TM 55-1500-345-23

TECHNICAL MANUAL

PAINTING AND MARKING OF ARMY AIRCRAFT

This publication supersedes TB 746-93-2 10 August 1978, including all changes

HEADQUARTERS DEPARTMENT OF THE ARMY

12 JUNE 1986

WARNING

An operating procedure, practice, etc., which, if not correctly followed, could result in personnel injury or loss of life.

CAUTION

An operating procedure, practice, etc., which, if not strictly observed, could result in damage to or destruction of equipment.

NOTE

An operating procedure, condition etc., which it is essential to highlight.

WARNING

PRECAUTIONARY DATA

Personnel performing instructions involving operations, procedures, and practices which are included or implied in this technical manual shall observe the following instructions. Disregard of these warnings and precautionary information can cause serious injury, death or an aborted mission.

WARNING

USING SOLVENT/PAINTS

Standard precautions such as .re prevention and adequate ventilation shall be exercised when using solvents or applying primer and coating.

WARNING

ELECTRICAL WIRING

Disconnect all electrical wiring before removing any part of aircraft.

WARNING

ACETONE, ASTM-D329

Acetone is extremely flammable an toxic to eyes, skin, and respiratory tract. Wear protective gloves and goggles/face shield. Avoid repeated or prolonged contact. Use only in well ventilated areas (or use approved respirator as determined by local safety/industrial hygiene personnel). Keep away from open flames, sparks, hot surfaces or other sources of ignition.

WARNING

ALIPHATIC NAPHTHA, TT-N-95

Aliphatic Naphtha is extremely flammable an toxic to eyes, skin, and respiratory tract. Wear protective gloves and goggles/face shield. Avoid repeated or prolonged contact. Use only in well ventilated areas (or use approved respirator as determined by local safety/industrial hygiene personnel). Keep away from open flames, sparks, hot surfaces or other sources of ignition.

CHANGE

NO. 12

HEADQUATERS
DEPARTMENT OF THE ARMY
WASHINGTON, D.C.,10 January 2011

PAINTING AND MARKING OF ARMY AIRCRAFT

DISTRIBUTION STATEMENT A: Approved for public release; distribution is unlimited.

TM 55-1500-345-23, dated 12 June 1986, is changed as follows:

1. Remove and insert pages as indicated below. New or changed text material is indicated by a vertical bar in the margin. An illustration change is indicated by a miniature pointing hand.

Remove Pages	Insert Pages
a/(b Blank)	a/(b blank)
A through C/(D blank)	A and B
i and iv	i and iv
1-1 through 1-3/(1-4 blank)	1-1 through 1-3/(1-4 blank)
2-3 and 2-4	2-3 and 2-4
3-3 through 3-18	3-3 through 3-18
3-29/(3-30 blank)	3-29/(3-30 blank)
4-1 through 4-6	4-1 through 4-6
5-1 through 5-4	5-1 through 5-4
6-1 through 6-14	6-1 through 6-14
6-14.1 and 6-14.2	6-14.1 and 6-14.2
6-15 through 6-22	6-15 through 6-22
7-1 through 7-4	7-1 through 7-4
7-7 and 7-8	7-7 and 7-8
7-11 and 7-12	7-11 and 7-12
8-1 through 8-8	8-1 through 8-8
8-17 through 8-20	8-17 through 8-20
9-1 through 9-12	9-1/(9-2 blank)
9-13 and 9-14	9-13 and 9-14
9-30.1 and 9-30.2	9-30.1 and 9-30.2
9-31 through 9-34	9-31 through 9-34
9-43 and 9-44	9-43 and 9-44
9-47 through 9-50	9-47 through 9-50
9-55 and 9-58	9-55 and 9-58
9-67 and 9-68	9-67 and 9-68
9-71 through 9-86	9-71 through 9-85/(9-86 blank)
9-87 through 9-100	- - - - -
9-101 and 9-102	9-101/(9-102 blank)
9-103 to 9-108	- - - - -
9-109 and 9-110	9-109 and 9-110
9-115 through 9-124	9-115 through 9-124
9-127 and 9-128	9-127 and 9-128
9-129 through 9-176	- - - - -
9-176.1/(9-176.2 blank)	- - - - -
9-177 through 9-180	9-177 through 9-180
9-185 through 9-192	9-185 through 9-192
9-195 through 9-200	9-195 through 9-200
9-200.1 and 9-200.2	9-200.1 and 9-200.2
10-1 and 10-2	10-1 and 10-2
10-23 and 10-24	10-23 and 10-24
10-25 through 10-54	10-31/(10-32 blank)
10-55 through 10-64	10-55/(10-56 blank)

Remove Pages	Insert Pages
10-65 and 10-66	10-65/(10-66 blank)
10-67 through 10-76	10-67/(10-68 blank)
10-77 through 10-88	10-77/(10-78 blank)
10-89 through 10-92	10-89 through 10-92
10-95 and 10-96	10-95 and 10-96

2. Retain this sheet in front of manual for reference purposes.

By Order of the Secretary of the Army:

GEORGE W. CASEY, JR.
General, United States Army
Chief of Staff

Official:

JOYCE E. MORROW
Administrative Assistant to the
Secretary of the Army
1032708

Distribution:

To be distributed in accordance with the initial distribution number (IDN) 311338 requirements for TM 55-1500-345-23.

CHANGE

NO. 11

HEADQUARTERS
DEPARTMENT OF THE ARMY
WASHINGTON, D.C., 9 February 2006

PAINTING AND MARKING OF ARMY AIRCRAFT

DISTRIBUTION STATEMENT A: Approved for public release; distribution is unlimited.

TM 55-1500-345-23, dated 12 June 1986, is changed as follows:

1. Remove and insert pages as indicated below. New or changed text material is indicated by a vertical bar in the margin. An illustration change is indicated by a miniature pointin g hand.

Remove Pages	Insert Pages
a/(b blank)	a/(b blank)
A through C/(D blank)	A through C/(D blank)
i and ii	i and ii
2-7 and 2-8	2-7/(2-8 blank)
3-15 through 3-18	3-15 through 3-18
8-1 through 8-8.1/(8-8.2 blank)	8-1 through 8-8
9-53 and 9-54	9-53 and 9-54
9-67 through 9-84	9-67 through 9-84
10-63/(10-64 blank)	10-63/(10-64 blank)

2. Retain this sheet in front of manual for reference purposes.

By Order of the Secretary of the Army:

PETER J. SCHOOMAKER
General, United States Army
Chief of Staff

Official:

SANDRA R. RILEY
Administrative Assistant to the
Secretary of the Army
0602304

DISTRIBUTION:
To be distributed in accordance with Initial Distribution Number (IDN) 311338 requirements for TM 55-1500-345-23.

CHANGE

NO. 10

HEADQUARTERS
DEPARTMENT OF THE ARMY
WASHINGTON, D.C., 26 JANUARY 2004

PAINTING AND MARKING OF ARMY AIRCRAFT

DISTRIBUTION STATEMENT A: Approved for public release; distribution is unlimited.

TM 55-1500-345-23, dated 12 June 1986 , is changed as follows:

1. Remove and insert pages as indicated below. New or changed text material is indicated by a vertical bar in the margin. An illustration change is indicated by a miniature pointing hand.

Remove pages	Insert pages
A through C/(D blank)	A through C/(D blank)
1-1 and 1-2	1-1 and 1-2
2-7 and 2-8	2-7 and 2-8
4-3 and 4-4	4-3 and 4-4
(10-55 blank)/10-56	10-55/(10-56 blank)
10-57 through 10-62	------
10-63 through 10-66	10-63/(10-64 blank)

2. Retain this sheet in front of manual for reference purposes.

By Order of the Secretary of the Army:

Official:

PETER J. SCHOOMAKER
General, United States Army
Chief of Staff

JOEL B. HUDSON
Administrative Assistant to the
Secretary of the Army
0334403

DISTRIBUTION:
To be distributed in accordance with Initial Distribution Number (IDN) 311338, requirements for TM 55-1500-345-23.

CHANGE

NO. 9

HEADQUARTERS
DEPARTMENT OF THE ARMY
WASHINGTON, DC 19 July 2002

PAINTING AND MARKING OF ARMY AIRCRAFT

DISTRIBUTION STATEMENT A: Approved for public release; distribution is unlimited.

TM 55-1500-345-23, 12 June 1986, is changed as follows:

1. Remove and insert pages as indicated below. New or changed text material is indicated by a vertical bar in the margin. An illustration change is indicated by a miniature pointing hand.

Remove Pages	Insert Pages
a/(b blank)	a/(b blank)
	A through C/(D blank)
v through xi/(xii blank)	v through xi/(xii blank)
1-1 and 1-2	1-1 and 1-2
3-15 and 3-16	3-15 and 3-16
6-5 through 6-12	6-5 through 6-12
7-1 through 7-4	7-1 through 7-4
7-5 through 7-10	7-6 through 7-10
8-1 and 8-2	8-1 and 8-2
8-29 through 8-30	8-29 through 8-30
8-31 through 8-36	8-31 through 8-36
9-175 and 9-176	9-175 and 9-176
9-181 and 9-182	9-181 and 9-182
9-200.1 and 9-200.2	9-200.1 and 9-200.2
10-1 through 10-54	10-1 through 10-25
10-55 and 10-56	(10-55 blank)/10-56
10-65 through 10-88	10-65 through 10-66

2. Retain this sheet in front of manual for reference purposes.

By Order of the Secretary of the Army:

Official:

ERIC K. SHINSEKI
General, United States Army
Chief of Staff

JOEL B. HUDSON
Administrative Assistant to the
Secretary of the Army
0212807

DISTRIBUTION:
To be distributed in accordance with Initial Distribution Number (IDN) 311338, requirements for TM 55-1500-0345-23.

CHANGE

NO. 8

HEADQUARTERS
DEPARTMENT OF THE ARMY
WASHINGTON, DC 30 December 1998

PAINTING AND MARKING OF ARMY AIRCRAFT

DISTRIBUTION STATEMENT A: Approved for public release; distribution is unlimited.

TM 55-1500-345-23, 12 June 1986, is changed as follows:

1. Remove and insert pages as indicated below. New or changed text material is indicated by a vertical bar in the margin. An illustration change is indicated by a miniature pointing hand.

Remove Pages	Insert Pages
a/(b blank)	a/(b blank)
i and ii	i and ii
2-1 and 2-2	2-1 and 2-2
2-5 through 2-8	2-5 through 2-8
3-15 through 3-18	3-15 through 3-18
3-29/(3-30 blank)	3-29/(3-30 blank)
4-3 and 4-4	4-3 and 4-4
6-1 and 6-2	6-1 and 6-2
6-13 and 6-14	6-13 and 6-14
6-17 and 6-18	6-17 and 6-18
8-5 through 8-8	8-5 through 8-8
9-7 and 9-8	9-7 and 9-8
9-111 and 9-112	9-111 and 9-112
9-123 and 9-124	9-123 and 9-124
9-161 through 9-176	9-161 through 9-176
	9-176.1/(9-176.2 blank)

2. Retain this sheet in front of manual for reference purposes.

By Order of the Secretary of the Army:

By Order Of the Secretary of the Army:

DENNIS J. REIMER
General, United States Army
Chief of Staff

Official:

JOEL B. HUDSON
Administrative Assistant to the
Secretary of the Army
05283

DISTRIBUTION: To be distributed in accordance with Initial Distribution No. (IDN) 311338, requirements for TM 55-1500-345-23.

CHANGE

NO.7

HEADQUARTERS,
DEPARTMENT OF THE ARMY
WASHINGTON, D.C., 20 September 1996

PAINTING AND MARKING
OF ARMY AIRCRAFT

DISTRIBUTION STATEMENT A: Approved for public release; distribution is unlimited.

TM 55150034523, 12 June 1986, is changed as follows:

1. Remove and insert pages as indicated below. New or changed text material is indicated by a vertical bar in the margin. An illustration change is indicated by a miniature pointing hand.

Remove pages	Insert pages
i and ii	i and ii
1-1 and 1-2	1-1 and 1-2
2-1 and 2-2	2-1 and 2-2
3-3 and 3-4	3-3 and 3-4
---------	3-29/(3-30 blank)
8-1 and 8-2	8-1 and 8-2
9-21 and 9-22	9-21 and 9-22
9-29 and 9-30	9-29 and 9-30
----------	9-30.1/(9-30.2 blank)
9-31 and 9-32	9-31 and 9-32
9-32.1/(9-32.2 blank)	----------
9-115 and 9-116	9-115 and 9-116
9-119 and 9-120	9-119 and 9-120
9-163 and 9-164	9-163 and 9-164
9-185 through 9-192	9-185 through 9-192
9-197 through 9-200.2	9-197 through 9-200.2

2. Retain this sheet in front of manual for reference purposes.

By Order of the Secretary of the Army:

DENNIS J. REIMER
General, United States Army
Chief of Staff

Official:

JOELB.HUDSON
Administrative Assistant to the
Secretary of the Army
02988

DISTRIBUTION:
To be distributed in accordance with DA Form 1231E, block no. 1338, requirements for TM 551500-345-23.

CHANGE

NO. 6

HEADQUARTERS,
DEPARTMENTS OF THE ARMY
WASHINGTON, D.C., 28 February 1995

PAINTING AND MARKING OF ARMY AIRCRAFT

DISTRIBUTION STATEMENT A: Approved for public release; distribution is unlimited

TM 55-1500-345-23, 12 June 1986, is changed as follows:

1. Remove and insert pages as indicated below. New or changed text material is indicated by a vertical bar in the margin. An illustration change is indicated by a miniature pointing hand.

Remove pages	Insert pages
i and ii	i and ii
3-3 and 3-4	3-3 and 3-4
3-17 and 3-18	3-17 and 3-18
6-3 and 6-4	6-3 and 6-4
6-13 and 6-14	6-13 and 6-14
8-7 and 8-8	8-7 and 8-8
9-3 and 9-4	9-3 and 9-4
9-9 and 9-10	9-9 and 9-10
9-13 through 9-30	9-13 through 9-30
- - - - - - - - - - - -	9-30.1/(9-30.2 blank)
9-31 and 9-32	9-31 and 9-32
9-191 and 9-192	9-191 and 9-192
9-189 and 9-200	9-199 and 9-200

2. Retain this sheet in front of manual for reference purposes.

By Order of the Secretary of the Army:

GORDON R. SULLIVAN
General, United States Army
Chief of Staff

Official:

MILTON H. HAMILTON
Administrative Assistant to the
Secretary of the Army

DISTRIBUTION:

To be distributed in accordance with DA Form 12-25-E, block no. 1338, requirements for TM 55-1500-345-23.

CHANGE

NO. 5

HEADQUARTERS
DEPARTMENT OF THE ARMY
WASHINGTON, D.C., 4 April 1994

PAINTING AND MARKING OF ARMY AIRCRAFT

DISTRIBUTION STATEMENT A: Approved for public release; distribution is unlimited.

TM 55-1500-345-23,12 June 1986, is changed as follows

1. Remove and insert pages as indicated below. New or changed text material is indicated by a vertical bar in the margin. An illustration change is indicated by a miniature pointing hand.

Remove pages	Insert pages
i and ii	i and ii
ix and x	ix and x
1-1 and 1-2	1-1 and 1-2
6-17 and 6-18	6-17 and 6-18
7-11 and 7-12	7-11 and 7-12
7-19 and 7-20	7-19 and 7-20
- - - - - - - - - - - -	7-29/(7-30 blank)
9-1 through 9-12	9-1 through 9-12
9-15 and 9-16	9-15 and 9-16
9-27 and 9-28	9-27 and 9-28
9-31 and 9-32	9-31 and 9-32
9-67 and 9-68	9-67 and 9-68
9-71 through 9-80	9-71 through 9-80
9-103 through 9-106	9-103 through 9-106
9-111 through 9-124	9-111 through 9-124
9-137 through 9-142	9-137 through 9-142
9-157 through 9-164	9-157 through 9-164
9-167 through 9-176	9-167 through 9-176
9-181 through 9-200	9-181 through 9-200
------- ------- --	9-200.1 and 9-200.2
10-23 and 10-24	10-23 and 10-24
10-49 and 10-50	10-49 and 10-50
10-61 and 10-62	10-61 and 10-62
10-65 and 10-66	10-65 and 10-66
10-87 and 10-88	10-87 and 10-88
10-111 and 10-112	10-111 and 10-112

2. Retain this sheet in front of manual for reference purposes.

By Order of the Secretary of the Army:

GORDON R. SULLIVAN
General, United States *Army*
Chief of Staff

Official:

MILTON H. HAMILTON
Administrative Assistant to the
Secretary of the Army
06573

DISTRIBUTION:
To be distributed in accordance with DA Form 12-25-E, block no. 1338, requirements for TM 55-1500-345-23.

CHANGE

NO. 4

HEADQUARTERS
DEPARTMENT OF THE ARMY
WASHINGTON, D.C., 28 February 1991

PAINTING AND MARKING
OF ARMY AIRCRAFT

TM 55-1500-345-23, 12 June 1986, is changed as follows:

1. Remove and insert pages as indicated below. New or changed text material is indicated by a vertical bar in the margin. An illustration change is indicated by a miniature pointing hand.

Remove pages	Insert pages
i through iv	i through iv
2-1 through 2-8	2-1 through 2-8
3-1 through 3-4	3-1 through 3-4
5-3 and 5-4	5-3 and 5-4
6-1 and 6-2	6-1 and 6-2
6-7 through 6-10	6-7 through 6-10
6-13 and 6-14	6-13 and 6-14
6-14.1/6-14.2	6-14.1 and 6-14.2
6-15 and 6-16	6-15 and 6-16
7-9 and 7-10	7-9 and 7-10
8-1 and 8-2	8-1 and 8-2
9-111 and 9-112	9-111 and 9-112
9-115 and 9-116	9-115 and 9-116
9-121 through 9-124	9-121 through 9-124
9-131 through 9-134	9-131 through 9-134
9-159 and 9-160	9-159 and 9-160
9-167 and 9-168	9-167 and 9-168
9-171 and 9-172	9-171 and 9-172
9-177 through 9-180	9-177 through 9-180
2028's and Envelopes	2028's and Envelopes

2. Retain this sheet in front of manual for reference purposes.

By Order of theSecretary of the Army:

CARL E. VUONO
General, UnitedStates Army
Chief of Staff

Official:

THOMAS F. SIKORA
Brigadier General, United States Army
The Adjutant General

DISTRIBUTION:
To be distributed in accordance with DA Form 12-31-E, block no. 1338, AVUM and AVIM maintenance requirements for TM 55-1500-345-23.

Change NO. 3

HEADQUARTERS
DEPARTMENT OF THE ARMY
WASHINGTON, D.C., 09 November 1989

PAINTING AND MARKING
OF ARMY AIRCRAFT

TM 55-1500-345-23, 12 June 1986 is changed as follows:

1. Remove and insert pages as indicated below. New or changed text material is indicated by a vertical bar in the margin. An illustration change is indicated by a miniature pointing hand.

Remove pages	Insert pages
7-7 and 7-8	7-7 and 7-8
7-15 through 7-20	7-15 through 7-20
7-27 and 7-28	7-27/7-28
8-7 and 8-8	8-7 and 8-8
9-171 and 9-172	9-171 and 9-172

2. Retain this sheet in front of manual for reference purposes.

By Order of theSecretary of the Army:

CARL E. VUONO
General, United States Army
CbiefofStaff

Official:

WILLIAM J. MEEHAN II
Brigadier General, United States Army
The Adjutant General

DISTRIBUTION:
To be distributed in accordance with DA Form 12-31, AVUM and AVIM Maintenance requirements for All Fixed and Rotary Wing Aircraft.

Change NO. 2

HEADQUARTERS
DEPARTMENT OF THE ARMY
WASHINGTON, D.C., 14 August 1989

PAINTING AND MARKING
OF ARMY AIRCRAFT

TM 55-1500-345-23, 12 June 1986 is changed as follows:

1. Remove and insert pages as indicated below. New or changed text material is indicated by a vertical bar in the margin. An illustration change is indicated by a miniature pointing hand.

Remove pages	Insert pages
1-1 and 1-2	1-1 and 1-2
2-3 and 2-4	2-3 and 2-4
5-1 and 5-2	5-1 and 5-2
6-13 and 6-14	6-13 and 6-14
- - -	6-14.1/6-14.2
6-19 and 6-20	6-19 and 6-20
7-1 and 7-2	7-1 and 7-2
8-1 and 8-2	8-1 and 8-2
8-3 and 8-4	8-3 and 8-4
9-129 and 9-130	9-129 and 9-130
9-161 through 9-164	9-161 through 9-164
9-171 and 9-172	9-171 and 9-172
9-193 and 9-194	9-193 and 9-194

2. Retain this sheet in front of manual for reference purposes.

By Order of the Secretary of the Army:

CARL E. VUONO
General, United States Army
Chief of Staff

Official:

WILLIAMJ.MEEHAN II
Brigadier General, United States Army
The Adjutant General

DISTRIBUTION:
To be distributed in accordance with DA Form 12-31, AVUM and AVIM Maintenance requirements for All Fixed and Rotary Wing Aircraft.

CHANGE

NO. 1

HEADQUARTERS
DEPARTMENT OF THE ARMY
WASHINGTON, D.C., 1 July 1988

PAINTING AND MARKING OF ARMY AIRCRAFT

TM 55-1500-345-23, 12 June 1986 is changed as follows:

1. Remove and insert pages as indicated below. New or changed text material is indicated by a vertical bar in the margin. An illustration change is indicated by a miniature pointing hand.

Remove pages	Insert pages
a/b	a/b
i and ii	i and ii
v through x	v through x
xi/xii	xi/xii
1-1 and 1-2	1-1 and 1-2
1-3/1-4	1-3/1-4
2-7 and 2-8	2-7 and 2-8
3-1 through 3-4	3-1 through 3-4
- - -	3-4.1/3-4.2
3-5 through 3-8	3-5 through 3-8
3-13 through 3-16	3-13 through 3-16
4-1 and 4-2	4-1 and 4-2
5-3 and 5-4	5-3 and 5-4
6-1 and 6-2	6-1 and 6-2
6-13 through 6-16	6-13 through 6-16
6-19 through 6-22	6-19 through 6-22
- - -	6-22.1/6-22.2
7-1 through 7-4	7-1 through 7-4
7-7 through 7-28	7-7 through 7-28
8-5 through 8-8	8-5 through 8-8
- - -	8-8.1/8-8.2
8-23 and 8-24	8-23 and 8-24
- - -	8-24.1/8-24.2
8-25 and 8-26	8-25 and 8-26
9-1 through 9-8	9-1 through 9-8
9-11 through 9-14	9-11 through 9-14
9-25 and 9-26	9-25 and 9-26
9-33 and 9-34	9-33 and 9-34
9-67 and 9-68	9-67 and 9-68
9-85 and 9-86	9-85 and 9-86

Remove pages	Insert pages
9-101 and 9-102	9-101 and 9-102
9-109 through 9-112	9-109 through 9-112
9-115 through 9-122	9-115 through 9-122
9-127 through 9-148	9-127 through 9-148
9-153 through 9-172	9-153 through 9-172
9-175 through 9-180	9-175 through 9-180
9-185 and 9-186	9-185 and 9-186
9-195 and 9-196	9-195 and 9-196
10-23 and 10-24	10-23 and 10-24
10-39 and 10-40	10-39 and 10-40
10-83 and 10-84	10-83 and 10-84
10-111 and 10-112	10-111 and 10-112

2. Retain these sheets in front of manual for reference purposes.

By Order of the Secretary of the Army:

CARL E. VUONO
General, United States Army
Chief of Staff

Official:

WILLIAM J. MEEHAN II
Brigadier General, United States Army
The Adjutant General

DISTRIBUTION:
To be distributed in accordance with DA Form 12-31-R, AVUM and AVIM requirements for All Fixed and Rotary Wing Aircraft.

LIST OF EFFECTIVE PAGES/WORK PACKAGES

NOTE: The portion of text affected by the changes is indicated by a vertical line in the outer margins of the page. Changes to illustrations are indicated by miniature pointing hands. Changes to wiring diagrams are indicated by shaded areas.

Date of issue for the original manual is:

Original ..... 12 June 1986
Change 1 ..... 1 July 1988
Change 2 ..... 14 August 1989
Change 3 ..... 9 November 1989
Change 4 ..... 28 February 1991
Change 5 ..... 4 April 1994
Change 6 ..... 28 February 1995
Change 7 ..... 20 September 1996
Change 8 ..... 30 December 1998
Change 9 ..... 19 July 2002
Change 10 ..... 26 January 2004
Change 11 ..... 9 February 2006
Change 12 ..... 10 January 2011

TOTAL NUMBER OF PAGES FOR FRONT AND REAR MATTER IS 18 AND TOTAL NUMBER OF WORK PACKAGES IS 37 CONSISTING OF THE FOLLOWING:

Page/WP No.	*Change No.
Cover	0
Blank	0
a	12
b blank	12
A and B	12
C Deleted	12
D blank Deleted	12
i thru iv	12
v through xi Deleted	12
xii blank Deleted	12
1-1 through 1-3	12
1-4 blank	12
2-1	7
2-2	8
2-3 and 2-4	12
2-5 and 2-6	8
2-7	11
2-8 blank	11
3-1	0
3-2	4
3-3	0
3-4	12
3-4.1	1
3-4.2 blank	1
3-5 and 3-6	12
3-7	1
3-8 and 3-9	12
3-10	0
3-11 through 3-17	12
3-18 through 3-27	0
3-28 blank	0
3-29	12
3-30 blank	12
4-1 through 4-6	12
5-1	2
5-2 and 5-3	12
5-4	0
6-1 through 6-13	12
6-14	8
6-14.1	12
6-14.2	4
6-15 through 6-19	12
6-20	0
6-21 and 6-22	12
6-22.1	1
6-22.2 blank	1
6-23	0
6-24 blank	0
7-1	12
7-2	9
7-3 and 7-4	12
7-5 blank	9
7-6	9
7-7 and 7-8	12
7-9	9
7-10	0
7-11	1
7-12	12
7-13	0
7-14 and 7-15	1
7-16	3
7-17	1
7-18	3
7-19	5
7-20 through 7-26	1
7-27	3
7-28 blank Deleted	3
7-29	5
7-30 blank	5

LIST OF EFFECTIVE PAGES /WORK PACKAGES (CON'T)

Page/WP No.	*Change No.
8-1	12
8-2 and 8-3	11
8-4 and 8-5	12
8-6	11
8-7	12
8-8	11
8-9 through 8-16	0
8-17	12
8-18	0
8-19	12
8-20 through 8-22	0
8-23 and 8-24	1
8-24.1	1
8-24.2 blank	1
8-25 and 8-26	1
8-27 through 8-29	0
8-30 and 8-31	9
8-32 blank	9
8-33 and 8-34	9
8-35	9
8-36	0
9-1	12
9-2 blank Deleted	12
9-3 through 9-12 Deleted	12
9-13	12
9-14 through 9-21	6
9-22	7
9-23 through 9-29	6
9-30	7
9-30.1 and 9-30.2	12
9-31	12
9-32	0
9-33 and 9-34	12
9-35 through 9-42	0
9-43 and 9-44	12
9-45 through 9-47	0
9-48 and 9-49	12
9-50 through 9-52	0
9-53	1
9-54	11
9-55 through 9-58	12
9-59 through 9-66	0
9-67 and 9-68	12
9-69 through 9-71	11
9-72 through 9-83	12
9-84	0
9-85	12
9-86 blank	12
9-87 through 9-100 Deleted	12
9-101	12
9-102 blank	12
9-103 through 9-108 Deleted	12
9-109 and 9-110	12
9-111	5
9-112	8
9-113 and 9-114	5
9-115	0
9-116	12
9-117	5
9-118 and 9-119	12
9-120	5
9-121	12
9-122	5
9-123	12
9-124 through 9-126	0
9-127 and 9-128	12
9-129 through 9-176 Deleted	12
9-177 through 9-179	12
9-180	1
9-181	5
9-182	9
9-183	5
9-184	0
9-185 and 9-186	12
9-187	7
9-188 and 9-189	12
9-190	7
9-191	5
9-192	12
9-193 through 9-195	5
9-196 through 9-200	12
9-200.1	5
9-200.2	12
9-201	0
9-202 blank	0
10-1	12
10-2 through 10-23	9
10-24	12
10-25 through 10-30 Deleted	12
10-31	12
10-32 blank	12
10-33 through 10-54 Deleted	12
10-55	12
10-56 blank	12
10-57 through 10-64 Deleted	10
10-65	12
10-66 blank	12
10-67	12
10-68 blank	12
10-69 through 10-76 Deleted	12
10-77	12
10-78 blank	12
10-79 through 10-88 Deleted	10
10-89	12
10-90	0
10-91	12
10-92 through 10-94	0
10-95	12
10-96 through 10-115	0
10-116 blank	0

TECHNICAL MANUAL

No. 55-1500-345-23

HEADQUARTERS
DEPARTMENT OF THE ARMY
WASHINGTON, D.C., 12 JUNE 1986

PAINTING AND MARKING OF ARMY AIRCRAFT

REPORTING ERRORS AND RECOMMENDING IMPROVEMENTS

You can improve this manual. If you .nd mistakes, or if you know of a way to improve these procedures, please let us know. Mail your letter or DA Form 2028 (Recommended Changes to Publications and Blank Forms) located in the back of this manual, directly to: Commander, U.S. Army Aviation and Missile Command, ATTN: AMSAM-MMA-NP, Redstone Arsenal, AL 35898-5000. A reply will be furnished to you. You may also provide DA Form 2028 information to AMCOM via e-mail, fax, or the World Wide Web. Our fax number is DSN 788-6546 or Commercial (256) 842-6546. Our e-mail address is: 2028@redstone.army.mil. Instructions for sending an electronic 2028 may be found at the back of this manual immediately preceding the hard copy 2028. For the World Wide Web use: https://amcom2028.redstone.army.mil.

OZONE DEPLETING CHEMICALS INFORMATION

This document has been reviewed for the presence of Class I Ozone Depleting Chemicals by the AMCOM G-4 (Logistics) Environmental Division. As of the base document through Change 10, dated 26 January 2004, all references to Class I Ozone Depleting Chemicals have been removed from this document by substitution with chemicals that do not cause atmospheric ozone depletion.

HAZARDOUS MATERIAL INFORMATION

This document has been reviewed for the presence of SOLVENTS containing hazardous materials as defined by the EPCRA 302 and 313 lists by the AMCOM G-4 (Logistics) Environmental Division. As of the base through Change 10, dated 26 January 2004, all references to Solvents containing hazardous materials have been removed from this document by substitution with non-hazardous or less hazardous materials where possible.

TABLE OF CONTENTS

		Page
CHAPTER 1	GENERAL	1-1
Section I	PURPOSE AND SCOPE	1-1
Section I	RESPONSIBILITIES	1-1
Section II	AUTHORIZED PAINT SCHEMES	1-2
CHAPTER 2	SURFACE PREPARATION	2-1
Section I	CLEANING	2-1
Section II	STRIPPING	2-1
Section III	METAL CONDITIONING	2-7
CHAPTER 3	PAINTING: GENERAL	3-1
Section I	PAINTING TECHNIQUES	3-1
Section II	PRIMERS	3-14
Section III	FINISH PAINTING: GENERAL	3-16
CHAPTER 4	TACTICAL PAINT SCHEME	4-1
Section I	HELICOPTERS	4-1
Section II	FIXED WING AIRCRAFT	4-3
Section III	MARKINGS	4-4
Section IV	PROPELLER ASSEMBLIES AND BLADES	4-4
Section V	AIRCRAFT COMPONENTS	4-4
Section VI	APPLICATION TO PREVIOUSLY PAINTED SURFACES (ROTARY AND FIXED WING)	4-4
CHAPTER 5	NON-TACTICAL PAINT SCHEMES	5-1
Section I	GENERAL	5-1
Section II	SPECIFIC	5-2
CHAPTER 6	FINISHES FOR SPECIFIC APPLICATIONS: GENERAL	6-1
Section I	GENERAL	6-1
Section II	PROPELLER ASSEMBLIES AND ROTOR BLADES	6-2

* This publication supersedes TB 746-93-2 10 August 1978, including all changes

TABLE OF CONTENTS (Cont)

		Page
Section I	GENERAL	6-1
Section II	PROPELLER ASSEMBLIES AND ROTOR BLADES	6-2
Section III	AIRCRAFT EXTERIOR LANDING GEAR AND WHEELS	6-5
Section IV	WALKWAY COATINGS	6-5
Section V	INTERIOR PAINTING	6-14.1
Section VI	PROTECTIVE COATINGS	6-20
CHAPTER 7	LETTERING AND MARKING	7-1
Section I	MARKINGS	7-1
Section II	INSIGNIA: GENERAL	7-1
Section III	MEDICAL INSIGNIA	7-3
Section IV	COMMAND AND ORGANIZATIONAL INSIGNIA AND NAME	7-4
Section V	IDENTIFICATION LETTERING	7-5
Section VI	WARNING STRIPES AND SIGNS	7-7
Section VII	RADIO CALL NUMBERS AND PREFIXES	7-9
Section VIII	SERIAL NUMBER AND FUEL SPECIFICATION	7-10
Section IX	MARKINGS FOR EMERGENCY ENTRY OR EXIT	7-11
Section X	MISCELLANEOUS MARKINGS	7-12
Section XI	MARKING OF INSTRUMENTS	7-17
CHAPTER 8	MISCELLANEOUS TABLES AND ILLUSTRATIONS	8-1
CHAPTER 9	HELICOPTER ILLUSTRATIONS	9-1
Section I	DELETED	9-1
Section II	AH-64 Illustrations	9-13
Section III	CH-47 Illustrations	9-33
Section IV	DELETED	9-85
Section V	DELETED	9-101
Section VI	OH-58 ILLUSTRATIONS	9-109
Section VII	DELETED	9-127
Section VIII	DELETED	9-128
Section IX	UH-60 ILLUSTRATIONS	9-178
CHAPTER 10	FIXED WING AIRCRAFT ILLUSTRATIONS	10-1
Section I	GENERAL	10-1
Section II	C12 and RC-12 Illustrations	10-2
Section III	DELETED	10-31
Section IV	DELETED	10-55
Section V	DELETED	10-65
Section VI	DELETED	10-67
Section VII	DELETED	10-77
Section VIII	U-21 and RU-21 ILLUSTRATIONS	10-89

LIST OF ILLUSTRATIONS

Figure	Title	Page
1-1	or Identi.er Symbol	1-3
3-1	Right and Methods of Spraying	3-9
3-2	Cross-Coating	3-10
3-3	Fifty Percent Overlap	3-10
3-4	Setting Spray Pattern.	3-12
3-5	Faulty Patterns and Suggested Corrections	3-14
3-6	Excessive Spray Fog	3-24
3-7	Paint Leaks From Spray Gun	3-24
3-8	Gun Sputters Constantly	3-24

LIST OF ILLUSTRATIONS (Cont)

Figure	Title	Page
3-9	Orange Peel	3-25
3-10	Sandpaper Finish	3-25
3-11	Wrinkling	3-25
3-12	Crazing	3-26
3-13	Checking	3-26
3-14	Blistering	3-26
3-15	Fish-Eyes and Poor Wetting, Crawling, Poor Flowout	3-27
3-16	Lifting	3-27
3-17	Pitting or Cupping	3-27
7-1	Deleted	7-5
7-2	Size and Wording of Stencil	7-9
7-3	Sample Markings	7-17
7-4	Method of Marking	7-18
7-5	Mixture Control Quadrant	7-19
7-6	Typical Manifold Pressure Gage, Tachometer, Cylinder Head Temperature Gage, and Air Temperature Gage Markings.	7-21
7-7	Typical Coolant Temperature Gage and Torquemeter Markings	7-22
7-8	Typical Tachometer and Engine Exhaust Temperature Gage Markings	7-23
7-9	Typical Dual Tachometer Markings	7-24
7-10	Typical Oil Pressure Gage, Oil Temperature Gage, and Airspeed Indicator Markings	7-26
7-11	Typical Accelerometer, Hydraulic Pressure Gage, Deicer Gage, and Fuel Pressure Gage Markings.	7-27
7-12	Fuel Nozzle Ground Dimensions	7-29
8-1	National Star Insignia	8-20
8-2	Wing and Fuselage Marking (Typical)	8-22
8-3	NATO Marking Symbols	8-23
8-4	Sidedraft Paint Booths	8-27
8-5	Downdraft Paint Booths	8-28
8-6	Typical Compartment Markings	8-29
8-7	First Aid Kit	8-29
8-8	Optimum High Visibility Paint Scheme, Two Blade, Exposed Hub	8-30
8-9	Optimum High Visibility Paint Scheme, Two Blades, Helicopter Tail Rotor Only	8-31
8-11	Optimum High Visibility Paint Scheme, Three Blades, Exposed Hub	8-33
8-12	Optimum High Visibility Paint Scheme, Three Props With Spinner	8-34
8-13	Optimum High Visibility Paint Scheme, Four Props, Exposed Hub	8-35
8-14	Optimum High Visibility Paint Scheme, Four Blades, Helicopter Tail Rotor Only	8-36
9-4	Tactical Paint Scheme, AH-64	9-13
9-5	Exterior and Interior Markings, AH-64	9-14
9-6	Station Diagram, AH-64	9-32
9-7	Tactical Paint Scheme. CH-47	9-33
9-8	Non-Tactical Arctic/Desert Paint Scheme, CH-47	9-34
9-9	Interior Markings, CH-47	9-35
9-10	Exterior Markings, CH-47	9-55
9-11	Station Diagram, CH-47.	9-84
9-21	Tactical Paint Scheme, OH-58	9-109
9-22	Non-Tactical Arctic/Desert Paint Scheme, OH-58	9-110
9-23	Interior and Exterior Markings, OH-58	9-111
9-24	Interior Requirements to be Stenciled on the Back of Pilot's and Co-Pilot's Seat Backs, OH-58A/C	9-124
9-25	Station Diagram, OH-58	9-126
9-39	Tactical Paint Scheme, UH-60	9-178
9-40	Non-Tactical Arctic/Desert Paint Scheme, UH-60	9-179
9-41	Army Medical Service (Ambulance), UH-60	9-180

LIST OF ILLUSTRATIONS (Cont)

Figure	Title	Page
9-42	Exterior and Interior Markings, UH-60	9-181
9-43	Station Locations, UH-60	9-201
10-1	Exterior Markings, C-12	10-2
10-2	Station Diagram, C-12	10-24
10-18	Tactical Paint Scheme, RU-21	10-89
10-19	Non-Tactical Paint Scheme, U-21	10-91
10-20	Non-Tactical, High Visibility Paint Scheme, U-21	10-95
10-21	Interior Markings, U-21 and RU-21	10-97
10-22	Exterior Markings, U-21 and RU-21	10-102
10-23	Station Diagram, U-21 and RU-21	10-25

LIST OF TABLES

Number	Title	Page
3-1	Manual Spray Coating Troubles, Possible Causes, and Remedies	3-18
6-1	Typical Aircraft Interior Areas To Be Painted	6-6
6-2	Typical Aircraft Interior Areas Not To Be Painted	6-9
8-1	Technical Manuals, Technical Bulletins, and AR's	8-1
8-2	Standards-American Society for Testing and Materials (ASTM) D1193-Reagent Water	8-1
8-3	Consumable Items List	8-2
8-4	State Abbreviations	8-8
8-5	Definitions of Common Painting Terms	8-9
8-6	Ventilation and Respirator Requirements for Application of Paints	8-16
8-7	Current Safety Guidelines for Application of MIL-DTL-64159 or MIL-DTL-53039B Paint	8-17
8-8	Recommended Respiratory Protection Guidelines for Spray Finishing Operations	8-18
8-9	Occupational Health Protection Requirements for Paint Spray Workers Using MIL-E-52798A Alkyd Enamel and MIL-DTL-64159 or MIL-DTL-53039B Polyurethane Coating	8-19

CHAPTER 1
GENERAL

SECTION I PURPOSE AND SCOPE

1-1. PURPOSE. This manual provides instructions and procedures for the painting and marking of all Army aircraft, including standard approved materials, application and maintenance of coatings, .nishing materials, special purpose coatings and markings, insignia, and identification markings.

NOTE

Paragraph 7-34 should be consulted prior to painting and marking of all aircraft, in order to assure compliance with NATO STANDARDIZATION AGREEMENT (STANAG) No. 3109 ABC AIR STD 5 1/2 AND STANAG 3230.

1-2. SCOPE. The paint schemes and materials prescribed by this TM are mandatory for all Army aircraft whether assigned for active service, storage, under procurement, or involved in research and development. This TM is applicable to all Army Reserve National Guard, and major Army field commands as defined in AR 10-5, Section III. Commencing Oct 85, "New procurements and those assets that require depot maintenance will include polyurethane (MIL-DTL-64159 or MIL-DTL-53039) and/or MIL-C-22750, Epoxy as noted in this publication."

1-3. RESTRICTIONS. Satisfactory protective coatings applied prior to the issuance of this TM will not be altered solely for the purpose of conformity to current painting and marking requirements. Complete painting will be accomplished only when the existing finish has been obsoleted or deteriorated to the extent that it fails to protect the underlying surfaces or the finish must be changed for policy reasons as authorized by higher authority.

1-4. DEVIATIONS. Deviations from the provisions of this technical manual must be approved by Department of the Army. Request for deviation or change will be supported by justification (such as safety, mission requirement, cost reductions etc.) and forwarded to U.S. Army Aviation and Missile Command ATTN: AMSAM-MMA-NP, Redstone Arsenal, AL 35898–5000. Wherever the instructions in this technical manual conflict with the instructions in the publications referenced herein, the instructions in this technical manual will be followed.

SECTION I RESPONSIBILITIES

1-5. ORGANIZATIONAL ACTIVITIES.

a. Aviation Unit Maintenance (AVUM). Responsible for surface preparation and minor touch-up (spot painting) of aircraft surfaces. Touch-up is defined as minor repainting of the painted aircraft surface, i.e., light scratches, chipping, crazing, small wear spots around doors, cowling, areas where there is heavy foot traffic, towing points, minor sheet metal repairs and necessary blending to improve appearance. Touch-up for coating, aliphatic polyurethane per MIL-DTL-64159 or MIL-DTL-53039 , see para 4-12; for lacquer, acrylic, per MIL-DTL-64159 or MIL-DTL-53039, see para 4-13.

b. Complete Repainting May be Done at Field and Sustainment Where OSHA Approved Facilities are Available. Responsible for repainting deteriorated aircraft painted surfaces that are beyond the capabilities authorized for AVUM. Repainting is defined as stripping paint down to the bare substrate, inspecting for corrosion, pretreatment for corrosion, priming and topcoating of large areas of aircraft painted surfaces. Repainting will only be done if equipment and facilities indicated in Chapter 3 are available.

c. Aircraft Components. Assemblies and components received in primed condition will be touched up with primer as necessary to repair damaged coating, prior to application of top coat, and will be finish-coated to match adjacent and interrelated structural surfaces. Internal airframe components within crewstations shall be painted with polyurethanes MIL-DTL-64159 water dispersible and MIL-DTL-53039 single component solvent based. Internal airframe components located in, or adjacent to, cargo compartments shall be painted polyurethanes MIL-DTL-64159 water dispersible and MIL-DTL-53039 single component solvent based. Internally installed components will be touched up or refinished using MIL-C-22750 or MIL-DTL-64159 or MIL-DTL-53039 with required colors. All external surfaces shall be painted per Chapter 9.

1-6. AVIATION DEPOT MAINTENANCE. Responsible for surface preparation and refinishing the entire aircraft. Refinishing is defined as stripping down the complete aircraft to bare substrate, inspecting for corrosion, pretreating for corrosion, priming and repainting to a like new condition. Depot level maintenance activities will also perform work assigned to lower echelons of maintenance.

1-7. INTERNATIONAL STANDARDIZATION. The aircraft marking provisions of this Technical Manual are subject to international standardization agreement (ABC AIR STD. 5 1/2, STANAG 3109, and STANAG 3230.) When amendments, revisions, or cancellation of this Technical Manual are proposed, the department custodians will inform their respective standardization offices so that appropriate action may be taken respecting the international agreement concerned.

SECTION II AUTHORIZED PAINT SCHEMES

1-8. GENERAL. The following aircraft may be completely repainted only with authority for deviation from AMSAT-I-MEA: Standard C (STD C) aircraft, Limited Standard (LS) aircraft, Obsolete (OBS) aircraft, aircraft designated Contingency Category (C and T), and aircraft used by the Army on loan from another agency. They will otherwise be maintained in their existing paint scheme by spot painting to prevent corrosion and deterioration. See paragraph 1-4 for deviations from the provisions of this technical manual.

1-9. TACTICAL AIRCRAFT PAINTING.

a. All Army aircraft, except those specifically exempted in paragraph 1-10, will be painted the tactical paint scheme as specified in Chapter 4.

b. All TOE/MTOE (Table(s) of Organization and Equipment/Modified Table(s) of Organization and Equipment) helicopters will be painted to the tactical paint scheme of aircraft green polyurethane per MIL-DTL-64159 or MIL-DTL-53039 applied with lusterless markings.

c. Army helicopters having a top coat of aircraft green acrylic lacquer applied per MIL-DTL-64159 or MIL-DTL-53039 will be converted to MIL-DTL-64159 or MIL-DTL-53039 Aircraft Green paint during commercial or organic aircraft overhaul. Aircraft may be painted on other occasions at the discretion of the major field commanders.

d. The tactical external topcoat for fixed wing aircraft will be aircraft gray with black markings. Material will conform to MIL-DTL-64159 or MIL-DTL-53039.

e. Crewstations and components within crewstations shall be finished Aircraft Black, #37038, per MIL-DTL-64159 or MIL-DTL-53039.

f. Aircraft cargo compartments of applicable aircraft should be painted interior Aircraft Gray, #36231, conforming to MIL-C-22750 or MIL-DTL-64159 or MIL-DTL-53039, except OH-58 aircraft shall be painted Aircraft Black.

g. Both pilot and gunner stations of AH-64 aircraft shall be Aircraft Black.

h. Internal components located in or adjacent to cargo compartment areas shall be finished to match internal airframe color.

i. All aircraft that have been painted or repainted with MIL-DTL-64159 or MIL-DTL-53039 should be marked with the polyurethane paint symbol as indicated in Figure 1-1. The date (month and year) and MIL-DTL-64159 or MIL-DTL-53039 designation shall be as shown. The paint scheme used shall be shown in the manner and location specified in paragraph 7-40. The polyurethane paint symbol shall be to the left of the air-frame. Aircraft components with insufficient surface to apply the symbol, will be marked on the surface of the component that would not normally be visable from outside the aircraft. With either chemical agent resistant coating polyurethane (CARC-P) or chemical agent resistant coating epoxy (CARC-E) using 1/4 inch lettering.

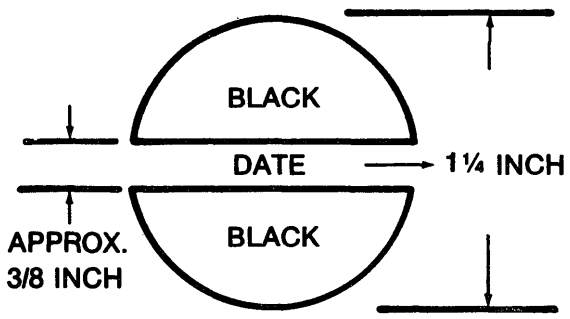

Figure 1-1. MIL-DTL-64159 or MIL-DTL-53039 Identi.er Symbol

1-10. EXCEPTIONS TO TACTICAL AIRCRAFT PAINTING.

a. Medical air ambulances will be painted in accordance with the instructions in Chapter 5.

b. TDA helicopters may be painted to the tactical paint scheme but retain high visibility/conspicuity markings described in Chapter 5. Aircraft in this category that are used for training purposes at Army aviation schools and other facilities may be banded with fluorescent paint or tape to ensure better daylight inflight visibility. Refer to Chapter 9.

c. Aircraft designated for a specific mission or assigned to certain geographic locations may be painted variations to the tactical paint of Chapter 4. See Chapter 5 for information clarifying these non-tactical paint schemes.

CHAPTER 2

SURFACE PREPARATION

Section I. CLEANING

2-1. GENERAL. In the process of preparing surfaces for stripping or painting, care should be taken that the surfaces are dean and free from dirt, grease, lint, water or other substances which may interfere with full contact with the surface. Conventional cleaning may be used in this process, as follows:

a Cleaning of surfaces, as covered by this paragraph is intended to remove traces of dust or contamination just prior to painting. For complete details on materials and surface cleaning preparatory to stripping, consult TM 1-1500-344-23.

b. Cleaning shall be accomplished with solvents, detergents and processes which have no degrading effect on the surfaces and which produce surfaces satisfactory for receiving subsequent processing. There are cleaning materials which are effective and suitable for some surface contaminants, e.g., grease and oils, and which are not suitable for others. More than one cleaning product may, therefore, be required to provide a waterbreak-free surface.

c. For conventional surface cleaning prior to metal treatment processing, primer or topcoat application, use the process cited in TM 1-1500-344-23.

NOTE

Acid cleaners or surface treatments other than those cited in TM 1-1500-344-23 or this publication shall not be utilized. These materials may cause hydrogen embrittlement to high strength steels and deteriorative effects on other alloys.

NOTE

Reclaimed paint thinner or other reclaimed thinners shall not be used for cleaning purposes. These materials may leave a grease film which will cause poor adhesion of the next coat or form a barrier which removers cannot effectively penetrate.

Section II. STRIPPING

2-2. GENERAL. The foremost considerations in removing organic coatings are that removal is complete to the bare metal, or polyamide primer, and that no damage occurs in the process to underlying surfaces. A variety of methods can remove coatings. In choosing one, a compromise must be made between maximum uncontrolled removal power and protection of equipment being stripped.

WARNING

Military Specification MIL-R-81294 may be used on aluminum or magnesium substrates. Military Specification MIL-H-81294 remover contains highly volatile methylene chloride as a constiuent. Its vapors are hazardous to breath and/or will cause skin burns. Although methylene chloride is not flammable, other constituents are. When the blanketing effect of methylene chloride is lost through its volatility, the remaining constituents may, under certain conditions, become ignitable. Any paint remover on the skin or in the eyes must be flushed immediately and copiously with water. In addition, medical treatment should be sought promptly in the case of contact with the eyes. Protective clothing and equipment such as rubber gloves, aprons, boots, approved organic vapor cartridge respirators (TB MED 502), appropriate eye shields and goggles shall be used as necessary to provide adequate protection for personnel.

The painting operation should be reviewed by the installation safety off ice and MEDDAC Health and Environment Activity to determine the presence of any operational hazards and to make recommendations for either eliminating or controlling those hazards found.

CAUTION

Care must be exercised when using any paint remover on fiberglass/plastics (e.g., antenna, access doors, fairings, canopies) surfaces to avoid damage. Spot tests must be accomplished, on inconspicuous surfaces to determine compatibility of any remover, and a remover selected which does not cause deterioration. Precautionary measures shall be taken to prevent paint and paint removal waste from contaminating lakes and streams. Some of the chemicals utilized for painting and paint removal require treatment or other special control prior to disposal. Disposal of materials shall be accomplished under the direction of the installation facility engineer and MEDDAC Health and Environment Activity in accordancewith applicable directive, and in a manner that will not result in violation of local, state and federal pollution criteria. Guidelines for disposal are cited in AR 200-1.

2-3. METHODS. The specific method for stripping existing paint to bare metal is determined by the accessibility of the area, judgement of the degree and type of corrosion and degree of flaking or peeling of paint. Stripping may be accomplished by:

a. Chemical Remover. See paragraphs 2-4, 2-6 and 2-7 below.

b. Mechanical Means. See paragraph 2-9 below.

2-4. SURFACES NOT TO BE CHEMICALLY STRIPPED.

NOTE

MIL-R-81924 will deteriorate most non-metallic structures. Non-metallic surfaces may be stripped with specific AMCOM or local engineering approval. Subsequent damage must be repaired.

a. Areas Not to be Exposed to Paint Remover.

(1) De-icer boots, wing and tail.

(2) De-icer element, leading edge of engine cowl-air intake.

(3) Wheel wells.

(4) Propellers.

(5) Propeller spinner or propeller control.

(6) Cockpit enclosures, including avionics panels, instruments, etc.

(7) Engine air intakes, tail pipe area. Battery and fuel vents and heater exhaust must be covered to keep out paint remover.

(8) Do not strip sealant presently applied under access covers. Any sealant removed will be replaced using high adhesion sealant MIL-S-81733 Type II, Class B or low adhesion MIL-S-8784 molded in the form of a rubber gasket.

(9) Fiberglass wingtips and other .berglass components, e.g., antennas and radomes.

b. Deleted

c. Radomes. Radomes will not be stripped.

2-5. PROTECTION OF SURFACES NOT TO BE STRIPPED.

a. General.

(1) Mask all transparent plastic surfaces such as windows, canopies, blisters, etc. Plastic will be crazed, frost or lose transparency if paint remover comes in contact with them. Mask radomes in the same manner as plastics to prevent damage to their rain-erosion resistant and antistatic coatings. Also, mask boots or any exposed rubber or elastomer surfaces since remover will accelerate deterioration of these materials. Double masking of sensitive areas is recommended.

(2) Mask detailed decalcomania which cannot be easily replaced. Other instructions, stencils or warning signs will either be masked or replaced after repainting.

(3) Do not attempt to remove coating from loop antennas. Protect the housing from contact with remover.

(4) Mask all faying surfaces, seams, access doors, pitot static ports (area within a one (1) inch diameter), or other openings with barrier paper and tape.

(5) All edges, repairs and loose fasteners on all honeycomb panels shall be masked prior to chemical stripping.

(6) Mask over joints, access doors, or other openings or panels which have been bonded with adhesives. Paint remover has a detrimental effect on the strength of adhesives when allowed to contact them.

(7) Masking may be done with barrier paper, Military Specification MIL-B-131F or MIL-B-121, Type I, Grade A, Class 1; tape, pressure sensitive adhesive, for masking during paint stripping, Military Specification MIL-T-23397, Type II (72 hour protection).

(8) Masking may also be done with paraffin wax, Federal Specification VV-W-95, in lieu of paper. Use only masking tape, MIL-T-21595, to outline area to be masked to keep wax off metal. Melt wax and brush a thick coat on surface. The temperature of the wax should be approximately 150°F (65°C), as higher temperature may deform plastic.

b. Masking of Seams. Masking of seams can be done with MIL-S-8784, Class B, sealant. Allow to cure to a firm rubbery state (approximately 20 hours at 60°F to 80°F) prior to starting the stripping operation. The required cure time for this material must be considered when flow or processing time is of prime importance. After the paint stripping operation is completed, the fillet formed by the MIL-S-8784, class B, material shall be peeled off by hand.

CAUTION

All masking or protective materials must be removed immediately upon completion of paint stripping and/or painting process.

2-6. GENERAL PREPARATIONS.

NOTE

The only chemical paint remover authorized for use on aircraft surfaces is MIL-R-81294. Other chemical removers cannot be used unless authorized by AMSAV-MEA.

a. Preparation.

(1) Place aircraft on a wash rack, preferably in a shaded area, and attach a static ground.

(2) For best results, ambient temperature should be approximately between 50° and 100°F (10° and 37°C). Do not attempt to accomplish paint removal in rain, or on aircraft surfaces which are not dry.

(3) When painted surface is exceptionally dirty or coated with fuel, oil, grease, mud, or other foreign matter, clean it before applying remover in accordance with paragraph 2-1.

b. Drying. After aircraft has been cleaned, allow sufficient time for surfaces and crevices to dry thoroughly. Water remaining on surfaces and in crevices has a detrimental effect on paint removers.

2-7. APPLICATION OF MIL-R-81294 PAINT REMOVERS.

CAUTION

Paint remover that is old is not necessarily unsatisfactory for use although it deteriorates progressively with age in removal effectiveness, particularly if subjected to open air and temperatures over 100 °Fahrenheit. More important, there is an increasing potential of corrosiveness upon its aging. Close surveillance shall be made of material age when it is to be used on aircraft surfaces. Any material which is questionable by reason of age, or improper storage, shall be laboratory tested for continued conformance to specification, with particular reference to the corrosive potential, prior to being used on aircraft surface. Any remover found not to be in accordance with Military Specifications will be discarded.

NOTE

Removers must be well mixed before use as they tend to segregate on standing. Do this by agitating with a wooden paddle if mechanical mixers are not available. Rolling a drum will not mix its content very effectively. At temperatures below 60 °F, the removal power of removers will be noticeably slower than at higher temperatures.

a. Applying Removers. Beginning at the highest point of any vertical or sloping surface, apply a coat of remover, with a long handle, nonmetallic brush. Barrel pump and spray gun may be used for application of removers. In no case should the spray be highly atomized. Agitate with a stiff fiber brush, if necessary, to loosen paint. A wet film of remover should be maintained on the surface being stripped to obtain efficient removal. This may require additional application of the remover. Areas should be treated progressively, kept wet, and sufficient time allowed for the stripping action. Best results are obtained by applying removers in shaded areas since sunlight dries the remover quickly.

WARNING

Prolonged breathing of remover fumes must be avoided. Use only in well ventilated areas.

NOTE

Deleted

b. Painted Surfaces. Enamel surfaces should wrinkle within 5 to 15 minutes after application. Most surfaces with lacquer or polyurethane paint will not wrinkle but will merely be softened by the remover; allow remover to remain 8 to 20 minutes, keeping a wet surface by applying another coat of remover if necessary.

c. Cleanup of Stripped Surfaces.

(1) Flush the stripped surfaces, using water heated to 90° to 120° Fahrenheit at 150 to 250 psi maximum. If high pressure warm water is not available, cold water at usual hydrant pressure may be used. This will require a longer time to accomplish the washing. Lifted paint will be flushed by starting at the bottom and working upward, keeping the flushing liquids off the unwashed parts. After flushing thoroughly, continue cleaning in accordance with TM 1-1500-344-23.

NOTE

Zinc chromate primed surfaces, where topcoat material has not been applied, should be washed down as soon as possible after initial loosening of primer. If the surface becomes dry, another application of remover is required since zinc chromate tends to become redeposited on the surface.

(2) Tape and loosened paint may be removed by hand or by using water under pressure.

2-8. STRIPPING IN CONFINED LOCATIONS.

a. Removal of Paint with Solvent Materials. When impractical to use emulsified paint remover because of complexities of assembly and rinsing difficulties, remove acrylic paint with solvent materials such as ethyl acetate, Federal Specification TT-E-751, lacquer thinner, Federal Specification TT-T-266, or dichloromethane, Military Specification MIL-D-6998; remove polyurethane paint by mechanical means.

WARNING

Prolonged breathing of solvent fumes must be avoided. Use only in well ventilated areas.

b. Application of Solvents

(1) After appropriate masking, apply solvents with soft bristle brush or clean cloth.

(2) Allow solvent to remain on surface until paint has softened and lifted. To keep the area wet with solvent, it may be necessary to keep a cloth on the surface and keep the cloth saturated with solvent.

(3) Wipe all of the solvent away with a clean damp cloth, frequently rinsing cloth in clean water.

(4) Repeat steps (1) through (3) as necessary until all paint and residue have been removed from metal surface including recesses and around rivets, bolts, etc.

(5) Wipe clean and dry with clean lint-free cloth, Federal Specification CCC-C-46.

2-9. MECHANICAL REMOVAL FROM METALS.

Mechanical removal of paint is recommended where chemical removal would be impractical because of structural complexities, rinsing difficulties, or where it is more efficient or environmental restrictions on chemical exists.

a. Hand removal may be accomplished using:

(1) An abrasive nylon mat, Military Specification MIL-A-9962; aluminum wool, Military Specification MIL-A-4864, or Federal Specification P-P-101 No. 400 abrasive paper. Do not use steel wool.

(2) A hand operated air powered drill motor with rotary brass wire brush or abrasive flap brush on heavy structural non-clad aluminum alloys.

WARNING

The use of goggles or face shield is mandatory since paint particles can break loose and fly off.

CAUTION

Do not use steel brush or steel wool on non-ferrous surfaces. Metal particles will become embedded in the substrate, causing corrosion by galvanic action between dissimilar metals.

(3) Wipe area with clean damp cloth followed by wiping dry, with a clean, dry lint-free cloth. Areas may be blown with warm oil-free air or gaseous nitrogen.

WARNING

Magnesium-Thorium Alloy Components of T-53, T-55 and T-63 engines contain radioactive material. The mechanical method of corrosion removal shall be attempted only under the operating procedures required by TB 43-0108.

b. Abrasive Blasting. Abrasive blasting (a rapid method) consists of bombarding a surface with an abrasive at high velocity. The abrasive may be glass beads, steel grit or organic materials and is carried to the surface by air at high velocity. This should not be applied on surface where critical dimensions must be maintained or on thin structures which can warp.

c. Wire Brushing. Wire brushing is a mechanical abrasive operation done usually with a hand wire brush or a wire brush mounted on a motor driven wheel. By using different types of brushes and various lengths and gages of wire, a wide range of abrasive action is possible. Use wire brushing to remove heavy corrosion and imbedded paint, especially where chemical treatment is not practical. A typical wire brushing procedure follows:

(1) Protect adjacent components from scale, chips, and dust.

(2) If grease or oil are present, clean area by method outlined in paragraph 2-1 or TM 1-1500-344-23.

(3) Wire brush area to a firm metal subsurface.

WARNING

The use of goggles or face shield is mandatory when using motor-driven brushes.

2-10. SPECIAL CONDITIONS. Where difficulty is encountered on magnesium surfaces, paint may be removed by following instructions in Military Specification MIL-M-3171, Processes for Pretreatment and Prevention of Corrosion on Magnesium Alloy. Do not blast flexible braided metal lines such as copper or stainless steel. Use only clean abrasive on Titanium Alloys.

SECTION III. METAL CONDITIONING

2-11. METAL TREATMENT. Aluminum and magnesium surfaces to be painted will be cleaned prior to painting and prior to the application of the chemical treatment specified in paragraph 2-12 with a bristle brush using any of the cleaning compounds or processes listed in TM 1-1500-344-23 series.

2-12. CHEMICAL COATINGS (CONVERSION COATINGS).

a. Chemical Treatment of Aluminum Surfaces. Surfaces will be cleaned prior to application of chemical coating. Chemical treatment of aluminum will be as follows:

(1) General. Chemical surface treatment, such as alodine, provides a passive surface layer that resists corrosion and provides a necessary base for bonding the paint to the aluminum.

(2) Materials. Treatment materials will conform to Military Specification MIL-C-5541.

(3) Application.

(a) Prepare and apply in accordance with manufacturer's instructions. In general, mix 1-1/4 ounces of compound with each gallon of water.

(b) Apply solution to perfectly cleaned but wetted surfaces.

(c) Apply solution liberally and evenly to only as much surface at a time as can be coated and rinsed before surface treatment solution dries. When the surface action appears complete on all areas, stop the reaction by rinsing or flooding the area with fresh, clean water. The reaction of the solution is stopped by diluting the acid component. Be careful not to flush the solution into areas where it cannot be removed and/or further diluted by water. Accidental spills in confined areas can be neutralized using baking soda followed by rinsing with clean water. Allow the surface to drain and/or pick up the excess water by absorbing in a sponge by blotting action; do not rub. Excess rubbing will remove the coating since it is soft.

b. Chemical Treatment of Magnesium Surfaces. Treat magnesium surfaces to be painted in accordance with Military Specification MIL-M-3171. Apply strictly in accordance with manufacturer's instructions.

2-13. PRETREATMENT AND SEALING OF BARE METAL SURFACES.

a. Aluminum bare metal will be alodine treated per MIL-C-5541, Class 1A, prior to applying the first primer.

b. Bare magnesium metal areas will be dichromate treated per MIL-M-3171, Type 6, prior to applying the first primer.

NOTE

Paint will not bond to the brown powdery surface of excessively treated magnesium or aluminum, nor will paint bond to treated aluminum surfaces which are too dark.

c. Steel substrates will be treated with zinc phosphate per TT-C-490, Type I, prior to applying the first primer.

d. All missing or deteriorated skin sealant will be replaced using low adhesion, corrosion inhibiting AMS-3265 sealing compound.

CHAPTER 3

PAINTING: GENERAL

Section I. PAINTING TECHNIQUES

3-1. STORAGE OF PAINTING MATERIALS. To prevent fire, spoilage, and waste arising from improper storage and surplus stock, the following precautions shall be observed.

WARNING

Space heaters or other direct fired heaters shall not be used to heat storage areas. Floors should be concrete and drained to one point; drain shall run to sump or detached cistern and have deep trap. Ventilation shall utilize screened inlets 6 inches above floor and screened vent through roof.

a. Paint and thinners shall be stored where possible in dry, fire resistant well drained and well ventilated structures, preferably separated from other buildings, and under automatic sprinkler protection.

b. To avoid possible leakage arising from corrosion of containers, protection shall be provided against wetting by rain, snow, steam leaks, or other sources of water.

c. Materials shall not be stored in the proximity of steam lines or other sources of heat to avoid direct heat. It is recommended that steam heat be used with coils above stock and screened to prevent contact with drums or containers.

d. Storage shall not be on floors below grade and first tier of containers shall be laid at least 2 inches above floor level to provide for suitable ventilation and drainage. Sills shall be provided at openings to storage areas, approximately 6 inches above floor

e. Paint components and thinners packaged in 55 gallon steel drums may be stored outdoors provided containers are protected against rusting by painting of bare metal areas and are set on dunnage so as to provide approximately 2 inches clearance above ground. Drums stored out of doors shall be laid on their sides to protect loss of markings stenciled on the heads through weathering action of rain, snow, and sun.

f. Handling of stock shall be conducted in a manner to avoid damage to labels. Relabeling of material where labels have been obliterated may result in mislabeling, with consequent incorrect use or waste of material. Materials with obliterated labels should be properly discarded.

g. Care should be taken to assure protection of the paint or components from moisture. Particular care should be exercised to prevent water entering containers as paint is opened.

h. Containers of paint materials shall be readily accessible at all times. Other materials shall not be stacked on top of paint materials.

i. Containers shall be stored and issued in order of dates of manufacture shown on respective labels. Materials bearing oldest date shall be used first In the event that date of manufacture is not shown on container, date of receipt shall be considered as approximate date of manufacture for purposes of storage and issue.

j. To give best results, temperature of paint materials should be between 60° and 85° F (18° and 29° C) at time of use. Storage conditions that result in paint temperatures below 55° F (13° C) or above 95° F (35° C) require storage of material at room temperature for approximately 25 hours prior to use.

k. Transit and Storage - In closed containers, temperature and humidity will not affect the stability of either component of two part coatings. Both components will remain stable for 1 year, as long as the component B, the catalyst portion, remains in closed and sealed containers. Where it is necessary to extract a portion of the component B, it should be done in a cool location and the lid resealed as rapidly and as tightly, as possible.

3-2. SAFETY AND HEALTH ASPECTS OF PAINTING.

CAUTION

Federal and state environmental regulations are applicable to all chemicals used in painting processes. Precautionary measures shall be taken to prevent paint and paint removal waste from conlaminating lakes and streams. Some of the chemicals utilized for painting and paint removal require treatment or other special control prior to disposal. Disposal of materials shall be accomplished under the direction of the installation facility engineer and MEDDAC Health and Environmental Activity in accordance with applicable directives, and in a manner that will not result in violation of local, state and federal pollution criteria. Guidelines for disposal are cited in AR 200-1.

Painting operations present hazards that require control or preventive measures. Vapors produced, particularly in spray painting, are highly flammable, as are the accumulated dried coating materials deposited on walls, floor and equipment in painting areas. Coating materials and their thinners very often contain toxic substances which are injurious to health by inhalation and, to a less degree, by physical contact. Painting operations also involve hazards resulting from the improper use of work stands, ladders, hoists, etc. All painting personnel shall take all requisite safety precautions with regard to toxicity and other health hazards, and flammability hazards in accordance with existing instructions and regulations. All safety precautions regarding personnel health, fire prevention, ventilation, handling of equipment, electrical grounding, storage of coating materials, area preparation, use of vapor-proof lights, etc., are mandatory.

a. Personnel Safety Measures. The following measures are minimum requirements for personal safety.

(1) Wear protective clothing to prevent contamination of ordinary clothing.

(2) Aprons and clothing that become saturated with paint should not be worn in shop. Saturated clothing shall not be hung in lockers or other similar confined spaces that might induce spontaneous combustion.

(3) All personnel should wear non-sparking shoes, which are free from metal nails in soles and heels.

(4) Full skin covers, i.e., gloves or skin protective creams shall be applied to exposed skin areas prior to painting to guard against injurious effects of paints, and to allow ready removal of paints by washing the area with water. Skin areas shall be clean and dry before cream is applied.

WARNING

Certain paint solvents and pigments may cause dermatitis on coming in contact with the skin. Some solvents may penetrate skin, or may be inhaled as vapors, and lead to systemic poisoning. Care must be taken to avoid skin contact or breathing vapors to avoid systemic poisoning.

(5) Personnel engaged in stripping or Cleaning with methylethylketone (MEK), acetone or toluene and spray application of paints shall wear an approved organic vapor cartridge respirator approved by the Operational Safety and Health Administration (OSHA). (See Tables 8-7 through 8-9).

(6) Wash thoroughly after painting and before eating, and do not carry food into spraying areas.

(7) Spray paint only when adequate exhaust or general ventilation is available.

(8) Personnel having histories of skin or respiratory ailments should be excluded from paint crews applying two component polyurethane or epoxy paints. When there is doubt, appropriate medical tests must be administered.

(9) Individuals who engage in mixing or applying plural component paints containing isocyanates will be subjected to appropriate pre-placement surveillance and periodic job related medical tests.

b. Fire Precautions. Most aircraft paints contain highly .ammable constituents, which, under suitable conditions, can form explosive mixtures with air. As a result, the following precautions shall be taken:

(1) Electric motors used to drive exhaust fans or other equipment in storage places shall be of the type approved for explosive atmospheres. If such motors are not available, substitutes shall be located outside the room or building. Motor housing, fan frames, and the like shall be properly grounded to prevent possible static sparks, and all electric wiring shall be enclosed in conduits.

(2) All electric lights bulbs used within storage area shall be enclosed in vaporproof globes, mounted in keyless sockets.

(3) Motor starting devices and switches in all electrical circuits, if not of the explosive-proof type and approved by an established electrical underwriter, shall be located outside room or building to prevent fire hazards from flammable vapors.

(4) Tools used to open containers shall be nonspark-producing types. All electrically-driven portable tools used in this area shall be explosion proof and properly grounded.

(5) Ample fire extinguishers of the foam, dry chemical, or carbon dioxide type will be provided.

WARNING

Containers of paint may develop internal pressure during storage and should be opened cautiously.

c. Opening of Containers. Paint containers may develop internal pressure due to storage at high temperatures or by development of gas due to deterioration. This condition may be detected by a bulging of light gage steel drums. Containers must be opened slowly to allow the pressure to escape before completely removing the seal.

NOTE

Failure to follow this procedure may result in paint being spattered on personnel and surrounding areas.

(1) Open containers, sealed with bungs, by slowly turning bung out until a hissing sound is heard. When hissing stops (an indication that pressure in and out of drum is equal) completely remove bung.

CAUTION

Use a fine, nonspark-producing tool and a soft-head hammer (rubber or plastic) to puncture drum.

(2) Containers which are bulged or distorted due to internal pressure shall have a small hole punctured in top to release pressure. After pressure is released, container may be opened in usual manner.

3-3. ATMOSPHERIC CONDITIONS FOR PAINTING.

a. Coatings normally should not be applied under unfavorable atmospheric conditions such as wind, strong drafts, dust, high humidity or extremes of temperature.

b. Specific guidance on ambient temperature and humidity ranges for painting with various coatings may be found in other parts of the TM, in the applicable specifications, or in the manufacturer's recommendations. If not specific guidance is given, the general guidance is to not paint below 50°F or above 90°F, nor below 40% or above 75% humidity.

c. The temperature of the surface to be painted must also be considered, and work schedules adjusted to allow or induce surface(s) to come to the proper temperature before applying paint.

3-4. SURFACE CONDITION. Prior to painting, inspect or test all metal surfaces for cleanliness and physical condition suitable for receiving paint material.

a. The water break test is a method of evaluating the degree of cleanness of a metal surface. It is based on the ability of a clean surface to sustain an unbroken film of water. Test representative areas of the surface to be painted by projecting distilled water, deionized (DI) water, or reverse osmosis (RO) water that complies with ASTM D1193 Type I, II, III, or IV on it using an atomizing device such as a nasal atomizer. Do not use a paint sprayer for this purpose as the excessive pressure will defeat this test. If water gathers into separate droplets within 25 seconds (that is, if the surface shows a water break) the surface has failed the cleanness test. If, on the other hand, the water suddenly flashes out into a film over a large area, an impurity such as alkali detergent, etc., is on the surface and it has failed the test. If the water merges into a continuous film without a sudden flashout, the surface has passed the water break test. A solvent wipedown is not required if the surface has passed a water break test.

b. Insufficient rinsing after cleaning may leave an unacceptable surface. For best adhesion of coatings, metallic surfaces should give either a neutral or a slightly acid reaction when alkaline cleaners are used. Moistened red litmus paper when applied to the surface shall not react by turning blue. If such color changes occur, apply a 0.20 to 0.25 percent chromic acid O-C-303 solution until a piece of blue litmus paper applied to the treated surface turns red, which indicates an acid surface. Permit the acid solution to remain on the surface from two to five minutes. Follow with a water rinse and then wipe dry with clean, lint-free cloths.

c. Determine whether the surface has appropriate surface treatment in accordance with TM 1-1500-344-23 Series.

d. When a special solvent cleaning requirement exists in aircraft painting operations, use Military Specification, MIL-D-16791, TYPE 1, general purpose detergent, consisting of 1/2 ounce of detergent in a gallon of water for wipedown. Then wipedown the aircraft with isopropyl alcohol, TT-I-735. Additionally, each time the painting sequence of an aircraft is broken overnight or longer, this same procedure shall be performed immediately prior to application of further coats to insure cleanness and proper paintability of the surface.

e. Examine for presence of corrosion or foreign matter retained in seams and crevices, etc, and for oily films or deposits which may have accumulated after cleaning. If any of these are present, remove or treat as directed in TM 1-1500-344-23 Series.

f. Assure that all metal surfaces and all seams and crevices are dry prior to application of paint. Pressurized filtered air may be used to dry these areas.

g. Non-metallic surfaces should be dry, free of contamination; all pores sealed and scuff sanded with an abrasive nylon mat in accordance with Military Specification MIL-A-9962.

3-5. MATING SURFACES.

a. Application, Similar Metals. All seams in which the mating (faying) surfaces are similar metals will be protected by applying two coats of primer to each surface being joined. Welded faying surfaces shall not be primed prior to assembly. Faying surfaces that are to be adhesively bonded will be surface treated and processed as specified in the approved bonding procedures prescribed for the assemblies concerned. In addition to the required primer coatings, faying surfaces of magnesium alloys will be filled with an approved sealing compound.

b. Application, Dissimilar Metals. Each surface to be joined will receive a minimum of two coats of the appropriate primer, and, in addition, the following precautions will be taken.

(1) Where magnesium is one of the metals of dissimilar metal faying surfaces, the metals will be separated by use of an approved barrier tape. The tape will extend not less than 1/4 inch beyond the joint edges to prevent moisture from bridging between the dissimilar metals. Sealing compounds conforming to Military Speci.cation MIL-S-81733 may be used as moisture barriers in lieu of tape and when used, the sealing compound will be applied between the surfaces and squeezed out of all boundaries and the excess removed in a manner that will fillet all edges. The fillet width will be not less than 1/4 inch. Joint areas which would retain water will be filled with a sealing compound conforming to Military Specification MIL-S-81733 or MIL-S-7124. When the use of a barrier tape or sealing compound is impractical because of mechanical or other factors, a primed 5356 aluminum alloy shim extending 1/4 inch will be used in lieu of the tape or sealing compound.

(2) Butt joints consisting of a riveted magnesium sheet and a riveted dissimilar metal sheet will be protected by grooving the seam to a width of not less than 1/8 inch and filling with sealing compound conforming with Military Specification MIL-S-81733. The depth of the groove will be sufficient to retain the sealing compound conforming to Military Specification MIL-S-81733, which will be subsequently applied and smoothed flush with the surfaces of adjacent dissimilar metals.

(3) Butt joints consisting of a magnesium sheet and a dissimilar metal sheet, either of which is secured by mechanical means other than riveting, will be protected by use of an approved adhesive barrier tape or a primed 5052 aluminum alloy foil which covers the cut ends of either or both dissimilar metal sheets and extends not less than 1/4 inch beyond the joint edge.

(4) Organic adhesive barrier tapes or metal foils will not be used on exterior surfaces.

c. Attaching Parts. Parts, such as nuts, bushings, spacers, washers, rivets, high-shear rivets, screws, self-tapping screws, sleeves for "shakeproof" fastener studs, self-locking nuts, "speed nuts", clamps, and the like, do not need to be painted in detail except when dissimilar metals or wood contacts are involved in the materials being joined. Such parts will receive a coat of epoxy primer, MIL-PRF-23377 (wet or dry, at installation). Rivets (5066) in magnesium alloy need not be installed with epoxy primer. For magnesium dissimilar combinations follow the general requirements of paragraph 3-5. Close tolerance bolts passing through dissimilar metals will be coated before installation with a zinc chromate compound conforming to Federal Specification TT-P-1757, or a wet epoxy primer in accordance with Military Specification, MIL-PRF-23377. Aluminum alloy washers (5356) of suitable design will be used under machine screws, countersunk fastners, boltheads, and nuts that would otherwise contact magnesium.

3-6. MASKING. Masking of specific areas is required in painting operations on large assemblies or structures either for protective reasons, as in the precautionary note below, or for purposes of delineation.

a. Mask areas such as windows, canopies and large openings with combinations of barrier materials.

(1) Federal Specification MIL-B-121, usually a treated paper which is oil and moisture resistant.

(2) Federal Specification MIL-B-131, usually a laminated foil and cloth or foil and paper with good water vapor resistance.

NOTE

Both types above are heat sealable.

(3) Crepe-backed paper masking tape, Military Specification MIL-T-21595, Type I.

b. Cover small or regularly shaped parts with tape alone.

c. In repetitive spraying of the same or similar structures, it is advisable to have available pre-designed bandages, socks, etc., of barrier paper or cloth.

d. Avoid using tape in such a way as to leave a paint edge on aerodynamic surfaces unless feathering by sanding can be done safely.

e. Use only approved masking tapes in varying widths required by the job. A complex or curved area is better masked initially at the paint edges with narrow (1/2 inch) tape. Wider tape may then be applied over the narrow, if required.

f. Use only approved masking paper for large area masking. Coating solvents may dissolve and deposit printing ink from newspapers, etc., on the surface of the area being masked; hence, such materials should be avoided as masking materials.

g. When spray painting, mask or cover surfaces at a distance from the area being painted which might receive over-spray or paint drift.

h. Masking tapes should be removed as soon as possible after coating application.

i. Press tape firmly at the masking edge when applying it to prevent paint bleeding under it by capillary action.

NOTE

Care should be taken to insure that paint is not applied to certain surfaces where paint will interfere with a function. The following should be masked or otherwise protected during painting: Machined surfaces that move with respect to each other such as threads, slip rods, bearing contacts and gear teeth; electrical parts, such as contacts, relays, insulators, sockets, plugs, connectors, wiring and terminals; plastic and rubber (natural and synthetic) mounts, spacers, etc, and lubrication fittings, cups, oil holes, etc. Do not paint interior of bomb racks or other actuators except as noted on manufacturer's drawing.

3-7. MIXING.

a. Painting materials shall be prepared for application under dry and clean conditions with dry and clean equipment.

b. Paint shops shall be equipped with continuous mechanical paint agitators of suitable capacity. The proper sequence for preparing packaged materials prior to each use is as follows:

(1) Allow materials to come to room temperature.

(2) Remove lids and inspect contents for skinover, gelling, lumps, etc. Skins, if present, shall be carefully removed and discarded, retaining liquids which drain from them. Gelled, lumpy or otherwise deteriorated paints shall not be used, but properly discarded.

NOTE

Cans of the pigmented component of MIL-DTL-64159 or MIL-DTL-53039 paint with non-resealable lids should not be opened and inspected until after the original mechanical agitation, if practical.

(3) Thoroughly agitate all component containers, using a mechanical agitator prior to mixing or thinning and again prior to and during application. Agitation must be continuous during application to assure uniformity of pigment.

c. Use automatic mixing and proportioning devices, if possible. When automatic equipment is not available, mix paint as follows:

(1) Breakup sediment remaining in original container with a clean wood or metal paddle; stir until a smooth, uniform, heavy paste forms.

(2) Proportion paint in clean mixing container to the four to one ratio specified. (This applies only to MIL-DTL-64159 or MIL-DTL-53039. Respirator must be worn.

(3) Catalytic action begins immediately on mixing. An eight hour pot life can be anticipated after mixing. Ideally, mixed paint should be used in six hours, to assure the capability for complete system purging and cleaning to precluded equipment damage.

(4) Assure complete mixing when manual mixing is used.

(5) To avoid the possibility of incompatibility of materials under the same specification but of different manufacturers, such materials shall not be mixed. Primers and topcoats from different manufacturers, under the same specification, will not be mixed, but may be applied separately to areas which are to be over-coated. Every effort shall be made, however, to assure that an entire topcoat is restricted to the product of a single manufacturer and, where possible, to the same batch in order to maintain uniformity of color, finish, etc.

(6) Application and mixing equipment must be thoroughly purged and cleaned after use.

CAUTION

Mixing should always be done in areas that are well ventilated and away from any source of open flame.

3-8. THINNING.

a. When thinning is necessary, always add thinner to the coating material. Adding coating material to thinner may result in an irreversible separation or degradation of some of the coating ingredients. Thinner should be added slowly with continual stirring to obtain complete mixing. For all thinning, use only thinners authorized in applicable instructions in this technical bulletin or pertinent specifications or, in the absence of these instructions, those recommended by the manufacturer. MEK can be used in cold weather. Other thinners may be needed in hot weather.

WARNING

METHYL ETHYL KETONE

Keep away from heat and open flame.

Keep container closed.

Use with adequate ventilation.

Avoid prolonged breathing of vapors.

Avoid prolonged or repeated contact with skin.

Failure to observe these precautions can result in serious injury or systemic poisoning of personnel.

NOTE

The wrong thinner may destroy certain characteristics of a coating material without immediately giving visual evidence in the wet state.

Reduced material which has increased in viscosity due to evaporation will require corrective additions. However, some coating materials which undergo chemical processes, such as polymerization to create a film, cannot be thinned beyond a certain point and remain usable; nor can they be brought back to the correct viscosity by thinning after the chemical action has progressed beyond a critical point. This is the case with epoxy and polyurethane.

b. Thinning shall be controlled by weight, volume or viscosity measurement to obtain and maintain proper and uniform consistency. If there is no specification covering the material, thin according to manufacturer's instructions.

NOTE

Do not mix materials of the same specification but supplied by different manufacturers during application. This will avoid problems of incompatibility in the liquid and curing phases.

c. Strain all material to be used in spray equipment through clean 60-90 mesh metal strainers in accordance with paint or equipment manufacturers instructions.

3-9. APPLICATION EQUIPMENT.

a. Application Systems. The application equipment plays a key role in the overall success of painting aircraft and aircraft components. Selection of application systems and care thereafter are essential considerations in the painting process, whether the system is an automated (robotics) or a manual type. No description or details are provided herein because of the wide variances

between equipment manufacturers and local conditions. Each manufacturer's instructions and other details must be consulted. Special consideration should be given equipment with which plural components are to be applied. Problems may be encountered, i.e., required accuracy of mixtures, pot life of mixtures and effects resulting from non-adherence to prescribed application procedures.

b. Components of Application Equipment.

(1) Automated Systems (Robots). Such systems include, but are not limited to, metering and mixing equipment, air compressors, air cleaners, electrostatic generators, spray booths, feed lines and tanks, regulators and computerized automated components.

(2) Hoses. Because of friction losses in hoses, it is essential that the proper sizes be used. Do not use hoses longer than 50 feet except in the case of high pressure air hoses leading to the regulator or tank. These may be a maximum of 150 feet for painting such areas as the tail surfaces of exceptionally large aircraft which are of considerable height above the ground. Extra lengths of hose may be attached for this use but should be removed when no longer needed. The high pressure air hose should have a minimum inside diameter of 7/16 inch. No less than 3/8 inch ID fluid hose should be used from the tank to the gun and no less than 5/16 ID air hose from the regulator to the tank and from the tank to the gun. Any reduction in size or increase in length from the forestated may produce unsatisfactory results. Air and paint hoses are furnished in various standard lengths. Determine the length required for use in a spray booth measuring the width of the booth and add two feet for the total required length of the hose.

CAUTION

Hoses should always be thoroughly cleaned by purging and flushing with solvent appropriate to the coating material used. When the material is a catalytic system (epoxy or polyurethane), this must be done immediately after use and before the prescribed pot life limit has been reached to prevent the material from gelling in the system.

(3) Associated Electrical Equipment. As required by manufacturers.

(4) Spray Guns, for Manual Applications. MIL-DTL-64159 or MIL-DTL-53039 paints shall be applied only in approved and qualified facilities. No application of MIL-DTL-64159 or MIL-DTL-53039 shall be accomplished in open air. Interior applications of MIL-DTL-64159 or MIL-DTL-53039 paint will be accomplished using personal respirator masks and equipment prescribed in Table 8-6.

CAUTION

Personal protective clothing, and disposition thereof, should also conform to OSHA and NIOSH safety specifications.

(5) Paint Booths and Application Equipment. No description or detail is provided for painting facilities due to the variance of equipment and local conditions. Such equipment must, however, conform to conditions of Tables 8-6 through 8-8. For automated robotic equipment, manufacturer's instructions should be consulted.

(6) Paint Brushes. Paint brushes should be used during touch-up procedures in open air when applying MMIL-DTL-64159 or MIL-DTL-53039 paint. Consult section on touch-up procedures for details.

3-10. PAINT SPRAY GUN TECHNIQUES. When manual spray applications are employed, techniques must be used which insure the most uniform and proper dry thin coating. Spray guns (and spray coatings) are designed to be used with certain spraying techniques. Quality of finish will depend on how well these techniques are used. Spraying techniques include the following:

a. Distance. Depending on the desired width of the spray pattern, the gun is held six to ten inches from the work (figure 3-1). If all other adjustments are correct, greater distance will result in dry spray or dusting and excessive over spray. Holding the gun too close to the work will result in coatings which are too heavy and will have a tendency to sag or run.

b. Stroking. The essence of proper stroking is maintaining the same distance of the gun from

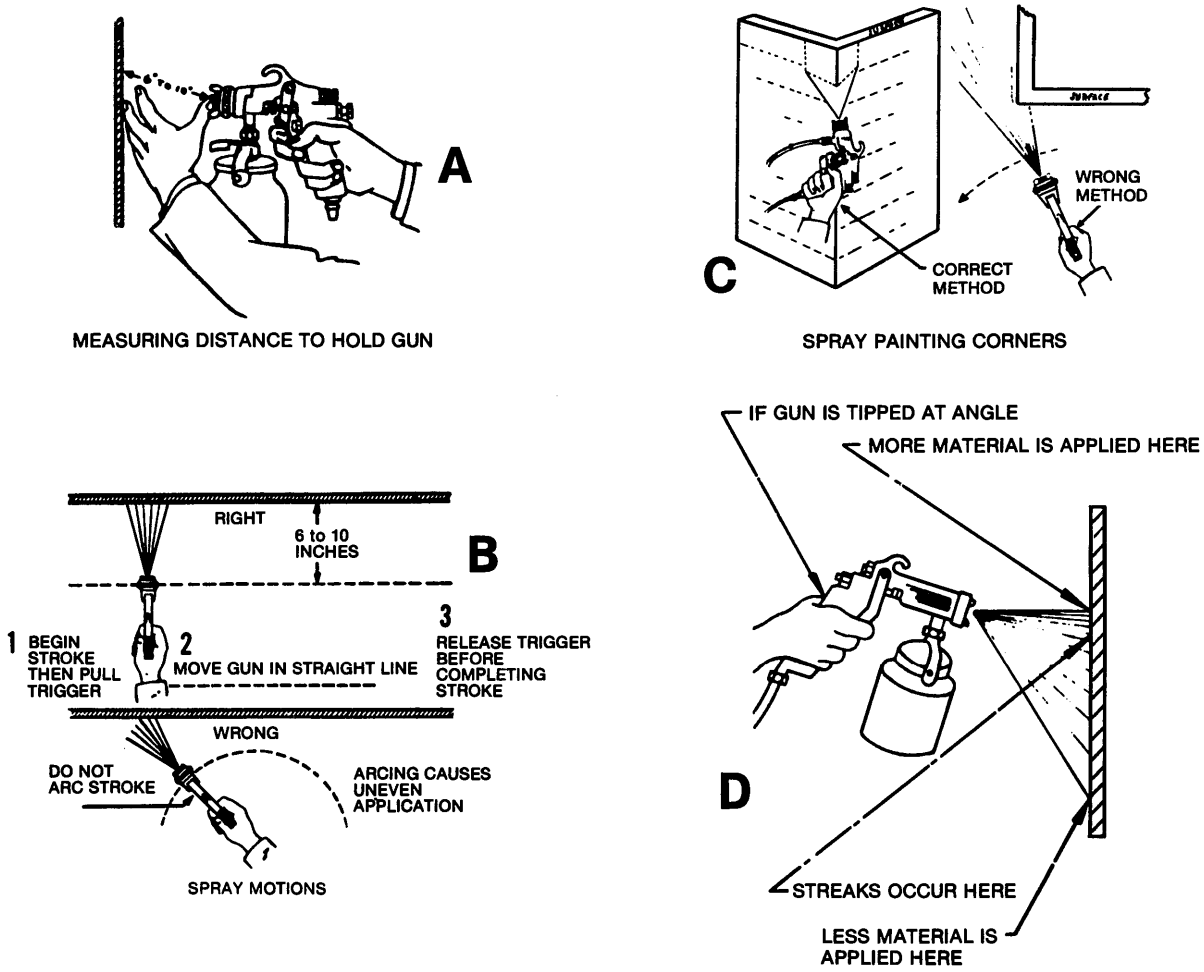

Figure 3-1. Right and Methods of Spraying

the work, the same speed, and as near to a right angle to the surface as possible throughout the entire pass. The natural tendency for spray painters, particularly when fatigued or in an uncomfortable position, is to arc or wave the gun (figure 3-1). This practice must be avoided at all costs. In general, wrist movement must be eliminated in stroking. A flexible wrist almost inevitably causes the gun to describe a curve instead of remaining parallel to the surface. This causes a thicker coating to be applied in the middle of the stroke than at the end. (An exception to the rules is in spotting during touchup. Here it is permissible to fan the gun to lay down a spot which is thinner at the edges in order to blend into the larger painted area.) Touch up here applies only to painting occurring in an approved facility and not open air touch up. Special pains must be taken, particularly when applying dense coating materials with poor flow characteristics (such as MIL-DTL-64159 or MIL-DTL-53039), that the gun is held perpendicular to all surfaces (flat or contoured as they are passed).

If this is not done, the irregular spray pattern formed will lay down uneven thicknesses. Uneven thickness will cause uneven drying when using single component paint. Uneven thickness, when MIL-DTL-64159 or MIL-DTL-53039 paints are used may cause sagging. Protrusions such as screw heads, etc., present surfaces that will require facing the gun in several directions to completely coat them. It may be advisable to spot paint these in advance. The rate of the stroke should be uniform and such as to lay down a full wet coat of material. Stroking should be in parallel passes with each stroke aimed for a 50 percent overlay, or so that the middle of the spray strikes the wet bottom edge of the previous stroke (figure 3-3.)

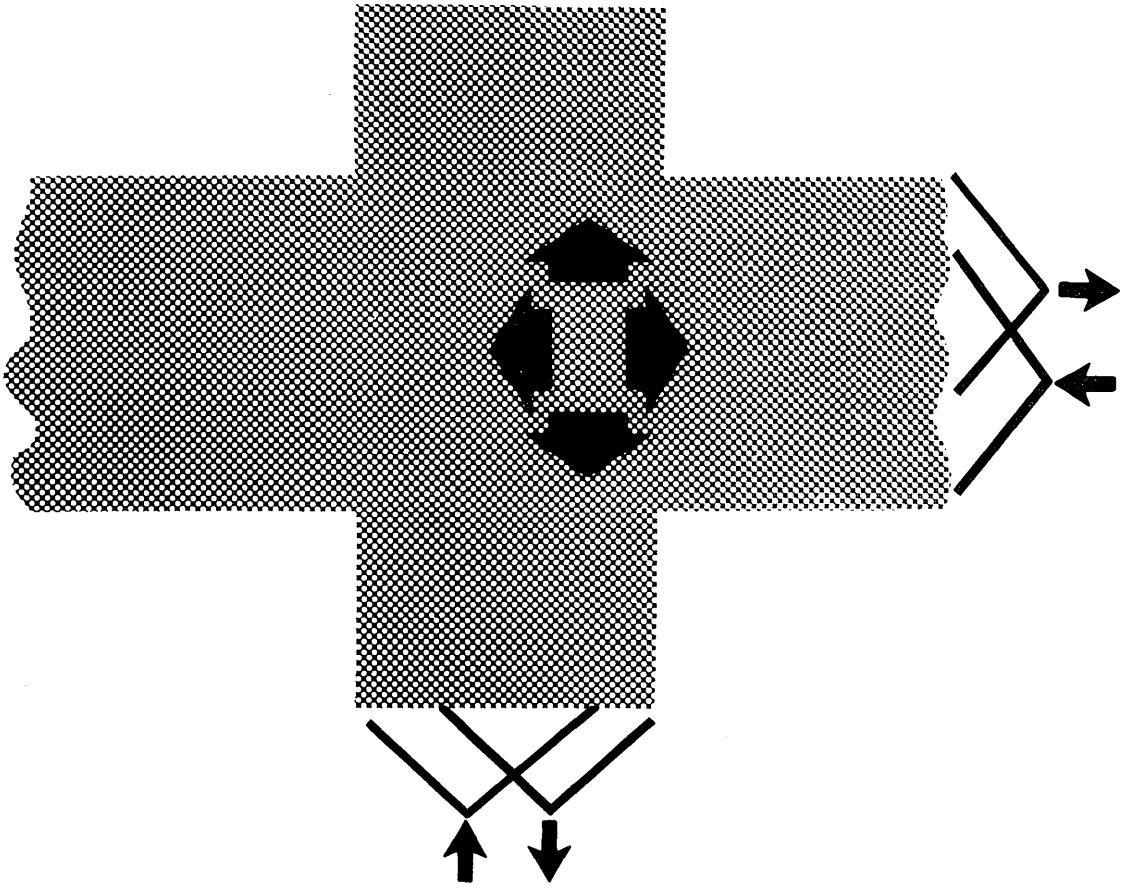

Figure 3-2. Cross-Coating

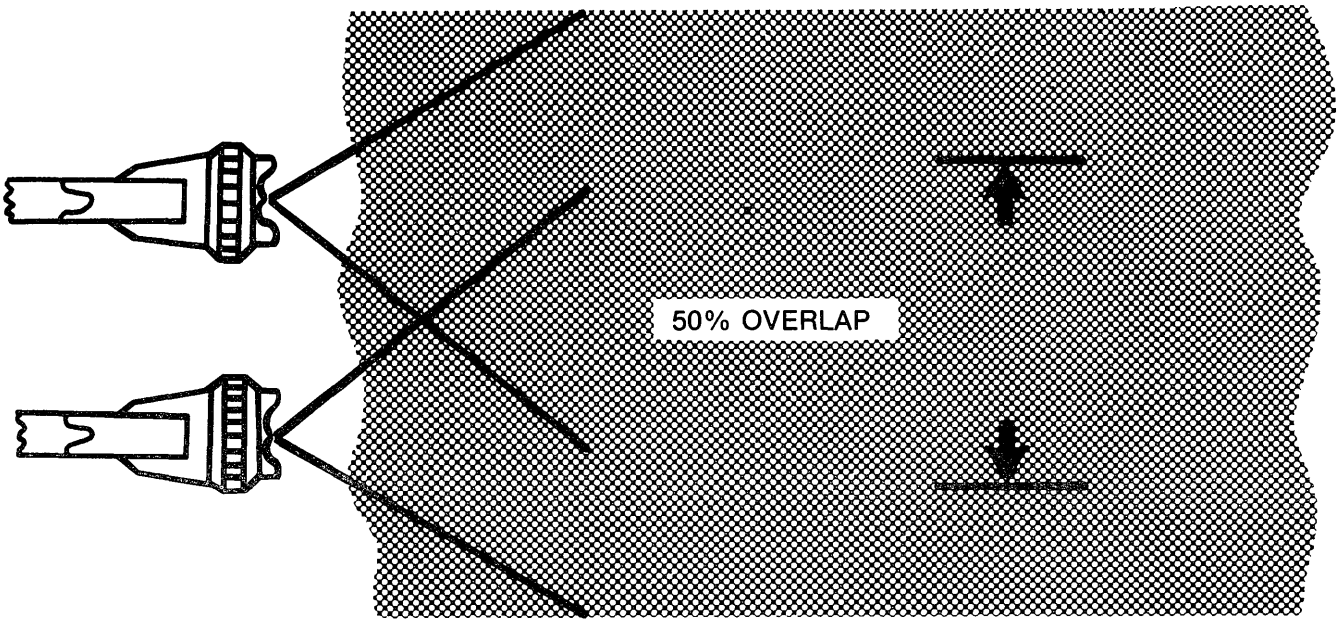

Figure 3-3. Fifty Percent Overlap

c. Triggering. Proper triggering of the gun is difficult to learn and can only be developed by practice. It is a matter of judgement and sensitivity of touch and variations of triggering technique may be called for in special situations. In general, the painter should begin his stroke before triggering the gun and release the trigger before stopping the stroke. It is intended to feather out the end of a stroke so that the end of a succeeding overlapping stroke will blend into it. Examine of correct techniques are shown in figure 3-1.

NOTE

A reasonable amount of care will maintain spray guns and spray equipment in top operating condition and prevent a majority of spraying difficulties. Thorough cleaning immediately after use and appropriate lubrication of equipment are essential. Care should be taken to not allow gelling to occur for any particular mixed batch of plural component paint. The system should be purged and flushed after use of each mixed batch to avoid system stoppages, and batch mixes.

d. Setting Spray Pattern. See Fig 3-4 for recommended adjustments.

3-11. PAINTING DIFFICULTIES AND REMEDIES.

a. Coating troubles may be divided into six groups: (1) Inadequate surface preparation (including temperature), (2) incorrect methods or techniques of application, (3) unusual and unsuitable climatic and atmospheric conditions, (4) unsuitable and improperly adjusted equipment, (5) faulty finishing material or improperly mixed or agitated components and (6) systems not purged of previously mixed materials. An experienced finisher may be capable of adjusting to obtain proper results with faulty materials, but this is an emergency measure only and must be with the cognizance and authority of the quality control facility. The practice is not advised. Incorrect methods of application should be discontinued upon discovery of the discrepancy. Areas painted prior to the discovery of such discrepancies must be inspected and remedial measures taken when necessary. Brushing and roller coating on certain surfaces must be used in confined areas. Remedying incorrect applications, however, also calls for training. The practice of allowing inadequately trained personnel to apply MIL-DTL-64159 or MIL-DTL-53039 coatings, particularly to aeronautical surfaces, is unauthorized and dangerous. Unusual or unsuitable climatic and atmospheric conditions are normally not a problem since manual spray painting must be accomplished in an approved facility which usually compensates for such conditions. Unsuitable or faulty equipment can only be remedied by obtaining proper equipment or repair. Table 3-1 shows common troubles of spray coating operations with suggested remedies or methods of avoidance.

b. Faulty spray patterns and suggested corrections are shown in Fig 3-5.

c. Blushing of coatings is the result of water condensation from the atmosphere within, or on, an applied organic film. It occurs when the temperature of the work surface falls below the prevailing dewpoint. (It shall always be looked for in production coating whenever other than average atmospheric conditions prevail). It shows as a lighter-than-normal or bleached discoloration or increased opaqueness of the film. It may occur to the extent that a surface powder develops which can be removed by fingernail or by light rubbing. (Rubbing will not cure the condition). It may be almost imperceptible, and blushing inducing conditions may escape notice on test panels sprayed prior to production coating due to the temperature differences between test and production environment. Though MIL-DTL-64159 or MIL-DTL-53039 painted items are not susceptible to water or moisture damage immediately after proper application to items. Great care must be taken to avoid surface condensation prior to coating or water induction, in any form, into unmixed components or the mixture prior to or during application. Water will not affect the cure process after proper application. Water will affect paints other than plural component catalytic paints.

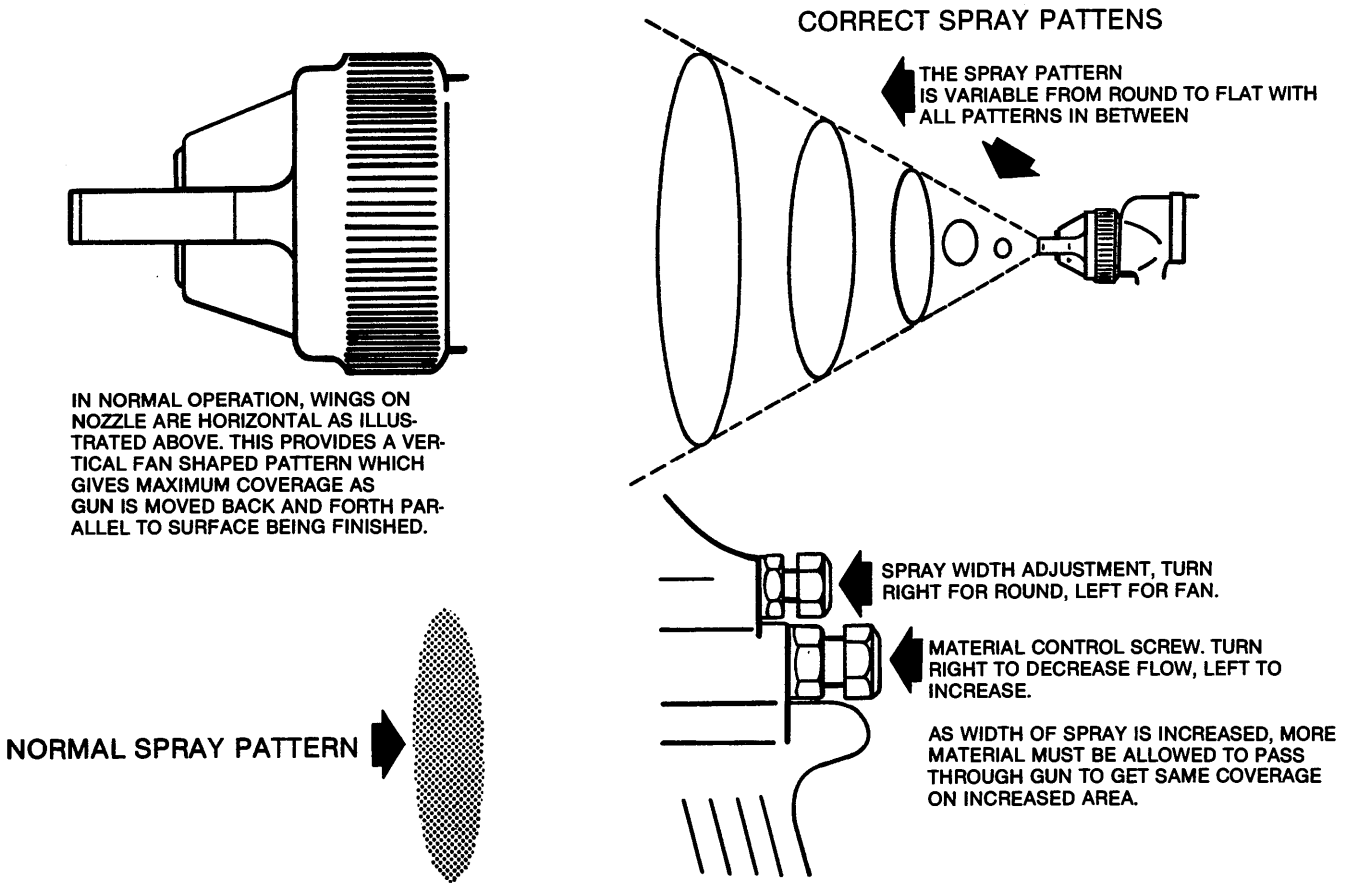

Figure 3-4. Setting Spray Pattern.

3-12. FILM THICKNESS (AIRCRAFT SURFACES).

a. Film applied either too thick or too thin will have reduced effectiveness in service. (See MIL-DTL-64159 or MIL-DTL-53039 for recommended film thickness applicable to standard coatings for aircraft. Recommended minimal dry film thickness is 1.8 mils). Attaining proper coating thickness by spraying is a matter of technique, plus periodically checking the work. There is a limit to the thickness that can be applied at one pass because of possible sagging of the film, and often this must be considered in obtaining the ultimate desired thickness of all paints. Also, there is a tendency with coating materials of good hiding power to increase the spreading rate as the work progresses and this must be curbed. Changing atmospheric conditions, during operations, may have to be compensated for in order to continue applying a uniform film. Frequent checks with a wet film thickness gage, if available, should be made during painting to ascertain and control film thickness. Thickness cannot be gaged accurately without instruments, but, lacking these, the best assurance of consistent films is in correct initial adjustment of gun and material and the use of good judgement.

NOTE

Care should be taken that proper measurements are made when extremely rough texture paint is applied, e.g., MIL-DTL-64159 or MIL-DTL-53039 aircraft green.

PATTERN	CAUSE	CORRECTION
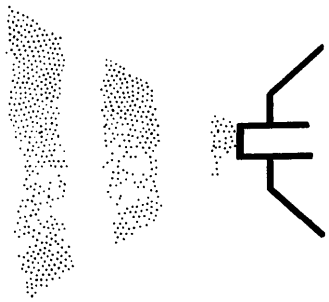	(A) DRIED OUT PACKING AROUND MATERIAL NEEDLE VALVE PERMITS AIR TO GET INTO FLUID PASSAGEWAY. THIS RESULTS IN SPITTING. (B) DIRT BETWEEN FLUID NOZZLE SEAT AND BODY OR A LOOSELY INSTALLED FLUID NOZZLE WILL MAKE A GUN SPIT (C) A LOOSE OR DEFECTIVE SWIVEL NUTON SIPHON CUP OR MATERIAL HOSE CAN CAUSE SPITTING.	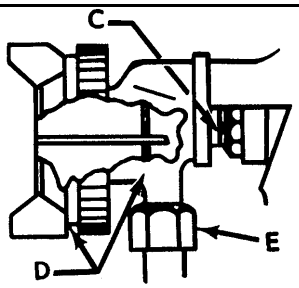 TO CORRECT CAUSE (A). BACK UP KNURLED NUT C, PLACE TWO DROPS OF MACHINE OIL ON PACKING, REPLACE NUT AND TIGHTEN WITH FINGERS ONLY. IN AGGRAVATED CASES, REPLACE PACKING. TO CORRECT CAUSE (B), REMOVE FLUID NOZZLE D, CLEAN BACK OF NOZZLE SEAT IN GUN BODY USING RAG WET WITH THINNER, REPLACE NOZZLE AND DRAW UP TIGHTLY AGAINST BODY. TO CORRECT CAUSE (C), TIGHTEN OR REPLACE SWIVEL NUT E.
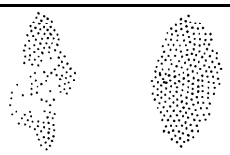	FAN SPRAY PATTERN THAT IS HEAVY IN THE MIDDLE, OR A PATTERN THAT HAS AN UNATOMIZED "SALT-AND-PEPPER" EFFECT INDICATES THAT THE ATOMIZING AIR PRESSURE IS NOT SUFFICIENTLY HIGH.	INCREASE PRESSURE FROM YOUR AIR SUPPLY. CORRECT AIR PRESSURES ARE DISCUSSED ELSEWHERE IN THIS INSTRUCTION SHEET.
	DRIED MATERIAL IN WING PORT "A" RESTRICTS PASSAGE OF AIR THROUGH IT AND PRODUCES A CRESENT FULL PRESSURE OF AIR FROM CLEAN WING PORT FORCES PATTERN IN DIRECTION OF CLOGGED SIDE. 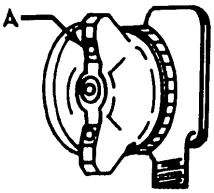	DISSOLVE MATERIAL IN SIDE PORT WITH THINNER. DO NOT POKE IN ANY OF THE OPENINGS WITH METAL INSTRUMENTS.
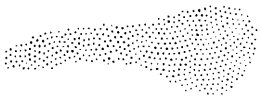	SPRAY PATTERN WIDER OR HEAVIER AT EITHER END IS CAUSED BY DRIED MATERIAL AROUND THE OUTSIDE OF THE FLUID NOZZLE TIP. B RESTRICTS THE PASSAGE OF ATOMIZING AIR AT ONE POINT THROUGH THE CENTER OPENING OF AIR NOZZLE AND RESULTS IN PATTERN SHOWN. THIS PATTERN CAN ALSO BE CAUSED BY LOOSE AIR NOZZLE. 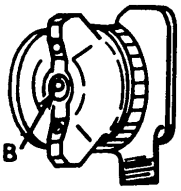	IF DRIED MATERIAL IS CAUSING THE TROUBLE, REMOVE AIR NOZZLE AND WIPE OFF FLUID TIP, USING RAG WET WITH THINNER. TIGHTEN AIR NOZZLE.

Figure 3-5. Faulty Patterns and Suggested Corrections (Sheet 1 of 2)

	A SPLIT SPRAY OR ONE THAT IS HEAVY ON EACH END OF A FAN PATTERN AND WEAK IN THE MIDDLE IS USUALLY CAUSED BY (A TOO HIGH AN ATOMIZING AIR PRESSURE, OR (B) BY ATTEMPTING TO GET TOO WIDE A SPRAY WITH THIN MATERIAL.)		REDUCING AIR PRESSURE WILL CORRECT CAUSE (A). TO CORRECT CAUSE (B), OPEN MATERIAL CONTROL TO FULL POSITION BY TURNING TO LEFT. AT THE SAME TIME TURN SPRAY WIDTH ADJUSTMENT TO RIGHT. THIS WILL REDUCE WIDTH OF SPRAY BUT WILL CORRECT SPLIT SPRAY PATTERN.

Figure 3-5. Faulty Patterns and Suggested Corrections (Sheet 2 of 2)

b. Coating Thickness Measurements. Wet and dry .lm gages are available as local purchase items from various laboratory or paint supply houses. If paint film thickness measuring instruments are not available, small (5 x 16 inches) anodized aluminum test panels will be employed for the measurement of the paint thickness after drying. These panels will be applied to each side of the fuselage prior to the painting operation. One end of the panel should be masked with tape for a distance of approximately two inches to provide a comparison of the original panel system. Removal of the panel after application of the epoxy primer is recommended so that immediate touch-up operations can be employed to cover those areas previously protected by the panel. This procedure will also permit relocating of the panel on various portions of the same aircraft to provide a good indication of the overall paint thickness application. The location of the panel is dependent upon inspection procedures and may vary throughout the aircraft. Each aircraft should possess a panel for each operator employed on the aircraft and it should be identified by the name of the operator, aircraft model, and the date of painting in order to provide follow-up data during any subsequent service evaluation. The panel is applied by the use of a small section of one-inch width masking tape doubled upon itself with the adhesive side contacting the panel and the aircraft surface. Slight errors in paint thickness measurement can exist due to thickness tolerances permitted by the basic aluminum procurement specification. This factor must be taken into consideration in the measurement of the thickness of the paint deposit. Measurement of the paint thickness is best accomplished by the use of an ordinary micrometer possessing flat contact surfaces when smooth textured paints are used. Micrometers possessing pointed or rounded contact surfaces are recommended when extremely rough textured paints are used. At least six readings should be taken on both painted and unpainted portions of each test panel to provide an average paint thickness measurement.

SECTION II PRIMERS

3-13. GENERAL.

a. Use, General. Primers are used on metals to provide a coating to which subsequent coatings will firmly adhere and provide protection for the substrate metal against corrosion. The pigment portion of primers for ferrous base metals usually consists of iron oxide, chromate, red lead, zinc chromate, zinc oxide, zinc dust, or a mixture of these. Zinc olstrontium chromate is the pigment in some primers used on substrates of magnesium, aluminum and their alloys. Other primers which are lead and chromate free are desirable for most applications and required in applications where lead and zinc chromate are prohibited.

b. Use, Aircraft. Primers are used as corrosion-inhibiting coatings on aircraft metal surfaces to inhibit corrosion and provide good adhesion for the topcoat. Primers will conform to Military Specification MIL-P-52192, MIL-PRF-23377 or MIL-PRF-85582.

3-14. PRIMERS.

a. MIL-PRF-23377 Primer. This is an epoxy polyamide primer furnished as a two- component kit wherein the two components are mixed prior to use. It is intended for application to clean aluminum and magnesium substrates. One component contains the pigment, mixed in an epoxy vehicle, while the other component consists of a clear polyamide solution which functions as a hardener for the epoxy resin. These components are packaged separately and have excellent storage stability. When mixed, storage life is eight hours. Only that amount which can be used in an eight hour period should be mixed.

b. MIL-P-85582 Primer. This is a water reducible two component epoxy primer intended for use on non-ferrous alloys where volatile organic emission is a problem.

c. MIL-P-53030 Primer. This is a water reducible epoxy primer for use on ferrous alloys where volatile organic emission is a problem.

d. MIL-P-53022 This is a lead and chromate free primer that may be used as an alternate to MIL-PRF-23377 on pretreated ferrous and non-ferrous metals.

SECTION III FINISH PAINTING: GENERAL

WARNING

ACETONE, ASTM-D329

Acetone is extremely .ammable and toxic to skin, eyes and respiratory tract. Wear protective gloves and goggles/face shield. Avoid repeated or prolonged contact. Use only in well-ventilated areas (or use approved respirator as determined by local safety/industrial hygiene personnel). Keep away from open flames, sparks, hot surfaces or other sources of ignition.

Failure to observe these precautions can result in serious injury or systemic poisoning of personnel.

3-15. MIL-DTL-64159 OR MIL-DTL-53039. The Army standard tactical topcoat for aircraft is fully described in Chapter 4. Acetone can be used to differentiate between acrylic lacquer (MIL-C-46159) and polyurethane (MIL-DTL-64159 or MIL-DTL-53039) or epoxy MIL-C-22750 coatings. Wipe the coating with a cloth saturated with acetone. Acrylic lacquer coating will be dissolved but properly cured MIL-DTL-64159 or MIL-DTL-53039 coating will not.

CARC MIL-DTL-64159 can be used as a replacement for MIL-C-46168 and MIL-DTL-53039 CARC topcoats.

3-16. MIL-PRF-85285 COATING: POLYURETHANE, HIGH SOLIDS.

a. Use. This aliphatic urethane finish is formulated for protection of areas exposed to chemicals and solvents and is intended for exterior or interior use on aircraft and other applications. It is a two component paint with a highly weather-resistant gloss finish used as a topcoat over epoxy primers, MIL-PRF-23377 and MIL-PRF-85582. It may be used in areas where air pollution regulations are in force. This finish is intended for use by exception only in accordance with the provisions of Chapter 5.

b. Top Coat (Mixing and Thinning). Consult MIL-PRF-85285 or paint manufacturer's instructions.

c. Application.

(1) Clean per Chapter 2, Section I.

(2) Strip old finish (if needed) per Chapter 2, Section II.

(3) Apply metal conditioning per Chapter 2, Section III.

(4) Apply primer per Chapter 3.

(5) Apply paint per MIL-PRF-85285 or manufacturer's instructions.

(6) Apply a full wet coat to dry filn, thickness of 1.0 to 1.5 mils.

d. Touch-up of Polyurethane System. Closely inspect candidate areas for extent of damage and/or touch-up required. If inspection reveals major paint or primer failure or damage, such as chipped or peeled paint from the center of a skin panel, the involved skin section should be prepared and touched up from seam to seam. If only minor damage is found, e.g., paint chipped or missing from screw/rivet heads and on outer edges of skin panel(s) the specific area may be prepared and touched up. Prepare damaged area(s) and paint as follows:

(1) Thoroughly clean area to be repainted.

(2) Feather edges of coating adjacent to peel section and scuff sand the other area(s) to be coated. Use 280 grit paper or nylon abrasive matting, Military Specification MIL-A-9962, very fine for scuff sanding.

(3) Solvent wipe scuffed area(s) with thinner, Military Specif cation MIL-T-19588.

(4) Apply one thin coat of epoxy primer, Military Specif cation MIL-PRF-23377 on area to be touched up.

(5) Apply one full wet coat of thoroughly mixed polyurethane topcoat. If required, apply a second coat after allowing 1 to 4 hours curing period for the f rst coat.

(6) Touch up shall be accomplished with brush and rollers only in open areas.

NOTE

This must be accomplished with full adherence to provisions of health and safety cited elsewhere and herein.

3-17. INSPECTION.

a. Waterbreak Test. See Paragraph 3-4.

b. Viscosity Test. See MIL-F-18264.

c. Test Panel. Prior to spraying operations, the suitability of materials for the entire system shall be determined experimentally on a panel approximately 10 to 32 inches in size. The panel shall be coated under prevailing conditions with the f nish system that is to be applied. If the f nish system applied to the experimental panel is satisfactory, full scale operations may begin. Defects found in the experimental application such as blushing, poor adhesion, excessive orange peel, sagging, etc, shall be corrected prior to large scale application.

NOTE

MIL-F-18264 is inactive for new design. Inactive for new design notice. An inactive for new design notice shall be prepared to indicate that an item covered by a specif cation or specif cation sheet is prohibited from being used in new design and is used only in existing equipment or for future contracts to buy more of existing equipment. Structures division. MIL-F-18264, while inactive, still applicable for existing equipment.

d. Adhesion Test. See MIL-F-18264.

e. Gloss Test. (Not applicable to MIL-DTL-64159 or MIL-DTL-53039 paints). See MIL-F-18264.

f. Smoothness Test. See MIL-F-18264.

g. Film Thickness Test. See paragraph 3-12.

3-18. MIL-DTL-53039

a. MIL-DTL-53039 is a aliphatic polyurethane, single component, chemical agent resistant coating (CARC) used as a f nish coat on tactical equipment. It is a moisture cured f nish which is lead free and chromate (hexavalent) free, and has a maximum voc of 420 gm/1 (3.5 lbs/gallon) volatile organic compounds. This coating is applied over epoxy primers MIL-P-53022, MIL-P-53030 or MIL-PRF-85582. It can be applied over a CARC basecoat which is thoroughly cleaned and is at least set to touch or completely cured. It should not be applied over an existing alkyed or lacquer f nish.

b. Top coat (mixing and thinning). Consult MIL-DTL-53039 or paint manufacturer's instruction.

c. Application.

(1) Clean per Chapter 2, Section I.

(2) Strip old f nish (if needed) per Chapter 2, Section II.

(3) Apply metal conditioning per Chapter 2, Section III.

(4) Apply primer per Chapter 3.

(5) Apply paint per MIL-DTL-53039 or manufacture's instructions.

d. Touch up of polyurethane system. If the old f nish is in good condition, clean the surface with MIL-T-81772 thinner, to remove all contaminates such as grease, oil or fuel residue, and apply the topcoat. Areas sanded down to bare metal shall be pretreated, primed and then topcoated. Scratches or light damage to top coat will have to be scuff sanded at the damaged area. Prepare damage area and paint as follows:

(1) Clean area to be painted.

(2) Mask or tape the area to be repaired or touched up per Chapter 3, Section I.

(3) Scuff sanded area to be painted.

(4) Wipe down area to be painted with a clean rag wet with MIL-T-81772 thinner to remove loose sanding debris and f ngerprints.

(5) Apply evenly one coat of epoxy primer over the area to be touched up. Allow epoxy primer to dry a minimum of 1 hour or until dry to touch before topcoating.

(6) Apply topcoat evenly to blend with the original surface around the area to be touched up. The total thickness of previous coating shall be checked prior to reworking. The coating thickness, existing plus rework, shall not exceed a dry f lm thickness of 1.8 mils. MIL-DTL-53039 will dry set to touch in approximately 15 minutes, dry hard in 90 minutes, dry through in four hours, with a complete cure in seven days. At 60°F (16°C), MIL-DTL-53039 requires twice as long to cure.

(7) Touch up shall be done in open areas when using brushes or rollers.

Table 3-1. Manual Spray Coating Troubles, Possible Causes, and Remedies

TROUBLE	POSSIBLE CAUSES	PREVENTIVE MEASURES OR REMEDIES
Sags and runs	1. Dirty air cap and fluid tip (distorted spray pattern).	1. Remove air cap and clean tip and air cap carefully.
	2. Gun stroked too close to the surface.	2. Maintain 6 to 10 inches distance from surface.
	3. Trigger not released at end of stroke (when stroke does not go beyond object).	3. Release the trigger after every stroke.
	4. Gun stroked at wrong angle to surface.	4. Keep gun at right angle (perpendicular) to surface during stroke.
	5. Coating material too cold.	5. Heat material by approved methods.
	6. Coating piled on too heavy.	6. Develop ability to apply thicknesses by panel practice.
	7. Coating material thinning too much.	7. Add the correct amount of solvent by measure or determined by viscosity test.
	8. Incomplete mixture of components.	8. Continuous agitation of mixture.
	NOTE Pot life must be considered when using plural component paint. Pot life is approximately 8 hours after mixing. Serious gelation occurs after 6 hours, at which point viscosity will impede the flow and ultimately completely stop the system. It is recommended that the system be flushed after 6 hours to preclude damage to the system.	
Streaks	1. Dirty air cap and fluid tip (distorted spray pattern).	1. Remove air cap and clean tip and air cap carefully.
	2. Insufficient or incorrect overlapping strokes.	2. Follow the previous stroke accurately. Deposit a wet coat.
	3. Gun stroked too rapidly (dusting of the paint).	3. Avoid whipping. Make deliberate, slow strokes.
	4. Gun stroked at wrong angle to surface.	4. Keep gun at right angle (perpendicular) to surface during stroke.
	5. Stroking too far from surface.	5. Maintain 6 to 10 inches from surface.
	6. Too much air pressure.	6. Use least air pressure necessary.
	7 Split spray.	7 Clean the fluid tip and air cap.
	8. Coating material too cold.	8. Heat material to get good flow-out. (Use authorized heat methods).
Paint will not come from spray gun	1. Out of paint (gun begins to sputter).	1. Add paint, correctly thinned out and strained.

Table 3-1. Manual Spray Coating Troubles. Possible Causes. and Remedies — (Continued)

TROUBLE	POSSIBLE CAUSES	PREVENTIVE MEASURES OR REMEDIES
Paint will not come from pressure tank	1. Lack of proper air pressure in the pressure tank	1. Check for leaks or lach of air entry.
	2. Air intake opening inside of pressure tank lid, clogged by dried rnaterial.	2. This is a common trouble. Clean the opening periodically
	3. Leaking gaskets on tank cover	3. Replace with a new gasket.
Paint will not come from suction CUP	1. Dirty fluid tip and air cap.	1. Remove all air cap and clean tip and air cap carefully
	2. Clogged air vent on cup cover.	2. Remove the obstruction.
	3. Using wrong air cap.	3. Ascertain and use correct setup.
	4. Leaky connections on fluid tube or nozzle.	4. Check for leaks under water and repair.
Excessive material loss	1. Not triggering the gun at each stroke.	1. It should be a habit to release trigger after every stroke
	2. Stroking at wrong angle to surface.	2. Gun should be stroked at right angles to surface.
	3. Stroking gun 100 far from the surface.	3. Stroke the gun 6 to 10 inches from the surface.
	4. Wrong air cap or fluid tip.	4. Ascertain and use correct setup.
	5. Depositing a film of Irregular thickness.	5. Learn to calculate the depth of wet film of finish and develop control.
	6. Air pressure too high.	6. Use the least amount of air necessary.
	7. Fluid pressure too high.	7. Reduce pressure. If pressure keeps climbing. clean regulator on pressure tank.
	8. Coating material too cold.	8. Heat to enable reduced air pressure. (Use authorized heat methods)

Table 3-1. Manual Spray Coating Troubles, Possible Causes, and Remedies — (Continued)

TROUBLE	POSSIBLE CAUSES	PREVENTIVE MEASURES OR REMEDIES
Paint leaks from spray gun	1. Fluid needle packing nut too tight.	1. Loosen nut, lubricate packing.
(figure 3-7)	2. Packing for fluid needle dry.	2. Lubricate this part daily.
	3. Foreign particle blocks fluid tip.	3. Remove tip and clean.
	4. Damaged fluid tip or needle.	4. Replace both tip and needle.
Gun sputters constantly	1. Fluid nozzle not tightened to the spray gun.	1. Tighten securely, using a good gasket.
(figure 3-8)	2. Leaking connection of fluid tube	2. Tighten connections: lubricate packing.
	3. Fluid pipe not tightened to the pressure tank lid.	3. Tighten. Check for defective threads.
Orange peel (single component only)	1. Coating material not thinned out sufficiently.	1. Add the correct amount of solvent by measure or viscosity test.
(figure 3-9)	2. Coating material too cold.	2. Heat material to get flow-out. (Use authorized heat methods)
	3. Not depositing a wet coat.	3. Check solvent. Use correct speed and overlap of stroke.
	4. Gun stroked too rapidly (dusting the paint).	4. Avoid whipping. Take deliberate, slow strokes.
	5. Insufficient air pressure.	5. Increase air pressure or reduce fluid pressure.
	6. Using wrong air cap or fluid nozzle.	6. Select correct air cap and nozzle for the material and feed.
	7. Gun stroked too far from the surfaces.	7. Stroke the gun 6 to 10 inches from surface.
	8. Overspraying striking a previously sprayed surface.	8. Spray detail parts first. End with a wet cloth.
Wrinkling (Figure 3-11)	Caused by applying too thick a coating: this prevents uniform drying of the coat and thus results in formation of ridges and fumes.	Material should be applied in thin uniform coats. If a thicker coating is necessary, it should be applied by spraying several thin coats until the desired thickness is obtained. (Allow each coat to set before applying the next when using simple component paints.)
Crazing, cracking checking (figure 3-12 and 3-13)	1. Painting over a hard glossy coat. A base coat of this condition offers a poor surface adhesion of subsequent coats. In drying, the topcoat slides over the base coat, breaking out in cracks.	1. Remove all previous coats of paint using paint remover or approximately treat surface to attain good adhesion.

Table 3-1. Manual Spray Coating Troubles, Possible Causes, and Remedies — (Continued)

TROUBLE	POSSIBLE CAUSES	PREVENTIVE MEASURES OR REMEDIES
These three defects are all very similar in that they all consist of surface cracks on varying degrees. Crazing is a fine surface crack while cracking and checking often extend to the metal surface.	2. Excessive amount of drier in paint causing brittleness.	2. Drier should be used only as recommended by manufacturer of material being used. 3. Heat lamps are not required on two component paints.
Slow drying of wash primer	Accidental addition of Federal Specification TT-T-266 thinner; excessive butyl alcohol addition; high humidity conditions, excessive thickness; denaturants in the alcohol such as oils, high boilers, etc. introduced by the accidental use of the wrong alcohol.	1. Employ enzymatic cleaners to clear surface of chemical residuals. 2. Check mix, using smaller quantities of same batch, apply to test panel; modify quantity of thinner added and compare drying times under actual painting conditions; incorporate use of small test panel adjacent to all aircraft during complete painting procedures, using such panel for thickness measurements also.
Pinhole cavities	Improper surface treatment or lack of surface treatment (on magnesium); entrapped oils and/or solvents; insufficient primer drying times; excessive alcohol additions to wash primer; use of improper thinner.	Apply manual surface treatment and insure complete coverage of the magnesium with surface chemical film, before wash primer application; microscopic examination of stripped paint removed during tape test; check mixing instructions to eliminate use of improper thinners.
Excessive blushing of topcoats	Excessive humidity on surface.	Check humidity control equipment where employed when using acrylic paint.
Dry Lacquer Film	High temperature and low humidity while spraying	Add Specification MIL-E-7125 Acrylic Retarder.
Peeling and blistering	1. Failure to remove moisture, oil or grease from the surface before the finish is applied.	1. Strip, thoroughly clean and if necessary sand down add air dryer, if needed and repaint.
	2. Moisture in lines.	2. Drain lines periodically.
(figure 3-14)	3. Trapped solvents.	3. Use proper thinner.
Inconsistent coloring	Pigments not evenly distributed as a result of settling or insufficient mixing.	Apply additional coats after thoroughly mixing the finish material. Do not exceed dry film tolerance. Maintain continuous agitation of paint material mixture, particularly rough texture material.
Wet areas	This is an indication that oil, grease, wax, soap, etc. which may have been on the surface previous to application of paint, had not been properly removed.	Clean all surfaces thoroughly with approved type cleaners.

Table 3-1. Manual Spray Coating Troubles. Possible Causes, and Remedies – (Continued)

TROUBLE	POSSIBLE CAUSES	PREVENTIVE MEASURES OR REMEDIES
Failure of wet tape test	Insufficient drying time on wash primer and/or epoxy primer: Insufficiently cleaned surface: cleaning compound residue. etc. Oil seepage throughout inspection doors and blind rivets (especially jet aircraft) entrapped oils and soil in epoxy shop primer: excessively aged primer: insufficient removal of shop primer and/or previous coatings: use of final finishes incorporating wax ingredients: use of laundered rags instead of new mill ends: use of water-sensitive primer not conforming to specification requirements: seepage of water containing cleaning compound residues from between fraying surfaces.	Employ initial wipedown. using safety solvent followed by thinner as an auxiliary cleaner. Rinse with clear clean water when enzymatic cleaner is used: remove all shop primers to provide a clean surface prior to any coating: primer shop coat elirnination preferred as 011 removal from shop primer coats practically Impossible. employ sol vent-dampened cloths in lieu of dry cloths for removal of oil contamination. Allow aircraft to stand for a sufficient time to permit drainage of effluent before final cleaning note the type of failure. such as to bare metal or intercoat failure. and select the applicable cause and remedy accordingly.
Lifting	1. Absorption of solvents by previous partially dried film.	1. Allow coal to dry before recoating. (Applicable only to single component paint.)
(figure 3-16)	2. Second coats apt 10 lift if poorly prepared surface.	2. Begin with properly prepared surface
		3. Use compatible coatings and thinners
Pitting or cupping	1. Rust under surface.	1. Drain lines periodically.
	2. Oil or grease on surface.	2. Use proper thinner proportions.
(figure 3-17)	3. Moisture in lines.	3. Strip and clean: or sand down and repaint
	4. Trapped solvents.	
	NOTE Do not mix materials and/or components of different manufacturers.	
Excessive spray fog	1. Too high air pressure.	1. Use least amount of air pressure necessary
(figure 3-6)	2. Spraying past surface of the product.	2. Release trigger when gun passes target.
	3. Wrong air cap or fluid tip.	3. Ascertain and use correct setup
	4. Gun stroked too far from the surface.	4. Stroke the gun 6 to 10 inches from surface
	5. Material thinned too much.	5. Add the correct amount of solvent by meassure or test.
Sandpaper finish	1. Unsatisfactory wash primer or primer.	1. Laboratory analysis to verify acceptability of the material: check wash primer and primer application procedures.
(figure 3-10)	2. Excessive dirt contamination from painting area.	2. Provide cleaner painting areas.
	3. Insufficient scuff-sanding of wash primer or primer.	3. Scuff-sand wash primer using No 320 and wet-or-dry abrasive. paper P-C-451.
	4. Improperly cleaned paint lines.	4. Flush paint lines frequently with solvent.

Table 3-1. Manual Spray Coating Troubles. Possible Causes. and Remedies — (Continued)

TROUBLE	POSSIBLE CAUSES	PREVENTIVE MEASURES OR REMEDIES
	5 Dried overspray.	5. Sand the complete finish until smooth to the fingertips.
Paint will not come from spray gun	1. Settled. caked pigment or gelling paint blocking gun ttp.	1. Remove obstruction. stir paint thoroughly.
	2 Grit. dirt. paint skins. etc. blocking gun lip. fluid valve or strainer.	2. Clean spray gun thoroughly and strain the coating material. Always strain materials before using.

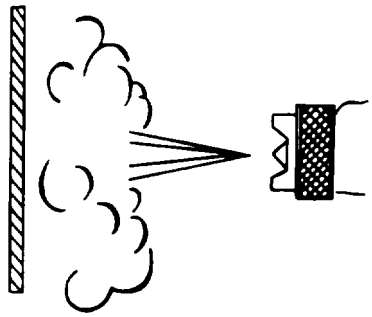

Figure 3-6. Excessive Spray Fog

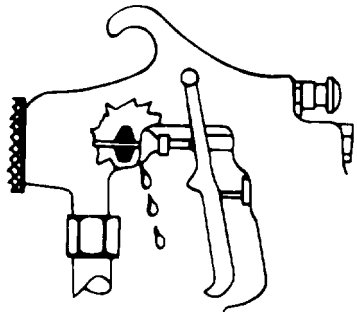

Figure 3-7. Paint Leaks From Spray Gun

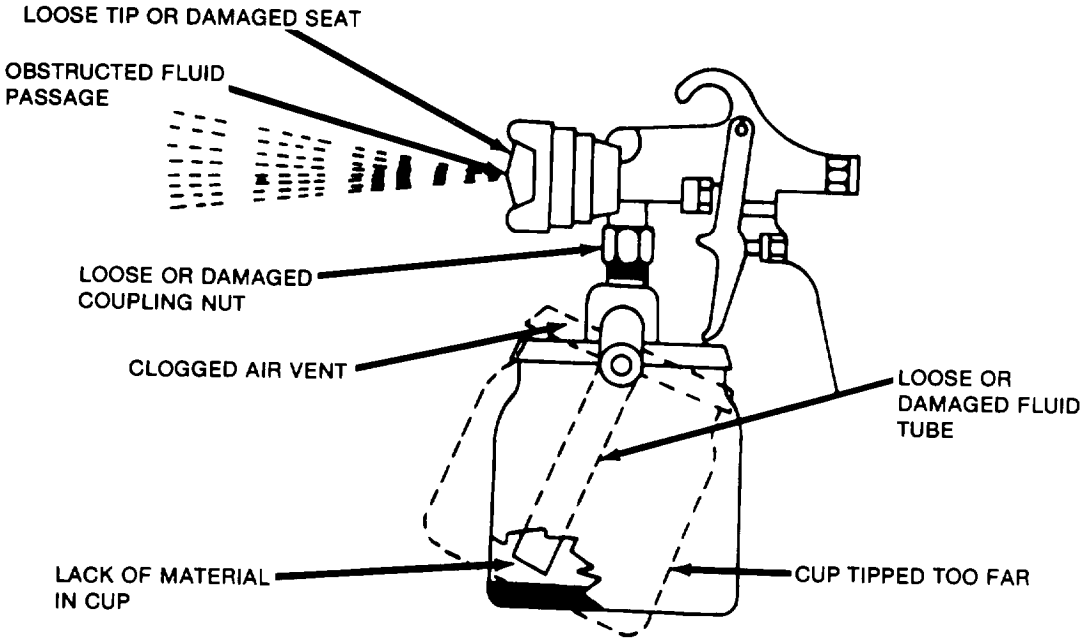

Figure 3-8. Gun Sputters Constantly

Figure 3-9. Orange Peel

Figure 3-10. Sandpaper Finish

Figure 3-11. Wrinkling

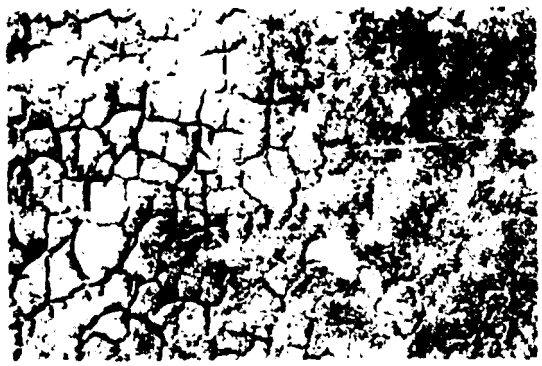

Figure 3-12. Crazing

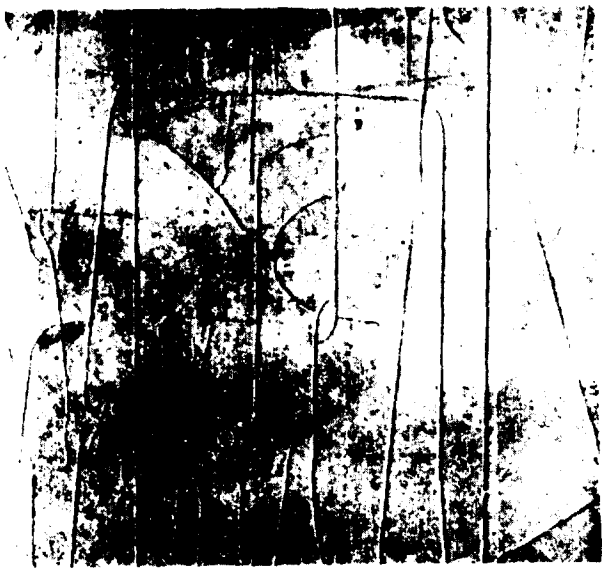

Figure 3-13. Checking

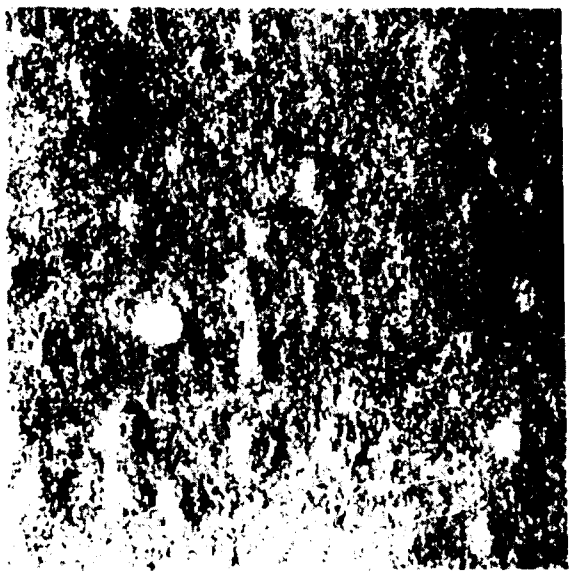

Figure 3-14. Blistering

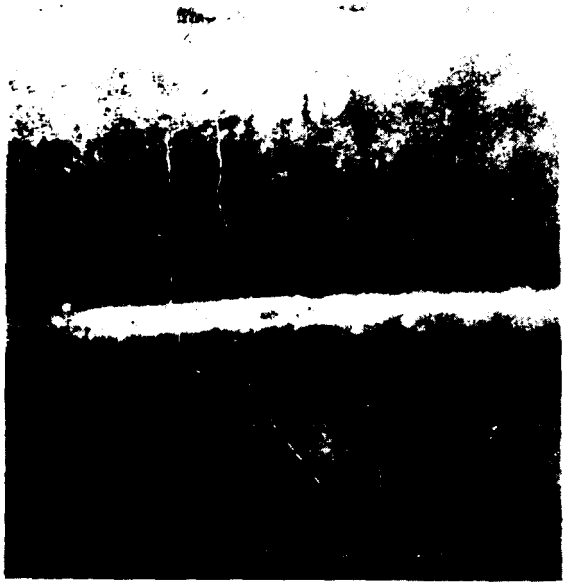

Figure 3-15. Fish-Eyes and Poor Wetting, Crawling, Poor Flowout

Figure 3.16. Lifting

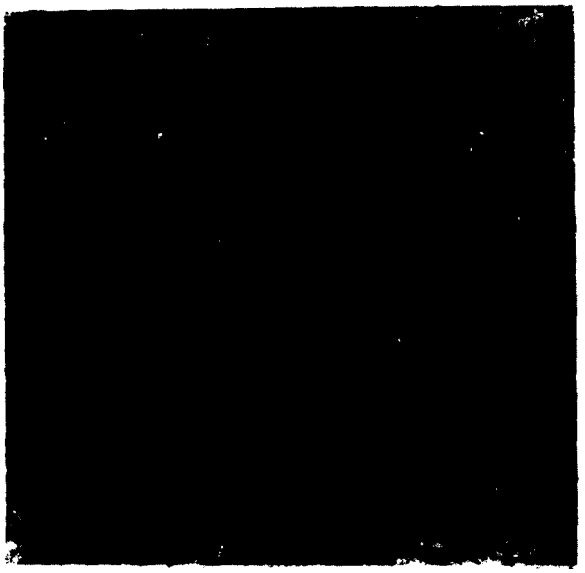

Figure 3-17. Pitting or Cupping

3-19. TOUCH UP OF CONDUCTIVE COATING ON UH-60 COCKPIT DOOR. The UH-60 cockpit doors are bonded assemblies made of Kevlar. The doors are coated with conductive coating, Choshield-2002, for EMI shielding. Scratches or light damage to conductive coating will have to be scuff sanded at the damage area. Repair damaged area and paint as follows:

WARNING

Volatile and toxic fumes occur when using solvents, causing both a .re and a health hazard.

Provide proper ventilation and protective clothing, including eye shield, when using solvents. Avoid breathing vapors and skin contact as much as possible. Wash contacted skin with soap and water. If solvent contacts eyes, flush them with clean water and get immediate medical help.

CAUTION

To prevent damage to Kevlar laminate, do not allow solvents to contact exposed fibers. Do not allow solvents to remain in contact with Kevlar laminate.

a. Lightly sand damaged area using 280 grit abrasive cloth.

b. Wipe damaged area with solvent, MIL-T-81772 Type 3, to remove surface contamination.

c. Apply one coat of epoxy primer, MIL-PRF-23377. Allow primer to dry at least one hour to eight hours.

d. Conducting coating can be thinned to spray viscosity with thinner MIL-T-81772.

e. Apply three coats of conductive coating, P/N Choshield-2002, to make 0.003 to 0.004 inch thick coat. Allow 1/2 hour minimum drying time between coats.

f. After the last coat, the conductive coating shall be allowed to dry for one hour minimum.

g. Apply top coat evenly to blend with original surface around the area to be touched up. The top coat thickness shall not exceed a dry film thickness of 1.8 Mils.

h. Touch-up shall be done in open areas when using brushes or rollers.

CHAPTER 4
TACTICAL PAINT SCHEME

SECTION I HELICOPTERS

4-1. GENERAL.

a. The coating system and painting scheme in this section is the Army standard for tactical helicopters. The finish coat provides a lusterless, low visibility and low reflectance surface in various military conditions.

b. This aircraft green topcoat conforms to MIL-DTL-64159 or MIL-DTL-53039. This topcoat is to be applied over primer conforming to MIL-PRF-23377 or MIL-P-85582. Advantages of MIL-DTL-64159 or MIL-DTL-53039 top coating are its properties of resistance to chemical agents, increased abrasion and impact resistance, improved exposure and weathering performance and superior longevity.

c. Aircraft green paint, MIL-DTL-64159 or MIL-DTL-53039, is rougher textured than most paints. This is intended, pursuant to achieving low reflectivity requirements.

4-2. EXTERNAL AREAS NOT TO BE PAINTED.

a. Areas Not to be Painted (General). Do not prime or apply any paint to any of the following exterior surfaces:

(1) Light lenses, windows, and windshields.

(2) Wires and cables (electrical).

(3) Areas containing slippage or tolerance marks unless the slippage or tolerance marks can be retained (1/2" masking tape may be used to cover marks).

(4) Rubber and cloth boots and dust covers.

(5) De-icing boots.

(6) Reinforced impregnated flexible ducting.

(7) Plastic or ceramic insulators for radio antennas.

(8) Rods that move in and out of hydraulic cylinders, on portions contacting a mating surface. Non-contact surfaces will be coated.

(9) Piston portion of landing gear struts and shimmy damper, where surfaces are mated.

(10) Interior and opening of pitot tube.

(11) Pitot static opening.

(12) Static ground receptacle.

(13) All bearings, races, and rod ends. Apply masking over, and 3/4 inch beyond, bearings, races, and rod ends. Masking will be snug and complete to prevent any spray from entering bearings, races, and rod ends.

(14) All hydraulic fittings. Apply masking to cover fittings and about one inch of tubes.

(15) Ambient air thermometer probe.

(16) Required conspicuity markings.

(17) Previously unpainted Aircraft Survivability Equipment.

b. Deleted

4-3. PREPARATION OF MIL-DTL-64159 OR MIL-DTL-53039 POLYURETHANE PAINT.

a. Polyurethane, MIL-DTL-64159 or MIL-DTL-53039 paint is a plural component, low reflective paint formulated to be lead and chromate free. The components of this paint must be thoroughly mixed prior to pouring into the application container when transfer is necessary. Care should be taken that all of the pigment matter has been included in the mixture.

b. Mixing and application equipment. Mixing requirements for the two component polyurethane paint, when applying by conventional air atomized or airless spray is to mix four parts of Component A, which is the polyester portion, to one part of Component B, which is the catalyst or isocyanate portion. After the two components are mixed, the total mixture is left to stand for at least 30 minutes to deaerate. The mixture (batch) is then thinned to the proper viscosity depending upon the spray equipment. The mix at the specified ratio will produce a pot life of eight hours. Therefore, no more paint should be mixed than can be used in an eight hour shift or period.

c. MIL-DTL-64159 or MIL-DTL-53039 paint must be thinned to spraying viscosity, determined by the user and the type of spraying equipment to be used. A suggested starting point is obtained by mixing approximately four volumes of mixed MIL-DTL-64159 or MIL-DTL-53039 paint and one volume of MIL-T-81772 thinner. The paint must be thoroughly mixed with the thinner and continuously agitated during application.

d. Where quantities permit, and to eliminate the 30 minute deaeration time and potential waste, plural component spray units can be used which automatically and proportionally mix the two components directly at the spray gun nozzle. Since the two components are kept separate, the pot life consideration is also eliminated.

e. The polyurethane paint can also be applied by conventional, airless, or electro-static spray equipment. In cases where this type of equipment is used, the viscosity can change. The applicator should check with the paint company and equipment supplied for the exact criteria for viscosity, thinning and the best application processes.

f. Whatever spray equipment is used, it is necessary that all spray guns, lines and nozzles, when applicable, be thoroughly cleaned after use to prevent hardening of the coating system. If the coating hardens in the system, the system cannot be cleaned. That portion of the unit in which the paint has gelled or hardened, must be discarded.

g. MIL-DTL-64159 or MIL-DTL-53039 paint may be applied over a wide range of temperatures. Temperatures from 50° F (24° C) to 90°F (32° C) are recommended for best results.

NOTE

MIL-DTL-64159 or MIL-DTL-53039 paint is a catalytic paint and will cure under most atmospheric conditions after application. However, at very low temperature, curing is retarded.

h. Test the mixture, pressure and spray equipment settings by applying a test coating to masking paper or similar smooth surfaces prior to application to aircraft or components. Adjust paint and/or equipment until proper test coating is achieved. Paint and equipment are then ready for application to aircraft or components.

4-4. PROCEDURES FOR APPLICATION OF MIL-DTL-64159 OR MIL-DTL-53039 PAINT TO BARE METAL SUBSTRATES. The total paint system for the polyurethane coating as with all other paint systems, requires cleaning, a pretreatment coating, an anticorrosive primer and the polyurethane topcoat. This applies to painting of bare metal substrates.

a. Cleaning. The substrate should be thoroughly cleaned of all oil, grease and other contaminants by appropriate methods cited elsewhere herein or as specified in TT-C-490.

b. Pretreatments. TT-C-490 finishing documents e.g., MIL-STD-193, MIL-STD-186, MIL-T-704, etc., provide appropriate directions for surface preparation. For steel substrates, the pretreatments to use are zinc phosphate or wash primer conforming to DOD-P-15328. For aluminum, substrates, the pretreatment is alodine, MIL-C-5541.

c. Anticorrosive Primers. The anticorrosive primers to be used with the MIL-DTL-64159 or MIL-DTL-53039 paint system are the epoxy type. The epoxy primer to use with steel substrates is MIL-P-52192 and for aluminum and magnesium substrates is MIL-PRF-23377, or MIL-P-85582.

d. Topcoat. MIL-DTL-64159 or MIL-DTL-53039 coating is applied at 1.8 to 3.0 mils dry film thickness in two coats. The first should be applied in one to four hours of the application of the primer. The second coat may be applied within a few minutes of the first coat or anytime thereafter. The total thickness of the topcoat should not exceed 3.0 mils. There is no maximum time between application of the first and second coats, ideally within two hours. No surface preparation, except for cleaning, will be necessary as long as the surface has not become contaminated, e.g., with dirt or grease. MIL-DTL-64159 or MIL-DTL-53039 coating fully cures in 7 days.

e. MIL-DTL-64159 CARC topcoat is a alternate to CARC MIL-DTL-64159 or MIL-DTL-53039. MIL-DTL-64159 has been evaluated and approved for use by the AMRDEC Materials Branch, Structures and Materials Division.

SECTION II FIXED WING AIRCRAFT

4-5. GENERAL. The tactical paint system is a three-coat system consisting of a chemical conversion coating applied to bare metal, followed by an intermediate primer coat, MIL-PRF-23377 or MIL-P-85582 and then finish-painted with a lusterless topcoat.

4-6. MATERIALS.

a. The chemical conversion coating will conform to MIL-C-5541 for aluminum and MIL-M-3171 for magnesium.

b. Intermediate primer will conform to Military Specification MIL-PRF-23377 or MIL-P-85582

c. Aircraft Gray paint will conform to Military Specification MIL-DTL-64159 or MIL-DTL-53039. For exceptions to aircraft gray, see Chapter 5.

4-7. PROCEDURE.

a. Clean and prepare aircraft surfaces for painting in accordance with Chapter 2.

b. Apply chemical conversion coating in accordance with manufacturer's instructions.

c. Apply primer in accordance with the applicable specification.

d. Apply finish coats in accordance with instructions relating to application of MIL-DTL-64159 or MIL-DTL-53039 polyurethane coating.

SECTION III MARKINGS

4-8. GENERAL. All markings, letterings, and numerals, including the identification lettering UNITED STATES ARMY, and radio call numbers, will be applied with Aircraft Black #37038 in compliance with instructions in Chapters 7, 8, 9 and 10. As an alternate, black lusterless enamel may be used, overcoated with a clear polyurethane in accordance with MIL-DTL-64159 or MIL-DTL-53039.

SECTION IV PROPELLER ASSEMBLIES AND BLADES

4-9. GENERAL. Details of the color scheme for propeller assemblies are in Chapter 6.

SECTION V AIRCRAFT COMPONENTS

4-10. GENERAL. Aircraft components that are installed on an aircraft will be painted as follows:

a. New components shall be processed with MIL-PRF-23377 or MIL-P-85582 primer and painted with Interior Aircraft Gray #36231, per MIL-DTL-64159 or MIL-DTL-53039 or Aircraft Black #37038, per MIL-DTL-64159 or MIL-DTL-53039 (as indicated in paragraph 1-5b) or MIL-C-22750 of the same color.

b. Recycled components shall be oversprayed with a mist coat of MIL-PRF-23377 or MIL-P-85582 unless condition of primer indicates a necessity for stripping to bare metal, at which time the item will be completely refinished. MIL-DTL-64159 or MIL-DTL-53039 or MIL-C-27750 paint shall be applied as the top coat.

c. Zinc chromate shall not be used as a primer, unless it is subsequently oversprayed with MIL-PRF-23377 or MIL-P-85582.

d. Previously painted surfaces of Aircraft Survivability Equipment will be painted. Caution shall be taken to avoid any coating of radiating or receiving surfaces or windows of this equipment.

SECTION VI APPLICATION TO PREVIOUSLY PAINTED SURFACES (ROTARY AND FIXED WING)

4-11. GENERAL. MIL-DTL-64159 or MIL-DTL-53039 polyurethane paint must be applied over properly prepared subsurfaces. This paint shall not be applied over topcoats other than MIL-DTL-64159 or MIL-DTL-53039 painted equipment. Because of weight considerations, overcoating over MIL-DTL-64159 or MIL-DTL-53039 paint shall be restricted to small areas.

4-12. TOUCH UP AND REPAIR WITH MIL-DTL-64159 OR MIL-DTL-53039. If there is not extensive damage to the paint and touch up is for cosmetic purposes only or to cover up areas that are slightly marred or scratched, a supplemental polyurethane coating may be applied over the existing polyurethane finish. This must be done only on small areas and must be accomplished by brush application. No special surface preparation is necessary except for cleaning. If a small area is broken or damaged down to the substrate material, that area must be sanded, reprimed and topcoated. See paragraphs 4-3 and 4-4.

4-13. TOUCH UP AND REPAIR WITH MIL-DTL-64159 OR MIL-DTL-53039. Aircraft which are totally painted with MIL-DTL-64159 or MIL-DTL-53039 paint must be touched up using MIL-DTL-64159 or MIL-DTL-53039. No special surface preparation is necessary except for cleaning. If a small area is broken or damaged down to the substrate material, that area must be sanded, reprimed and topcoated. The epoxy primer to use with steel substrates is MIL-P-52192 and for aluminum and magnesium substrates is MIL-PRF-23377 or MIL-P-85582. See Chapter 3, Section II, "Primers" for details on primer use and application. Extensive topcoat areas may be repaired by renewing the topcoat over existing primer if the primer is in good condition.

4-14. PREPARATION OF MIL-DTL-64159 OR MIL-DTL-53039.

a. Low reflective paint, MIL-DTL-64159 or MIL-DTL-53039, must be thoroughly mixed in the original container prior to pouring into the paint application container.

NOTE

Paint application equipment must be clean prior to first use of MIL-DTL-64159 or MIL-DTL-53039. Halts of 5 minutes or longer duration during application will require flushing of the paint lines and spray gun to remove dried particles prior to restarting application.

b. Thoroughly mixed paint, MIL-DTL-64159 or MIL-DTL-53039, with appropriate thinner and retarder (as required) should be poured into the paint application container only in quantities required for use that day.

NOTE

IMMEDIATELY after adding paint and thinner/retarder, agitation should be started and operated for 1 to 3 hours prior to paint application. Paint agitation should be continuously maintained on liquids in the paint application container.

c. MIL-DTL-64159 or MIL-DTL-53039 must be thinned to spraying viscosity. A suggested starting point is obtained by mixing one volume of MIL-DTL-64159 or MIL-DTL-53039 with approximately one and one-half volumes of thinner composed of MIL-T-81772, Type III. The exact thinning ratio must be determined by the user and adjusted to the prevailing temperature and relative humidity. An acceptable alternate thinner consists of 2 parts by volume toulene (TT-T-548) and 1 part by volume xylene (ASTM D846). The exact ratio of thinner to paint must be determined by user and adjusted to the prevailing temperature and relative humidity.

d. MIL-DTL-64159 or MIL-DTL-53039 may be applied over a wide temperature range of 40 °F (24°C) to 90 °F (32 °C), and wide humidity range of 15 to 70%. High temperature and/or low humidity may result in dry spraying. High temperature and/or high humidity may result in blushing. To prevent these conditions and to provide a satisfactory finish, MIL-E-7125, Ethylene Glycol Monoethylether Acetate (cellosolve acetate or commercial equivalent such as Sherwin-Williams R7K206) may be required to first and second coat, and should be added. Add up to 30% acrylic retarder (MIL-E-7125 or commercial equivalent) as required, depending on temperature and humidity. (The higher the temperature and/or humidity, the more retarder required.)

e. Test the mixture, pressure and spray settings on masking paper or similar smooth surfaces prior to aircraft application to assure proper pigment disbursement. Large solids in test spray are indicative of dry spray and/or insufficient mixing. Add thinner, retarder and/or mix for a longer period of time, and retest as required to attain smoothest possible surface finish.

4-15. PROCEDURES FOR APPLICATION OVER PROPERLY PREPARED SURFACES.

a. Apply two coats of MIL-DTL-64159 or MIL-DTL-53039 lacquer to a dry film thickness of about 1.5 mils.

b. Apply first coat in continuous over-lapping strokes. Going back over partially dried areas will cause excessive surface roughness.

c. Allow first coat to air dry for approximately thirty minutes. Remove all dust and dry overspray by lightly wiping with a lint free cloth and blowing with clean air. Apply second coat as in b above. After two coats, film thickness should be approximately 1.5 mils.

d. MIL-DTL-64159 or MIL-DTL-53039 will dry sufficiently to be touched in approximately thirty minutes and will dry sufficiently for flight in approximately four hours. Markings may be reapplied at any time after the paint is dried.

e. Do not reapply black paint to anti-glare areas because MIL-DTL-64159 or MIL-DTL-53039 is sufficiently dark to act as anti-glare. Application of heat resistant paint on the fuselage is not required.

f. When required, the low reflective paint and epoxy primer may be stripped by applying MIL-R-81294, remover, paint epoxy, and polyurethane systems.

CHAPTER 5
NON-TACTICAL PAINT SCHEMES

SECTION I GENERAL

5-1. SCOPE. This chapter is limited to non-tactical paint schemes for specific geographic locations and missions other than tactical. Non-tactical paint schemes were developed to provide high visibility in congested areas, to enhance post-crash survival in hazardous terrain, or to identify a specific mission of an aircraft. The information in this chapter is provided to help the major Army field commanders, with authorized deviations, to select the appropriate paint scheme commensurate with the aircraft mission and location. In most cases, the standard tactical paint schemes in Chapter 4 are required.

5-2. AUTHORITY.

a. Major Army field commanders may apply for deviation for the standard tactical paint scheme depicted in Chapter 4 by writing to AVSCOM, ATTN: AMSAV-MEA, who has the authority to grant the deviations. Research and development aircraft which are the responsibility of project or systems managers are exempted from this requirement.

b. Authority to use unique non-tactical paint schemes, markings, insignia, etc. that are different from those described in this chapter, must be approved by the major Army field commander and deviation requests subsequently submitted to AVSCOM, ATTN: AMSAV-MEA, with complete justification (such as safety, mission requirement, cost reduction, etc.), and sketches or photographs describing the unique paint schemes. (See paragraph 1-4.)

5-3. WHEN TO PAINT NON-TACTICAL PAINT SCHEMES.

a. Aircraft in depot overhaul will be painted to a non-tactical paint scheme during overhaul if the major Army field commander, to whom the aircraft will be assigned, requests a specific non-tactical paint scheme, or if it is otherwise known that the aircraft will be definitely assigned to a mission or geographic location that requires a specific non-tactical paint scheme.

b. Newly-assigned aircraft that are known to have a limited length of assignment for a special non-tactical mission or location should not be repainted to a non-tactical paint scheme.

c. Assigned aircraft having the standard tactical paint scheme of Chapter 4 may be repainted to a non-tactical scheme when the long-range mission or location of the aircraft is such as to require a non-tactical scheme.

5-4. PAINT IDENTIFICATION. Where non-tactical paint schemes are authorized, the finish coat specified in the non-tactical paint schemes may be obtained by use of the polyurethane MIL-DTL-64159 or MIL-DTL-53039 or MIL-C-83286MIL-C-83286. See Chapter 3 for appropriate primers.

5-5. SHADE NUMBERS. The shade numbers of some colors of non-tactical finish coats are as follows:

Gloss olive drab	14084
Gloss white	17875
Gloss black	17038
Gloss red	11136
Gloss international orange	12197
Fluorescent red-orange	MIL-P-21600

5-6. FINISHING SYSTEM. The finishing or coating systems (sequence of paint starting from bare metal) for non-tactical paint systems are shown in Chapter 3.

SECTION II SPECIFIC

5-7. ROTOR BLADES AND PROPELLER ASSEMBLIES. Paint schemes for rotor blades and propeller assemblies are covered in Chapter 6.

5-8. MARKINGS. Lettering, wording, insignia, etc. for non-tactical paint schemes shall be the same as for standard tactical aircraft unless specifically stated otherwise in this technical manual.

NOTE

Do not paint items currently unpainted, e.g., antenna masts, loops, antenna housing, radomes, exposed portions of operating mechanisms, transparent panels and anti-glare areas.

5-9. TRAINING AIRCRAFT.

a. TDA helicopters and fixed wing aircraft for training purposes may require additional vivid color schemes and markings to provide high conspicuity due to inexperienced student pilots flying in congested training areas.

b. The fuselage of the training aircraft will be the standard tactical paint schemes of Chapter 4. In addition, areas of fluorescent red-orange paint (MIL-P-21600), or tape may be used when required and authorized. See Chapters 9 and 10 for figures showing details of high conspicuity markings for aircraft used for training.

c. The use of high conspicuity tape in place of fluorescent paint on flat or slightly curved aircraft surfaces offers a better marking for a longer period of time due to its durability, resistance to fading and quick turn around to the tactical configuration when necessary. Tests indicate that the tape does not fade in one year of use, whereas fluorescent paint tends to fade in about four months. Tape has limited application because it hides cracks and corrosion. Tape is to be applied only as shown in illustrations. To eliminate hidden corrosion, the tape shall not be applied over seams. Nonperforated tape shall not be applied over rivet heads, but perforated tape may be applied over rivet heads. Where necessary, the tape may be removed by the application of paint remover, MIL-R-81294.

d. TDA helicopters and fixed wing aircraft, used for training purposes, that are presently painted with international orange, in good condition, will not be refinished with fluorescent paint or tape. They will be maintained with international orange until complete repainting is required.

5-10. AIRCRAFT IN CONGESTED AREAS. TDA helicopters and fixed wing aircraft assigned to CONUS areas with high aircraft density may have the same high conspicuity paint schemes used for training aircraft, when approved as specified in paragraph 1-4.

5-11. AIRCRAFT FOR ARCTIC AND DESERT.

a. The paint scheme for tactical aircraft in arctic regions will be aircraft green unless otherwise designated by the major Army field commander.

b. If directed by the major Army field commander, TDA helicopters and fixed wing aircraft destined for arctic, or desert regions which have not been designated combat areas, may be painted all white, desert sand or with high conspicuity paint schemes as described in Chapters 9 and 10.

c. In general, there will be a highly conspicuous band around the front and the rear of the fuselage. Vertical fins, horizontal stabilizers, and tips of wings on fixed wing aircraft will also have highly conspicuous areas or bands. Details for specific aircraft are shown in Chapters 9 and 10.

d. Highly conspicuous schemes will facilitate locating downed aircraft in the event of a forced or crash landing on ice, snow, or in desert areas. Highly conspicuous color schemes favor visibility in the arctic and desert.

e. To reduce peeling of paint in extremely cold locations (arctic, Alaska, etc.), the paint system should consist of alodine treatment, MIL-PRF-23377 epoxy primer, and appropriate urethane paints.

5-12. TEST SUPPORT AIRCRAFT. Aircraft utilized by White Sands Missile Range and other desert test or development activities. Test Support Aircraft category, may be painted in the high conspicuity arctic or desert paint scheme as described in Chapters 9 and 10.

5-13. MEDICAL RESEARCH AND GEODETIC AIRCRAFT. During peacetime, aircraft for these services may be painted with the high conspicuity arctic or desert paint scheme as described in Chapters 9 and 10.

5-14. GREENLAND ICECAP AIRCRAFT. Aircraft operating in the area of the Greenland ice cap may be painted entirely with international orange to ensure better inflight conspicuity and post-crash survivability.

5-15. MEDICAL SERVICE AIRCRAFT.

a. Army aircraft used as ambulance aircraft will be painted with the tactical paint scheme of Chapter 4, and will bear red cross insignia on a white field positioned on the most suitable surface to be visible from either side, from the ground and from the air. (See Chapter 9).

b. The crosses will be in aircraft Red, No. 31336, MIL-DTL-64159 or MIL-DTL-53039 and the field in aircraft White, No. 37875, MIL-DTL-64159 or MIL-DTL-53039. The overall dimension of the cross depends on available space. The width and length of each protrusion of the cross is one-third of the overall dimension, the white field will be square.

5-16. MILITARY ASSISTANCE PROGRAM AIRCRAFT. All aircraft as signed to the Military Assistance Program (MAP) will conform to the tactical paint scheme of Chapter 4 except that they will possess no insignia, US Army markings, or aircraft serial numbers. MAP aircraft will be identified by three metal tags, citing serial number, affixed in three conspicuous within the aircraft.

5-17. STAFF TRANSPORT (VIP) AIRCRAFT.

a. Fixed wing aircraft, which have been designated as staff transport aircraft are to be painted in accordance with the paint schemes shown in Chapter 10.

b. Staff transport aircraft being prepared for a combat area may be converted to the tactical paint scheme of Chapter 4, at the request of the major Army field commander.

5-18. RESEARCH AND DEVELOPMENT AIRCRAFT. The provisions of this manual will be used as required in determining the painting and markings to be applied to research and development air vehicles. The following markings are considered mandatory for all research and development air vehicles: Identification lettering U.S. ARMY or ARMY, the national insignia, and the vehicle serial and model numbers, and conspicuity painting. Additional authorized markings will be applied as required. All research and development air vehicles will be conspicuously marked with the identification lettering U.S. ARMY or ARMY on all sides when exterior views of the item are photographed or when the item is on public display.

CHAPTER 6
FINISHES FOR SPECIFIC APPLICATIONS: GENERAL

SECTION I GENERAL

6-1. AIRCRAFT FINISHES. This chapter shall present requirements for finishes for specific applications and applications not heretofore explicitly included.

a. All areas currently primed but unpainted will remain unpainted. Reprimed areas will use MIL-PRF-23377 or MIL-P-85582, e.g., under floorboards, inside tailbooms, and behind acoustical mats.

b. Acoustical mats, light curtains, cargo covers, troop seats and like materials will not be painted.

6-2. SURFACE PREPARATION. Surfaces will be prepared and primed as specified in Chapter 2, prior to application of any top coat.

6-3. APPLICATION.

a. Gloss finishes will be used as specified herein.

b. Polyurethane finish, MIL-DTL-64159 or MIL-DTL-53039, aircraft green will be used for all Army helicopters, except as excluded per paragraph 1-10.

6-4. COLORS. Colors will conform to Federal Standard 595 or the applicable military specification. Military Standard 795 is a supplementary document to the standard. Colors as Federal Standard 595 or Military Standard 795 are designated by three digit numbers in the ANA bulletins and by five digit numbers in the Federal standard. Colors of paint compounds are identified by numerical coding system.

a. The first digit identifies the gloss of the color.

(1) The numeral one indicates gloss.

(2) The numeral two indicates semigloss.

(3) The numeral three indicates lusterless.

b. The second digit identifies the selected color classification group.

(1) The numeral one indicates red.

(2) The numeral two indicates orange.

(3) The numeral three indicates yellow.

(4) The numeral four indicates green.

(5) The numeral five indicates blue.

(6) The numeral six indicates gray.

(7) The numeral seven indicates white or black.

c. The last three digits identify the approximate order of increasing diffuse reflection.

6-5. DECALS. Stencils will be used in lieu of decals where possible. If it is absolutely necessary to use decals, they will be locally manufactured or obtained by alternative sources. Aircraft decals will not be stocked, stored or issued. Decals conforming to the requirements of Military Specification MIL-P-38477, plastic film for marking aircraft, may be used lieu of paint on gloss painted aircraft for external and internal markings within the size limits specified herein or as otherwise, stated in paragraph 7-2. Large, one piece decals are unsatisfactory because of application difficulties. Decals may be pressure sensitive, adhesive backed, and scored, but otherwise conforming to Military Specification MIL-P-38477. Pressure sensitive decals should be applied in accordance with TM 1-1500-204-23 (Series). Pressure sensitive decals are not recommended for use on MIL-DTL-64159 or MIL-DTL-53039 painted aircraft except where stencil lettering size is impractical.

SECTION II PROPELLER ASSEMBLIES AND ROTOR BLADES

6-6. GENERAL

a. Purpose. The finish used on propellers and rotor blades is applied to prevent corrosion or deterioration of the underlying surfaces, to resist erosion from sand particles, dust, for anti-glare purposes, to decrease visibility of tactical aircraft used in some areas.

b. Paint Schemes and Shades. Paint schemes and shades for propeller assemblies and rotor blades are shown in Chapters 8, 9, and 10.

c. Tactical vs Non-Tactical Optimum High Visibility Schemes. Propeller assemblies and rotor blades of tactical aircraft in tactical areas or in normal CONUS areas shall be painted according to the standard tactical paint schemes. The non-tactical optimum high visibility paint schemes for propeller assemblies and rotor blades are permissible for TDA helicopters and fixed wing aircraft, as cited in paragraph 1-4. These schemes are to provide high visibility of propellers and rotor blades under the following conditions:

(1) High density aircraft on the ground to reduce the risk of personnel walking into propellers or tail rotor blades.

(2) High density aircraft in the air to reduce mid-air collision by making the aircraft below more visible.

(3) Visibility of downed aircraft in arctic, jungle or desert areas.

(4) Visibility of downed VIP aircraft.

(5) Visibility of aircraft in a training environment.

d. Requirement. Before selecting the optimum high visibility paint scheme, commanders should give consideration to the requirements for funds, painting and balancing equipment, and personnel to properly support the high visibility paint scheme.

e. Replacing Previous Schemes. Propellers and blades painted to previous non-tactical paint schemes need not be repainted to the optimum high visiblitiy scheme unless repainting is needed for other reasons, such as excessive retouching or overhaul. TOE/MTOE helicopters which are painted with low reflective tactical paint schemes using MIL-DTL-64159 or MIL-DTL-53039, aircraft green, or aircraft grey, will not have the striped high visibility paint scheme applied to main or tail rotor blades. These aircraft will have blades painted in accordance with MIL-DTL-64159 or MIL-DTL-53039, aircraft black #37038.

f. Precedence. Concerning touchup, over painting, stripping, paint application and balancing; if the contents of this TM disagree with instructions in the aircraft maintenance manual or in overhaul manuals, the latter manuals take precedence over this TM.

g. Touchup. When necessary, propellers and blades may be lightly touched up between overhaul periods while installed on the aircraft. Care will be exercised to apply proportionate amounts of paint to each blade to maintain proper balance. Where touchup paint can be applied to all blades of an assembly in proportionate amounts, balance need not be accomplished. This is not to be interpreted as an authorization for deletion of propeller or blade balance at overhaul, or at any other time, when balancing is normally required.

h. Overpainting for Optimum High Visibility. The optimum high visibility non-tactical stripes in Chapters 8, 9 and 10 will not be added over the existing tactical paint scheme. Similarly, the tactical paint scheme will not be added over the high visibility paint scheme. The blades should be stripped, painted and rebalanced.

i. Stripping. Ensure all blade data and markings are obtained prior to stripping paint from blades so that the same data and markings may be restenciled on applicable blades subsequent to repainting. Propeller blades of fixed wing aircraft will not be stripped during aircraft repainting unless necessary.

WARNING

When rotor blades are bonded construction, the original finish should not be stripped because of possible harmful effects of paint strippers on bonding agents and adhesives. Personnel should consult applicable maintenance manuals for removal of old paint finishes from these blades.

j. Paint Application. When applying primer or finish coats, the blades and propellers must be in a horizontal position, and retained in that position until the paint or primer has set. Primer and finish coats should be sprayed on lightly and uniformly. Surfaces will be prepared and primed as specified in Chapter 2 unless otherwise directed. Topcoat finishing materials should conform to those materials listed herein.

k. Balancing. After complete repainting or extensive touch-up, the propellers and blades must be rebalanced in an intermediate maintenance or overhaul maintenance facility.

CAUTION

Painting of main rotor, tail rotor, and propeller blades may create out-of-balance and unacceptable vibration conditions. Strict adherence to instructions is required to reduce the probability of creating these out-of-balance conditions. Care must be exercised to apply proportionate amounts of paint to each blade to maintain proper balance.

NOTE

CH-54 main and tail rotor blades shall be painted and balanced by the overhaul activity only.

AH-64 main and tail rotor blades complete repainting or extensive touch up should be accomplished at an approved overhaul facility because of balance requirements.

NOTE

Complete repainting of main and tail rotor blades on UH-60 and OH-58 aircraft is normally accomplished during blade overhaul only. Main and tail rotor blades are individually balanced (spanwise and chordwise) to master blades during overhaul after painting to insure interchangeability between blades of the same configuration. Painting of blades in the field may cause subsequent interchangeability problems.

NOTE

Minor touch up is only needed.

l. Paint Procedures for Drive Shaft and Couplings. Polish out all surface defects with Scotch Brite (7447-B TYPE II) (26066). Touch up polished area with paint epoxy primer base 1-1G-69 (06367) and epoxy primer hardener 1-H-75 (06367) or a suitable substitute. First apply a wash primer (MIL-C-8514 TYPE 1) NSN 8030-01-015-6104. Allow to air dry for 1 hour.

6-7. PROPELLERS.

a. For tactical aircraft.

(1) Follow Chapters 9 and 10 on a specific aircraft if it contains details about painting blades, spinner or hubs.

(2) If sufficient data does not exist in Chapters 9 and 10, the standard tactical finish shall be Aircraft Black, MIL-DTL-64159 or MIL-DTL-53039, No. 37038, on both sides.

(3) The exterior surface of unplated hubs, fore and aft, will be painted with Aircraft Black, MIL-DTL-64159 or MIL-DTL-53039, No. 37038.

(4) Deleted

b. For non-tactical aircraft.

(1) The blades may be painted with stripes per Figures 8-8, 8-9 and 8-11.

(2) On all propellers, paint the stripes on the front side, and aircraft black on the back side. Plated hubs remain unpainted. Spinners to be painted as shown on figure 8-8.

6-8. MAIN ROTOR BLADES.

NOTE

Complete repainting of rotor blades should be accomplished at an approved overhaul facility or depot activity. The weight and balance of blades is critical and complete repainting is not allowed by field units. Refer to applicable maintenance manual for extent of painting blades.

a. For tactical aircraft. The upper and lower surface of main rotor blades shall be finished in Aircraft Black, MIL-DTL-64159 or MIL-DTL-53039, No. 37038.

b. For non-tactical aircraft.

(1) The under surface of the blades shall be finished in aircraft black.

(2) The upper surface of the blades will be painted with stripes per figure 8-8 and 8-13. Note that the outer two stripes are the same on all blades.

(3) For additional visibility in arctic areas, the outer 25% of the blades may be painted fluorescent red orange. The remaining portion of blades will be divided into 15% black and white segments as shown in the figures.

(4) Deleted

(5) The rotor and hubs and control mechanisms shall be painted aircraft black, except for mating, load bearing or dynamic surfaces.

c. Identifying dots of various colors will be installed by the contractor on mounted blades for the purpose of matching blade with identifying color on the hub. Blades ordered individually will not have identifying dots installed by the contractor, but will be added by field personnel as required.

6-9. TAIL ROTOR BLADES.

NOTE

Complete repainting of rotor blades should be accomplished at an approved overhaul facility or depot activity. The weight and balance of blades is critical and complete repainting is not allowed by field units. Refer to applicable maintenance manual for extent of painting blades.

a. For tactical aircraft.

(1) Prime blade surfaces with epoxy type MIL-PRF-23377 or MIL-P-85582. Apply primer in accordance with Chapter 3.

(2) Both sides of the blades will be painted Aircraft Black, MIL-DTL-64159 or MIL-DTL-53039, No. 37038.

(3) The rotor hubs and control mechanism shall be painted aircraft black, except for mating, load bearing or dynamic surfaces.

b. For non-tactical aircraft.

(1) Prime blade surfaces with primer MIL-PRF-23377 or MIL-P-85582. Apply primer in accordance with Chapter 3.

(2) Both sides of the blades may be painted with stripes per figure 8-8 and 8-13. Note that the outer two stripes are the same on all blades in figure 8-13.

(3) Application of stripes to tail rotor blades involves a 20% offset of non-concentric sections so as to provide concentric rings during rotation. Careful attention should be given to figures 8-8 and 8-13 when applying this paint scheme.

(4) Deleted

(5) The rotor hubs and control mechanism shall be painted aircraft black, except for mating, load bearing or dynamic surface.

(6) Deleted

SECTION III AIRCRAFT EXTERIOR LANDING GEAR AND WHEELS

6-10. LANDING GEAR.

a. Helicopters. Helicopters skids and skid structures will be painted in the same manner as the fuselage, with aircraft green, MIL-DTL-64159 or MIL-DTL-53039. When repainting helicopters, the skids will be removed from the aircraft, the skid wells and enclosures will be inspected, cleaned and repainted. The removed skids will be inspected, cleaned or stripped, as appropriate, repainted and reinstalled on the aircraft.

b. Fixed Wing Aircraft. Landing gear of fixed wing aircraft will be processed in same paint as the fuselage. Mating, dynamic or load bearing surfaces, e.g., oleo pistons will not be painted. Landing gear of non-tactical aircraft will be painted color 17925, MIL-C-83286.

6-11. WHEELS.

a. Wheel wells of tactical aircraft will be painted Aircraft White, No. 37875, per MIL-DTL-64159 or MIL-DTL-53039.

b. During repainting, wheel wells will be thoroughly cleaned but not stripped.

SECTION IV WALKWAY COATINGS

6-12. WALKWAYS. Walkway coatings conforming to Military Specification MIL-W-5044 will be applied on wing roots and heavy duty exterior traffic areas of all aircraft and overcoated with MIL-DTL-64159 or MIL-DTL-53039, aircraft green or aircraft black. Walkway coating conforming to Military Specification MIL-W-5044, Type II may be applied directly over any primed, enamelled or acrylic nitro-cellulose lacquer surfaces of the aircraft exterior. These areas must be overcoated with MIL-DTL-64159 or MIL-DTL-53039 aircraft green or aircraft black. The wing root walkways will be applied on both wing roots to a width of 18 inches measured from the fuselage and will extend from just aft of the leading edge to just forward of the trailing edge. The exact width may vary from the 18-inch requirement for specific aircraft. Safety walk, pressure sensitive material conforming to Military Specification MIL-D-17951, Type III, may be used as an option, but is not recommended. When such materials are used, they must be overcoated with MIL-DTL-64159 or MIL-DTL-53039 paints. Particular attention must be given the edges to assure good adhesion and sealing with MIL-DTL-64159 or MIL-DTL-53039 paint.

NOTE

DELETED

a. Application Procedures for Walkway Coating, Military Speci.cation MIL-W-5044.

(1) Apply walkway coating in accordance with application instructions in Military Specification MIL-W-5050.

(2) After each coat, allow a minimum drying time of 1/2 hour.

(3) After final coat, allow walkway coating to air-dry until set to touch before handling.

Table 6-1. Typical Aircraft Interior Areas To Be Painted

ITEM					
	AH-64	**CH-47**	**OH-58**	**UH-60**	*
Metal framework, doors and windows	X	X	X	X	
Windshield frames	X	X	X	X	
Metal structure, walls and ceilings	X	X	X	X	
Glare shields, top and bottom and exposed operating accessories	X	X	X	X	
Instrument panels (metal structures)	X	X	X	X	
Frame of pedestals or consoles	X	X	X	X	
Seat frames, crewstations and cargo compartment	X	X	X	X	
Armor panels (omit rubber edging)	X			X	
Metal portions of control systems	X	X	X	X	
Crewstation handles, exit emergency	X	X	X	X	
Foot control arms, rudder pedals and support brackets	X	X	X	X	
Exposed metal parts of air vents (except swivel joints)	X			X	
Exposed metal parts of logbook holder	X	X	X	X	
Crewstation deck (including areas visible from chin bubble, where applicable)	X	X	X	X	
Cyclic control sticks and adjustment mechanisms	X	X	X	X	
[1] Other fixed wing aircraft currently have commercial interior paint schemes not applicable to this table.					

Table 6-1. Typical Aircraft Interior Areas To Be Painted — Continued

ITEM	AH-64	CH-47	OH-58	UH-60	*
Collective control system, except lock	X	X	X		
Ash trays	X	X	X	X	
Pedestal or console panel (sides)	X	X	X	X	
Spare bulb holder (mask spare bulbs)	X	X	X	X	
Overhead consoles (sides and edges)		X	X	X	
Radio transmit foot switches (some masking required)	X	X	X	X	
Blanking plates on consoles or pedestals	X	X	X	X	
Crew and passenger stations	X	X	X	X	
Canopy egress system and explosive charge covering (exposed Teflon cord must be masked with Scotch Cal tape prior to painting)	X				
Restraining bands and brackets for fire extinguishers	X	X	X	X	
Framework supporting transilluminated panels (lift panels to paint frame)	X	X	X	X	
Hand holds	X			X	
Seats (adjusted to the most forward, aft and vertical positions to assure full paint coverage)	X	X	X	X	
Seat tracks, except sliding surfaces	X	X		X	
Collective pitch down lock (markings in Orange-Yellow No. 33538, after painting)		X			
Overhead console and switches (transilluminated). Touch-up, i.e., light scratches and crazing	X	X	X	X	X

Table 6-1. Typical Aircraft Interior Areas To Be Painted — Continued

ITEM					
	AH-64	**CH-47**	**OH-58**	**UH-60**	*
Directional control pedal adjuster (all adjust knobs/levers, except plastic)	X	X	X	X	
External cargo mechanical release systems		X		X	
Fuel shut-off valve handle and guard			X		
Pilot's and copilot's directional and wheel brake pedals		X		X	
Inertial reels	X	X	X	X	
Hydraulic lines in chin bubble (mask identification tapes or replace)					
Avionics brackets in chin bubble				X	
Shoulder harness lock/unlock controls	X	X		X	
All accessory compartments accessible from outside	X	X	X	X	

Table 6-2. Typical Aircraft Interior Areas Not To Be Painted

ITEM	AH-64	CH-47	OH-58	OV-1	UH-60	*
NOTE **In general, the goal is not to paint those items that .ex, issue instructions, or are transparent.**						
Windows and windshields (mask inside and out to avoid overpaint/overspray and premature replacement)	X	X	X	X	X	
Fire extinguishers	X	X	X	X		
Oxygen cylinders				X		
First aid kits	X	X	X	X	X	
Restraint systems, including buckles (seat belts and shoulder harnesses should be removed to avoid overspray and premature replacement)	X	X	X	X	X	
Seat cushions	X	X	X	X	X	
Plastic material in seats	X	X	X	X	X	
Instrument cases and glass (including magnetic compass and outside air temperature gage)	X	X	X	X	X	
Rod end bearings		X	X		X	
Electrical outlets		X	X		X	
Emergency handles	X	X	X		X	
All placards, markings, and data plates (yellow-orange stencils must be restenciled)	X	X	X	X	X	
[1]Other fixed wing aircraft currently have commercial interior paint schemes not applicable to this table.						

Table 6-2. Typical Aircraft Interior Areas Not To Be Painted — Continued

ITEM						
	AH-64	**CH-47**	**OH-58**	**OV-1**	**UH-60**	*
Flexible ducts made of fabric or rubber	X	X	X	X	X	
Soundproofing blankets, fabric covered panels	X	X	X	X	X	
Key lock ignition switch (requires masking)	X	X	X	X	X	
Pedestal panel (top)				X		
Deleted						
Padded windshield wipers and/or rubber components						
Governor control switch on copilot's collective stick head	X	X	X		X	
Face of pilot's collective stick head	X	X	X		X	
Terminal boards	X	X	X	X	X	
Microphone control cords	X	X	X	X	X	
Cockpit utility lights	X	X	X	X	X	
External stores panel and jettison handle	X		X	X	X	
Compass switch	X	X	X	X	X	
Turret control panel	X					

Table 6-2. Typical Aircraft Interior Areas Not To Be Painted — Continued

ITEM						
	AH-64	**CH-47**	**OH-58**	**OV-1**	**UH-60**	*****
Calibrated ADF loop antenna control	X	X	X	X	X	
Armament system sighting units	X					
Caution panels	X	X	X	X	X	
All information and radio panels	X	X	X	X	X	
Static pressure lines	X	X	X	X		
Pilot's and copilot's control stick handles				X		
Pilot's and copilot's thrust control rod end bearings			X			
Boots around control rods	X	X	X	X	X	
Hydraulic lines and fittings	X	X	X	X		
Station 95 bulkhead		X				
Collective pitch down locks (where painted yellow)	X	X	X			
Console panel (top)	X	X	X	X	X	
Pilot's and copilot's cyclic control handles	X	X	X		X	
Pilot's and copilot's collective control rod end bearings	X	X	X		X	
[1] Other fixed wing aircraft currently have commercial interior paint schemes not applicable to this table.						

NOTE

Full hardness is attained within maximum drying time of 24 hours.

(4) After walkway coating is completely dry, sand all edges to fair in with adjacent finished area. Walkways will not be polished or waxed.

(5) Apply MIL-DTL-64159 or MIL-DTL-53039 paint over entire compound and over edges.

6-13. ANTIGLARE COATINGS. Helicopters painted with tactical paint schemes do not require antiglare paint forward of windshield.

6-14. BATTERY COMPARTMENTS.

a. Neutralization.

(1) Acid Electrolyte. Exercise care to prevent acid from spreading to adjacent areas. Wash areas affected by battery acid with 20 percent solution of sodium bicarbonate, Federal Specification 0-S-576, in water. Neutralization is completed when bubbling ceases. After neutralization, remove all traces of sodium bicarbonate solution with generous quantities of water to prevent corrosion.

(2) Alkaline Electrolyte. Exercise caution to prevent acid from spreading to adjacent areas. Wash areas affected by electrolyte with 3 percent solution of boric acid in water. Neutralization is completed when bubbling ceases. After neutralization, remove all traces of boric acid solution with generous quantities of water.

b. Treatment After Neutralization. Treat affected area by swabbing with 5 percent solution of chromic acid, Federal Specification 0-C-303, or 5 percent of potassium bichromate, Federal Specification 0-P-559, followed by flushing with water and thorough drying.

c. Painting. After the above neutralization and treatment, apply the following paint system:

(1) Apply two (2) coats of epoxy polyamide primer, MIL-PRF-23377, Type I or Primer, MIL-P-85582.

(2) Apply (over these coats) one (1) coat of primer coating epoxy, MIL-P-52192.

NOTE

Coating (1), MIL-PRF-23377, is yellow. When wear, scratching, or other topcoat damage occurs, the yellow or gray primer undercoats will be exposed indicating that repainting is necessary. This is essential to protect aluminum or magnesium composite structures.

d. Touchup. Using organizations may touch up the battery areas after proper neutralization.

(1) Acid Battery. One coat acid-proof varnish TT-V-51.

(2) Alkaline Battery. One coat MIL-C-83231, Type II coating.

6-15. HIGH TEMPERATURE AREAS.

a. Below 400° F (204° C).

(1) Surfaces exposed to exhaust gases, corrosive fluids, environmental elements, and areas known to be subject to corrosive attacks for which ambient temperatures do not exceed 350 °F (177 °C), finish in accordance with (2) through (3) below.

(2) Apply two coats of MIL-DTL-64159 or MIL-DTL-53039 paint, in appropriate color, over one coat of epoxy primer, MIL-PRF-23377 or primer MIL-P-85582.

(3) Areas and components fabricated of magnesium or steel, other than corrosion resistant steel, that are exposed to temperatures exceeding 300°F (149°C), but not above 400°F (204°C), either on the ground or in flight (other than momentarily), finish with MIL-DTL-64159 or MIL-DTL-53039 in appropriate color. Use primer, MIL-P-52192, where ferrous metals are involved.

b. Above 400° F (204° C).

(1) Coat aluminum alloy surfaces with heat resistant paint, military specification MIL-P-14105 Color Shade No. 34087 for Olive Drab and TT-P-28, Color Shade No. 17178, for aluminum.

NOTE

These are modified silicone paints which require heating to 450° F (232° C) for an hour after application. However, when applied to turbine engine surfaces, the heat generated in normal operation is considered adequate for curing. Cured silicone paints will resist the attack of diester oils.

(2) On areas and components fabricated of magnesium or steel, other than corrosion resistant steel, that are exposed to temperatures, from 400° F to 500° F (204° C to 260° C), use silicone finish systems applied directly on the chemical surface-treated metal, omitting the wash prime and primer. Unless authorized by the government procuring activity, the color will conform to the color scheme for the aircraft. Above 500° F (260° C) use heat-resistant finishes as approved in each instance by the government procuring activity.

(3) Deleted.

c. Deleted.

6-16. RUBBER. Do not paint rubber components, either natural or synthetic.

6-17. ANTENNAS AND RADOMES.

a. If aircraft are painted without removing antennas and radomes, thoroughly mask the antennas and radomes.

b. Use the applicable TM 11 series manual for guidance on painting antennas.

c. On fixed wing aircraft, finish leading edges of antennas and radomes exposed to the airstream with rain-erosion-resistant system conforming to Military Specification MIL-C-83231 or MIL-C-83445 (See 6–33).

d. Radomes are not to be stripped or painted.

SECTION V INTERIOR PAINTING

6-18. GENERAL.

a. General Information for Painting Crewstations.

(1) All tactical rotary wing aircraft crewstations shall be painted Aircraft Black, No. 37038, per MIL-DTL-64159 or MIL-DTL-53039. Tactical fixed wing aircraft shall be painted lusterless gray, per MIL-C-8779. Interior marking stencils shall be Aircraft White, No. 37875, MIL-DTL-64159 or MIL-DTL-53039. When decals are used, they shall be white vinyl ink letters on a lusterless black background.

WARNING

Paint residue can retard free movement of flight and power controls causing unsafe conditions leading to a crash. Therefore, check all flight and power controls before flights following painting of aircraft interiors. Emergency handles should also be checked for freedom of action.

(2) See Table 6-1 for items to be painted. See Table 6-2 for items not to be painted.

(3) See Chapter 7 for general interior lettering and marking instructions.

(4) Uninhabited enclosures in the crewstation area will also be painted Aircraft Black No. 37038 (e.g., map holders, under console and circuit breaker panels and equipment storage areas).

(5) Crewstations and passenger stations of OH-58 aircraft will be painted Aircraft Black, No. 37038, per MIL-DTL-64159 or MIL-DTL-53039. Passenger compartments of fixed wing aircraft will be painted lusterless gray or green per MIL-C-8779. Markings and stenciling applied in passenger stations of these aircraft will be in Aircraft White, No. 37875, MIL-DTL-64159 or MIL-DTL-53039. Decals shall be white vinyl ink letters on a lusterless black background.

NOTE

Do not spray paint transilluminated console panels.

(6) Transilluminated console panels with crazing, scratches and gouges may be touched-up with lusterless black lacquer. Touch-up may be accomplished by using a small bristled brush, wetted with MIL-L-19538 or MIL-DTL-64159 or MIL-DTL-53039, black #37038, lacquer.

b. Cargo/Troop Compartments.

(1) The aircraft cargo/troop compartments will be painted either in polyurethane, MIL-DTL-64159 or MIL-DTL-53039, or epoxy paint, MIL-C-22750. Epoxy paint has characteristics equal to those of polyurethane in applications not continuously exposed to sunlight.

(2) Aircraft cargo/troop compartments will be painted in Interior Aircraft Gray No. 36231, MIL-DTL-64159 or MIL-DTL-53039.

(3) Deleted

(4) Markings and stencils applied on the gray of cargo/troop compartments will be in aircraft black, No. 37038, per MIL-DTL-64159 or MIL-DTL-53039. Markings applied on aircraft black will be in aircraft white, No. 37875, MIL-DTL-64159 or MIL-DTL-53039.

(5) Uninhabited enclosures and/or bays of cargo/troop compartments will be painted in the same manner as the compartment, e.g., avionics compartments, hydraulic components, areas under acoustical mats.

c. External access and equipment bays and enclosures will be painted in aircraft black with markings and stencils in Orange-Yellow, No. 33538, MIL-DTL-64159 or MIL-DTL-53039.

6-19. MIL-DTL-64159 OR MIL-DTL-53039, AIRCRAFT BLACK, NO. 37038, POLYURETHANE PAINT, CREWSTATION SURFACES.

a. The MIL-DTL-64159 or MIL-DTL-53039 topcoat is a plural component low reflective polyurethane paint system, intended for use over epoxy polyamide primer, MIL-PRF-23377 or MIL-P-85582.

b. This coating system and paint scheme constitute the Army standard interior crewstation paint system for tactical aircraft. The system provides a non-specular chemical resistant surface for aircraft crewstations. This paint system also enhances crewstation compatibility with electro-optical assisting devices and reduces the exterior electro-optical signature.

c. Field crewstation touch-up procedures will include brush and roller processes only.

CAUTION

Spray equipment for touching up interior crewstation surfaces is not to be used, except by overhaul, manufacturer or other facilities qualified to appropriate safety procedures.

d. Maximum effectiveness of lighting and chemical/biological resistance is achieved when as much of the aircraft crewstation is coated as possible. It is particularly important that surfaces which are touched or handled be properly maintained in this paint system.

6-20. EPOXY PAINT, MIL-C-22750, FOR INTERIOR SURFACES OTHER THAN CREWSTATIONS.

a. This is a plural component paint which has chemical agent resistance equal to MIL-DTL-64159 or MIL-DTL-53039 paints. It is formulated for interior surfaces which are not continuously exposed to sunlight.

b. MIL-C-22750 paint is applied in two coats. Apply a mist coat and air dry for 15 minutes. The second coat should be applied until the total dry film thickness is 1.7 to 2.3 mils. The total thickness of the topcoat should not exceed 2.3 roils.

c. MIL-C-22750 may be used to refinish internally installed components, see paragraph 5-1.

d. This paint may be used in cargo/troop compartments or uninhabited areas in lieu of MIL-DTL-64159 or MIL-DTL-53039. It should be painted in either gray or black.

6-21. MIL-DTL-64159 OR MIL-DTL-53039, POLYURETHANE, INTERIOR AIRCRAFT GRAY, NO. 36231. This is a plural component polyurethane coating paint, intended for use over epoxy polyamide primer, MIL-PRF-23377, or MIL-P-85582.

6-22. PROCEDURES.

a. These procedures will be implemented by maintenance personnel who have the proper training and equipment to apply epoxy primers and plural component polyurethane paints.

(1) It is essential that all painting and cleaning be performed according to safety procedures described in this TM. Occupational Safety and Health Administration (OSHA) and National Institute of Safety and Health (NIOSH) requirements. Prior to operations, the painting facility and processes must be approved by the local safety office.

(2) It is imperative that crewstations be well ventilated during all painting operations, and proper respiratory equipment be used.

(3) Extreme care must be exercised to prevent any paint or solvents from coming in contact with restraint belts or the belts may be damaged and require replacement due to loss of tensile strength.

(4) There are four possible methods of applying MIL-DTL-64159 or MIL-DTL-53039 paint to crewstation areas.

(a) Apply paint with spray equipment, after appropriate masking, during manufacturing and production or aircraft overhaul only.

(b) Use of paint brushes or rollers at field level applications and maintenance.

(c) Dismantle assemblies, spray the parts in an appropriate facility and reassemble, as required.

(d) Combinations of the above.

(5) The choice of the proper method depends on the model of aircraft, the facilities and trained manpower available at the location to do the painting, the quantity of aircraft to be painted, condition of the existing coatings, and the specific areas to be painted. Any method or combination of methods may be used with adherence to proper safety procedures.

b. Evaluate the existing coating to determine if the aircraft crewstation is in a condition to receive the MIL-DTL-64159 or MIL-DTL-53039 coating, or if the existing coating must be stripped. If existing coatings are not acceptable, process in accordance with Chapter 2, Surface Preparation.

c. Aircraft crewstations painted with MIL-DTL-64159 or MIL-DTL-53039 interior aircraft black are rough textured and are not acceptable surfaces. These surfaces must be stripped to the primer surface and reprocessed when a complete repainting is performed. (For touch up of areas previously painted with MIL-DTL-64159 or MIL-DTL-53039, see 4-13.) Where primer is worn through to the metal substrate, such areas must be treated as metal substrate areas and processed in accordance with provisions herein for such areas.

d. Cabin areas of some UH-60A aircraft have a topcoat of TT-L-20, Gray No. 36231, that should be maintained and touched up as required with the TT-L-20 (camouflage lacquer) until these aircraft are converted to an interior topcoat of MIL-DTL-64159 or MIL-DTL-53039.

e. Mask all cabin areas that may be damaged by paint, paint vapors and cleaning solvents. See paragraph 6-26 for areas and items to be painted. This is particularly important for acrylic surfaces such as canopies and panels.

f. Primers required. Acceptable surfaces require only a flash coat of epoxy primer to insure maximum adhesion of MIL-DTL-64159 or MIL-DTL-53039 paint. The flash primer coat may be eliminated if the area to be painted is extremely small and the surfaces are acceptable according to paragraph 4-12 and are appropriately cleaned prior to topcoating. Primers may be applied with brushes or rollers.

(1) Apply a full primer coat on all areas where there is expected heavy abrasion wear (cabin decks, pedals, foot rests, etc.)

(2) It is necessary to reprocess all bare metal areas.

(3) Using the basic application procedure described in Chapter 3, apply MIL-PRF-23377 or MIL-P-85582 Primers. Apply 0.6 to 0.9 mil to surfaces to be overcoated.

Allow the primer to dry one to two hours. Under some environmental conditions, shorter drying times may be allowable and preferred.

NOTE

As the drying time of epoxy primer increases beyond two hours, the adhesion of the top coat may decrease considerably. Care must be exercised to observe the maximum primer drying time. When the time limit is exceeded, a mist coat of primer must be applied to the surface prior to topcoating.

6-23. APPLICATION.

a. The amount of MIL-DTL-64159 or MIL-DTL-53039, Aircraft Black, No. 37038 paint will be mixed which will be used during the subsequent 6-8 hours. The thoroughly mixed components A and B will be allowed to set for a period of 30 minutes for aeration. This aeration period is not necessary if spray equipment is to be used.

CAUTION

Spray equipment will be used only in crewstations and similar confined areas when proper ventilation and protective equipment is used.

b. Subsequent to the aeration period the paint will be stirred frequently to assure suspension of solid particles and uniform surface application.

c. The mixture will be thinned in accordance with Chapter 4. The exact thinning ratio and viscosity will be determined by the user and the application method.

6-24. APPLICATION WITH SPRAY EQUIPMENT.

a. Assure facility and equipment adequacy.

b. Apply paint, after application of primer, where required. Allowing the appropriate drying period, apply first coat in continuous overlapping strokes. See Chapter 4 for additional instructions.

c. Allow first coat to set at least ten minutes before application of second coat in continuous overlapping strokes to achieve the required dry film thickness of 1.8 - 3 mils

NOTE

Continuous or frequent agitation of the mixture must be maintained to assure suspension of solid matter and uniformity of topcoating.

d. The cured topcoating shall show no running, sagging, streaking or other surface inconsistencies.

e. Interior stencils and markings may be applied any time subsequent to ten minutes after application of final topcoat.

f. No heating or drying apparatus is required since this paint is catalytic and will cure under most ambient conditions. Full use cure will occur in 18-24 hours.

6-25. APPLICATION WITH BRUSH OR ROLLERS. See Chapter 4.

6-26. TYPICAL AIRCRAFT INTERIOR AREAS TO BE PAINTED. Refer to Table 6-1.

6-27. TYPICAL AIRCRAFT INTERIOR AREAS NOT TO BE PAINTED. Refer to Table 6-2.

6-28. DECALS, PLACARDS, MARKINGS, LABELING IN COCKPIT AREA (WHEN USED).

a. General. Present decals, placards, markings and labeling in the cockpit area of some helicopters may cause reflections which interfere with night flight. The following actions are necessary to subdue the markings and take full advantage of the low reflective black paint in the cockpit area.

b. Type Size. It is preferable to use a lettering font in accordance with MIL-HDBK-759 and a width to height ratio of 1 to 8 to optimize readability under very low illumination levels.

c. Wire Bundles. For tactical aircraft, cover all exposed electric wire bundles with MIL-I-15126, black tape to reduce reflections from light colored wires.

d. Remove the following from helicopter cockpit areas:

(1) Radio Magnetic Indicator Placard on CH-47.

(2) DC Electric Instrument Placard Label on Turn and Slip Indicators.

(3) Instrument Panel Checklist.

(4) Radio Call Designator/Aircraft Identification Placard. Replace with new placard containing the words RADIO CALL in letters 3/16 inch high, and aircraft identification numerals 5/16 inch high. Use lusterless Aircraft White #37875 letters and numbers on an aircraft black placard.

(5) Deleted

(6) Compass Correction Card, RMI and Magnetic. Place information in the front of the aircraft log book where it can be referred to easily.

NOTE

It is permissible to locally manufacture a metal insert painted lusterless black for installation in the front of the compass card holder during night flight.

(7) Communication/Navigation Control Box Identification Labels on OH-58. These labels identify the location of the control boxes in the console. Remove these labels from the side of the center console.

(8) Deleted

(9) Airframe Overhaul Facility or Quality Control Identification Decals. Remove these decals from the crewstation area and reposition them to another location inside of the aircraft. The decals should be located so that they will not be easily rubbed or subjected to unnecessary weathering. They should be readable during daylight conditions.

(10) Deleted

(11) Deleted

(12) Crashworthy Fuel System Installed Decal.

(13) Operating Limits Decal on OH-58.

(14) Deleted

(15) GO-NO-GO Take-off Data Placard. Place TEAC maximum N1, RPM% and data entries in the front of the aircraft log book where it can be referred to easily.

(16) Deleted

(17) Deleted

(18) Deleted

(19) Warning Decal for use of Engine Condition levers Below 17 °C on CH-47C.

(20) Radio Transmitter Select Identification Placard.

e. Redundant labels of Instrument on UH-1, and OH-58. Several instruments on the OH-58 have their function displayed on the instrument and also on a placard or label on the panel adjacent to the particular instrument. Remove all duplicate labeling from the instrument panel. Judgement must be exercised before removing these labels. For example, there are two temperature displays having the same dial face, but one is used for the engine and the other is used for the transmission; both panel labels for these two instruments shall remain. The gas producer display, on the other hand, has duplicate labeling on the instrument and on the instrument panel; the panel label should be removed.

f. VNE Computer on CH-47. Do not make any change to this computer.

g. Marking General. Any placards, decals, markings, or labeling not discussed above shall be retained but modified if necessary to have lusterless Aircraft White #37875 lettering/marking on a low reflective black background.

h. Placard Material. Placards may be made of L-P-387A plastic sheet, laminated, type NDP, 1/6 inch thick, opaque, dull black face with white core; or equivalent.

i. Adhesives. Before applying decals, placards, tape or labels, lightly sand the paint in the area of application. Adhesive EC847 may be used for placards.

j. Touch-up. If the instrument panel was already painted with black before receipt of this TM, remove and/or replace markings, placards, labels, etc., according to the instructions in para 4-5. Touch up the panel.

k. Removal of Decals, Labels, etc. To remove decals, labels, etc. follow TM 1-1500-204-23 (Series), or use a razor blade.

6-29. EMERGENCY EXIT MARKINGS.

a. General.

(1) All lettering and markings shall be in Orange-Yellow, No. 33538, MIL-DTL-64159 or MIL-DTL-53039.

(2) Doors and door frames shall be painted Aircraft Black, No. 37038, MIL-DTL-64159 or MIL-DTL-53039, in accordance with para 6-22a.

(3) The information in the following paragraphs supplements information in Chapter 7, Section X and in Chapter 8 concerning interior markings for the cockpit area.

(4) Striping on the door shall consist of Orange-Yellow, No. 33538, MIL-DTL-64159 or MIL-DTL-53039, markings 1/2 inch by 1 inch (positioned lengthwise) spaced one foot apart around the door.

b. Deleted

c. Deleted

d. Emergency Exit Markings on OH-58.

(1) Apply the words EMERGENCY RELEASE on the diagonal forward portion of the door frames as close to the door jettison handles as possible.

(2) Apply the word PULL, with an arrow to indicate the hand motion required, adjacent and just below the door jettison handles.

(3) The door jettison handles shall be painted orange-yellow and black 1/8 inch wide alternate stripes.

(4) Place the words EMERGENCY EXIT on the center of the side panel of the door.

(5) Apply the words OPEN-CLOSED.

e. Emergency Exit Markings on CH-47. Apply the words EMERGENCY EXIT/TURN HANDLE marking adjacent to the door jettison handle.

SECTION VI PROTECTIVE COATINGS

6-30. COATINGS FOR FIBER LAMINATE MATERIALS.

a. Sandwich-type laminate parts in aircraft are coated for several reasons with the type of coating being chosen for the specific application of the part. Plastic parts such as radomes are normally coated primarily for rain erosion resistance. Paints shall not be applied to radomes or antennas unless specifically directed in 6-17.

b. In repairing sandwich-type laminate parts, the final step is to refinish the part with a finish identical to the original finish. (Refer to drawings and applicable specifications of the parts).

NOTE

There will be no protective coating sprayed upon radomes for prevention of scratching or marring during transport" tion. As previously emphasized, items constructed of fiberglass material require special handling at all times to prevent damage. Addition of protective coatings for prevention of such damage would not prevent major damage and would tend to reemphasize special handling precautions. Surface will be protected by covering with paper or similar material.

6-31. PROTECTIVE COATINGS FOR RAIN EROSION. Fiberglass laminated surface located on the frontal areas of aircraft are subjected to considerable erosive action when flying through rain. These areas must be protected to prevent severe damage to the fiberglass surface. Rain erosion coating systems conforming to Military Specification MIL-C-83231 and MIL-C-83445 applied to affected surfaces will provide protection from the effects of rain erosion. These materials will protect the fiberglass surface indefinitely, providing the coating is replaced or repaired when inspection indicates such work is necessary. Thermally reflective elastomeric coating system, Military Specification MIL-C-83445 is a dual purpose coating to be used as a thermally reflective coating on exterior laminated plastic parts where protection from rain erosion is required. For economic reasons, the thermally reflective coating will be used only where both thermal and erosion protection is an established requirement.

a. Rain erosion resistant coating systems, Military Specification MIL-C-83231.

(1) Class A, Type I, is a rain erosion resistant coating furnished in complete kit form.

(2) Class A, Type II, is a rain erosion resistant coating with antistatic surface treatment to minimize radio noise from precipitation charging of the coated surface furnished in complete kit form.

b. Thermally reflective coating system, Military Specification MIL-C-83445, are classified as follows:

(1) Class I rain erosion resistant thermal coating furnished in kit form complete with primer, erosion resistant (electrically nonconductive) component, and diluting solvent.

(2) The coatings are intended for exterior laminated plastic parts of aircraft for protection from rain erosion and thermal energy while the aircraft is in flight. These coatings cannot be used on radomes and other plastic parts that have a requirement for protection against static electrical charges because they are not electrically conductive.

c. Provide rain erosion protection on wing tip assemblies and other aircraft parts constructed of fiber laminates which present an in-flight angle of impact of 15 degrees or more. Do not provide rain erosion protection on leading edges and areas of radomes and antenna housings unless specifically directed in 6-17. Head-on impact of a flat surface is defined as a 90-degree

angle of impact. Angular impact determinations must be based on the position of the part when in a normal inflight attitude.

NOTE

Only the amount of material to be used within the following 8 hours should be accelerated at one time. Material that has been mixed and allowed to stand beyond this period of time should be discarded. Do not attempt to thin any coating material which has gelled beyond brushable use. Keep containers tightly covered when not in use.

6-32. PREPARATION OF SURFACE.

WARNING

Aliphatic Naphtha, TT-N-95

Aliphatic naphtha is flammable and toxic to eyes, skin, and respiratory tract. Wear protective gloves and goggles/face shield. Avoid repeated or prolonged contact. Use only in well ventilated areas (or use approved respirator as determined by local safety/industrial hygiene personnel). Keep away from open flames, sparks or other sources of ignition.

WARNING

Acetone

Acetone is extremely flammable and toxic to eyes, skin, and respiratory tract. Wear protective gloves and goggles/face shield. Avoid repeated or prolonged contact. Use only in well ventilated areas (or use approved respirator as determined by local safety/industrial hygiene personnel). Keep away from open flames, sparks or other sources of ignition.

Failure to observe these precautions con result in serious injury or systemic poisoning of personnel.

a. Repair surfaces with pits, scars, scratches, or other minor defects in accordance with TM 55-1500-204-25/1. It has been found that coatings are more satisfactory if the surface to receive the coating is smooth but not glossy.

b. Remove surface gloss with a fine grade of emery or sandpaper, No 240 grit, after sanding lightly with a coarser grade of abrasive so as to finely and uniformly scratch the surface. Remove sanding dust with a clean, lint-free cloth dampened with aliphatic naphtha, TT-N-95, followed by an acetone, ASTM-D329, wipe used with the coating. Assure that surface is completely dry before coating application.

WARNING

Since materials used in coating removal and application procedures are flammable and toxic in sufficient concentration, standard precautions such as fire prevention and adequate ventilation shall be exercised.

6-33. APPLICATION OF PRIMER AND COATING. Plastic parts to be coated with erosion resistant coatings should be processed in a sheltered area free from dust, and protected from weather conditions. Best results are obtained if the coatings are applied at relative humidities below 60 percent.

a. Application of Coating System, Military Specification MIL-C-83231.

(1) Mixing. Components of classes A and B, types I and II coatings shall be individually mixed in accordance with the manufacturer's instructions. The resulting individual mixtures shall be smooth, homogeneous materials free from lumps, gelling, seeding, separation or other objectionable characteristics.

(2) Pot Life. Classes A and B coatings shall have a minimum pot life of 4 hours at standard conditions. At the end of the 4 hour period, the coatings shall show no signs of lumping, seeding, separation or an increase in viscosity of more than 20 percent from the initial viscosity.

(3) The class A and B coatings shall be applied in accordance with the manufacturer's instructions to a total dry film thickness of 12 to 14 mils. The total application time, including priming and intervals between coatings shall not exceed 8 hours. The tack free drying time for class A coatings shall not exceed 4 hours after application of the final coat. The tack free drying time for class B coatings shall not exceed 10 hours after application of the final coat.

(4) The rate-of-cure of the class A and B coatings shall have a maximum set-to-touch or recoat time of one hour. For class B materials, the manufacturer shall furnish instructions for catalyzing or accelerating the polyurethane prepolymer materials for a temperature range from 10°C to 35°C (65°F to 95°F) and a relative humidity range from 40 percent to 75 percent.

(5) Class A coatings shall be fully cured within 5 days and shall be free of pinholes, cracks,

bubbles or other .lm irregularities. Class B coatings shall be fully cured within 10 days and shall be free of pinholes, cracks, bubbles, or other film irregularities.

b. Application of Coating System, Military Specification MIL-C-83445.

(1) Mixing. Components of class 1 and 2 coatings shall be individually mixed in accordance with the manufacturer's instructions. The resulting individual mixtures shall be smooth, homogeneous materials free from lumps, gelling, seeding, separation or other objectionable characteristics.

(2) Pot Life. Class 1 and 2 base coating and topcoating solutions shall have a minimum pot life of 4 hours after catalyzation. At the end of the 4 hour period, the coatings shall show no signs of lumping, seeding, separation or an increase in viscosity of more than 20 percent from the initial viscosity when tested in accordance with 4.7.9 and Table 6-1.

(3) The coatings shall be applied in accordance with the manufacturer's instructions to a total dry film thickness of 12 to 14 mils. The total application time, including intervals between coatings shall not exceed 8 hours and the tack free drying time shall not exceed 10 hours after final application of the coatings.

(4) The rate-of-cure of the coatings shall have a maximum set-to-touch or recoat time of one hour. The manufacturer shall furnish instructions for catalyzing or accelerating the polyurethane base materials for a temperature range from 65° to 95°F (18° to 35°C) and a relative humidity range from 40 to 75 percent.

(5) Class 1 and 2 coatings shall be fully cured within 5 days and shall be free of pinholes, cracks, bubbles or other film irregularities.

6-34. PATCHING OR RETOUCHING DAMAGED COATINGS.

WARNING

Acetone

Acetone is extremely flammable and toxic to eyes, skin, and respiratory tract. Wear protective gloves and goggles/face shield. Avoid repeated or prolonged contact. Use only in well ventilated areas (or use approved respirator as determined by local safety/industrial hygiene personnel). Keep away from open flames, sparks or other sources of ignition.

WARNING

Aliphatic Naphtha, TT-N-95

Aliphatic naphtha is flammable and toxic to eyes, skin, and respiratory tract. Wear protective gloves and goggles/face shield. Avoid repeated or prolonged contact. Use only in well ventilated areas (or use approved respirator as determined by local safety/industrial hygiene personnel). Keep away from open flames, sparks or other sources of ignition.

Failure to observe these precautions can result in serious injury or systemic poisoning of personnel.

Sand damaged surface to a feather edge. Extend sanded surface beyond damaged area approximately 1 inch. Clean sanded surface with a clean, lint-free cloth dampened with aliphatic naphtha followed by an acetone wipe, Federal Secifications TT-N-95 and ASTM D329. Immediately wipe with a second dry, clean, lint-free cloth to remove residue and allow to dry thoroughly. Apply primer and coating(s) as previously directed herein. Exercise extreme caution to prevent uneven and excessive buildup of coating when making repairs to radome coatings. Excessive coating thickness will reduce radome electrical transmission efficiency and in the case of doppler and fire control radomes, could result in beam deflection errors beyond tolerable limits.

6-35. REMOVAL OF COATINGS.

WARNING

METHYL ETHYL KETONE
Keep away from heat and open flame.
Keep container closed.
Use with adequate ventilation.
Avoid prolonged breathing of vapors.
Avoid prolonged or repeated contact with skin.

Failure to observe these precautions can result in serious injury or systemic poisoning of personnel.

a. Prior to application of neoprene, inspect radomes for damages that penetrate face plies. To prevent the solvent from entering the radome core, cover damages that penetrate face plies with tape, Federal Specification PPP-T-60. Extend tape approximately 3 inches beyond edges of damaged area. Do not attempt to remove coating under the tape. This coating will be removed either with face ply when damaged area is repaired, or by hand sanding.

b. Removal of erosion resistant coatings shall be accomplished by one of the following methods:

WARNING

Handling and use of coating removal solvents requires normal precautions commensurate with their toxicity and flash.point characteristics. These solvents tend to dry out the skin and may cause skin disorders to some individuals. Therefore, protection to hands shall be provided by appropriate gloves or gauntlets.

(1) Cover coating with a felt pad or rags and saturate with 50/50 mixture of toluene, Federal Specification TT-T548, and methylethyketone, Federal Specification TT-M-261. Maintain covering in a saturated condition until coating has loosened to the extent that it can be peeled off or scraped off with a phenolic or plastic hand scraper. If a hand scraper is used, care must be exercised to prevent scratching the surface of the radome. Remove residue with a cloth dampeness with toluene or methylethylketone.

WARNING

Electrically ground table and pump to guard against static discharge.

(2) The application of a continuous stream of solvent mixture is an alternate method of removing coatings. Suggested equipment consists of a metal table of suitable size with a metal grid top and provisions for draining the solvent through a filter to a low pressure explosion-proof fluid pump. Position radome or part on table with pipes or rods between radome and grid top. To prevent possible delamination of solid laminate edge bands, do not place part directly on, or drag it across, the metal grid table top. Cover coated area as previously described and apply a stream of solvent mixture until coating loosens. Remove coating as previously described.

NOTE

Solvent mixture must not contain more than 50 percent methyethylketone, Federal Specification TT-M-251. Methyethylketone in excess of 50 percent will be harmful to materials. Toluene, Federal Specification TT-T-548, used by itself will satisfactorily remove neoprene coating, however, the reaction time is longer than that for methylethylketone-toluene mixture.

6-36. REMOVAL OF PAINT FROM RADOMES.

Do not remove paint from radomes.

WARNING

When stripping paint adjacent to installed radomes, it is mandatory that paint strippers and solvents do not contact the fiberglass, and are not permitted to flow into edge band areas of radomes. (Refer to Chapter 6.)

6-37. PROTECTIVE COATING FOR THE POLYCARBONATE AND PVC/ACRYLIC POLYMER COVERING ON THE CANOPY EGRESS SYSTEM.

a. Clean the canopy egress system covering with alcohol, Federal Specification 0-E-760.

b. Sand surface with 400 grit sandpaper.

c. Clean the covering again with alcohol, Federal Specification 0-E-760.

d. Apply Lexcote G-3483 per manufacturer's instructions.

e. Infrared heat lamp may be used to aid in the curing of the Lexcote .

CHAPTER 7
LETTERING AND MARKING

SECTION I MARKINGS

7-1. GENERAL.

a. The color for the majority of markings and lettering will be aircraft black, shade number 37038, MIL-DTL-64159 or MIL-DTL-53039, on aircraft green or aircraft grey background. The crew areas will normally be marked in orange-yellow, number 33538, MIL-DTL-64159 or MIL-DTL-53039 on aircraft black background. See details in Chapters 9 and 10.

b. Unless otherwise speci.ed, use 1/2-inch high Arabic numerals and capital letters for markings. If lettering shown in Chapters 9 and 10 cannot be made on standard Army stencil cutting machine due to odd size letters, go to the nearest standard size. For example (shown in figure 8-2), 5/8 in., replace with 1/2 inch. Markings and lettering may be reduced in size to suit combat operation.

c. Center identification lettering UNITED STATES ARMY as nearly as possible on each side of fuselage. Use 6-inch vertical block letters. Letter dimensions, positions, and locations for each aircraft will be in accordance with instructions in Chapter 8. When identification lettering UNITED STATES ARMY does not fit on allotted space, use U.S. ARMY or ARMY.

CAUTION

Cutting of fuel, oil, hydraulic, or oxygen lines, or electrical wiring under crash conditions may result in a fire or explosion or increase the severity of an existing fire. Such possibilities will be taken into consideration when emergency escape areas are being chosen for identification markings.

d. Outline corners of emergency exits and rescue exit areas with right-angle corner bands 1 inch wide and 3 inches long at each leg. Paint corner marks with black, shade number 37038, Military Specification MIL-DTL-64159 or MIL-DTL-53039.

SECTION II INSIGNIA: GENERAL

7-2. LETTERING AND MARKING MATERIALS.

a. Apply insignia with approved paint as applicable and compatible with the existing finishes.

b. Use decals conforming to paragraph 6-5, in lieu of paint, if approved by AMCOM, ATTN: AMSAM-DSA-AMSS-FW, Redstone Arsenal, AL 35898–5000.

7-3. GENERAL.

a. The National Star Insignia will not be applied to tactical aircraft. The National Star Insignia, of the design shown in figure 8-1, will be placed on other Army aircraft where required as part of an authorized paint scheme.

b. The insignia will portray an insignia white, five-pointed star located within an insignia-blue circumscribed circle. This is referred to as the

basic blue circle. An insignia-white rectangle will be located on each side of the star. The top edge of the rectangles will form a straight line with the upper edges of the horizontal opposed star points. An insignia-red horizontal stripe will be centered in each end of the rectangle. The basic blue circle will outline the entire insignia.

c. The dimensions of the insignia will be determined by the diameter of the basic blue circle, which is standardized in multiples of 5 inches.

7-4. COLORS.

a. Gloss colors for insignia will conform to applicable shade numbers of Federal Standard 595. Insignia red will conform to shade No. 11136. Insignia blue will conform to shade No. 15044. Insignia white will conform to shade No. 17875.

b. Corresponding lusterless colors will also conform to applicable shade numbers in Federal Standard 595.

7-5. APPLICATIONS.

a. Mask off area and apply National Star Insignia over finish top coat. Avoid any method that cause ridges in the application of insignia and markings.

b. Remove masking tape as soon as practicable, but in any case, not later than 2 hours after taping, in order to avoid staining the painted surface.

7-6. DELETED

7-7. HELICOPTERS.

a. Location.

(1) Four National Star Insignia will be applied on the aircraft fuselage. The insignia will be located so that it will be visible from each side, from above, and from below. Due to various design configurations, the insignia will be located as near the center of the aircraft as is practical so as to provide maximum discernment. Such locations will be standardized on like model and series helicopters. The insignia may be moved the minimum distance required to avoid high heat areas. The insignia may extend over doors and emergency exits but will not be applied over windows or other such openings which would change the design of the insignia.

(2) The National Star Insignia will be applied on vertical surfaces so that in normal flight attitudes, the top point of the star will point forward in the direction of flight.

(3) If the main fuselage section is not large enough to accommodate the minimum size specified, the star insignia may be placed on such other parts of the fuselage as will permit its being readily seen.

(4) If space limitations and configurations permit, additional insignia will be applied to the nose of helicopters to provide more positive air-to-air identification.

b. Dimensions of Fuselage Insignia

(1) The dimensions of the insignia will be determined by the diameter of the basic blue circle. The insignia will not exceed 50 inches in diameter, nor be less than 10 inches. The selected insignia size will be nearest to, but not exceed, 75 percent of the fuselage height at the point of application. Symmetry should be maintained when applying the insignia on each side of the fuselage.

(2) If the above size is impractical for application, the most practical standard diameter will be selected.

SECTION III MEDICAL INSIGNIA

7-8. AIRCRAFT. Those aircraft assigned to the Army Medical service for use as ambulance aircraft will be painted to the standard tactical paint scheme and will be marked with a red cross centered on a white field as shown in Chapter 9. The cross shall be painted MIL-DTL-64159 or MIL-DTL-53039, Aircraft Red, #31136.

7-9. AIRCRAFT FIRST AID KITS AND LITTERS.

a. First Aid Kits.

(1) When painting identification markings on aircraft first aid kits, the red cross will be com-

posed of five 1/2 inch squares arranged in a symmetrical cross. The lettering will be 1/2 inch high and National Stock Number will be 5/6 inch high with 1/4 inch space between lines (See figure 8-6). Markings will be applied using MIL-DTL-64159 or MIL-DTL-53039, aircraft red #31136 for the cross, MIL-DTL-64159 or MIL-DTL-53039, and aircraft black #37078, for the lettering.

(2) If the kit is enclosed in a cover or installed in a bracket or holder which hinders the visibility of the marking on the kit, an additional red cross will be placed on such cover, bracket, or holder. If this is not practical, the red cross will be placed on the structural part of the aircraft near the cover, bracket, or holder.

(3) If background areas on which the red cross is to be painted will impair visibility of the cross, a solid white square equal to or slightly larger than the overall dimensions of the red cross may first be painted in that area to provide a contrasting background. Use MIL-DTL-64159 or MIL-DTL-53039, aircraft white #37875.

b. Litters. Paint red cross markings on litters using appropriate colors of paint MIL-DTL-64159 or MIL-DTL-53039. Letters, where painted, will be painted in MIL-DTL-64159 or MIL-DTL-53039 forest green.

SECTION IV COMMAND AND ORGANIZATIONAL INSIGNIA AND NAME

7-10. GENERAL. Command and/or organizational insignia, which has previously been authorized by Headquarters Department of the Army, may be applied to Army aircraft upon approval of major Army field commanders. Using organizations will be responsible for the application and subsequent removal of insignia before transfer of the aircraft to another activity. Depot maintenance facilities will not replace command and/or organization insignia. Such insignia will be applied over MIL-DTL-64159 or MIL-DTL-53039 paint.

7-11. COLOR, LOCATION, AND SIZE.

a. Color. Because bright colors will aid in the visual acquisition of combat aircraft and degrade the effectiveness of the standard Army tactical paint schemes, unit and organizational insignia on tactical aircraft will only be painted lusterless black and olive drab. Non-tactical aircraft will have these insignia painted only in authorized topcoats and colors approved by Headquarters, Department of the Army.

b. Location. On fixed wing aircraft, the command insignia will be applied on the aircraft in the following manner. They will be no larger than 12 inches wide by 15 inches tall, and be in proportion to the patch or distinctive crest that they represent. Decals will be applied with their vertical center 9 3/4 inches aft of the pilot/co-pilot “D” window (measured from the “D” window’s aft most point) along the window’s bottom. They will be horizontally centered along an imaginary longitudinal line running through the centers of the “D” window and the first passenger window. On helicopters, the insignia will be applied to each side of the fuselage, aft of the radio call numbers. However, on some helicopters, adequate space may not be available at that exact location. In such cases, the insignia or lettering should be positioned as near as possible to the specified location.

c. Size of Insignia. If placed on the verticle stabilizer, insignia will not exceed 75 percent of the height of the allocated portion of the vertical stabilizer. If placed above the cabin windows, the insignia will not exceed the size of the U.S. Army on the vertical stabilizer.

d. Size of Lettering. Lettering for the name of the command or home station will not exceed two-thirds of the size of the U.S. ARMY on the vertical stabilizer.

Section V. IDENTIFICATION LETTERING

7-12. GENERAL.

a. Style. Unless otherwise specified. identification lettering, ARMY, U.S. ARMY, or UNITED STATES ARMY, will be presented in vertical block letters. All letters should be of the same block design.

b. Dimensions.

(1) For tactical TDA helicopters and fixed wing aircraft, the height and location of lettering may vary on aircraft of different size and model and space available, but the size and location of this marking will be the same on all aircraft of the same model.

(2) For non-tactical TDA helicopters and fixed wing aircraft, letters will be of uniform size, with the letters separated from the numerals with a dash. Depending on the fuselage surface available, letters will be in the largest size practicable: however, in no case will they be smaller than 8 by 12 inches, or larger than 32 by 48 inches. The height of identification lettering near the star will be the diameter of the basic blue circle. Exception of these dimensions will be taken when the alloted space does not allow for the dimensions prescribed herein.

c. Uniformity. Aircraft identification lettering will be standardized and uniformity maintained on similar type aircraft in each organization.

d. Restriction. The Army identification lettering and the National Star Insignia when appropriate, will not be altered in location, dimension. or configuration from the specifications reflected herein to accommodate any major command and organizational insignia or marking.

7-13. DELETED

7-14. HELICOPTERS, NON-TACTICAL.

a. General. The identification lettering on the fuselage of all Department of the Army, Army National Guard, and United States Army Reserve helicopters will consist of the letters ARMY placed on each side of the fuselage.

b. Specific Application. The ARMY markings will be placed on each side of the fuselage of helicopters as shown in appropriate illustrations.

NOTE

The paint to be used for application of letters and markings specified in Sections VI thru X shall be the same as that used to finish the surface to be marked.

Figure 7-1, Page 7-5 DELETED

SECTION VI WARNING STRIPES AND SIGNS

7-15. PROPELLER AND ROTOR BLADE WARNINGS, NON-TACTICAL AIRCRAFT.

NOTE

Provisions of section VI are subject to an international standardization agreement (Cento Stang 3250).

a. Exterior. That area of the fuselage which is behind the plane of the propeller path will be marked with a gloss black paint # G-2017, mfg. US Paint 3 inches wide, extending completely around the fuselage, except through anti-glare areas and when it does not interfere with standard ARMY markings or insignia. A 3-inch space will be maintained between the ends of the propeller warning stripe and any standard ARMY marking or insignia. The word DANGER will be applied perpendicular to each side of the warning stripe, with an arrow pointing from the word DANGER toward the stripe. Letters in the word DANGER will be2 inches high and the arrows will be 4 inches long. The word DANGER and the arrows will be gloss black paint #G-2017, mfg. US Paint. This marking applies to all non-tactical multiengine aircraft.

b. Interior. Openings used as exits within 6 feet of the propeller disc will have an insignia-red warning stripe 3 inches wide painted on their inside surface. Stripes will extend from the center of the fuselage or the top of the opening, whichever is higher, to the lowest extremity of the opening. The word PROPELLER, reading vertically from top to bottom, will be super-imposed on the stripes in glossy insignia-white letters 2 inches high, placed at suf.ciently frequent intervals to indicate the dangerous areas. The word DANGER in glossy insignia-red will be applied perpendicular to and centered with respect to the word propeller on each side of the stripe, with an insignia-red arrow pointing toward the stripe. Letters will be 2 inches high and arrows 4 inches long.

c. Tail Rotor Markings, Non-tactical.

(1) Tail rotor blades. See Chapter 6.

(2) Tail rotor warning markings, non-tactical. See Chapter 9.

d. Tail Rotor Markings, Tactical.

(1) Tail rotor blades. See Chapter 6.

(2) Tail rotor warning markings. Paint warning arrows Aircraft Black, #37038. Paint word DANGER above warning arrow in Aircraft Black #37038. See Chapter 9 for dimensional data.

7-16. Deleted

7-17. NOISE HAZARD LEVELS AND STENCILS.

a. Sound pressure levels in Army aircraft during some operating conditions exceed the Surgeon General's hearing conservation criteria, as defined in TB MED 251. Hearing protection devices, such as the aviator helmet or ear plugs, are required to be worn by all personnel in and around the aircraft during its operation.

b. Noise hazard stencils will be applied to provide conformance to the standard details prescribed in MIL-STD-1474 (Noise Limits for Army Material). The stencil, in the orange-yellow #33538 shall read as shown in figure 7-2.

c. The stencils will be applied in Army aircraft and located so they are visible to all passengers who are not normally required to wear aviator helmets or headphones. The aircraft affected, include the location of stencils are as follows.

(1) Deleted

(2) Deleted

(3) CH-47 Helicopters. Apply stencil each side of the interior surface of aircraft and locate over the back of troop seats above each window (4 locations on each side). (See paragraph d for stencil information.)

(4) Deleted

(5) Deleted

(6) OH-58 Helicopters. Apply stencil to blanket assembly at approximately FS 97.50 and WL 67.

(7) C-12 and RC-12 Aircraft.

(a) Attach label (P/N 7690-EG-000-2) to the exterior surface centered on the passenger door that is on the left side of the aircraft.

(8) AH-64 Aircraft. Apply stencil to right side lower area of both crewstations.

(9) Deleted

(10) UH-60 Helicopter.

(a) Apply stencil to the interior surface of cargo door centered on the center post between the windows (both sides).

(b) Apply stencil to interior surface at station 300, water line 244 (both sides).

d. The adhesive backed labels are for use on aircraft hard surfaces only. For aircraft requiring labels over fabric-lined or acoustical-blanketed interior areas, cut or procure a stencil locally. For size and wording of stencil, see figure 7-2.

e. The stenciled letters shall be lusterless black for gray backgrounds and lusterless orange for black backgrounds.

f. Apply or remove pressure sensitive labels in accordance with instructions in TM 55-1500-204-25/1.

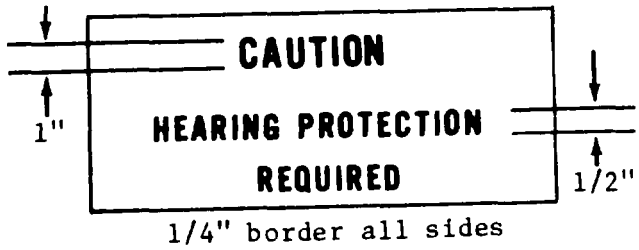

Figure 7-2. Size and Wording of Stencil

Section VII. RADIO CALL NUMBERS AND PREFIXES

7-18. RADIO CALL NUMBERS.

a. General.

(1) Radio call numbers for Army aircraft will consist of five numerals, Radio call numbers will be derived from the aircraft serial number. Vertical block-type Arabic numerals will be used when applying radio call numbers.

(2) First numeral of the contract year and the hyphen in the aircraft serial number will not be used in radio call numbers. If five numerals. are not available in the aircraft serial number, zeros will be used to produce the required five numerals. Should more than five numerals be available, the last five numerals of the aircraft serial number will be used. Example: For serial number 59-5434, use 95434: for serial numbers 59-653472, use 53472: for serial number 59-7, use 90007: for serial number 60-7, use 00007.

(3) Since numbers once assigned may reach an age of 10 years or more, there is a possibility that two sets of radio call numbers could be identical. To prevent this. the symbol (0) will precede derived numbers of more than 10 years of age.

Example: for serial number 50-7, use 0-00007.

(4) All radio call panels installed with aircraft, including helicopters, will be revised to reflect the five radio call numbers applied on the aircraft, and the six numerals if aircraft are over 10 years old.

(5) Radio call numbers will be applied on both sides and on each outboard side, as applicable, of vertical stabilizer and rudder assembly, except that on helicopters they will be applied to sides of fuselage or vertical fin.

(6) Radio call numbers on tactical aircraft will be 6 inches high. If space is not available for this standard size, the size will be of largest size which can be applied and compatible with existing space. For non-tactical aircraft only, the suggested minimum size for space occupied by one call number or designator is 12 inches high by 8 inches wide. If space is not available for this standard size, the size will be of largest size which can be applied and compatible with existing space. Alternate numerical size will be established by the width equaling two-thirds the height, and the stroke and space will equal one-sixth the height. Vertical block-type numbers will be used for radio call numbers.

b. Decals. Decalcomanias conforming to paragraph 6-5 may be used in lieu of paint when applying and maintaining radio call numbers on non-tactical aircraft.

c. Prefix — National Guard. Army National Guard will have a compound prefix in black lusterless letters consisting of the state abbreviation (table 8-4) followed by a dash and letter "NG" in the space normally occupied by “US ARMY” above the radio call numbers, Identification will. be applied on vertical fin of fixed wing aircraft and above or adjacent to call numbers on rotary wing aircraft depending on space available. Letters wil be 6 inches high in black color shade 37038. Where space is not available, the “NG” and state abbreviation will be reduced to 2/3 its size to accommodate space available

Section VIII. SERIAL NUMBER AND FUEL SPECIFICATION

7-19. FUSELAGE. The aircraft model designation, serial number and fuel data will be applied to all Army aircraft. See Chapters 9 and 10 for specific guidance for a particular aircraft. Use paragraph 7-20 if no specific guidance for a particular aircraft is shown in Chapters 9 and 10.

7-20. MARKINGS. Show aircraft type , serial number and specific fuel from operator’s manual.

a. Example.

U.S. Army UH-1D *
U.S.A. Serial No. XX-XXXX

Service this aircraft with MIL-T-5624 Grade JP-4* Aviation Fuel. If not available, refer to TB 55-9150-200-24 for Alternate (Emergency) * fuel .

* Underlined items applicable to specific aircraft types.

b. Location. On left side of aircraft in vicinity of cockpit window.

c. Letters and numerals to be 7/8 in. plus or minus 1/8 in. for model and serial number and 1/2 in. for fuel information.

SECTION IX MARKINGS FOR EMERGENCY ENTRY OR EXIT

7-21. GENERAL. Markings for emergency exit from aircraft will be orange-yellow shade 33538. Emergency entry will be marked with a broken band in the colors speci.ed in Chapters 9 and 10.

7-22. SECONDARY OPENINGS. Secondary openings, such as auxiliary exits, windows, and navigator's domes are usually smaller than primary openings, making entrance or exit more difficult. If the structure immediately surrounding secondary openings is free from heavy structural members (such as bulkheads and main longitudinal members), oxygen, fuel, and oil lines, and battery leads, it will be marked with a broken band in the colors specified in Chapters 9 and 10. The band will be placed at the extreme boundary of the above described area, both inside and outside of the fuselage. Segments of the broken band will be 1/2 inch wide, 1 inch long and approximately 12 inches apart. Where the band will be covered by soundproofing (or lining), the soundproofing (or lining), will also be marked. CUT HERE FOR EMERGENCY RESCUE will be marked or stenciled inside of, parallel with, and adjacent to, the broken band identifying the area on the outside of the aircraft where forced entry can be made for rescue purposes. CUT HERE FOR EMERGENCY EXIT will be marked on a similar location inside the aircraft. Letters will be 1 inch high. If the letters (on the skin) are covered by soundproofing (or lining), the letters will also be marked on that part of the soundproofing (or lining) that covers that area.

7-23. RELOCATION. Each aircraft will be visually inspected for areas which may be cut through for rescue when entrance or exit cannot be made in any other manner. Visual inspection must be used, as relocation and reinstallation of equipment and furnishings may have been made which would not be indicated on the installation drawing of the aircraft. These areas should be as close to normal stations of personnel as possible, except that they will not be placed at spots where personal injury to occupants probably would result from forced entry. Corner markings will be painted or stenciled on the inside and outside of the fuselage marking the limits of these areas. The horizontal and vertical bars of the corner markings will be 3 inches long and 1 inch wide. CUT HERE FOR EMERGENCY RESCUE will be painted or stenciled in the center of the four corner markings on the outside of the aircraft and CUT HERE FOR EMERGENCY EXIT will be placed in a similar location inside the aircraft. Letters will be 1 inch high. Soundproofing also will be painted if it covers markings or words. These markings need not be placed on aircraft so constructed that openings could not be cut with safety.

CAUTION

Do not use a knife or metal blade on aircraft during application procedure.

7-24. ESCAPE PANELS — INTERNAL MARKINGS.

a. Markings for identification of escape hatches, doors, and exits on the inside of aircraft will be marked orange-yellow, shade No. 33538.

b. An orange-yellow #33538 broken band will mark the complete periphery of escape exits or doors. The broken band will be only on the door, and not on the frame of the door. Segments of the broken band will be 1/2 inch wide, 1 inch long, and approximately 12 inches apart (See MIL-A-25165). When the soundproofing (or lining) will cover the identification marking band on the inside of the aircraft, it will also be appropriately marked.

c. The words EMERGENCY EXIT in orange-yellow No. 33538, will be marked or stenciled on the escape hatch, door, or exit, in the most readily visible location. Letters preferably will be 2 inches high, and will be not less than 1 inch. If the letters (on the skin) are covered by soundproofing (or lining), the letters also will be stenciled on that part of the soundproofing (or lining).

d. Small handles or levers used to actuate doors or hatches shall be identified by alternate orange-yellow and black stripes, 1/8 inch in width, painted on the background of the panel. Alternate orange-yellow and black stripes 1/8 to 1/4 inch in width, shall be applied directly onto large levers or exit controls. Background striping shall be applied at a 45-degree angle from the vertical, rotated clockwise. Handles and small levers shall be striped with alternate colored rings. The striping shall not interfere with other types of markings or codings. Suitable descriptive wording, readily visible, will be marked or stenciled on the door or structure of the aircraft, whichever is nearer to the emergency release, to identify and explain its operation. This wording preferably will be 1 inch high, and will be not less than 1/2 inch high. Standard English terminology will be used, such as PULL, PUSH, TURN, or SLIDE.

e. Exits which are adequate for air, ground, and ditching escape shall have the words EMERGENCY EXIT centered in the most visible location on the inside of the door or hatch.

f. Exits which are not adequate for all three phases of escape shall be marked EMERGENCY EXIT, followed by the words AIR, GROUND, OR DITCHING USE ONLY, as applicable.

Example: GROUND USE ONLY, GROUND, AND DITCHING USE ONLY, etc.

7-25. ESCAPE PANELS — EXTERNAL MARKINGS (NON-TACTICAL AIRCRAFT).

a. Markings identifying escape hatches, doors, and exits on the outside of aircraft will be marked gloss yellow on dark surfaces, and gloss black on light surfaces. If enamel is used, it will conform to Federal Specification TT-E-489; if urethane is used, it will conform to Military Specification MIL-C-83286.

b. All external releases for operation of emergency exit panels will be marked EXIT RELEASE on the outside of the aircraft to facilitate quick identification. The wording that describes the operation of the exit release will be standard English terminology, such as PULL, PUSH, TURN, or SLIDE. Letters preferably will be 2 inches high and will be not less than 1 inch high.

SECTION X MISCELLANEOUS MARKINGS

7-26. GENERAL. Markings of interior and exterior surfaces, labels, decals, placards, and stencils will be applied in accordance with manufacturer's instructions. The materials (polyurethane, lacquer or enamel) used applying the background will be the same as that used to finish the surface. Installations in aircraft cockpits of placards required by TB's or MWO's will be accomplished by coating the back of the placard with a clear lacquer, varnish, or similar substance. The placard will be further secured by an additional coat of clear lacquer, varnish, or similar substance over the front of the placard. If desired. such placards may be made of photosensitive anodized aluminum. Military Specification MIL-P-10524, Type H, or other metal, and attached to the surface of the aircraft cockpit by bolts or screws.

7-27. BILINGUAL MARKINGS. Bilingual markings will be applied to aircraft assigned to remote areas when authorized by the major Army field commander.

7-28. MARKINGS FOR TANK AREAS AND INTERNAL STATION MARKINGS.

a. Data Markings. Additional data, such as coolant mixture, water, alcohol mixture, oil tank level restrictions, and fuel grade (specified) will be applied near the filler caps in letters 1/2 inch high.

b. Fuel Nozzle Groundings. The grounding receptacle symbol indicates where the grounding plug shall be inserted to accomplish the grounding process. The symbol and lettering will be painted MIL-DTL-64159 or MIL-DTL-53039, aircraft black, number 37038 per MIL-C-83413/9-2. See figure 7-12 for dimensions.

c. Fuel Tank Filler Areas. Fuel tank filler caps will be painted the same as the color scheme of the aircraft. A 1 inch wide ring (annulus) with a 6.0 inch inside diameter (or as indicated in Chapter 9 or 10) will be painted around the filler cap, black for tactical aircraft, red for all other paint schemes.

d. Internal Station and Compartment Markings. When applicable, internal station and compartment markings will be retained. Aircraft -10 or the -20 manuals will be used to determine station location. Station markings will appear as indicated in figure 8-4.

7-29. OXYGEN OUTLETS. Mark all oxygen outlets — WARNING, NO SMOKING WHILE OXYGEN IN USE.

7-30. LIFT POINTS. All lift points will be indicated by an arrow pointing to the lift point. The word LIFT will be marked above the lift point in letters 1/2 inch high. Notations, such as NO LIFT or NO PUSH, should be applied on areas of aircraft which would be subject to damage by such action.

7-31. STRUT NUMBERS. All wing struts will be numbered with the part number. The number will be located at the lower end, with the top of the letters and numerals forward.

7-32. ELECTRICAL CONNECTIONS. A warning will be painted at the points where it is necessary to break electrical connections when removing wings, tail booms, or other assemblies containing hidden wiring. The letters will be of sufficient height to provide a permanent, distinct, and legible marking.

Example:

CAUTION

Disconnect electrical wiring before removing wings.

7-33. WALKWAYS. Areas immediately adjacent to the walkways will be marked NO STEP in accordance with chapters 9 and 10.

7-34. NATO SYMBOL MARKINGS OF AIRCRAFT SERVICING POINTS.

a. The U.S. Army has ratified a NATO Standardization Agreement (STANAG) NO. 3109., ABC AIR STD 51/2, and STANAG 3230 which promulgates standard aircraft markings. The standard markings will facilitate cross-servicing of NATO aircraft, thereby insuring more effective cross-service operations. NATO symbols will be retained only on aircraft assigned to NATO areas.

b. The servicing and precautionary markings of Army aircraft will be in accordance with the symbols shown and described herein.

c. Symbols will be approximately 4 inches in the longest dimension, except where otherwise specified. However, smaller sized symbols may be used if required by the item or area to be marked. (See Chapter 8).

d. Lettering which supplements the symbols will be in the scale of 1 to 4 in relation to the symbol. (See Chapter 8).

e. Access doors or panels to the servicing points will be marked with appropriate servicing symbol or symbols.

f. Normally markings will be in black, except ground handling and safety point which will be marked in orange.

g. Colors will be in accordance with Federal Standard FED-STD-595. The following basic colors, which are specified with symbol or function, will be used unless otherwise indicated:

COLOR	NON-TACTICAL	TACTICAL
Black	No. 17038	37038
White	No. 17875	37875
Red	No. 11136	31136
Orange-yellow	No. 13538	33538
Yellow	No. 13655	33538
Green	No. 14110	34110

h. For NATO symbols or codes on fuels and lubricants, refer to TB 34-9-25.

i. The symbols and colors are in accordance with international agreements. (See Chapter 8). Any changes or recommendations will be processed through departmental standardization offices so that appropriate action may be taken respecting the international agreement concerned.

7-35. AIRCRAFT PLATES FOR GENERAL OFFICERS.

a. General. If desired, star plates may be displayed on Army aircraft. Star plates will be mounted on both sides of the aircraft; however a specific location for mounting the plates is not prescribed herein due to the various design characteristics involved.

b. Material and Size, Plates will be constructed of sheet metal 6 inches high by 9 inches wide.

c. Method of Marking. Grade will be designated by five-pointed white stars, 2 inches in diameter, with one point upward, equally spaced on the horizontal center of the line of the plate. The plates will be painted with gloss red, shade No. 11136, and the 5 pointed stars will be painted gloss white, shade No. 17875.

7-36. JETTISONABLE COMPONENTS.

a. Canopies. Jettisonable aircraft canopies will have the aircraft serial number stenciled on the outside of the canopy frame, on the left-hand side, 6 inches from forward end. using 1-inch numbers and letters provided sufficient space is available. If sufficient space is not available to accommodate 1-inch numbers and letters, they will be as large as space permits. Also, aircraft utilizing cartridge actuated devices will be marked in accordance with Chapter 10.

b. Ejection Seats. A black equilateral triangle with 9-inch sides and with apex pointing downward, with the word DANGER on each side of the triangle, will be applied on each side of the fuselage. The words EJECTION SEAT in black letters will be painted above the triangle. Additional notations will be optional.

7-37. FLUID LINE IDENTIFICATION.

Fluid lines will be identified as specified in Military Standard MIL-STD-1247.

7-38. STORAGE BATTERIES.

The notation “BATTERY LOCATION” with location given will be placed on the left side of the fuselage or tail boom as viewed from the rear of the aircraft. The label “BATTERY LOCATION” may be omitted only if the battery access is located where label would normally be placed.

a. The fore and aft location of the marking will be approximately in line with the trailing edge of the wing.

b. The vertical location of the marking will be at a point 2 to 3 feet off the ground with the airplane in the wheels-up position and resting on the ground, or in the case of airplanes having fixed landing gear, with the landing gear collapsed. When battery is accessible via a panel or door, the notation "BATTERY ACCESS" will be marked in block letters not less than 1/2 inch high on battery access door. In the event of interference with windows, enclosures, etc. the marking will be placed as near the above mentioned location as practicable. Either stencils, or a decalcomania, conforming to paragraph 6-5 may be used to apply the marking.

c. The lettering of battery location will be 7/8 inch plus or minus 1/8 inch in height. The marking will be black shade No. 37038, on aircraft green and gloss black, on aluminized or international orange and white painted surfaces.

7-39. AMERICAN FLAG DECALS.

a. The American flag will be applied to Army aircraft which support relief operations outside continental limits of the United States, unless specifically prohibited by the Unit Commander.

b. Decals should be placed in a horizontal position on each aircraft. Minimum decal size for CH-47 and larger aircraft should be 34 inches X 17-1/2 inches, and for UH-60 and smaller aircraft, 17-3/4 inches X 9-3/4 inches.

c. The American flag decal is to be positioned on vertical stabilizer of fixed wing aircraft, on CH-47, and the cargo door of Utility Rotary Wing Aircraft. Decals will be placed on major sheet metal structure of medical service aircraft and other rotary wing aircraft.

d. The American flag, when located on aircraft, should be positioned horizontally in such a manner that union (blue field) should be upper-most with stripes of the flag trailing at all times.

e. Flags printed on pressure-sensitive tapes are to be procured locally.

7-40. DESCRIPTION OF EXTERIOR PAINT SYSTEM.

a. Use this paragraph if no specific guidance for a particular aircraft is shown in Chapters 9 and 10.

b. Show painter's name or code, date, wash Primer (WP), primer (P), and top coat (L for lacquer, C for coatings, etc.) and quantity of coats. Painter can be Government, for example, "NCAD", or Commercial.

c. Example:

** WPI-P2-L3 Date

WP — indicates wash primer used

P — indicates primer used

L — indicates lacquer used (if req'd)

C — indicates coating used (if req'd)

d. Location. On left side of aircraft below the Serial Number and Fuel Specification. Also enter the above information in the applicable DA form 2408-15.

Section XI. MARKING OF INSTRUMENTS

7-41. GENERAL.

a. This Section provides the general method of marking aircraft instruments, the interpretation of these markings, and specific instructions for the application of the markings.

NOTE

This Section is the subject of International Standardization Agreement STANAG No. 3436.

b. ACTUAL MARKINGS AND FUEL GRADE FOR SPECIFIC AIRCRAFT.

The actual markings for specific aircraft and the fuel grade to which any set of markings apply may be determined by reference to the instrument markings presented in the -10 Operator's Manual for the aircraft involved.

c. INTERPRETATION OF THE RANGE MARKINGS.

The instrument range markings are designed to indicate to the pilot, at a glance, that flight operation is being accomplished in a safe, desirable, or unsafe region. Generally speaking the instrument marking system consists of four colors and intermediate blank spaces as illustrated in the fictitious instrument in figure 7-3.

d. INDEX MARK.

The index mark is used to indicate any movement between the glass and the case and thus reveal any errors in the location of the markers by such movement.

e. Deleted.

f. MIXTURE CONTROL QUADRANT MARKINGS.

These markings are used to identify the automatic lean and automatic rich positions on the control quadrant.

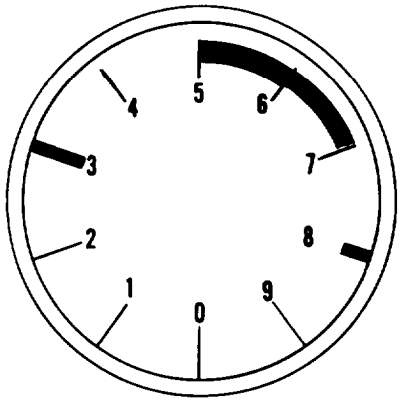

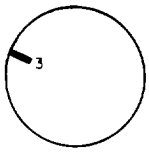

(Danger) Red radial at 3.– A dangerous condition exists if the pointer is ever below this marking during flight.

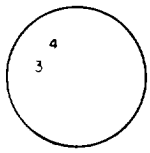

(Caution) Yellow arc from 3 to 4.– Indicates that danger may exist under certain conditions.

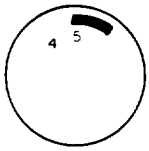

(Undesirable) Blank space from 4 to 5.– Indicates region that should be avoided or region in which operation is limited.

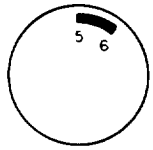

(Auto-lean) Blue arc from 5 to 6.– Indicates auto-lean operation is permitted.

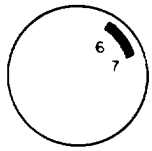

(Desirable or auto-rich) Green arc from 6 to 7.– Indicates region for continuous operation. When used in conjunction with blue markings, green takes on a special meaning requiring auto-rich operation when the pointer is in this region.

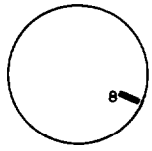

(Danger) Red radial at 8.– Operation above this value is prohibited.

Figure 7-3.Sample Markings

7-42. METHOD OF MARKING.

a. Normally the markings will be placed directly over the instrument graduations as in the sample instruments. However, if in this position the markings should interfere with instrument readings from the normal crew position, it is permissible to move the marker above or below the graduations as required. Care must be taken to assure that the markings cover the correct range when they are moved towards the center. It will be noted that the length of the marking required to cover given instrument range becomes smaller as it is moved closer to the center of the dial. (See figure 7-4, detail A.) To avoid possible error, it is suggested that lines be drawn from the extremities of the graduations to be encompassed, to the center of the dial. The marking can then be placed anywhere within these two lines. Every effort should be made, however, to keep the markings as far from the center of the dial as possible.

b. Instruments with multirotation pointers will have the number of times that the pointer crosses zero indicated by short dashes at right angles to the marking, as illustrated in figure 7-4, Detail B. It will be noted that the green arc extends from 1700 to 2300 and that the red radial is at 2500.

7-43. APPLICATION OF MARKINGS.

a. RANGE MARKINGS. The instrument range marking will be made using tape, Federal Specification A-A-113, the altermate method range marking may be made using lacquer, Federal Specification TT-L-32, in the color desired. For night vision use tape, reflective Federal Specification L-S-300, in the color desired. (Reference Table 8-3).

(1) Clean the surface of the gage to be marked, making sure all dirt, oil and grease have been removed.

(2) Cut the tape to desired ARC length and color desired, approximately 1/16 of an inch thick.

(3) Apply the tape making sure all bubbles and wrinkles have been removed.

(4) For lacquer marking clean surface as (a) above, making the range markings approximately 1/16 of an inch thick in the color and range desired.

NOTE

All operating ranges will be established using the applicable Aircraft Operators Manual.

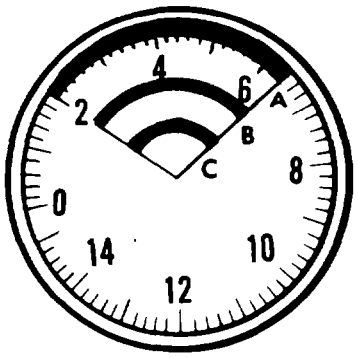

NOTE: Marking should be at A or B—not C.

DETAIL A

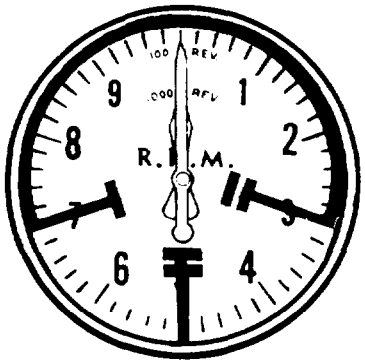

DETAIL B

Figure 7-4. Method of Marking

NOTE

Where conditions permit on 1 inch ond 2 inch clamp mounted indicators, which have the numerals and graduations on the outer circumference of the dial the fluorescent range marks will be installed on the front edge of the case just outside the cover glass. In those instances where the foregoing does not apply refer to the instrument markings presented in the -10 Operator's Manual.

(5) After allowing the applied marker to air dry for 30 minutes, trim to exact size and paint over the marker with another coat of varnish.

NOTE

If it is desired to remove any excess varnish, this may be done within 1/2 hour after application with a cloth dampened with naphtha.

b. INDEX MARK. A white index mark not over 1/16-inch wide will be painted across the joint between the glass and the case at the bottom of the center (6 o' clock) position, or in the uncalibrated area of all instruments having range markings on the glass. On panel installed clamp mount type instruments, the mark will be extended across the edge of the instrument case onto the mounting panel. On clamp mount type instruments, not panel installed, the mark will be extended across the rim of the case, onto the case. On instruments utilizing the entire circumference of the dial for calibration increments the location of the index mark will be left to the discretion of the using activity.

c. MIXTURE CONTROL QUADRANT MARKINGS. Mark the automatic lean position with gloss cellulose nitrate lacquer, light blue, Federal Specification TT-L-32. Mark the automatic rich position with gloss cellulose nitrate lacquer, light green, Federal Specification TT-L-32. (See figure 7-5).

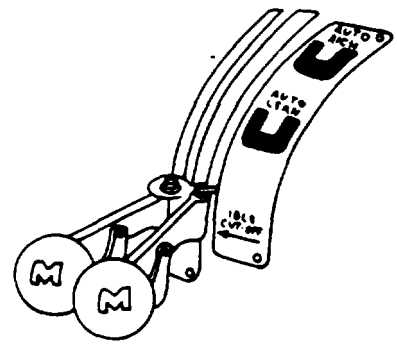

Figure 7-5. Mixture Control Quadrant

NOTE

The following paragraphs describing the markings for the various types of instruments attempt to cover all possible markings for each instrument. It should be noted that the illustrated instruments are typical and may or may not include all the markings mentioned in the descriptive paragraphs.

NOTE

It is not intended in this technical manual to set forth the exact ranges to be covered by these instrument markings for all aircraft but to illustrate the correct method of marking the various types of instruments. For example, the manifold pressure gage (figure 7-6 detail A) shows a takeoff value of 49 inches; for one aircraft it might be 55 inches; for another it might be 72 inches; for another, 100 inches, and the like. The exact ranges to be covered on each instrument for a given aircraft can by determined only through reference to the instrument marking page of the appropriate -10 Operator's Manual.

7-44. MARKINGS FOR RECIPROCATING ENGINE AIRCRAFT

a. MANIFOLD PRESSURE GAGE. (See figure 7-6, detail A.)

(1) BLUE ARC. Indicates the range within which operation is permitted in auto-lean. The bottom of this arc indicates the minimum manifold pressure desirable in flight determined by engine characteristics. The top of this arc indicates the manifold pressure at which mixture control must be moved into auto-rich.

(2) GREEN RADIAL OR ARC. Describes the range within which operation must be in auto-rich. The radial or top of this arc indicates maximum continuous power. All operation above this manifold pressure is limited in time (usually 5 or 15 minutes).

(3) SHORT RED RADIAL.. Indicates manifold pressure for takeoff.

(4) LONG RED RADIAL. Indicates maximum dry war emergency manifold pressure.

(5) LONG RED RADIAL. Indicates maximum war emergency manifold pressure with water injection.

b. TACHOMETER. (See figure 7-6, detail B.)

(1) BLUE ARC. Indicates rpm range within which auto-lean, operation is permitted. The bottom of this arc indicates the minimum rpm desirable in flight because of engine limitations, generator cut-out, etc. The top of this arc indicates the rpm at which the mixture control must be moved to auto-rich.

(2) GREEN RADIAL OR ARC. Indicates rpm range within which auto-rich operation is required. The radial or top of this arc indicates maximum continuous power. All operation above this rpm is limited in time (usually 5 or 15 minutes).

(3) RED RADIAL. Indicates maximum rpm.

(4) RED ARC. May be used to show region of prohibited operation because of dangerous vibration or similar reasons.

c. CYLINDER HEAD TEMPERATURE GAGE. (See figure 7-6, detail C.)

(1) BLUE ARC. Indicates the range within which operation is permitted in auto-lean. The bottom of this arc indicates the minimum temperature desirable for flight (minimum engine warmth required for good fuel vaporization and efficient engine operation). The top of this arc indicates the temperature at which the mixture control must be moved to auto-rich.

(2) GREEN ARC. Describes the range within which operation must be in auto-rich. The top of this arc indicates maximum continuous power; all operation above this temperature is limited in time (usually 5 or 15 minutes).

(3) RED RADIAL. Indicates maximum permissible temperature.

d. CARBURETOR AIR TEMPERATURE GAGE. (See figure 7-6, detail D.)

(1) YELLOW ARC. Indicates the temperature range within which undesirable conditions may exist such as danger of icing or poor fuel vaporization.

(2) GREEN ARC. Indicates the temperature range o! best operation and assures good vaporization.

(3) RED RADIAL. Indicates maximum permissible temperature, usually because of detonation danger.

e. COOLANT TEMPERATURE GAGE. (See figure 7-7, detail A.)

(1) GREEN ARC. Describes the range within which the temperature must remain during continuous operation. The bottom of this arc indicates minimum desirable temperature for flight. The top of this arc indicates maximum continuous power. All operation above this temperature is limited in time (usually 5 or 15 minutes).

(2) RED RADIAL. Indicates maximum permissible temperature.

(3) RED RADIAL. Indicates war emergency maximum temperature.

f. TORQUEMETER. (See figure 7-7, detail B.)

(1) BLUE ARC. Indicates the range within which operation is permitted in auto-lean. The bottom of this arc indicates the minimum torque pressure desirable in flight determined by engine characteristics. The top of this arc indicates the torque pressure at which mixture control must be moved into auto-rich.

(2) GREEN RADIAL OR ARC. Describes the range within which operation must be in auto-rich. The radial or top of this arc indicates maximum continuous power. All operation above this torque pressure is limited in time (usually 5 or 15 minutes).

(3) SHORT RED RADIAL. Indicates maximum dry torque pressure.

(4) LONG RED RADIAL. Indicates maximum wet torque pressure.

DETAIL A

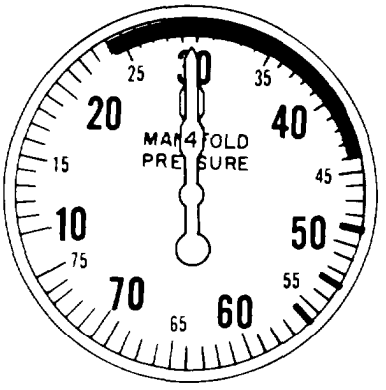

MANIFOLD PRESSURE GAGE

24 In.	Min Permissible in Flight
24 In.–35 In.	Auto-lean Permitted
35 In.–44 In.	Auto-rich Required
44 In.	Max Continuous (Operation above this Pressure Limited to 5 Min)
49 In.	Takeoff
53 In.	War Emergency-Dry
56 In.	War Emergency-Wet

DETAIL B

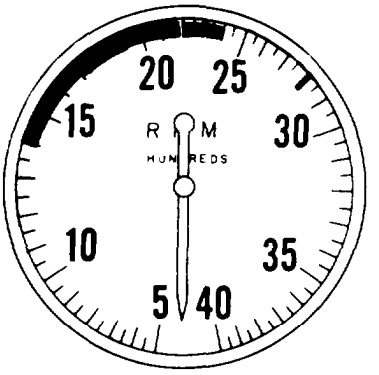

TACHOMETER

1400–1700 rpm	Auto-lean Permitted
1700–1900 rpm	Dangerous Vibration
1900–2200 rpm	Auto-lean Permitted
2200–2400 rpm	Auto-rich Required
2400 rpm	Max Continuous (Operation above this rpm limited to 5 min.)
2800 rpm	Max

DETAIL C

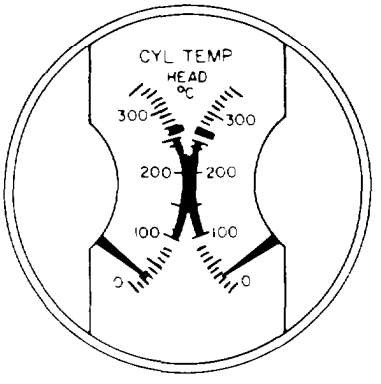

CYLINDER HEAD TEMPERATURE GAGE

100–232 C	Auto-lean Permitted
232–248 C	Auto-rich Required
248 C	Max Continuous (Operation above this temperature limited to 5 min.)
260 C	Max

DETAIL D

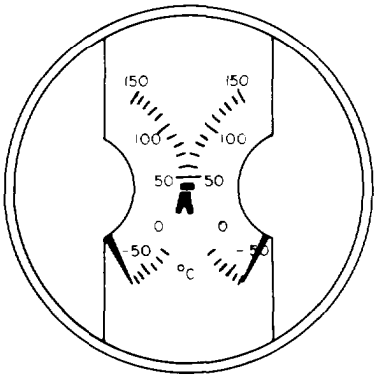

CARBURETOR AIR TEMPERATURE GAGE

–10 to +15 C	Danger of Icing
15 to 40	Continuous Operation
40 C	Max–Danger of Detonation

Figure 7-6. Typical Manifold Pressure Gage, Tachometer, Cylinder Head Temperature Gage, and Air Temperature Gage Markings.

DETAIL A

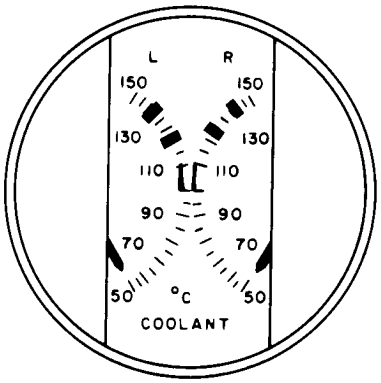

COOLANT TEMPERATURE GAGE

	100°–110 C	Continous Operation
■	125 C	Max
■	135 C	Max-War Emergency

DETAIL B

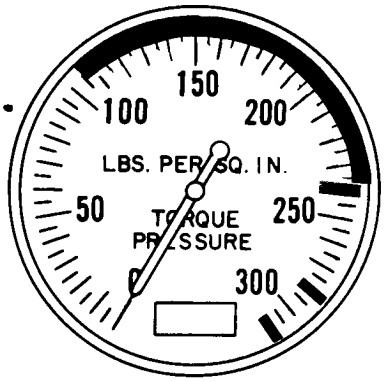

TORQUEMETER

■	120 psi	Min for Flight
■	120–240 psi	Auto-lean Permitted
■ ■	240 psi	Max Continuous–A.L. or A.R. (Operation above this pressure limited to 5 min in A.R.)
■	280 psi	Max-Dry
■	300 psi	Max-Wet

Figure 7-7. Typical Coolant Temperature Gage and Torquemeter Markings

7-45. MARKINGS FOR JET ENGINE AIRCRAFT

a. TACHOMETER. (See figure 7-8, detail A.)

(1) GREEN ARC. Describes the range within which the rpm must fall during continuous flight operation. The bottom of this arc describes the minimum rpm for best cruising. Considerable range will be lost when operating below this rpm. The top of this arc indicates maximum continuous rpm; operation above which is limited to a specified length of time.

(2) RED RADIAL. Indicates maximum rpm.

(3) RED ARC. May be used to show region of prohibited operation because of dangerous vibration or similar reasons.

b. EXHAUST TEMPERATURE GAGE. (See figure 7-8, detail B.)

(1) RED RADIAL. Indicates minimum permissible temperature during flight.

(2) GREEN ARC. Indicates desirable temperature during continuous operation.

(3) RED RADIAL. Indicates maximum permissible temperature for flight.

(4) RED RADIAL. Indicates maximum permissible temperature during starting or acceleration.

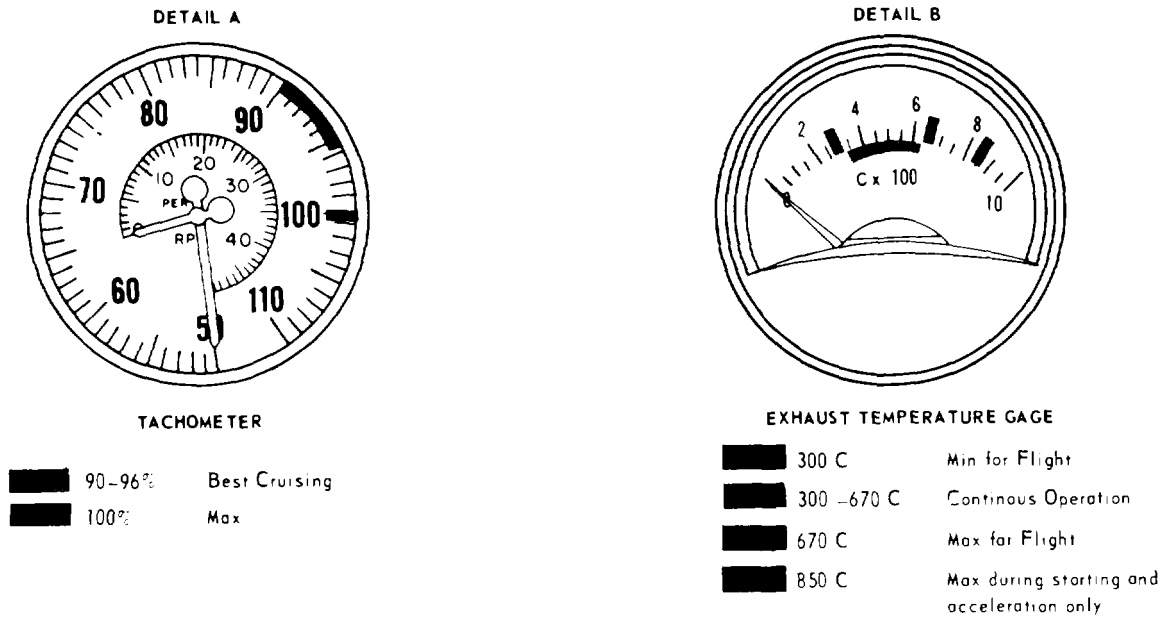

Figure 7-8. Typical Tachometer and Engine Exhaust Temperature Gage Markings

7-46. MARKINGS FOR HELICOPTERS

a. DUEL TACHOMETER. (See figure 7-9.)

(1) ROTOR.

(2) GREEN ARC. Indicates rotor rpm range during powered flight. The bottom of this arc describes minimum rotor rpm for continuous flight. The top of this arc indicates maximum rotor rpm with power.

(3) RED RADIAL. Indicates maximum permissible autorotative rpm.

(4) RED ARC OR RADIAL. May be used to show regions of prohibited operation because of dangerous vibration or similar reasons.

(5) ENGINE.

(6) RED RADIAL. Indicates maximum rpm.

b. NON CALIBRATED ROTOR SCALE. To locate a particular rotor speed on a universal type dual tachometer on which the rotor scale is not calibrated, use the following procedure.

(1) Find the speed on the engine scale corresponding to the desired rotor speed point by multiplying the desired rotor speed by the engine rotor gear ratio of the particular aircraft.

(2) Draw a line from the engine speed point on the engine scale, as determined above, to the center of the dial. The point where this line crosses the rotor scale is the desired rpm point on that scale.

(3) The above procedure can be used to locate any point on the rotor scale. The reverse of this procedure can be used to determine the rpm value of any point marked on the rotor scale.

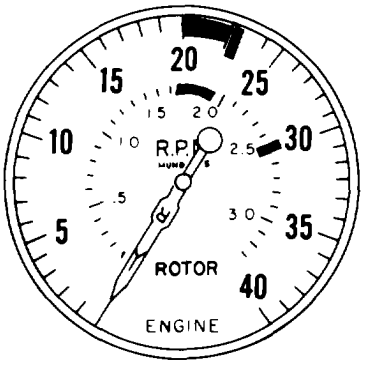

DUAL TACHOMETER

ROTOR

170 rpm	Min for Flight
170–195 rpm	Continuous Power Operation
245 rpm	Max Autorotation

ENGINE

2100 rpm	Min for Flight
2100–2300 rpm	Continuous Operation
2300 rpm	Max

Figure 7-9. Typical Dual Tachometer Markings

7-47. MARKINGS FOR ALL AIRCRAFT

a. OIL PRESSURE GAGE. (See figure 7-10, detail A.)

(1) LOWER RED RADIAL. Indicate. minimum oil pressure permissible in flight.

(2) GREEN ARC. Indicates desirable oil pressure range during continuous operation.

(3) UPPER RED RADIAL. Indicates maximum permissible oil pressure.

b. OIL TEMPERATURE GAGE. (See figure 7-10, detail B.)

(1) LOWER RED RADIAL. Indicates minimum permissible temperature during flight.

(2) GREEN ARC. Indicates desirable temperature during continuous operation.

(3) UPPER RED RADIAL. Indicates maximum permissible temperature.

c. AIRSPEED INDICATOR. (See figure 7-10, details C and D.)

(1) YELLOW RADIAL. Indicates maximum permissible airspeed with either full flaps or landing gear extended. When the maximum permissible speed with flaps down differs from that with gear down, the lower speed and condition will be given. A notation in parenthesis will also be included to show the higher limiting speed and condition.

(2) RED RADIAL. Indicates maximum permissible diving speed at design gross weight.

(3) YELLOW ARC. Defines the range of maximum permissible diving speeds from maximum to design gross weight.

d. ACCELEROMETER. (See figure 7-11, detail A.)

(1) RED RADIAL. Indicates maximum permissible positive acceleration at maximum gross weight.

(2) RED RADIAL. Indicates maximum permissible positive acceleration at design gross weight.

(3) RED RADIAL. Indicates maximum permissible negative acceleration at maximum gross weight.

e. HYDRAULIC PRESSURE GAGE. (See figure 7-11, detail B.)

(1) YELLOW RADIAL. Indicates pressure required for one brake application.

(2) GREEN ARC. Indicates normal operating pressure. The lower end of this arc indicates hydraulic pump cut-in pressure and the upper end indicates cut-out pressure.

(3) RED RADIAL. Indicates maximum permissible pressure.

f. SUCTION GAGE. (See figure 7-11, detail C.)

(1) RED RADIAL. Indicates minimum desirable suction.

(2) GREEN ARC. Indicates desirable suction range.

(3) RED RADIAL. Indicates maximum desirable suction.

g. DEICER GAGE. (See figure 7-11, detail D.)

(1) GREEN ARC. Indicates desirable pressure range.

(2) RED RADIAL. Indicates maximum permissible pressure.

h. FUEL PRESSURE GAGE. (See figure 7-11, detail E.)

Same as oil pressure gage. (Refer to subparagraph a).

DETAIL A

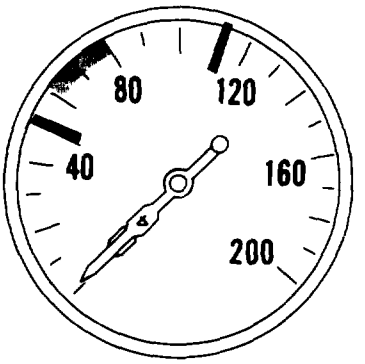

OIL PRESSURE GAGE

50 psi	Min for Flight
60–85 psi	Continuous Operation
110 psi	Max

DETAIL B

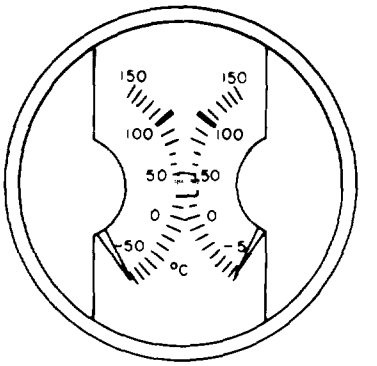

OIL TEMPERATURE GAGE

40 C	Min for Flight
60–75 C	Continuous Operation
100 C	Max

DETAIL C

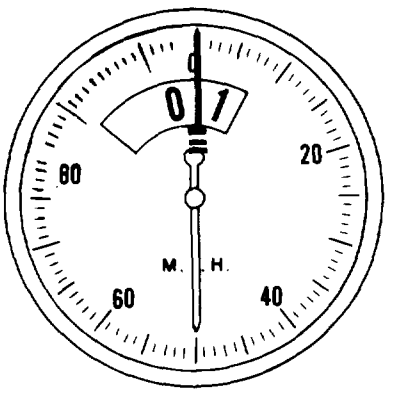

AIRSPEED INDICATOR

180 mph	Full Flaps or Landing Gear
290–300 mph	Max Diving (31000–26000 lb)
300 mph	Maximum Diving

NOTE

Should the landing gear and flap limits differ, no change will be made to the instrument marking but the caption in the -10 Operator's Manual will be written as follows:
180 mph Max–Full Flaps (Landing Gear–190 mph)

DETAIL D

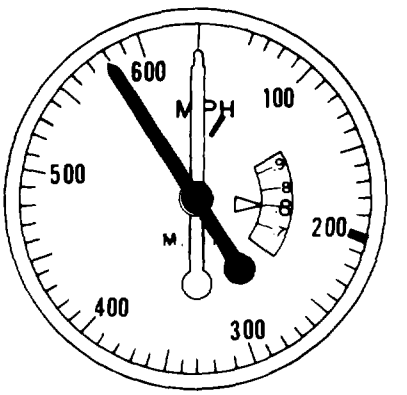

AIRSPEED INDICATOR

200 mph Full Flaps or Landing Gear

The instrument setting is such that the red pointer will move to indicate the limiting structural airspeed of 580 mph or the airspeed representing the limiting Mach. No. of .8, whichever is less.

Figure 7-10. Typical Oil Pressure Gage, Oil Temperature Gage, and Airspeed Indicator Markings

DETAIL A

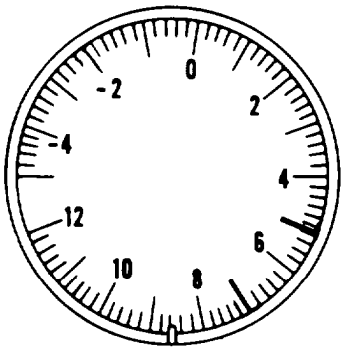

ACCELEROMETER

	5 G	Max at Max Gross Weight (with drop tanks)
	7 G	Max at design Gross Weight
	-2 G	Max at Max Gross Weight (with drop tanks)

DETAIL B

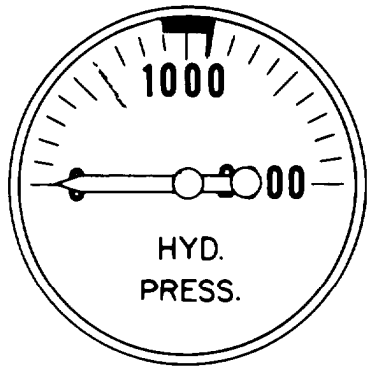

HYDRAULIC PRESSURE GAGE

	500 psi	One Brake Applicat Remaining
	900–1150 psi	Normal
	1150 psi	Max

DETAIL C

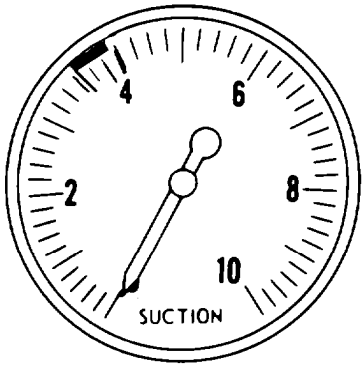

SUCTION GAGE

	3.75 In. Hg	Min
	3.75–4.25 In. Hg	Normal
	4.25 In. Hg	Max

DETAIL D

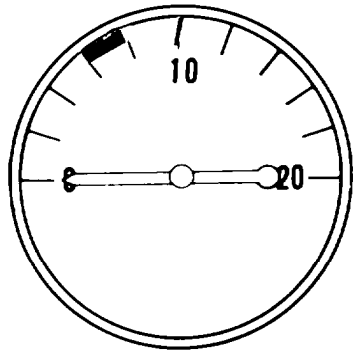

DEICER GAGE

	6–8 psi	Normal
	10 psi	Max

DETAIL E

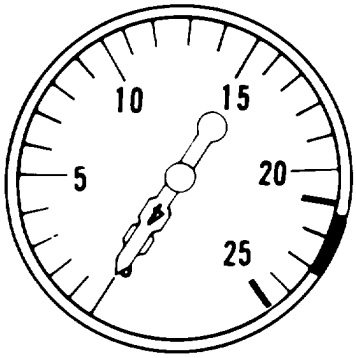

FUEL PRESSURE GAGE

	21 psi	Min for Flight
	21–23 psi	Normal
	25 psi	Max

Figure 7-11. Typical Accelerometer, Hydraulic Pressure Gage, Deicer Gage, and Fuel Pressure Goge Markings.

Page 7-28 has been deleted.

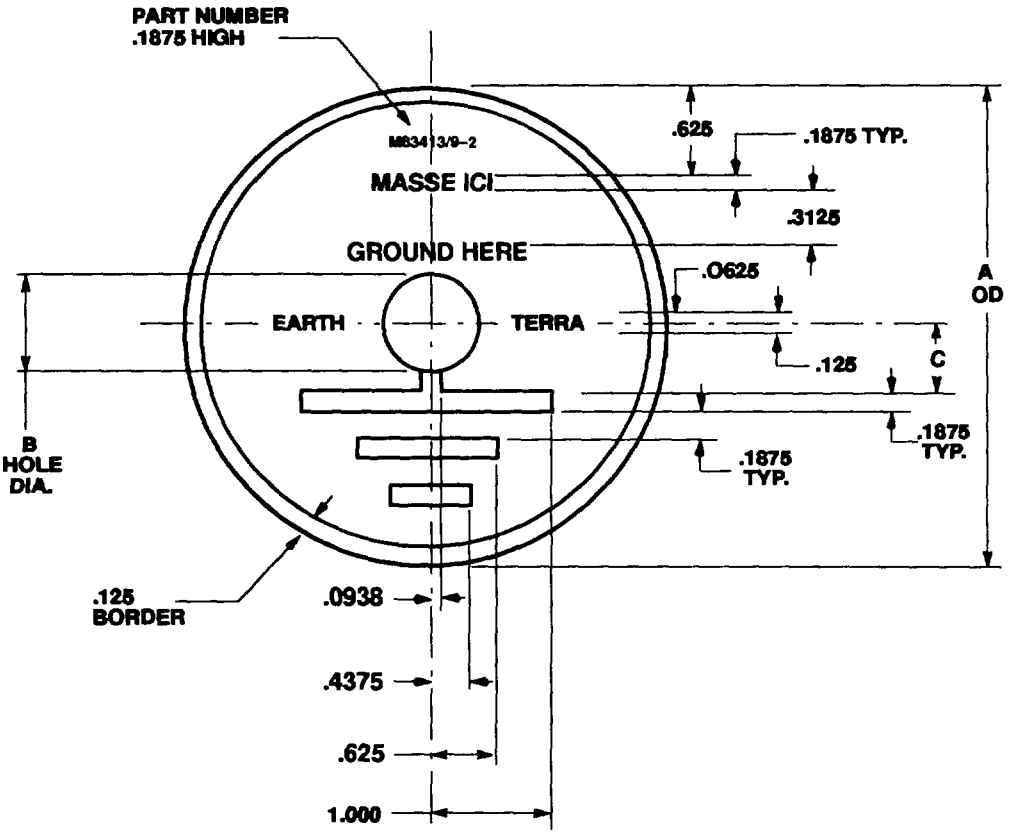

SYMMETRICAL ABOUT CENTER LINE

NOTES:
1. DIMENSIONS ARE IN INCHES.
2. UNLESS OTHERWISE SPECIFIED, TOLERENCE IS ± .031.

DASH NUMBER	A O.D.	B HOLE DIA.	C
-2	4.000 ± .125	1.200 ± .125	.750 ± .125

Figure 7-12. Fuel Nozzle Ground Dimensions.

CHAPTER 8
MISCELLANEOUS TABLES AND ILLUSTRATIONS

Table 8-1. Technical Manuals, Technical Bulletins, and AR's

TM 5-618	Painting, Repairs and Utilities
TB 55-9150-200-24	Engine and Transmission Oil, Fuels, and Additives for Army Aircraft
TM 1-1500-344-23 Series	Aircraft Weapons Systems Cleaning and Corrosion Control
AR 200-1	Environmental Protection and Enhancement
TB 43-0101	Handling, Storage and Disposal of Army Aircraft components containing Radioactive Materials
TB 43-0242	WD Carc Spot Painting
TB MED 501	Occupational and Environmental Health: Hearing conservation
TB MED 502	Occupational and Environmental Health: Respiratory Protection Program
TM 1-1500-204-23 (Series)	General Aircraft Maintenance Manual

Table 8-2. Standards-American Society for Testing and Materials (ASTM) D1193-Reagent Water

Federal Standard 595	- Colors
Military Standard 795	- Colors

Table 8-3. Consumable Items List

	Nomenclature	Speci.cation	NSN	Quantity
1.	Acid, Chromic	O-C-303	6810-00-264-6517	5 lb can
2.	Alcohol, Ethyl	O-E-760	6810-00-201-0907	5 gal
3.	Barrier Material	MIL-B-131	8135-00-282-0565	200 yds
4.	Bicarbonate, Sodium	O-S-576	6810-00-264-6618	1 lb
5.	Brush, Long Handle, Non-Metallic	MIL-B-23958	7920-00-051-4384	Each
6.	Cloth, Abrasive, Aluminum Oxide, 180 grit	P-C-451	5350-00-192-5051	Sheet
7.	Cloth, Abrasive, Aluminum Oxide, 240 grit	P-C-451	5350-00-161-9715	Sheet
8.	Cloth, Abrasive, Aluminum Oxide, 320 grit	P-C-451	5350-00-246-0330	Sheet
9.	Cloth, Lint-Free	CCC-C-46	8305-00-753-2967	50 yds
10.	Coating, Compound, Metal Pretreatment	MIL-C-8514	8030-01-015-6104	1 gal kit
11.	Coating, Fluorescent Red-Orange Paint	MIL-P-21600	8010-00-082-2421	1 gal
12.	Coating Kit, Rain Erosion Resistant, CLA TY 11	MIL-C-83231	8010-00-459-1756	1 gal kit
13.	Coating, Polyurethane, Rain Erosion, Thermally Re.ective	MIL-C-83445	8010-01-132-2976	1 gal kit
14.	Coating, Polyurethane, Olive Drab, No. 34088	MIL-DTL-64159 or MIL-DTL-53039	8010-01-055-2319	1 gal kit
15.	Coating, Polyurethane, Olive Drab, No. 34088	MIL-DTL-64159 or MIL-DTL-53039	8010-01-144-9875	5 gal kit
16.	Coating, Polyurethane, Aircraft Black, No. 37038	MIL-DTL-64159 or MIL-DTL-53039	8010-01-144-9879	5 gal kit
16.1	White Paint, General Purpose		8010-00-087-0107	1 qt
17.	Coating, Polyurethane, Aircraft Black, No. 37038	MIL-DTL-64159 or MIL-DTL-53039	8010-01-144-9885	1 qt
18.	Coating, Polyurethane, Aircraft Black, No. 37038	MIL-DTL-64159 or MIL-DTL-53039	8010-01-146-2646	1 gal
19.	Coating, Polyurethane, Aircraft Green, No. 34031	MIL-DTL-64159 or MIL-DTL-53039	8010-01-129-9348*	55 gal (Component A)

Table 8-3. Consumable Items List — Continued

	Nomenclature	Speci.cation	NSN	Quantity
20.	Coating, Polyurethane, Aircraft Green, No. 34031	MIL-DTL-64159 or MIL-DTL-53039	8010-01-131-6255	1 gal
21.	Coating, Polyurethane, Aircraft Green, No. 34031	MIL-DTL-64159 or MIL-DTL-53039	8010-01-131-6262	5 gal
22.	Coating, Polyurethane, Aircraft Green, No. 34031	MIL-DTL-64159 or MIL-DTL-53039	8010-01-141-2420	1 qt
23.	Coating, Polyurethane, Aircraft Gray, Exterior, No. 36300	MIL-DTL-64159 or MIL-DTL-53039	8010-01-127-8908	1 gal
24.	Coating, Polyurethane, Aircraft Gray, Exterior, No. 36300	MIL-DTL-64159 or MIL-DTL-53039	8010-01-144-9876	5 gal
25.	Coating, Polyurethane, Orange/Yellow, No. 33538	MIL-DTL-64159 or MIL-DTL-53039		
26.	Coating, Polyurethane, Aircraft Gray, Exterior, No. 36300	MIL-DTL-64159 or MIL-DTL-53039	8010-01-144-9882	1 qt
27.	Coating, Polyurethane, Aircraft Gray, Interior, No. 36231	MIL-DTL-64159 or MIL-DTL-53039	8010-01-146-2649	1 gal
28.	Coating, Polyurethane, Aircraft Red, No. 31136	MIL-DTL-64159 or MIL-DTL-53039	8010-01-144-9873	1 gal
29.	Coating, Polyurethane, Aircraft Red, No. 31136	MIL-DTL-64159 or MIL-DTL-53039	8010-01-144-9878	5 gal
30.	Coating, Polyurethane, Aircraft Red, No. 31136	MIL-DTL-64159 or MIL-DTL-53039	8010-01-144-9884	1 qt
31.	Coating, Polyurethane, Aircraft White, No. 37875	MIL-DTL-64159 or MIL-DTL-53039	8010-01-144-9872	1 gal
32.	Coating, Polyurethane, Aircraft White, No. 37875	MIL-DTL-64159 or MIL-DTL-53039	8010-01-144-9877	5 gal
33.	Coating, Polyurethane, Aircraft White, No. 37875	MIL-DTL-64159 or MIL-DTL-53039	8010-01-144-9883	1 qt

Table 8-3. Consumable Items List — Continued

	Nomenclature	Specification	NSN	Quantity
34.	Coating, Polyurethane, Component B (for all 55 gallon drum kits)	MIL-DTL-64159 or MIL-DTL-53039	8010-01-132-0205**	55 gal
35.	Coating, Polyurethane, Dark Sand	MIL-DTL-64159 or MIL-DTL-53039		1 gal
36.	Coating, Polyurethane, Insignia Blue, No. 35044	MIL-DTL-64159 or MIL-DTL-53039	8010-01-144-9880	5 gal
37.	Coating, Polyurethane, Insignia Blue, No. 35044	MIL-DTL-64159 or MIL-DTL-53039	8010-01-144-9887	1 qt
38.	Coating, Polyurethane Insignia Blue, 35044	MIL-DTL-64159 or MIL-DTL-53039	8010-01-146-2648	1 gal
39.	DELETED			
40.	Coating, Walkway, Type II	MIL-W-5044	5610-00-641-0427	1 gal
41.	Compound, Sealing	MIL-S-7124	8030-00-024-9634	1 pt
42.	Dichloromethane	MIL-D-6998	6810-00-244-0290	5 gal
43.	Dichromate, Potassium	O-P-559	6810-00-264-6525	5 lb
44.	Ethylene, Glycol, Monoethyl Ether Acetate	MIL-E-7125	6810-00-263-0563	1 Gal can
45.	Films, Chemical, Corrosion Resistant for Aluminum, Class 1A	MIL-C-5541	8030-00-811-3723	2 lb can
46.	Foil, Metal, 5052 Aluminum Alloy	QQ-A-1876	9535-00-541-2453	Roll
47.	Lacquer, Lusterless Black, Shade 37038	MIL-L-19538	8010-00-527-2884	1 gal
48.	Lacquer, Black	MIL-DTL-53059 or MIL-DTL-64159	8010-01-042-9438	1 gal
49.	Lacquer, Gray No. 36231	TT-L-20	8010-00-515-1568	1 gal can
50.	Lacquer, Cellulose Nitrate Aluminum, Shade 17178	TT-L-32	8010-00-241-8406	1 gal
51.	Lacquer, Gray Shade 36231	TT-L-20	8010-00-515-1568	1 gal
52.	Lacquer, Lusterless Aircraft Green	MIL-DTL-53059 or MIL-DTL-64159	8010-00-083-6588	5 gal can
53.	Lacquer, Lusterless Aircraft Green	MIL-DTL-53059 or MIL-DTL-64159	8010-01-033-8917	1 gal
53.1	Lacquer, Acrylic, Blue Shade 15044	MIL-PRF-81352C	8010-00-551-7933	1 Gal
53.2	Lacquer, Acrylic, Green Shade 14187	MIL-PRF-81352C	8010-00-527-2483	1 Gal
53.3	Lacquer, Acrylic, Red Shade 11136	MIL-PRF-81352C	8010-00-551-7934	1 Qt

Table 8-3. Consumable Items List — Continued

	Nomenclature	Specification	NSN	Quantity
53.4	Lacquer, Acrylic, Yellow Shade 13538	MIL-PRF-81352C	8010-00-527-2496	1 Qt
54.	Mat, Abrasive Nylon	MIL-A-9962	5350-00-967-5089	Sheet
55.	Methyl Ethyl Ketone	TT-M-261	6810-00-281-2785	1 gal
56.	Paint, Epoxy, Gray, No. 36231	MIL-C-22750	8010-01-082-3060	1 qt
57.	Paper, Abrasive, No. 400	P-P-101	5350-00-224-7201	Sheet
58.	Paper, Abrasive, 280 Grit	P-P-105	5350-00-264-3489	Sheet
59.	Primer, Lead and Chromatic Free	MIL-P-85582	8010-01-218-0857	1 gal kit
60.	Paper, Barrier, Grade A, Type I, Class 2	MIL-B-121	8135-00-753-4661	Roll
61.	Deleted.			
62.	Primer, Red	MIL-P-52192	8010-00-082-1714	5 qt kit
63.	Primer, Wash	DOD-P-15328	8030-00-281-2726	1 gal kit
64.	Corrosion Preventive Compound, Petrolatum Hot Application, Grade 1	MIL-C-11796	8030-00-285-1570	35 lb pail
65.	Corrosion Preventive Compound, Solvent Cutback Cold Application, Grade 1	MIL-C-16173	8030-00-231-2345	1 gal
66.	Remover, Paint	MIL-R-25134	8010-00-815-2970	1 gal
67.	Remover, Paint, Type I	MIL-R-81294	8010-00-181-7568	1 gal
68.	Sealant, Class B	MIL-S-8784	8030-00-152-0021	8 oz
69.	Sealant, Safety Walk, Pressure Sensitive Material, Type III	MIL-D-17951	8030-00-264-3886	5 oz
70.	Deleted			
71.	Deleted			
72.	Sealing Compound Class B	MIL-S-7124	8030-00-024-9634	1 pt
73.	Sheet, Plastic, Laminated Type ADP, .062 Thick	L-P-387A	9330-00-282-5640	Sheet
74.	Deleted			
75.	Solvent, Ethyl Acetate	TT-E-751	6810-00-245-6694	5 gal
76.	Tape, Insulation	MIL-I-15126	5970-00-137-9501	Roll
77.	Tape, Masking	PPP-T-42	7510-00-266-6712	60 yd roll
78.	Tape, Pressure Sensitive	MIL-T-21595	7510-00-680-2395	2" wide roll
79.	Tape, Pressure Sensitive Adhesive	PPP-T-60	7510-00-281-2700	3" wide roll

Table 8-3. Consumable Items List — Continued

	Nomenclature	Specification	NSN	Quantity
80.	Tape, Pressure Sensitive Adhesive, Type II	MIL-T-23397	7510-00-473-9513	2" wide roll
80.1	Tape, Pressure Sensitive, Blue	A-A-113	7510-00-550-7124	1/2 X 2592 in roll
80.2	Tape, Pressure Sensitive, Green	A-A-113	7510-00-550-7129	1/2 X 2592 in roll
80.3	Tape, Pressure Sensitive, Red	A-A-113	7510-00-550-7126	1/2 X 2592 in roll
80.4	Tape, Pressure Sensitive, Yellow	A-A-113	7510-00-550-7125	1/2 X 2592 in roll
80.5	Tape, Pressure	A-A113	7510-00-550-7127	
80.6	Tape, Reflective, Yellow	L-S-300	9390-00-057-4545	50 yd roll
80.7	Tape, Reflective, Green	L-S-300	9390-00-106-2466	50 yd roll
80.8	Tape, Reflective, Red	L-S-300	9390-00-106-2467	50 yd roll
81.	Thinner	MIL-T-6096	8010-00-165-5582	1 gal
82.	Thinner, Aliphatic Polyurethane Coating	MIL-T-81772	8010-00-181-8080	1 gal
83.	Thinner, Lacquer	TT-T-266	8010-00-160-5787	1 gal
84.	Toluene	TT-T-548	6810-00-290-0048	5 gal
85.	Xylene	ASTM D 846	6810-00-584-4070	5 gal
86.	Deleted			
87.	Urethane, Gloss	MIL-C-83286	Local Purchase ***	
88.	Varnish, Acid-Proof	TT-V-51	8010-00-160-5856	5 gal
89.	Wax, Paraffin	VV-W-95	9160-00-285-2044	1 lb cake
90.	Wool, Aluminum	MIL-A-4864	5350-00-286-4851	1 lb
91.	Litmus, Paper AC (Blue)	MS 36253-2	6640-00-290-0146	100 ea
92.	Litmus, Paper AC (Red)	MS 36253-1	6640-00-290-0147	100 ea
93.	Paint Heat Resistant, Gray	MIL-P-14105	8010-00-877-6415	1 gal
94.	Lacquer, Aluminum, Heat Resisting, Shade 17178	TT-P-28	8010-00-815-2592	1 gal
95.	Paint, Heat Resisting Shade 34087	MIL-P-14105	8010-00-616-4009	1 gal
96.	Epoxy Primer Coating	MIL-P-53022	8010-01-193-0516	1 qt kit

Table 8-3. Consumable Items List — Continued

	Nomenclature	Specification	NSN	Quantity
97.	Coating Polyurethane aircraft green, No. 34031	MIL-DTL-64159 or MIL-DTL-53039 TY4	8010-01-316-2219	1 gal
98.	Coating Polyurethane aircraft black, No. 37038	MIL-DTL-64159 or MIL-DTL-53039 TY4	8010-01-340-5176	4 gal
99.	Coating Polyurethane aircraft yellow, No. 33538	MIL-DTL-64159 or MIL-DTL-53039 TY4	8010-01-247-8885	1 qt
100.	Coating Polyurethane aircraft tan, No. 33446	MIL-DTL-64159 or MIL-DTL-53039 TY4	8010-01-306-9680	1 gal
101.	Primer Coating, epoxy	MIL-P-53030	8010-01-193-0520	1 gal
102.	Acetone, Technical	ASTM-D329	6810-01-003-0262	1 gal
103.	Naphtha, Aliphatic	TT-N-95	6810-00-238-8119	1 gal

* 55 gallon drums Component A: If these NSNs are used, order four, and one 55-gallon drum of Component B will also be shipped. This is consistent with the mixing ratio required of 4 (Component A) to 1 (Component B).

** Component B.

*** Although Olive Drab is not listed in the Military Specification or Qualified Products List (QPL), it is available from the companies listed on the QPL.

Table 8-4. State Abbreviations

Alaska	AK	Montana	MT
Alabama	AL	Nebraska	NE
Arizona	AZ	Nevada	NV
Arkansas	AR	New Hampshire	NH
California	CA	New Jersey	NJ
Colorado	CO	New Mexico	NM
Connecticut	CT	New York	NY
Delaware	DE	North Carolina	NC
District of Columbia	DC	North Dakota	ND
Florida	FL	Ohio	OH
Georgia	GA	Oklahoma	OK
Guam	GU	Oregon	OR
Hawaii	HI	Pennsylvania	PA
Idaho	ID	Puerto Rico	PR
Illinois	IL	Rhode Island	RI
Indiana	IN	South Carolina	SC
Iowa	IA	South Dakota	SD
Kansas	KS	Tennessee	TN
Kentucky	KY	Texas	TX
Louisiana	LA	Utah	UT
Maine	ME	Vermont	VT
Maryland	MD	Virginia	VA
Massachusetts	MA	Virgin Islands	VI
Michigan	MI	Washington	WA
Minnesota	MN	West Virginia	WV
Mississippi	MS	Wisconsin	WI
Missouri	MO	Wyoming	WY

Table 8-5. Definitions of Common Painting Terms

Common Painting Terms	Definitions
Abrasion Resistance	The resistance of a surface to being worn by rubbing or friction.
Acrylic	A family of synthetic resins made by polymerizing esters of acrylic acids.
Aliphatic	The name applied to petroleum products which are straight-chain hydrocarbons derived from a paraffin-base crude oil.
Alkyd	Asynthetic resin which is the condensation product of a Polybasic acid such as phthalic, a polyhydric alcohol such as glycerin and an oil fatty acid.
Alligatoring	A form of paint failure in which cracks form on the surface layer only. It is caused by the application of thick films where the underlying surface remains relatively soft.
Binder	The nonvolatile portion of a coating vehicle which is the film-forming ingredient used to bind the pigment particles together.
Bleeding	A condition which exists when the color of a dye, stain or pigment passes through the top coat producing a stain. It occurs when the pigment is somewhat soluble in the vehicle of the top coat.
Blistering	A paint film failure usually caused by application of paint on a surface containing an excessive amount of moisture or other volatile material.
Blushing	A term applied to lacquers when they become partially opaque, cloudy or translucent upon application or drying. Fast-evaporating solvents may cool the film enough to cause water condensation, and resultant precipitation of solid materials.
Catalyst	A substance which accelerates the speed of a chemical reaction.
Chalking	The presence of a loose powder on the surface of a paint after exposure to the elements.
Checking	A phenomenon manifested by slight breaks in the surface of the paint film.
Coalescence	The fusing together of a latex film upon evaporation of water.
Cobwebbing	Same as webbing - see webbing.

Table 8-5. Definitions of Common Painting Terms — Continued

Common Painting Terms	Definitions
Color	A generic term referring inclusively to all colors of the spectrum, and white and black. Color is described by three properties: hue, lightness and saturation. (1) Hue (color, character, dominant wavelength), blue, green, red, etc. (2) Lightness (brightness, reflectance, value) position on the gray scale between pure black and pure white. (3) Saturation (purity, grayness, cleanliness, muddiness, chroma), purity or intensity of color.
Color Retention	Color stability after exposure to the elements.
Compatibility	The ability of two or more materials to mix with each other without separation or adverse reaction.
Corrosion	Detrimental change in a material usually a metal under condition of exposure.
Crawling	The tendency of a liquid to draw up because of high surface tension.
Crocking	Removal of color on abrasion or rubbing.
Defoamer	Products used for controlling undesirable foams.
Dew Point	The temperature at which the air becomes saturated with water vapor.
Diluent	A liquid which is blended with an active solvent to reduce cost.
Drier	Any catalytic material which when added to a drying oil accelerates drying or hardening of the film.
Dry Bulb Temperature	The temperature as indicated by an ordinary thermometer.
Efflorescence	A phenomenon whereby a whitish crust of fine crystals forms on a painted surface. These are usually sodium salts which diffuse through the paint film from the substrate.

Table 8-5. Definitions of Common Painting Terms — Continued

Common Painting Terms	Definitions
Elastomeric Compound	Any of a variety of elastic compounds resembling rubber. Rubber is an elastomeric compound.
Emulsifier	A material which when added to a mixture of dissimilar materials such as oil and water will produce a stable homogeneous emulsion.
Emulsion	A suspension of fine particles of globules of a liquid within a liquid.
False Body	A composition which thins down on stirring is said to exhibit false body.
Faying Surfaces	Surfaces fitted or joined closely or tightly.
Firepoint	The temperature at which a material takes fire without flame from an external source.
Flash Point	Lowest temperature at which a substance in an open vessel gives off enough vapors to produce a flash of fire when a flame is passed near the surface.
Hue	Color, character, dominant wavelength, blue, green, red, etc.
Hydrogen Embrittlement	Embrittlement of a metal caused by absorption of hydrogen.
Hydrophilic	Attracted by water or water loving.
Hydrophobic	Repelled by water or water hating.
Hygroscopic	Absorbs and retains moisture from atmosphere or other sources.
Immiscible	Not miscible. Any liquid which will not mix with another liquid, in which case it forms two separate layers or exhibits cloudiness or turbidity.
Incompatible	This term is applied to liquid and solid systems to indicate that one material cannot be mixed with another specified material without separation or impairment of properties.
Inert	The term applied to various extended pigments such as asbestine, barytes, silica calcium sulfate, mica, talc, etc. In general, they have poor hiding power but they are inert from a chemical and physical standpoint. While they contribute some desirable properties to a paint, they are primarily used to lower the cost.

Table 8-5. Definitions of Common Painting Terms — Continued

Common Painting Terms	Definitions
Inhibitor	Any substance which slows or prevents chemical reaction or corrosion.
Intensity	The intensity of a color is its purity or saturation. For example, an intense red is one which is a very strong, pure red color.
Lacquer	A term which usually indicates that the material dries by evaporation and forms a film from the nonvolatile constituents.
Lightness	(Brightness, reflectance, value) Position on the gray scale between pure black and pure white.
Lipophilic	Oil loving.
Livering	An increase in the consistency of a paint resulting in a rubbery or coagulated mass.
Luster	The gloss of a finish.
Mildew	Organic surfaces exposed to high temperature-humidity atmospheres are attacked by fungus growth. This is a dark discoloration. Usually a mold type of fungus but more commonly called “mildew”.
Mineral Spirits	A petroleum fraction with boiling range between 300° and 400°F.
Mottling	A film defect associated with spraying. Appears as circular imperfections.
Nitrocellulose	A substance produced by the treatment of cotton or wood fibers with nitric acid. Used in lacquers.
Opaque	Impervious to light or not translucent.
Orange Peel	A pebbled film surface similar to the skin of an orange in appearance. It is caused by too rapid drying before leveling takes place.
Organic	A compound containing carbon and hydrogen and in some cases other elements such as oxygen, nitrogen, sulfur, phosphorus, the halogens, etc.
Pastel	A tint. A color to which white has been added.

Table 8-5. Definitions of Common Painting Terms — Continued

Common Painting Terms	Definitions
PH Value	The numerical expression used to describe the hydrogen ion concentration. The PH value denotes the degree of acidity or alkalinity.
Phenolic Resins	A class of resins produced as the condensation product of phenol or substituted phenol and formaldehyde or derivatives.
Pigment	A finely divided, insoluble substance which imparts color to the material to which it is added.
Pigment Volume Concentration	The ratio of the total volume of pigment to the total volume of non-volatile matter in a paint.
Pinholing	The appearance of fine, pimply elevations or tiny holes on a coating.
Plasticizers	Materials which are added to resins to soften and improve flexibility.
Polymer	A large molecule formed when many molecules are linked together by polymerization.
Primary Colors	In theory, those colors from which all other colors and white may be made. The primary colors in visible light are red, green, and blue. The so-called pigment primaries, each absorbing a light primary, would then be blue green or cyan (minus red), majenta (minus green), and yellow (minus blue). Because of deficiencies in the available cyan and majenta colorants, confusion developed, so that red, yellow and blue are now often referred to as the pigment primaries.
Reducer	A volatile compound which is employed to bring coatings to the proper consistency. Also called thinner.
Reflective Index	A measure of the deviation from normal that a beam of light undergoes upon passing through a given substance.
Relative Humidity	A method for expressing the amount of moisture in the air. It is expressed in per cent of saturation and is an indication of the proportional amount of moisture that could be absorbed or held at that temperature.
Resin	An organic polymer in the form of a crystalline or amorphous solid, or viscous liquid, of either natural or synthetic origin.
Sagging	The tendency of a wet paint film to flow downward and become thicker on vertical surfaces.

Table 8-5. Definitions of Common Painting Terms — Continued

Common Painting Terms	Definitions
Saturation	Purity or intensity of color. Degree of freedom from grayness.
Seeds	Undesirable particles which develop in a liquid coating by partial gelation of the vehicle or by agglomeration of pigment particles.
Shade	The difference in appearance between colors of similar hue.
Sheen	A specular reflectance taken at a low angle, usually 85°.
Skinning	The formation of a solid surface layer on a liquid varnish or paint when exposed to air.
Solution	A homogeneous liquid mixture, the proportion of whose constituents may be varied within certain limits. A solid is said to be in solution when the molecules of the liquid have exceeded the attraction of those of the solid.
Solvent	The term applied to products which dissolve the film forming constituents.
Specific Gravity	The ratio of the weight of an equal volume of a substance to the weight of an equal volume of water at stated temperature.
Spreading Rate	The area of a surface over which a unit volume of paint will spread; usually expressed in square feet per gallon.
Strength	The strength of a pigment is its opacity or tinting power.
Substrate	The basis metal.
Tint	A color produced by mixing a colored material, dye or pigment with white pigment or paint.
Tinting Strength	The coloring power of a given quantity of pigment or paint.
Tone	A modification of a full-strength color (mass tone) secured by blending with other colors.
Toughness	The ability of a material to take bending, impact, etc. without cracking.
Vehicle	The liquid portion of any paint, enamel or lacquer.

Table 8-5. Definitions of Common Painting Terms — Continued

Common Painting Terms	Definitions
Viscometer	Any instrument that measures viscosity or the internal friction of fluidity of a liquid.
Viscosity	A property of fluids which can be described as the resistance to flow.
Webbing	A stringy paint deposit similar to that of a spider web.
Wrinkle Finish	A varnish or enamel film which exhibits a novelty effect similar to fine wrinkles.

Table 8-6. Ventilation and Respirator Requirements for Application of Paints

Facility	Air Flow (CFM/Sq Ft Open Face Area, FPM)*	Respirator
Walk-in room or deep booth		
(crossdraft up to 50 FPM)#	<75	Airline
(crossdraft up to 100 FPM)	<125	Airline
(crossdraft up to 50 FPM)	>75	Chemical Cartridge
(crossdraft up to 100 FPM)	>125	Chemical Cartridge
Spray cabinets (less than 4 sq ft. open face area)		
(crossdraft up to 100 FPM)	<150	Airline
	>150	Chemical Cartridge
Spray cabinet (more than 4 sq ft open face area)		
(crossdraft up to 100 FPM)	<125	Airline
	>125	Chemical Cartridge
Confined spaces (for example inside or underneath vehicles or other equipment)		Airline
Outdoor application		
Brush or roller application		Chemical Cartridge
Spray application		Airline
Indoor application	No mechanical ventilation	Airline

* Cubic feet per minute per square foot of open face area (CFM/sq ft) is equivalent to feet per minute (FPM). CFM is a volumetric flow rate; FPM is a linear flow rate. Values listed are the minimum allowed.
(< – less than, > – greater than)

\+ Respirator — Airline means NIOSE/MSEA-approved Type C positive pressure device with a full facepiece.
— Chemical cartridge means a NIOSE/MSEA-approved paint spray respirator with organic vapor cartridge(s), paint prefilter(s), full facepiece.
— Chemical cartridges and paint spray prefilters shall be changed with appropriate replacement elements based on the following:
— Daily
— When breakthrough (solvent odor) is detected by the wearer
— When breathing resistance is too great

\# Crossdrafts greater than 100 FPM should not be permitted.

Table 8-7. Current Safety Guidelines for Application of MIL-DTL-64159 or MIL-DTL-53039B Paint

Type Of Painting Facility	Maximum Crossdraft (Feet per Minute)	Application Safety Procedures Minimum Cross-Section Air Flow Velocity (Feet per Minute)[b] 25 50 75 100 125 150 175+
Walk-in Room or Deep Booth (e.g., Vehicular Booth)	50	Airline Respirator[c] / Chemical Cartridge Respirator
	100	Airline Respirator[c] / Chemical Cartridge Respirator
Spray Cabinet (Less Than 4 ft^2 Open Face Area)	100	Airline Respirator[c] / Chemical Cartridge Respirator
Spray Booth (More Than 4 ft^2 Open Face Area)	100	Airline Respirator[c] / Chemical Cartridge Respirator
Con.ned Spaces (e.g., Inside or Underneath Vehicle)	- - -	Airline Respirator[c]
Outdoor application	- - -	Chemical Cartridge Respirator[d]
Indoor Application (No Validation)	- - -	Airline Respirator[c]/Facility Dedication/No Unprotected Personnel[f]

[a] Worker protection also includes full skin cover clothing and gloves, exclusion of sensitized personnel and job-related medical surveillance.

[b] Feet per minute = $ft^3/min/ft^2$ of open face area perpendicular to air flow.

[c] Airline respirator = NIOSH/MSHA-approved Type C positive-pressure airline hose mask with full facepiece.

[d] Chemical cartridge respirator = NIOSH/MSHA-approved paint spray respirator with organic vapor cartridge(s), paint/mist prefilter(s), and full facepiece. Cartridges and prefilters are to be replaced when one of the following occurs:
—new workday begins
— chemical or solvent odor is detected inside mask by wearer
— breathing resistance becomes too great

[e] Unprotected personnel should remain outside a 50-ft radius until 30 minutes after painting is completed.

[f] Exclusion of unprotected personnel during painting and for 30 minutes after cessation of painting.

Table 8-8. Recommended Respiratory Protection Guidelines for Spray Finishing Operations

	Air Flow, CFM/Sq Ft Cross Section (FPM)*		
Facility	**Compressed Air Spray**	**Airless Spray**	**Electrostatic Coating**
Walk-in Room or Deep Booth (Example—Vehicular Booth)	75-100	60	—
Spray Cabinet (Less Than 4 sq. ft. Open Face Area)	150	100	100
Spray Booth (More Than 4 sq. ft. Open Face Area)	200	125	100
Confined Spaces (Example—Inside or Underneath Vehicle)	— Positive Pressure Air Line Respirator —		

*Approved Organic Vapor Cartridge/Paint Spray Respirator and Eye Protection is Normally Required

Table 8-9. Occupational Health Protection Requirements for Paint Spray Workers Using MIL-E-52798A Alkyd Enamel and MIL-DTL-64159 or MIL-DTL-53039B Polyurethane Coating

	Alkyd Enamel and Lacquer	Polyurethane Coating
Hazards	Pigments (May Include Pb and $Cr0_3$)	Pigments (May Include Pb and $Cr0_3$
	Driers	Isocyanates
	Solvent	Solvents
Recommended Protection	Ventilation Control	Ventilation Control
	Paint Spray Respirator* or Supplied Air-mask	Paint Spray Respirator** or Supplied-Air Mask
	Eye Protection*	Eye Protection
		Medical Evaluation
Basis for Recommendations	OSHA Standards	OSHA Standards
	NIOSH Recommended Standards	NIOSH Recommended Standards
	ACGIH Recommendations	ACGIH Recommendations
	ANSI Standards	ANSI Standards
	Industry Practice	Industry Practice

* Depending on Concentration of Overspray.

** Pending Outcome of Tests to Determine Suitability and Depending on Concentration of Overspray.

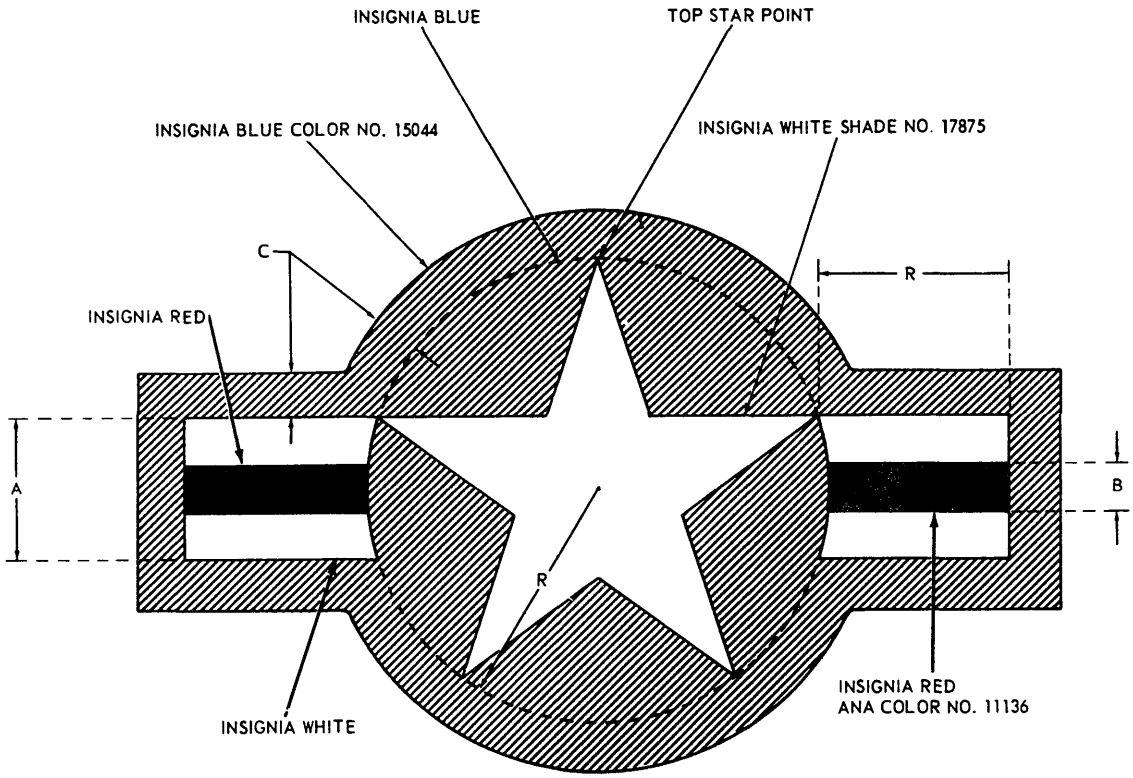

THE RADIUS (R) OF THE BASIC BLUE CIRCLE DETERMINES ALL DIMENSIONS.

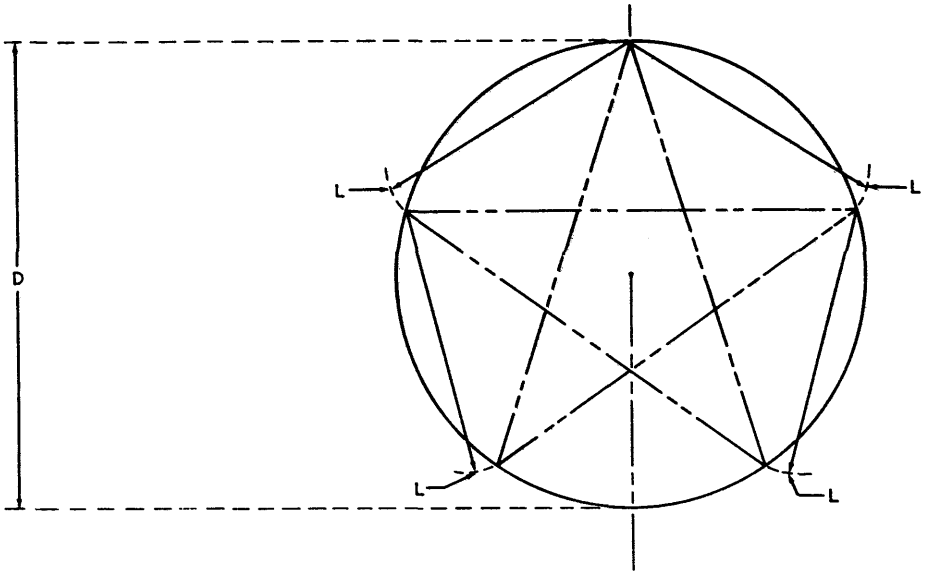

SUGGESTED CONSTRUCTION FOR TEMPLATES OR STENCILS

Figure 8-1. National Star Insignia (Sheet 1 of 2)

D	R	A	B	c	L
9.5	4.75	2.375	0.80	0.59	5.6
10.0	5.00	2.500	0.83	0.63	5.9
15.0	7.50	3.750	1.25	0.94	8.8
20.0	10.00	5.000	1.66	1.25	11.8
25.0	12.50	6.250	2.08	1.56	14.77
30.0	15.00	7.500	2.50	1.88	17.6
35.0	17.50	8.750	2.92	2.19	20.6
40.0	20.00	10.000	3.33	2.50	23.5
45.0	22.50	11.250	3.75	2.81	26.5
50.0	25.00	12.500	4.17	3.13	29.4
55.0	27.50	13.750	4.58	3.44	32.3
60.0	30.00	15.000	5.00	3.75	35.3

* Note: 1. **All** Dimensions in Inches.

2. D = DIAMETER OF BASIC BLUE CIRCLE
R = RADIUS OF BASIC BLUE CIRCLE 1/2D
A = 1/2 RADIUS
B = 1/6 RADIUS
C = 1/8 RADIUS
L = 1.176 RADIUS

Figure 8-1. National Star Insignia (sheet 2 of 2)

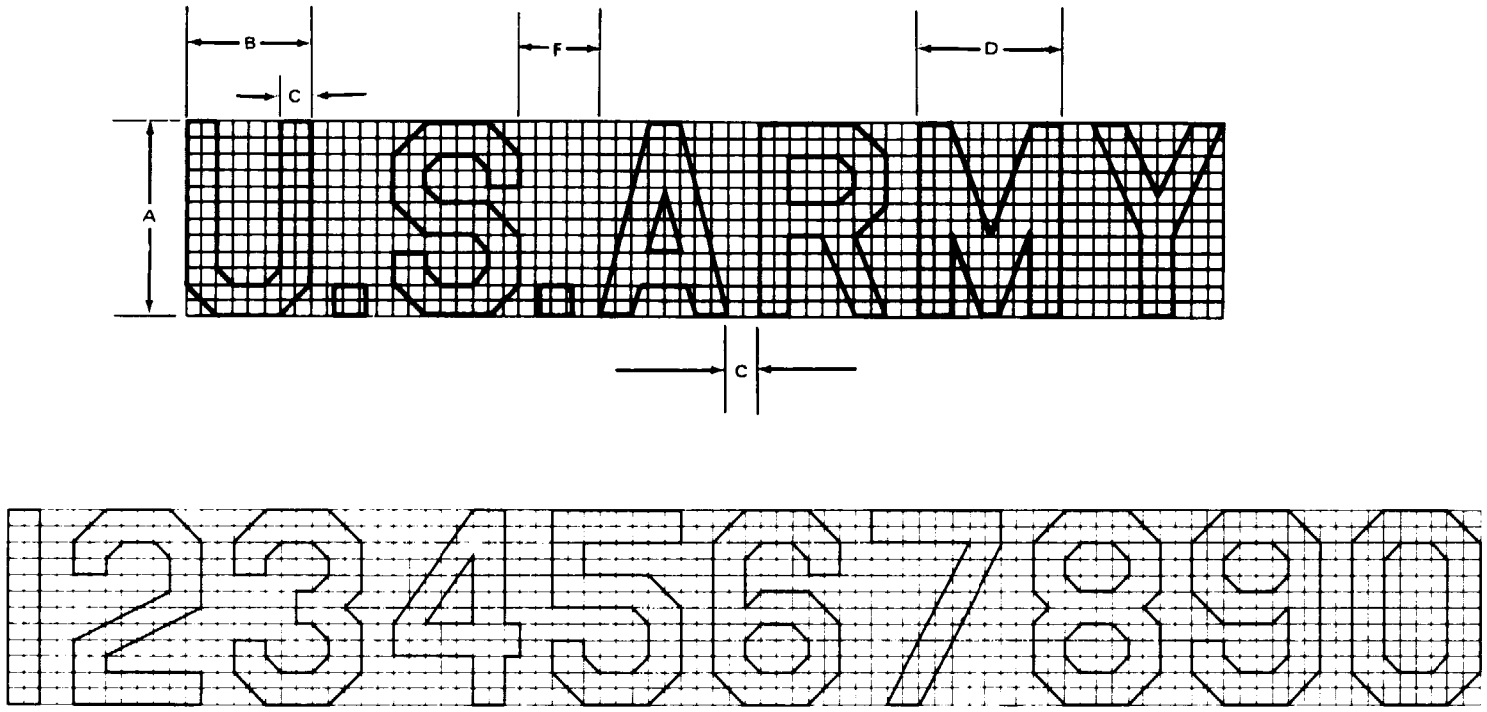

A = HEIGHT OF LETTERS TO BE AS SPECIFIED IN CHAPTER 7, SECTION I
B = WIDTH OF LETTERS TO BE 2/3 THE LETTER HEIGHT
C = STROKE AND SPACE BETWEEN LETTERS TO BE 1/6 THE LETTER HEIGHT
D = THE WIDTH OF THE LETTERS M AND W TO BE 3/4 OF THE HEIGHT
E = WIDTH OF LETTER I AND NUMERAL 1 TO BE 1/6 OF HEIGHT
F = DISTANCE BETWEEN WORDS TO BE 2/3 LETTER HEIGHT

Figure 8-2. Wing and Fuselage Marking (Typical)

FILLING
COLOR-BLACK OR WHITE ACCORDING TO BACKGROUND

1 REFUELING

FILLED FOUR POINTED STAR WITH NOTATION OF NATO CODE NUMBER FOR FUEL AND MAXIMUM FILLING PRESSURE IN ENGLISH AND METRIC SYSTEMS

NATO CODE NO.
MAX FILLING PRESSURE
___ PSI ___ Kg/Cm²

2 OXYGEN (BREATHING)

TWO HORIZONTALLY FILLED RECTANGLES WITH NOTATION OF FILLING PRESSURE IN ENGLISH AND METRIC SYSTEMS. FOR LIQUID SYSTEMS THE WORD "LIQUID" SHALL BE USED INSTEAD OF "GAS" AND THE CAPACITY IN LITERS SHALL BE ADDED

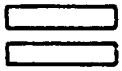

GAS
FILLING PRESSURE
_____PSI
_____Kg/Cm³

3 ROCKET FUELS

FILLED FOUR POINTED STAR IN CRESCENT WITH NOTATION OF NATO CODE NUMBER FOR ROCKET FUEL AND MAXIMUM FILLING PRESSURE IN ENGLISH AND METRIC SYSTEMS

NATO CODE NO.
MAX FILLING PRESSURE
_____ PSI _____Kg/Cm²

4 ANTIDETONANT OR THRUST AUGMENTATION

FILLED WITH CHEVRON WITH NOTATION OF NATO CODE NUMBER AND PERCENTAGES

METHANOL %_____
WATER %_____
NATO
CODE NO.
(METHANOL CODE NO. S-747)

5 ROCKET OXIDIZERS

FILLED CRESCENT WITH NOTATION OF NATO CODE NUMBER FOR ROCKET OXIDIZER AND MAXIMUM FILLING PRESSURE IN ENGLISH AND METRIC SYSTEMS

NATO CODE NO.
MAX FILLING PRESSURE
___ PSI _____ Kg/Cm³

6 AIR CONDITIONING

DOT PATTERN

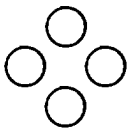

7 ENGINE LUBRICATING OIL

FILLED SQUARE WITH NOTATION OF NATO CODE NUMBER FOR ENGINE LUBRICATING OIL AND MAXIMUM FILLING PRESSURE IN ENGLISH AND METRIC SYSTEMS

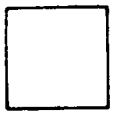

NATO CODE NO.
MAX FILLING PRESSURE
___ PSI _____ Kg/Cm²

8 INERTING SYSTEM

FILLED SQUARE WITH A QUARTER ARC REMOVED FROM EACH CORNER, WITH TYPE OF GAS USED AND PRESSURE IN ENGLISH AND METRIC SYSTEMS

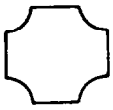

NITROGEN
___PSI
___Kg/Cm²

9 HYDRAULIC FLUID

FILLED CIRCLE WITH NOTATION OF NATO CODE NUMBER FOR HYDRAULIC FLUID AND MAXIMUM FILLING PRESSURE IN ENGLISH AND METRIC SYSTEMS

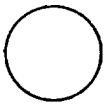

NATO CODE NO.
MAX FILLING PRESSURE
_____ PSI _____ Kg/Cm²

10 FIRE EXTINGUISHING SYSTEM

A FILLED DIAMOND WITH NOTATION SHOWING NATO CODE NUMBER

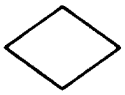

NATO
CODE NO.

11 DEICING

FILLED TRIANGLE WITH NOTATION OF NATO CODE NUMBER FOR DEICING FLUID

NATO
CODE NO.

12 EXTERNAL ELECTRICAL CONNECTIONS

A FILLED VERTICAL BAR WITH THREE EQUALLY SPACED HORIZONTAL BARS ON RIGHT HAND SIDE WITH NOTATIONS TO INDICATE CHARACTERISTICS AND PURPOSE

..SERVICING
..STARTING ETC

28V OR 115V DC
115/200V, 400 CYCLES

13 COOLANT

TWO FILLED HORIZONTAL S's WITH NOTATION OF NATO CODE NUMBER FOR COOLANT AND PERCENTAGE COMPOSITION IF NECESSARY

NATO
CODE NO.
WATER_____%
COOLANT_____%

14 GROUNDING OR EARTHING RECEPTACLE

A FILLED INVERTED "T" WITH TWO PARALLEL BARS UNDERNEATH WHICH DIMINISH IN SIZE

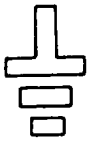

GROUND (EARTH) HERE

000895

Figure 8-3. NATO Marking Symbols (sheet 1 of 5)

FILLING (CONT)
COLOR-BLACK OR WHITE ACCORDING TO BACKGROUND

15 PNEUMATIC SYSTEM

FILLED WITH NOTATION OF MAXIMUM CHARGING PRESSURE IN ENGLISH AND METRIC SYSTEMS

MAX CHARGING PRESSURE
____ PSI ____ Kg/Cm2

17 FUEL TANK WATER GRAIN OFF

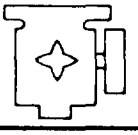

16 PNUMATIC STARTER CONNECTION

A FILLED X CIRCUMSCRIBED BY A FILLED RING NOTATION OF MAXIMUM OPERATING PRESSURE IN ENGLISH AND METRIC SYSTEM

MAX OPERATING PRESSURE
____ PSI ____ Kg/Cm2

16A

FLIGHT DATA RECORDER

BLACK SYMBOLS ON WHITE BACKGROUND OR WHITE SYMBOLS ON BLACK BACKGROUND

GROUND HANDLING
COLOR-YELLOW OR ORANGE
OUTLINE SYMBOLS IN BLACK OR WHITE ACCORDING TO BACKGROUND

18 JACKING POINT

YELLOW FILLED SQUARE WITH TWO SLANTING LEGS ON BOTTOM SIDE

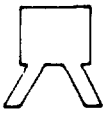

19 TOWING

ORANGE FILLED RING

NOTE:
OPTIONAL WHERE TOWING POINT IS OBVIOUS AND SUITABLE LOCATION FOR SYMBOL IS NOT AVAILABLE

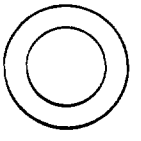

20 SLINGING OR HOISTING POINTS

YELLOW FILLED HOOK ON A HORIZONTAL LINE

21 TAIL SUPPORT

ORGANGE CIRCLE AROUND THE POINT OF SUPPORT

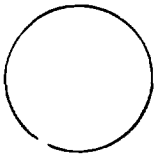

22 MOORING OR PICKETING

YELLOW FILLED ANCHOR

23 LOCKING OF DROP TANK

ORANGE FILLED STAR

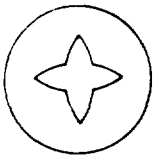

Figure 8-3. NATO Marking Symbols (Sheet 2 of 5)

GROUND HANDLING (CONT)
COLOR-YELLOW OR ORANGE

23A TELEPHONE CONNECTION GROUND TO COCKPIT

FILLED AVIATION YELLOW SYMBOL AS SHOWN

23B DRINKING WATER REPLENISHMENT

AVIATION YELLOW DISC SURROUNDING THE SYMBOL

23C TOILET SERVICING

AVIATION YELLOW DISC SURROUNDING THE SYMBOL

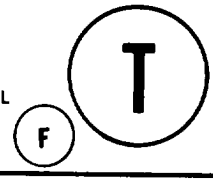

HAZARD
COLOR-RED
OUTLINE SYMBOLS IN BLACK OR WHITE ACCORDING TO BACKGROUND

24 EXPLOSIVE ACTUATED DEVICES

RED FILLED EQUILATERAL TRIANGLE WITH 9-IN SIDES AND WITH APEX POINTING DOWNWARD WITH THE WORD "DANGER" ON EACH SIDE OF TRIANGLE

MARK BOTH SIDES OF FUSELAGE

25 AIRBORNE POWER PLANT INLET AND/OR EXHAUST

COLOR CODE

RED BLACK

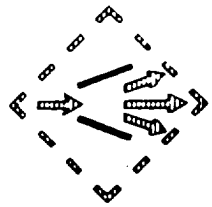

26 WALKWAYS

SURROUNDED BY AN ORANGE BORDER WITH RED FRINGE OUTSIDE

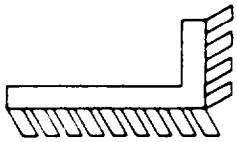

00089c

27 REFRIGERANT REPLENISHMENT

TWO RED FILLED TRIANGLES WITH APEXES JOINED ON HORIZONTAL CENTER LINE

27A NO STEP

A FILLED FOOTPRINT WITH A RED DIAGONAL CROSS SUPERIMPOSED

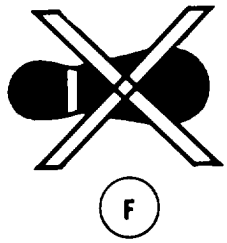

FUNCTION	PART TO BE MARKED	MARKING METHOD
28 LOCKING OF CONTROLS AND UNDERCARRIAGE	UPRIGHTS AND CROSSBARS	PAINTED RED AND WHITE AND FITTED A RED PENNANT
	POSITION OF UPRIGHTS AND CROSSBARS	PAINTED IN RED
29 PITOT TUBE COVERING	COVER	PAINTED IN RED
30 CAMERA GUN COVERING	CAMERA GUN CAP	PAINTED IN RED

Figure 8-3. NATO Markings Symbols (Sheet 3 of 5)

HAZARD (CONT) COLOR-RED		
FUNCTION	**PART TO BE MARKED**	**MARKING METHOD**
31 JET ENGINE COVERING	TAMPIONS	PAINTED IN RED
32 ROCKET CONTROL	ELECTRIC PLUG	RED WHITE RED AND WHITE PENNANT
33 ANTIFIRING CONTROL	SHUNT	RED PENNANT WITH BLACK SKULL AND CROSS BONES
34 PROHIBITION OF ACCESS	WEAKER PARTS OF AIRCRAFT	BORDER BAND AND CROSS OF ST ANDREWS IN RED

MAINTENANCE
COLOR-ORANGE

35 INSPECTION OF DEICING CIRCUIT

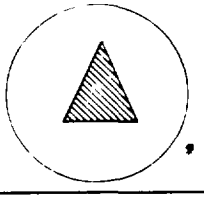

36 HYDRAULIC SYSTEM TEST

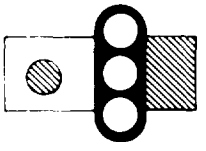

37 INSPECTION OF ELECTRONIC INSTALLATION

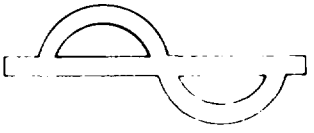

38 NITROGEN TANK SYSTEM TEST

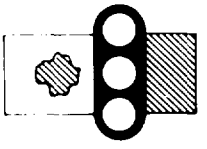

39 INSPECTION OF FUEL FILTER

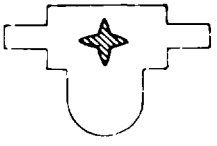

40 CABIN PRESSURE TEST

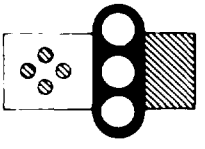

41 INSPECTION OF STATIC CONNECTION

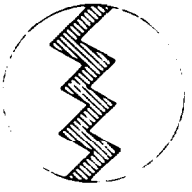

42 INSPECTION OF BATTERY

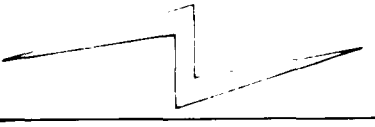

43 IGNITION PLUG FOR STARTING JET ENGINE

43A DINGHY STORAGE

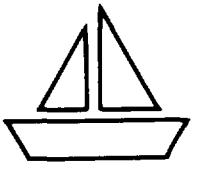

Figure 8-3. NATO Marking Symbols (Sheet 4 of 5)

ARMAMENT AND AMMUNITION
COLOR-GREEN

FUNCTION	PART TO BE MARKED	SYMBOL
44 GUN		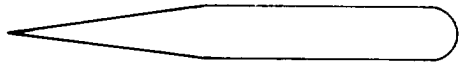
45 FIRING	SHUNT FOR CUTTING OUT FIRING SAFETY CONTROL	
	CARTRIDGE CONTAINER	
46 FEEDING OF GUNS	CARTRIDGE CASE	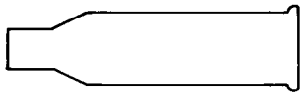
	LINKS CONTAINER	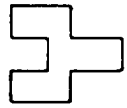
47 ROCKETS CONTROL	SELECTION PLUG	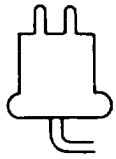
48 BOMB RACKS	ATTACHMENT POINT FOR HOIST	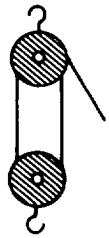

NOTE:

LETTERING WHICH SUPPLEMENTS THE SYMBOLS SHALL BE IN THE SCALE 1 TO 4 IN RELATION TO THE SYMBOL

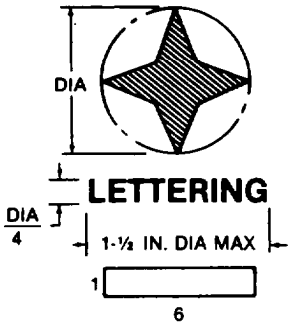

DIMENSIONS ± 0.05 IN.	
DIA	DIA/4
2 INCHES	½ INCH
4 INCHES	1 INCH

Figure 8-3. NATO Marking Symbols (sheet 5 of 5)

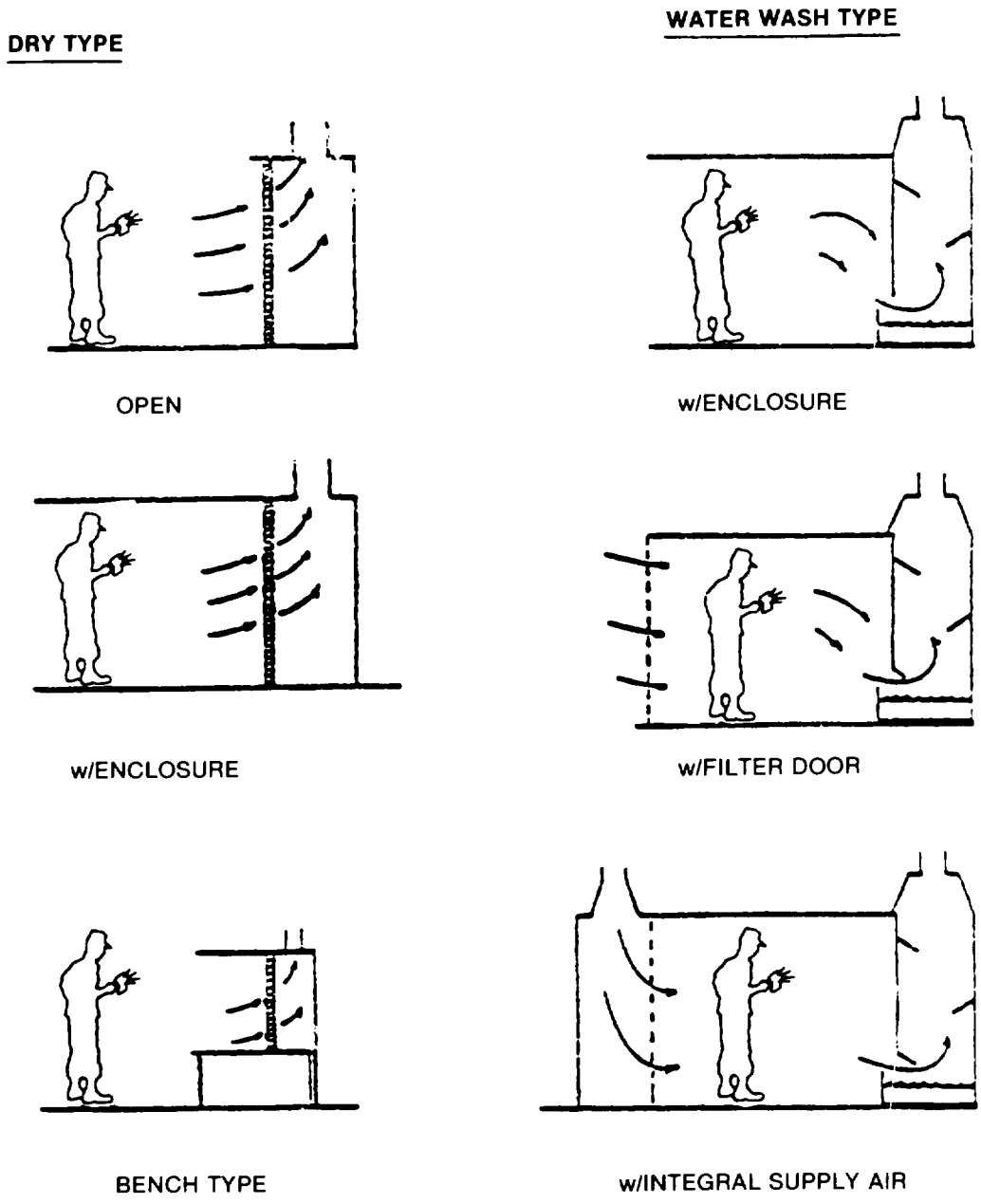

Figure 8-4. Sidedraft Paint Booths

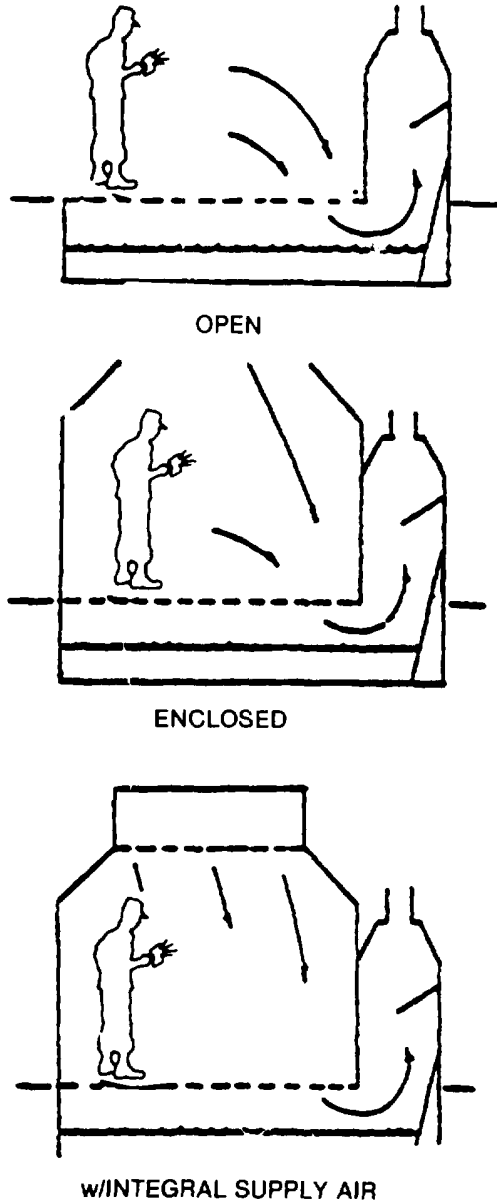

Figure 8-5. Downdraft Paint Booths

COMPARTMENT C

Figure 8-6. Typical Compartment Markings

Figure 8-7. First Aid Kit

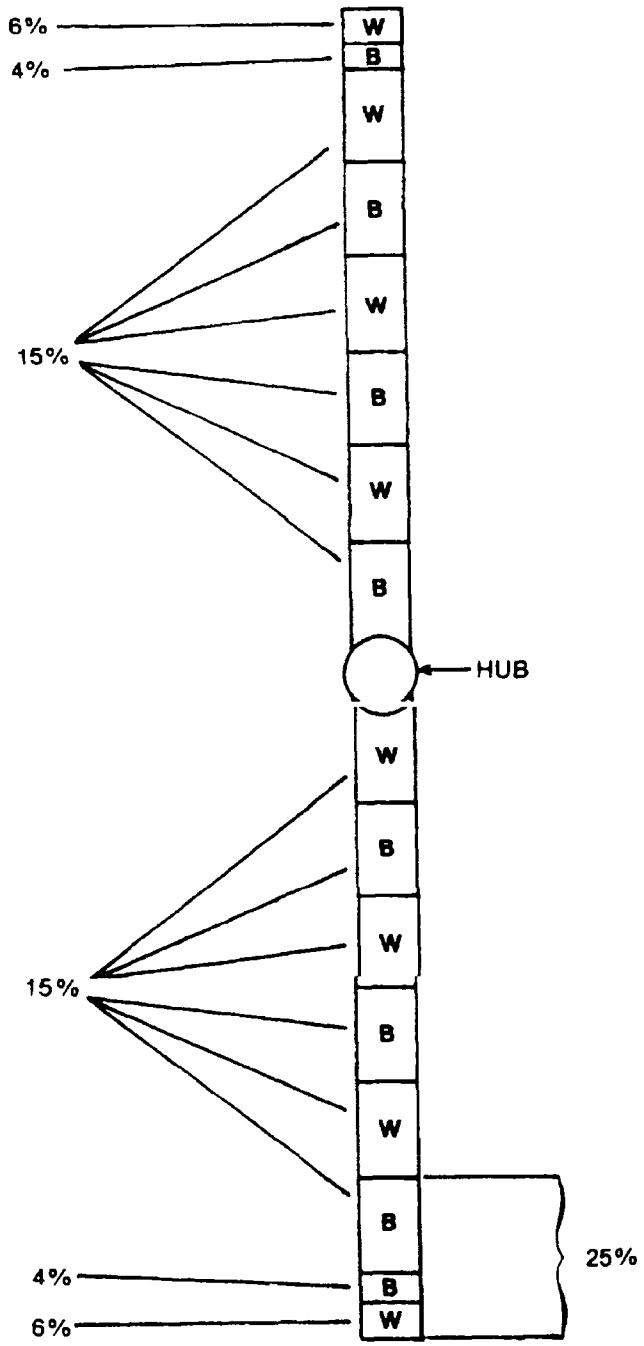

W = GLOSS WHITE
MIL-L-19537
SHADE 17875

B = GLOSS BLACK
MIL-L-19537
SHADE 17038

Applies to Helicopter Main Rotors

PERCENTAGES ARE BASED ON PAINTABLE AREA OF BLADES

FOR ARCTIC AREAS OPTIONAL FOR MAIN ROTOR BLADES: 25% MAY BE FLUORESCENT RED-ORANGE
MIL-L-21600
SHADE NO. 633

Figure 8-8. Optimum High Visibility Paint Scheme, Two Blade, Exposed Hub

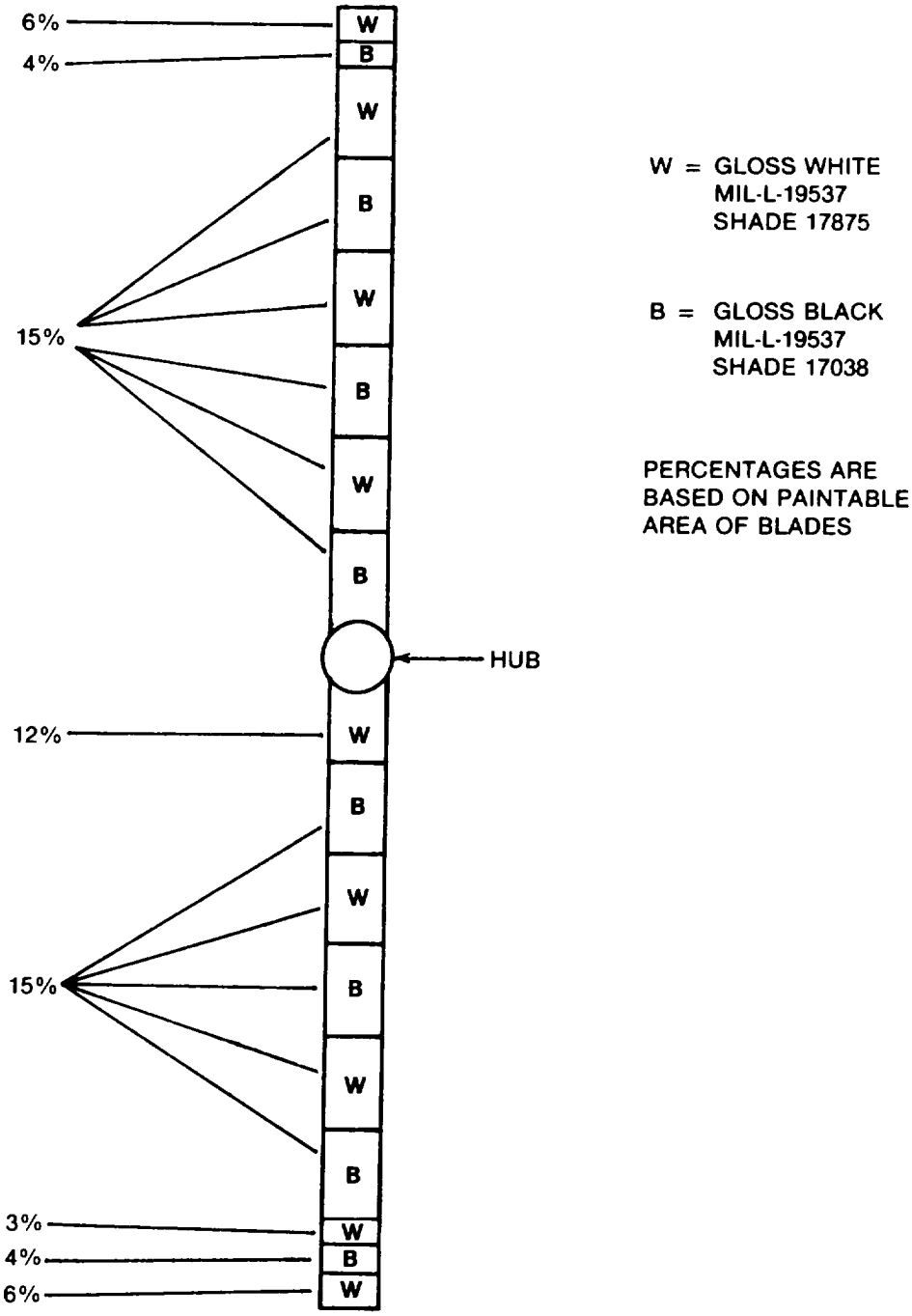

Figure 8-9. Optimum High Visibility Paint Scheme, Two Blades, Helicopter Tail Rotor Only

Page 8-32, Figure 8-10 DELETED

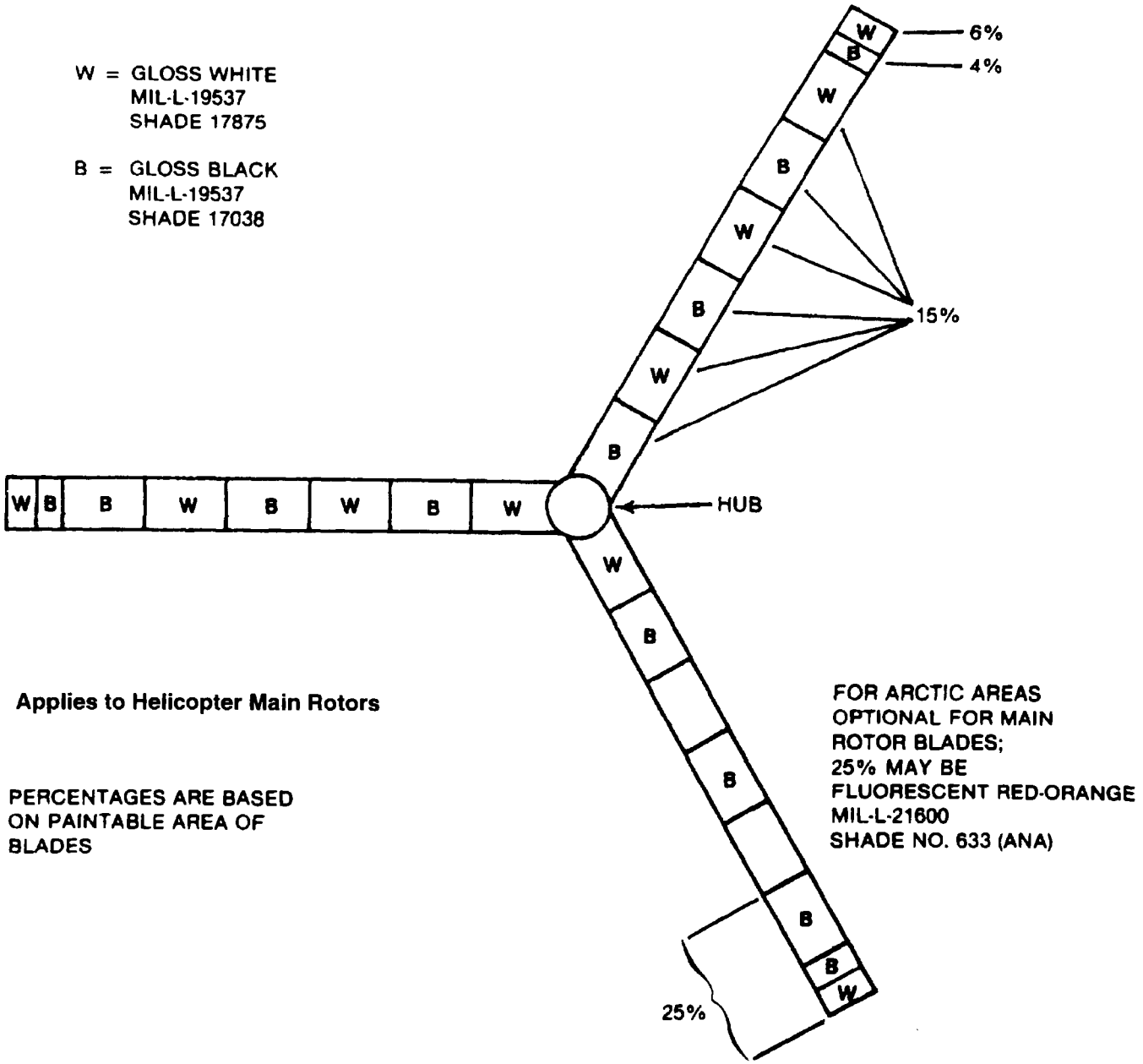

Figure 8-11. Optimum High Visibility Paint Scheme, Three Blades, Exposed Hub

B = Flat Black P/N G2002 (MFG U.S. PAINT)

W = White P/N G-8022 (MFG U.S. PAINT)

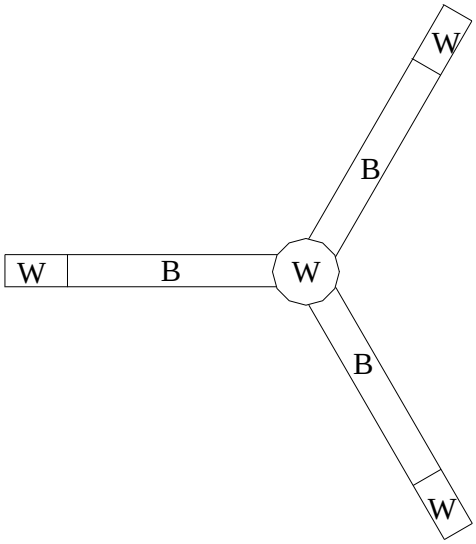

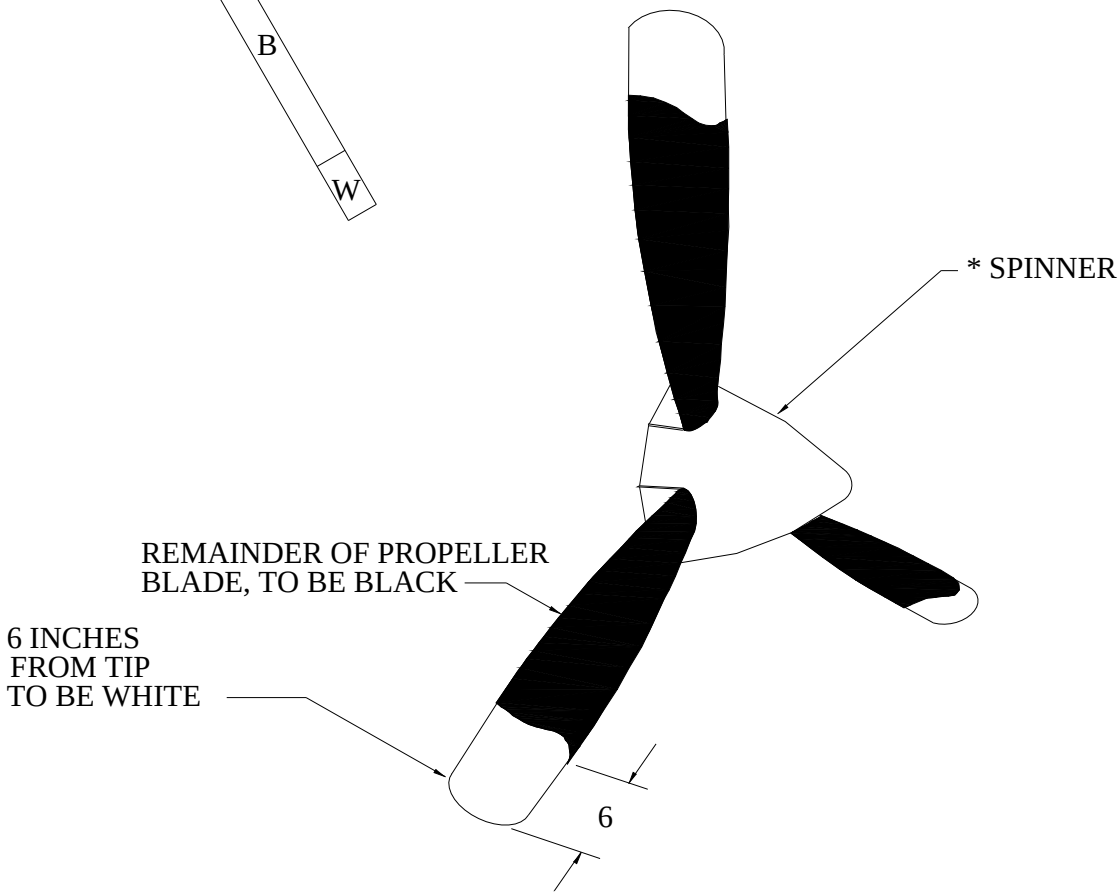

APPLIES TO PROPELLERS ONLY.

*SPINNER SHALL BE PAINTED WHITE- UNLESS RECEIVED UNPAINTED, IN WHICH CASE IT SHALL BE POLISHED.

FIGURE 8-12. Optimum High Visibility Paint Scheme, Three Props, with Spinner.

B = Flat Black P/N G2002 (MFG U.S. PAINT)

W = White P/N G-8022 (MFG U.S. PAINT)

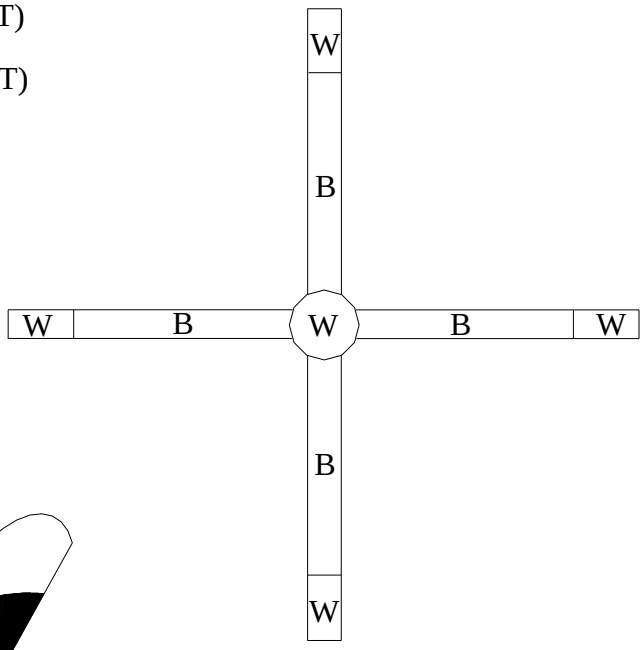

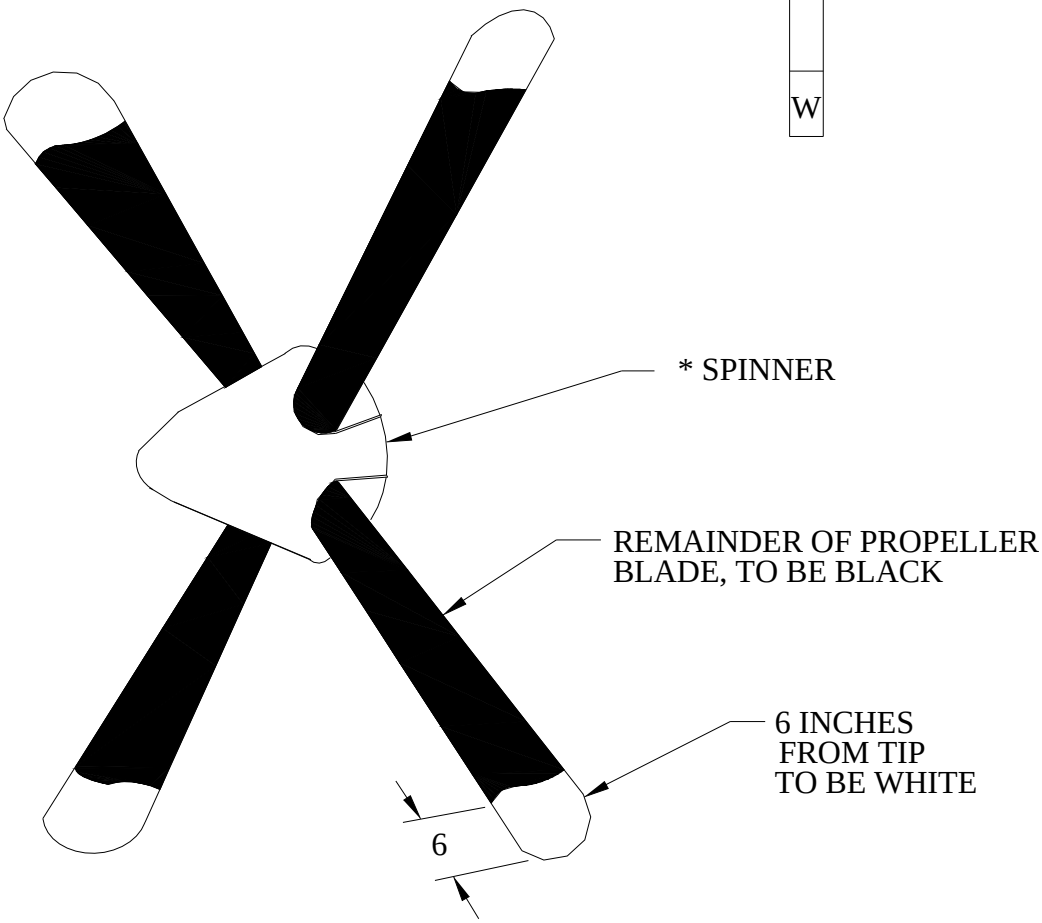

APPLIES TO PROPELLERS ONLY.

*SPINNER SHALL BE PAINTED WHITE- UNLESS RECEIVED UNPAINTED, IN WHICH CASE IT SHALL BE POLISHED.

Figure 8-13. Optimum High Visibility Paint Scheme, Four Props, with Spinner.

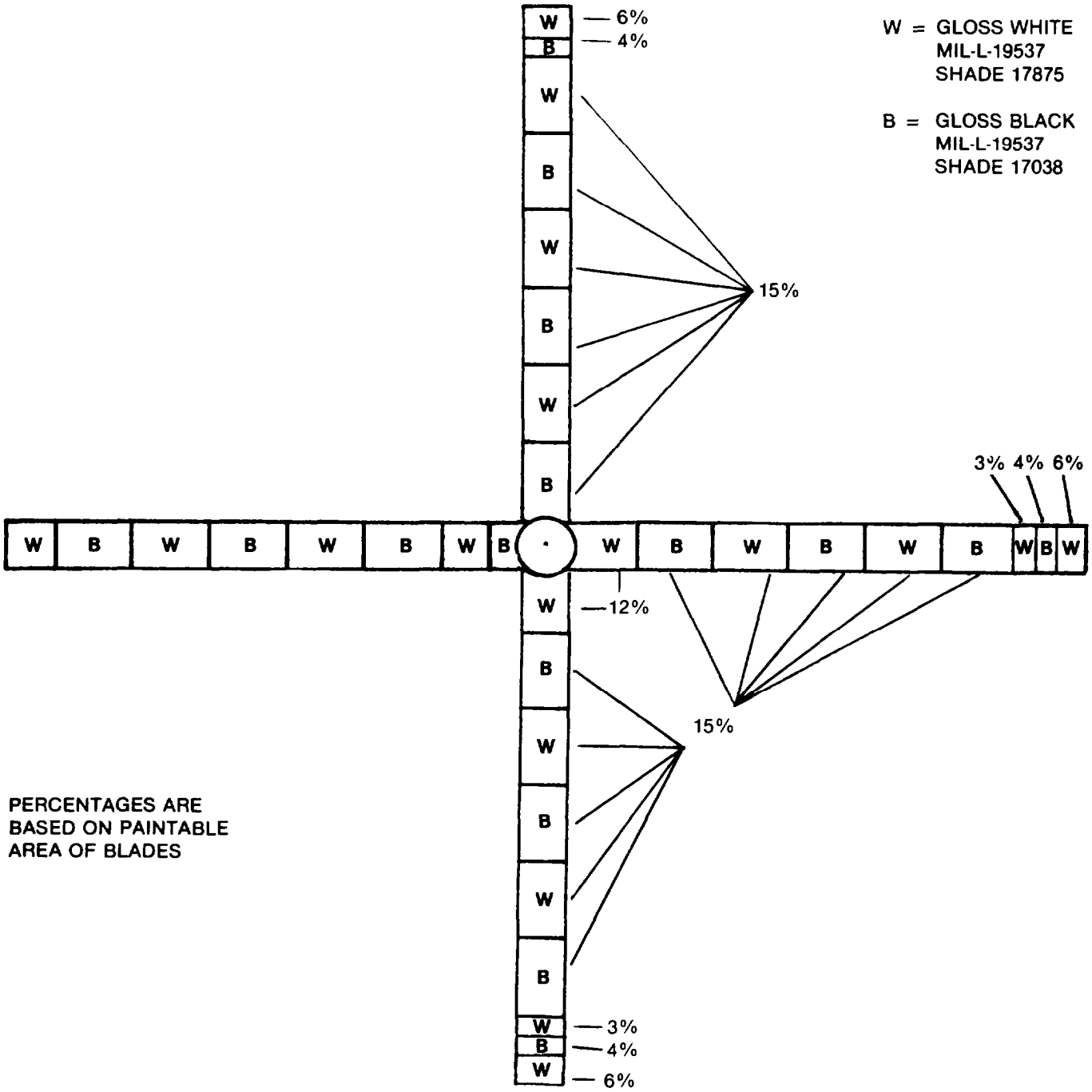

Figure 8-14. Optimum High Visibility Paint Scheme, Four Blades, Helicopter Tail Rotor Only

CHAPTER 9
HELICOPTER ILLUSTRATIONS

SECTION I DELETED

Pages 9-2 through 9-12 and Figures 9-1 through 9-3 have been deleted.

SECTION II AH-64 ILLUSTRATIONS

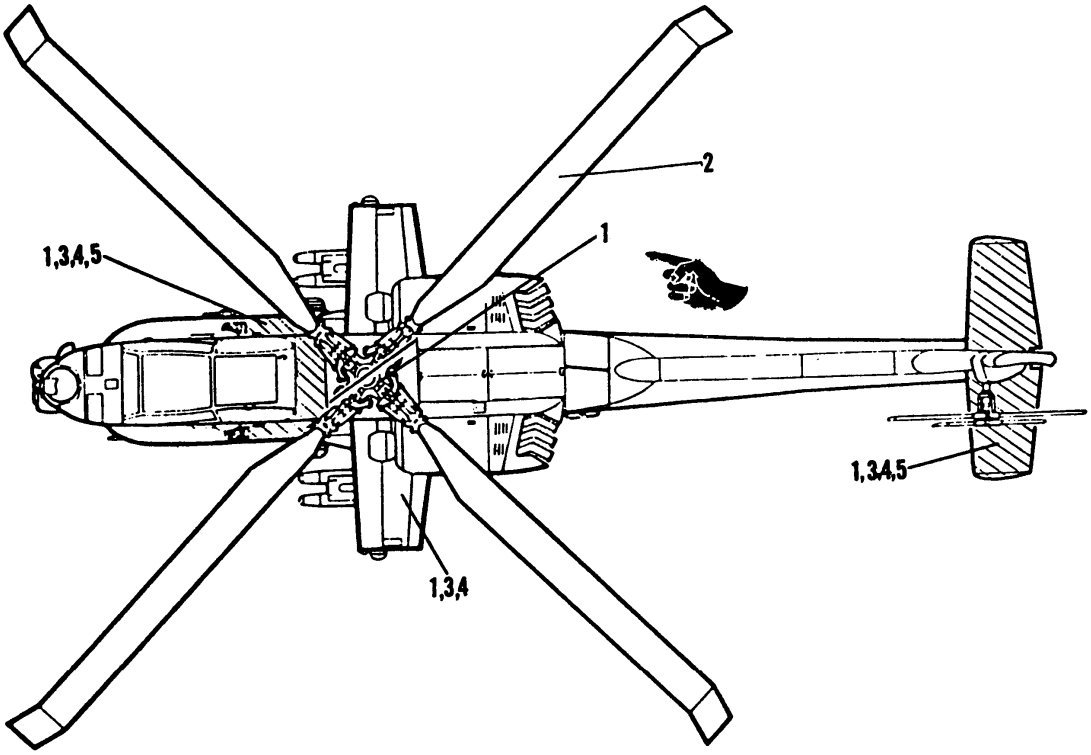

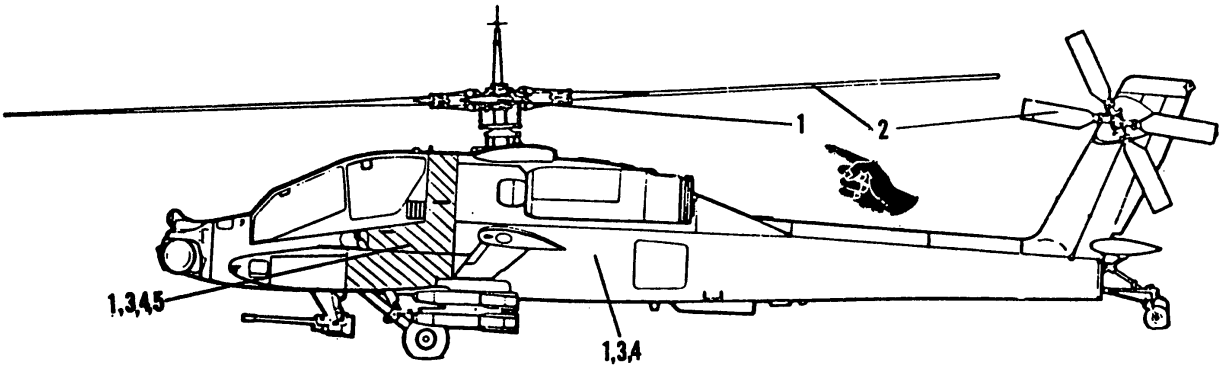

1. MIL-DTL-64159 or MIL-DTL-53039, Aircraft Green (entire aircraft, except as noted).
2. MIL-DTL-64159 or MIL-DTL-53039 Aircraft Black.
3. MIL-DTL-64159 or MIL-DTL-53039, Dark Sand (entire aircraft or high conspicuous paint scheme when authorized, desert operations only). See Paragraph 5-11.
4. MIL-DTL-64159 or MIL-DTL-53039 Aircraft White (entire aircraft or high conspicuous paint scheme when authorized, arctic operations only). See Paragraph 5-11.
5. MIL-P-21600, Fluorescent Red-Orange. ANA #633 (training aircraft-high visibility, only where authorized).

Figure 9-4. Tactical Paint Scheme, AH-64

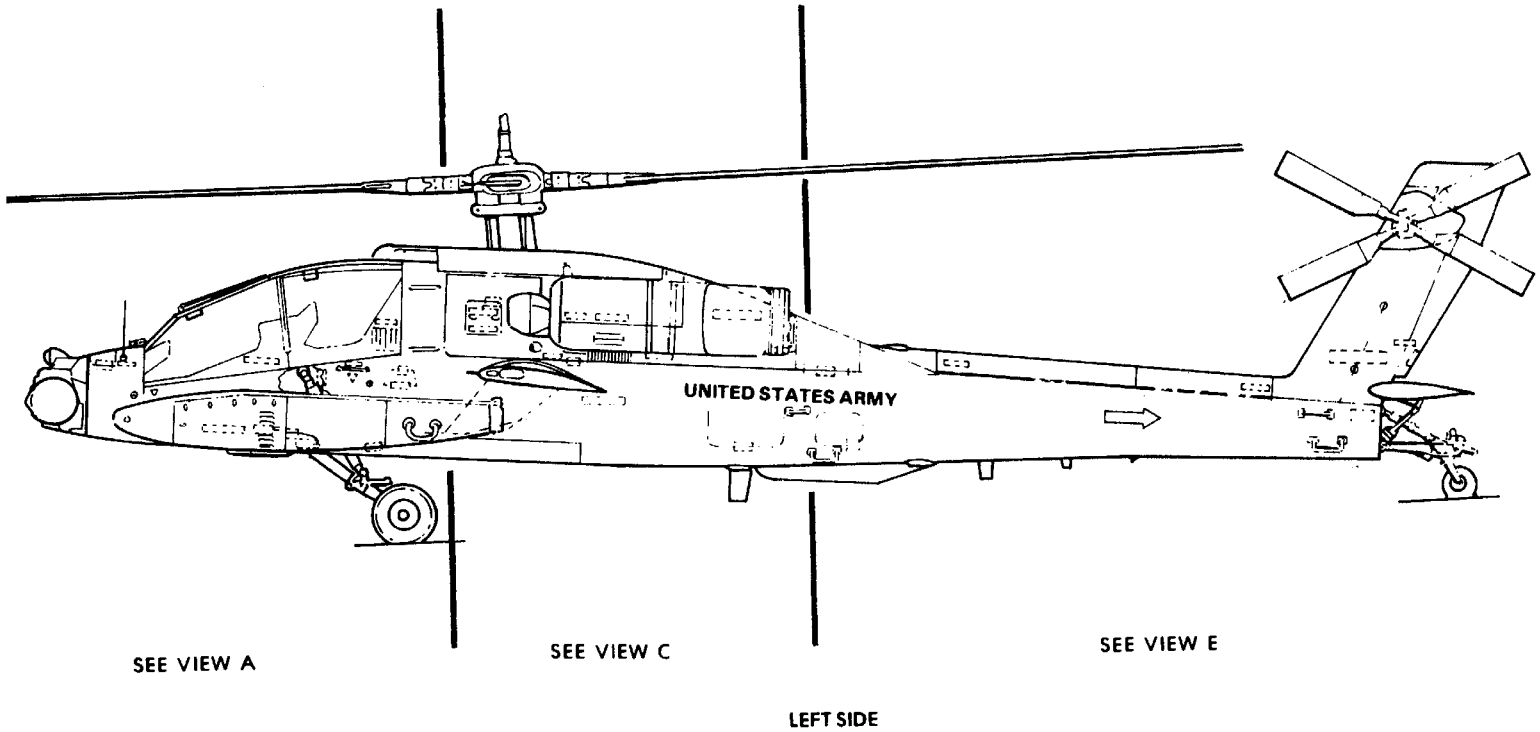

Figure 9-5. Exterior and Interior Markings, AH-64 (Sheet 1 of 19)

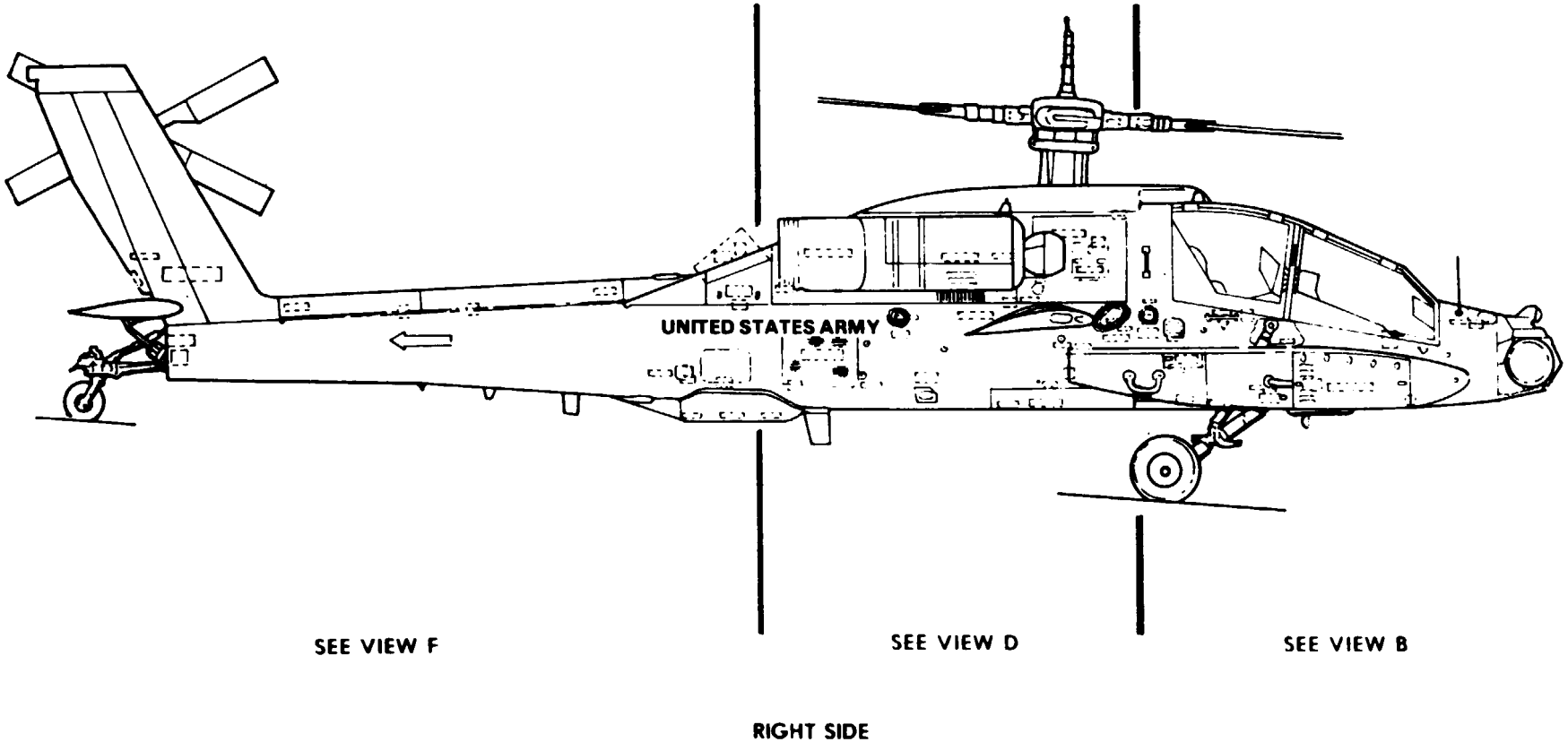

Figure 9-5. Exterior and Interior Markings, AH-64 (Sheet 2 of 19)

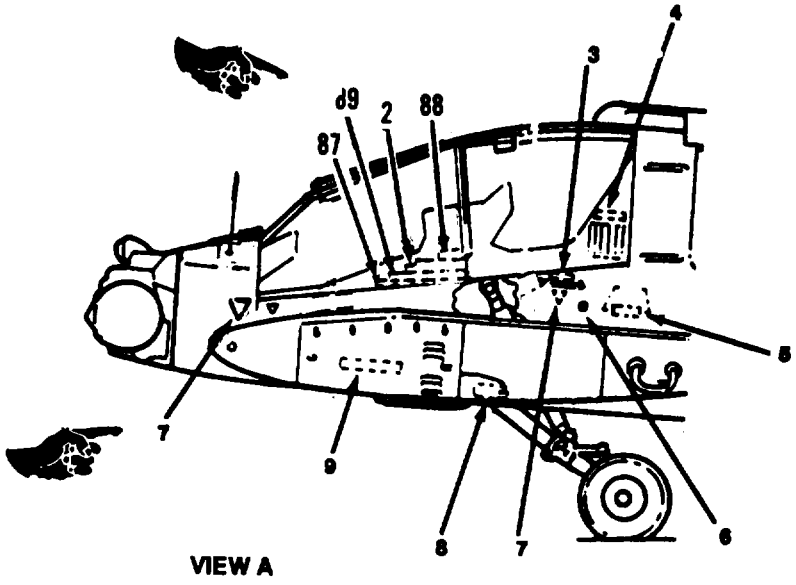

LEFT SIDE

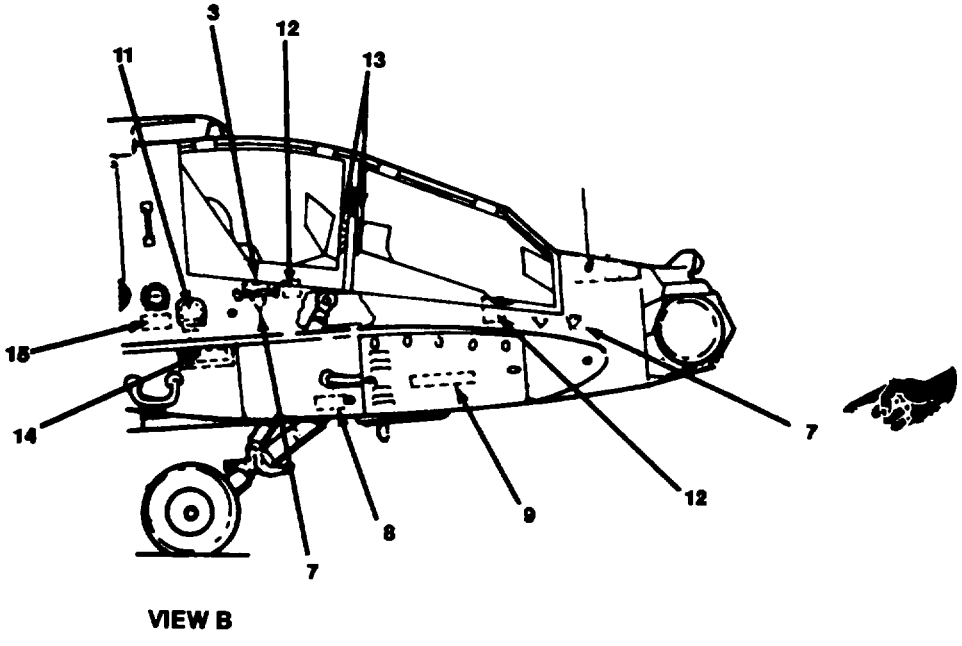

RIGHT SIDE

Figure 9-5. Exterior and Interior Markings, AH-64 (Sheet 3 of 19)

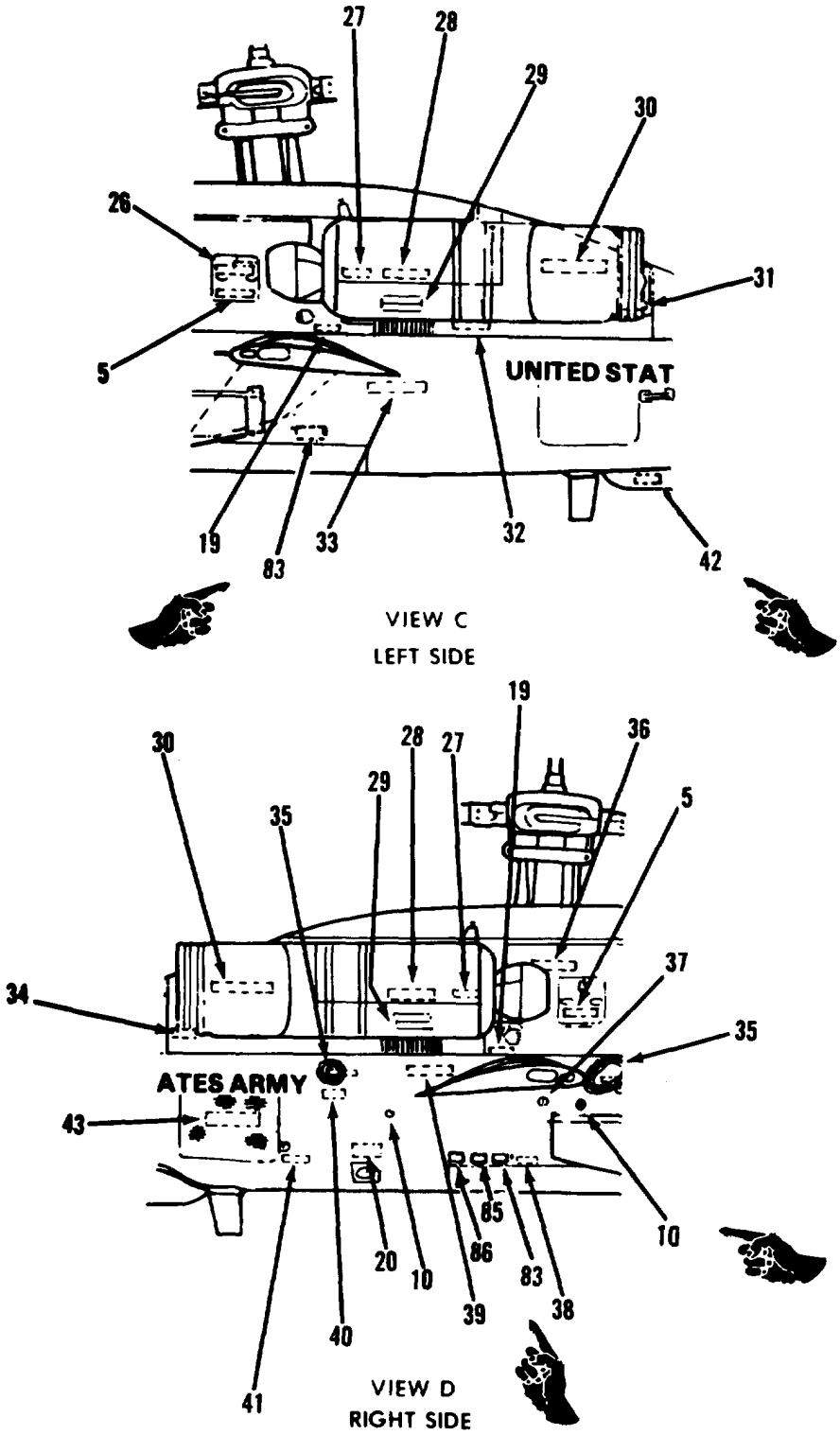

Figure 9-5. Exterior and Interior Markings, AH-64 (Sheet 4 of 19)

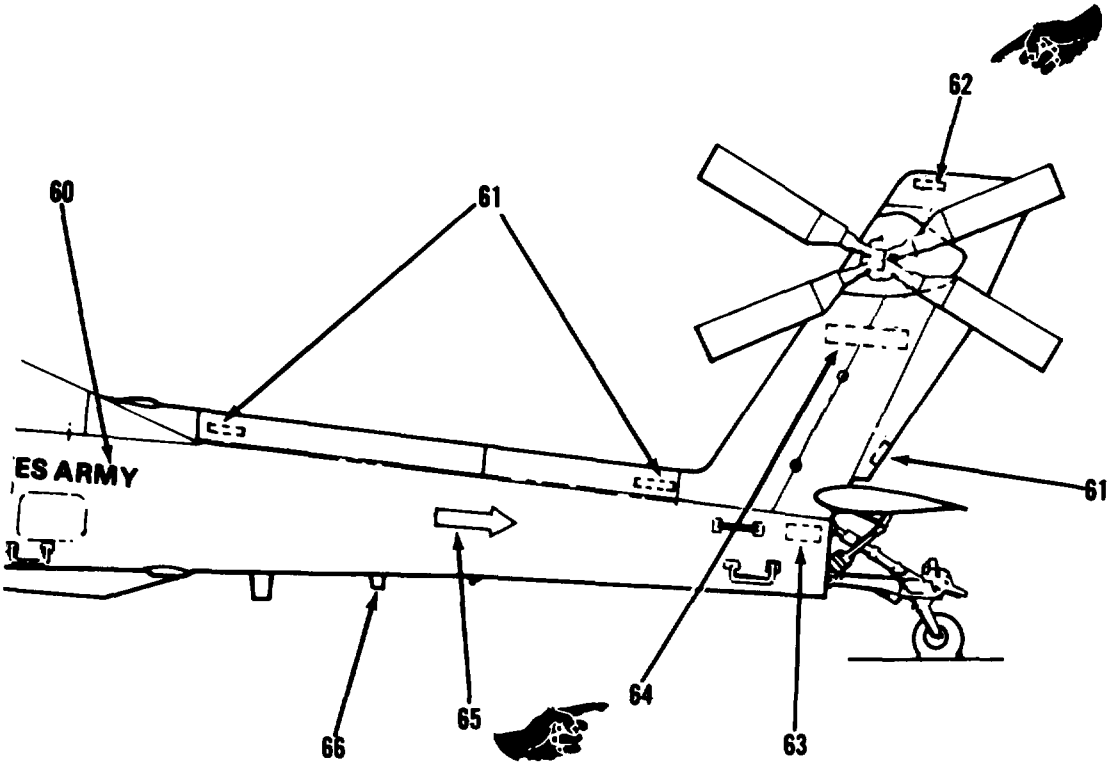

VIEW E
LEFT SIDE

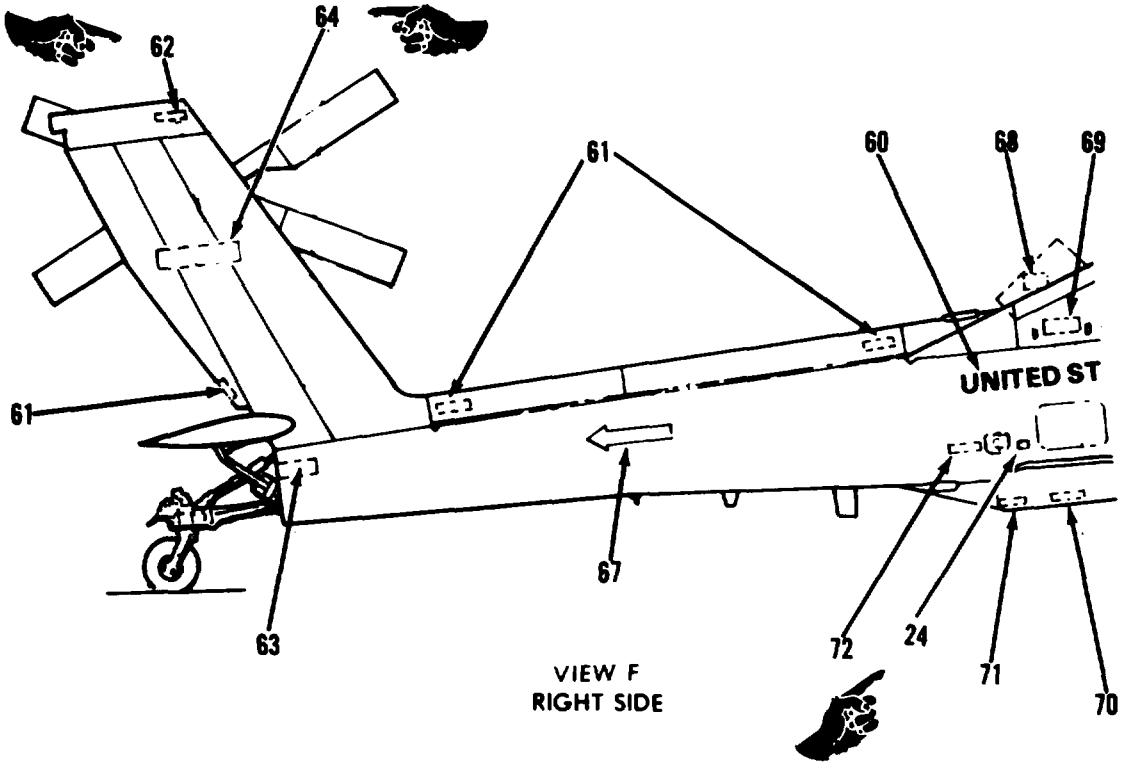

VIEW F
RIGHT SIDE

Figure 9-5. Extetior end Intetior Markings, AH-84 (Sheet 5 of 19)

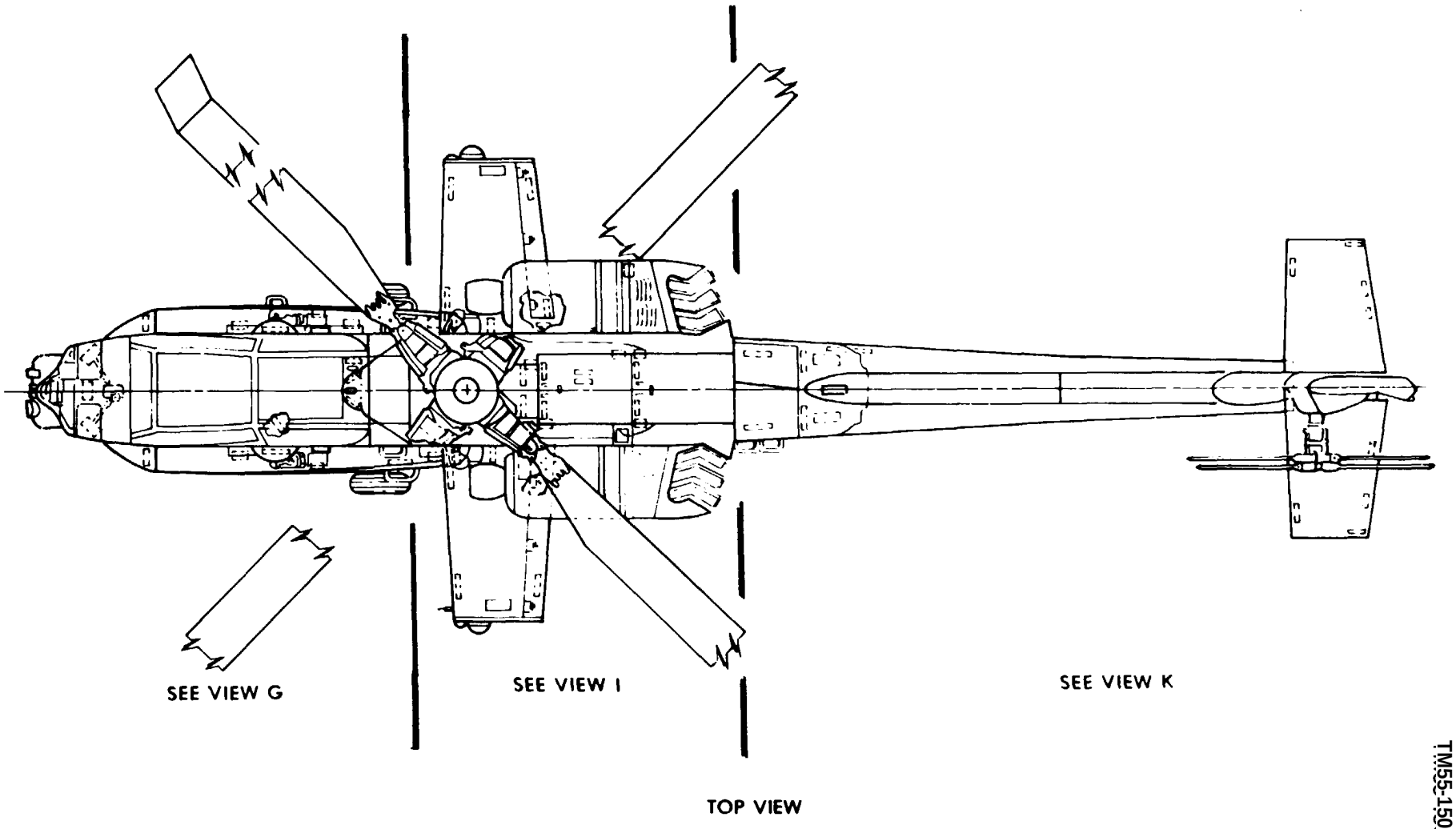

Figure 9-5. Exterior and Interior Markings, AH-64 (Sheet 6 of 19)

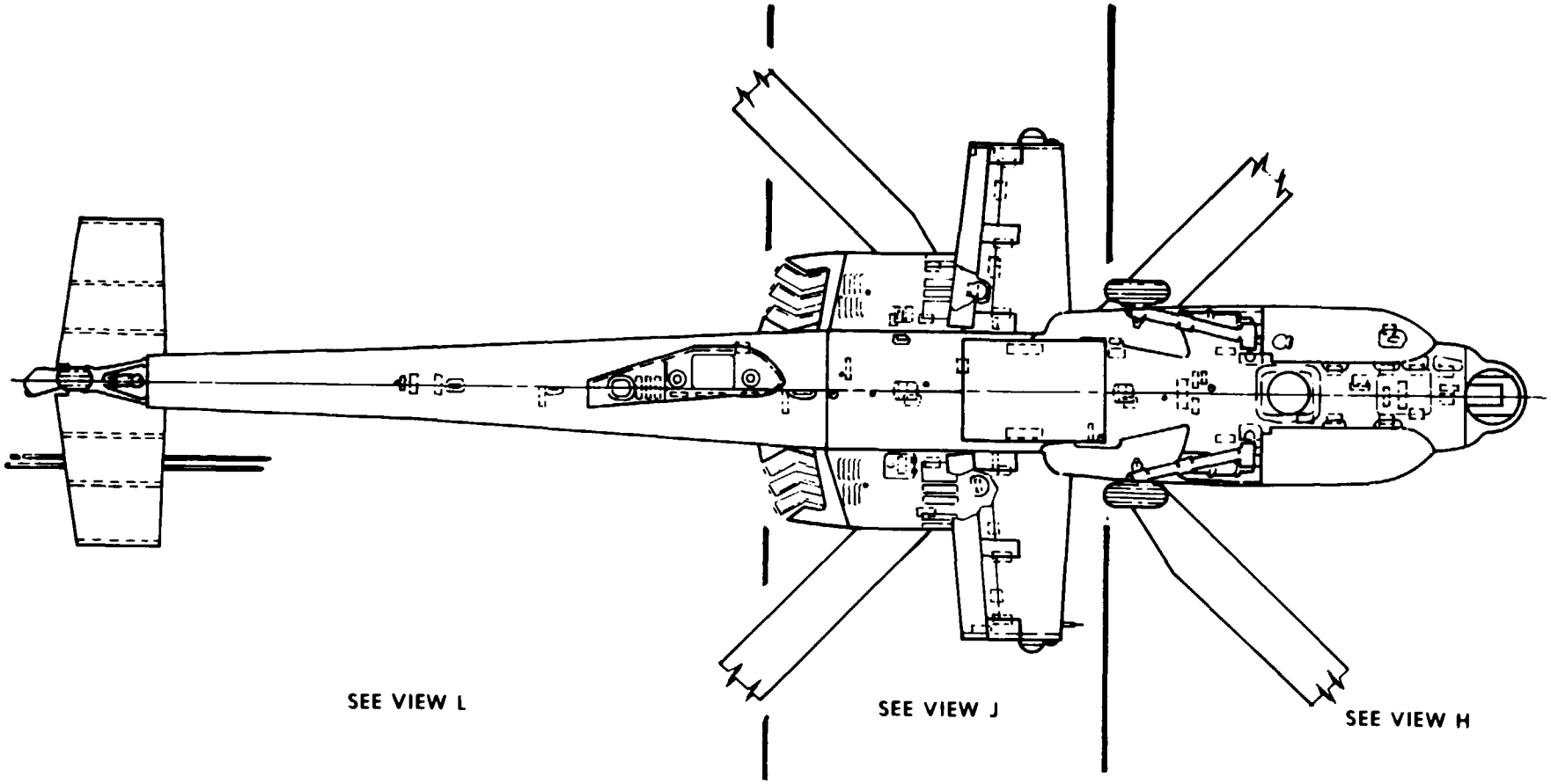

BOTTOM VIEW

Figure 9-5. Exterior and Interior Markings, AH-64 (Sheet 7 of 19)

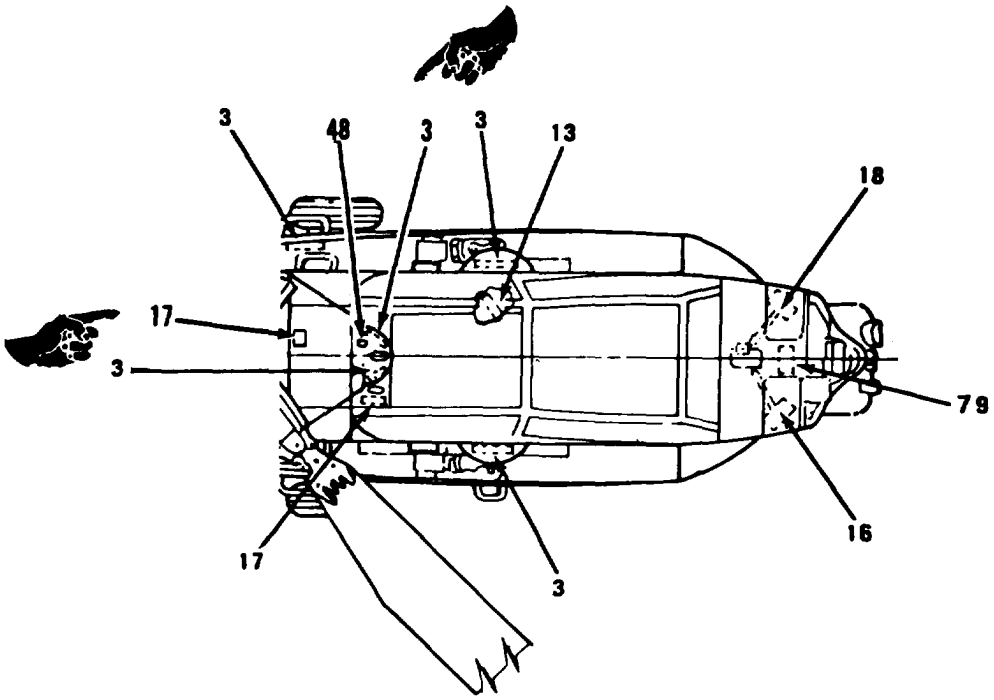

VIEW G
TOP VIEW

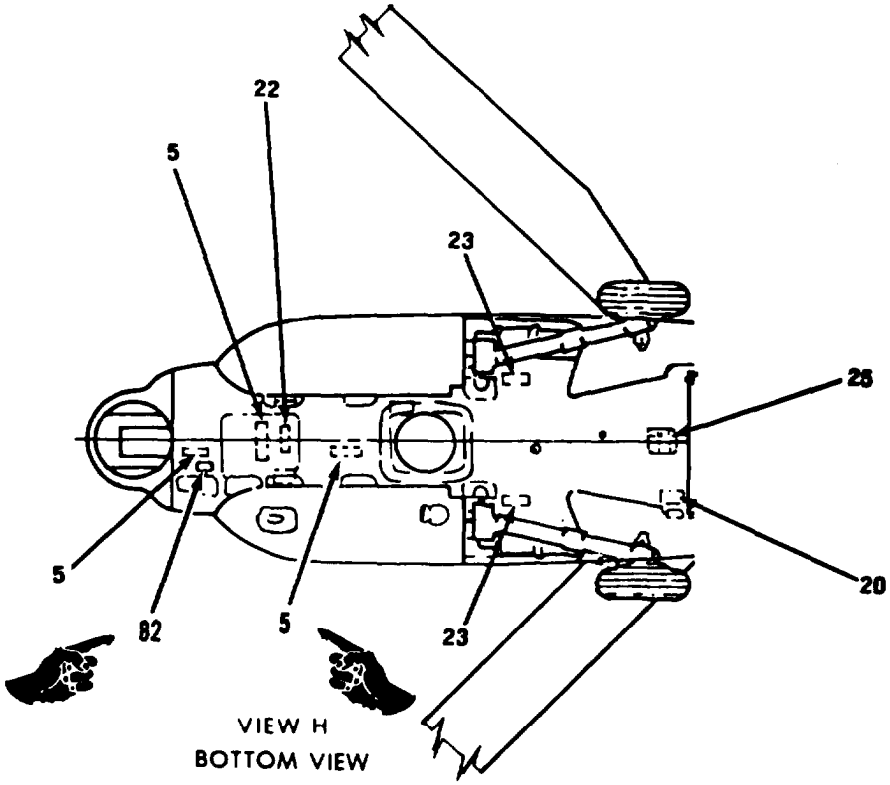

VIEW H
BOTTOM VIEW

Figure 9-5, Exterior and Interior Markings, AH-64 (Sheet 8 of 19)

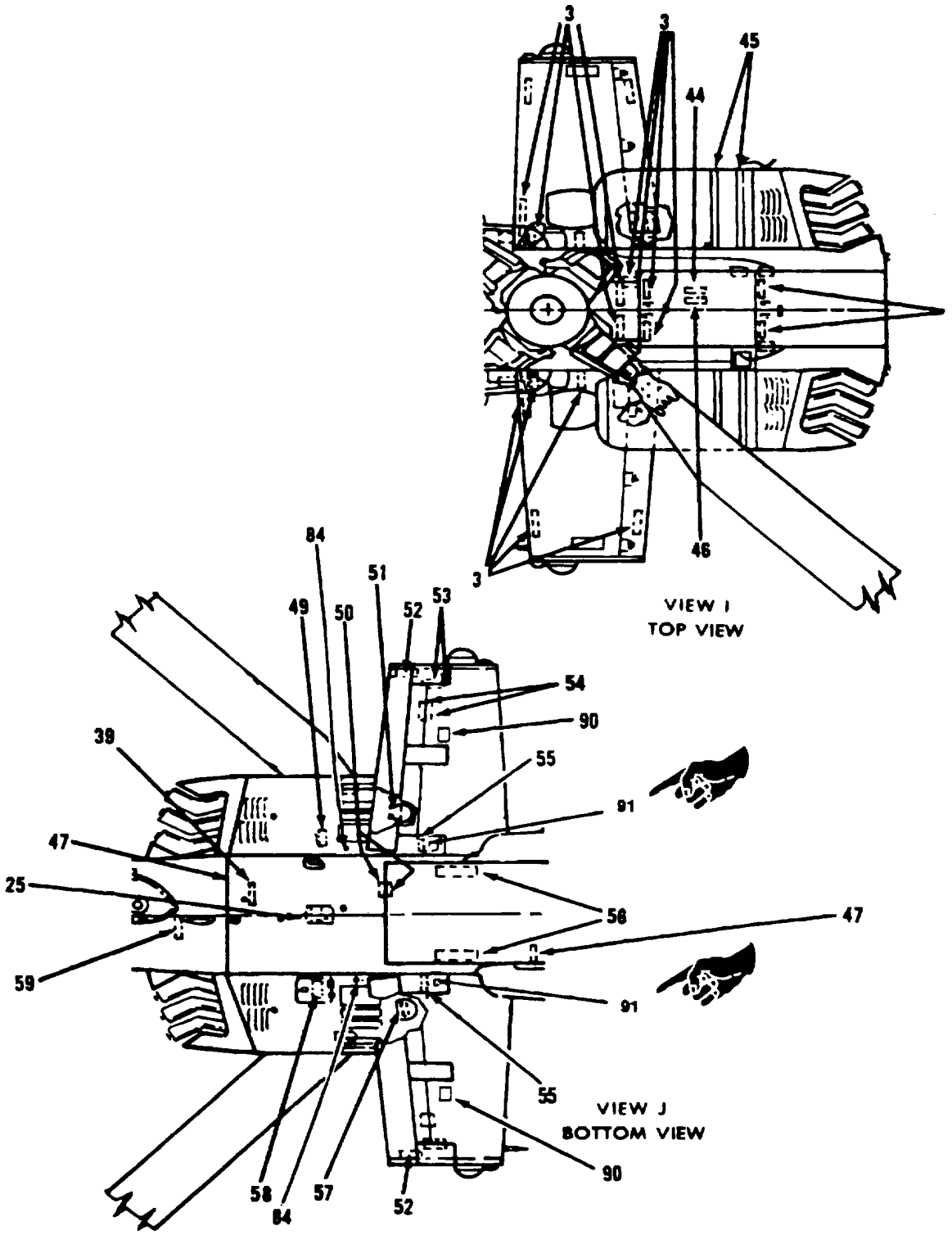

Figure 9-5. Exterior and Interior Markings, AH-64 (Sheet 9 of 19)

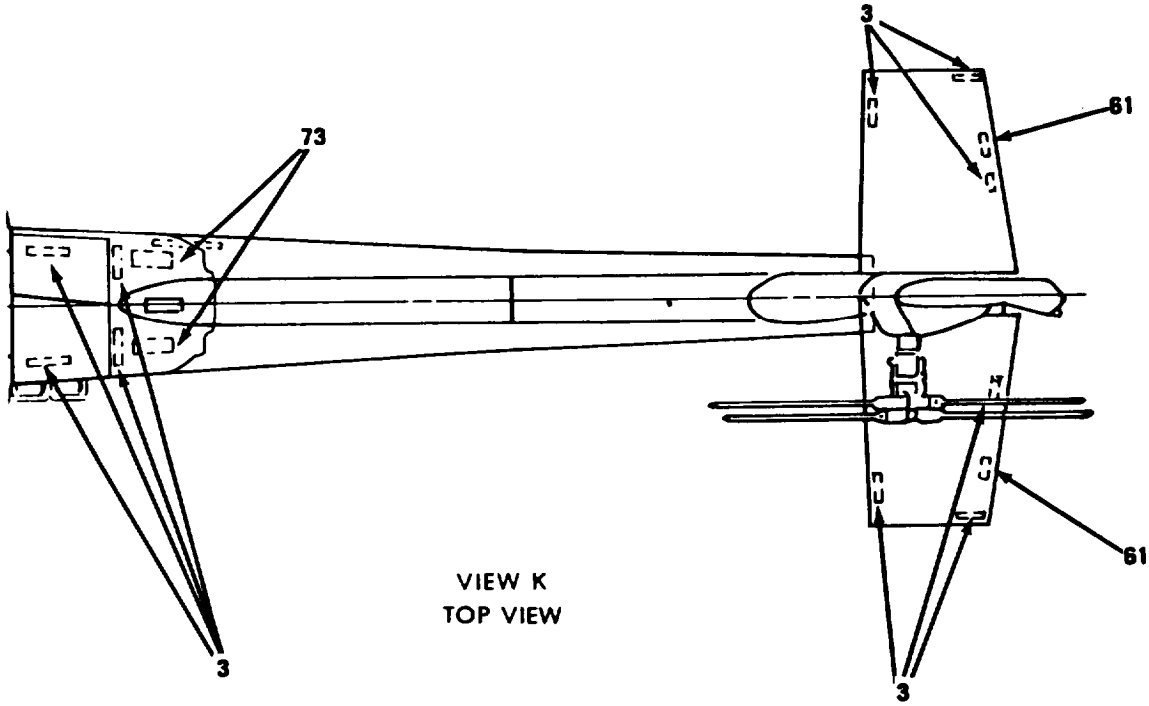

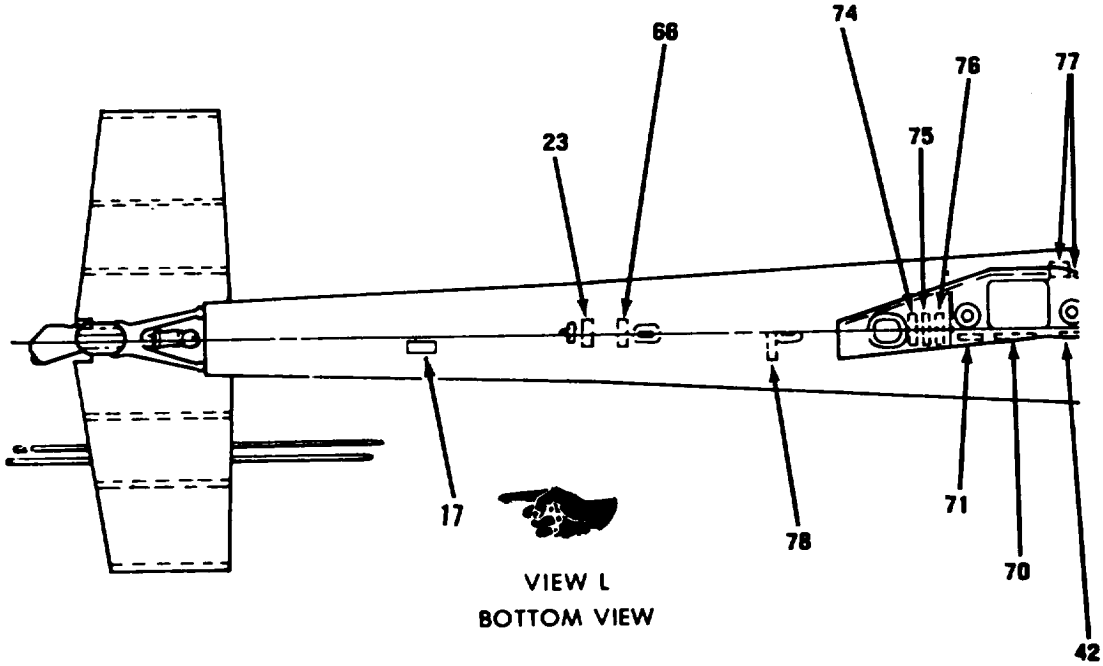

Figure 9-6. Exterior and Interior Markings, AH-64 (Sheet 10 of 19)

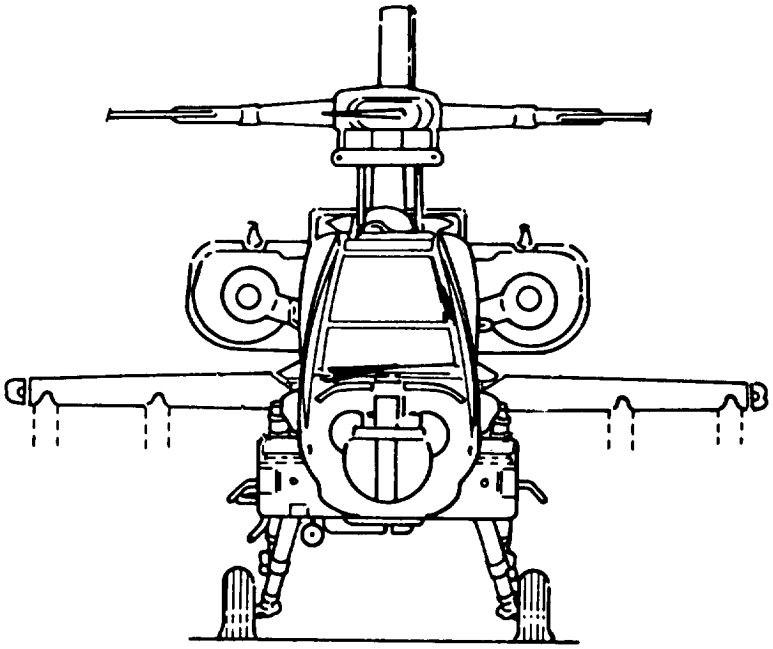

FRONT VIEW

Figure 9-5. Exterior and Interior Makings, AH-64 (Sheet 11 of 19)

CODE NO.	DIRECTIONS	WORDING
1	Deleted	
2	LH side of canopy at FS 103.50. Locate below sill and center for best fit with Codes 87 and 89. I-in. aircraft black letters.	Us. ARMY AH-64A U.S. A SERIAL NO. 00000
3	1/2-in. aircratft black letters, 13 required.	NO STEP
4	LH side of cannopy above louvers at FS 150.00, WL 157.20, l/2-m aircraft black letters.	EMERGENCY AIR INLET
5	LH and RH side of fuselage on transmiss io n access doors, LH side of fuselage at FS 160.00, WL 135.00, on fuselage lower surface at FS 60.00, BL 0.00 and FS 75.00, BL 0.00, l/2-in. aircraft black letters.	CONTROLS ACCESS
6	Both sides of fuselage at FS 147.00, WL 13500 1/4-in. aircraft black letters.	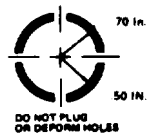
7	Both sides of fuselage, 2 on each side at FS 65.00 and FS 140.00 l/2-in. aircraft black letters and triangle.	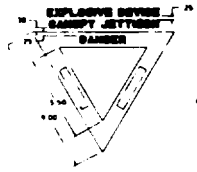 "DANGER" AIRCRAFT GREEN
8	Both sides of fuselage on access door on ammo chute fairing at FS 120.00, l/2-m aircraft black letters.	MOORING LUG ACCESS
9	Both avionics bays centered on doors, l/2-in. aircraft black letters.	AVONICS BAY
10	RH side of fuselage at ground service jacks, 2 places, FS 249.830, WL 129.640 and FS 189.470, WL 129.640. (See figure 7-12 for dimensions (MIL-C-83413/9-2).	
11	RH side of fuselage above access panel at FS 155.00, WL 136.00, 1/2-in. aircraft black letters.	REFUEL CONTROL PANEL

Figure 9-5. Exterior and Interior Makings, AH-64 (Sheet 12 of 19)

CODEI No.	DIRECTIONS	WORDING
12	RH side of fuselage at canopy handles, aircraft black.	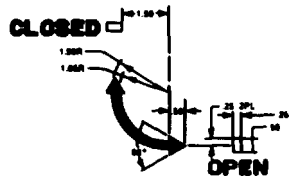
13	Inside pilots's cockpit, RH side, on fwd side of CPG hold-open device, l/2-in. aircraft black letters.	NO HOLD
14	RH side of fuselage on access door on ammo chute fairing at FS 155.00, l/2-in. aircraft black letters.	FIRE EXTINGUISHER INSIDE
15	RH side of fuselage at fwd fuel filler cap. l/2-in. aircraft black letters.	GRAVITY FUEL FILLER CAPACITY 155 U.S. GAL.
16	Both sides of fuselage at FS 40.00 with arrow pointing toward hatch on centerline, aircraft black.	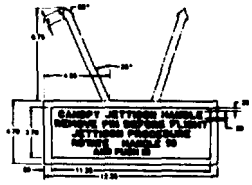
17	1. Centered on BL0.000 on doghouse faking assembly at FS 168.00 1/2-in, aircraft black letters. 2. Left of BL0.000, lower fuselage surface fwd of antenna at FS 468.00 1/2-in. aircraft black letters.	IFF TRANSPONDER
18	See item 16 above	
19	Both sides of fuselage on transmission access door, 1/2-in. aircraft black letters.	MAIN TRANSMISSION OIL LEVEL SIGHT GAUGE INSIDE
20	RH side of fuselage, above aft fuel drain valve and below fwd fuel drain valve, l/2-in. aircraft black letters.	FUEL SUMP DRAIN CONTROL
21	Both sides aft FABs at FS 195.8& WL 123.65, l/2-in. aircraft black letters.	INERTING SYSTEM VENT INSIDE

Figure 9-5. Exterior and Interior Markings, AH-64 (Sheet 13 of 19)

CODE NO.	DIRECTIONS	WORDING
22	Fwd fuselage lower surface on access hatch FS 65.00, l/2-in. aircraft black letters.	CYCLIC STICK ACCESS
23	Bottom of fuselage, fwd of jack pads, 3 places; at FS 120.00(2 places) and FS 450.00 (1 place). 1/2-in. aircraft black letters.	JACK PAD
24	RH side of fuselage below drain at FS 312.00, WL 116.20, l/2-in. aircraft black letters.	HVDRALIC OVERFOLW DRAIN
25	Fuselage lower surface on access panels at FS 170,00 and FS 255.00, l/2-in. aircraft black letters.	FUEL DUMP VALVE
26	LH side of fuselage on transmission access door. l/2-in. aircraft black letters.	HYDRAULIC RESERVOIR OIL LEVEL SIGHT GAUGE INSIDE
27	Bottom aftside of firewall, both nacelles. l/2-in, aircraft black letters.	ENGINE OIL LEVEL SIGHT GAUGE SERVICE ENGINE WITH MIL-L-23699 OR MIL-L-7808 OIL
28	Both nacelles, interior surface of engine fire doors below hinges. Readable when door is open. l/2-in. aircraft black letters.	WORK PLATFORM LOAD LIMIT 400 POUNDS
29	Both nacelles on engine fire doors. l/2-in. aircraft black letters.	ENGINE FIRE DOORS
30	Both nacelles on engine exhaust fairing. l/2-in. aircraft black letters.	DANGER – ENGINE EXHAUST
31	Beside ECU exhaust outlet, LH side. 1/2.in. aircraft black letters.	DANGER – ECU EXHAUST
32	LH side of fuselage at FS 257.00 and WL 148.50. l/2-in. aircraft black letters.	FIRE EXTINGUISHER DISCHARGE DISK
33	Both sides of fuselage near trailing edge of wing. l/2-in. aircraft black letters.	CAUTION – DISCONNECT HYD. ELECTRICAL & PITOT CONNECTORS BEFORE REMOVING WING
34	Beside APU exhaust duct, RH side. 1/2-in. aircraft black letters.	DANGER – APU EXHAUST

Figure 9-5, Exterior and Interior Markings, AH-64 (Sheet 14 of 19)

COD] NO.	DIRECTIONS	WORDING
35	Delete	
36	RH side o fuselage on transmission access panel at FS 200.00, WL 175,001/2-in. aircraft black letters.	TRANSMISSION OIL FILLER SPOUT INSIDE SERVICE TRANSMISSION WITH MIL-L-23699 OR MIL-L-7808 OIL
37	RH side of fuselage, below exhaust port at FS 202.00, WL 132.00. l/2-in. aircraft black letters.	TRANSFER PUMP EXHAUST
38	RH side of fuselage, fwd of drain atFS211.00, WL 116.00 1/2-in. aircraft black letters.	TRANSFER PUMP DRAIN
39	Underside of fuselage, fwd of drain at FS 278.00, RBL 6.00. l/2-in. aircraft black letters.	FUEL BOOST PUMP DRAIN
	RH side of fuselage at aft fuel filler cap. 1/2in. aircraft black letters.	GRAVITY FUEL FILLER CAPACITY 220 U.S. GAL.
41	RH side of fuselage below exhaust port at FS 278.00. l/2-in. aircraft black letters.	DANGER - FUEL PUMP EXHAUST PORT
42	LH side of doppler fairing at FS 315.00, top of letters at WL 104.00.	RADAR ALTIMETER RECEIVER ANTENNA
43	RH side of fuselage on access door. l/2-in. aircraft black letters.	AFT AVIONICS BAY
44	Aft surface of main rotor mast Wing. l/2-in. aircraft black letters.	AIR PARTICLE SEPARATOR EXHAUST
45	Both engine nacelles. 2-in. aircraft black bands.	
46	Aft surface of main rotor mast doghouse faking. l/2-in. aircraft black letters.	SURGE VALVE EXHAUST
47	Letters centerd aft of vent in ammo bay door at FS 180.00, LBL 20.00 and at FS 281.00, LBL 2.00.	FUEL VENT

Figure 9-5. Exterior and Interior Markings, AH-54 (Sheet 15 of 19)

CODE NO.	DIRECTIONS	WORDING
48	Top of doghouse fairing, LH side of antenna housing, FS 158.00. l/2-in. aircraft black letters.	RADAR JAMMER RCVR ANTENNA
49	Bottom of RH nacelle, adjacent to sight gauge access door. 1/2-in. aircraft black letters.	APU GEARRBOX OIL LEVEL SIGHT GAUGE SERVICE GEARBOX WITH MIL-L-23699 OR MIL-L.7608 OIL
50	Underside of both nacelles at FS 237.50, BL 26.00. 1/2-in. aircraft black letters	ENGINE DRAIN
51	Underside of RH nacelle at FS 273.40, BL 26.85. 1/2-in. aircraft black letters.	APU TURBINE PLENUM DRAIN
52	Both wingtips adjacent to access door. 1/2-in. aircraft black letters.	INTER-COMM RECEPTACLE
53	Underside of RH nacelle at FS 250.75, BL 26.50. l/2-in. aircraft black letters.	APU FUEL DRAIN
54	Underside of RH nacelle at FS 252.00, BL 26.85. l/2-in. aircraft black letters.	APU VENT
55	Upper surface of both wings, on access panel at BL 28.00. 1/2-in. aircraft black letters.	WING ACCESS
56	Both ammo bay doors, centered at FS 205.00, bottom of letters at W L 106.00, l/2-in. aircraft black letters.	AMMO BAY
57	Underside of both nacelles, on access panel at FS 225.00. 1/2-in. aircraft black letters.	WATER WASH ACCESS
58	Bottom of LH nacelle on access door. l/2-in. aircraft black letters.	GROUND AIR INPUT
59	Lower fuselage surface, centered aft of blade antenna at FS 355.00. 1/2-in. aircraft black letters.	VHF AM/FM NO. 2
60	Both sides of fuselage, most fwd letter (“U” left side, “Y” right side) at FS 271.00, tops of letters at WL 137.50, aircraft black letters	UNITED STATES ARMY 6 INCH HIGH 4 INCH WIDE DISTANCE BETWEEN LETTERS 1 INCH, DISTANCE BETWEEN WORDS 4 INCH.

Figure 9-5. Exterior and Interior Markings, AH-64 (Sheet 16 of 19)

CODE NO.	DIRECTIONS	WORDING
61	Both sides to tail cone, vertical stabilizer, and drive shaft fairing. 1/2-in. aircraft black letters.	NO PUSH
62	Both sides of vertical stabilizer at FS 560.00 and WL 240.00 in 1/2-in. aircraft black letters.	VHF AM/FM NO. 1
63	Both sides of tailboom, 2 in. fwd of tail cone separation. 1/2-in. aircraft black letters.	CAUTION — UNLOCK TAIL WHEEL BEFORE TOWING
64	Both sides of vertical stabilizer, most aft number start at FS 561.65, bottom of numbers at WL 178.1 in aircraft black letters. Numbers 6-in. high, 4-in. wide and 1-in. between letters.	(Radio Call Numbers)
65	LH side of aft fuselage, center of arrow at WL 133.00, point of arrow at FS 461.00. Aircraft black arrow and letters.	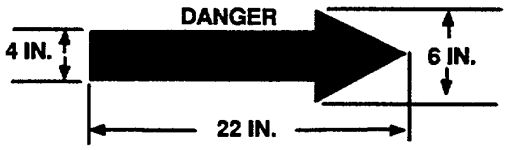
66	Lower fuselage surface aft of antenna at FS 426.1. 1/2-in. aircraft black letters.	RADAR WARNING BLADE
67	RH side of aft fuselage, center of arrow at WL 133.00, point of arrow at FS 461.00. Aircraft black arrow and letters.	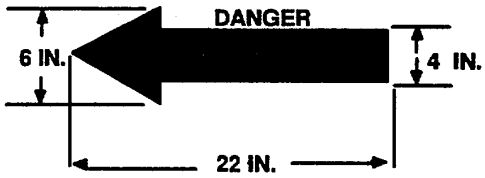
68	Interior surface of access door, oriented to be readable when door is in open position. 1/2-in. aircraft black letters	DO NOT OPERATE ROTOR OR APU WITH GSE CONNECTED
69	RH side of fuselage, on access door in aft fairing. 1/2-in. aircraft black letters.	HYDRAULIC GROUND SERVICE PANEL SERVICE HYD SYSTEM WITH MIL-H-5606 OR MIL-H-83282
70	LH side of doppler fairing at FS 330.00, top of letters at WL 104.00. 1/2-in. aircraft black letters.	DOPPLER RADAR

Figure 9-5. Exterior and Interior Markings, AH-64 (Sheet 17 of 19)

CODE NO.	DIRECTIONS	WORDING
71	LH side of doppler fairing at FS 345.00, top of letters WL 104.00. 1/2-in. aircraft black letters.	RADAR ALTIMETER XMTR ANTENNA
72	RH side of fuselage aft of access door at FS 344.00. 1/2-in. aircraft black letters.	EXTERNAL POWER CONNECTOR — 115VAC/DC 3PH 400HZ
73	Both sides of aft fairing upper surface. 1/2-in. aircraft black letters.	CAUTION — DISCONNECT ELECTRICAL CONNECTORS BEFORE REMOVING FAIRING
74	Lower fuselage surface aft on antenna fairing at FS 355.00. 1/2-in. aircraft black letters.	ADF LOOP ANTENNA
75	Lower fuselage surface aft on antenna fairing at FS 355.00. 1/2-in. aircraft black letters.	ADF SENSE ANTENNA
76	Lower fuselage surface aft on antenna fairing at FS 355.00. 1/2-in. aircraft black letters.	ADF AMPLIFIER IMPEDANCE MATCHING
77	Locate aft of drains at FS 133.36, LBL 1.60; FS 152.10, RBL 1.60; FS 245.47, RBL 1.60; FS 267.06, RBL 1.20. 1/2-in. aircraft black letters, 4 places.	FUEL DRAIN
78	Lower fuselage surface aft of antenna blade at FS 393.00. 1/2-in. aircraft black letters.	UHF/IFF TRANSPONDER
79	Locate on centerline of aircraft, top of nose at FS 39.00. 1/2-in. aircraft black letters and border.	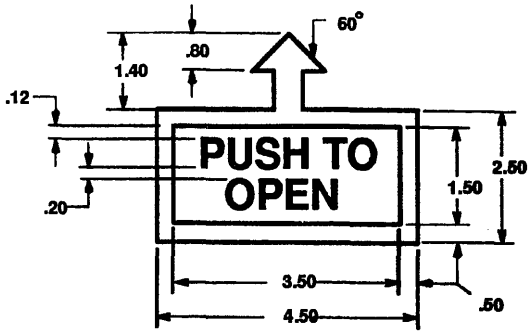

Figure 9-5. Exterior and Interior Markings, AH-64 (Sheet 18 of 20)

CODE NO.	DIRECTIONS	WORDING
80	Marking on pilot and co-pilot/gunner collective stick chop collar will have black letters on orange-yellow background.	
81	Forward upper corner of right hand ammo chute fairing at approximately FS 115.00 and WL 128.00. 1/2-in. aircraft black letters and border.	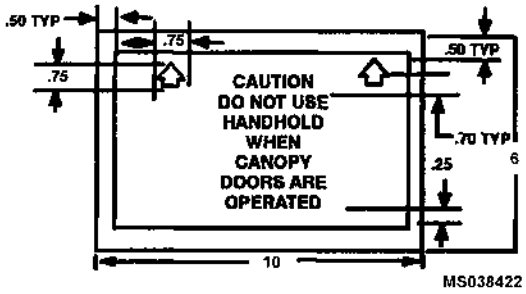

Figure 9-5. Exterior and Interior Markings, AH-64 (Sheet 19 of 20)

CODE NO.	DIRECTIONS	WORDING
82	RH underside at FS 87.00 adjacent to access door, 1/2-in. aircraft black letters.	UTILITY LIGHT & GROUND POWER RECEPTACLE
83	LH side and RH side of fuselage at WL 114.87, FS 220.62 (one marking under both drains) 1/2-in. black letters.	TRANSMISSION DRAINS
84	On underside of both nacelles, outboard of drain LBL 26.50, FS 245.00 and RBL 26.50, FS 244.50. 1/2-in. aircraft black letters.	COMBUSTOR DRAIN
85	RH side of fuselage at WL 114.44, and FS 223.65. 1/2-in. aircraft black letters.	AIR SEPARATOR DRAIN
86	On RH side of fuselage at WL 114.50, FS 228.12. 1/2-in. aircraft black letters.	APU PUMP DRAIN
87	LH side of canopy at FS 103.00 below Code 89, 1/4-in. aircraft black letters. WP -Indicates wash primer used P -Indicates primer used L -Indicates lacquer used (if required) C -Indicates coating used (if required)	
88	LH side of canopy at FS 105.00 above Code 2. 1/4-in. aircraft black letters. **NOTE** Date shown on stencil is date aircraft painted with MIL-DTL-64159 or MIL-DTL-53039 paint.	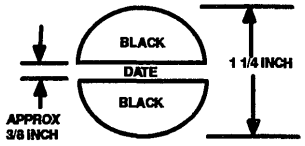
89	On LH side of canopy at FS 103.50 below Code 2. 1/2 in. aircraft black letters.	SERVICE THIS AIRCRAFT WITH MIL-T-83133 GRADE JP8 AVIATION FUEL. IF NOT AVAILABLE, REFER TO TB 55-9150-200-24 FOR ALTERNATE FUEL.
90	On underside of LH and RH wing assembly, centered on WG STA 31.570 with arrow pointing inboard towards ground service jack. Arrow tip should end 1-in from ground service jack (BL 66.540). Aircraft black letters.	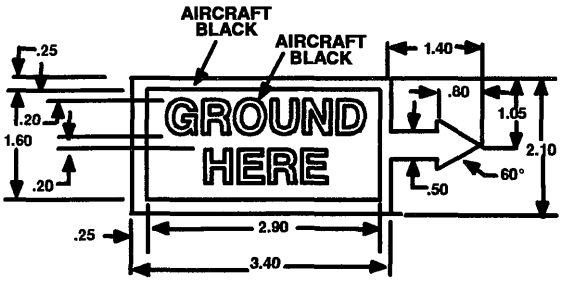
91	LH and RH wings upper surface at FS 228.00, BL 28.00. 1/2-in. aircraft black letters.	AUX FUEL SYSTEM QUICK DISCONNECT

Figure 9-5. Exterior and Interior Markings, AH-64 (Sheet 20 of 20)

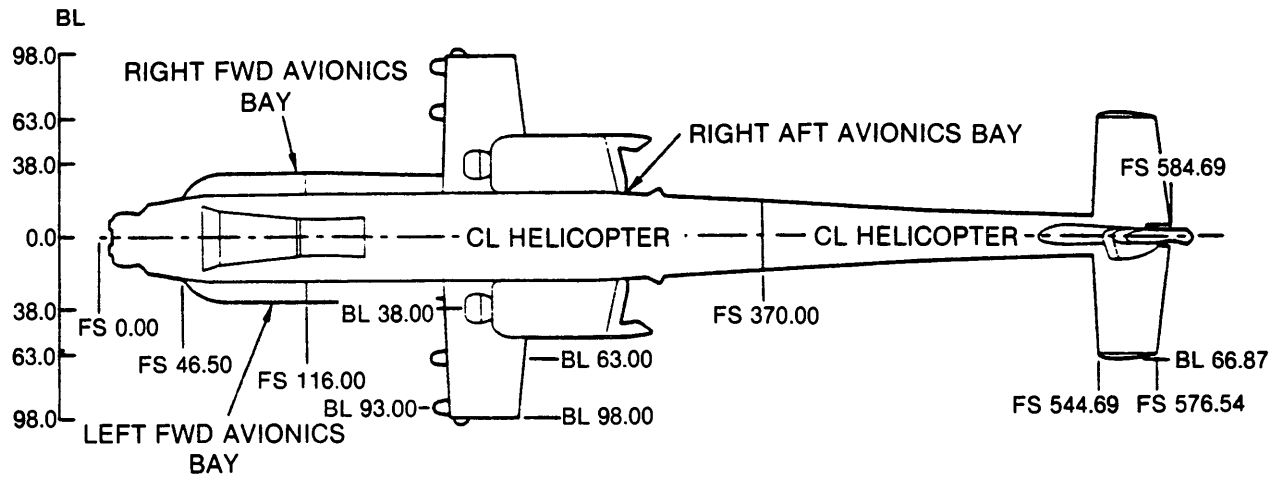

ALL DIMENSIONS ARE IN INCHES

BL BUTTLINE

CL CENTERLINE

FS FUSELAGE STATION

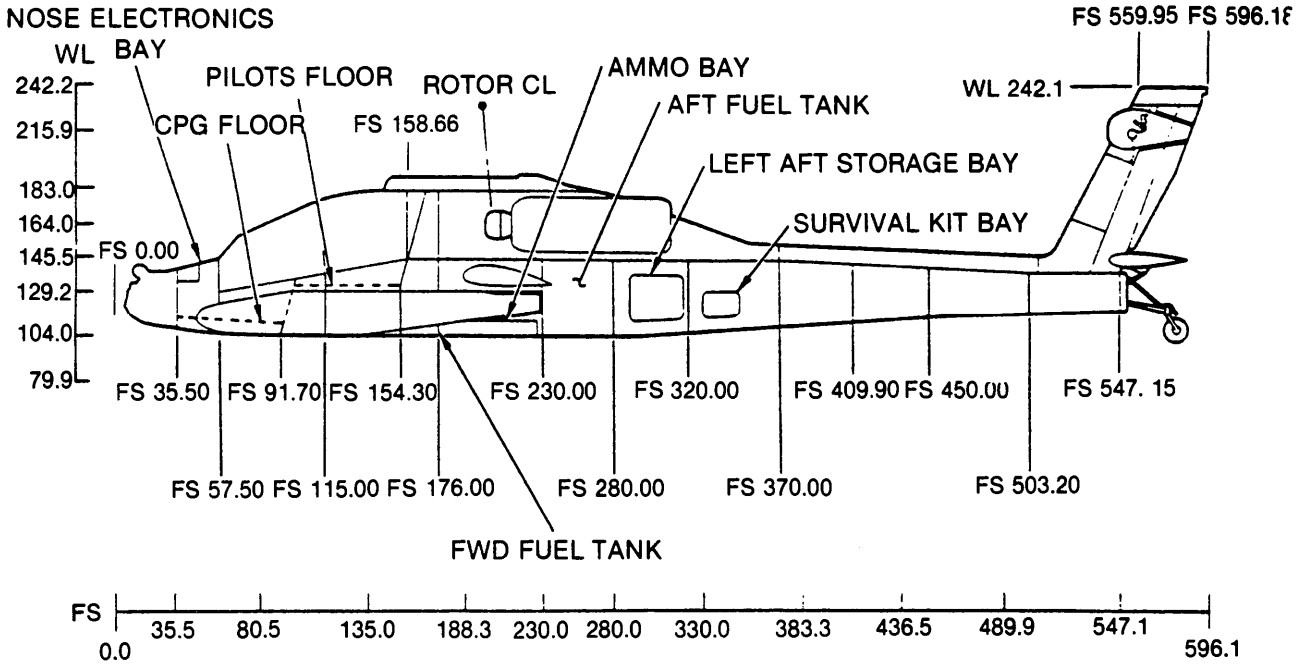

Figure 9-6. Station Diagram, AH-64

SECTION III CH-47 ILLUSTRATIONS

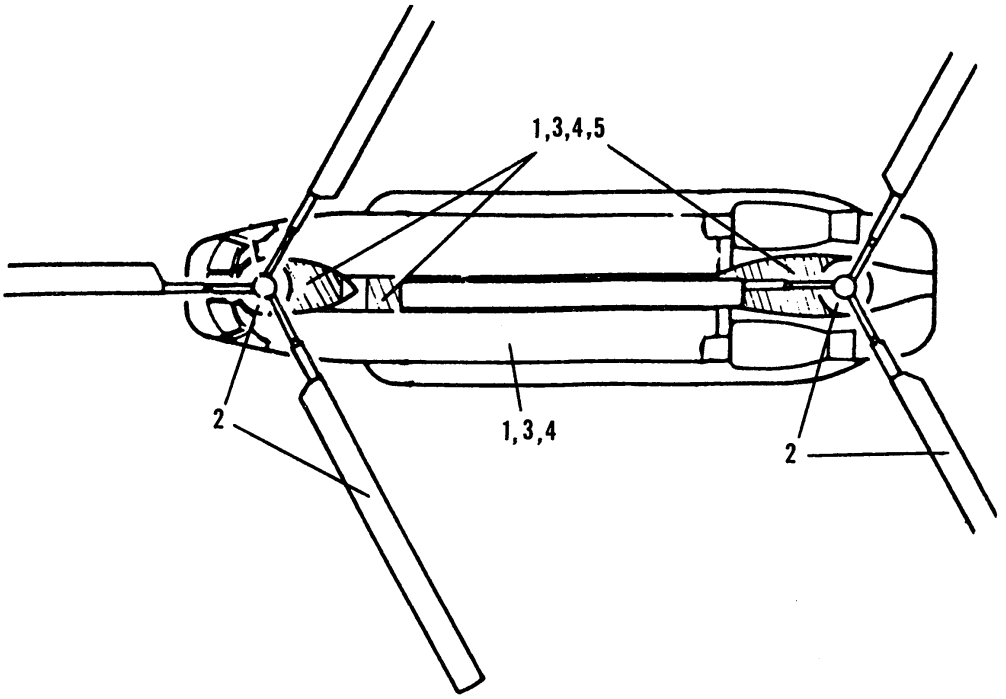

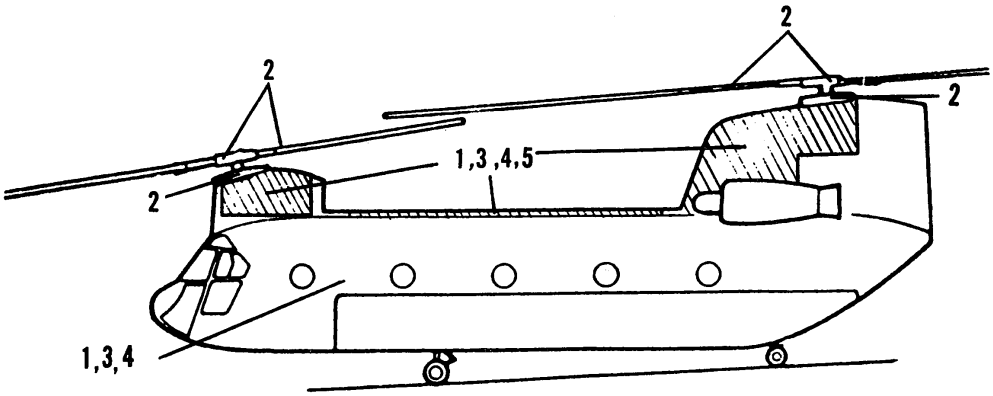

1. MIL-DTL-64159 or MIL-DTL-53039, Aircraft Green (entire aircraft, except as noted).
2. MIL-DTL-64159 or MIL-DTL-53039, Aircraft Black.
3. MIL-DTL-64159 or MIL-DTL-53039, Dark Sand (entire aircraft or high conspicuous paint scheme when authorized, desert operations only). See Paragraph 5-11.
4. MIL-DTL-64159 or MIL-DTL-53039, Aircraft White (entire aircraft or high conspicuous paint scheme when authorized, arctic operations only). See Paragraph 5-11.
5. MIL-P-21600, Fluorescent Red-Orange. ANA #633 (training aircraft-high visibility, only where authorized).

Figure 9-7. Tactical Paint Scheme. CH-47

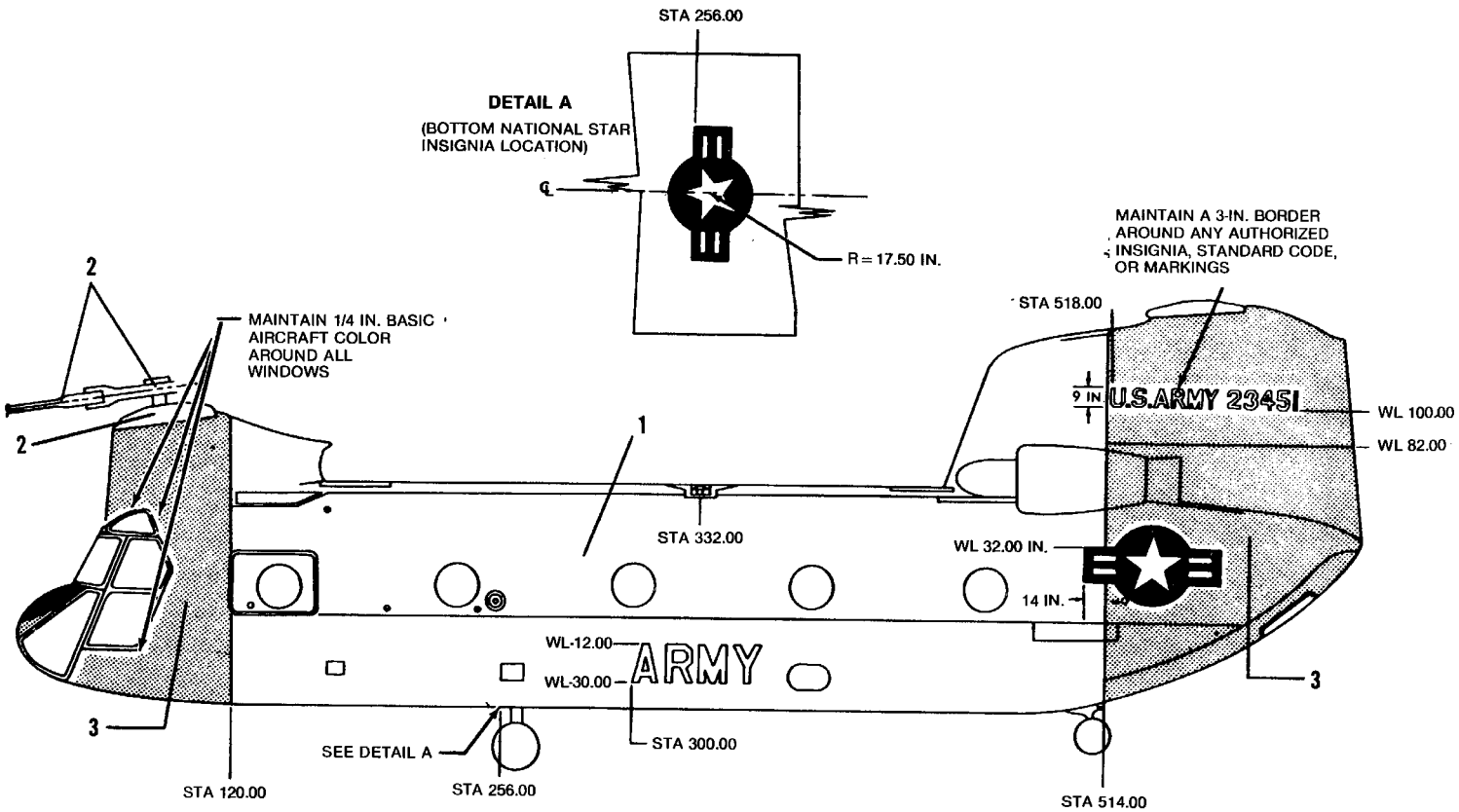

1. MIL-DTL-64159 or MIL-DTL-53039, aircraft green (entire aircraft, except where noted).
2. MIL-DTL-64159 or MIL-DTL-53039, aircraft black.
3. MIL-P-21600, .uorescent red-orange, ANA #633 (shaded areas only).

Figure 9-8. Non-Tactical Arctic/Desert Paint Scheme, CH-47

NOTE

ENTIRE INTERIOR OF HELICOPTER TO BE INTERIOR AIRCRAFT GRAY, EXCEPT SURFACES ABOVE WATERLINE PLUS 29.0 TO BE APPLICABLE PRIMER COLOR ONLY.

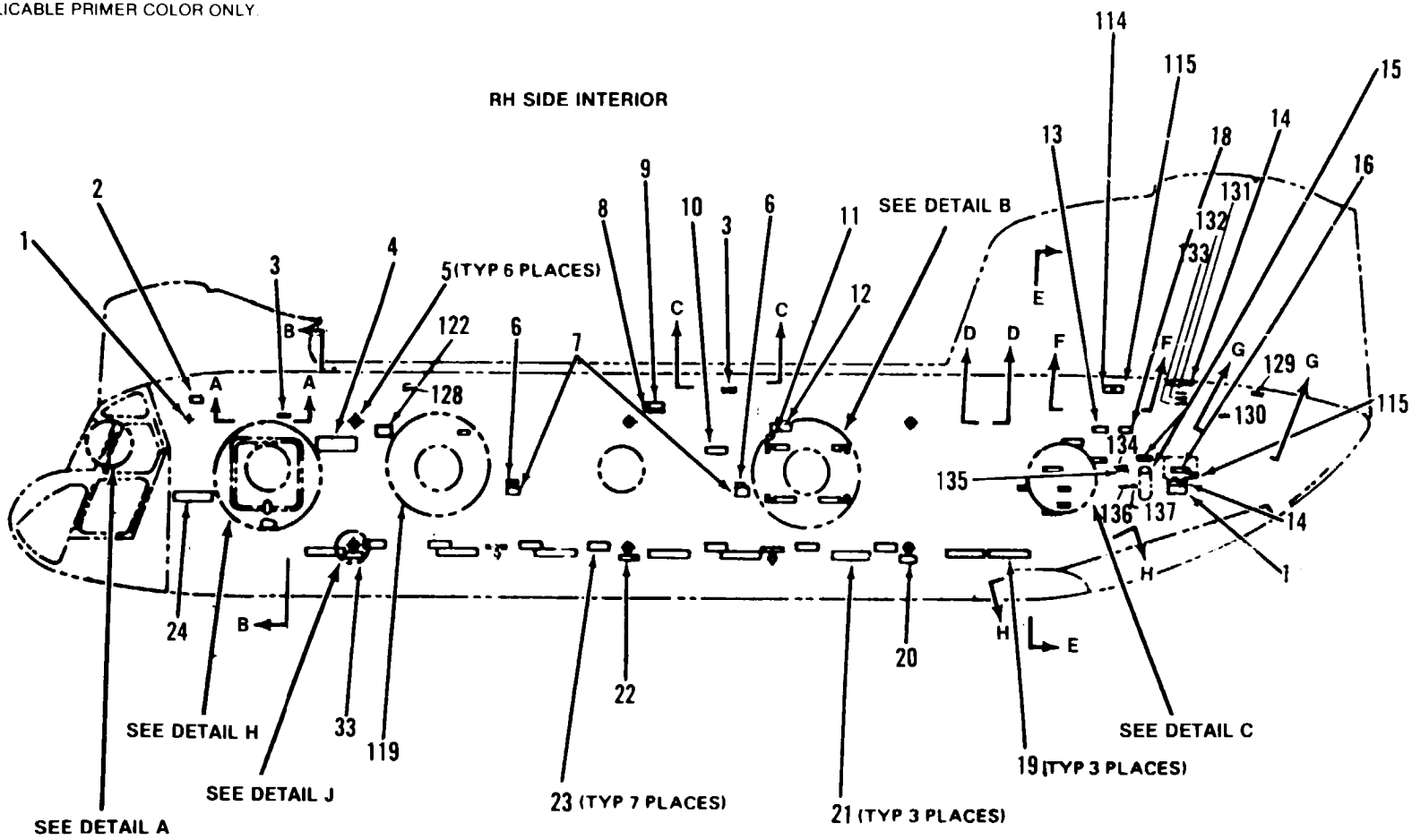

Figure 9–9. Interior Markings, CH-47 (Sheet 1 of 20)

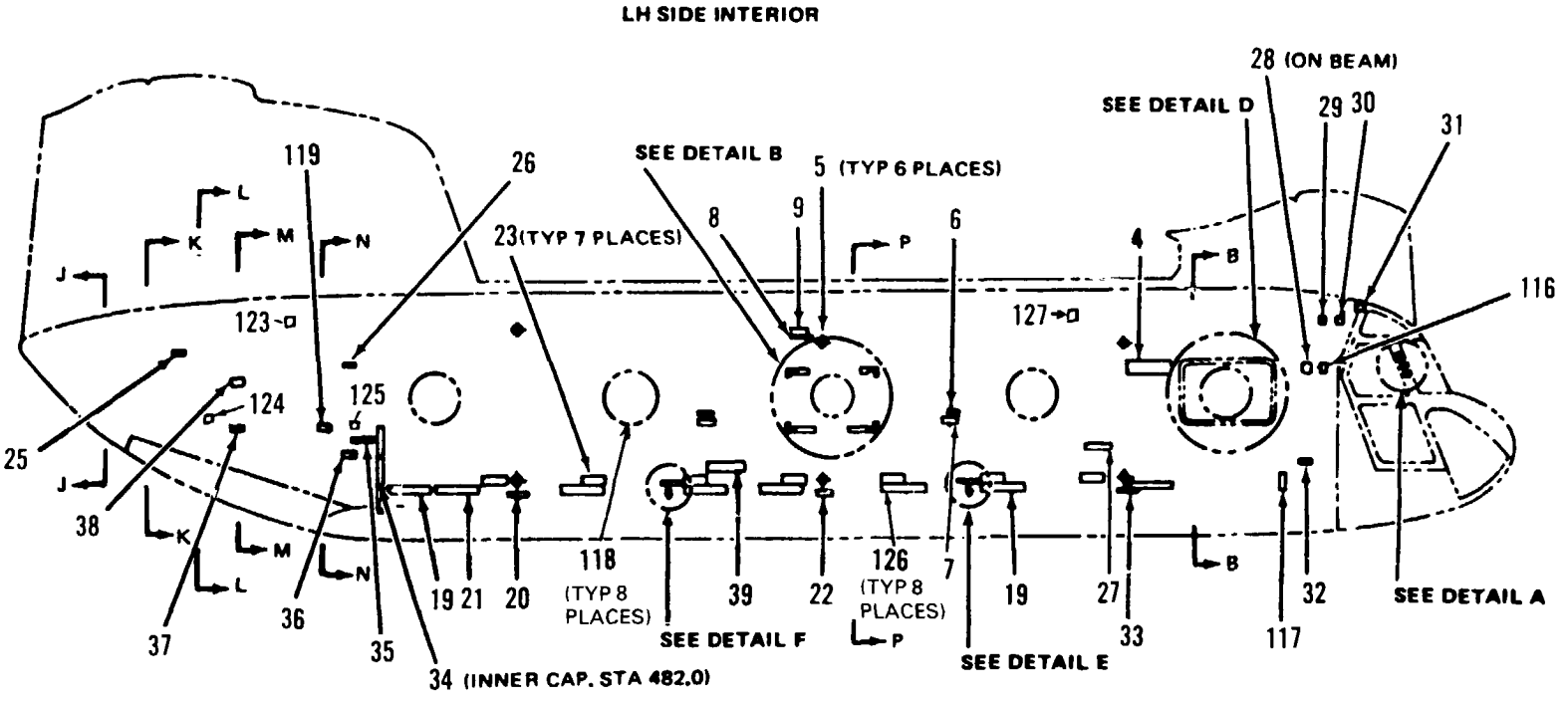

Figure 9–9. Interior Markings, CH-47 (Sheet 2 of 20)

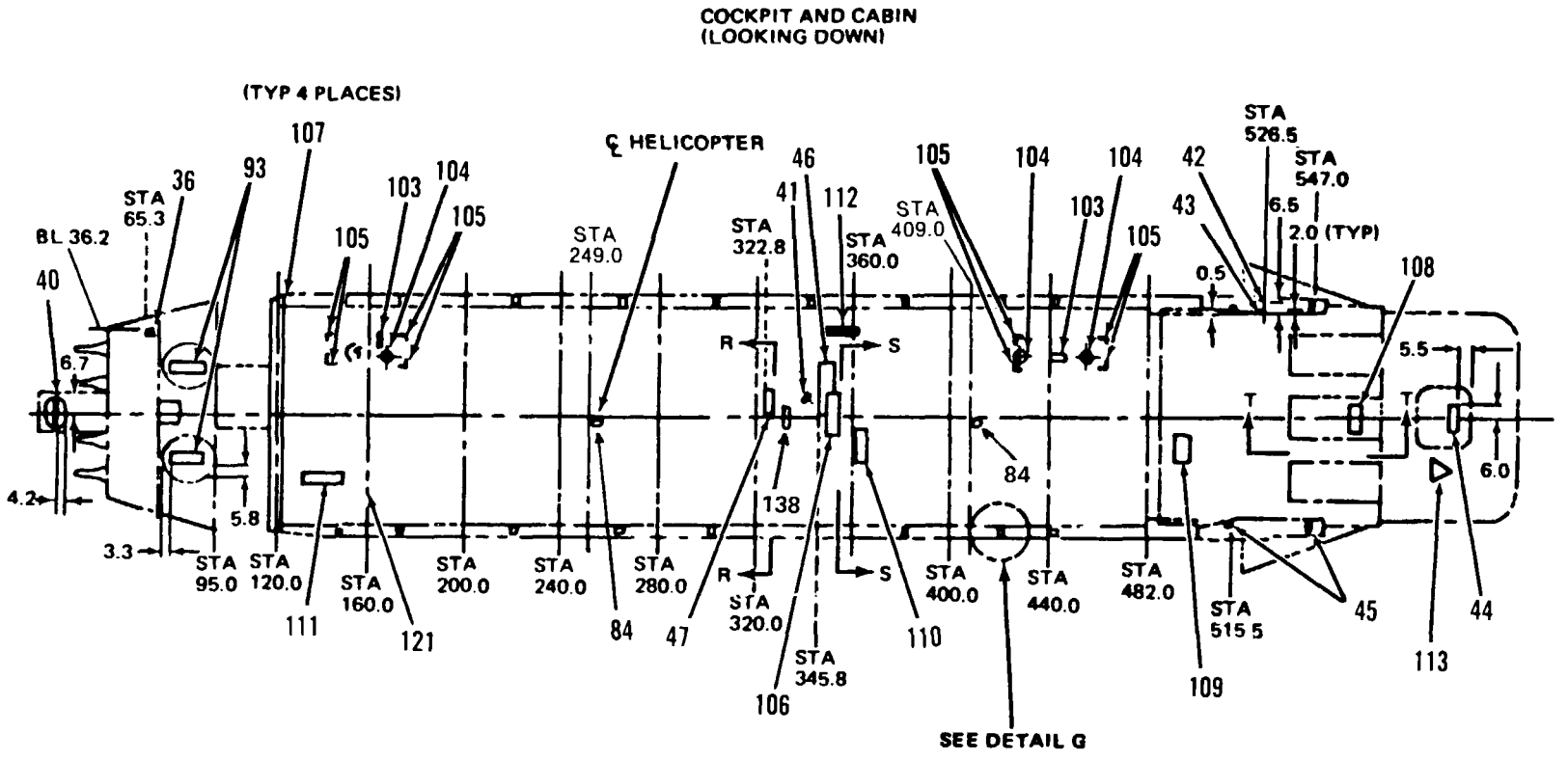

Figure 9–9. Interior Markings, CH-47 (Sheet 3 of 20)

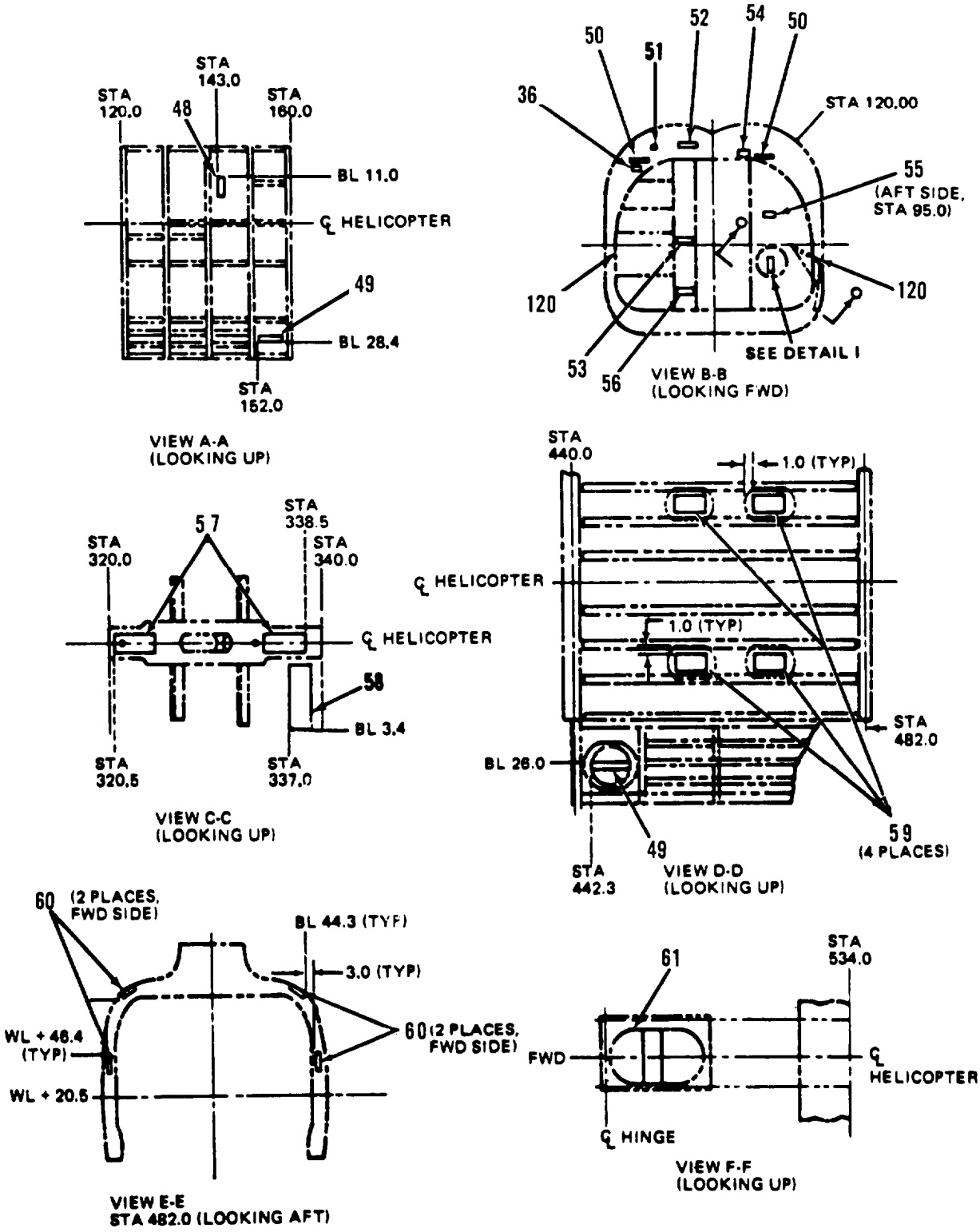

Figure 9–9. Interior Markings, CH-47 (Sheet 4 of 20)

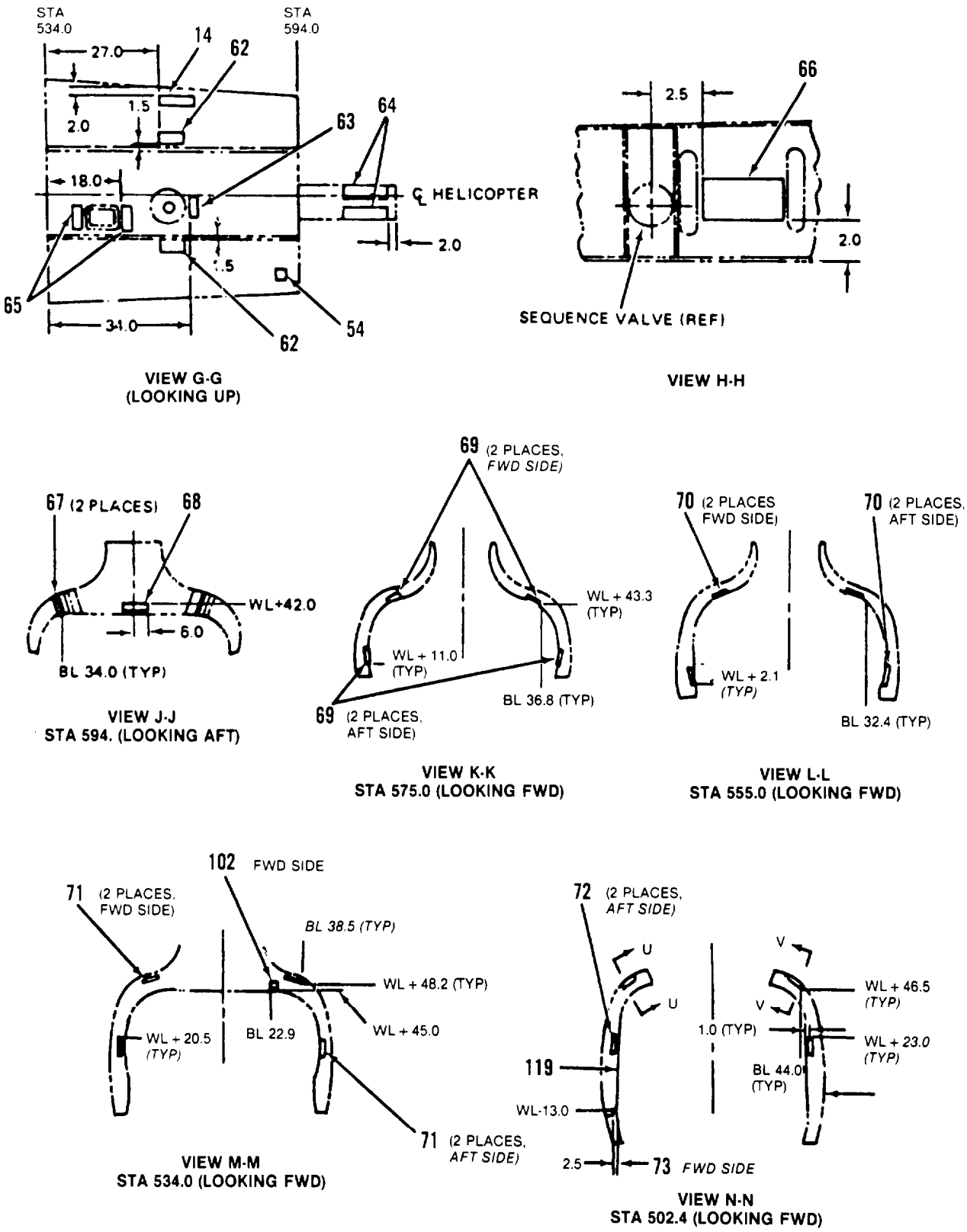

Figure 9–9. Interior Markings, CH-47 (Sheet 5 of 20)

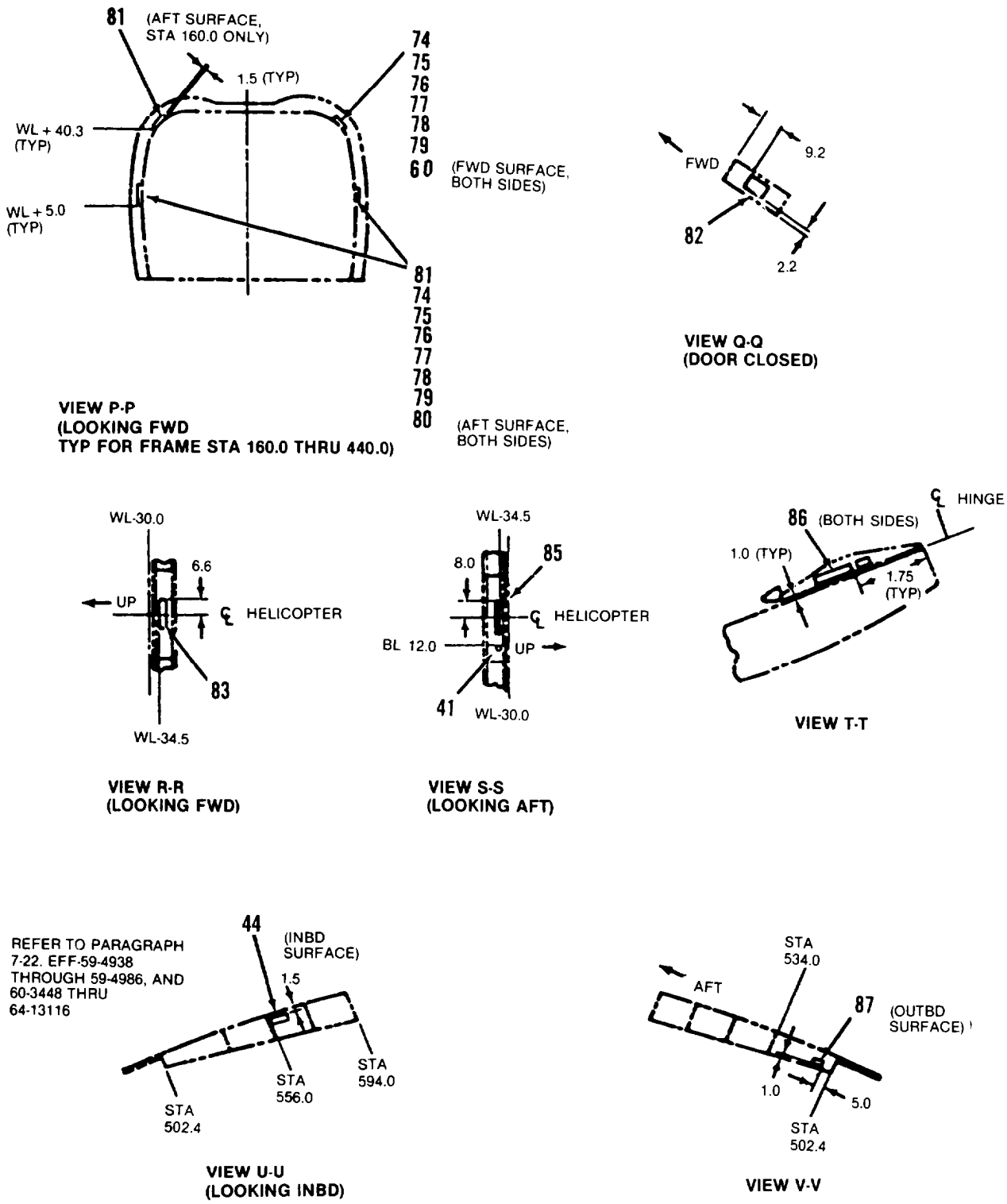

Figure 9–9. Interior Markings, CH-47 (Sheet 6 of 20)

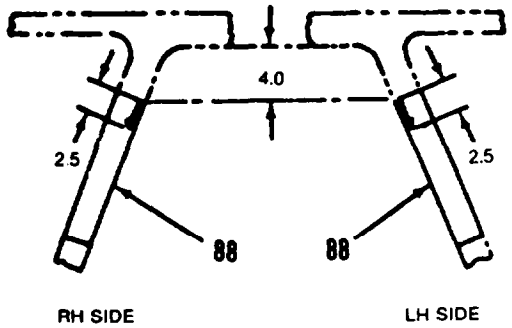

DETAIL A

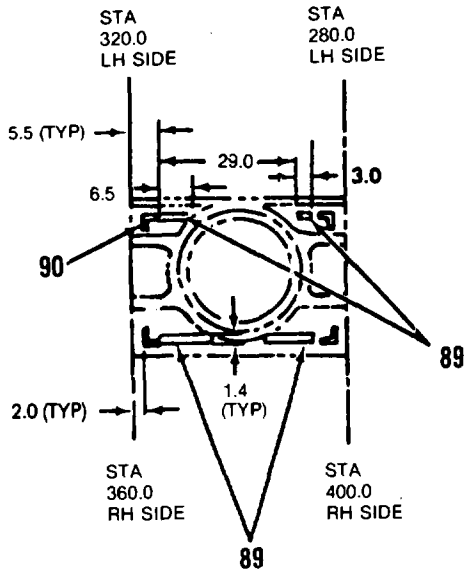

DETAIL B
(LOOKING OUTBD)

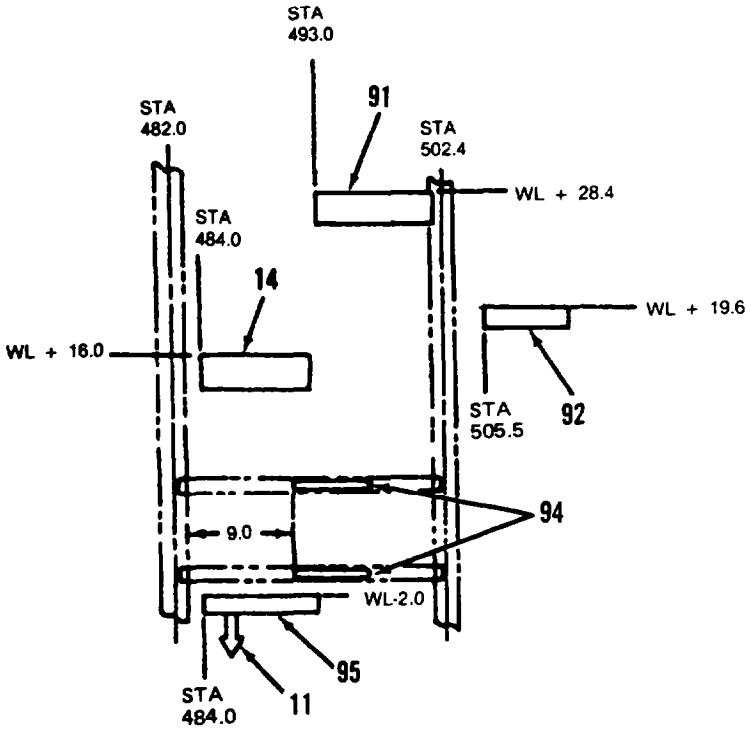

DETAIL C

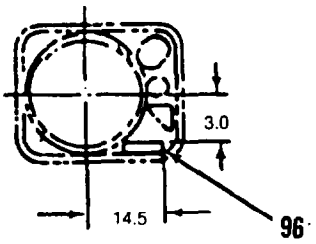

DETAIL D
(LOOKING OUTBD)

Figure 9–9. Interior Markings, CH-47 (Sheet 7 of 20)

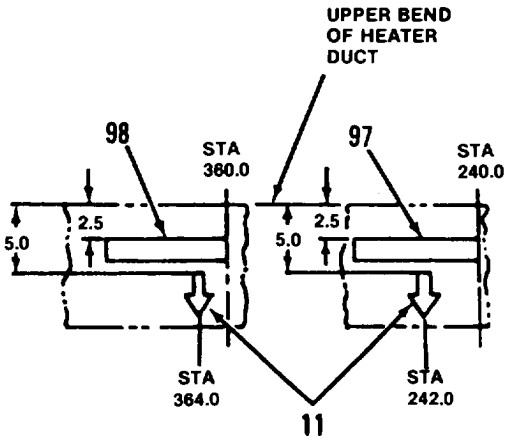

DETAIL F
(TYP LH AND RH SIDES)

DETAIL E
(TYP LH AND RH SIDES)

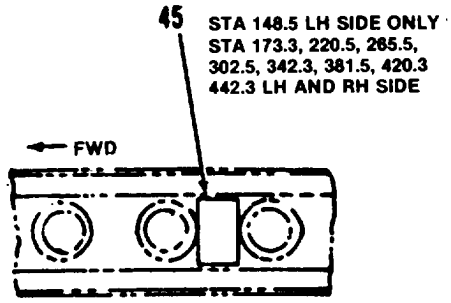

DETAIL G

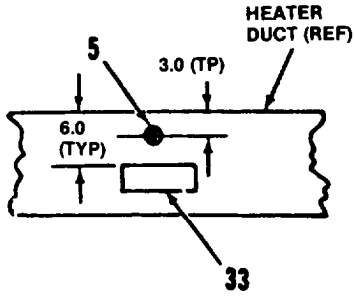

DETAIL J

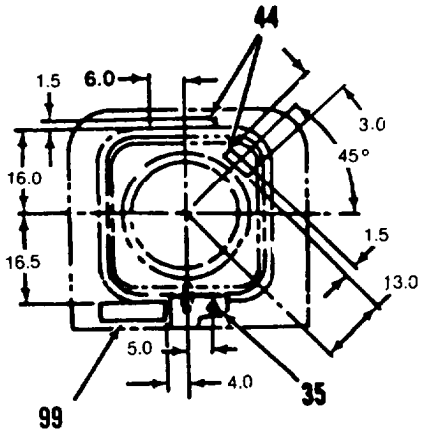

DETAIL H
(LOOKING OUTBD)

REFER TO PARAGRAPHS
7-19 THROUGH 7-22.

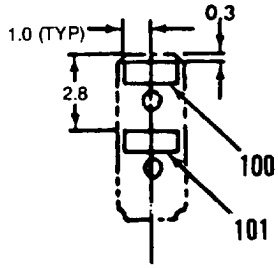

DETAIL I

Figure 9–9. Interior Markings, CH-47 (Sheet 8 of 20)

CODE NO.	DIRECTIONS	WORDING
1	Left side of fuselage at station 106.5, WL 32.5.3 in. MIL-DTL-64159 or MIL-DTL-53039, aircraft white, No. 37875, circle with 1-in. MIL-DTL-64159 or MIL-DTL-53039, aircraft red, No. 31136, cross.	
2	Left side of fuselage at station 106.5, WL 45.2. 1/2-in. white letters.	NO 2 CONTROL SYSTEM FILTER
3	Right side, sta 157, above door 1/2-in. white letters.	LEVELING BRACKET
4	Both sides, station 163.5, WL 27.6. 1-in. white letters.	MAX CONCENTRATED FLOOR LOADING FWD OF STA 160.0 NOT TO EXCEED 1000 LBS CONCENTRATED LOAD.
5	Both sides of fuselage centered on station 181, 303, 425 at WL 35.0.3 in. MIL-DTL-64159 or MIL-DTL-53039, aircraft black, No. 37038 and MIL-DTL-64159 or MIL-DTL-53039, aircraft white, No. 37875. See Detail J for type.	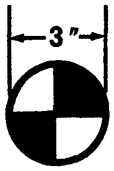
6	Both sides of fuselage. Station 249 and 348 at WL 8.0 1-in white letters.	UT RECP
7	Both sides of fuselage at station 249 and 348 at WL 6.0 1/2-in white letters.	28VDC AMPS: 1 = 15A 2 = 7.5A 3 = 5A
8	Both sides of fuselage at station 317. WL 44.9. 1/2' white letters.	115V, 3PH, 400CY, 15AMP
8	CH-47D, both sides of fuselage at station 317, WL 44.9, 1/2-in. white letters.	115V, 1PH, 15AMP 115V, 3PH, 15AMP
9	Both sides of fuselage at station 317.0, WL 41.9. 1' white letters.	MISSILE HEAT PLUG
9	CH-47D, both sides of fuselage at station 317.0, WL 41.9, 1-in white letters.	400 CYCLE AC UTILITY RECEPTACLE
10	Right side of fuselage at station 335.0, WL 23.9. 1-in. white letters	HOIST OPER STATION
11	Arrow white 1/2-in. X 3 in. See Detail C, E and F.	
12	Right side of fuselage. Station 363.3, WL 37.1. 1-in. white letters.	HOIST OPER ATTACH.
13	Right side of fuselage at station 506, WL 36.0. 1/2-in. white letters.	RAMP MANUAL OVERRIDE

Figure 9-9. Interior Markings, CH-47 (Sheet 9 of 20)

CODE NO.	DIRECTIONS	WORDING
14	See View G-G, and Detail C, station 549.3, WL 53.0; station 538.8 WL 8.5. 1/2" white letters **NOTE** 5 req'd on S/N 59-4983 thru 66-19028. 4 req'd on S/N 66-19029 and subsequent.	ACCUMULATOR CHARGE 1400 PSI—AIR OR NITROGEN
15	Station 525, WL 22.5. Right side of fuselage. Finish half of .ller cap, orange; the other half MIL-DTL-64159 or MIL-DTL-53039, aircraft gray interior, No. 36231	FILLER UTILITY TANK
16	Right side of fuselage, station 550, WL 33.5. 1/2" white letters. Eff. on CH-47 S/N 65-7978 and subsequent.	UTILITY RETURN FILTER
17	Right side of fuselage, station 538.8, WL 8.5. 1/2" white letters.	INITIAL 1800 PSI CHARGE REQ'D FOR -65°F OPERATION
18	Right side of fuselage, station 517.5, WL 36. 1/2 in. white letters.	UTILITY PRESSURE FILTER
19	Both sides of fuselage. Two places, station 220, 391 and 460. WL-21.5. 1" white letters. Arrow is 1" X 3". 3 places on heater dust on each side.	**10000 LB TIE DOWN** **HERE ONLY** ↓
20	Both sides of fuselage. Centered on station 425. WL -21.5. 1/2" white letters. Eff on S/N 64-13117 thru 65-7977. S/N 56-7978 and subsequent.	CARGO E STA 425 CAP 15250 LBS. CAP 22875 LBS.
21	Both sides of fuselage, station 160, 225 and 438. WL -21.5. 1" white letters.	ALL TIE DOWN RINGS 500 LBS UNLESS NOTED
21	CH-47D, Both sides of fuselage, station 160, 225, and 438, WL -21.5, 1" white letters.	ALL TIE DOWN RINGS 5000 LBS UNLESS NOTED
22	Both sides of fuselage. Station 306.8 WL -21.5 White letters. Eff S/N 64-13117 thru 65-7977. S/N 65-7978 and subsequent.	CARGO D STA 303 CAP 15250 LBS. *CAP 22875 LBS.
23	Both sides of fuselage at 14 places at heater outlets. 1st line 1" letters. Remainder 1/2" letters (white).	**HEAT AND VENT** **LOOSEN SCREW TO ADJUST SLIDE** **OPEN** ⟷ **CLOSED**
24	Right side of fuselgae on beam. BL 18 beam 1" white letters	TO STOW SEAT-FOLD BACK FWD & SECURE WITH STRAP — FOLD DOWN SEAT

Figure 9-9. Interior Markings, CH-47 (Sheet 10 of 20)

CODE NO.	DIRECTIONS	WORDING
25	Left side of fuselage at station 561. WL 33.4, 1/2” white letters	**MIRROR STOWAGE**
26	Left side of fuselage station 492. WL 28.4. First line, 1/2” letters. Second line, 1/4” letters, white	**FUEL VALVE NO 1 ENGINE** **← OPEN CLOSE →**
27	Left side of fuselage. Station 198, WL-6.3. 1” white letters.	**DO NOT COVER AIR INLET**
28	Left side of fueselage. Station 106. WL26.0. 1/4” white letters, mount on 114S1610, BL 8.0 beam. Eff on S/N 59-4983 thru 65-7989	**TORQUE MTG BOLTS FOR 114CS101 and 114CS103 TO** **40 $^{-0}_{+4}$ in. lbs.**
	Eff on: S/N 65-7990 and subsequent, except CH-47D	**TORQUE MTG BOLTS FOR 114CS101 and 114CS117 T0** **40 $^{-0}_{+4}$ in. lbs.**
29	Left side of fuselage. Station 100.0. WL 45.2. 1/2” white letters. CH-47A, B and C only.	**NO 1** **SAS FILTER**
30	Left side of fuselage, station 94.0, WL 45.2. 1/2” white letters. CH-47A, B and C only.	**NO 2** **SAS FILTER**
31	Left side of fuselage. Station 85.0. WL 50.8. 1/2” white letters.	**NO 1 CONTROL** **SYSTEM FILTER**
32	Left side of fuselage. Station 106.0, WL 13.5. I/2-in. white letters.	**PITOT AND STATIC DRAINS**
33	See Detail J. Station 184, on heater duct. 1st line, 1” letters, remainder 1/2 letters, white, eff on S/N 64-13117 thru 65-7977	**CARGO C** **STA 181** **CAP 15250 LBS**
	Eff on S/N 65-7978 and subsequent.	**CARGO C** **STA 181** **CAP 22875 LBS**
34	1/2 wide black and aircraft white stripes, vertical on station 482 from WL-9.0 to WL-21.5. Eff on S/N 62-2114 and subsequent.	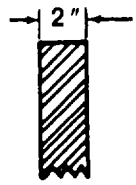

Figure 9–9. Interior Markings, CH-47 (Sheet 11 of 20)

CODE NO.	DIRECTIONS	WORDING
35	Left side of fuselage centered on station 486 and WL-2.0.1” white letters.	**STA 486**
36	3 places in fuslage. 1” black letters on orange-yellow background. Station 492, WL -6.5, BL37.0, WL38.7, View B—B.	**FIRE EXIT**
37	Left side of fuselage, station 537, WL + 3.5. 1/2” white letters. Eff on S/N 59-4982 thru 65-7977 Eff on S/N 65-7978 and subsequent	**J–2 COMPASS FLUX VALVE** **COMPASS FLUX VALVE**
38	Left side of fuselage, station 537, WL 22.2. 1st two lines 1/2”, last line 1/4” white.	**EMERGENCY APU FLUID SHUTOFF VALVE** **CLOSED** **OPEN**
39	Left side of fuselage, station 334.0, WL-12.0. 1” white letters.	**CRANK STOWAGE – RESCUE HATCH & RAMP MECH.**
40	Centered on door, 1/2” white letters	**ACCESS- PITOT AN D STATIC DRAIN LINES**
41	On floor, station 340 approx. Arrow 1/2” X 3.50 aircraft white on black, see View S-S.	
42	Right side, sta 526, 1/2” white letters.	**FILLING**
43	Right side, sta 526, 1/2” white letters.	**NORMAL**
44	Centered on rear door, first line 1”, remainder 1/2” orange-yellow, refer to View U—U and Detail H.	**EMERGENCY EXIT** **PULL STRAP OUT – PUSH PANEL**
45	Fig 8, Detail G, 1” white letters L.H. and R.H. side, station 173.3, 220.5, 265.5, 302.5, 342.3, 381.5, 420.3, and 442.3.	**W.L.** **O**
46	On lower door, station 345, 1” aircraft white letters.	**TURN LATCH TO UNLOCK & LOCK OUTER HATCH-CAUTION-UNLOCK BEFORE TURNING CRANK TO OPEN HATCH**
47	On lower door, station 322.1” aircraft white letters and arrow.	**UNLOCK**

Figure 9–9. Interior Markings, CH-47 (Sheet 12 of 20)

CODE NO.	DIRECTIONS	WORDING
48	View A—A, looking up, station 143 BL 11.0. 1/2" white letters.	STATIC LINE DRAIN
49	View A—A and D—D (looking up), station 152 and 442. 1/2" white letters.	CRANE ACCESS
50	View B—B, 1" white letters, sta 120.0, BL 38, WL 40.5, BL 28 WL 43.0.	STA 120.0
51	View B—B, 1/4" white letters, BL 25, WL 49.0.	TROOP WARNING SYSTEM
52	View B—B, 1/2" white letters, BL 15.5, WL 48.0.	RESCUE PULLEY ATTACH
53	View B—B 1" white letters station 120, BL 17, WL 3.9	LITTER POLE STORAGE
54	View B—B. 1" white letters sta 120, BL 12.0 WL 45.0. Eff on quantity of 1 ea S/N 65-7966-65-7977, Quantity of 2 ea, S/N 65-7978 and sub. Also station 594 (see View G—G).	ANCHOR LINE ATTACH.
55	View B—B, 1/4" white letters, station 95. BL 29.0, WL 15.5	CABIN LIGHT RELAYS RED WHITE
56	View B—B, 1" white letters Sta 120, BL 17.2, WL -20.	WINCH CABLE STOWAGE
57	View C—C (looking up). Center of helicopter, station 320 and 338. 1/4" white letters.	RESCUE CABLE CUTTER PULLEY ATTACH
58	View C—C (looking up), BL 8.4, station 337.0. 1/2" white letters.	CABLE CUTTER PLUG
59	View D—D (looking up), 1/2" white letters, 4 places.	ACCESS MIX BOX MOUNTING BOLTS
60	View E—E, 1" white letters, 4 places.	STA 482.0
61	View F—F (looking up), 1/2" white top center of fuselage, fwd of sta 534 on door.	ACCESS-SYNCH SHAFT THOMAS CPLG.
62	View G—G (looking up). 1/2" white letters. 2 places.	ACCESS XMSN UNLATCH DROP PANEL
63	View G—G (looking up). 1/2" white letters.	ACCESS — MAG PLUG

Figure 9-9. Interior Markings, CH-47 (Sheet 13 of 20)

CODE NO.	DIRECTIONS	WORDING
64	View G—G (looking up). 1" white letters, 2 places to be read from either side.	NO HANDHOLD
65	View G—G (looking up). 1/2" white letters, 2 places.	XMSN OIL LEVEL SIGHT GAGE VIEW PLATE
66	View H—H, 1/2" black letters.	SEQUENCE VALVE
67	View J—J, 1" white letters, station 594.0, left and right side.	STA 594.0
68	View J—J, 1" orange-yellow letters.	↑ DANGER HIGH VOLTAGE ↑
69	View K—K, 1" white letters, 4 places.	STA 575.0
70	View L—L, 1" white letters, 4 places.	STA 554.0
71	View M—M, 1" white letters, 4 places.	STA 534.0
72	View N—N, 1" white letters, 4 places.	STA 502.4
73	View N—N, 1/2" white letters.	HOIST CONTROL ↓
74	View P—P, 1" white letters, 4 places.	STA 200.0
75	View P—P, 1" white letters, 4 places.	STA 240.0
76	View P—P, 1" white letters, 4 places.	STA 280.0
77	View P—P, 1" white letters, 4 places.	STA 320.1
78	View P—P, 1" white letters, 4 places.	STA 360.0
79	View P—P, 1" white letters, 4 places.	STA 400.0
80	View P—P, 1" white letters, 4 places.	STA 440.0
81	View P—P, 1" white letters, 3 places.	STA 160.0
82	View Q—Q, 1" white letter stencil to be readable from centerline A/C with door closed. Mount to under surface of step.	PUSH TRIGGER TURN HANDLE UP PUSH DOOR OUT ↓
83	View R—R, 1" black letters. Center hook.	CARGO HOOK CAP 16000 LB. (CH-47A) CARGO HOOK CAP 20000 LB.(CH-47B/C) CARGO HOOK CAP 26000 LB. (CH-47D)

Figure 9-9. Interior Markings, CH-47 (Sheet 14 of 20)

CODE NO.	DIRECTIONS	WORDING
84	1 in. black letters.	CARGO HOOK CAP 20000 LB (CH-47D)
85	View S—S, 1" black letters.	HOOK STOWAGE STRAP
86	View T—T (ref Fig 9-9 (Sheet 6 of 20). 1/2" white letters. (Stencil to be readable when rotated into work platform position).	MAX. WEIGHT 200 LBS ON WORK PLATFORM
87	View V—V, .rst line, 1/2" white, second line, 1/4" white, station 502.4	**FUEL VALVE CROSS FEED** **← CLOSE OPEN →**
88	Detail A, first line 1" orange-yellow, second line 1/2 orange-yellow with arrow, 1/2" x 2-1/2" on black handles in cockpit. See arrow position in Detail A. For information on marking pilot and co-pilot doors, see paragraph 7-24.	**EMERGENCY EXIT** **→ TURN HANDLE**
89	Detail B, 1" orange-yellow letters, left side between station 280 and 320. Right side between station 360 and 400 place stencil on sides of window as shown. Refer to paragraph 7-22. **NOTE** Items 89 and 90 Eff on S/N 59-4983 thru 66-097.	**CUT HERE** 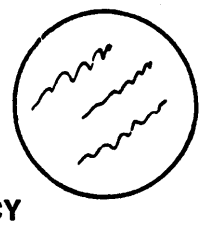 **FOR** **EMERGENCY** **RESCUE**
90	Detail B, cut out corners, 1" X 3" aircraft white as shown in item 89.	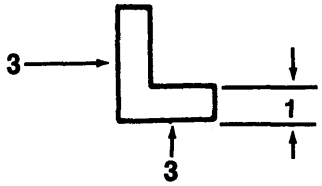
91	Detail C, Station 493, WL 28.4, first line 1/2" second line 1/4" white letters.	**FUEL VALVE NO. 2 ENGINE** **← CLOSE OPEN →**
92	Detail C, Station 505, WL 19.6, first line 1/2" second line 1/4" white letters.	**DEFUEL VALVE** **CLOSE ↙ OPEN ↗**
93	Two places aft of station 95, 1" white letters. Stencil to be readable from centerline of acft.	ACCESS PANELS — HYDRAULIC LINES, TRANSFORMERS

Figure 9-9. Interior Markings, CH-47 (Sheet 15 of 20)

CODE NO.	DIRECTIONS	WORDING
94	Detail C, 1/2" black letters, station 491. Top line on one stringer bottom line on lower stringer at WL 0.	UP STOP DN RAMP CONTROL
95	Detail C, 1" black, station 486, WL -2.0. Arrow 1/2" X 3".	**STA. 486.0** ↓
96	Detail D, 1/2" orange-yellow letters. Refer to paragraph 7-22.	EMERGENCY EXIT PULL STRAP OUT PUSH PANEL
97	Detail E, 1" white letters with arrow. Arrow located on Station 242.	**STA. 242.0** ↓
98	Detail F, 1" white letters. Arrow located on station 364.	STA. 364.0
99	Detail H, 1" white letters. Right side at fwd door.	TURN HANDLE UP LIFT DOOR
100	Detail I, View B—B, aft side, station 95.0, 1/4" white letters.	CABLE CUTTER
101	Detail I, and View B—B, aft side, station 95.0, 1/4" white letters.	HOIST CONTROL
102	View M—M, 1/2" white fwd side, station 534.	HYDRAULIC RES. GAGE
103	Aircraft white letters, 1/2", station 440, BL 26 and station 165.	LOCATION FOR MAINT CRANE BASE PLATE
104	Aircraft white dot, 1" station 138.5, 166.5, 427 and 455, BL 26.	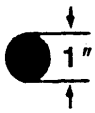
105	Black corner markings, 1" X 3" station 133.86, 174.36, 424.25 and 464.75 BL 34.44 and BL 19.94, 8 places.	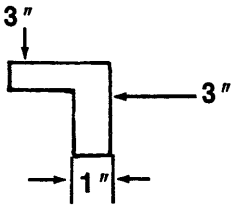

Figure 9-9. Interior Markings, CH-47 (Sheet 16 of 20)

CODE NO.	DIRECTIONS	WORDING
106	Orange-yellow letters, 1” station 348, center of A/C floor. To be read facing fwd of acft on upper door.	**ALTERNATE GROUND EMERGENCY ESCAPE LIFT**
107	Stripe 1” wide across cabin floor at station 120, 242, 364, and 486. Stripe to be aircraft white	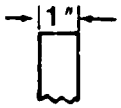
108	Center floor on ramp, 1” white letters.	**MAX WEIGHT 200 LBS. ON WORK PLATFORM**
109	White 1/2” letters, station 500 on floor.	LIFT PLUG FOR MANUAL CARGO DOOR CRANKING **OPEN**
110	Aircraft white 1” letters, fwd edge of stencil on station 360, OB edge of stencil on BL 17.25.	**CRANK HERE TO OPEN AND CLOSE OUTER HATCH** **OPEN**
111	White 1/2” letter, station 132.5, BL 24.5, top of letters facing outboard.	**RESCUE PULLEY ATTACH**
112	Non-skid material on floor. Material required is MIL-W-5044. Type II aft of sta 120 and Type I fwd of sta 120. Refer to paragraph 3—11.	
113	At rear emer. exit, 1” black letters on 15” Orange-yellow arrow. Pointing toward handle. Eff on S/N 66-, 118 and subsequent. Refer to paragragh 7-22.	
114	Right side station 516, WL 53. 1/2” white letters. Eff on S/N 65-7978 and subsequent.	**BRAKE RETURN LINE FILTER**
115	White 1/2” letters, station 525, WL 53 and station 554, WL 29.5, eff on: Qty of 1- S/N 65-7978 thru 65-7994, Qty of 2-S/N 65-7995 & sub.	**WARNING FILTER MAINTENANCE REQUIRED WHEN RED INDICATOR IS EXTENDED.**

Figure 9-9. Interior Markings, CH-47 (Sheet 17 of 20)

CODE NO.	DIRECTIONS	WORDING
116	White 1/2” letters, station 95, WL 21 above 114S1655 back-up panel. Eff on S/N 65-7990 & sub.	**WARNING** **INSTALL BACK-UP** **PANEL BEFORE FLIGHT**
117	First line, 1/2”, lower line 1/8” white, location, station 116, WL 12.0, adjacent to flow regulator. L. S., eff on S/N 65-1995 & sub.	**FLOW REGULATORS** **REGULATED FLOW DIRECTION**
118	Typical for 8 windows. Both sides at station 220, 300, 380, 460, first line 1” letters, remainder 1/2” orange-yellow or reflective letters. 1/2” x 1” orange-yellow stripe around window at 6 places (positions 12, 2, 4, 6,8, and 10 o’clock). Eff on S/N 66-098 and subsequent. Refer to paragraphs 7-19 thru 7-22.	**EMERGENCY EXIT** **PULL STRAP OUT** **PUSH WINDOW OUT**
119	View N–N, both sides at station 502.33, WL 19.0, black letters 1/8” (metal-cal) eff on S/N 66-19059 and subsequent.	**FUEL VALVE** **WARNING LIGHT**
120	View B—B, 5“ white letters, station 120 center of mounting holes. Eff on S/N 65-8014 and subsequent. S/N 66-118 and subsequent	XM 24 GUN MTG XM 24 GUN MTG
121	A two (2”) wide lusterless aircraft white stripe across the floor. Centered on station 160.	2” 160
122	Above the fire axe on right side on the upholstery at station 200, black 1” letters on an aircraft white rectangle.	**FIRE AXE**
123	CH-47D, 3/8” white letters, station 522.5, WL +35.5	**APU CONTROL BOX**
124	CH-47D, Left side of fuselage, 1/2” white letters, station 553.5, WL+8.0	**INTERPHONE** **WALKING CORD** **STOWAGE**
125	CH-47D, left side of fuselage, 1/2” white arrow, station 492, WL+16.0	

Figure 9-9. Interior Markings, CH-47 (Sheet 18 of 20)

CODE NO.	DIRECTIONS	WORDING
126	CH-47D, 1" white letters, 8 required	ALL TIEDOWN RINGS 5000 LB UNLESS NOTED
127	CH-47D left side of fuselage, 1/2" white letters, station 206.0, WL +40	N1 CONT ENG 1
128	CH-47D right side of fuselage, 1/2" white letters, station 206.0, WL +40	N1 CONT ENG 2
129	CH-47D right side of fuselage, 1/2" white letters, station 585.0, WL +48.5	APU START MDL
130	CH-47D right side of fuselage, 1/2" white letters, station 560.0, WL +30.5	NORMAL OPEN
131	CH-47D right side of fuselage, 1/4" white letters and arrow, station 538.0, WL +41.5	At temps above 25°F precharge accumulator to 1800 psi with air or nitrogen. Accumulation will bottom at 3000 psi.
132	CH-47D right side of fuselage, 1/4" white letters, station 538.0, WL +38.0	At temps below minus 25°F precharge accumulator 2050 psi with air or nitrogen. Accumulator will bottom at 3350 psi.
133	CH-47D right side of fuselage, white letters, station 538.0, WL +34.5	CAUTION 1/2" DO NOT HAND PUMP SYSTEM 1/4" ABOVE BOTTOMING PRESSURES. 1/4"
134	CH-47D right side of fuselage, white letters, and 1/2" arrow, station 515.5, WL +16.0	EMERGENCY 1/2" UTIL PRESS 1/2" ←EMER. NORM→ 3/8"
135	CH-47D right side of fuselage, 1/2" white letters, station 515.5, WL +14.5	EMERG UTIL PRESS NORMAL OPEN
136	CH-47D right side of fuselage, 3/8" white letters, station 517.0, WL +7.5	HYDR SYS FILL NO. 1 FLT SYS — C — NO.2 FLT SYS 3 L — UTILITY OFF 2 1

Figure 9-9. Interior Markings, CH-47 (Sheet 19 of 20)

CODE NO.	DIRECTIONS	WORDING
137	CH-47D, right side of fuselage, 1/2" white letters, station 523.0, WL +7.5	**HYDR SYS FILL . . .**
138	CH-47D, center of f oor, 3/8" white letters and arrow, station 330.0	**EMERG UTIL PRESS** **NORMAL** **OPEN**
139	On inside of aft transmission servicing access door. 1/4-in. aircraft black letters.	**MIL-L-7808 — CAP. 27** **QUARTS, SUMP — 9 QUART** **SYSTEM. RUN FOR** **3 MINUTES, SHUT DOWN — REFILL** **TO FULL MARK ON XMSN CASE**

Figure 9-9. Interior Markings, CH-47 (Sheet 20 of 20)

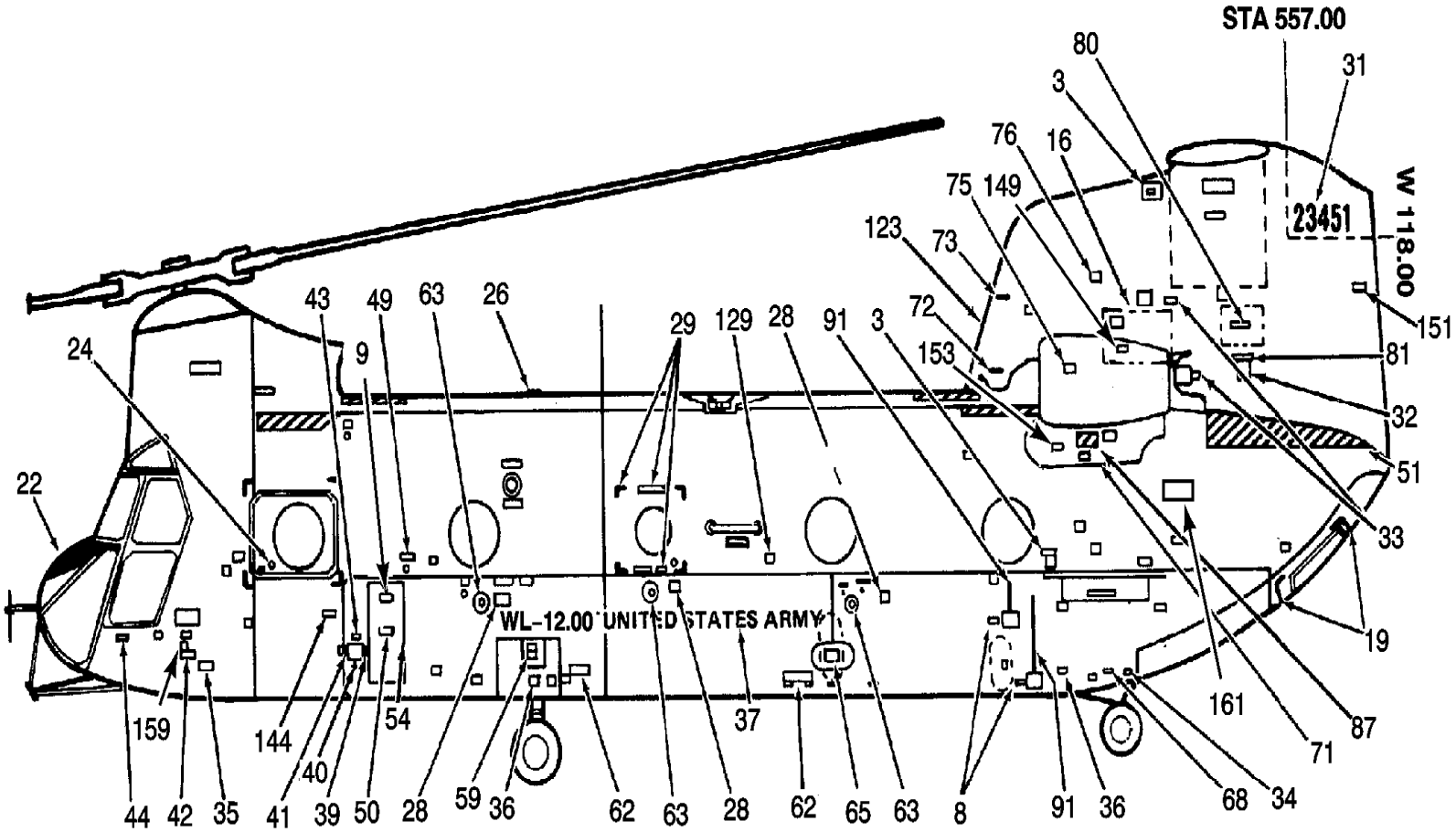

LEFT SIDE VIEW

MS038531

Figure 9-10. Exterior Markings, CH-47 (Sheet 1 of 29)

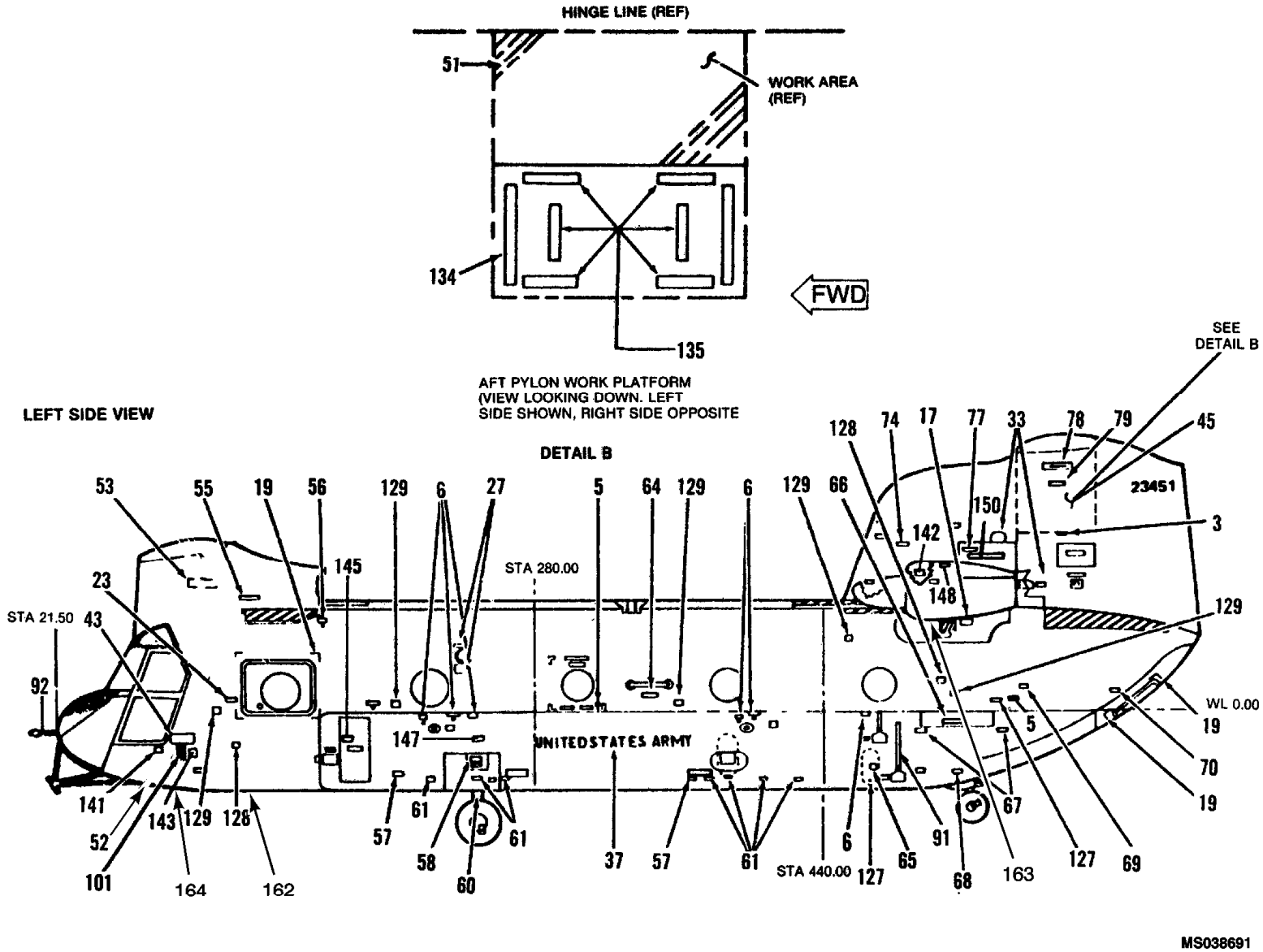

Figure 9-10. Exterior Markings, CH-47 (Sheet 2 of 29)

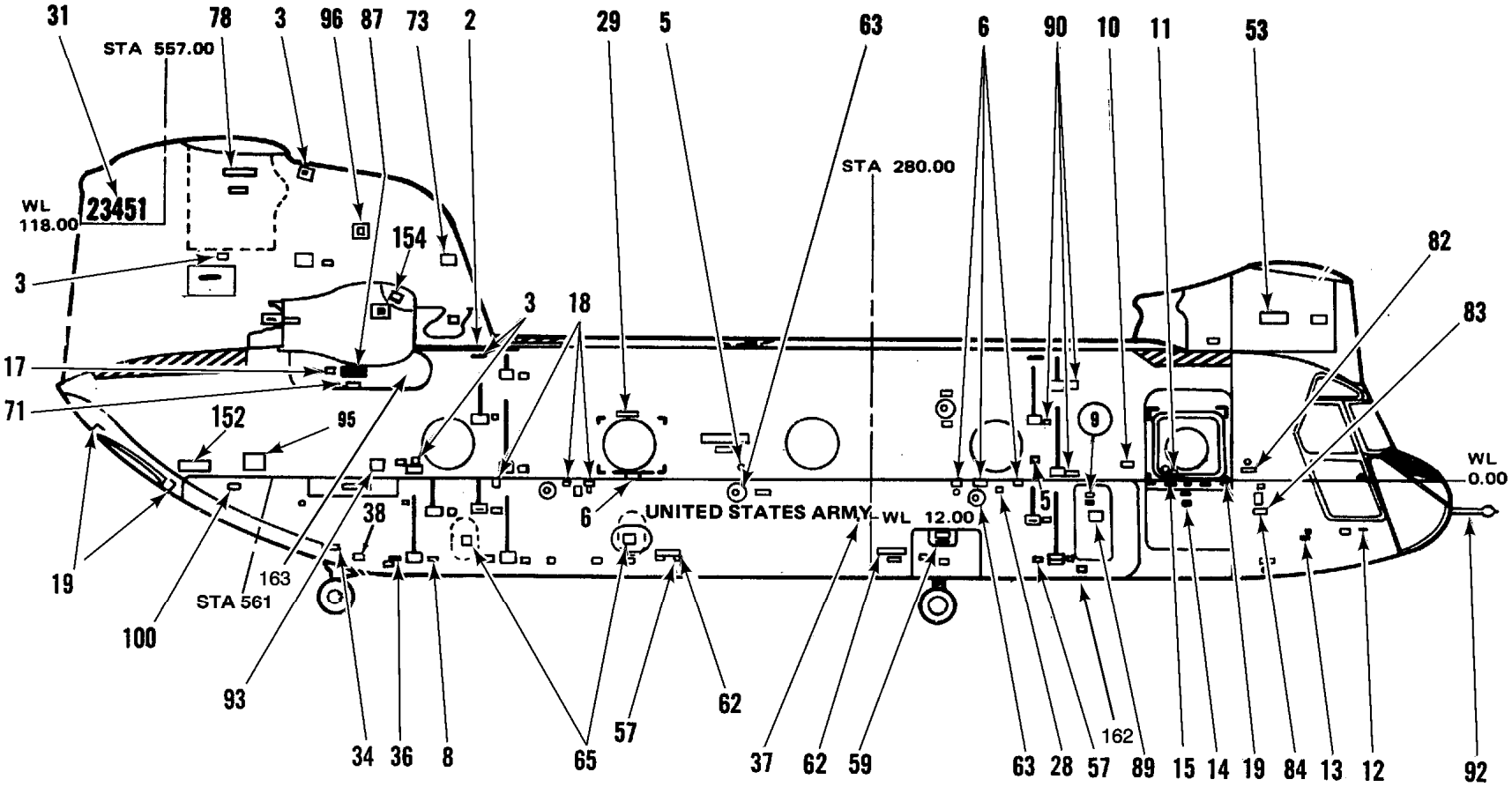

RIGHT SIDE VIEW

MS038423

Figure 9-10. Exterior Markings, CH-47 (Sheet 3 of 29)

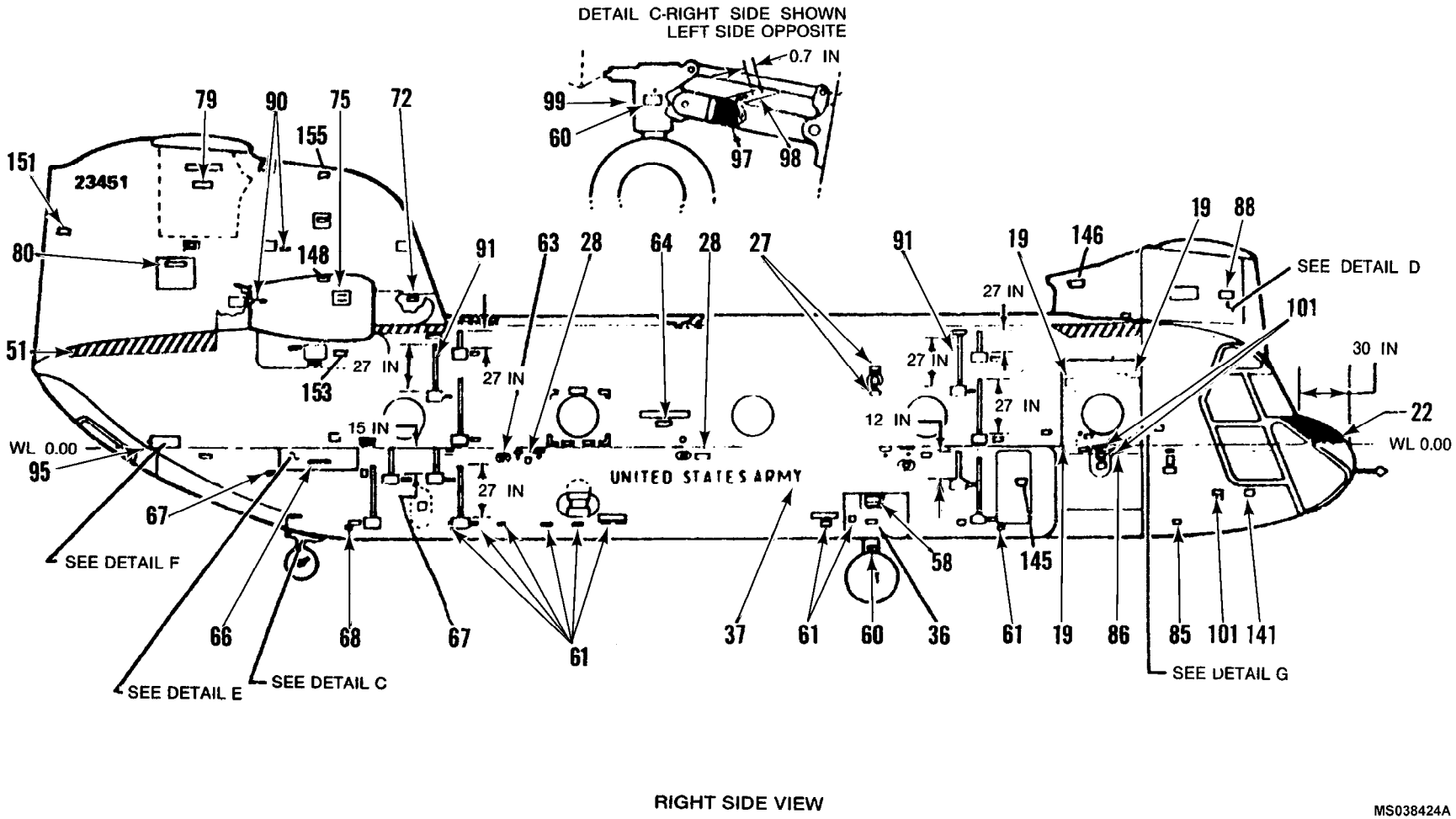

RIGHT SIDE VIEW

MS038424A

Figure 9-10. Exterior Markings, CH-47 (Sheet 4 of 29)

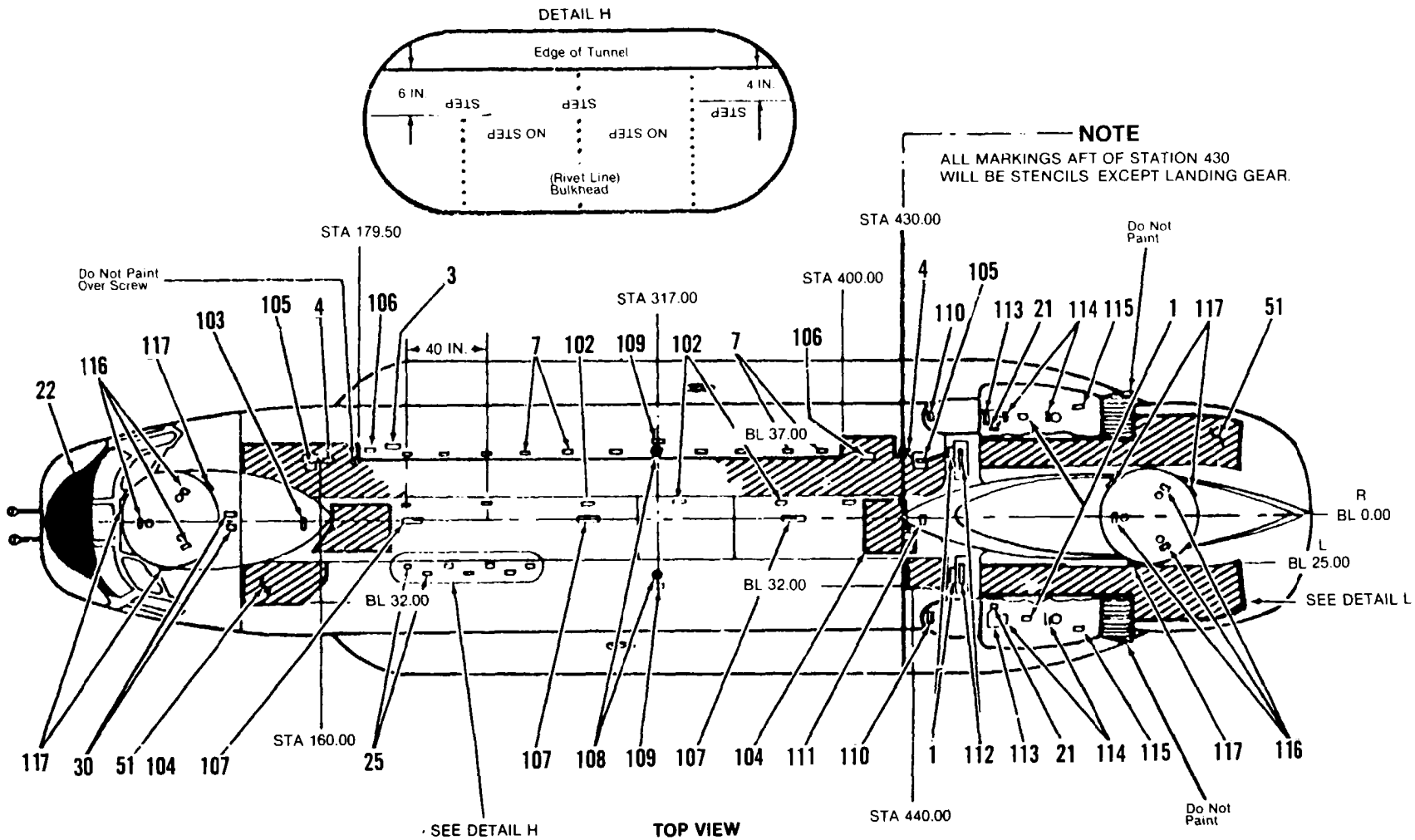

Figure 9-10. Exterior Markings, CH- 47 (Sheet 5 of 29)

NOTE: ON HELICOPTER WITH MULTIFUEL CELLS

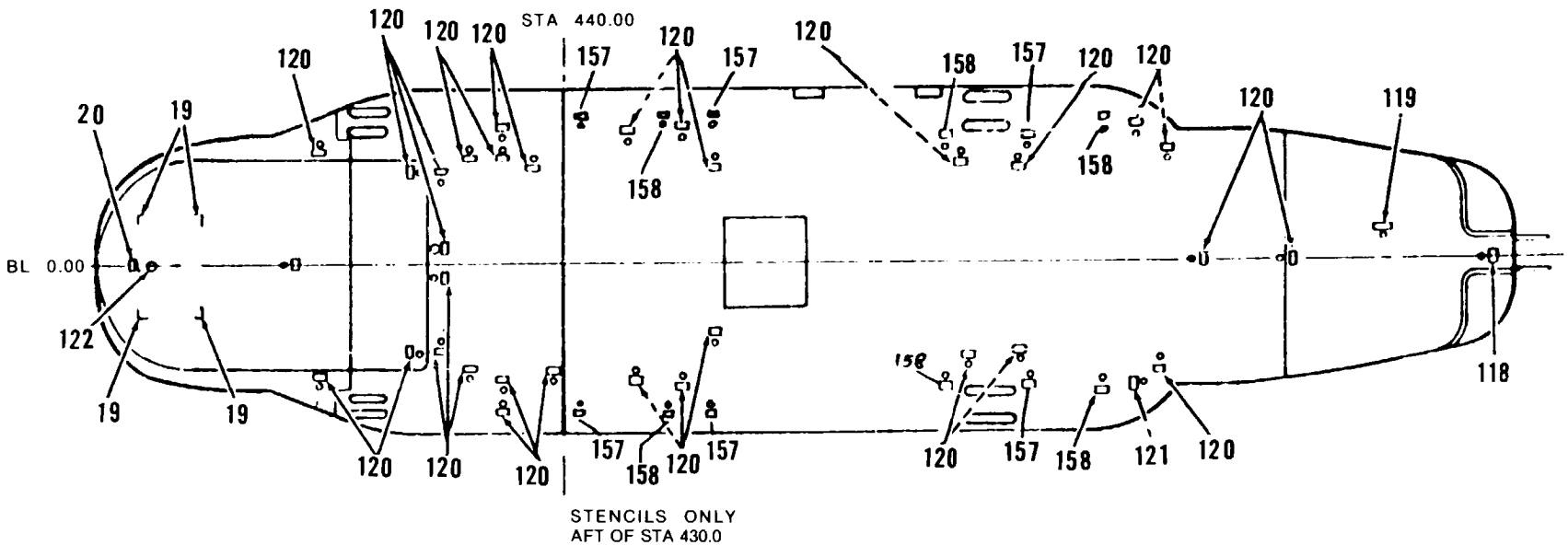

BOTTOM VIEW

Figure 9-10. Exterior Markings, CH-47 (Sheet 6 of 29)

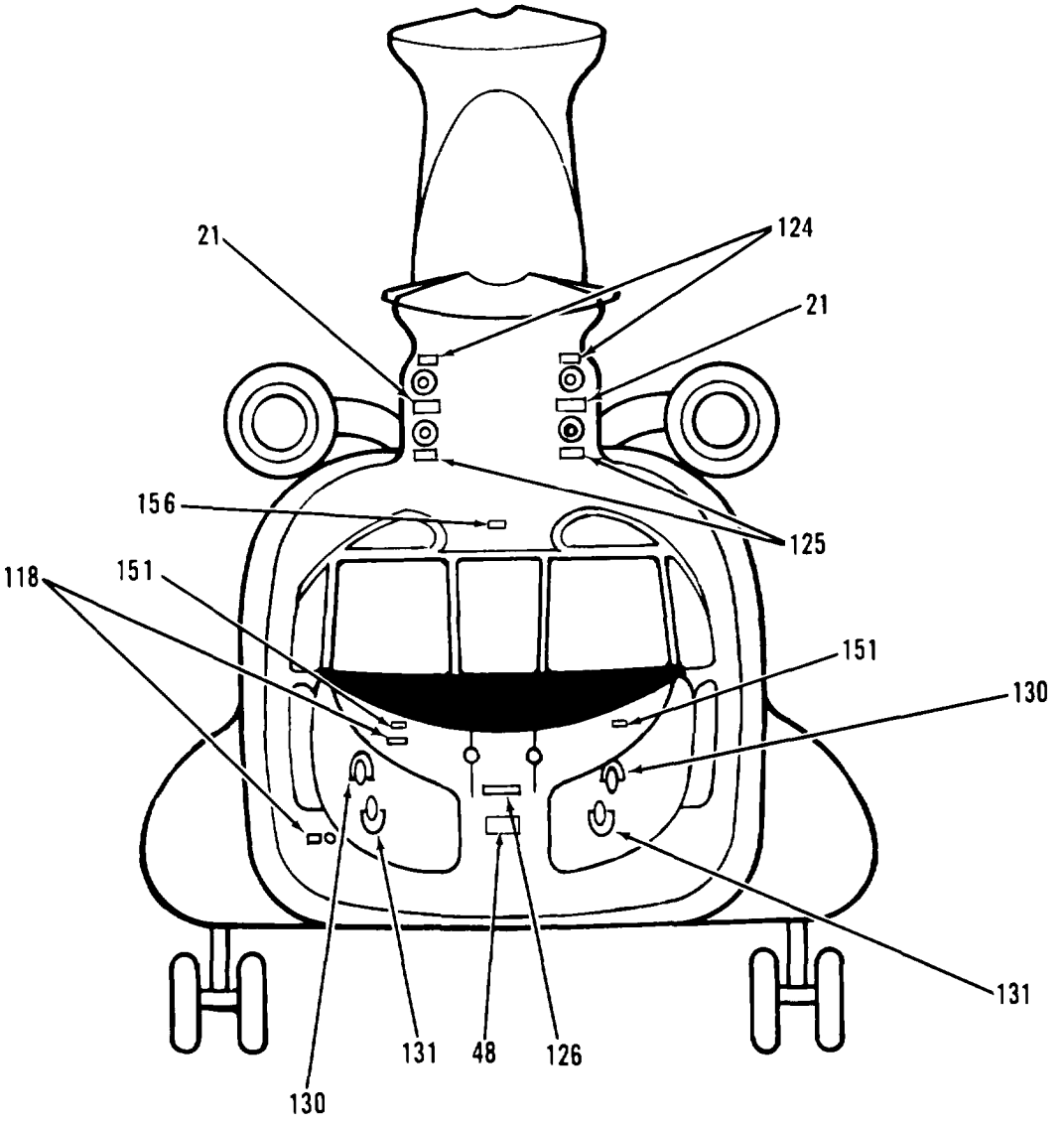

Figure 9-10. Exterior Markings, CH-47 (Sheet 7 of 29)

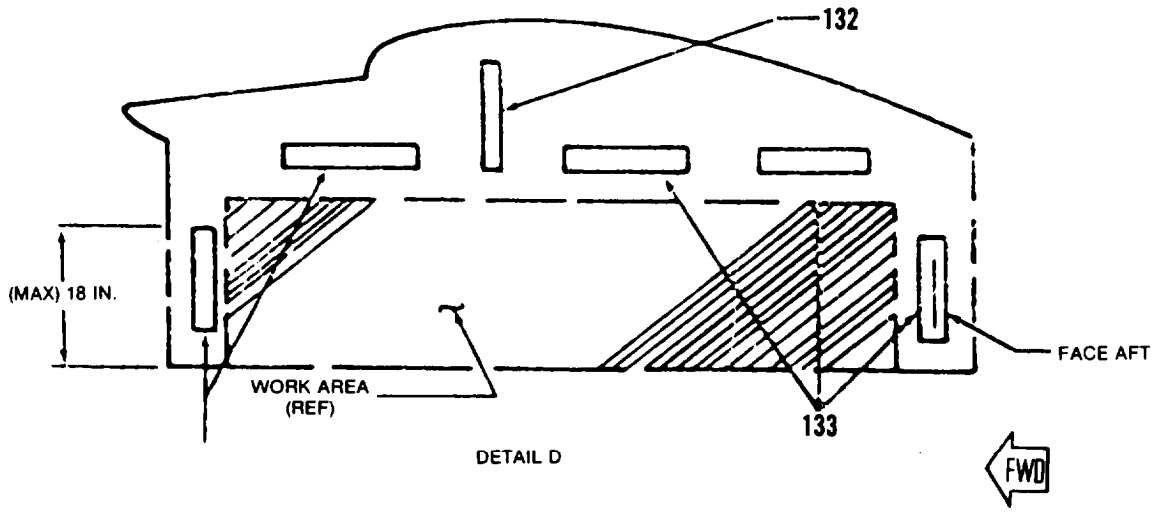

FORWARD PYLON WORK PLATFORM
(VIEW LOOKING DOWN. RIGHT
SIDE SHOWN, LEFT SIDE
OPPOSITE)

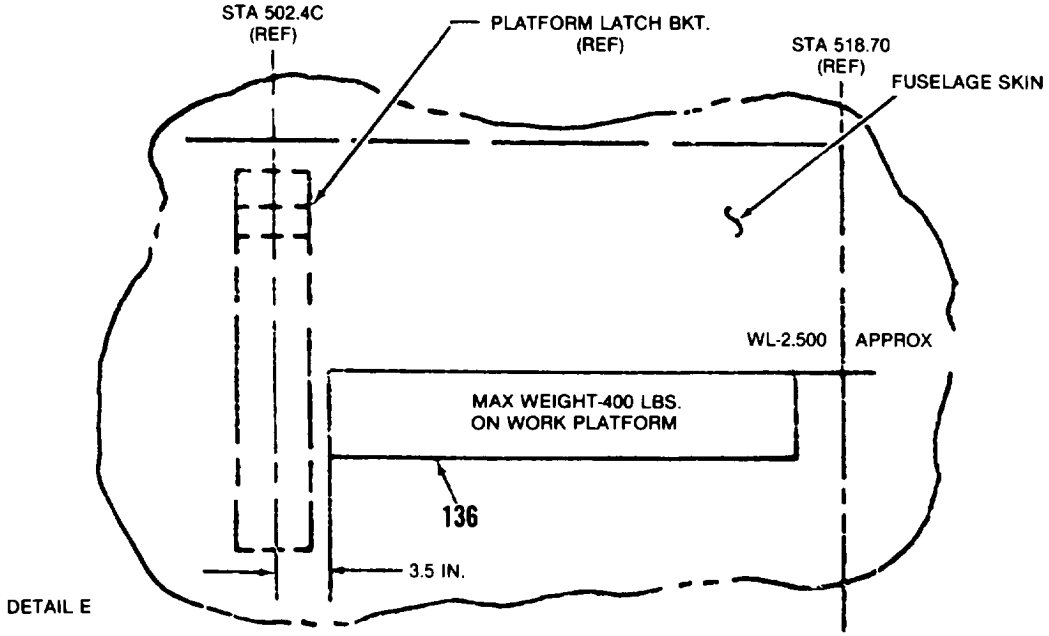

ENGINE WORK PLATFORM
(VIEW LOOKING INBD
WITH PLATFORM IN OPEN
POSITION. RIGHT SIDE
SHOWN. LEFT SIDE OPPOSITE)

Figure 9-10. Exterior Markings, CH- 47 (Sheet 8 of 29)

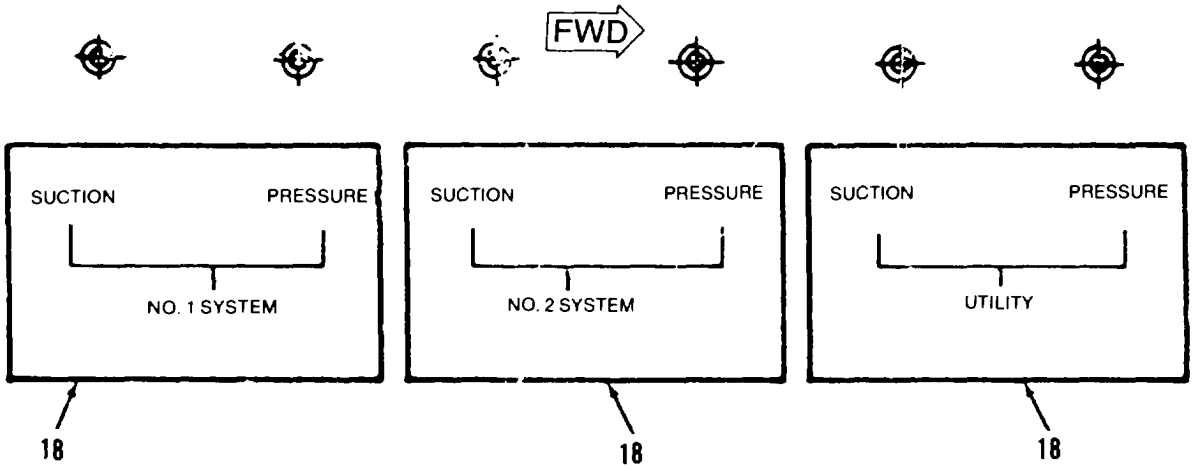

VIEW LOOKING AT HYDRAULIC TEST PANEL

DETAIL F

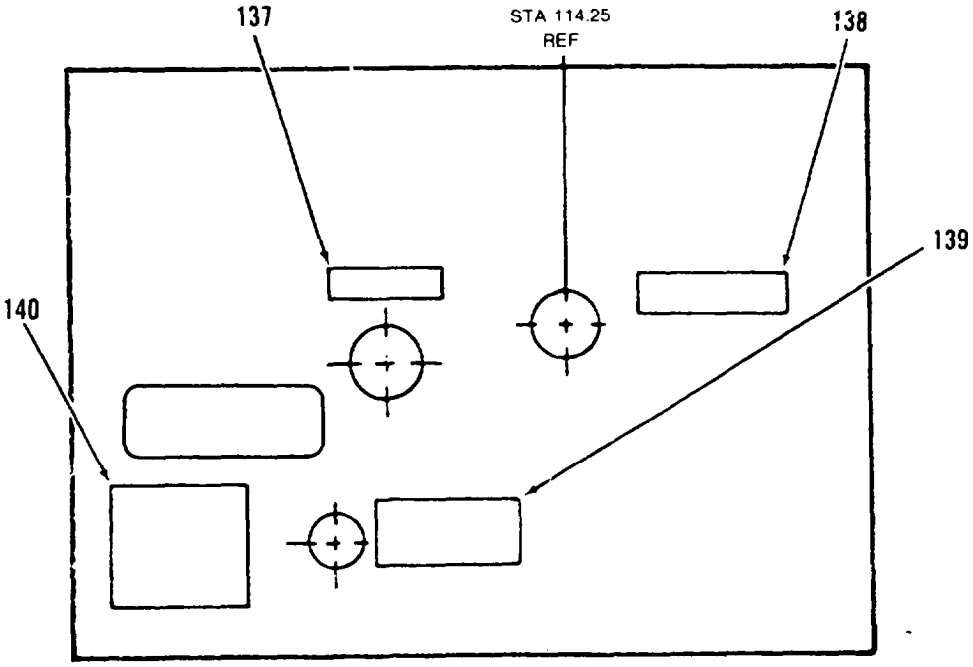

DETAIL G
RECEPTABLE PANEL

Figure 9-10. Exterior Markings, CH-47 (Sheet 9 of 29)

DETAIL I

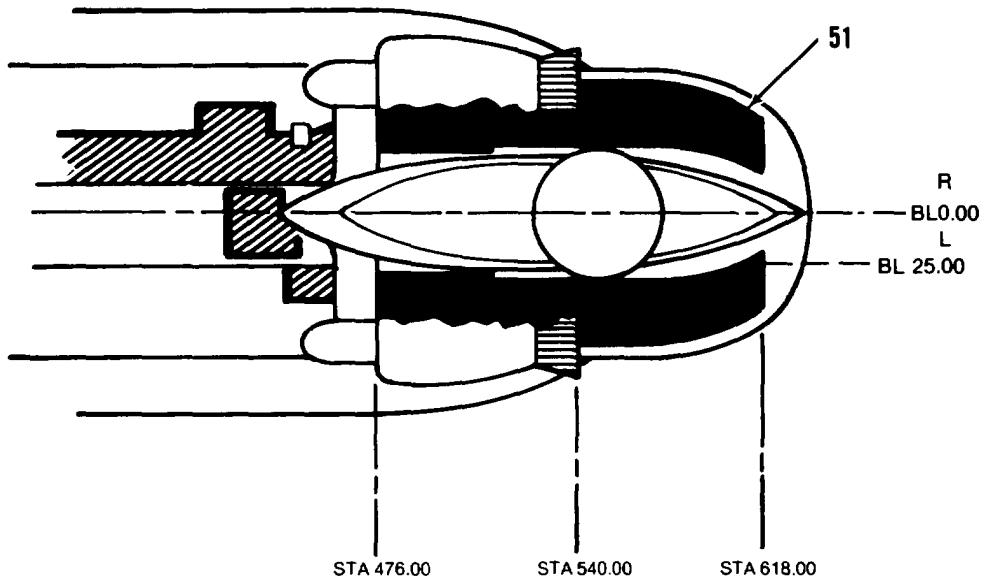

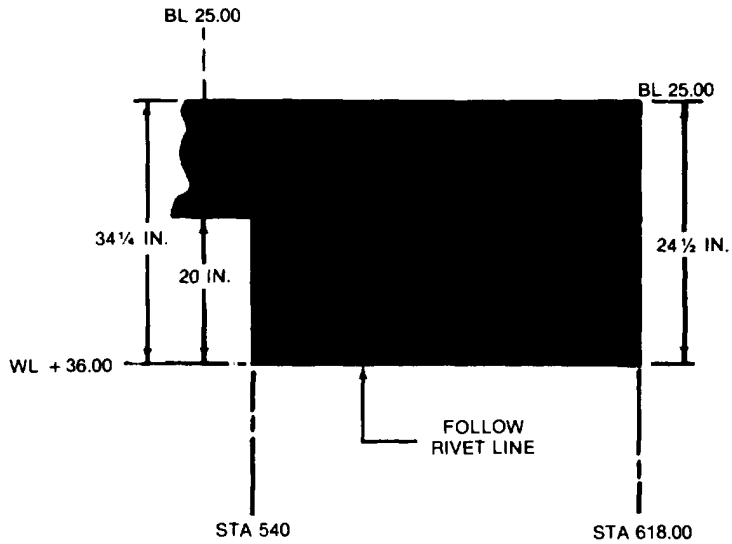

TOP VIEW
(TAIL PIPE AREA)

Figure 9-10. Exterior Markings, CH-47 (Sheet 10 of 29)

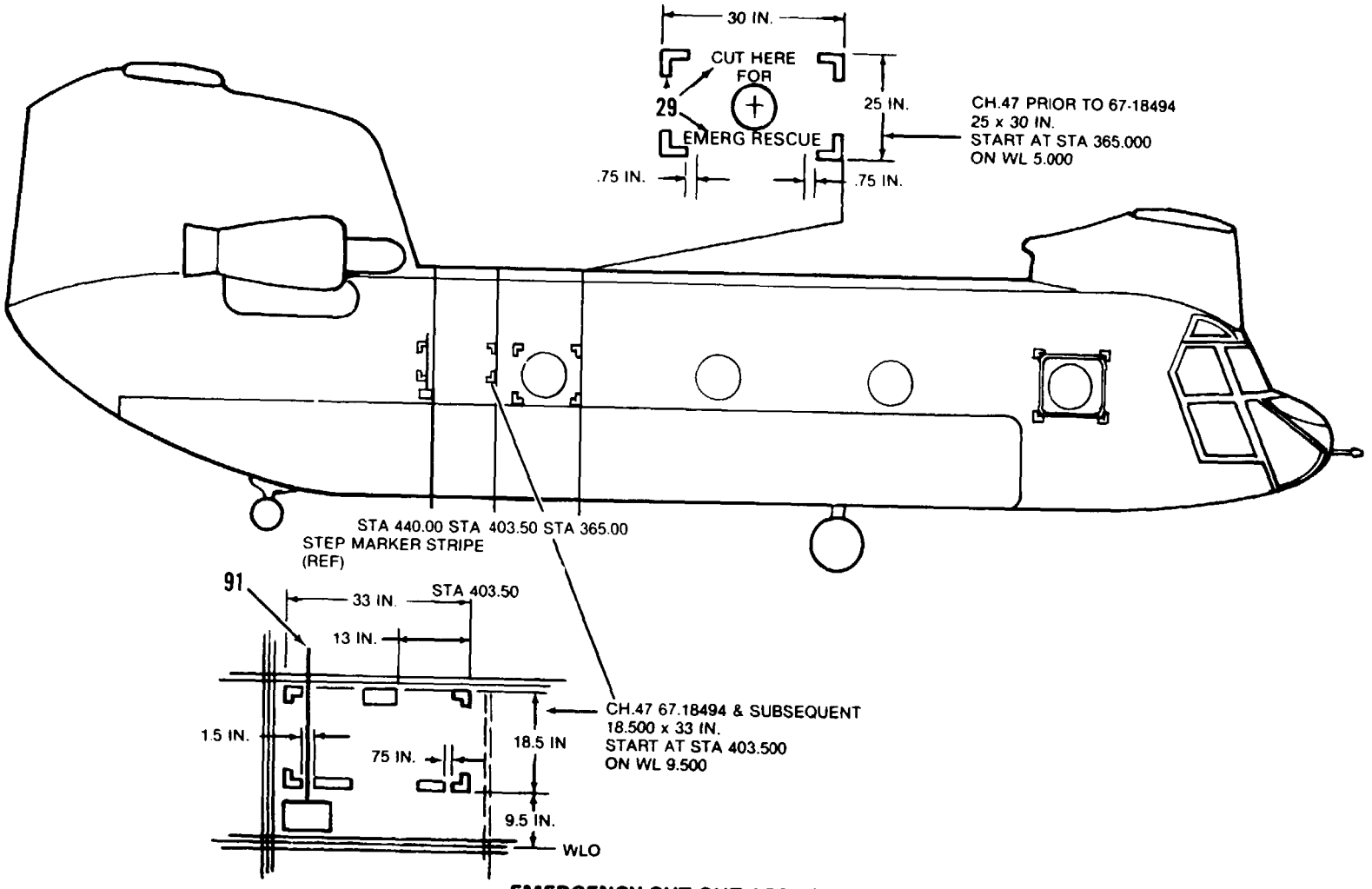

EMERGENCY CUT OUT AREAS
RIGHT SIDE VIEW

Figure 9-10. Exterior Markings, CH- 47 (Sheet 11 of 29)

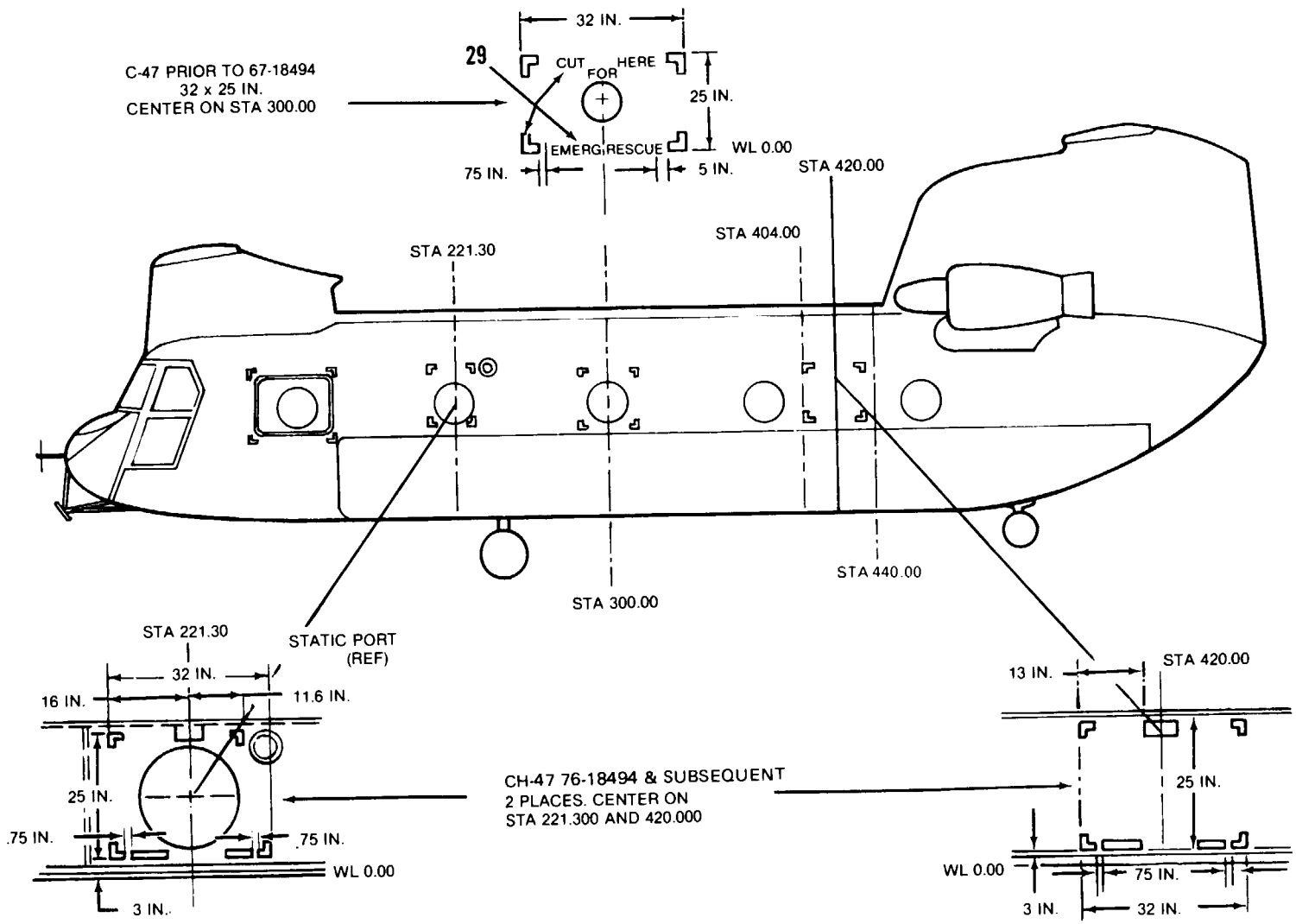

EMERGENCY CUT OUT AREAS
LEFT SIDE VIEW

Figure 9-10. Exterior Markings, CH-47 (Sheet 12 of 29)

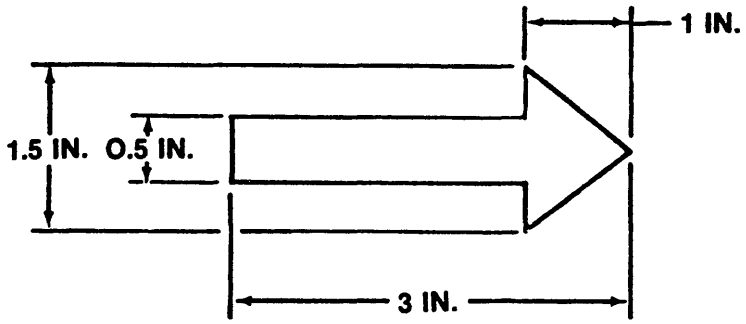

1. Unless otherwise noted, all lettering is to be 1-in.
2. A standard size arrow will be used, when required, in the following stencil.

CODE NO.	DIRECTIONS	WORDING
1.	Fixed portion of cowl between nacelle and vertical .n. Bottom of letters facing fwd. Also top of engine nacelle facing outbd. MIL-DTL-64159 or MIL-DTL-53039 aircraft black, No. 37038	**NO STEP**
2	DELETE	
3	Used with each set of steps, both sides of fuselage. Also, above handgrip, top and side of rear pylon, both sides, aircraft black.	**HAND HOLD**
4	Adjacent to access doors. To be read from walkway, aircraft black.	**INSTALL COVER BEFORE FLIGHT**
5	Paint a black ground symbol, shade 37038, dimensions per MIL-C-83413/9-2. Remove the outside circle at sta 206 & 246 left fuselage. (Due to Emergency cut-out).	

Figure 9-10. Exterior Markings, CH-47 (Sheet 13 of 29)

CODE NO.	DIRECTIONS	WORDING
6	Both sides of fuselage, 1/2-in. aircraft black letters.	**FUEL VENT**
	NOTE CH-47, serial No. 68-15812 and subsequent, sta 330. CH-47, serial No. 6718494 thru 68-15811, sta 245 and 386. CH-47, serial No. 66-19098 thru 67-18493, sta 231 and 395. CH-47, serial No. 67-18594 and subsequent, sta 189, 243, 387, and 442. CH-47D, both sides of fuselage, sta 242, 378, 443, WL +.5.	
7	Right side top of fuselage, 2 in. below walkway, positioned between bulkheads (rivet line) between sta 179.5 and sta 400. 1-in. aircraft black letters to be read from walkway.	**NO STEP**
8	Both sides of fuselage adjacent to step **NOTE** On CH-47B, serial No. 66-19098, the lower right side of the fuselage has a hinge type folding step. This stencil is applied on the door under the release knob. First line is 1-in., remainder is 1/2-in. aircraft black.	***STEP** **STEP** **PULL KNOB DOWN** **AND OUT TO** **OPEN STEP**
9	On generator control, engine control access door, both sides of fuselage (inside compartment) MIL-DTL-64159 or MIL-DTL-53039, orange-yellow, No. 33538 letters, sta 176, WL -10.	**DANGER HIGH** **VOLTAGE**
10	Aft of fwd entrance door on right side, sta 162, WL 8, in lusterless black letters.	**EXIT** **RELEASE** →
11	On emergency exit panel in fwd entrance door on right side fwd of pull tab, aircraft black.	**PULL TAB** **OUT PUSH** **PANEL IN**
12	Below lower flight compartment side window in line with door jettison handle on right side, aircraft black.	← **DOOR JETTISON**
13	Below door jettison handle on right side of fuselage, sta 93, WL -24, lusterless black letters.	↑ **DOOR JETTISON** **PUSH TRIGGER** **TURN HANDLE UP**
14	Lower section of fwd entrance door on right side aft of door handle in lusterless black letters, sta 133, WL -12.	↑ **PUSH TRIGGER** **TURN HANDLE UP** **PULL DOOR OUT**
15	Upper section of fwd entrance door on right side, aft of door release, in lusterless black letters, sta 157, WL -2.5.	↑ **PUSH TRIGGER** **TURN HANDLE UP**

Figure 9-10. Exterior Markings, CH-47 (Sheet 14 of 29)

CODE NO.	DIRECTIONS	WORDING
16	1/2-in. aircraft black letters inside pylon.	**REMOVE BONDING JUMPER WHEN DOOR IS TO BE REMOVED. INSTALL BONDING JUMPER WHEN INSTALLING DOOR.**
17	Below engine nacelles, both sides, aft of air intake screen, 1” aircraft black. Sta 491, WL 52.	**ENGINE ACCESS FOR FIRE EXTINGUISHER**
18	DELETE	
19	Around emergency exit panels. On both sides of fuselage and on rear cargo door, Emer. exit outlines at each corner with corner bands 1 in. wide and 3 in. long at each leg and painted aircraft black.	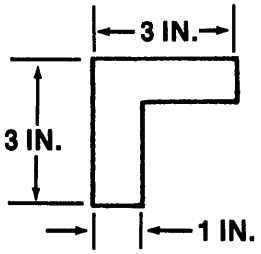
20	Centered under cargo ramp, above emergency exit, sta 610, 1” aircraft black.	**EMERGENCY EXIT PULL STRAP OUT PUSH PANEL**
21	Top center of engine nacelles between oil f ller access and oil quantity indicator access doors. Top of letters facing outbd, 1/2-in. aircraft black letters.	**LUB OIL MIL-L-23699 ABOVE -25°F MIL-L-7808 BELOW -25°F**
22	DELETE	
23	Adjacent to fwd edge of fwd emergency exit. Left side, sta 119, WL 6. Arrow should point to pull tab. 1” Aircraft black.	**EXIT RELEASE**
24	Left side, on bottom corner of emergency exit above pull tab. Aircraft black.	**PULL TAB OUT PUSH PANEL IN**

Figure 9-10. Exterior Markings, CH-47 (Sheet 15 of 29)

CODE NO.	DIRECTIONS	WORDING
25	Top of fuselage, right side of walk way from Sta 160 to Sta 420, 1-in. aircraft black letters 37038, top of letters facing outboard, Word NO STEP 2" out from walk way, 6 places. On left side of tunnel, word NO STEP 4" out from tunnel on bulk head 6 places.	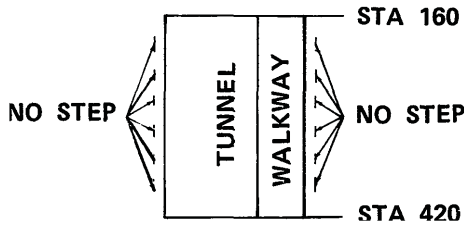
26	DELETED	
27	Both sides of fuselage at static ports. 1 3/4-in. unpainted area within rivet pattern, 1/2-in. black circle around static port, 6-in. I.D. 1/2-in. letters. Remainder of stencil 1/4-in. letters.	**STATIC PORT** 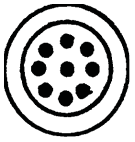 **DO NOT PLUG OR DEFORM HOLES; AREA WITHIN CIRCLE MUST BE SMOOTH AND CLEAN.**
28	Both sides of fuselage. Aft side of f ller cap on left side and fwd side of f ller cap on right side. The early model helicopters have one tank on each side of the center of the fuselage. Later helicopters have three tanks, one fwd and one aft of the center tank. Aircraft black. Also on CH-47D, right side of fuselage, sta 257., WL -17.	**FUEL SERVICE THIS AIRCRAFT WITH MIL-T-83133GRADE NO. JP-8 AVIATION FUEL. IF NOT AVAILABLE, REFER TO TB 55-9150-200-24 FOR ALTERNATE FUEL**
29	Cut out corners 3 x 3 x 1 in. CH-47 prior to serial No. 68-15812, left side centered around window at sta 300 and right side at sta 380. CH-47, serial No. 68-15812 and subsequent, left side centered on sta 221.30 and 420, and right side at sta 416.50. See sheet 12 and 13. Aircraft black.	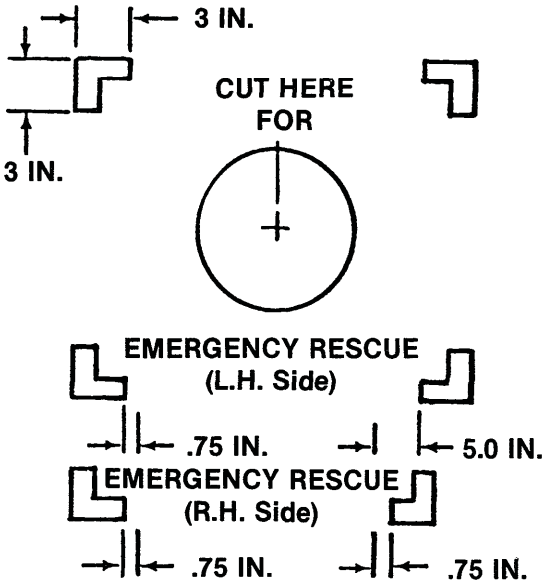

Figure 9-10. Exterior Markings, CH-47 (Sheet 16 of 29)

CODE NO.	DIRECTIONS	WORDING
30	Top of fwd pylon aft of rain shield at sta 114. Top of letters facing inboard. Effective on CH-47, serial No. 66-19098 aircraft black.	**HAND HOLD**
31	Both sides of pylon on WL 118.00, start at sta 557 and extend aft. Lettering 6-in. lusterless black.	**(insert serial no.)**
32	DELETED	
33	Left side of pylon adjacent to kick in step panels, aircraft black.	**STEP**
34	Lower aft section of fuselage in line with towing eye on tail gear both sides, sta 514, WL -28, aircraft black.	**TOW** ↓
35	Left side fuselage, sta 95, WL -25. CH-47D only, left side fuselage, sta 95, WL -25 and both sides of fuselage sta 488.5, WL -28. 1/2-in. aircraft black letters and arrows.	**JACK POINT UNDER** ↓
36	DELETED	
37	Both side of Aircraft. Most forward letter (U-left side, Y-right side) to start at STA 280.00, Top of letters will be at WL-12. Letters to be 6 in. high lusterless black. Additional dimensions and spacing in accordance with Fig 8-2.	**UNITED STATES ARMY**

Figure 9-10. Exterior Markings, CH-47 (Sheet 17 of 29)

CODE NO.	DIRECTIONS	WORDING
38	Both sides fuselage at sta 241, WL-34, aircraft black.	**FUSLG JACK POINT AND MOORING POINT UNDER** ↓
39	Both sides of fuselage, 1/2-in. aircraft black letters and arrow, sta 496, WL -28	**MOORING POINT UNDER** ↓
40	Aircraft black. **NOTE** Below access door at sta 169, sta 163, WL-23.	**115/208 V 400 CYCLE A.C.**
41	Above external power access panel, Sta 169, on left side, aircraft black.	**EXT PWR DC-AC**
42	Fwd of external power access panel on left side, Sta 166, 1/2-in. aircraft black letters.	**28 V.D.C.**
43	Below door jettison handle on left side, Sta 93, WL 24, aircraft black.	DOOR JETTISON PUSH TRIGGER TURN HANDLE DOWN ↓
44	Left side of fuselage aft of cabin window, Sta 93, WL 11.50. First two lines 1-in, remaining lines 1/2-in. aircraft black.	**U.S. ARMY MODEL CH-47A (B, C or D)** **U.S.A. SERIAL NO. (insert serial no.)** **Service this aircraft with MIL-T-83133 grade No. JP-8 aviation fuel. If not available refer to TB 55-9150-200-24for alternate fuel.**
45	Below lower .ight compartment side window in line with door jettison handle on left side aircraft black. FOR TACTICAL HELICOPTERS ONLY.	DOOR JETTISON →

Figure 9-10. Exterior Markings, CH-47 (Sheet 18 of 29)

CODE NO.	DIRECTIONS	WORDING
46	DELETE	
47	DELETED	
48	DELETED	
49	Authorized placement of unit insignia is on nose access panel.	
50	Above battery vent, left side of fuselage, Sta 188. 1/4-in. aircraft black letters.	**BATTERY VENT**
51	On battery access panel, left side of fuselage, Sta 188, WL 16, aircraft black.	**BATTERY** **INSIDE**
52	Black walkway material on indicated shaded areas	
53	Paint code 1/4-in. black letters left side of fuselage, Sta 118, WL -28. **Contractor will insert their name code.	****WP1-P2-L3 Date** **WP - indicate wash primer used** **P - indicate primer used** **L - indicate lacquer used (if req'd)** **C - indicate coating used (if req'd)**
54	DELETED	
55	Both sides of fwd pylon fairing, 1/2-in. black letters, Sta 97.50 WL +67.	**ACCESS** **FWD ROTOR SYS** **HYDR COMPT** **WORK PLATFORM**
56	DELETED	
57	Both sides of fwd pylon, Sta 123, WL 63.50 aircraft black.	**AIRCRAFT** **LIFT PTS** **INSIDE** ↙

Figure 9-10. Exterior Markings, CH-47 (Sheet 19 of 29)

CODE NO.	DIRECTIONS	WORDING
58	Left side of fuselage, Sta 204, above drain tube. 1/4-in. black letters.	**TUNNEL DRAIN**
59	Both sides of fuselage, 3places, Sta 226, 355 and 485, WL -34.0. 1/2-in. black letters.	COMPT DRAINS UNDER ↓
60	DELETE	
61	Both sides of fuselage, Sta 436.0, WL -23.0. Centered on forward landing gear access door, black.	**ACCESS FUEL SYSTEM INSP.**
62	On landing gear struts, 1/4-in. black letters.	**TIRE** **PRESSURE** ***88PSI**
63	Both sides of fuselage, aircraft black. CH-47D, both sides of fuselage, 14 places at Sta 194.1, 235.2, 261.2, 363.6, 379.0, 396.2.	**FUEL** **DRAIN** ↓
64	Both sides of fuselage, 2 places, Sta 261 and 355. CH-47D only, Sta 261, 370.50. Black letters.	**Disconnect electrical plugs in fuel cell access panel before dropping tank.**
65	DELETE	

Figure 9-10. Exterior Markings, CH-47 (Sheet 20 of 29)

CODE NO.	DIRECTIONS	WORDING
66	DELETE	
67	Both sides of fuselage centered on access plate, aircraft black, Sta 381 and 449.	**ACCESS FUEL SYSTEM INSP**
68	Left and right aft work platform, centered on platform at WL -2.50, black letters.	**WORK PLATFORM**
69	Both sides of fuselage, fore and aft of work platform above support point at Sta 474.0 and 521.0, WL -6.0 black letters.	**WORK PLATFORM SUPPORT POINT**
70	Both sides of fuselage, Sta 485, WL -34. 1/2-in. black letters as required per model helicopter.	**COMPT DRAINS UNDER**
71	Left side of fuselage, Sta 546.50, WL 15, black letters.	**ACCESS APP EMERG FLUID SHUT OFF**
72	Left side of fuselage, Sta 543, WL 50. First line 1-in. black letters, remaining letters 1/4-in., located in front of each overboard drain tube. **NOTE** Applicable on CH-47, serial No. 67-18494 and subsequent.	**ENGINE DRAINS *STARTER RELIEF VALVE DRAIN HYDRAULIC DRAIN AFT XMSN DRIP PAN ENGINE COMB CHAMB ENGINE BREATHER ENGINE MANF**
73	Both sides of engine cowling below screened air intake, Sta 486, WL 46.0, black letters.	**ACCESS ENGINE QUICK DISCONNECT**
74	Both sides of rear pylon, Sta 471, WL 79, black letters.	**AIRCRAFT LIFT PTS INSIDE**

Figure 9-10. Exterior Markings, CH-47 (Sheet 21 of 29)

CODE NO.	DIRECTIONS	WORDING
75	Both sides of rear pylon, Sta 457, WL 106.5, fwd of screened air intake, black letters.	**ACCESS XMSN OIL COOLER**
76	On CH-47, serial No. 65-7966 to 65-8025, left side of rear pylon, below screened area, black letters.	**ACCESS ENGINE GEAR BOX CHIP DETECTORS**
77	On outboard side of #1 engine and inboard side of #2 engine, aft of access door, black letters.	**ACCESS OIL QUANTITY INDICATOR**
78	DELETE	
79	DELETE	
80	Left side of fuselage near top of rear pylon, Sta 550, WL 128, black letters	**ACCESS THRUST BEARING & WORK PLATFORM**
81	DELETE	
82	Both side of pylon centered on access door, Sta 564, WL 85.0, black letters.	**ACCESS XMSN**
83	DELETE	
84	Right side of fuselage under overboard drain, Sta 107, WL 15, 1/2 in. black letters.	**WATER DRAIN HEATER INLET**
85	Right side of fuselage above access door, Sta 114, WL -1, black letters.	**INPH JACK**
86	DELETE	
87	Right side of fuselage above overboard drain line, Sta 101, WL -34.5 1/2-in. black letters.	**HEATER FUEL DRAIN**
88	Right side of fuselage on upper door, fwd of release handle, Sta 127, WL -2.5, black letters.	**LIFT DOOR UP**

Figure 9-10. Exterior Markings, CH-47 (Sheet 22 of 29)

CODE NO.	DIRECTIONS	WORDING
89	Both sides of aft fuselage inside insp panel, black letters.	**NO HAND HOLD**
90	Right side of fwd pylon fairing, Sta 78, WL 66, black letters.	**XMSN OIL** **FILLER INSIDE**
91	Right side of fuselage on access door, Sta 187, WL -15, black letters.	**ACCESS** **A.C. POWER** **EQUIP**
92	Right side of fuselage adjacent to each side of step kick in door panel above water line **NOTE** The first two lower steps on the right side of the pod have a folding hinge type door. This marking goes on the door of the step below the door knob. First line is 1-in, remainder is 1/2-in. black letters.	**STEP** **STEP** **PULL KNOB DOWN** **AND OUT TO** **OPEN STEP**
93	Both sides of fuselage, step guide above each step. 1/4-in. wide, 12-in., 15-in., or 27-in. lengths, black letters.	12 IN. 15 IN. 27 IN.
94	Outboard side of each mounting pitot tube. First line centered horizontally on tube, second line below center. 1/2-in. black letters.	**NO PUSH** **KEEP OFF**
95	Right side of fuselage, aft small access plate, on larger access plate, Sta 494.50, black letters.	**ACCESS** **RAMP** **CONTROL** **DN-STOP-UP**
96	Right side of fuselage above access plate, Sta 487.50 black letters.	**INPH** **JACK**
97	Right side of fuselage on aft access panel near tail, Sta 561, WL 15, black letters.	**HYD SYSTEM** **TEST** **PANEL**
98	DELETE	

Figure 9-10. Exterior Markings, CH-47 (Sheet 23 of 29)

CODE NO.	DIRECTION	WORDING
99	Both aft landing gear drag struts, 1/2 in. aircraft black letters.	**WARNING** **DO NOT LOAD GEAR WITH STATIC LOCK ENGAGED**
100	Both aft landing gear drag links. MIL-DTL-64159 or MIL-DTL-53039, aircraft red. No. 31136, arrow 1 in. x 3 in. Effective CH-47 serial No. 63-7922 and subsequent.	
101	Both sides of ramp at sta 24, 1/2-in. aircraft black letters. Stencil vertical on ramp.	**WARNING** **REFER TO MANUAL BEFORE DISCONN HYD LINES**
102	Right side of fuselage, near tail, first two lines 1-in. black letters. Remainder of stencil 1/4 in. Each line will be placed fwd of overboard drain tube.	**ENGINE DRAINS** **#○ HYD COMPARTMENT DRAIN** *** ○ APU FUEL PUMP SEAL** **** ○ APU COMB CHAMB** **○ ENGINE COMB CHAMB** **○ ENGINE BREATHER** **○ ENGINE MANF**
103	Finish of door handle and emergency door and cockpit handles, both sides of helicopter. Paint aircraft black.	
104	On top of tunnel facing left of walkway area. Starting at Sta 200, BL6 right hand side, and spaced 40-in. apart, black letters.	**NO STEP**
105	Centered on top of fwd pylon at Sta 134, black letters.	**NO STEP**
106	Top of fuselage around all walkway areas, 2-in. black border.	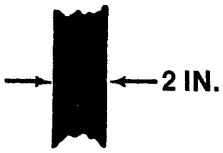

Figure 9-10. Exterior Markings, CH-47 (Sheet 24 of 29)

CODE NO.	DIRECTIONS	WORDING
107	Top of fuselage, right side, fwd on access door, Sta 152. Top of black letters facing outboard. Also right side aft, Sta 443.5 on CH-47 serial No. 66-19098 thru 67-18484.	**ACCESS** **MAINT** **DAVIT**
108	Top of fuselage, right side aft of walkway indent, Sta 175. Also aft right side, of fuselage at Sta 416. 1/2-in. black letters.	**MAINT CRANE AZIMUTH PT.** **REPLACE SCREW AFTER USING**
109	Three places on top of fuselage tunnel, Sta 180, 303, and 384. Top of black letters facing left.	**ACCESS DRIVE** **SHAFT COUPLING**
110	Top center of both sides of fuselage, Sta 317. A 2-in. lusterless black circle on the fitting cover.	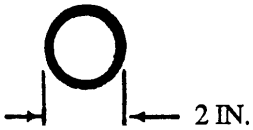
111	Top center of both sides of fuselage at fitting. Stencil to be outboard of fitting, top of black letters facing outboard.	**SPT. PT** **BLADE RACK**
112	Top and bottom of left and right gear box access cover. Top of black letters face aft.	**REMOVE** **GEAR BOX** **ACCESS**
113	DELETED	
114	Top of left and right engine pod drive shaft fairing. Top of black letters facing aft.	**ACCESS** **DRIVE SHAFT**
115	On top of left and right nacelle on access plate. Top of black letters facing aft.	**ACCESS** **OIL FILTER**
116	Two places on top of left and right nacelle. Aft of oil filler access and fwd of circular hole in fairing. Top of black letters face aft.	**ACCESS** **ENGINE HOIST**
117	Top of left and right engine nacelle, fwd of tail pipe. Top of black letters facing outboard, arrows to point aft.	**NO STEP** **OR HAND HOLD**
118	On top sides of fwd and aft rotor blade rain shield. Paint rain shield lusterless black (overspray rain shield). Apply stencils 120° apart, 3 places on each rain shield. This stencil is located outboard of each rotor blade pitch link cutout hole.	**NO STEP**

Figure 9-10. Exterior Markings, CH-47 (Sheet 25 of 29)

CODE NO.	DIRECTIONS	WORDING
119	DELETED	
120	Bottom centerline of fuselage. One place on front lower section of nose area. Two places on nose at mirror support brackets. 1/2-in. black letters.	**MIRROR SPT PT**
121	Bottom of fuselage, right side, at sta 98.0. 1/4-in. black letters.	**XMSN OIL DRAIN**
122	Bottom of fuselage at drain lines, black letters.	**DRAIN OPEN**
123	Left side of fuselage, bottom of acft. sta 187, 1/4-in. black letters.	**BATTERY DRAIN**
124	On aft loading ramp emergency escape panel. 1-1/2 in. black band around push button	
125	DELETED	**MAGNETIC PLUG**
126	DELETED	
127	DELETE	
128	Centered on nose panel, above door catch black letters.	**ACCESS**
129	DELETE	

Figure 9-10. Exterior Markings, CH-47 (Sheet 26 of 29)

CODE NO.	DIRECTIONS	WORDING
130	DELETED	
131	With ARC-102 antenna installed, 7 places besides antenna standoffs, black letters.	**NO HANDHOLD**
132	On lower cockpit windshield, curves around upper side slip port, black letters.	**HIGH TEMP #1 SIDE SLIP DANGER** **DO NOT PLUG OR DEFORM HOLES**
133	On lower cockpit windshield, curves around lower side slip port. Aircraft black letters on a transparent background. **NOTE** Area around static port must be smooth and clean.	**DO NOT PLUG OR DEFORM HOLES** **HIGH TEMP #2 SIDE SLIP DANGER**
134	Outboard side of fwd pylon work platform when platform is open. Facing aft, black letters.	**MAX WEIGHT** **400 LBS**
135	On left and right fwd pylon work platform. 5 places, facing outboard on outboard side, facing aft on fwd and aft sides. Black letters.	**NO STEP**
136	On aft work platform one facing fwd, one facing aft black letters.	**MAX WEIGHT** **400 LBS**
137	On work platform. 6 places, 2 facing inboard, 2 facing outboard, 1 facing fwd, and 1 facing aft black letters.	**NO STEP**
138	Engine work platform area. On side of fuselage when engine work platform is open. Between Sta 502 and 518, WL -2.50 black letters.	**MAX WEIGHT — 400 LBS** **ON WORK PLATFORM**

Figure 9-10. Exterior Markings, CH-47 (Sheet 27 of 29)

CODE NO.	DIRECTIONS	WORDING
139	DELETED	
140	DELETED	
141	DELETED	
142	DELETED	
143	Both sides of fwd fuselage, 1/2-in. black letters, sta 72, WL -19.	**CAUTION** WHEN INSTALLING DOOR REFER TO TM 1-1520-240-23&P FOR PROPER INSTALLATION AND ADJUSTMENT
144	Left side aft pylon, 1/2-in. aircraft black letters, sta 472, WL 73.	**LS ENGINE XMSN FILTER AND DRAIN ACCESS**
145	Left side fuselage, below Code 52, paint aircraft black. **NOTE** Date shown on stencil is date aircraft was painted with MIL-DTL-64159 or MIL-DTL-53039	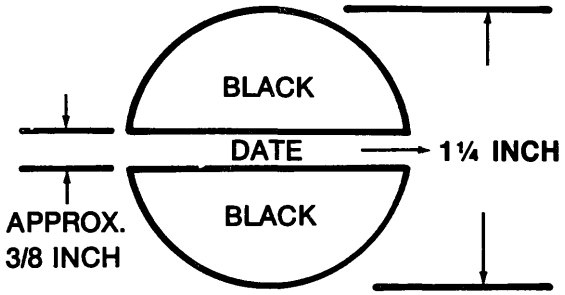
146	Left side fuselage, 1/2-in. black letters, sta 157.50, WL -14.	**GROUND TEST CONNECTION FLIGHT CONTROL SYSTEM 1 3000 PSI USE HYDRAULIC FLUID MIL-H-83282**
147	Both sides fuselage, 1/2-in. black letters, sta 173, WL -15.	**ACCESS AC-DC POWER EQPT**
148	Right side fwd pylon, 1/2-in. aircraft black letters, sta 153, WL 72.	**ACCESS HYDR RESERVOIR**
149	Both sides fuselage, 1/2-in. black letters, sta 245, WL -13.	**ACCESS LANDING GEAR SERVICE**
150	Both sides of pylon, 1/2-in. aircraft black letters, sta 490.5, WL 81.5.	**ACS HYDR RSVR INSP**

Figure 9-10. Exterior Markings, CH-47 (Sheet 28 of 29)

CODE NO.	DIRECTIONS	WORDING
151	Both sides of aft pylon inside reservoir cooler access covers, 1/2-in. aircraft black letters.	**REMOVE BONDING JUMPER WHEN DOOR IS TO BE REMOVED INSTALL BONDING JUMPER WHEN INSTALLING DOOR**
152	Both sides aft pylon, 1/2-in. aircraft black letters, sta 525.80, WL 84.50.	**ACCESS HYDRAULIC COMPARTMENT**
153	Both sides of aft pylon, 1/2-in. aircraft black letters, sta 613.70, WL 102.0.	**FRAGILE ANTENNA DO NOT PUSH**
154	Right side aft fuselage, 1/2-in. aircraft black letters, sta 565.25, WL 15.50.	**GROUND TEST CONNECTION FLIGHT CONTROL SYSTEM 2 UTILITY HYDRAULIC SYSTEM, REFER TO TM 1-1520-240-23–1 USE HYDRAULIC FLUID MIL-H-83282**
155	Both engine cowlings, fwd of screened air intake, 1/2-in. aircraft black letters, sta 486, WL 46.	**ACCESS ENGINE QUICK DISCONNECTS**
156	Right side aft pylon, 1/2-in. aircraft black letters, sta 472, WL 73.	**RS ENGINE XMSN FILTER AND DRAIN ACCESS**
157	Right side aft pylon, 1/2-in. aircraft black letters, sta 505, WL 27.	**ACCESS HYDR COOLING FANS**
158	Front of aircraft, 1/2-in. aircraft black letters, center, WL 41.	**NO HAND HOLD**
159	Bottom of fuselage, both sides, 1/2-in. aircraft black letters, sta 434, 368, 233, BL 53.	**FUEL DRAIN - VENT**
160	Both sides of fuselage, 1/2-in. aircraft black letters, sta 395, 267, 194, BL 53.	**FUEL DRAIN**
161	Sta 98 on the right side under fuselage area.	**HYD SEAL DRAIN**
162	Sta 204 bottom of fuselage left side.	**TUNNEL DRAIN**
163	0.50 in. high capital block letters centered under the 145S3918–3 doubler, both sides of fuselage below engine.	**ENGINE AFT MOUNT LINK ADJ FIXTURE**
164	Sta 110 on left underside of the fuselage area.	**INSTR AIR DRAINS**

Figure 9-10. Exterior Markings, CH-47 (Sheet 29 of 29)

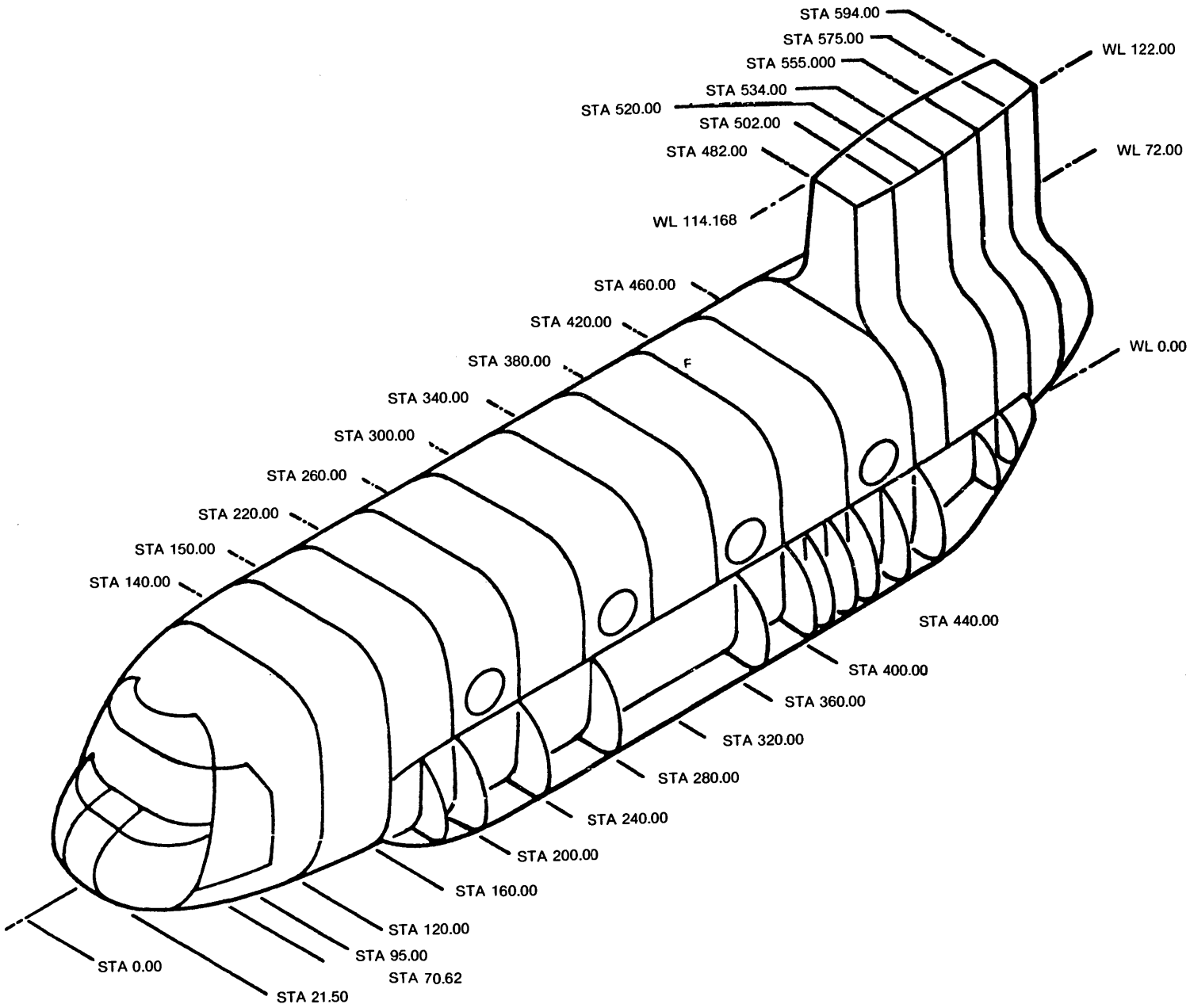

Figure 9-11. Station Diagram, CH-47.

SECTION IV DELETED

Pages 9-86 through 9-100 and Figures 9-12 through 9-16 have been deleted

SECTION V DELETED

Pages 9-102 through 9-108 and Figures 9-17 through 9-20 have been deleted

SECTION VI OH-58 ILLUSTRATIONS

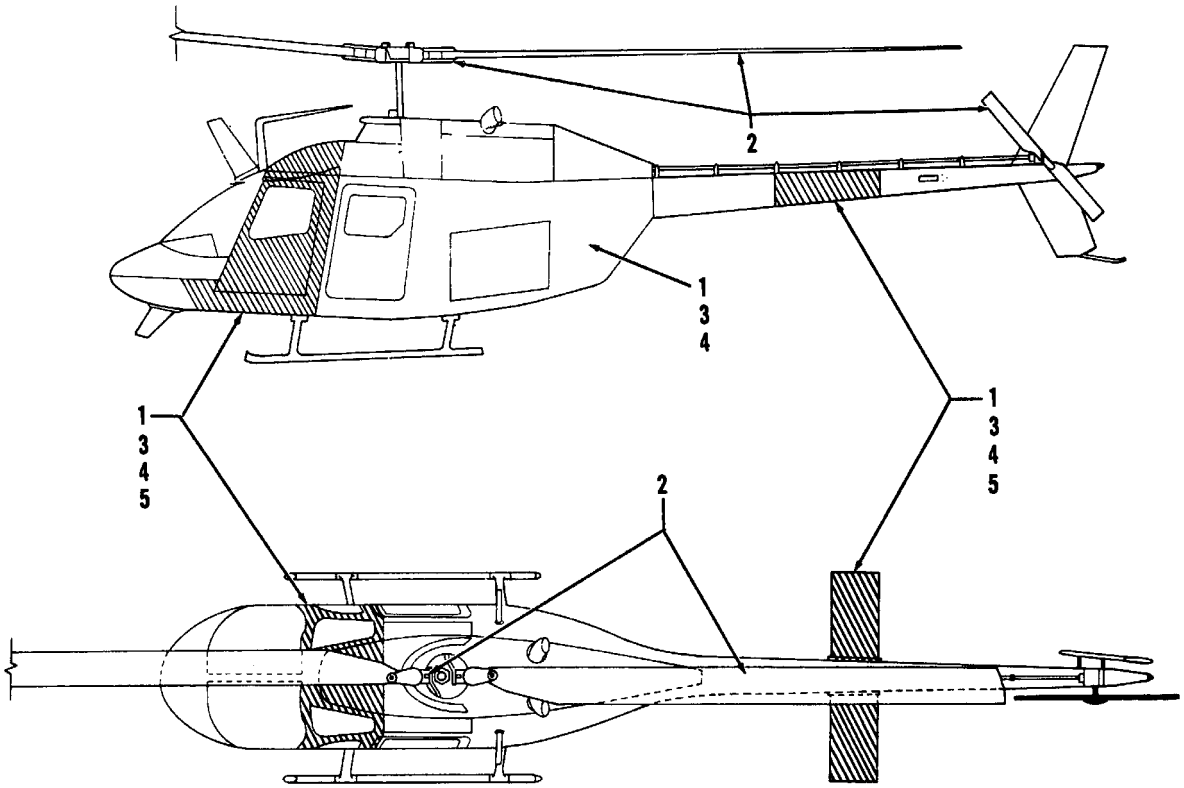

1. MIL-DTL-64159 or MIL-DTL-53039, Aircraft Green (entire aircraft, except as noted).
2. MIL-DTL-64159 or MIL-DTL-53039, Aircraft Black.
3. MIL-DTL-64159 or MIL-DTL-53039, Dark Sand (entire aircraft or high conspicuous paint scheme when authorized, desert operations only). See Paragraph 5-11.
4. MIL-DTL-64159 or MIL-DTL-53039, Aircraft White (entire aircraft or high conspicuous paint scheme when authorized, arctic operations only). See Paragraph 5-11.
5. MIL-P-21600, Fluorescent Red-Orange. ANA #633 (training aircraft-high visibility, only where authorized).

Figure 9-21. Tactical Paint Scheme, OH-58

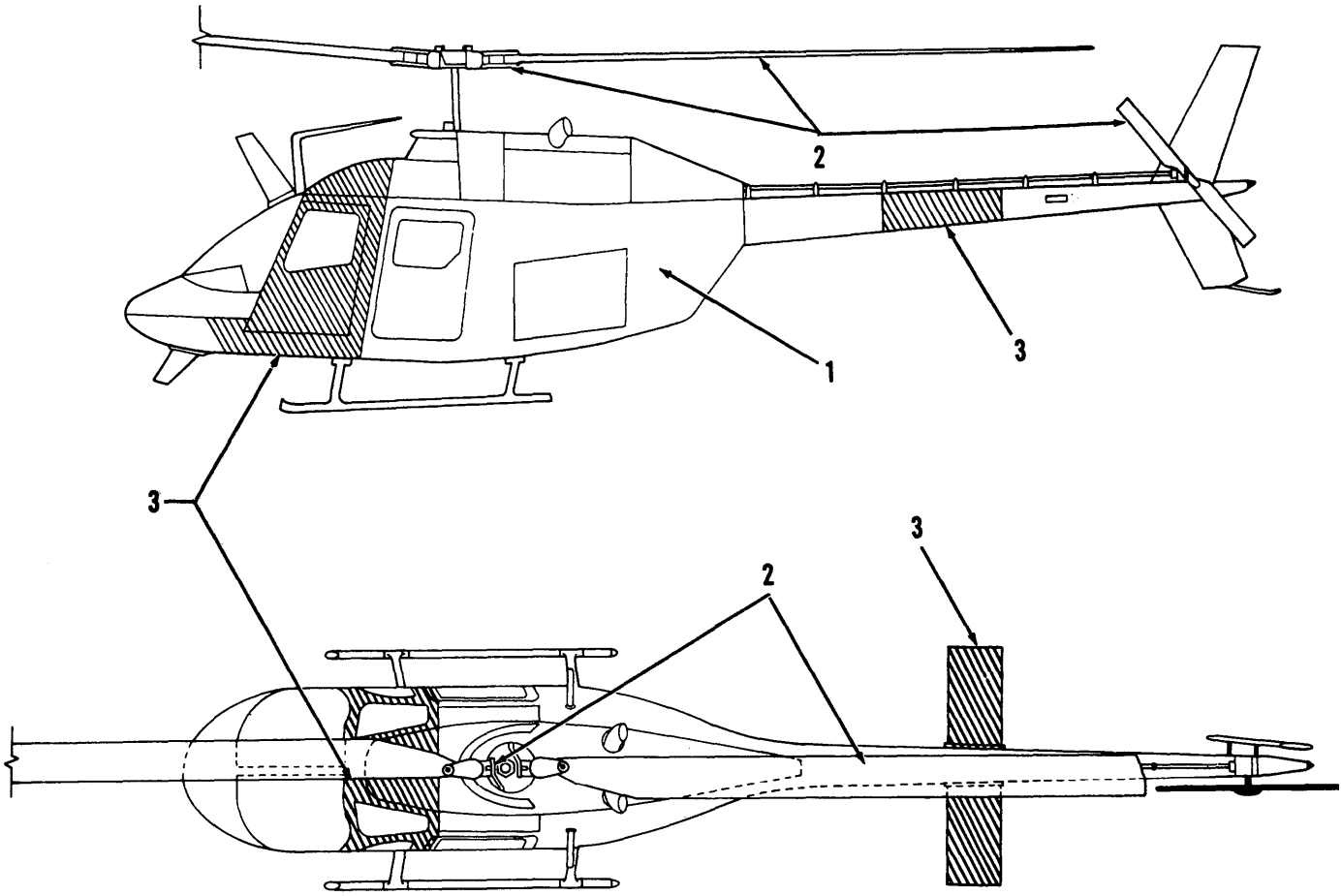

1. MIL-DTL-64159 or MIL-DTL-53039, aircraft green (entire aircraft, except as noted).
2. MIL-DTL-64159 or MIL-DTL-53039, aircraft black.
3. MIL-P-21600, fluorescent red-orange, ANA #633 (shaded areas only).

Figure 9-22. Non-Tactical Arctic/Desert Paint Scheme, OH-58

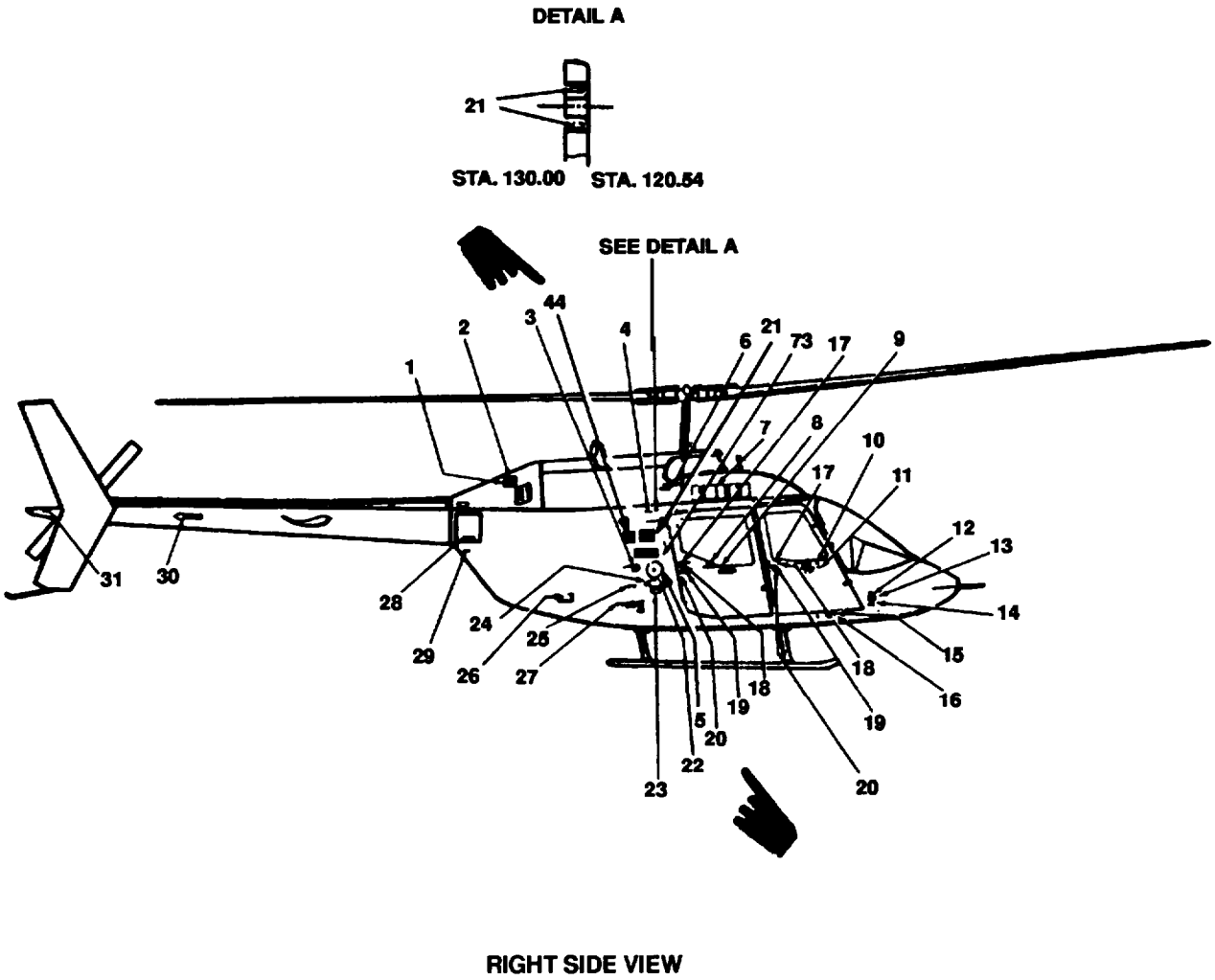

Figure 9-23. Interior and Exterior Markings, OH-58 (Sheet 1 of 13).

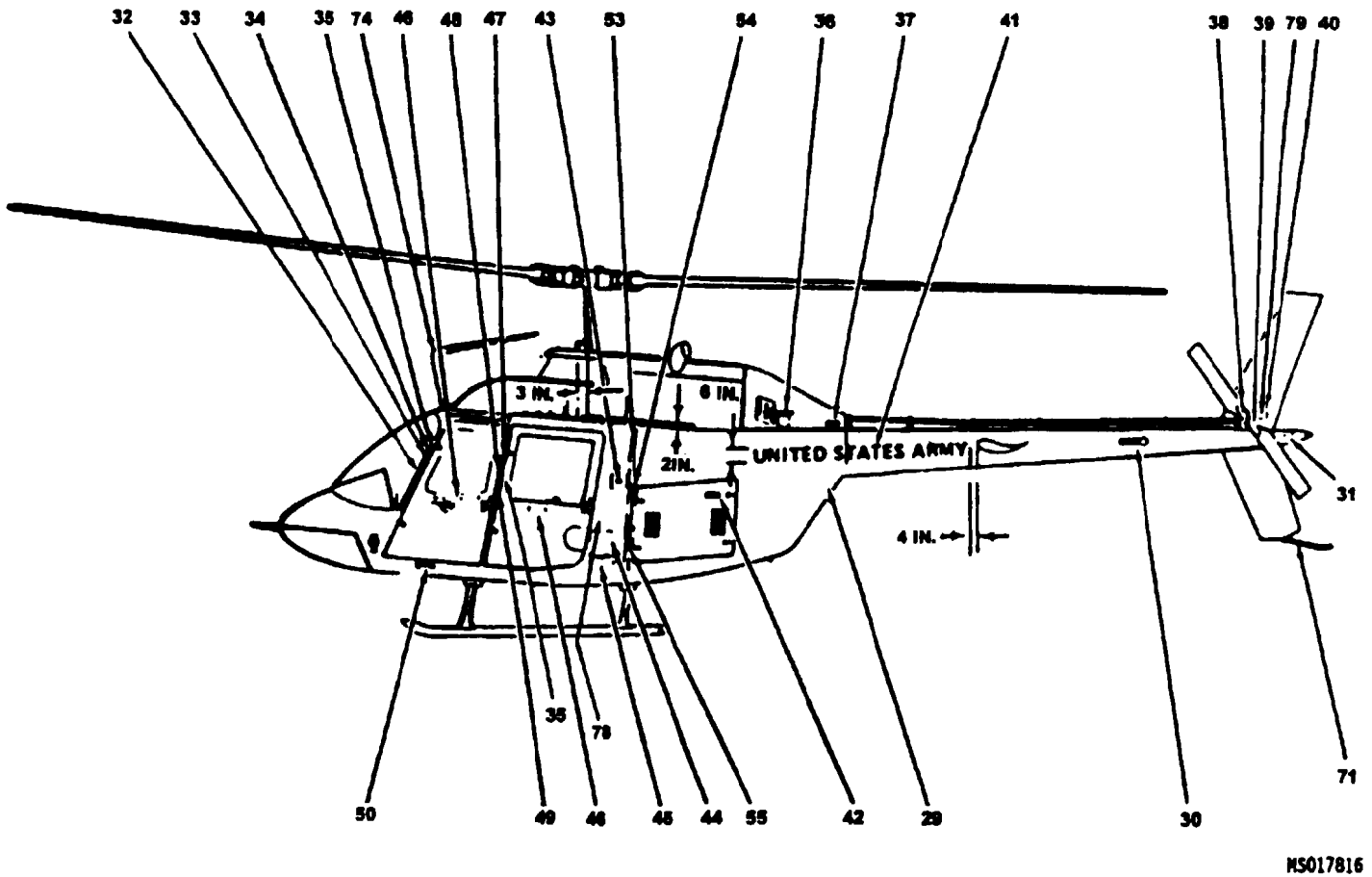

Figure 9-23. Interior and Exterior Markings, OH-58 (Sheet 2 of 13).

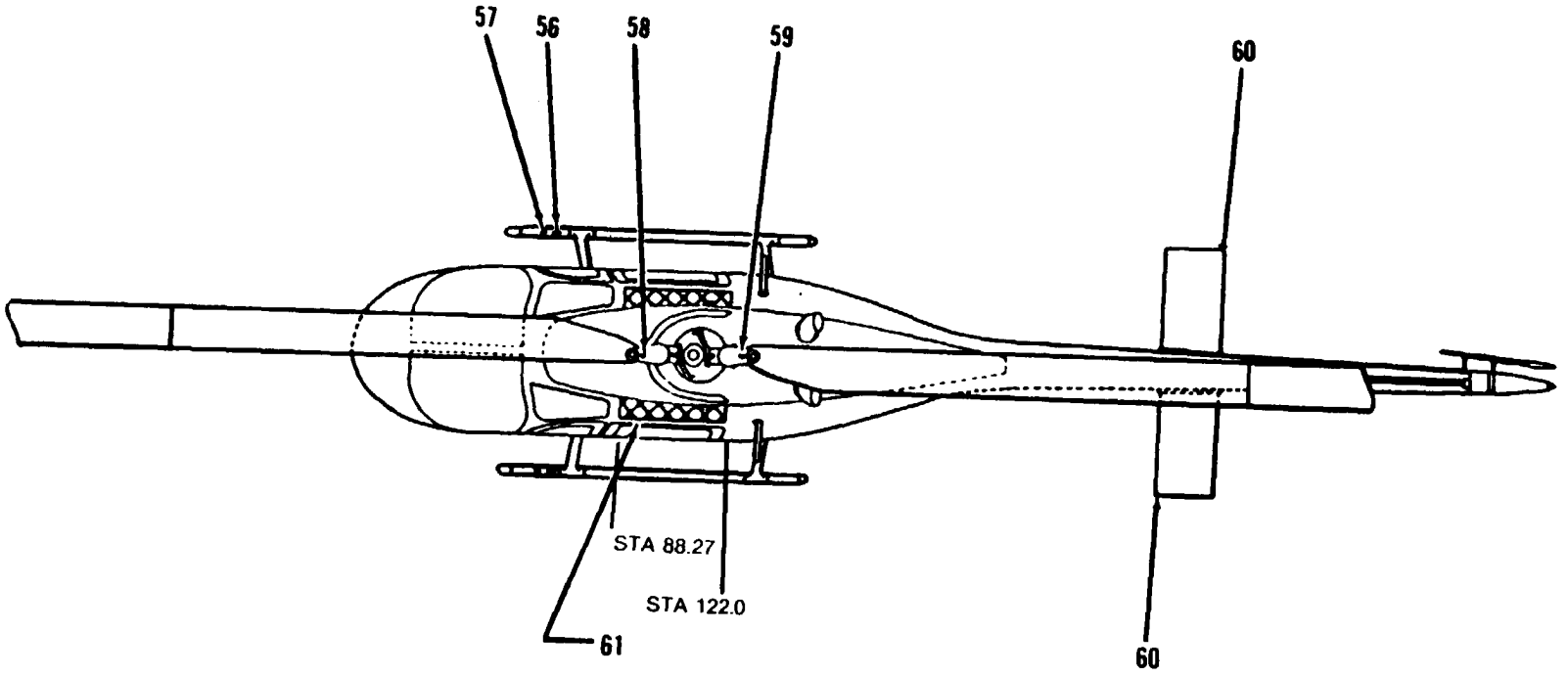

Figure 9-23. Interior and Exterior Markings, OH-58 (Sheet 3 of 13).

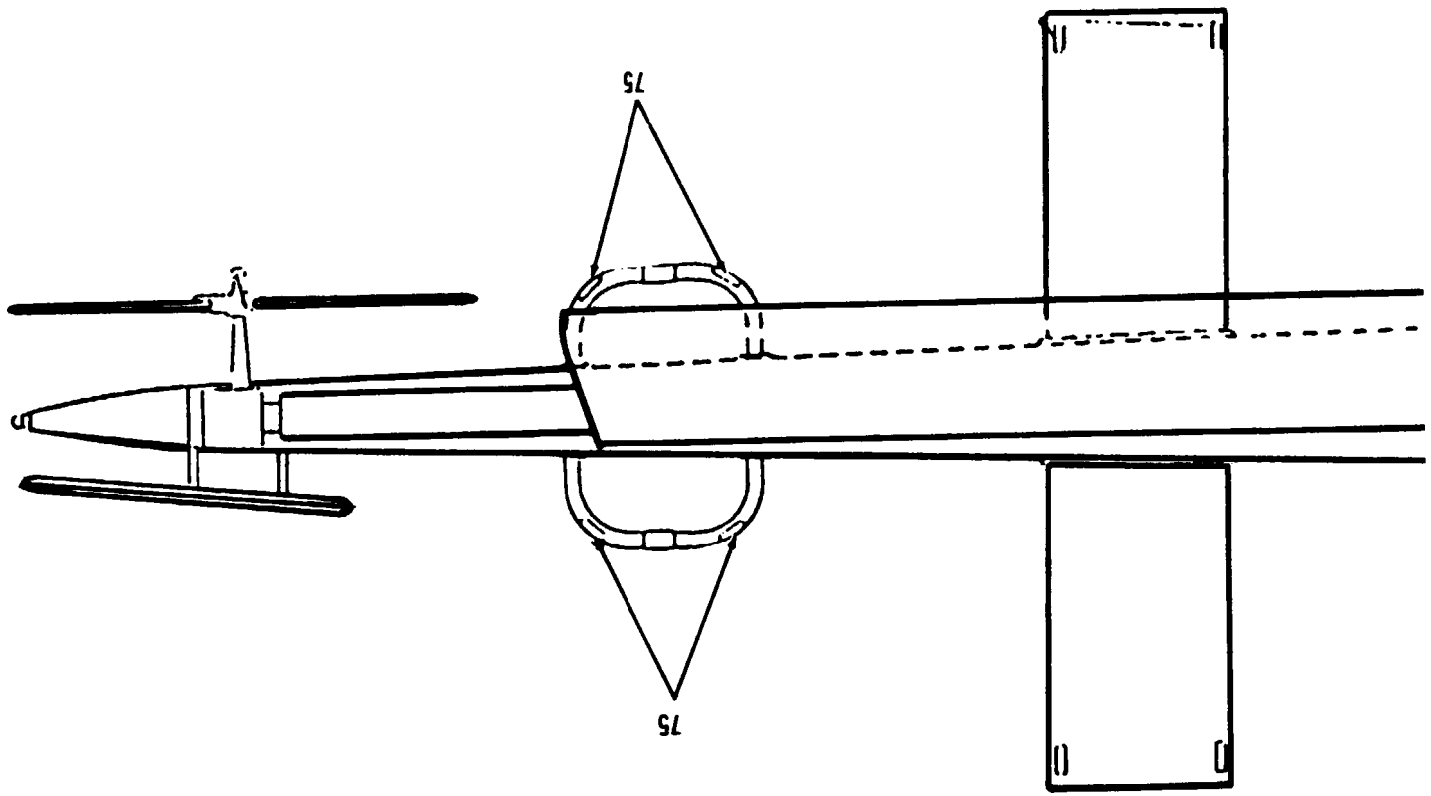

Figure 9-23. Interior and Exterior Markings, OH-58 (Sheet 4 of 13).

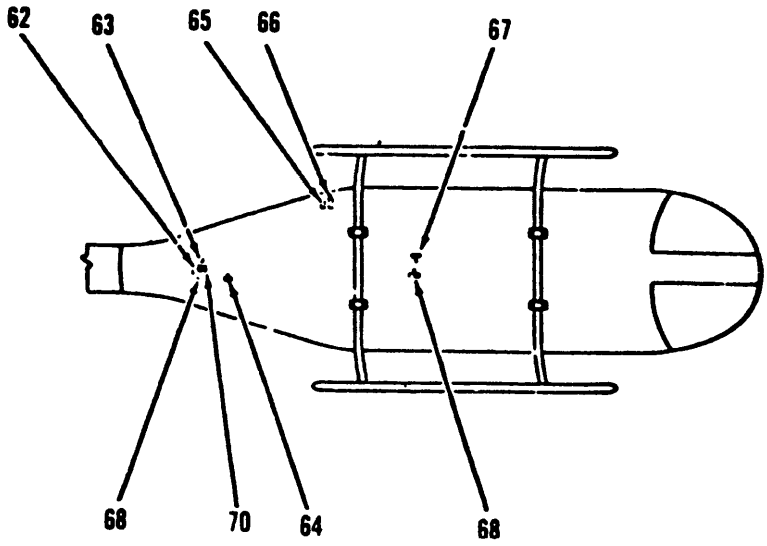

BOTTOM VIEW

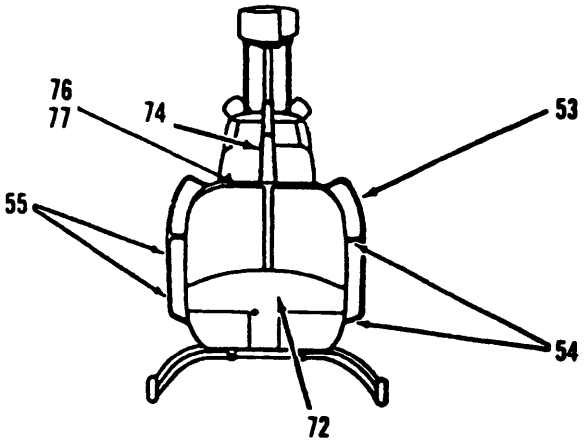

FRONT VIEW

Figure 9-23. Interior and Exterior Markings, OH-58 (Sheet 5 of 13)

CODE NO.	DIRECTIONS	WORDING
1	Right side, aft of engine compartment on aft fairing. 5/8-in. MIL-DTL-64159 or MIL-DTL-53039 aircraft black, #37038 letters.	ENGINE OIL ABOVE 25°F MIL-L-23699 BELOW 25°F MIL-L-7808
2	Right side, above Code 1. 5/8-in. aircraft black letters.	ENGINE OIL FILLER CAP ACCESS
3	Paint a black ground symbol, shade 37038, dimensions per MIL-C-83413/9-2.	
4	Below forward edge of engine cowl side panel, right side. 5/8-in. aircraft black letters.	CABIN ROOF DRAIN
5	Paint fuel .ller cap same color as the fuselage. Paint a 1 inch wide ring around filler aircraft black. 1 inch ring to be 2 inch from cap center.	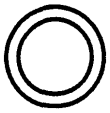
6	Right side below right air intake screen. 5/8-in. aircraft black letters, OH-58A, C and D. OH-58D(I) see NOTE in wording.	TRANSMISSION OIL LEVEL ACCESS ABOVE - 25°F MIL-L-23699 BELOW - 25°F MIL-L-7808 **NOTE** TRANSMISSION OIL LEVEL ACCESS ABOVE - 40°F DOD-L-85734 BELOW -40°F MIL-L-7808
7	Locate on both sides fwd fairing, 2 1/2 in. above roof skin and 3 in. fwd of mast centerline. 6 in. high and 4 in. wide aircraft black letters with 1 in. spacing between letters.	(RADIO CALL NUMBER)
8	Inside both passenger doors. 5/8-in. MIL-DTL-64159 or MIL-DTL-53039, aircraft white #37875 letters.	OPEN
9	Inside both passenger doors. 5/8-in. aircraft white letters.	CLOSED
10	Inside of both crew doors. 5/8-in. aircraft white letters.	OPEN
11	Inside of both crew doors. 5/8-in. aircraft white letters.	CLOSED
12	Above static ports, both sides of fuselage. 3/8-in. aircraft black letters.	DO NOT PLUG OR DEFORM HOLES

Figure 9-23. Interior and Exterior Markings, OH-58 (Sheet 6 of 13)

CODE NO.	DIRECTIONS	WORDING
13	Both side of helicopters, a 5/8 inch wide band with a 2-5/8 inch outside diameter, aircraft black.	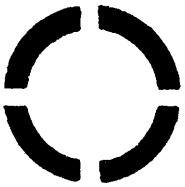
14	Below static port, both sides. 3/8-in. aircraft black letters.	STATIC PORT
15	Both sides of aircraft, fwd of sta 55.16 on lower side, aircraft black.	JACK POINT
16	Both sides of aircraft, fwd of sta 55.16 near jack points aircraft black.	MOOR
17	Exterior on fwd and aft doors, above door handles, both sides of fuselage. 1-3/8 in. aircraft black letters.	EXIT RELEASE
18	Exterior on fwd and aft doors, below door handles, both sides of fuselage. 1-3/8 in. aircraft black letters.	TURN
19	Exterior on fwd and aft doors, below door handles, both sides of fuselage. 1-3/8 in. aircraft black letters.	PULL
20	Exterior on fwd and aft doors, below door handles, both sides of fuselage. Aircraft black letters.	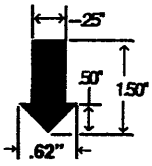
21	On back of panel, right side of aircraft, above fuel filler. 5/8-in. orange-yellow letters.	STRUCTURAL PANEL REQUIRED FOR GROUND RUN AND FLIGHT
22	On right side of aircraft, below fuel filler cap. 5/8 in. aircraft black letters.	CAP .71.5 U.S. GAL USE MIL-T-5624 GRADE JP-4 or JP-5. If not available refer to TB 55-9150-200-24 for alternate fuel

Figure 9-23. Interior and Exterior Markings, OH-58 (Sheet 7 of 13)

CODE NO.	DIRECTIONS	WORDING
23	On right side of aircraft, below fuel filler cap. 1/4-in. aircraft black letters.	FOR OPERATING TEMPERATURES BELOW 40°F O.A.T., FUEL USED MUST CONTAIN PFA 55MB ADDITIVE. CONCENTRATION TO BE .06% - .15% BY VOLUME
24	On right side of aircraft, below and aft of fuel filler cap. NATO refueling symbol aircraft black.	NATO CODE NO. MAX FILLING PRESSURE 125 PSI 8.8 Kg/cm2
25	Right side of aircraft aft and below fuel filler, above external power receptacle. 5/8 in. aircraft black letters.	BATTERY VENT
26	Right side of aircraft on external power door. 1/2 in. aircraft black letters.	EXTERNAL POWER
27	AFT of external Power Receptacle.	
28	Located on interior and exterior of tail boom inspection plate. 5/8-in. aircraft black letters.	STRUCTURAL PANEL REQUIRED GROUND RUN AND FLIGHT
29	Both sides of aircraft fwd of tail boom on intermediate section. 5/8-in. aircraft black letters.	NO PUSH
30	OH-58A. On both sides of tail boom, centerline 19 in. aft of stabilizer. OH-58C. 15-in. aft of stabilizer, aircraft black letters and arrows.	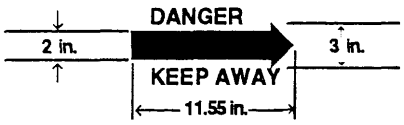
31	Both sides of tail cone, 5/8 inch aircraft black letters.	NO PUSH
32	Locate on inside door post in two places both sides of aircraft. 5/8in. orange-yellow letters.	EMERGENCY RELEASE
33	Below jettison handles, both sides. Inside on door posts, 1-in. aircraft white letters.	PULL

Figure 9-23. Interior and Exterior Markings, OH-58 (Sheet 8 of 13)

CODE NO.	DIRECTIONS	WORDING
34	Below jettison handles on pilot and copilot door posts. Aircraft white arrows pointing aft.	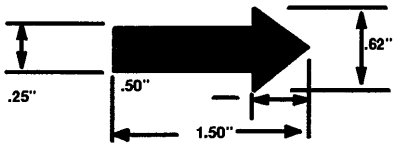
35	Paint both jettison handles inside of aircraft with 1/8 inch wide alternate orange-yellow and black stripes.	
36	Left side of aircraft, aft of air louvers, on aft fairing. 5/8 in. aircraft black letters.	OIL TANK DRAIN ACCESS
37	Aft end of aft fairing, both sides. 5/8 in. aircraft black letters.	CAUTION DISCONNECT ELECTRICAL WIRING BEFORE REMOVING TAIL BOOM.
38	0.30 in. diameter dot on one end of tail rotor yoke, corresponding end of crosshead and corresponding pitch link assembly. Paint MIL-DTL-64159 or MIL-DTL-53039 aircraft red, #31136.	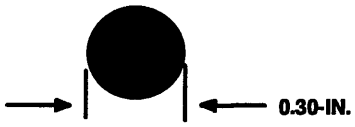
39	0.30 in. diameter dot on one end of tail rotor yoke, corresponding end of crosshead and corresponding pitch link assembly. Paint MIL-DTL-64159 or MIL-DTL-53039 aircraft white, #37875.	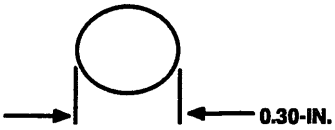
40	Left side of vertical fin, adjacent to tail rotor gear box. 5/8-in. aircraft black letters, 0.38 in. space between lines, OH-58A, C and D. OH-58D(I) see NOTE in wording.	SERVICE GEAR BOX MIL-L-23699 ABOVE - 25°F MIL-L-7808 BELOW - 25°F **NOTE** ABOVE - 40°F DOD-L-85734 BELOW- 40°F MIL-L-7808
41	Both sides of Tail Boom, most AFT letter (Y-left side U-right side) to be 4.0 inch forward of stabilizer. Letters centered on center line of tail boom. Letters to be 6 in. high aircraft black #37038. Additional dimensions and spacing in accordance with Fig. 8-2.	UNITED STATES ARMY
42	Left side of aircraft, upper aft corner of avionics compartment door. 5/8-in. aircraft black letters.	BATTERY ACCESS
43	Left side of aircraft, on small door forward of the RF antenna and above the Avionics compartment door. 5/8 inch aircraft black letters.	STEP

Figure 9-23. Interior and Exterior Markings, OH-58 (Sheet 9 of 13)

CODE NO.	DIRECTIONS	WORDING
44	Left side of aircraft, aft of passenger door. First two lines 1-in. aircraft black letters. Remainder 1/2-in. letters. **NOTE** Transfer data to right side of helicopter above the fuel filler cap when MWO 55-1520-228-50-53, ATS, has been applied.	U.S. ARMY OH-58A U.S.A. SERIAL NO. (Insert serial no.) Service this aircraft with MIL-T-5624 Grade JP-4 aviation fuel
45	Left side of aircraft, lower fuselage, fwd of antenna. 1/2-in. aircraft black letters.	IF NOT AVAILABLE REFER TO TB 55-9150-200-24 FOR ALTERNATE FUEL
46	Interior, center on crew and passenger doors. 1-in. orange-yellow letters.	EMERGENCY EXIT
47	Interior of aircraft on passenger door post, below upper hinges. Paint aircraft white arrows pointing fwd.	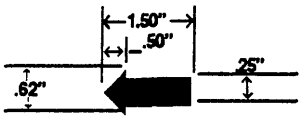
48	Interior of aircraft on passenger door posts, below upper hinges. 5/8 inch aircraft white arrow pointing fwd.	PUSH
49	Interior of aircraft on passenger door posts, below upper hinges. Tops of letters pointing forward. 1-3/8-in. orange-yellow letters.	EMERGENCY RELEASE
50	Lower left and right sides of aircraft, below crew doors. Aircraft black arrows pointing down at jack points.	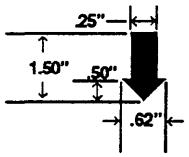
51		
52		

Figure 9-23. Interior and Exterior Markings, OH-58 (Sheet 10 of 13)

CODE NO.	DIRECTIONS	WORDING
53	Outside surface of left and right antennas. To be read from fwd side of antennas. 5/8-in. letters. MIL-DTL-64159 or MIL-DTL-53039, olive drab, #34037 letters on black background. MIL-DTL-64159 or MIL-DTL-53039, Black #37038 letters on aircraft green background.	NO HAND HOLD
54	Center and lower flat areas of left and right antennas. To be read from fwd side of aircraft 5/8-in. MIL-DTL-64159 or MIL-DTL-53039, olive drab #34037 letters in black background. MIL-DTL-64159 or MIL-DTL-53039, black #37038 letters on aircraft green background.	NO STEP
55	Center and lower outboard surface of left and right antennas. To be read from fwd side of aircraft. 5/8-in. letters. MIL-DTL-64159 or MIL-DTL-53039 olive drab #34037 letters on black background. MIL-DTL-64159 or MIL-DTL-53039, black #37038 letters on aircraft green background.	NO PUSH
56	Top side of both landing skids above tow rings. Aircraft black.	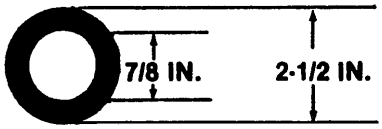
57	Top side of both landing skids above tow rings. 5/8-in. aircraft black letters.	TOW
58	Upper and lower surfaces of main rotor grip and attaching linkage for each grip. 1/2-in. aircraft red dots.	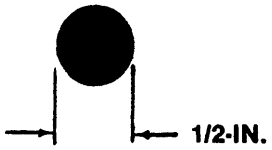
59	Upper and lower surfaces of main rotor grip and attaching linkage for each grip. 1/2-in. aircraft white dots.	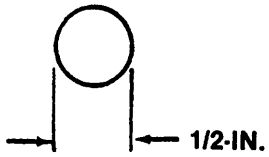

Figure 9-23. Interior and Exterior Markings, OH-58 (Sheet 11 of 13)

CODE NO.	DIRECTIONS	WORDING
60	Leading and trailing edge of stabilizer, both sides 5/8 in aircraft black letters. OH-58C (VOR antenna, right and left side, 4 places). 5/8-in. aircraft black letters.	NO PUSH
61	Apply walkway coating MIL-W-5044, Type II, both sides of aircraft between skin splices at sta 88.27 to 122.0. Paint to match existing color scheme.	
62	Underside of fuselage, on centerline, aft of jack point 5/8-in. aircraft black letters.	JACK POINT
63	Underside of fuselage, right of centerline, left of jack point. Aircraft black.	
64	Underside of fuselage, left of centerline, fwd of jack point. 5/8-in. aircraft black letters.	ENGINE OIL TANK DRAIN
65	Underside of fuselage, right side aft of aft cross tube. 5/8-in. aircraft black letters.	ENGINE DECK DRAIN
66	Underside of fuselage, right side aft of aft cross tube. 5/8-in. aircraft black letters.	FUEL CELL VENT
67	Underside of fuselage. Right side of centerline, between cross tubes. 5/8-in. aircraft black letters.	PUMP SEAL DRAIN
68	Underside of fuselage. Left of centerline, between cross tubes. 5/8-in. aircraft black letters.	DRAIN
69	Underside of fuselage. Left of centerline and jack point Aircraft black.	
70	Underside of fuselage, fwd of jack point along centerline, 5/8-in. aircraft black letters.	MOOR
71	Non-tactical aircraft only. Paint tail skid orange.	
72	Approved unit insignia.	

Figure 9-23. Interior and Exterior Markings, OH-58 (Sheet 12 of 13)

CODE NO.	DIRECTIONS	WORDING
73	Immediately above fuel filler cap. 1/2-in. aircraft black letters.	AVOID CONTACT WITH INTERNAL FUEL LINES DURING SERVICING
74	Non-tactical aircraft only. Paint last 6 in. of antenna orange.	
75	OH-58C, center outboard of curved section fwd and aft of left and right antenna. 5/8-in. aircraft black letters.	NO PUSH
76	Aft of fuel shut off lever, 1/2-in. aircraft black letters on aircraft red background.	FUEL OFF
77	Fwd of fuel shut off lever, 1/2-in. aircraft black letters on aircraft red background.	FUEL ON
78	Left side of aircraft, aft of passenger door, above Code 44, paint aircraft black. NOTE: Date shown on stencil is date aircraft painted with MIL-DTL-64159 or MIL-DTL-53039 paint.	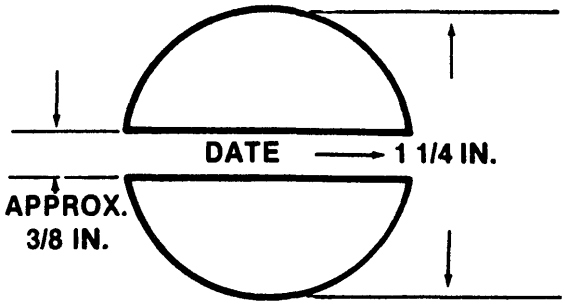
79	Paint tail rotor gear box filler cap, orange-yellow.	

Figure 9-23. Interior and Exterior Markings, OH-58 (Sheet 13 of 13)

CAUTION 3/4 in.

ENSURE SEAT 3/8 in.
BELTS AND
CUSHIONS ARE
FASTENED AND
CLOSE DOORS
ON EXITING

NOTE Use this caution when seat back armor is installed.
Paint MIL-C-46168, orange-yellow, No. 33538.

Figure 9-24. Interior Requirements to be Stenciled on the Back of Pilot's and Co-Pilot's Seat Backs, OH-58A/C (Sheet 1 of 2)

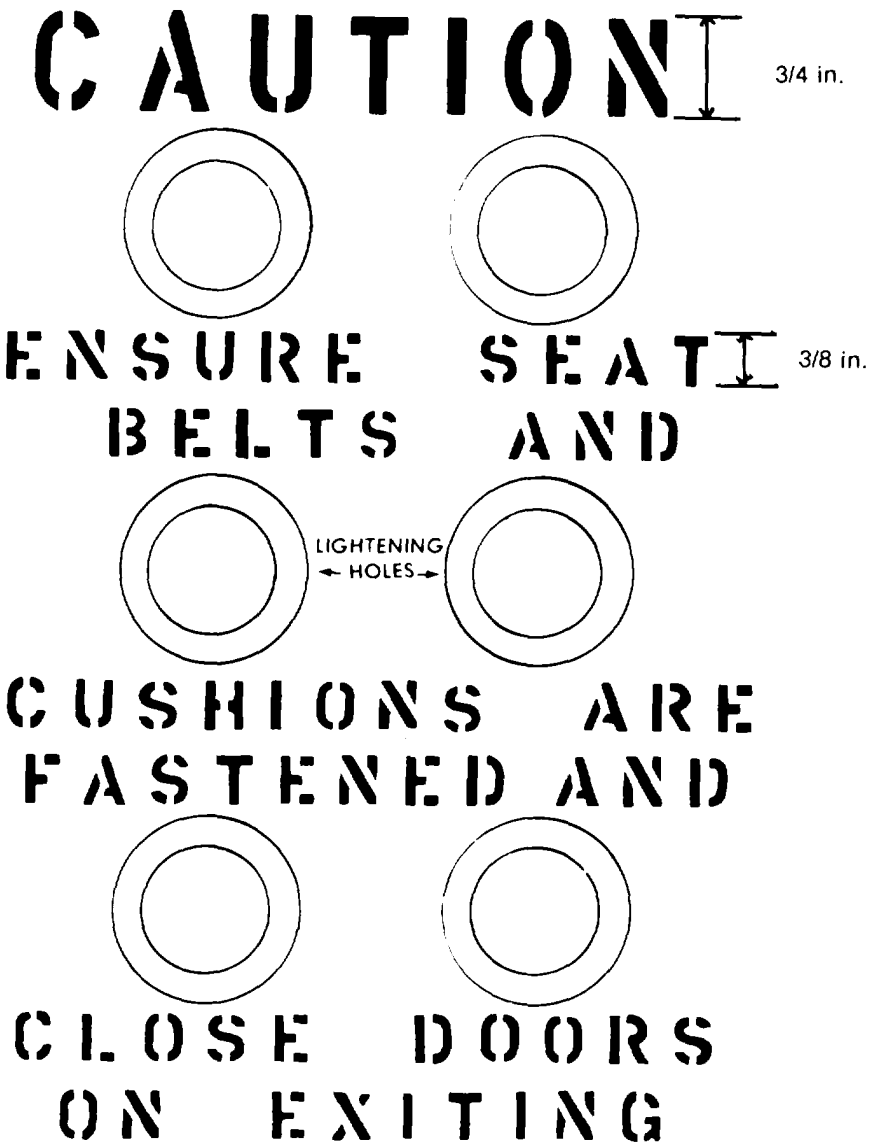

NOTE Use this caution when seat back armor is not installed.
Paint MIL-C-46168, orange-yellow, No. 33538.

Figure 9-24. Interior Requirements to be Stenciled on the Back of Pilot's and Co-Pilot's Seat Backs, OH-58A/C (Sheet 2 of 2)

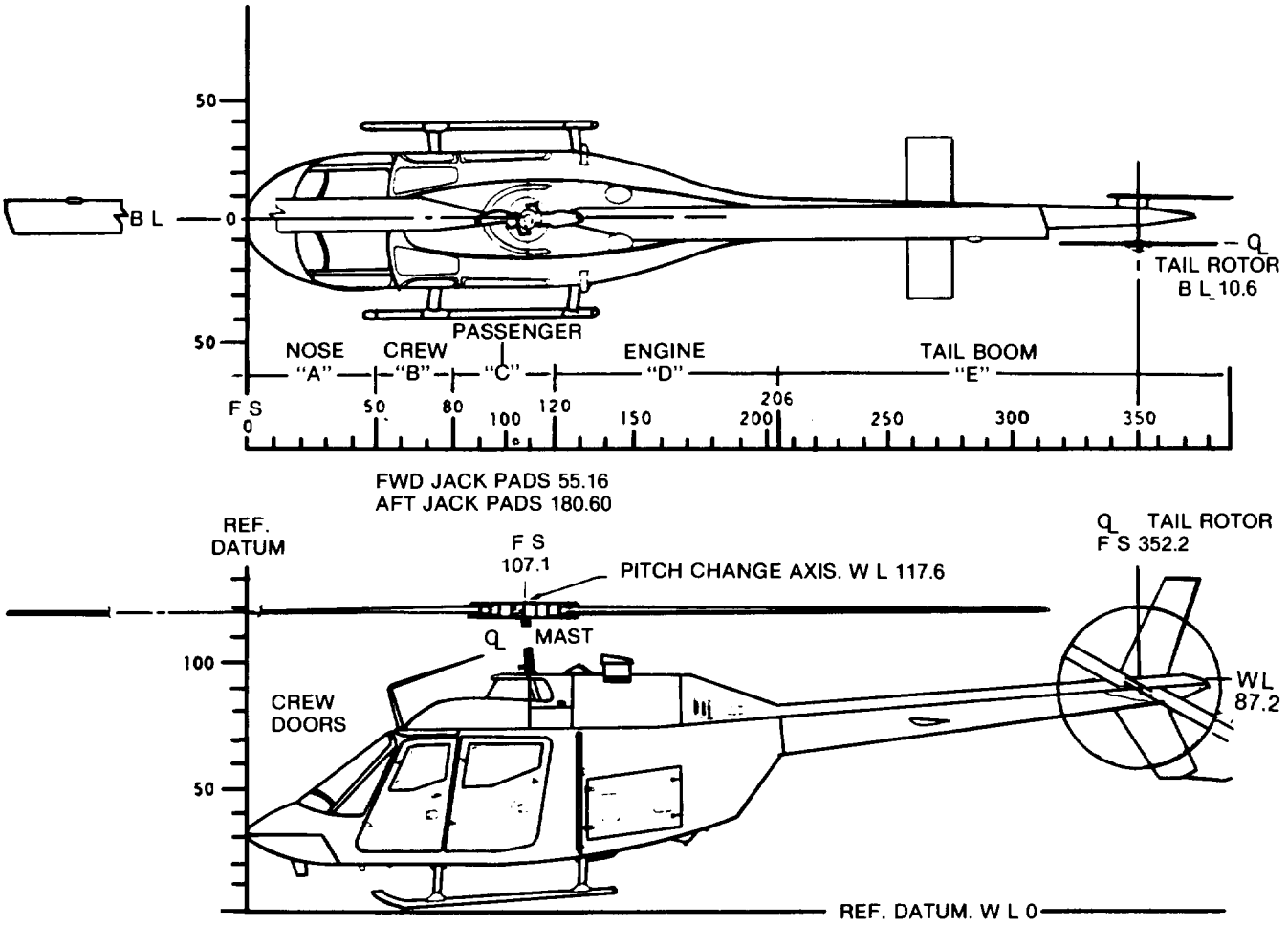

Figure 9-25. Station Diagram, OH-58

SECTION VII DELETED

Figure 9-26 has been deleted.

SECTION VIII DELETED

Pages 9-129 through 9-176.1/(9-176.2 blank) and .g-
ures 9-27 through 9-37 have been deleted.

Figure 9-38 has been deleted.

SECTION IX UH-60 ILLUSTRATIONS

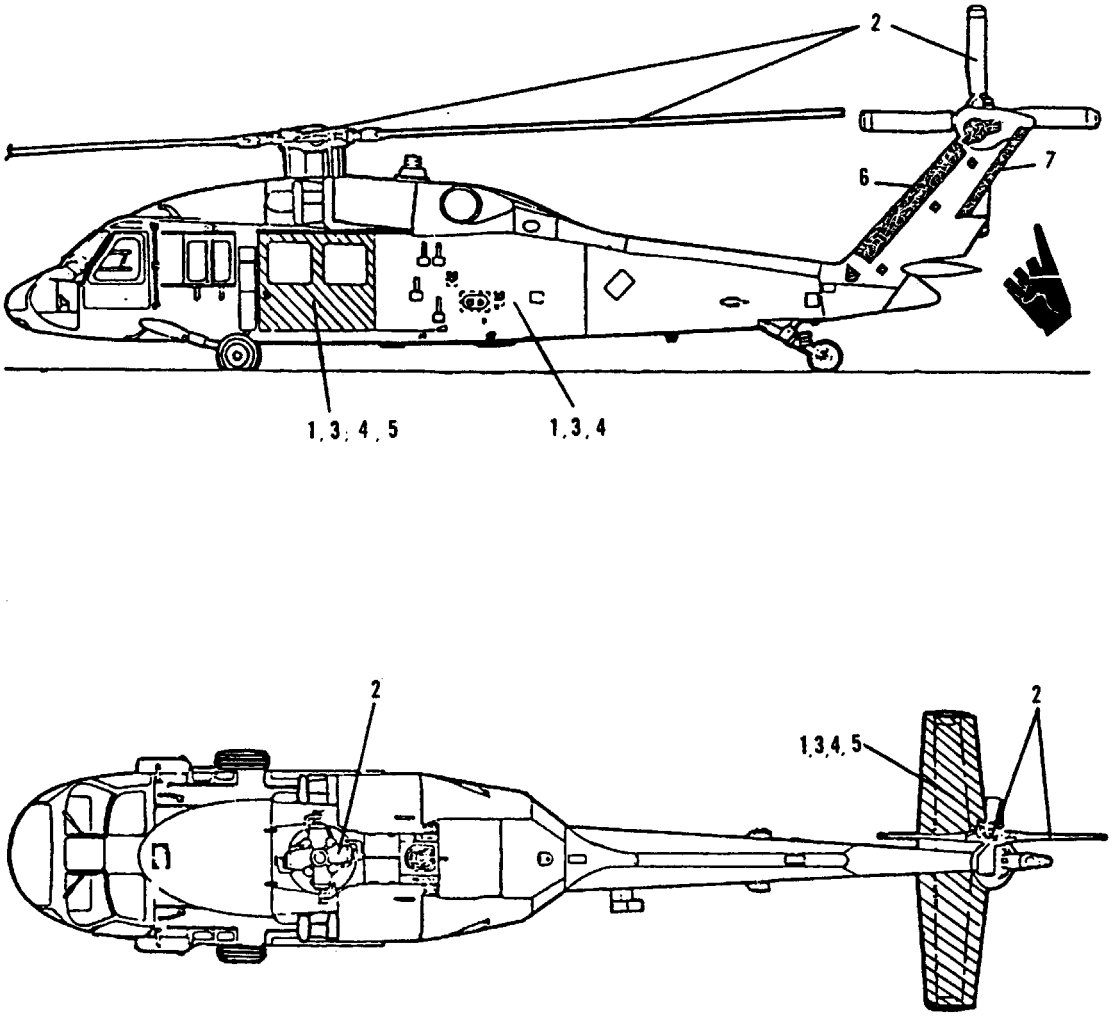

1. MIL-DTL-64159 or MIL-DTL-53039, Aircraft Green (entire aircraft, except as noted).
2. MIL-DTL-64159 or MIL-DTL-53039, Aircraft Black.
3. MIL-DTL-64159 or MIL-DTL-53039, Dark Sand (entire aircraft or high conspicuous paint scheme when authorized, desert operations only). See Paragraph 5-11.
4. MIL-DTL-64159 or MIL-DTL-53039, Aircraft White (entire aircraft or high conspicuous paint scheme when authorized, arctic operations only). See Paragraph 5-11.
5. MIL-P-21600, Fluorescent Red-Orange. ANA #633 (training aircraft-high visibility, only where authorized).
6. MIL-C-83231, CLA TY2, Coating, Rain Erosion Resistant.
7. Do not paint.

Figure 9-39. Tactical Paint Scheme, UH-60

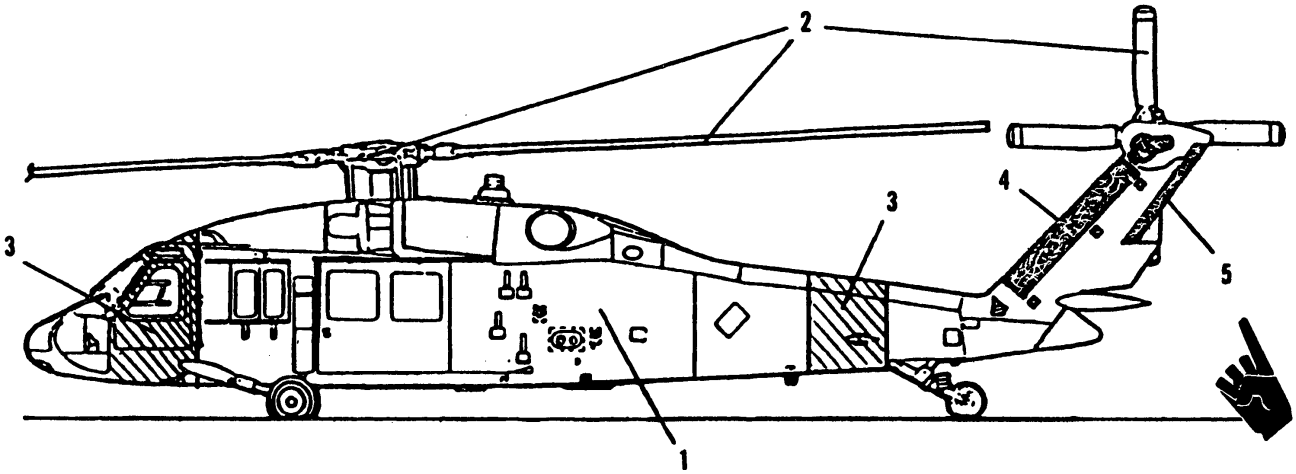

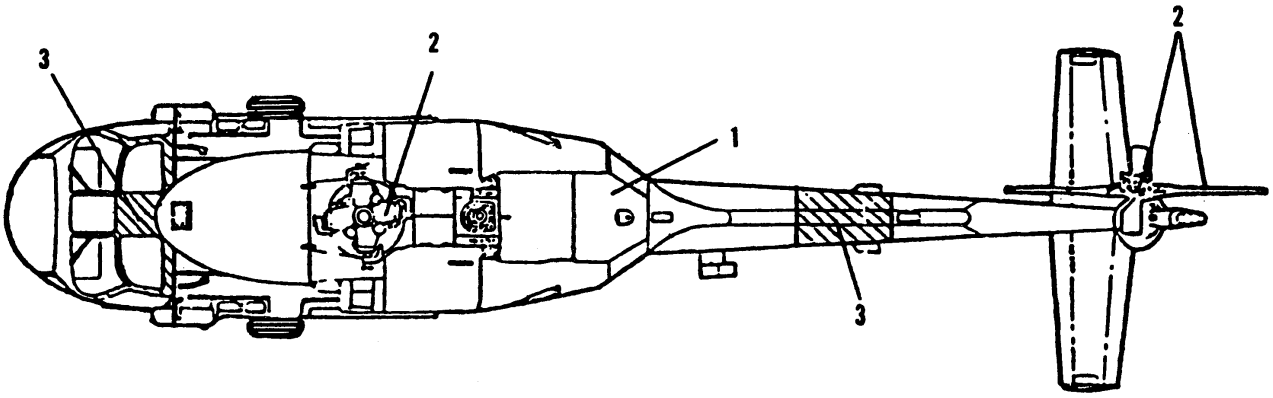

1. MIL-DTL-64159 or MIL-DTL-53039, Aircraft Green (entire aircraft, except as noted).
2. MIL-DTL-64159 or MIL-DTL-53039, Aircraft Black.
3. MIL-P-21600, fluorescent red-orange, ANA #633 (shaded areas only).
4. MIL-C-83231, CLA TY2, Cooling, Rain Erosion Resistant.
5. Do not paint

Figure 9-40. Non-Tactical Arctic/Desert Paint Scheme, UH-60

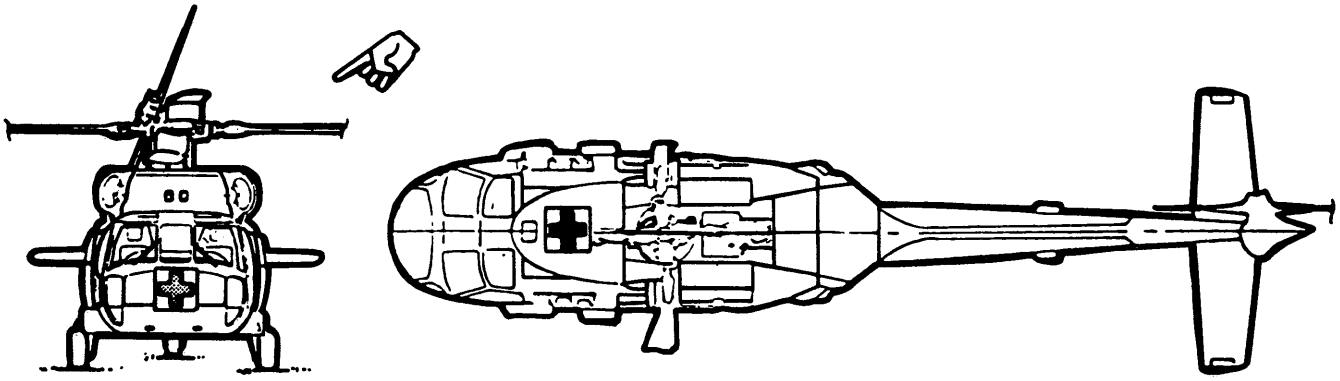

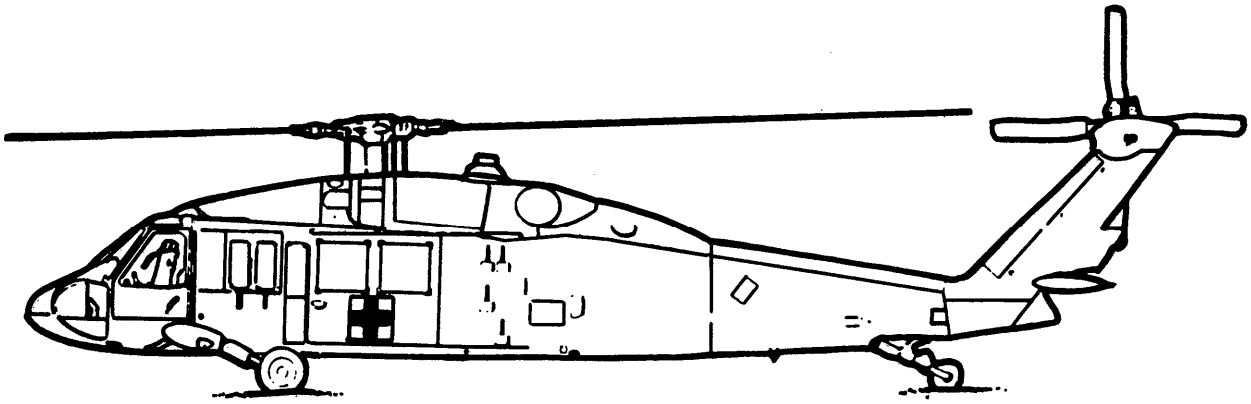

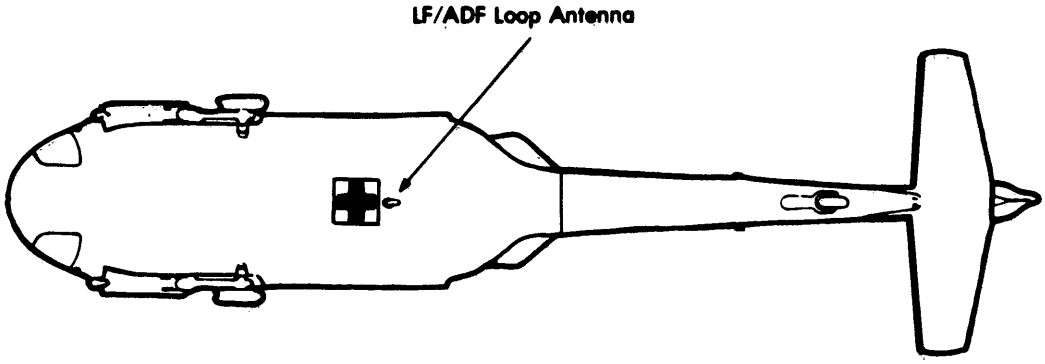

NOTES

1. Fuselage: Same as tactical paint scheme.
2. National insignia: None
3. Red crosses: Size and location approximately as shown.
4. Command and Organizational Insignia: Optional position for Air Ambulance only.

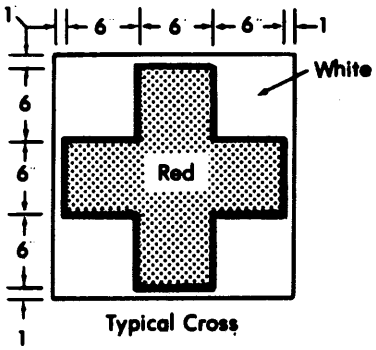

Figure 9-41. Army Medical Service (Ambulance), UH-60

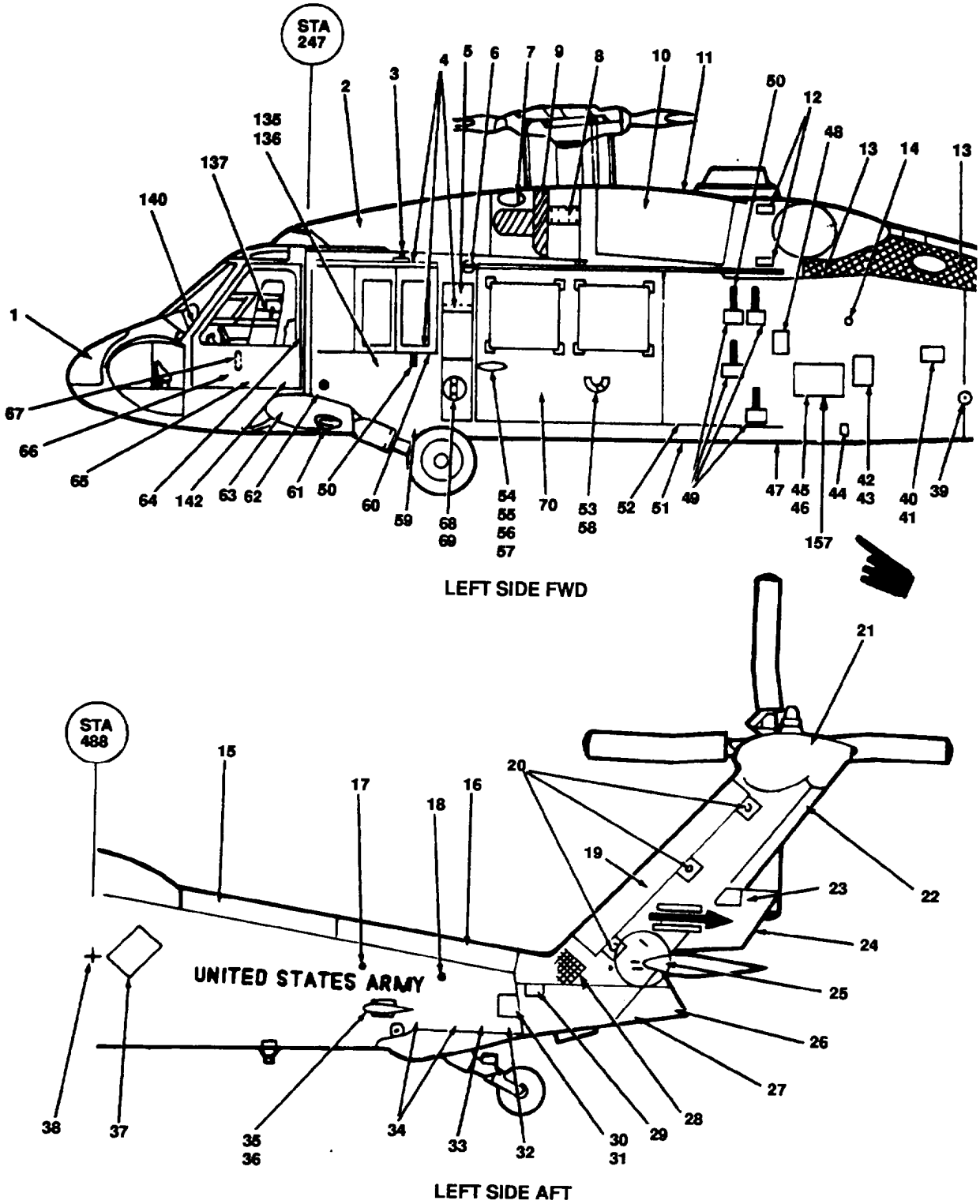

Figure 9-42. Exterior and Interior Markings, UH-60 (Sheet 1 of 20).

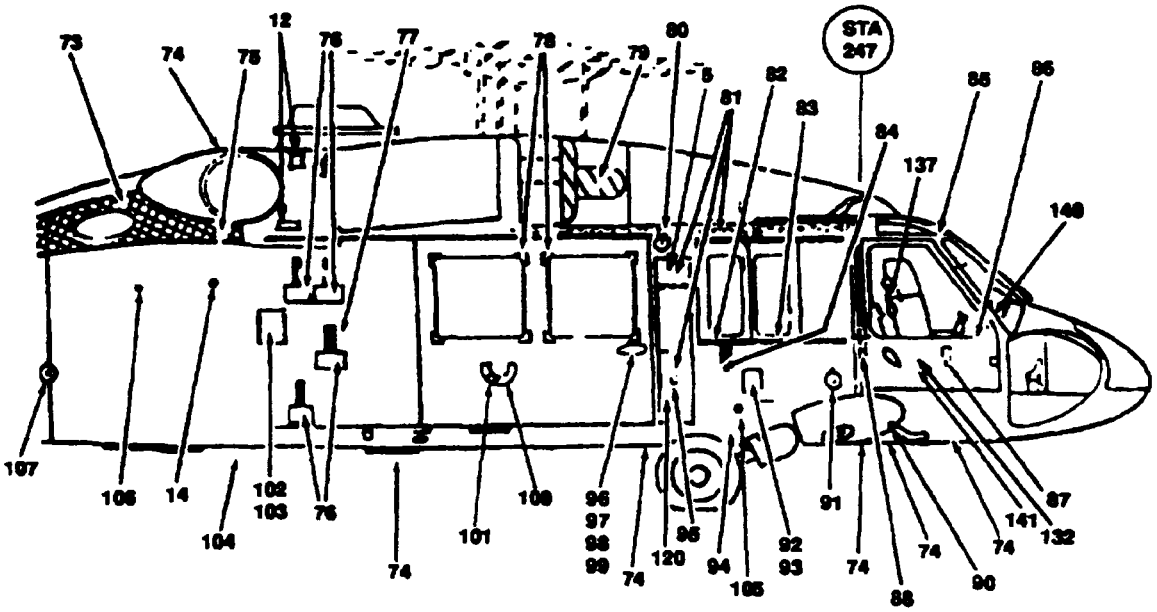

RIGHT SIDE FWD

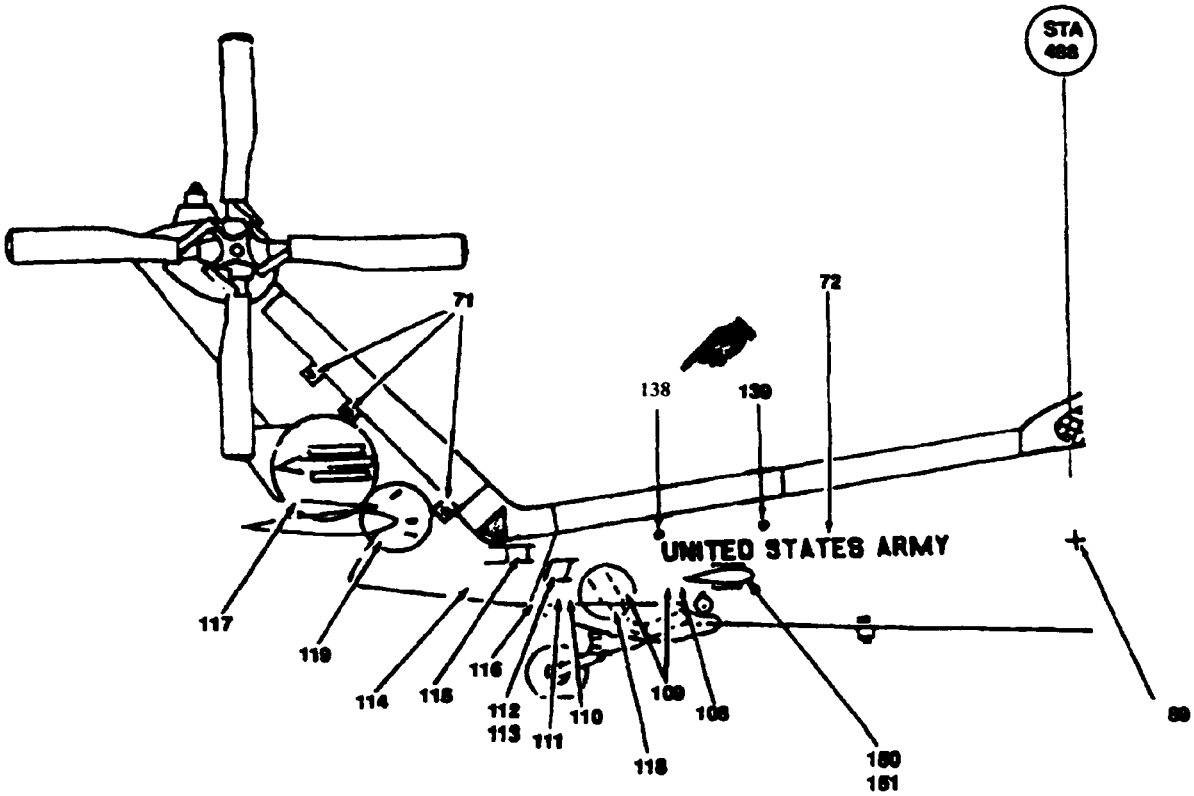

RIGHT SIDE AFT

Figure 9-42. Exterior and Interior Markings, UH-60 (Sheet 2 of 20).

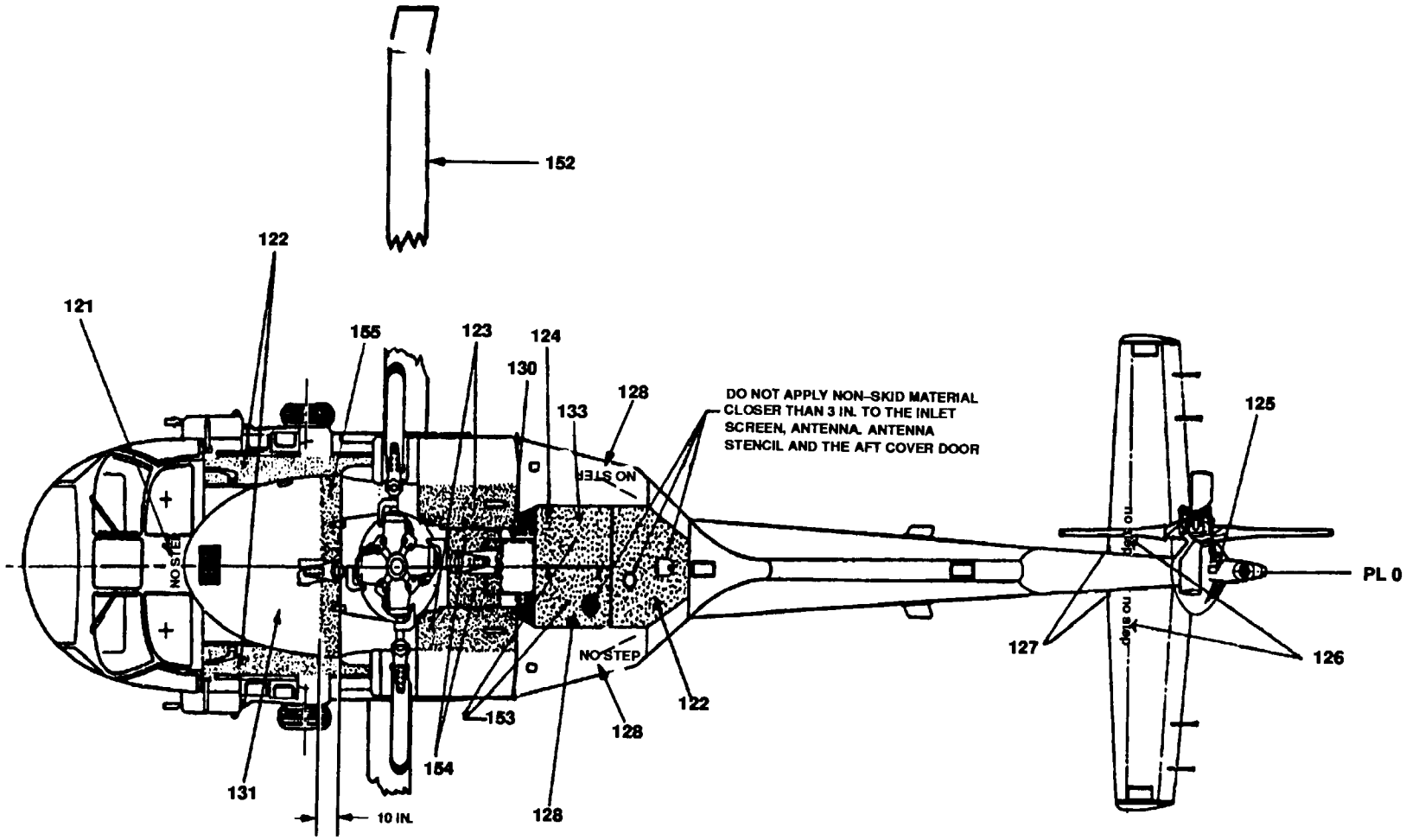

TOP SIDE

Figure 9-42. Exterior and Interior Markings. UH-60 (Sheet 3 of 20).

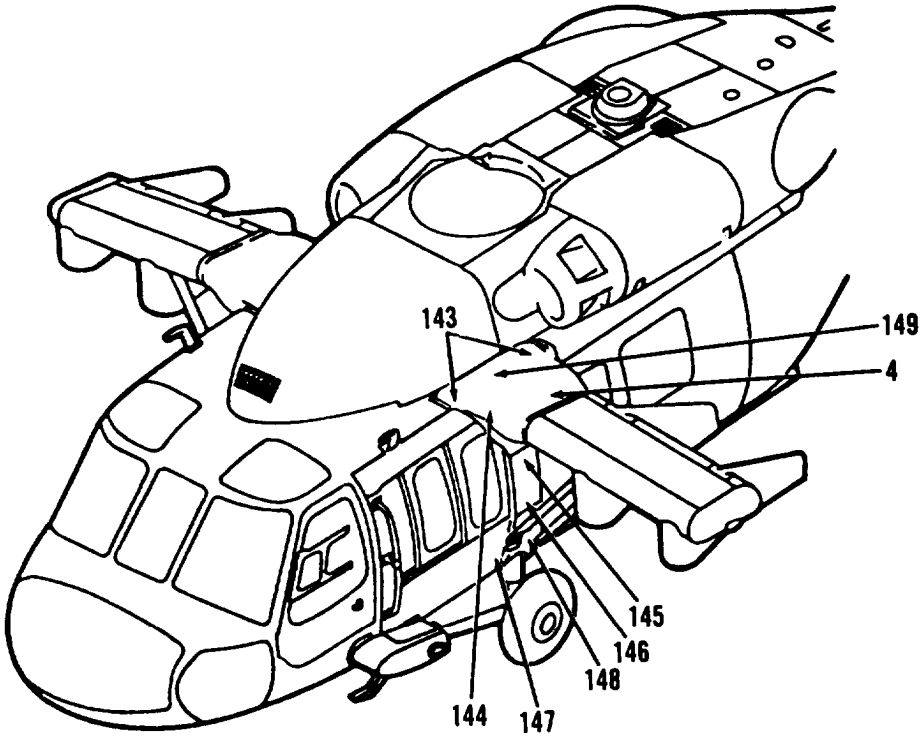

ESSS PECULIAR STENCILS

Figure 9-42. Exterior and Interior Markings, UH-60(Sheet 4 of 20)

CODE NO.	DIRECTIONS	WORDING
1	Top surface of access panel (nose door electronics, hinged) 1/2-in. MIL-DTL-64159 or MIL-DTL-53039, aircraft black, No. 37038, letters.	1B-2B-1
2	Top surface of sliding fairing, M.R.P. controls and accessories, 1/2-in. aircraft black letters.	3T-4T-2
3	Above gunners window, 1/2-in. aircraft black letters.	HAND HOLD
4	Apply non-skid coating to all walkways, steps, and platforms, MIL-W-5044, Type II, paint aircraft black. **NOTE** Step area of gunners window sill, paint MIL-DTL-64159 or MIL-DTL-53039, aircraft interior grey, No. 36231.	
5	Place stencil on air-oil strut access panel and above on fuselage. **NOTE** Do not apply this stencil on aircraft provisioned for ESSS.	3T-3 LH side 4T-4 RH side
6	Above and fwd of cargo door FS 308, WL 261, 1/2-in. aircraft black letters.	
7	Inlet fairing LH side of A/C, 1/2-in. aircraft black letters.	HAND HOLD
8	Top surface access panel anti-icing valve, and above on fuselage, 1/2-in. aircraft black letters.	3T-5 LH side 4T-6 RH side
9	Engine inlet duct (cross hatching zone). Do not block any slots or holes. Do not paint anodized areas. Paint aircraft black.	
10	Engine cowl hinged (engine) 1/2-in. aircraft black letters.	3T-7 LH side 4T-8 RH side
11	LH top surface of oil cooler access panel, 1/2-in. olive drab No. 34087, letters, MIL-DTL-64159 or MIL-DTL-53039.	3T-25

Figure 9-42. Exterior and Interior Markings, UH-60 (Sheet 5 of 22)

CODE NO.	DIRECTIONS	WORDING
12	LH and RH module station 412, 2 places, 1/2-in. aircraft black letters.	HAND HOLD
13	Below LH engine exhaust and APU exhaust, 1-in. MIL-DTL-64159 or MIL-DTL-53039, olive drab, No. 34087, letters. **NOTE** Below LH engine use 1 in. MIL-DTL-64159 or MIL-DTL-53039, aircraft black letters. No 37038 letters on HIRSS equipped aircraft.	DANGER EXHAUST
14	Both sides of transition fuselage FS 435, WL 246, aircraft black. (See paragraph 7-28 for dimensions.)	
15	LH access panel drive shaft, 1/2-in. aircraft black letters.	5T-6T-9
16	LH access panel drive shaft, 1/2-in. aircraft black letters.	5T-6T-10
17	Dot at FS 585, WL 227, approximately, MIL-DTL-64159 or MIL-DTL-53039 aircraft red, No. 31136.	• .75 DIA
18	Dot at FS 625, WL 227, approximately, blue, No. 35044.	• .75 DIA
19	Pylon D.S. covers NHF-FM No. 1 antenna, 1/2-in. MIL-DTL-64159 or MIL-DTL-53039, olive drab, No. 34087, letters.	5T-6T-11
20	Left side of pylon near pylon steps, 3 places, 1/2-in. aircraft black letters.	PUSH AND TURN TO RELEASE
21	Near gear box fairing and light support, 1/2-in. aircraft black letters.	5T-6T-12
22	Stencil for troop commander antenna 1/2-in. olive drab letters.	5T-6T-13
23	Access panel above upper actuator attach. 1/2-in. aircraft black letters.	5T-14
24	Pylon trailing edge, 1/2-in. aircraft black letters.	5T-6T-15

Figure 9-42. Exterior and Interior Markings, UH-60 (Sheet 6 of 22)

CODE NO.	DIRECTIONS	WORDING
25	Aft pylon call out for stabilizer degrees, 1/2 in aircraft black letters.	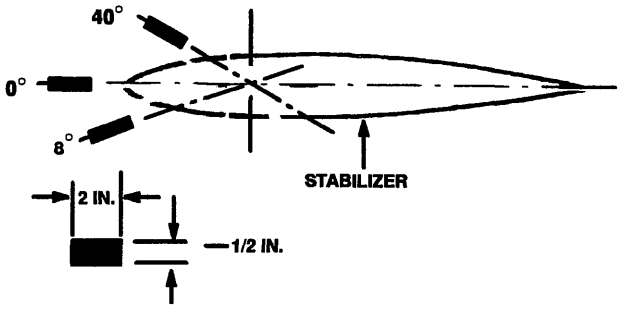
26	Lower pylon, 1/2-in. aircraft black letters.	5B-6B-16
27	Lower aft section of tail rotor pylon, FS 680, WL 218 approximately. The word CAUTION to be 1-in. aircraft black letters, remainder 1/2-in. aircraft black letters.	CAUTION GROUND STRAP INSIDE DETACH DURING REMOVAL
28	Gear box access cover, 1/2-in. aircraft black letters.	5T-6T-17
29	Near pylon fold, 1/2-in. aircraft black letters.	WARNING DISCONNECT ELECTRICAL HYDRAULICS AND CONTROLS BEFORE FOLDING
30	Tail cone just fwd of access panel, FS 640, WL 224, 1/2-in. aircraft black letters.	STRUCTURAL ACCESS PANEL MUST BE FITTED BEFORE FLIGHT
31	Structural access panel and above on fuselage, 1/2-in. aircraft black letters.	5T-5B-18
32	Tail cone lower fuselage, FS 640, 1/2-in. aircraft black letters.	TIRE PRESSURE 115-125 PSI
33	Tail cone lower aft section, FS 635, 1/2-in. aircraft black letters.	UTILITY MAINT. LIGHT RCPT. BLO
34	Tail cone fuselage above and aft of the tie down ring, 1/2-in. aircraft black letters. 2 places.	JACKING POINT
35	Top of antenna, 1-in. olive drab letters.	NO STEP
36	Top side of VOR/LOC antenna, 1/2-in. olive drab letters.	5B-5T-19

Figure 9-42. Exterior and Interior Markings, UH-60 (Sheet 7 of 22)

CODE NO.	DIRECTIONS	WORDING
	NOTE	
	Aircraft equipped with CMWS, replace with 1 1/4-in black letters. No .ares.	
37	Tail cone fwd section center stencil between FS 501 and FS 503, 1/2-in. aircraft black letters.	PROVISION FOR CHAFF DISPENSER
38	LH side of A/C, FS 488, WL 232, aircraft black.	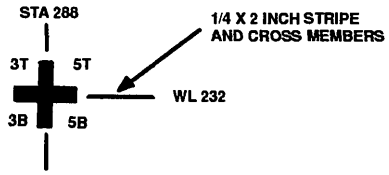
39	Locate stencil at FS-485 above tie down ring, 1/2-in. aircraft black letters.	
40	Transition fuselage cover, FS 467, WL 229, 1/2-in. aircraft black letters.	ACCESS COVER MAG FLUX VALVE
41	Access cover and above on fuselage, 1/2-in. aircraft black letters.	3B-3T-20
42	Transition fuselage above access cover, FS 446, WL 223, 1/2-in. aircraft black letters.	
43	Access cover, 1/2-in. aircraft black letters.	3T-3B-21
44	Transition fuselage section adjacent to fuel vent drain, 1/2-in. aircraft black letters.	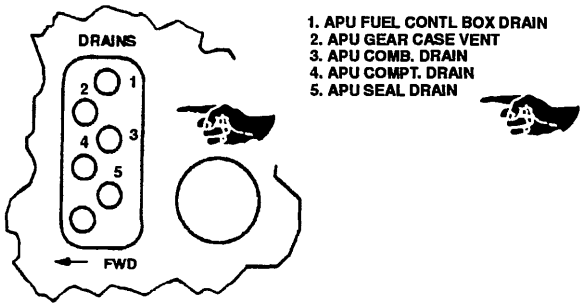
45	Access cover pressure/closed circuit refueling cap, 1/2-in. aircraft black letters.	
46	Below code 45, 1/2-in. aircraft black letters.	3T-3B-23

Figure 9-42. Exterior and Interior Markings, UH-60 (Sheet 8 of 22)

CODE NO.	DIRECTIONS	WORDING
47	Bottom side of access door, FS 421, BL 5, 1/2-in. aircraft black letters.	FUEL SUMP DRAIN
48	Transition fuselage aft of top fuselage step, 1/2-in. aircraft black letters.	FUEL FILLER CAP FUEL FILLER CAP 181 GALS J P 8 FUEL MS038426
49	Apply non-skid coating to all walkways, step and platforms. Paint aircraft black.	
50	Stencil all step areas as shown, aircraft black stripe.	9" 2" LOCATE ON RIGHTHAND AND LEFTHAND SIDE OF AIRCRAFT
51	Adjacent to drain at FS 390, WL 204, LH and RH side of aircraft. 1/2-in. aircraft black letters.	2 1 FWD OUTBD 1. ENG SUMP DRAIN ENG SWIRL/FRAME DRAIN ENG COMPT DRAIN ENG COMMON DRAIN ENG SEQ VALVE DRAIN 2. ENG COMB CHANBER
52	Bottom side of cargo hook access cover, 1/2-in. aircraft black letters.	4B-24
53	LH interior cargo door just below emergency handle, orange-yellow arrow and 1/2-in. letters.	EMERGENCY EXIT PULL AFT
54	Exterior LH cargo door, near horizontally oriented handle (old) or vertically oriented handle (new), 1/2-in. aircraft black letters.	LOCKED CLOSED OPEN OR OPEN CLOSED & LOCKED

Figure 9-42. Exterior and Interior Markings, UH-60 (Sheet 9 of 22)

CODE NO.	DIRECTIONS	WORDING
55	Interior LH cargo door, near horizontally oriented handle (new) or vertically oriented handle (old), 1/2-in. aircraft black letters.	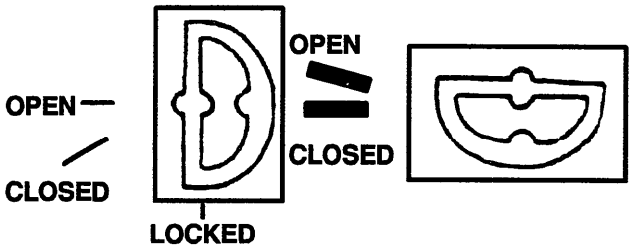
56	Paint LH interior cargo door handle aircraft black.	
57	Near LH cargo door handle (old), both interior and exterior of door, 1/2-in. aircraft black letters.	HANDLE MUST BE IN 'CLOSED' POSITION BEFORE CLOSING DOOR
58	Stencil 1/8-in. wide aircraft black stripes and 3/4-in. wide orange-yellow stripes in LH cargo door window emergency jettison handle recess.	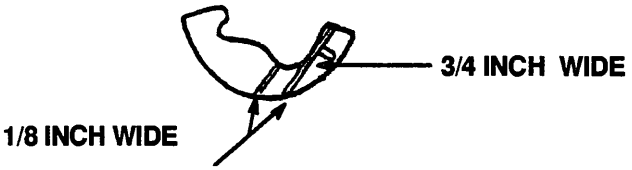
59	Cabin, FS 290, WL 206, 1/2-in. aircraft black letters.	TIRE PRESSURE 130/140 PSI
60	Gunner's window sill, FS 290, 1/2-in. aircraft black letters.	STEP
61	LH and RH bottom side of aircraft at STA 260 and BL 28, 1-in. aircraft black letters.	PITOT STATIC DRAIN
62	Near lower corner of copilot door aft, 1/2-in. aircraft black letters.	EXT. I.C.S.
63	Fuselage near jack point FS 247, WL 203, 1/2-in. aircraft black letters.	
64	LH side of A/C, 247, WL 232, aircraft black.	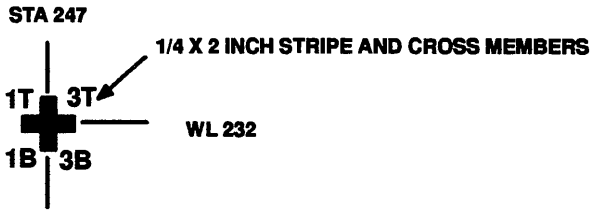

Figure 9-42. Exterior and Interior Markings, UH-60 (Sheet 10 of 22)

CODE NO.	DIRECTIONS	WORDING
65	Inside of cockpit copilot door on vinyl coated nylon pocket, 1/2-in. aircraft white letters.	CHECK LIST DATA AND MAP STOWAGE
66	Interior of cockpit window sill-aft of emergency handle, orange-yellow arrow and 1/2-in. letters.	EMERG. EXIT-PULL
67	Pilot and copilot door handles exterior, 1/2-in. aircraft black letters.	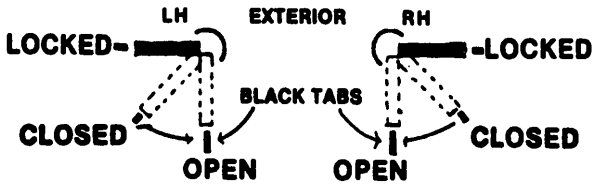
68	Fairing at access to shock strut, 1/2-in. aircraft black letters. **NOTE** Do not apply this stencil on aircraft provisioned for ESSS.	3B-30
69	Oleo inspection window paint as shown. Paint red No. 31136 White No. 37875 Olive drab No. 34087	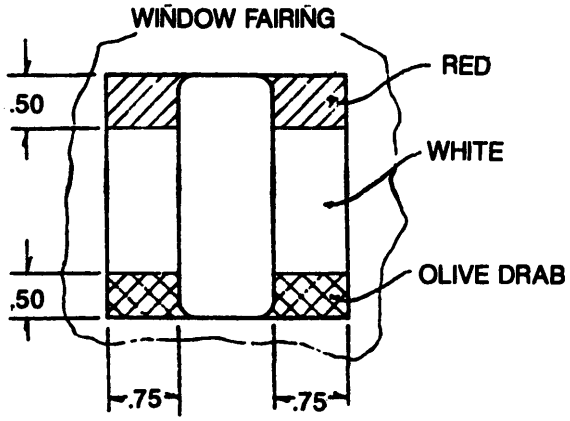

Figure 9-42. Exterior and Interior Markings, UH-60 (Sheet 11 of 22)

CODE NO.	DIRECTIONS	WORDING
70	Paint interior of cabin floor from FS 247 to FS 398 aircraft interior gray. Apply 2 inch wide non-skid stripes, 2 inches apart from FS 247 to FS 398. Do not apply non-skid material in floor attachment holes and countersinks.	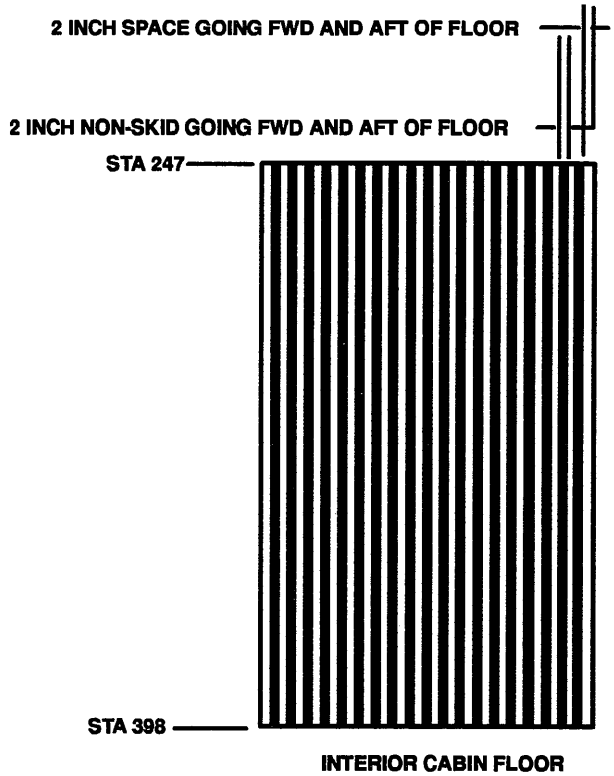
71	RH side of pylon steps, 3 places, 1/2-in. aircraft black letters.	PUSH AND TURN TO RELEASE
72	Both sides of aircraft. On left side start U at FS 528, WL 227. On right side of aircraft finish with Y at FS 528, WL 227, aircraft black letters. Place the United States Army per MWO 1-1520-230-50-CMWS drawing A100744, when MWO 1-1520-237-50-CMWS has been applied. If CMWS is installed on both sides of aircraft. On left side start U at FS 528, WL 243, in line with contour of tail cone. On right side of aircraft finish with Y at FS 528, WL 243, in line with contour of tail cone.	UNITED STATES ARMY 6 INCH HIGH 4 INCH WIDE DISTANCE BETWEEN LETTERS 1 INCH DISTANCE BETWEEN WORDS 4 INCH.
73	Prime cross hatched area using primer MIL-PRF-23377. Top coat aircraft black. **NOTE** Top coat area with aircraft green on HIRSS equipped aircraft.	

Figure 9-42. Exterior and Interior Markings, UH-60 (Sheet 12 of 22)

CODE NO.	DIRECTIONS	WORDING
74	DELETED.	
75	Below RH engine exhaust 1-in. olive drab letters.	DANGER EXHAUST
76	Apply non-skid coating to all walkways, steps and platforms. Paint aircraft black.	
77	Stencil all step areas as shown aircraft black stripe.	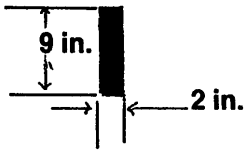
78	Right angle bands at LH and RH emergency exits and rescue areas, aircraft black.	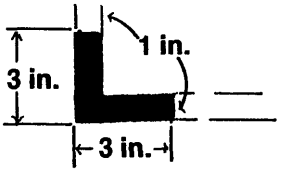
79	Engine intake duct (cross hatch area). Do not block any slots or holes. Paint aircraft black. (Do not paint any anodized areas.)	
80	Above and forward of cargo door FS 308, WL 261, 1/2-in. aircraft black letters.	
81	Apply non-skid coating to all walkways, steps and platforms. Paint aircraft black.	
82	Gunners window sill, 1/2-in. aircraft black letters.	STEP
83	Apply non-skid coating to all walkways, steps and platforms. Paint aircraft interior gray.	

Figure 9-42. Exterior and Interior Markings, UH-60 (Sheet 13 of 22)

CODE NO.	DIRECTIONS	WORDING
84	Stencil at all step areas as shown aircraft black stripe	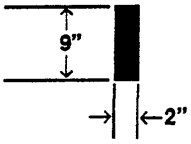
85	Pilots cockpit on upper windshield frame interior, 1/2-in. aircraft white letters.	HAND HOLD
86	Pilots window sill aft of emergency handle, 1/2-in. orange-yellow letters.	EMERGENCY EXIT PULL
87	Pilots and copilots door handles 1/2-in. aircraft white letters and arrows.	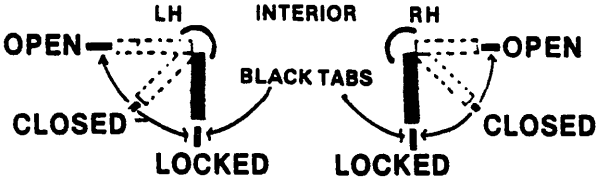
88	RH side of A/C FS 247, WL 232, aircraft black.	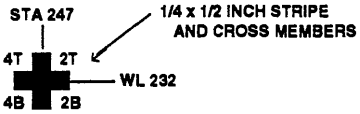
89	RH side of A/C FS 488, WL 232, aircraft black.	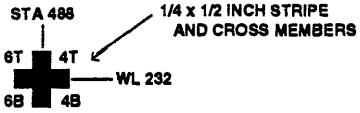
90	Fuselage near jackpoint FS 247, WL 203, 1/2-in. aircraft black letters.	
91	Near lower corner of pilots door and aft, 1/2-in. aircraft black letters.	EXT. I.C.S.
92	Below gunners window, at FS 284, WL 216, 1/2-in. aircraft black letters.	ACCESS COVER EXTERNAL POWER RECEPTACLE 115/200 VAC 400 CYCLE
93	Fuselage above access cover, 1/2-in. aircraft black letters.	4B-26

Figure 9-42. Exterior and Interior Markings, UH-60 (Sheet 14 of 22)

CODE NO.	DIRECTIONS	WORDING
94	Cabin, fuselage at FS 290, WL 206, 1/2-in. aircraft black letters.	TIRE PRESSURE 130/140 P.S.I.
95	Fairing at access to shock strut, 1/2-in. aircraft black letters. **NOTE** Do not apply this stencil on aircraft provisioned for ESSS. 1/2-in. aircraft black letters.	4B-31
96	Exterior RH cargo door near horizontally oriented handle (old) or vertically oriented handle (new), 1/2-in. aircraft black letters.	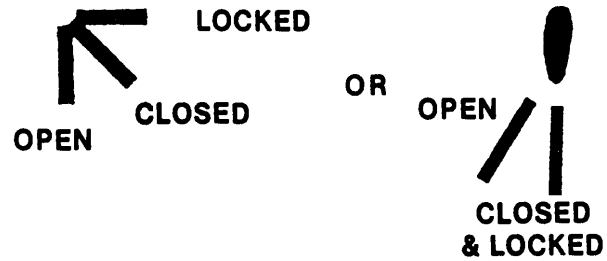
97	Interior RH cargo door near horizontally oriented handle (new) or vertically oriented handle (old), 1/2-in. aircraft black letters.	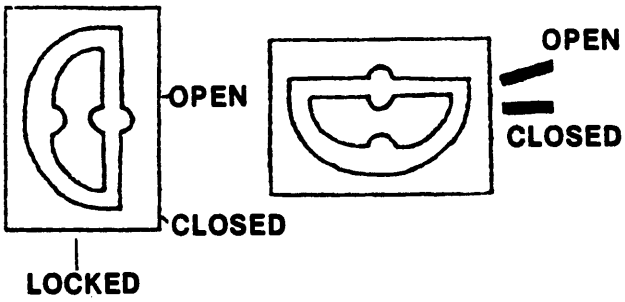
98	Paint RH interior cargo door handle aircraft black.	
99	Near RH cargo door handle (old), both interior and exterior of door, 1/2-in. aircraft black letters.	HANDLE MUST BE IN 'CLOSED' POSITION BEFORE CLOSING DOOR
100	RH interior cargo door, just below emergency handle, orange-yellow arrow and 1/2-in. letters.	EMERGENCY EXIT PULL ← FWD
101	Stencil 1/8-in. wide aircraft black stripes and 3/4-in. wide orange-yellow stripes in RH cargo door window jettison handle.	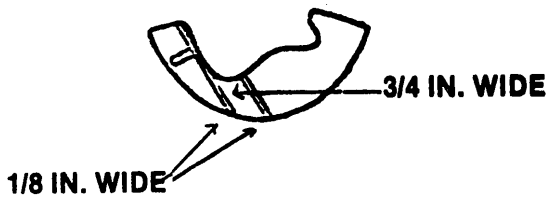

Figure 9-42. Exterior and Interior Markings, UH-60 (Sheet 15 of 22)

CODE NO.	DIRECTIONS	WORDING
102	Transition fuselage, aft of top fuselage step, 1/2-in. aircraft black letters.	FUEL FILLER CAP 181 GAL J P 8 FUEL MS038427
103	Fuel filler access panel 1/2-in. aircraft black letters.	4T-22
104	Bottom side on access door, FS 421, BL 5, 1/2-in. aircraft black letters.	FUEL SUMP DRAIN
105	Fwd RH fuselage near external power recptl., aircraft black. (See MIL-C-83413/9-2 for dimensions.)	MASSE KI GROUND HERE EARTH TERRA
106	Transition fuselage, FS 460, WL 247, 1/2-in. aircraft black letters.	FIRE EXTINGUISHER DISCHARGE INDICATOR
107	Above tie ring, FS 485, 1/2-in. aircraft black letters.	2 HOIST POINT TIE DOWN
108	Tail cone fuselage, FS 605, 1/2-in. aircraft black letters.	PYLON STRUT MTG
109	Tail cone fuselage above and aft of tie down, 1/2-in. aircraft black letters.	JACKING POINT
110	Tail cone lower aft fuselage, FS 640, 1/2-in. aircraft black letters.	TIRE PRESSURE 115/125 PSI
111	Tail cone fuselage lower aft section, FS 635, 1/2-in. aircraft black letters.	UTILITY MAINT. LIGHT RCPT. BLO
112	Tail cone just fwd of access panel, FS 640, WL 224, 1/2-in. aircraft black letters.	STRUCTURAL ACCESS PANEL MUST BE FITTED BEFORE FLIGHT
113	Access panel and above on fuselage, 1/2-in. aircraft black letters.	6T-6B-32

Figure 9-42. Exterior and Interior Markings, UH-60 (Sheet 16 of 22)

CODE NO.	DIRECTIONS	WORDING
114	Tail cone pylon fold, FS 679, 1/2-in. aircraft black letters.	PYLON FOLD STRUT MTG
115	Near pylon fold, 1/2-in. aircraft black letters.	WARNING DISCONNECT ELECTRICAL HYDRAULICS AND CONTROLS BEFORE FOLDING
116	Pylon lower edge, 1/2-in. aircraft black letters.	PYLON STEP UNDER PUSH UP AND TURN
117	LH and RH sides, FS 732 approximately, WL 260, aircraft black arrows and letters. Stencil radio call numbers above Danger sign in 6-in. aircraft black number.	DANGER KEEP AWAY RIGHT HAND SIDE 3" 1/2" 29" DANGER 1 7/8" KEEP AWAY LEFT HAND SIDE
118	DELETE	

Figure 9-42. Exterior and Interior Markings, UH-60 (Sheet 17 of 22)

CODE NO.	DIRECTIONS	WORDING
119	After pylon call out for stabilizer degrees, 1/2-in. aircraft black letters, 1/2-in. wide and 2 long aircraft black stripes	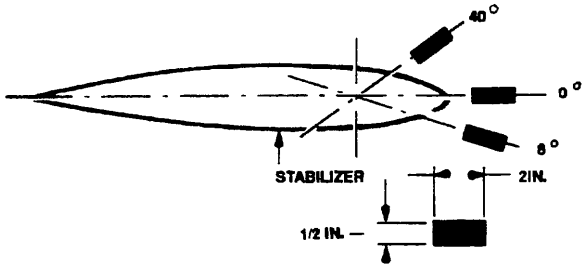
120	Oleo inspection window paint as shown red No. 31136 white No. 37875 olive drab No. 34087	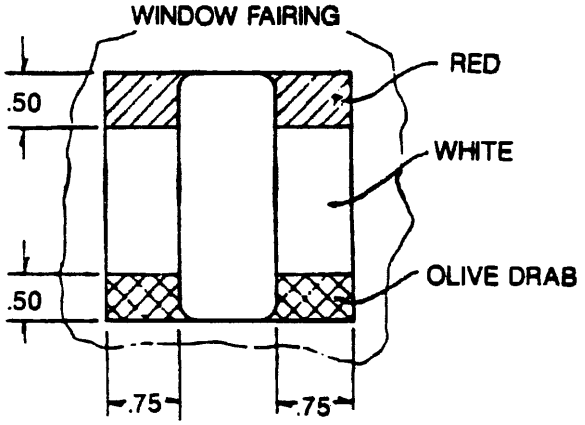
121	Locate stencil top side of cockpit between pilot and co-pilot upper window area exterior, 1/2-in. aircraft black letters.	NO STEP
122	Apply non-skid coating to all walkways, steps, and platforms. Paint aircraft black.	
123	Apply non-skid coating to all walkways, steps, and platforms. Paint aircraft black.	
124	Top side of RH APU access panel, 1/2-in. MIL-DTL-64159 or MIL-DTL-53039, olive drab No. 34087, letters	4T-28
125	Pylon, at FS 735, BL 0, 1/2-in. aircraft black letters.	HAND HOLD
126	Top side of stabilizer fwd spar, 1-in. aircraft black letters.	NO STEP
127	Stencil black stripe to inboard leading edge of stabilizer WL 244.40 to line up with position marks on pylon, aircraft black stripe.	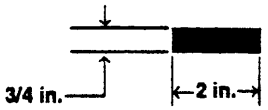

Figure 9-42. Exterior and Interior Markings, UH-60 (Sheet 18 of 22)

CODE NO.	DIRECTIONS	WORDING
128	LH and RH exhaust fairing top side, 1/2-in. aircraft black letters.	NO STEP
129	Top side of LH APU access panel, 1/2-in. MIL-DTL-64159 or MIL-DTL-53039, olive drab, No. 34087, letters.	3T-27
130	Right side of engine nacelle near screen, 1/2-in. aircraft black letters.	NO STEP
131	Paint underside of sliding fairing aircraft black #37038.	
132	Inside of cockpit pilot door on vinyl coated nylon pocket, 1/2-in. aircraft white letters.	CHECK LIST DATA AND MAP STOWAGE
133	RH underside of APU access panel, 1-in. aircraft black letters	NO STEP
134	LH underside of APU access panel, 1-in. aircraft black letters.	NO STEP
135	Below gunners window, FS 260, WL 220 approximately, black 1/4-in. letters. **Contractor will insert their code.	**WP1-P2-L3 Date WP - indicates wash primer used P - indicates primer used L - indicates lacquer used (if req'd) C - indicates coating used (if req'd)
136	Below code 135. **NOTE** Date shown on stencil is date aircraft paint with MIL-C-46168 paint.	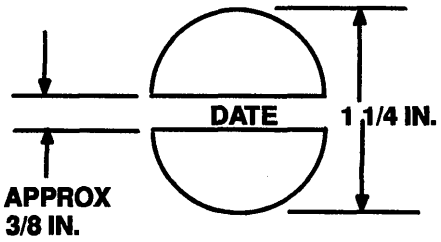
137	Back of Norton Armored crew seat, P/N RA30525-1. First line 1/2-in., second line 3/8-in., remaining 1/4-in. orange-yellow letters.	WARNING SEAT TILT RELEASE SEAT TILT RELEASE

Figure 9-42. Exterior and Interior Markings, UH-60 (Sheet 19 of 22)

CODE NO.	DIRECTIONS	WORDING
138	Dot between holes, FS 624, WL 227 (approximately), aircraft yellow No. 33538.	• .75 dia
139	Dot between holes, FS 585, WL 227 (approximately), aircraft black.	• .75 dia
140	Both sides of aircraft on side ends of instrument glare shield, 1/2-in. aircraft white letters.	NO HAND HOLD
141	Top of both collective stick cover panels, 1/2-in. aircraft white letters.	NO STEP
142	Aircraft battery cover behind copilot's seat, 1/2-in. aircraft black letters.	BATTERY
143	LH and RH side of aircraft on ESSS fixed provision upper fairing assembly (fwd and aft sections), 1-in. aircraft black letters.	NO STEP
144	LH and RH side of aircraft on ESSS fixed provision upper fairing assembly platform, 1/2-in. aircraft black letters.	HAND HOLD
145	Access panel both RH and LH side of aircraft and above on fuselage air-oil strut, 1/2-in. aircraft black letters. **NOTE** Apply only on ESSS provisioned aircraft.	3T-3B-37 4T-4B-38
146	Both RH and LH side of aircraft on fairing at access to shock strut, 1/2-in. aircraft black letters. **NOTE** Apply only on ESSS provisioned aircraft.	3B-39 4B-40
147	Both RH and LH side of aircraft on ESSS fixed provisions lower fairing assembly (fwd) and another directly above on fuselage (2 stencils per side), 1/2-in. aircraft black letters.	3B-41 4B-43
148	Both RH and LH side of aircraft on ESSS fixed provisions lower fairing assembly (aft) and another directly above on fuselage (2 stencils per side), 1/2-in. aircraft black letters.	3B-42 4B-44
149	Both RH and LH side of aircraft on ESSS fixed provisions upper fairing assembly platform on inboard edge, 1/2-in. MIL-DTL-64159 or MIL-DTL-53039, olive drab, No. 34087, letters.	3T-33 4T-34

CODE NO.	DIRECTIONS	WORDING
150	Top of antenna, 1 in. olive drab letters.	NO STEP
151	Top side of VOR/LOC antenna, 1/2 in. olive drab letters.	6B-6T-19
152	Stencil 2 olive drab, No. 34087, continuous stripes around each main rotor blade. Each stripe is 1 in. wide and the center of the stripes will be 140.86 inches from the center of the blade cuff pin holes.	

Figure 9-42. Exterior and Interior Markings, UH-60 (Sheet 20 of 22)

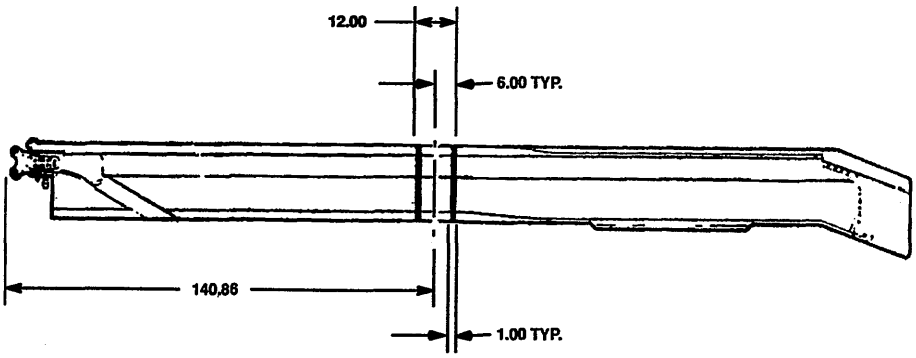

Figure 9-42. Exterior and Interior Markings, UH-60 (Sheet 21 of 22)

CODE NO.	DIRECTIONS	WORDING
153	Apply non skid coating on LH and RH oil cooler access panels.	
154	Apply non skid coating to LH and RH access panels.	
155	Apply 10 inch wide non skid coating to controls/accessories sliding cover.	
156	L/H slide of A/C, FS 256 WL 245, approximately, top two lines 1-inch black, #37038, Letters, remainder are 1/2-inch black, #37038 Letters	U.S. Army (insert model) U.S.A. serial No. (Insert Serial No.) Service this aircraft with MIL-T-83133 Grade JP8 Aviation fuel. If not available, refer to TB 55-9150-200-24 for alternate fuel.
157	Inside pressure/closed circuit refueling access cover 1/3-in aircraft black letters.	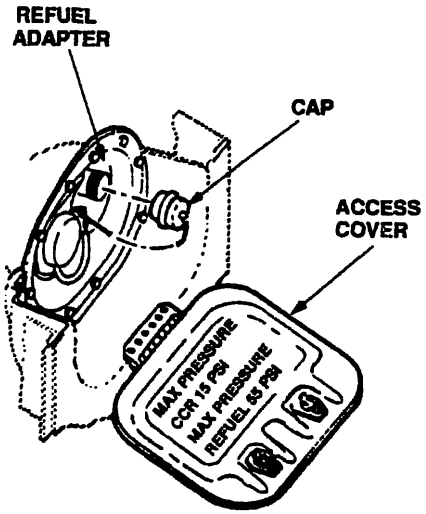
158	Locate stencil at FS 249, WL 219 and FS 257, LBL 29. 1/2 in. aircraft black letters	Battery Vent

Figure 9-42. Exterior and Interior Markings, UH-60 (Sheet 22 of 22)

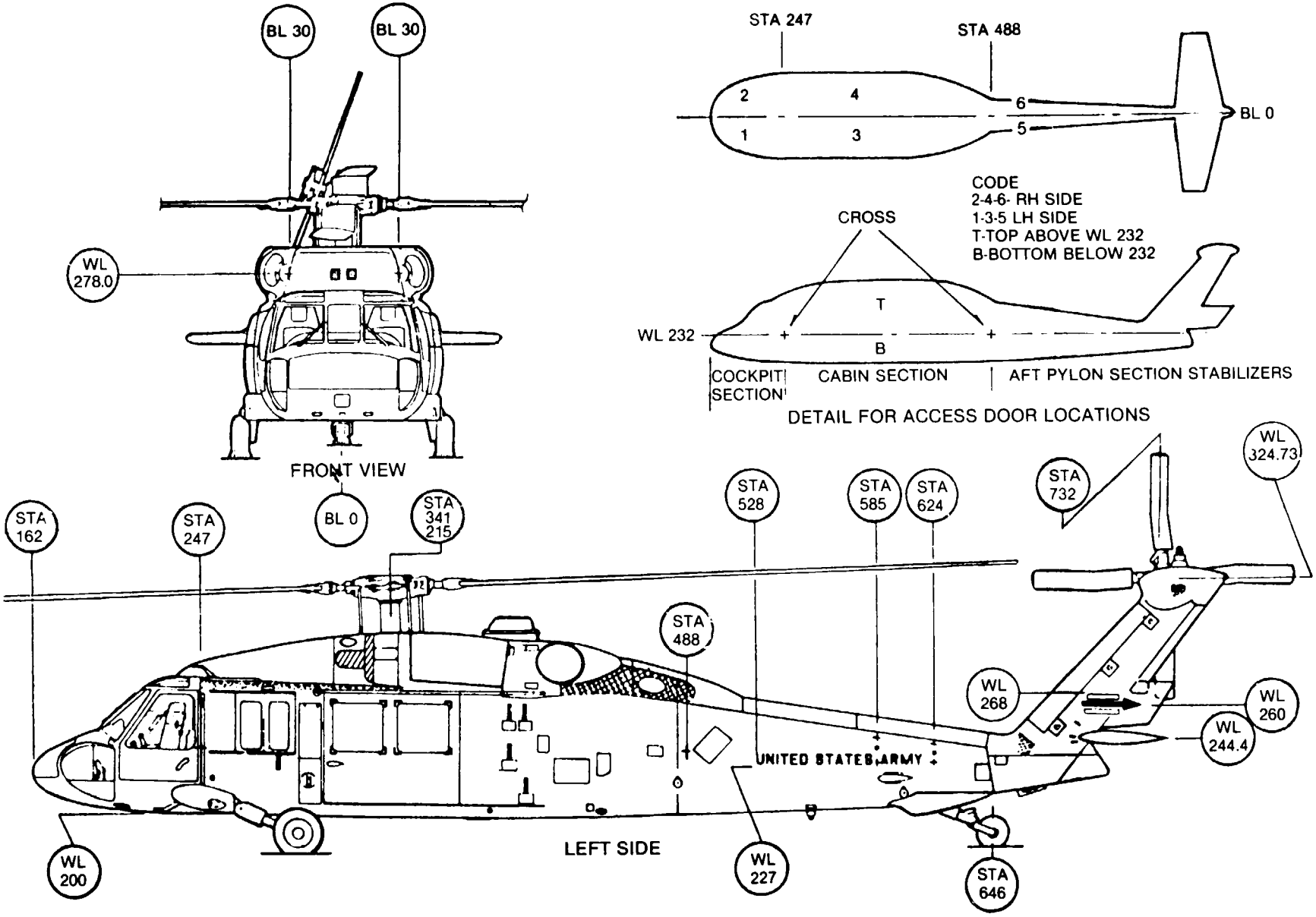

Figure 9-43. Station Locations, UH-60

CHAPTER 10
FIXED WING AIRCRAFT ILLUSTRATIONS

SECTION I GENERAL

a. The basic external color of the aircraft in this chapter will be insignia white paint. C–12 = Paint # G8022 MFG U.S. paint Federal Standard 595, in accordance with MIL-DTL-64159 or MIL-DTL-53039. RC-12 = paint # 8228-9316 (MFG Sherwin Williams.)

b. All markings, unless otherwise speci.cally noted in the following figures, will be aircraft black, shade No. 37038 of Federal Standard 595, in accordance with MIL-DTL-64159 or MIL-DTL-53039.

c. Unless otherwise specified herein, all lettering will be standard 50% letters, 0.50 in. high.

d. The following closure areas of C-12 & RC-12 aircraft shall be painted the shades indicated, in accordance with Federal Standard 595 and MIL-DTL-64159 or MIL-DTL-53039.

(1) C-12 and RC-12 landing gear, wheels, inside of landing gear doors and wheel wells insignia white paint # G8022 US Paint.

e. Deleted

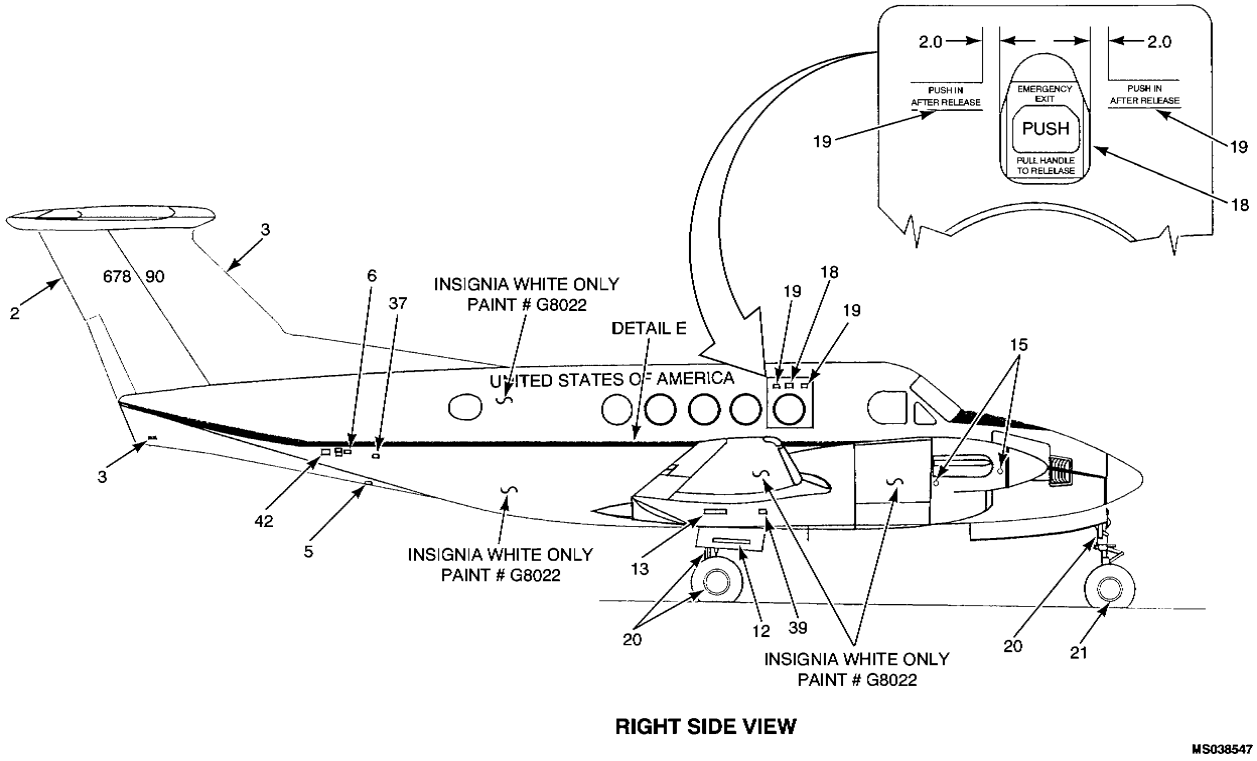

Figure 10-1. Exterior Markings, C-12 (Sheet 1 of 22)

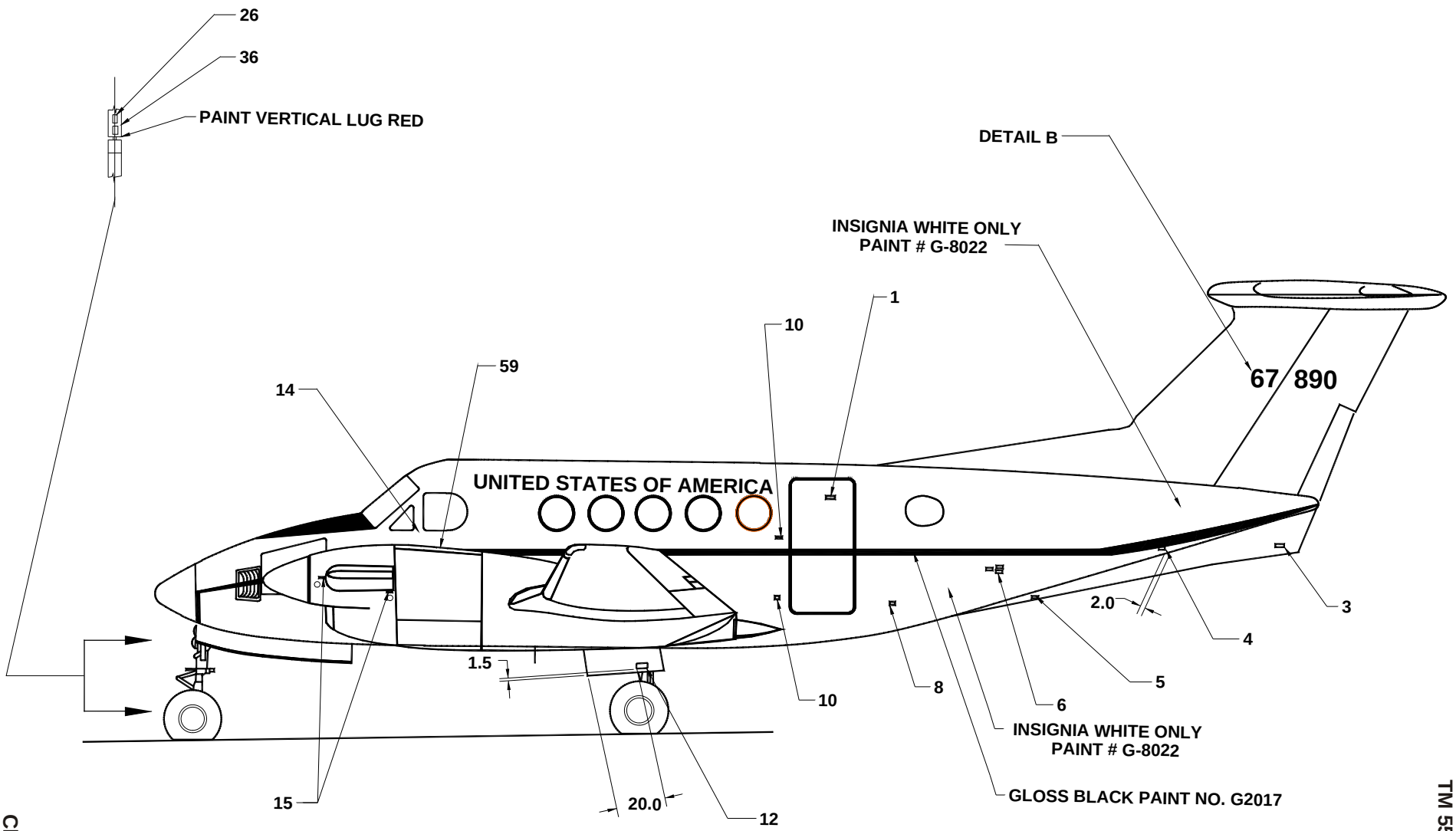

LEFT SIDE VIEW

Figure 10-1. Exterior Markings, C-12 (Sheet2 of 22)

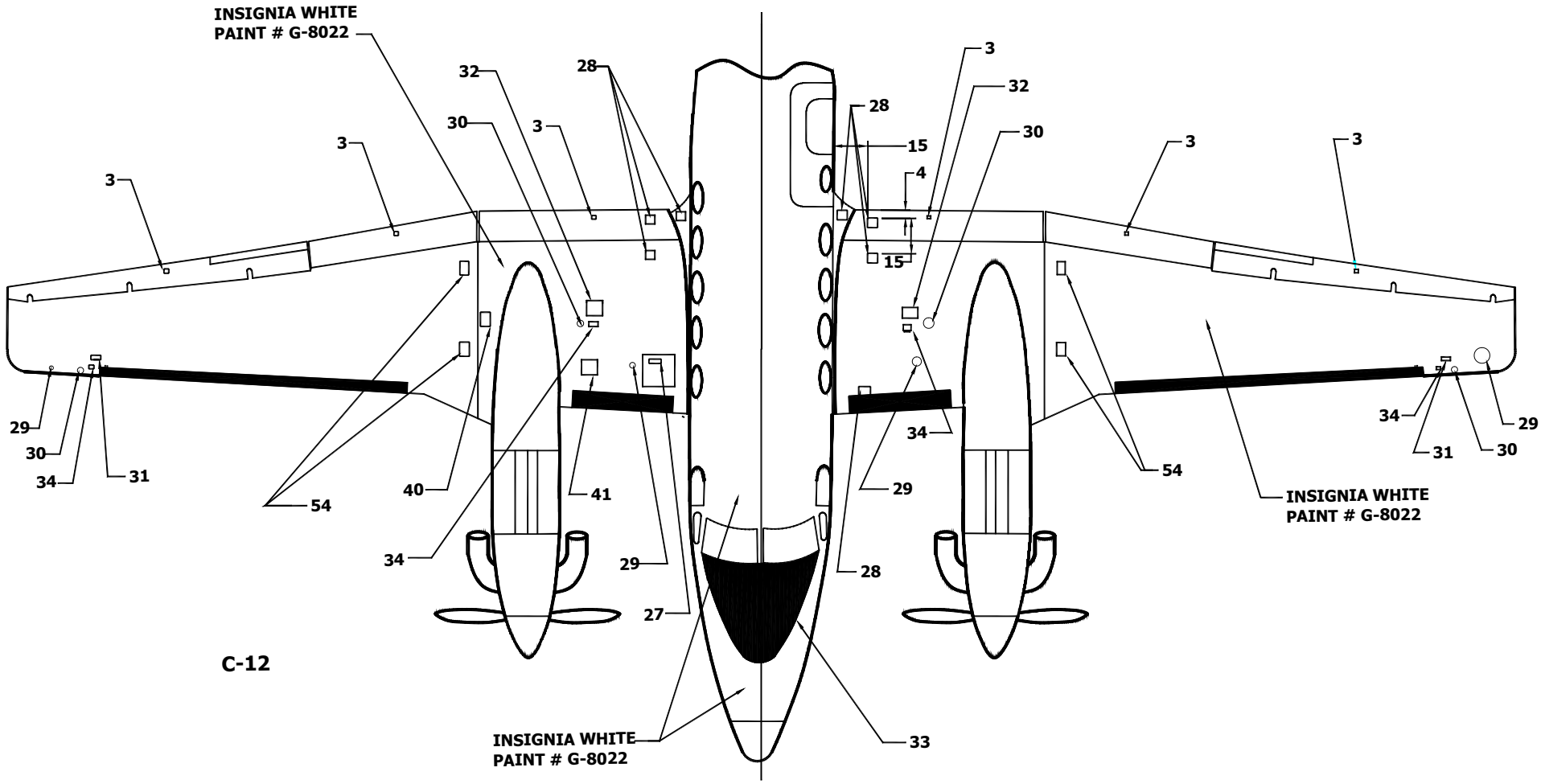

TOP VIEW

Figure 10-1. Exterior Markings, C-12 (Sheet 3 of 22)

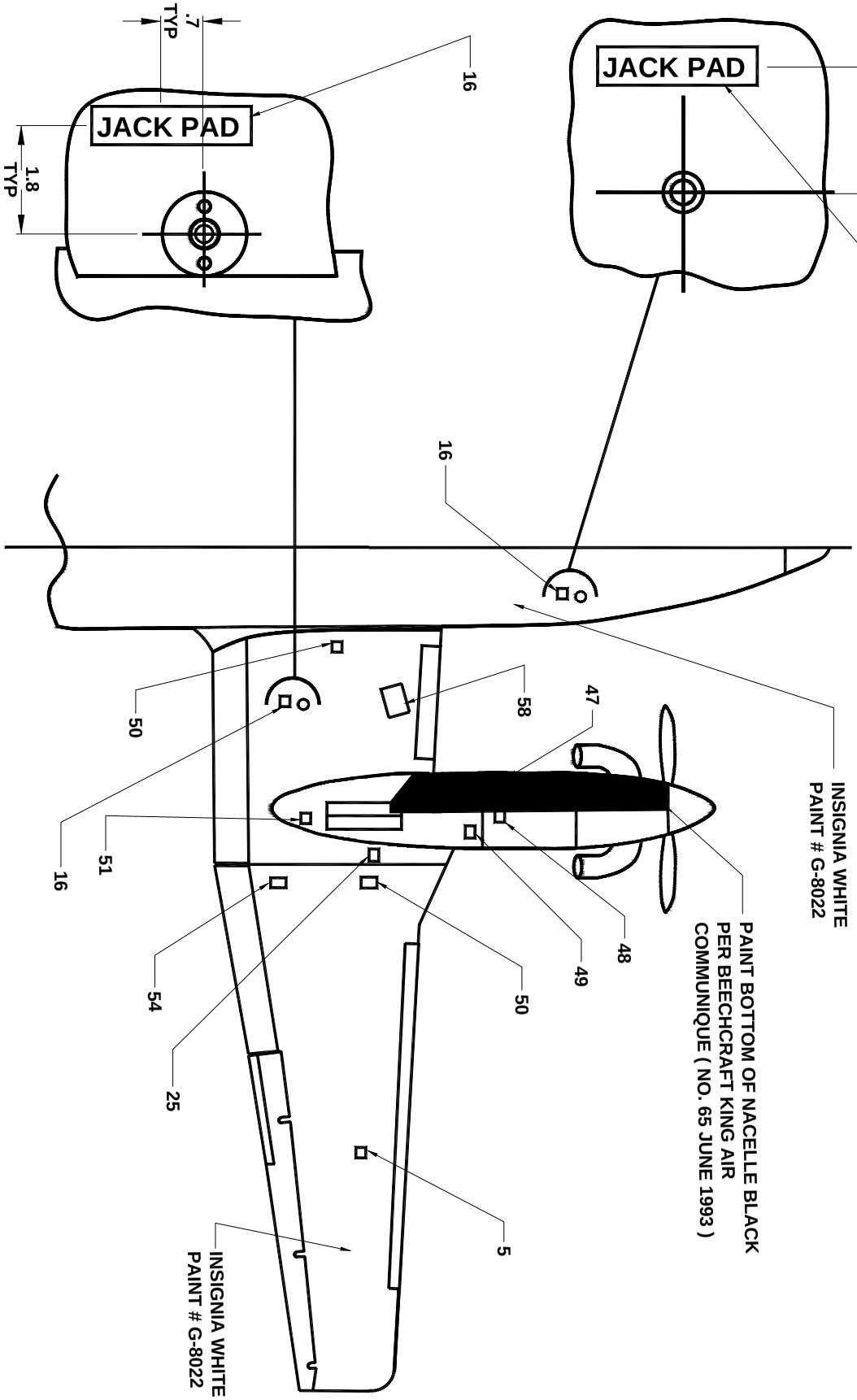

BOTTOM VIEW

Figure 10-1. Exterior Markings, C-12 (Sheet 4 of 22)

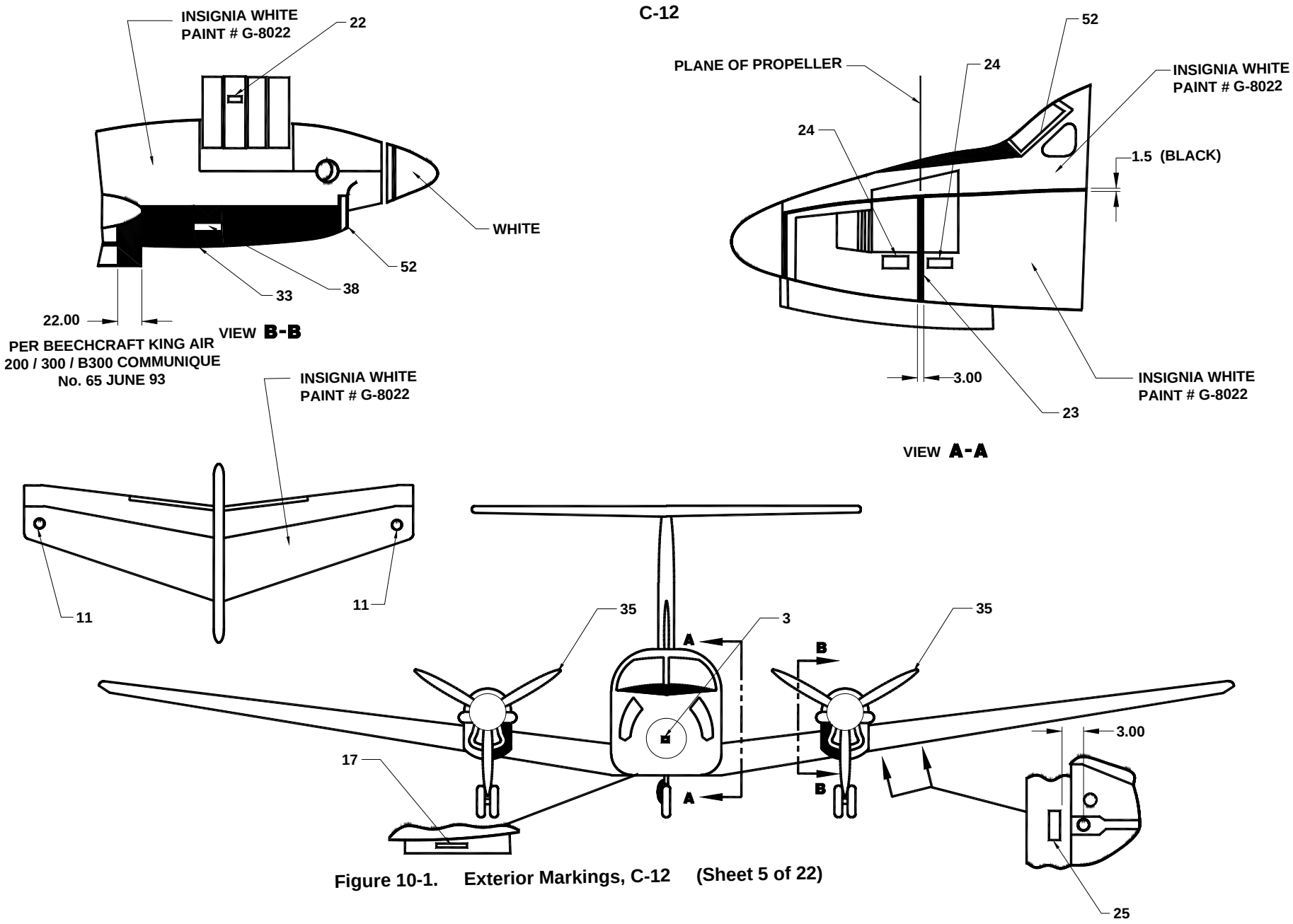

Figure 10-1. Exterior Markings, C-12 (Sheet 5 of 22)

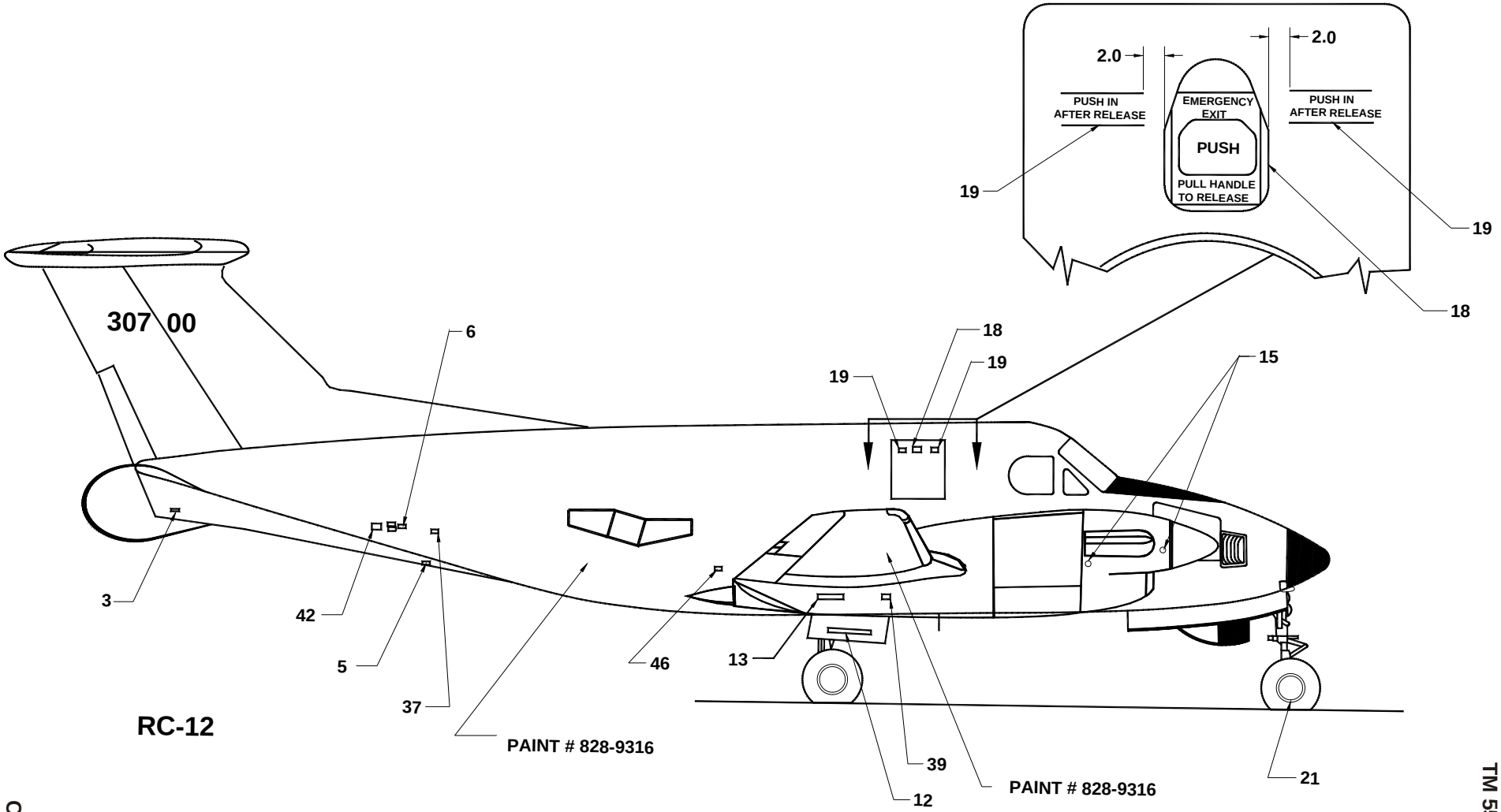

RIGHT SIDE VIEW

Figure 10-1. Exterior Markings, RC-12 (Sheet6 of 22)

WING TIP PODS OMMITTED THIS VIEW FOR CLARITY

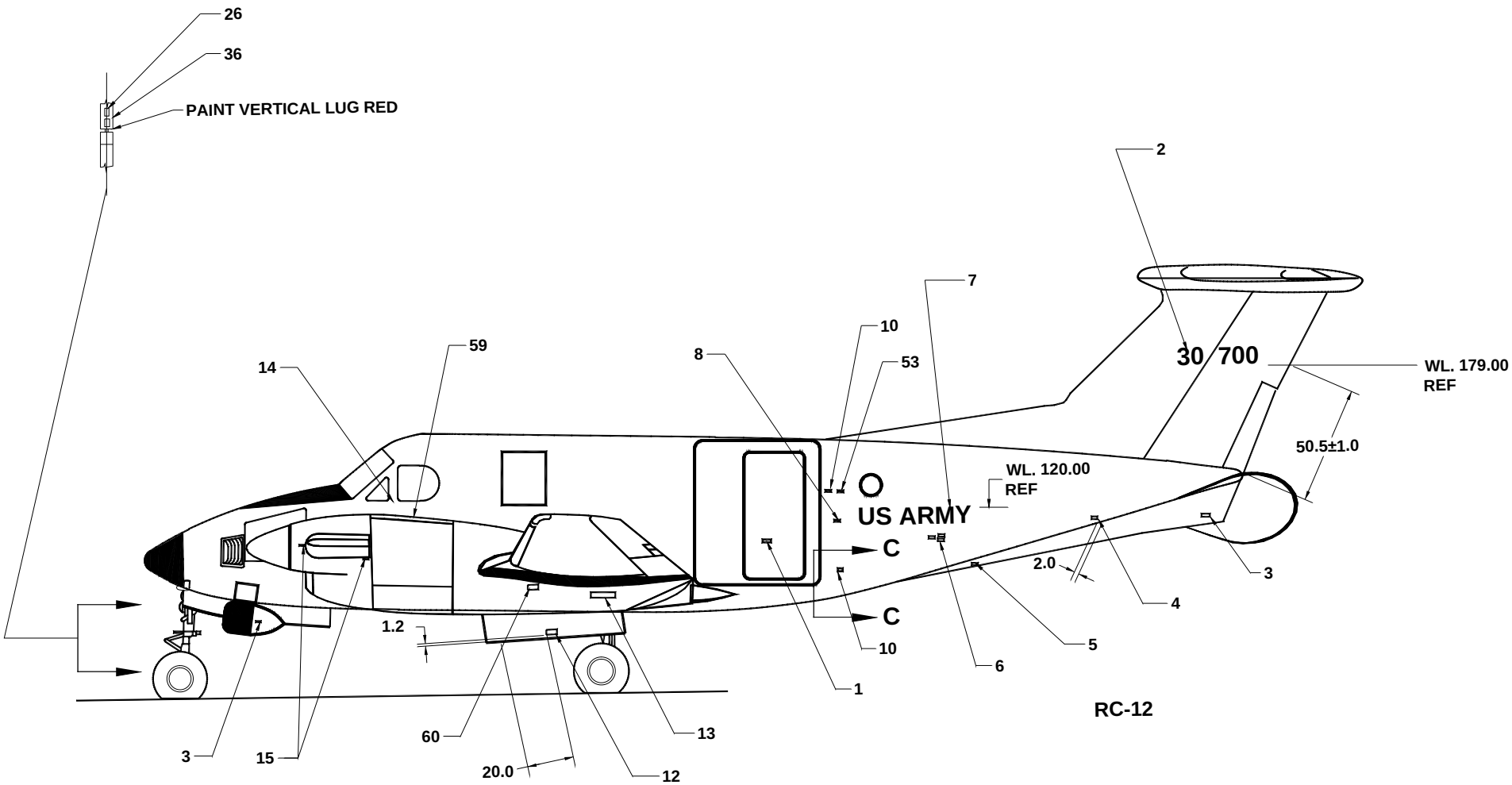

LEFT SIDE VIEW

Figure 10-1. Exterior Markings, RC-1 (Sheet 7 of 22)

W ING TIP PODS OMITTED THIS VIEW FOR CLARITY

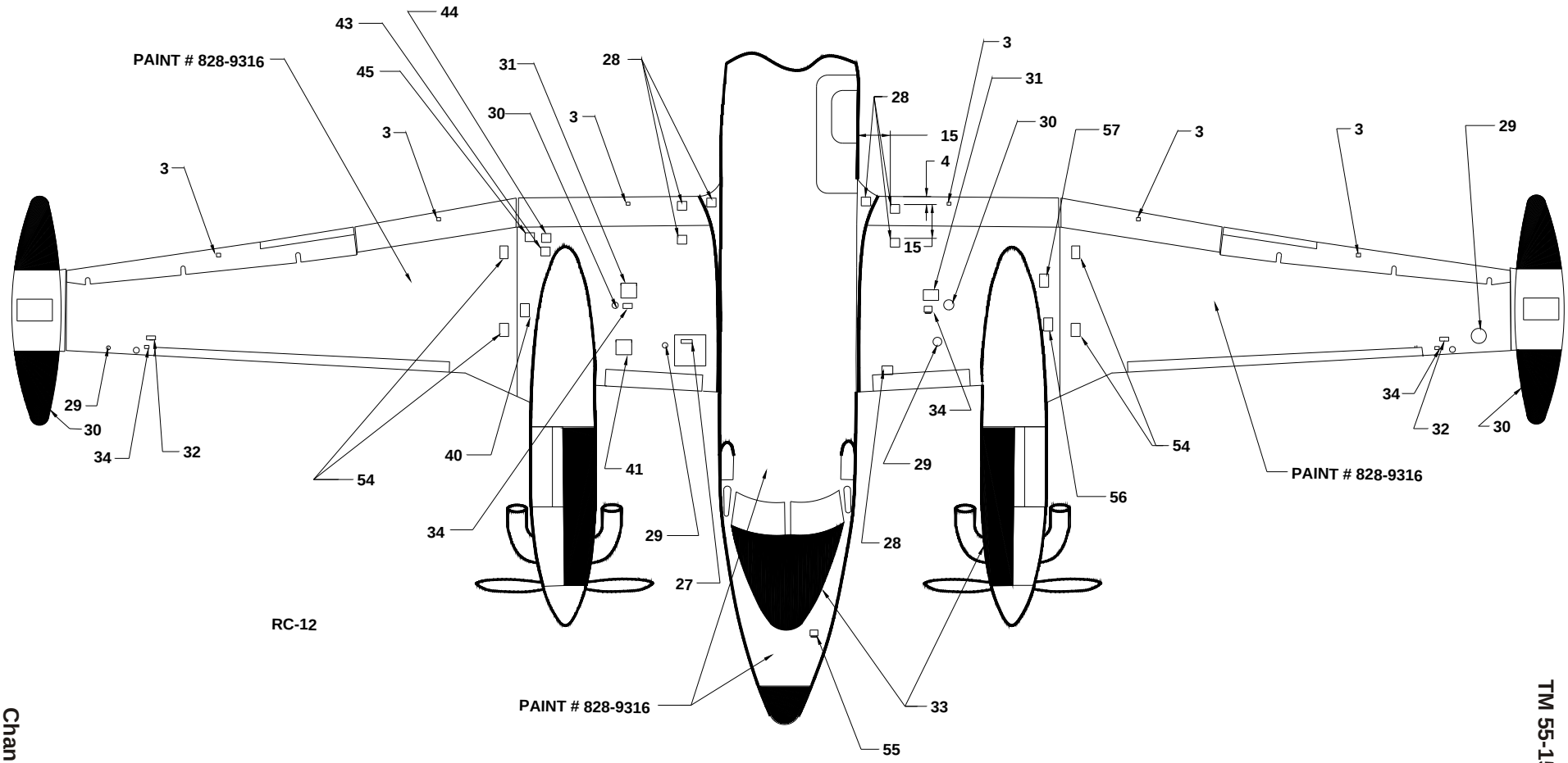

TOP VIEW

Figure 10-1. Exterior Markings, C-12 (Sheet 8 of 22)

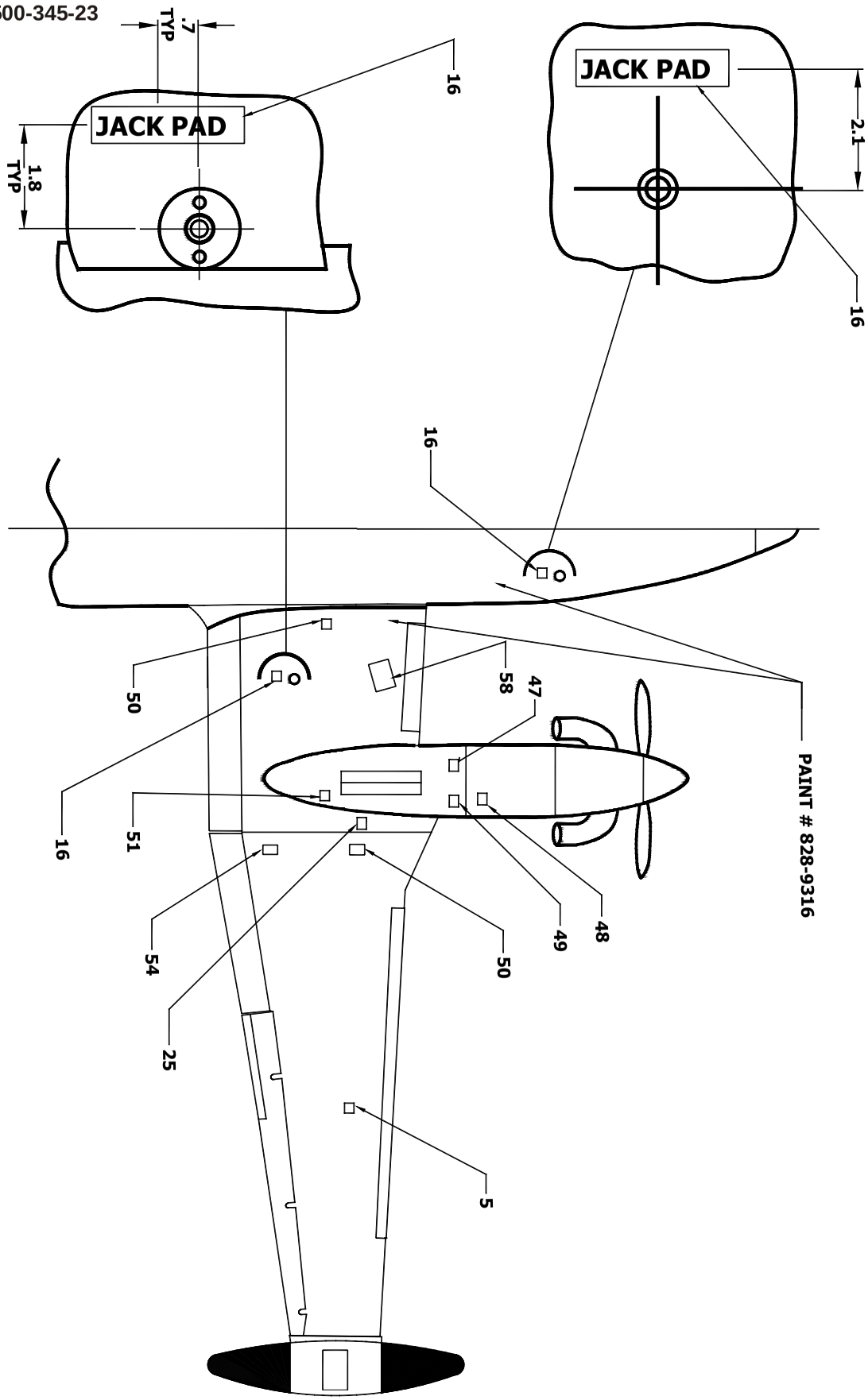

BOTTOM VIEW

Figure 10-1. Exterior Markings, RC-12 (Sheet 9 of 22)

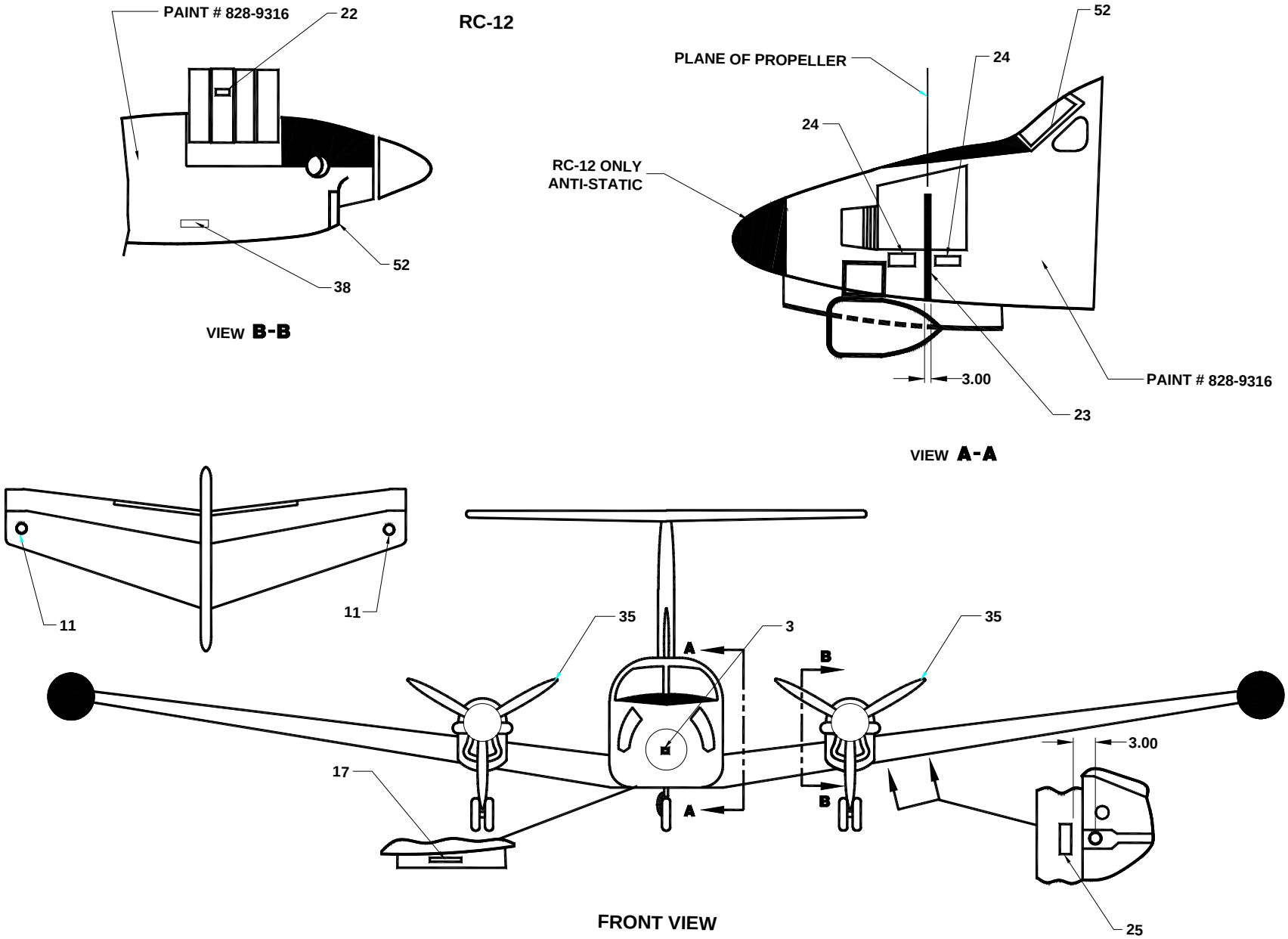

Figure 10-1. Exterior Markings, RC-12 (Sheet 10 of 22)

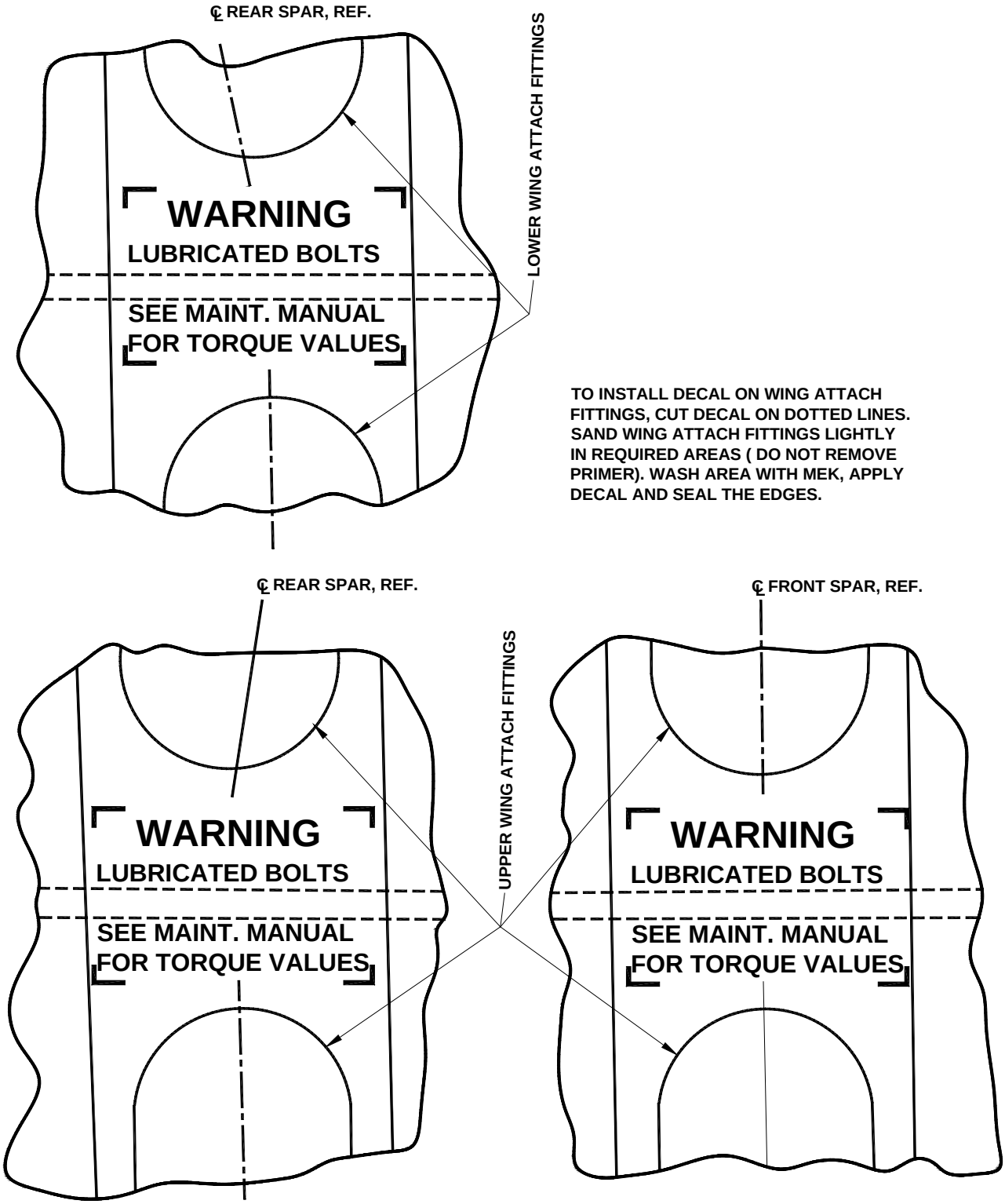

DETAIL A: WING ATTACH FITTINGS, LEFT HAND SHOWN, RIGHT HAND OPPOSITE, FITTING COVERS OMITTED.

Figure 10-1. Exterior Markings, C-12 (Sheet 11 of 22)

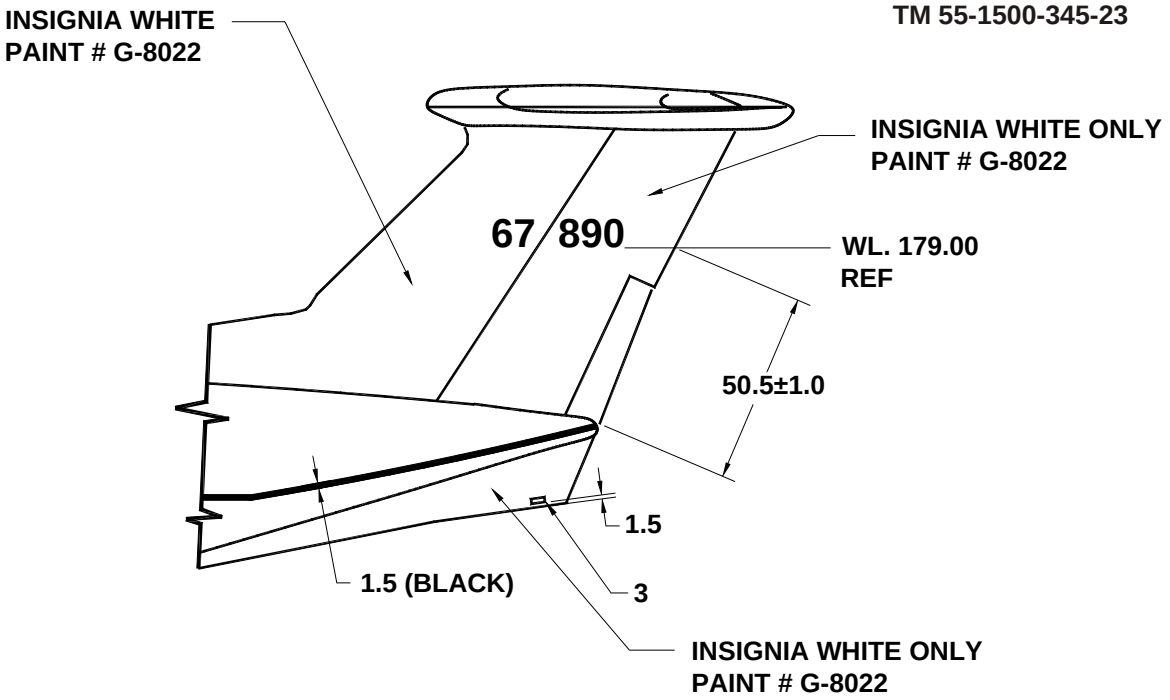

DETAIL B

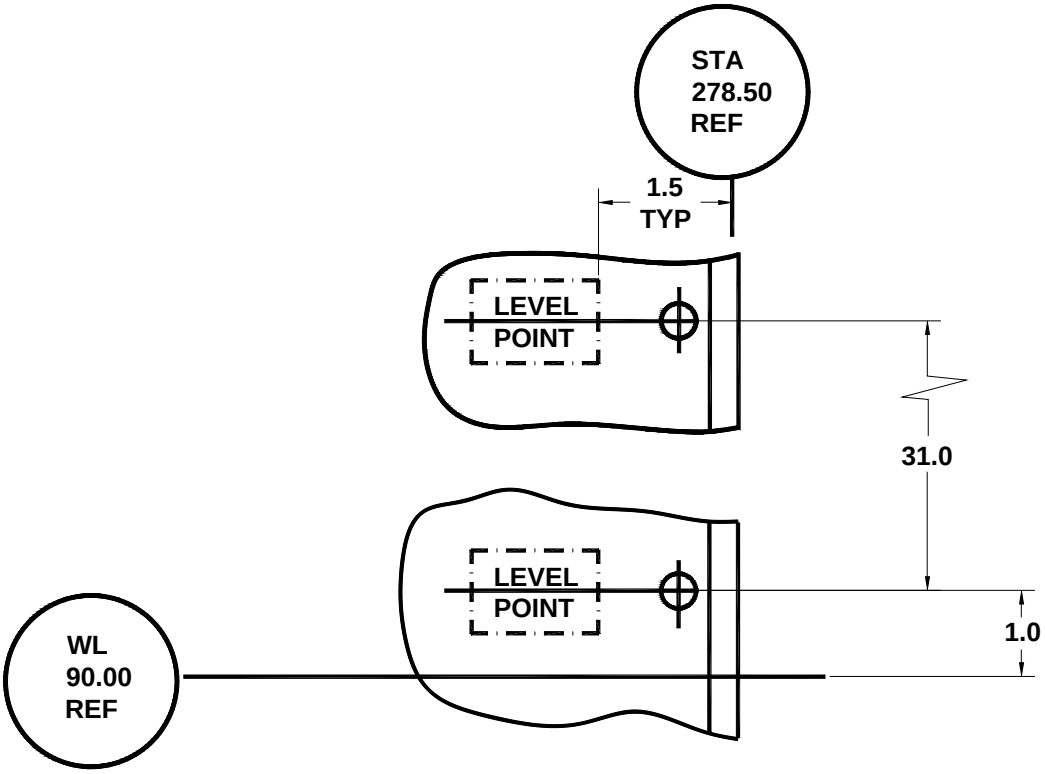

DETAIL C

Figure 10-1. Exterior Markings, C-12 (Sheet 12 of 22)

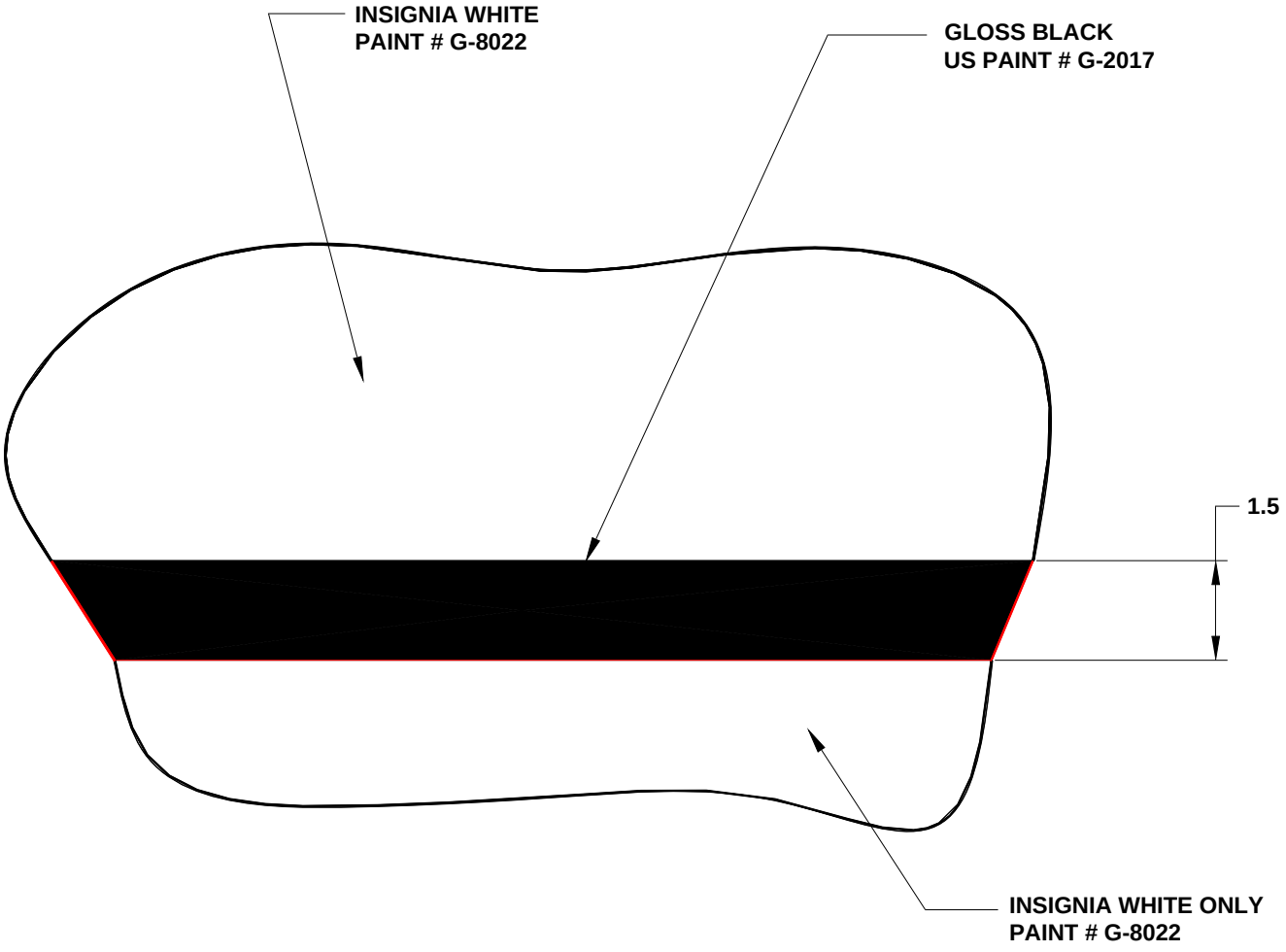

DETAIL E

Figure 10-1. Exterior Markings, C-12 (Sheet 13 of 22)

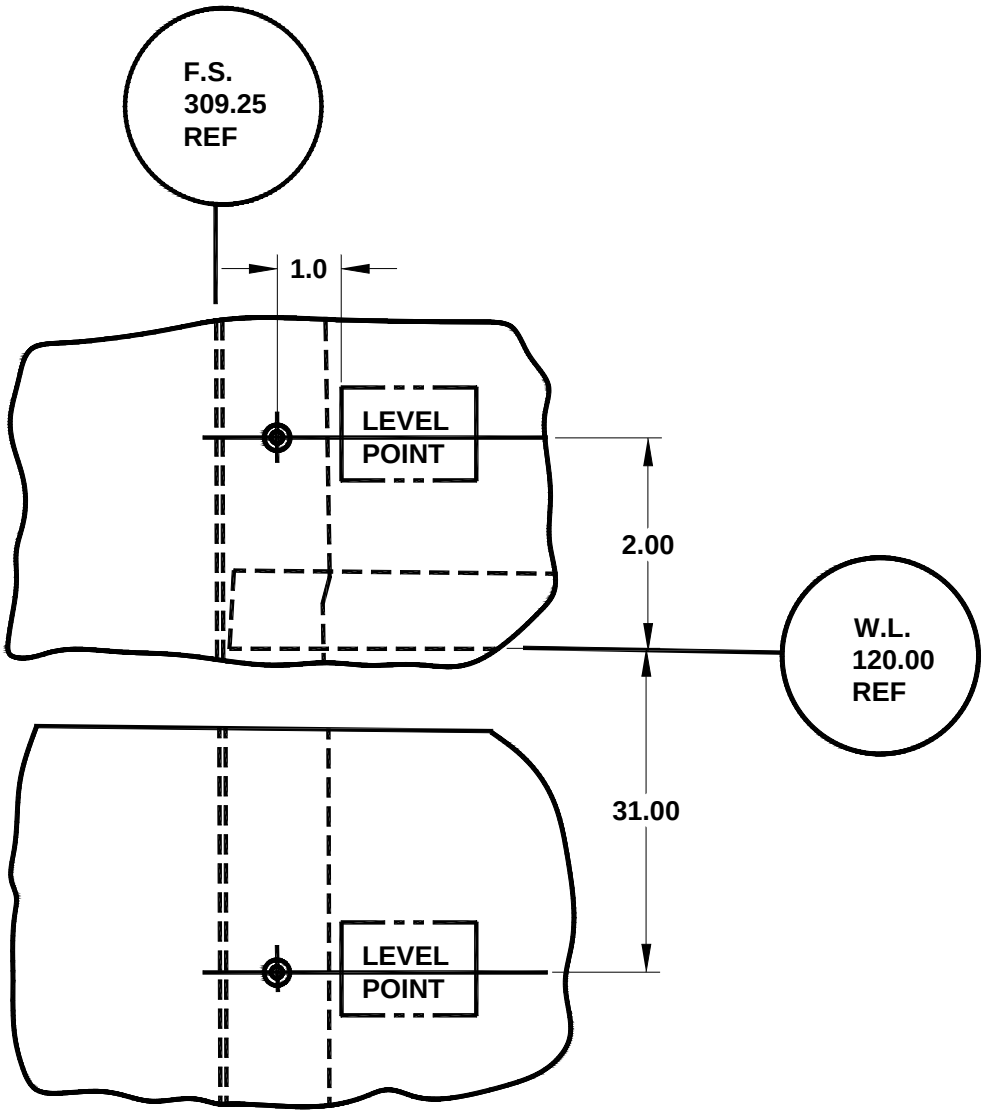

DETAIL F

Figure 10-1. Exterior Markings, RC-12 (Sheet 14 of 22)

CODE NO.	DIRECTIONS	WORDING
1	Left side of fuselage on entrance air step door, adjacent to handle. 1/2-in. MIL-C-46168, aircraft black letters.	**PUSH BUTTON AND TURN HANDLE TO OPEN**
2	Both sides of vertical stabilizer. C-12, see Detail B. RC-12 8-in. aircraft black numbers.	**(Radio call numbers)**
3	C-12 both sides of ventral fin, center top trailing edge of each aileron and flap, 1/2-in. black letters. Also center on nose cone using 1/2-in. aircraft black letters. RC-12D, 1/2-in. aircraft black letters and MIL-C-46168 aircraft white letters on nose cone. (Use gloss black paint part number G2017 (MFG U.S. Paint) C-12 only) (Use flat black paint part number G2002 (MFG U.S. Paint) RC-12 only) Also RC-12 Forward data link and Aft data link data link pods.	**NO PUSH**
	Aircraft data plate located on left side of aft fuselage.	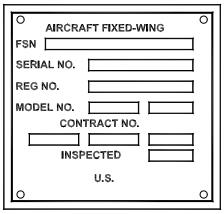
5	C-12 both sides of ventral fin and bottom center of each outboard wing panel, 1/2-in. black letters. RC-12, 1/2-in. aircraft black letters. (Use gloss black paint part number G2017 (MFG U.S. Paint) C-12 only) (Use flat black paint part number G2002 (MFG U.S. Paint) RC-12 only)	**TIE DOWN**
6	C-12 both sides of fuselage below static port. Do not paint static port. 1/2-in, black letters. RC-12 1/4-in. aircraft black letters. (Use gloss black paint part number G2017 (MFG U.S. Paint) C-12 only) (Use flat black paint part number G2002 (MFG U.S. Paint) RC-12 only)	**STATIC AIR KEEP CLEAN**
7	RC-12 both sides of fuselage, aft of cabin door. Aircraft black letters. (Using flat black paint part number G2002 (MFG US Paint) RC-12 only)	**U.S. ARMY**
8	Left side of fuselage aft of cabin door, 1/2-in. aircraft black letters.	**FIRE EXTINGUISHER INSIDE**
9	Paint windows using 828-9316 paint (MFG Sherwin-Williams), exterior aircraft gray. On RC-12 aircraft with cabin windows (D, H).	

Figure 10-1. Exterior Markings, C-12 / RC-12 (Sheet 15-22)

CODE NO.	DIRECTIONS	WORDING
10	C-12 left side fuselage, fwd of cabin door. Upper marking 1/2-in. aircraft black letters, lower marking 1/2-in. black letters. See Detail C. RC-12, aft of cabin door, 1/2-in. aircraft black letters. See Detail F. (Use gloss black paint part number G2017 (MFG U.S. Paint) C-12 only) (Use flat black paint part number G2002 (MFG U.S. Paint) RC-12 only)	**LEVEL POINT**
11	Left and right top of horizontal stabilizer 1/2-in. and 1/4-in. aircraft black letters.	**ACCESS ASN FLUX DETECTOR CAUTION: USE NON-MAGNECTIC SCREWS IN COMPASS**
12	Both engine nacelles, inside each outboard main landing gear door, 1/2-in. aircraft black letters. *C-12, **RC-12, *** C-12 High Flotation.	**NORMAL PRESSURE 92-96 PSI* 73-77 PSI** 60-64 PSI***
13	Aft, outboard sides of each engine nacelle, above each main landing gear door, 1/2-in. aircraft black letters.	**CAUTION: DISCONNECT ELECTRICAL WIRING AND PLUMBING BEFORE REMOVING WING**
14	Left side of fuselage under cockpit window. Enter appropriate model" and aircraft serial number. 1/2-in. aircraft black letters. RC-12 only.	**U.S. ARMY U.S.A. SERIAL NO. 00000**
15	C-12, inboard and outboard fwd sides of both engine cowlings, four places on each cowling, black. C-12 and RC-12, black vinyl decal.	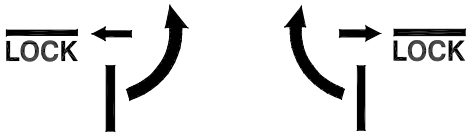
16	C-12, aft of nose wheel well and left of fuselage centerline. Also two on bottom of wing stubs inboard of each engine nacelle. 1/2-in. black letters. C-12 and RC-12, 1/2-in. aircraft black letters. (Use gloss black paint part number G2017 (MFG U.S. Paint) C-12 only) (Use flat black paint part number G2002 (MFG U.S. Paint) RC-12 only)	**JACK PAD**
17	Locate on inboard side of left nose gear door, 1/2-in. aircraft black letters.	**NORMAL PRESSURE 55 60 PSI**

Figure 10-1. Exterior Markings, C-12 / RC-12 (Sheet 16 of 22)

CODE NO.	DIRECTIONS	WORDING
18	C-12, locate on right side of fuselage above fwd cabin window, 1/2-in. black letters. RC-12, 1/2-in. aircraft black letters. (C-12 silk screen with ink, gloss black) (RC-12 flat black paint part number G2002 (MFG U.S.Paint))	**EMERGENCY EXIT** **PUSH** **PULL HANDLE TO RELEASE**
19	C-12, right side of fuselage above fwd cabin window, upper marking, 1/2-in black letters, lower marking, 1/4-in. black letters. RC-12, 1/2-in. aircraft black letters (C-12 silk screen with ink, gloss black) (RC-12 flat black paint part number G2002 (MFG U.S.Paint))	**PUSH IN** **AFTER RELEASE**
20	Paint wheels, landing gear strut and wheel wells white, On C-12 and RC-12.	
21	Locate on outboard side of nose wheel strut, 1/2-in. Vinyl decal. aircraft black letters.	**J** **A** **C** **K**
22	C-12, locate inside inboard cowling doors, both engines, 1/2-in. black letters. RC-12, 1/2-in. aircraft black letters. (C-12 silk screen with ink, gloss black) (RC-12 flat black paint part number G2002 (MFG U.S.Paint))	**LUBE OIL** **MIL-L-23699**
23	C-12, locate a 3-in. black band around fuselage centered on the travel of propeller tip. RC-12, aircraft black band (C-12 gloss black paint part number G2017 (MFG U. S. Paint), (RC-12 flat black paint part number G2002 (MFG U.S.Paint))	**3.0"**
24	C-12, both sides of fwd fuselage, fwd and aft of Code 23, (Use gloss black paint part number G2017 (MFG U.S. Paint) C-12 only) (Use flat black paint part number G2002 (MFG U.S. Paint) RC-12 only)	**DANGER** → ← **DANGER**

Figure 10-1. Exterior Markings, C-12 / RC-12 (Sheet 17 of 22)

CODE NO.	DIRECTIONS	WORDING
25	C-12, bottom of both wings outboard of nacelles, near wing center lines, 1/2-in. and 1/4-in. black letters. RC-12, 1/2-in. and 1/4-in. aircraft black letters C-12 black gloss silkscreen ink. Paint number G2017 black gloss (MFG U.S.Paint). RC-12 aircraft black paint number G2002 (MFG U.S.Paint).	**CAUTION** **USE CARE WHEN WASHING WING TO NOT REMOVE ANTI-CORROSIVE GREASE FROM WING ATTACH BOLT**
26	Locate on front side of nose landing gear strut, 1/2-in. aircraft black letters.	**MIC JACK**
27	C-12, top right wing, inboard of nacelle, on access cover, 1/2-in. black letters. RC-12, 1/2-in. aircraft black letters. C-12 black gloss silkscreen ink. Paint number G2017 black gloss (MFG U.S.Paint). RC-12 aircraft black paint number G2002 (MFG U.S.Paint).	**BATTERY ACCESS**
28	C-12, locate near fuselage on top of both wings, 3 places on right wing, 4 places on left wing. 1/2-in black letters. RC-12, 1/2-in. aircraft black letters. C-12 black gloss silkscreen ink. Paint number G2017 black gloss (MFG U.S.Paint). RC-12 aircraft black paint number G2002 (MFG U.S.Paint).	**NO STEP**
29	Paint a black ground symbol, dimensions per MIL-C-83413/9-2. C-12 black gloss silkscreen ink. Paint number G2017 black gloss (MFG U.S.Paint). RC-12 aircraft black paint number G2002 (MFG U.S.Paint).	
30	RC-12 Only, Paint wing tip pod assembly, As required using anti-static epoxy paint, Flat black, with a transmissivity range of 0.50 to 75 meg ohms resistance per square specification 528-104 with 910-119 w/catalyst.	

Figure 10-1. Exterior Markings, C-12 / RC-12 (Sheet 18 of 22)

CODE NO.	DIRECTIONS	WORDING
31	C-12, top of both wings inboard of nacelles, near wing centerline, 1/2-in. black letters above 1/4-in. black letters. RC-12, aircraft black letters. (C-12 silk screen gloss black, paint number G2017 (MFG U.S.Paint)) (RC-12 flat black paint part number G2002 (MFG U.S.Paint)) Must be readable from leading edge of wing.	**AUX TANK** **USE AVIATION KEROSENE OR SEE PILOTS OPERATING MANUAL FOR ALTERNATES.** **CAPACITY 79.5 US GALLONS (USABLE 79.0 US GALLONS) WITH WINGS LEVEL**
32	C-12, top of both wings outboard of nacelles, 1/2-in. black letters above 1/4-in. black letters. RC-12, aircraft black letters. (C-12 silk screen gloss black, paint number G2017 (MFG U.S.Paint)) (RC-12 flat black paint part number G2002 (MFG U.S.Paint)). Must be readable from leading edge of wing.	**MAIN TANK** **USE AVIATION KEROSENE OR SEE PILOTS OPERATING MANUAL FOR ALTERNATES.** **CAPACITY 195 US GALLONS (USABLE 193 US GALLONS) WITH WINGS LEVEL**
33	Antiglare areas shall be painted aircraft black.	
34	C-12, top of both wings beside inboard and outboard fuel caps, 1/2-in. black letters. RC-12, aircraft black letters. (C-12 silk screen gloss black, paint number G2017 (MFG U.S.Paint)) (RC-12 flat black paint part number G2002 (MFG U.S.Paint))	**FUEL**
35	Paint propeller tips white. See chapter 7	
36	Locate on front nose gear strut. Aircraft black	**TOW** **TURN LIMITS REACHED WHEN RED LINES ALIGN** **DO NOT EXCEED** **CAUTION: DO NOT TOW WITH RUDDER LOCK INSTALLED**
37	C-12, locate on right side of fuselage, below and aft of cargo window, 1/2-in. black letters. RC-12, 1/2-in. aircraft black letters. (C-12 silk screen with ink, paint number G2017 (MFG U.S.Paint)gloss black) (RC-12 flat black paint part number G2002 (MFG U.S.Paint))	EMERGENCY LOCATOR TRANSMITTER SWITCH ON– – OFF– – + ARM– – FOR AVIATION EMERGENCY USE ONLY. UNLICENSED OPERATION UNLAWFUL. OPERATION IN VIOLATION OF FCC RULES SUBJECT TO FINE OR LICENSE REVOCATION.

Figure 10-1. Exterior Markings, C-12 / RC-12 (Sheet 19 of 22)

CODE NO.	DIRECTIONS	WORDING
38	C-12, locate on inboard side of RH nacelle and outboard of LH nacelle, 1/2-in. black letters. (C-12 silk screen, paint number G2017 (MFG U.S.Paint)gloss black) (RC-12 flat black paint part number G2002 (MFG U.S.Paint))	**OIL DRAIN**
39	Locate on outboard side of RH nacelle, 1/2-in. aircraft black letters.	**EXTERNAL POWER RECEPTACLE 28 VDC**
40	C-12, top right wing, just outboard of nacelle, "ACCESS" 1/2-in. black letters, remainder, 1/4-in. black letters. RC-12, 1/2-in. and 1/4-in. black letters.(C-12 silk screen, paint number G2017 (MFG U.S.Paint)gloss black) (RC-12 flat black paint part number G2002 (MFG U.S.Paint))	**ACCESS DC EXTERNAL POWER RELAY DC EXTERNAL POWER CIRCUIT BREAKER**
41	C-12, top right wing, just outboard of nacelle, "ACCESS" 1/2-in. black letters, remainder, 1/4-in. black letters. RC-12, 1/2-in. and 1/4-in. black letters.(C-12 silk screen, paint number G2017 (MFG U.S.Paint)gloss black) (RC-12 flat black paint part number G2002 (MFG U.S.Paint))	**ACCESS BATTERY/EMERGENCY BUS AIR CONDITIONER COMPRESSOR CLUTCH CONTROL BLEED AIR BYPASS VALVE**
42	C-12, right side of fuselage below and aft of cargo window, 1/2-in. black letters. RC-12, 1/2-in. and 1/4-in. aircraft black letters(C-12 silk screen, paint number G2017 (MFG U.S.Paint)gloss black) (RC-12 flat black paint part number G2002 (MFG U.S.Paint))	**OXYGEN**
43	RC-12 only, top of right wing, centered aft of engine nacelle chaff dispenser, 1/2-in. letters. "warning", 1/4-in. reminder, flat black paint part number G2002 (MFG U.S.Paint)	**WARNING SAFETY PIN MUST BE IN WHEN MODULE IS REMOVED OR INSTALLED.**
44	RC-12 only, top of right wing, centered aft of engine nacelle chaff dispenser, 1/2-in. aircraft black letters.	**NO FLARES**
45	RC-12 only, top of left wing behind safety pin receptacle. 1/2-in. upper and 1/4-in. lower, flat black paint part number G2002 (MFG U.S.Paint)	**CHAFF/FLARE SAFETY SWITCH** **INSERT SAFTY PIN BEFORE MODULES ARE REMOVED OR INSTALLED. CAUTION: REMOVE PIN BEFORE FLIGHT.**

Figure 10-1. Exterior Markings, C-12 / RC-12 (Sheet 20 of 22)

CODE NO.	DIRECTIONS	WORDING
46	RC-12 only, right side of fuselage centered 1.5 in. above test connector receptacle centerline. 1/2-in. aircraft black letters. (Use flat black paint part number G2002 (MFG U.S. Paint)	**M-130 TEST CONNECTOR**
47	C-12, bottom of both nacelles, 1/2-in. black letters. C-12 and RC-12, 1/2-in. aircraft black letters. (Use silk screen gloss black paint number G2017(MFG U.S.Paint) C-12 only) (Use flat black paint part number G2002 (MFG U.S. Paint) RC-12 only)	**STANDBY PUMP DRAIN**
48	C-12, bottom of both engine nacelles, 1/2-in. black letters. RC-12, 1/2-in. aircraft black letters. (Use silk screen gloss black paint number G2017(MFG U.S.Paint) C-12 only) (Use flat black paint part number G2002 (MFG U.S. Paint) RC-12 only)	**FILTER DRAIN**
49	C-12, bottom of both nacelles, 1/2-in. black letters. RC-12, 1/2-in. aircraft black letters. (Use silk screen gloss black paint number G2017(MFG U.S.Paint) C-12 only) (Use flat black paint part number G2002 (MFG U.S. Paint) RC-12 only)	**STRAINER DRAIN**
50	C-12, bottom of both wings, inboard of nacelles near fuselage, and outboard of nacelles, 1/2-in. black letters. 4 required. RC-12, 1/2-in. aircraft black letters. (Use silk screen gloss black paint number G2017(MFG U.S.Paint) C-12 only) (Use flat black paint part number G2002 (MFG U.S. Paint) RC-12 only)	**FUEL DRAIN**
51	C-12, bottom aft ends of both engine nacelles, 1/2-in. black letters. RC-12, 1/2-in. aircraft black letters. (Use silk screen gloss black paint number G2017(MFG U.S.Paint) C-12 only) (Use flat black paint part number G2002 (MFG U.S. Paint) RC-12 only)	**GRAVITY LINE DRAIN**
52	Do not paint these areas.	
53	Left side of aircraft aft of cabin door, 1/2-in. aircraft black letters. (Use silk screen gloss black paint number G2017(MFG U.S.Paint) C-12 only) (Use flat black paint part number G2002 (MFG U.S. Paint) RC-12 only)	**PRESSURIZED**
54	Locate under access plates on top and bottom of both wings near inboard and outboard wing mating surfaces. "WARNING", 1/2-in. aircraft black letters, remainder, 1/4-in. aircraft black letters. See Detail A. (Use silk screen gloss black paint number G2017(MFG U.S.Paint) C-12 only) (Use flat black paint part number G2002 (MFG U.S. Paint) RC-12 only)	**WARNING LUBRICATED BOLTS — — — — — — — — — — — — SEE MAINT. MANUAL FOR TORQUE VALUES**
55	Top left side of nose, 1/2-in. aircraft black letters. (Use flat black paint part number G2002 (MFG U.S. Paint)	**SIGHT GAUGE**
56	RC-12 only. Left wing just outboard of engine nacelle, near leading edge, 1/2-in. aircraft black letters. (Use flat black paint part number G2002 (MFG U.S. Paint)	**ACCESS AC EXTERNAL POWER RELAY AC EXTERNAL POWER CIRCUIT BREAKER**

Figure 10-1. Exterior Markings, C-12 / RC-12 (Sheet 21 of 22)

CODE NO.	DESCRIPTION	WORDING
57	RC-12 only. Top of left wing just outboard of engine nacelle near wing centerline. 1/2-in. aircraft black letters. (Use .at black part number G2002 (MFG U.S. Paint) RC-12 only).	**ACCESS INVERTER 115 VAC 3Ø**
58	Inboard bottom of left wing near fuselage and leading edge, 1/2-in. aircraft black letters. (Use gloss black paint number G2017 (MFG U.S. Paint) C-12 only) (Use flat black part number G2002 (MFG U.S. Paint) RC-12 only)	**ACCESS BLEED AIR BYPASS VALVE AVIONIC INVERTER & CONTROL RELAY**
59	DELETED	
60	RC-12, Bottom, outboard side of left engine nacelle. 1/2-in. aircraft black letters. (Use gloss black paint number G2017 (MFG U.S. Paint) (Use flat black part number G2002 (MFG U.S. Paint) RC-12 only)	**EXTERNAL POWER RECEPTACLE 115 VDC 3Ø, 400 Hz AC**

Figure 10-1. Exterior Markings, C-12 (Sheet 22 of 22)

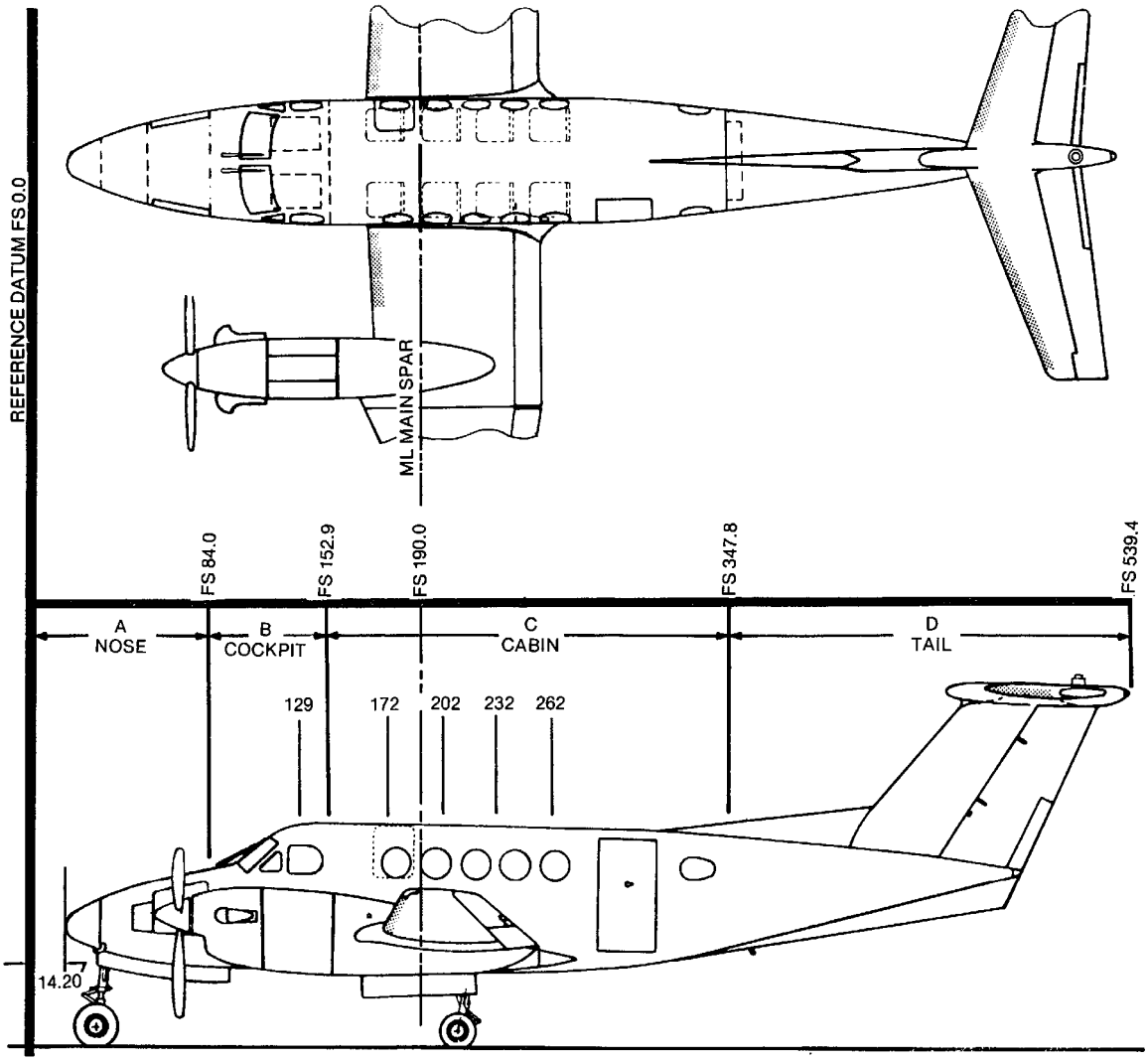

Figure 10-2. Station Diagram, C-12

DELETED pages 10-25 through 10-30

SECTION III DELETED

DELETED pages 10-33 thru 10-54

SECTION IV DELETED

DELETED pages 10-57 thru 10-64

SECTION V DELETED

All data on page 10-66 has been deleted.

SECTION VI DELETED

DELETED pages 10-69 thru 10-76

SECTION VII DELETED

DELETED pages 10-79 thru 10-88

SECTION VIII U-21 AND RU-21 ILLUSTRATIONS

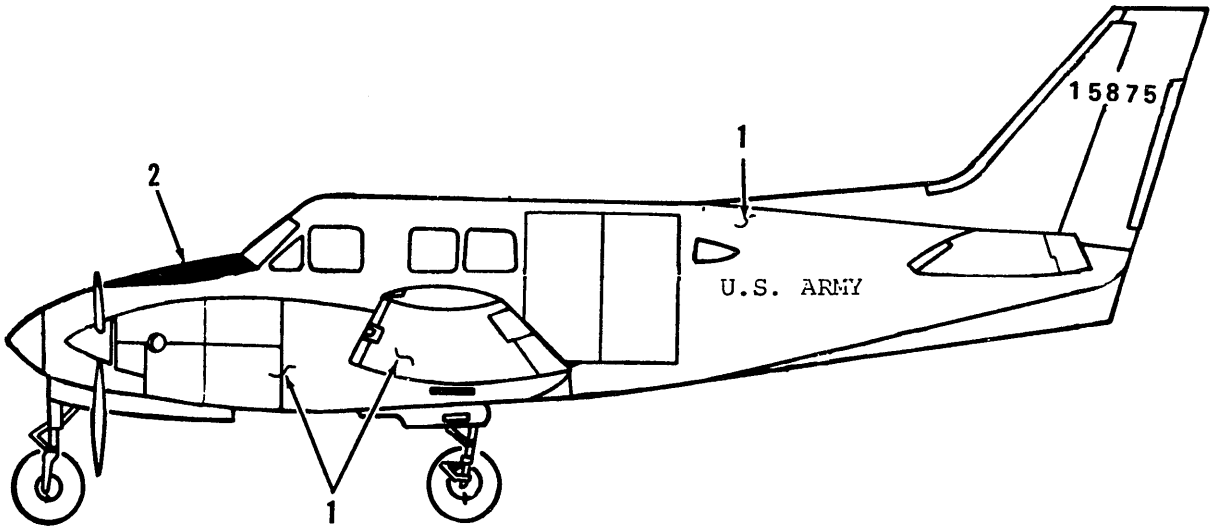

LEFT SIDE VIEW

1. MIL-DTL-64159 or MIL-DTL-53039, aircraft gray (entire aircraft, except where noted).
2. MIL-DTL-64159 or MIL-DTL-53039, aircraft Black.

Figure 10-18. Tactical Paint Scheme, RU-21 (Sheet 1 of 2)

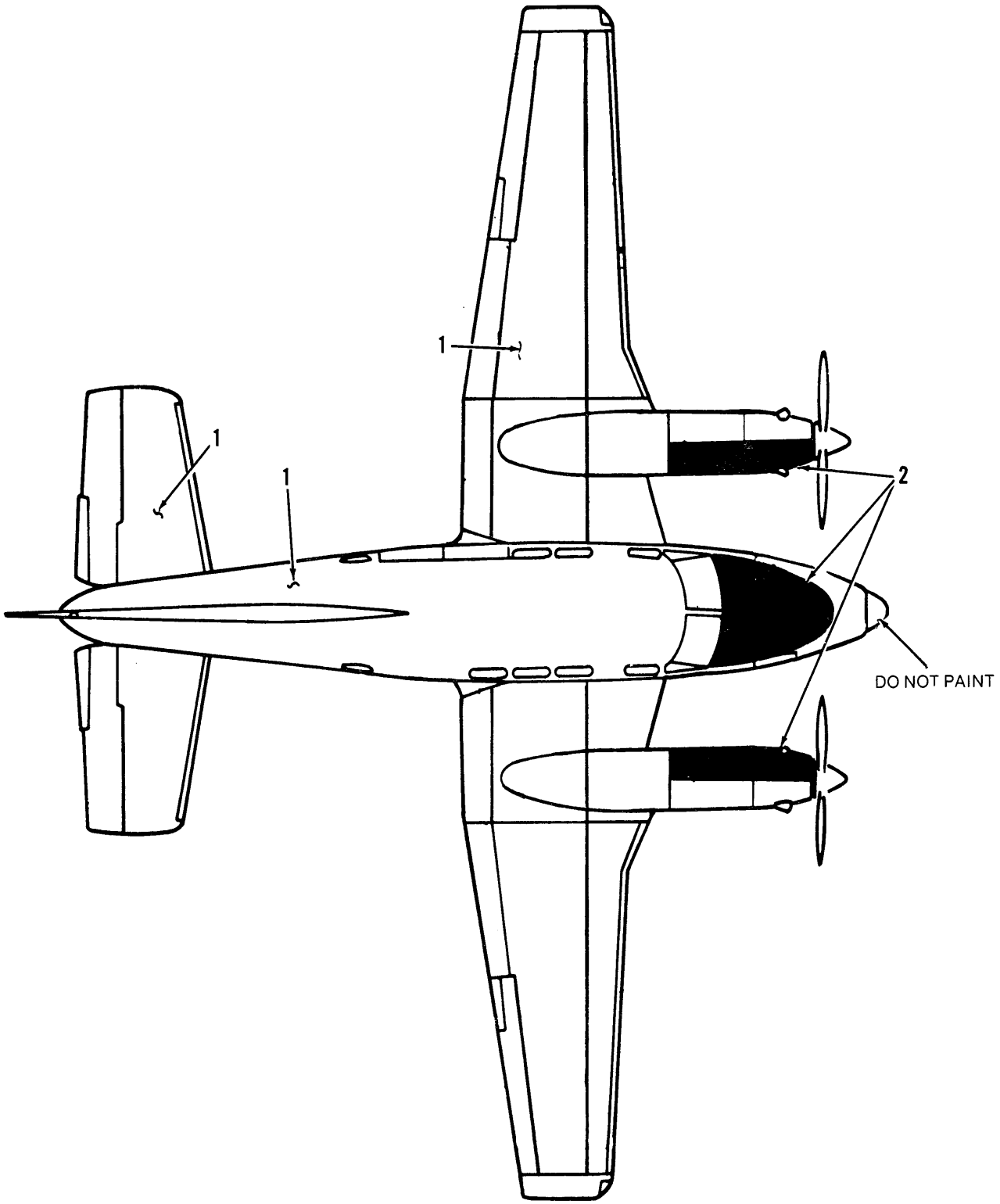

Figure 10-18. Tactical Paint Scheme, RU-21 (Sheet 2 of 2)

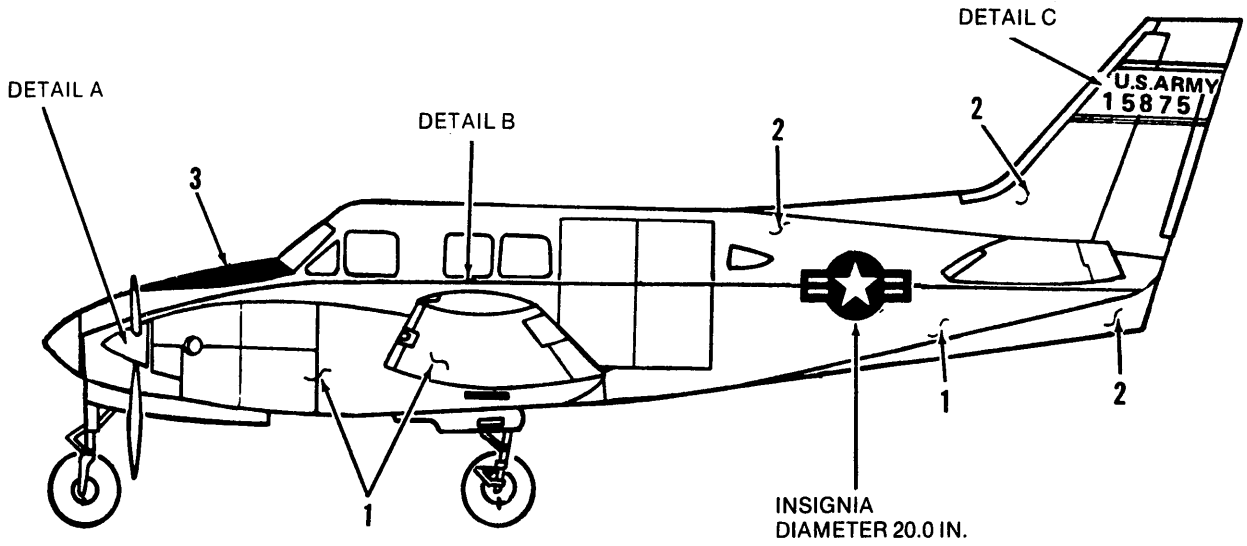

LEFT SIDE VIEW

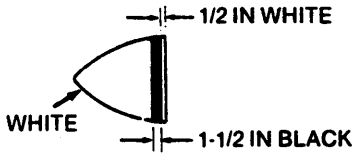

DETAIL A

1. MIL-C-83286, gloss olive drab, #14087.
2. MIL-C-83286, gloss white, #17875.
3. MIL-DTL-64159 or MIL-DTL-53039, aircraft black.

Figure 10-19. Non-Tactical Paint Scheme, U-21 (Sheet 1 of 4)

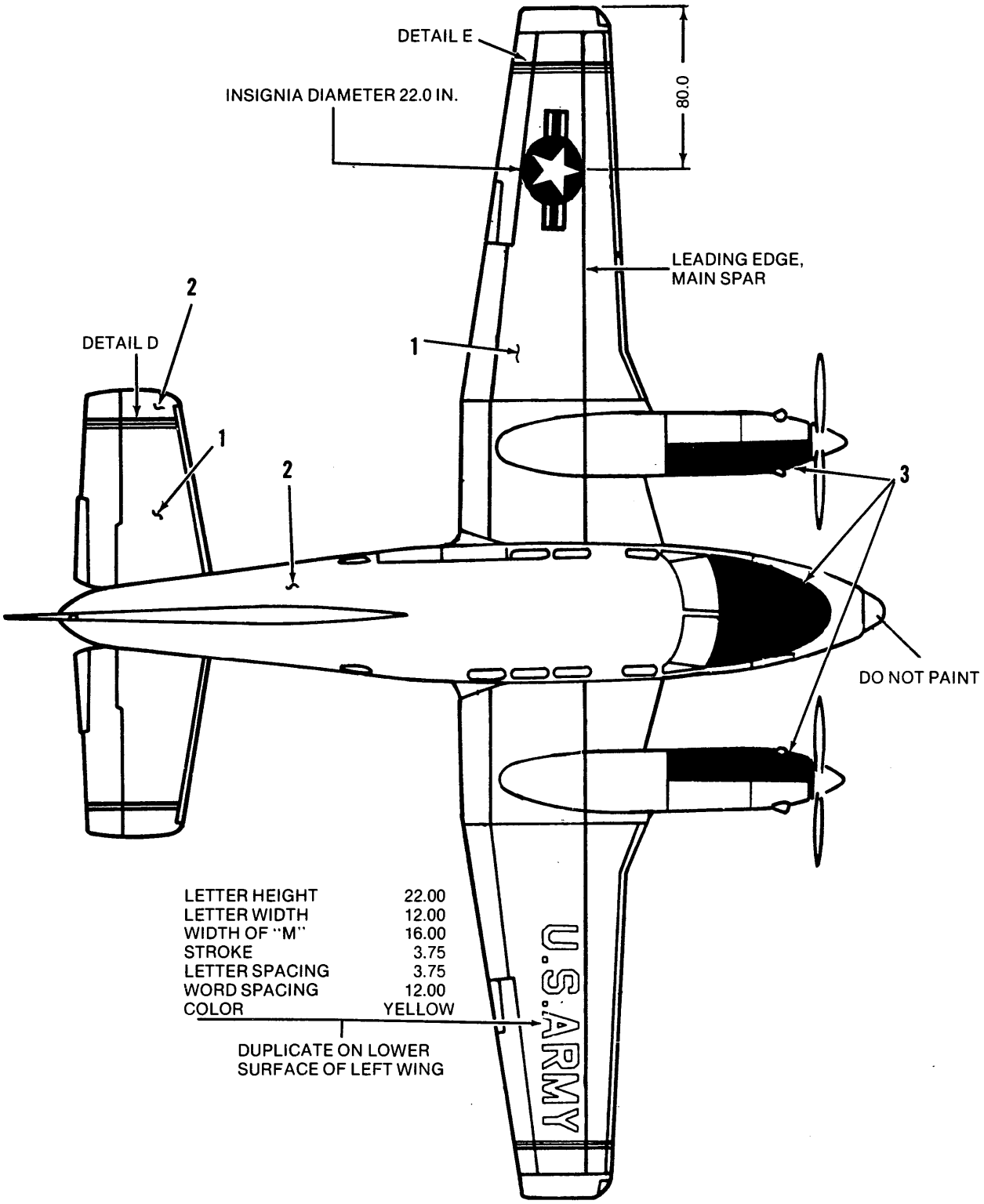

Figure 10-19. Non-Tactical Paint Scheme, U-21 (Sheet 2 of 4)

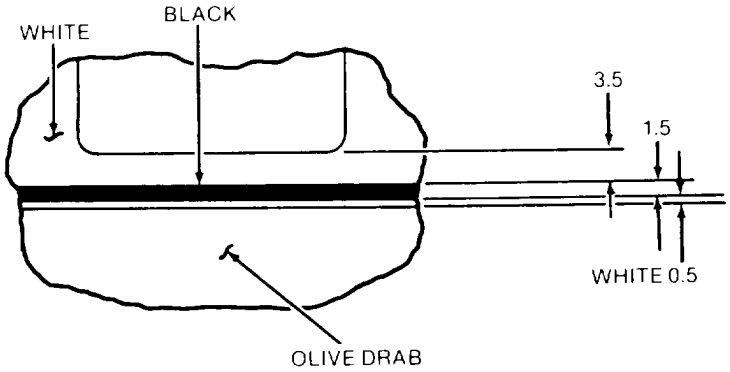

DETAIL B

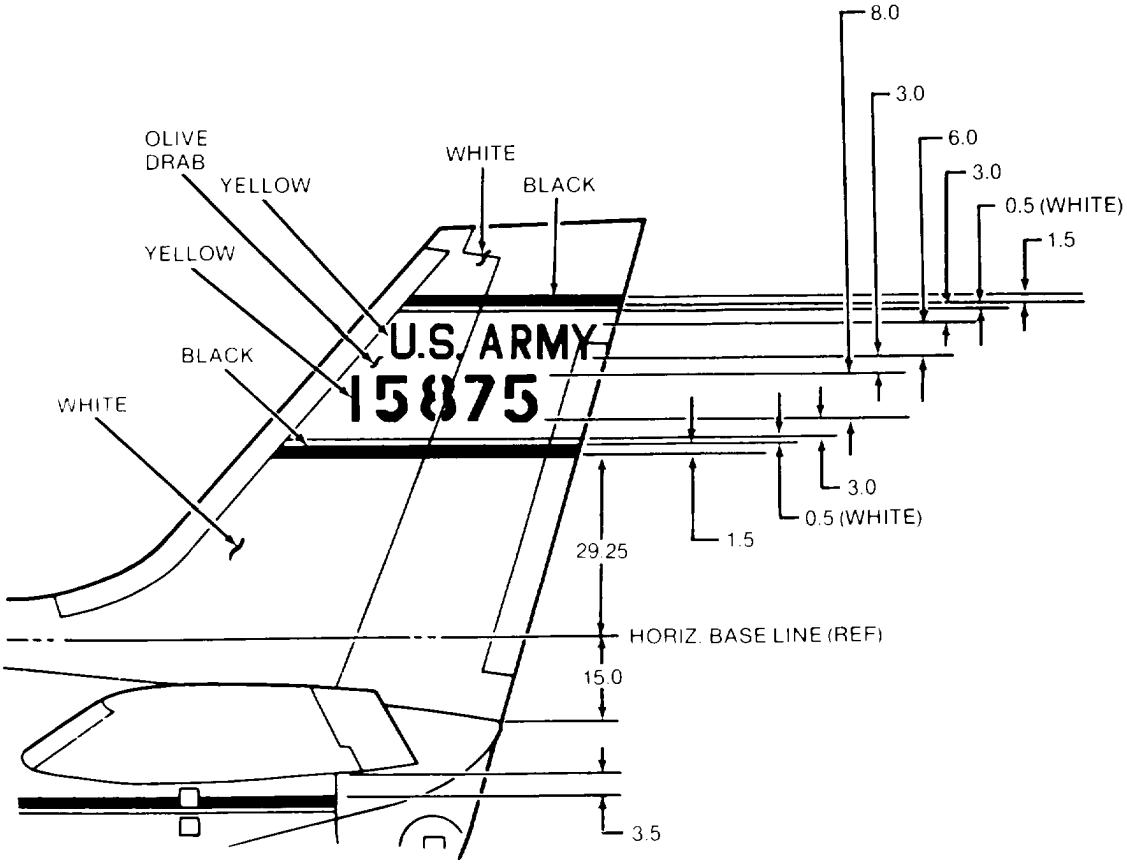

DETAIL C

NOTE PAINTS REFERENCED ABOVE ARE GLOSS. PER MIL-C-83286.

Figure 10-19. Non-Tactical Paint Scheme. U-21 (Sheet 3 of 4)

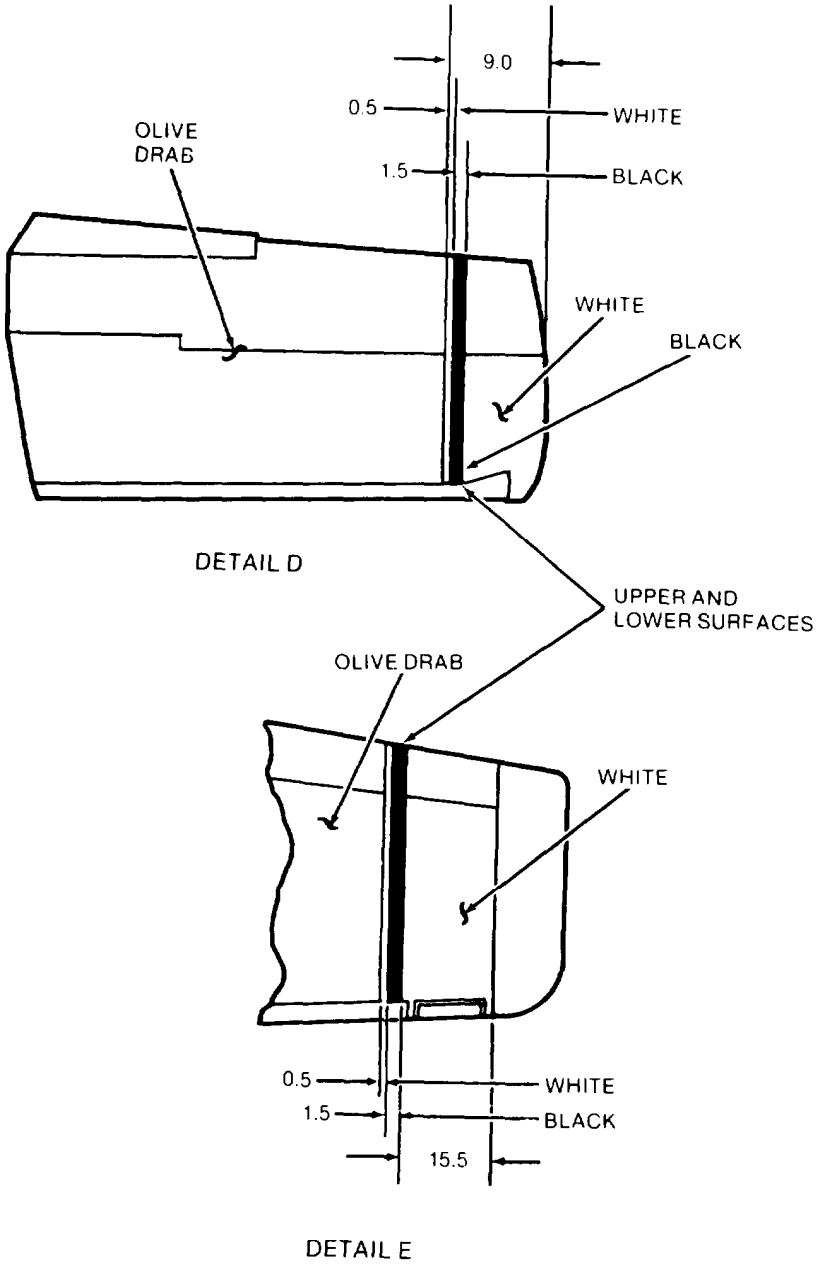

NOTE: PAINTS REFERENCED ABOVE ARE GLOSS, PER MIL-C-83286.

Figure 10-19, Non-Tactical Paint Scheme, U-21 (Sheet 4 of 4)

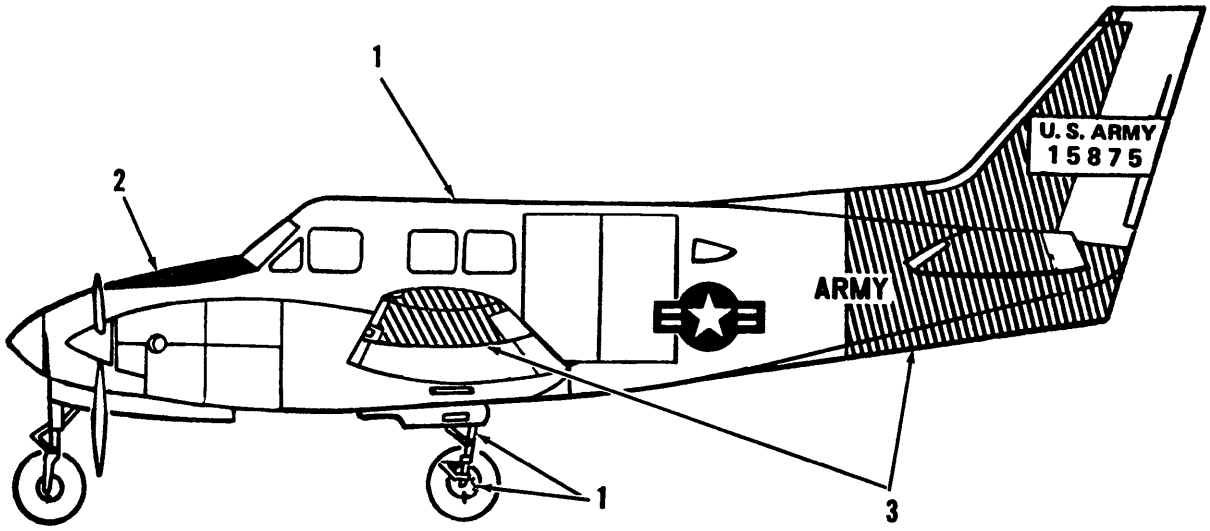

LEFT SIDE VIEW

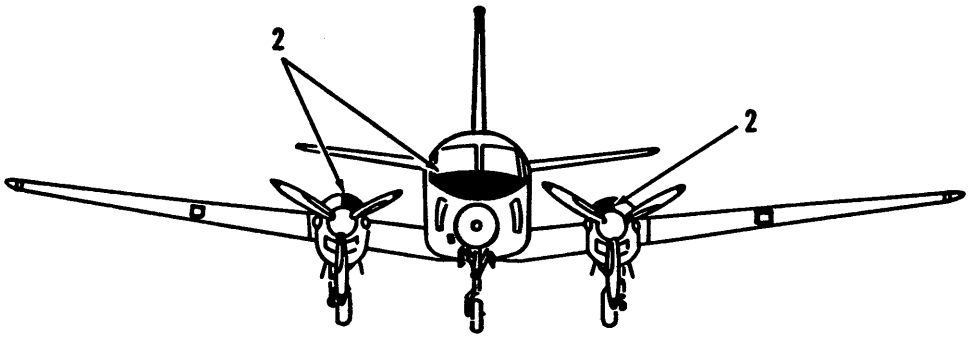

FRONT VIEW

1. MIL-C-83286, gloss white, #17875.
2. MIL-DTL-64159 or MIL-DTL-53039, aircraft black.
3. MIL-P-21600, .ourescent red-orange, ANA #633 (only where authorized.)

Figure 10-20. Non-Tactical, High Visibility Paint Scheme, U-21 (Sheet 1 of 2)

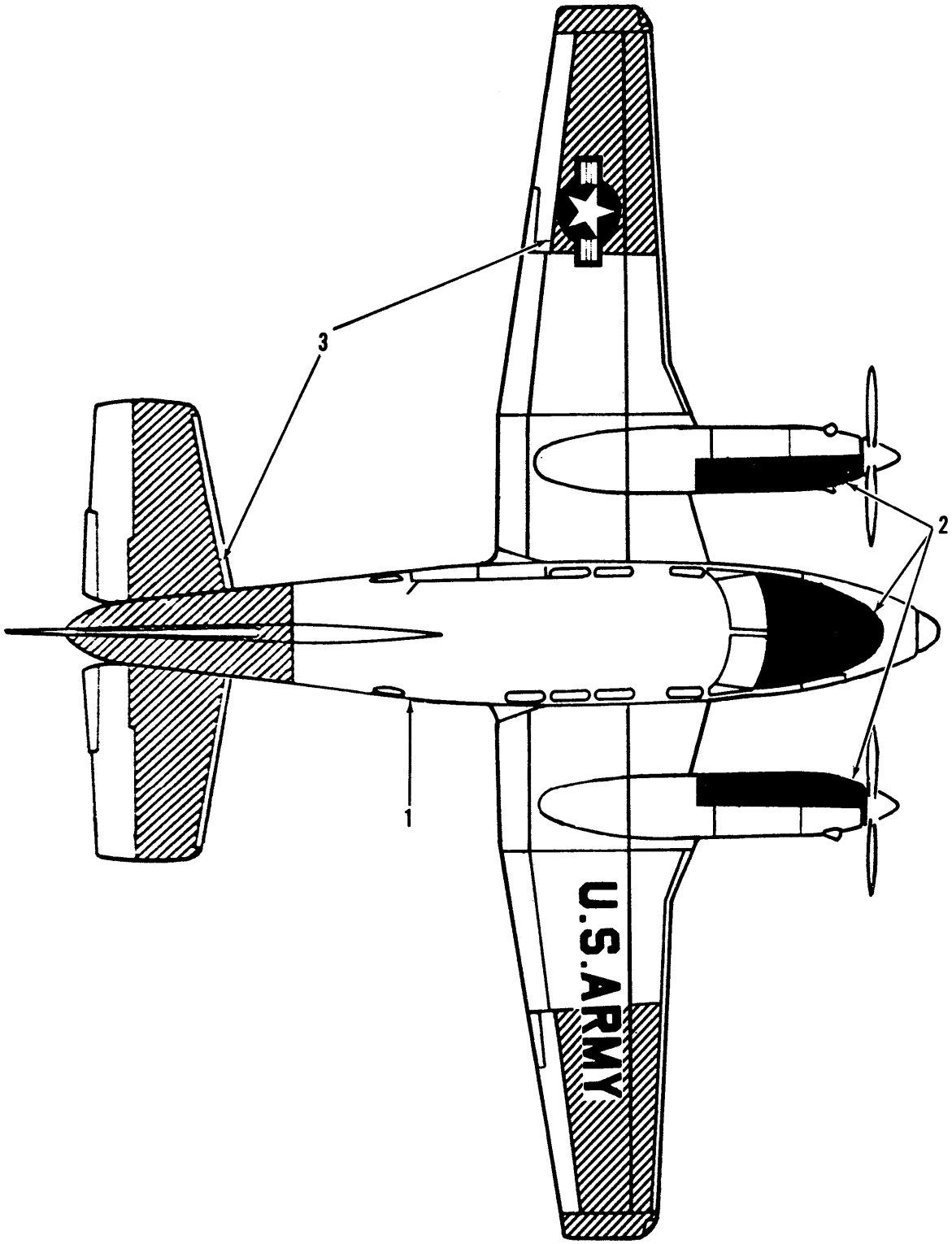

Figure 10-20. Non-Tactical, High Visibility Paint Scheme, U-21 (Sheet 2 of 2)

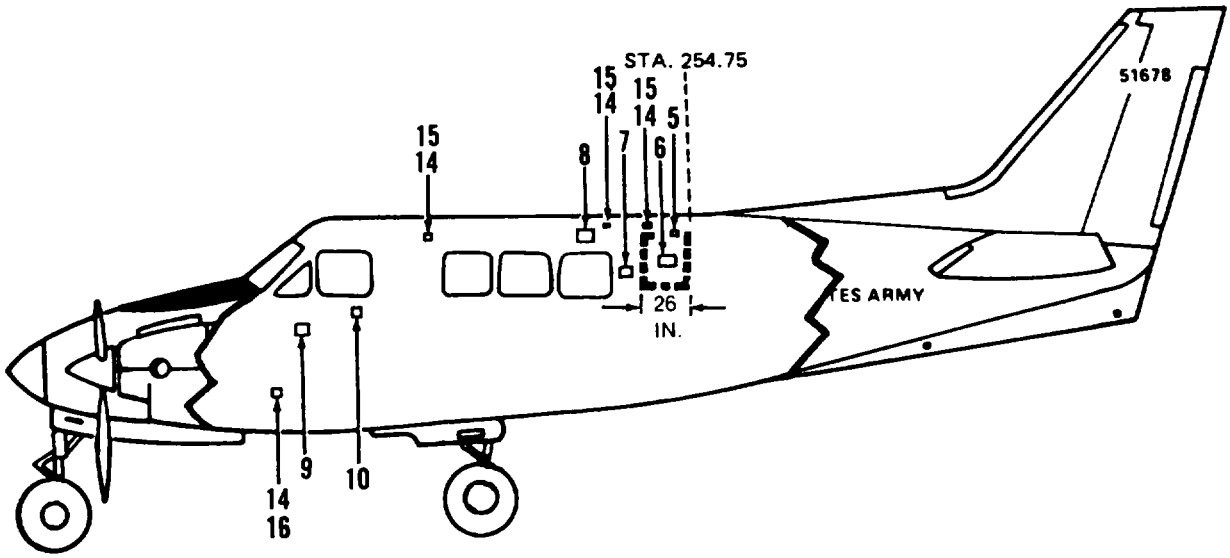

RIGHT SIDE VIEW

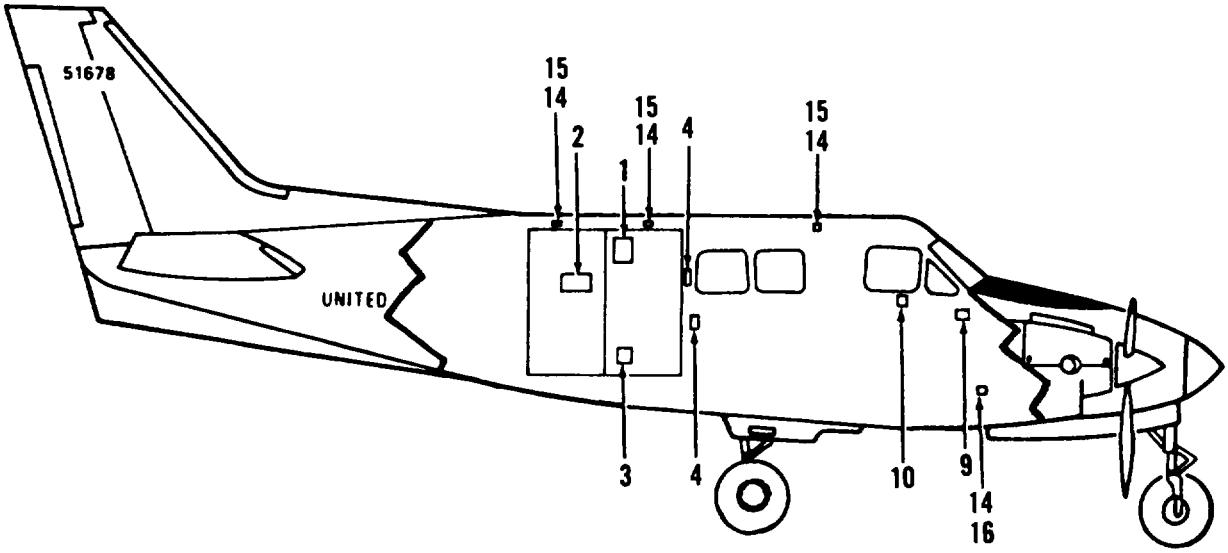

LEFT SIDE VIEW

Figure 10-21. Interior Markings, U-21 and RU-21 (Sheet 1 of 5)

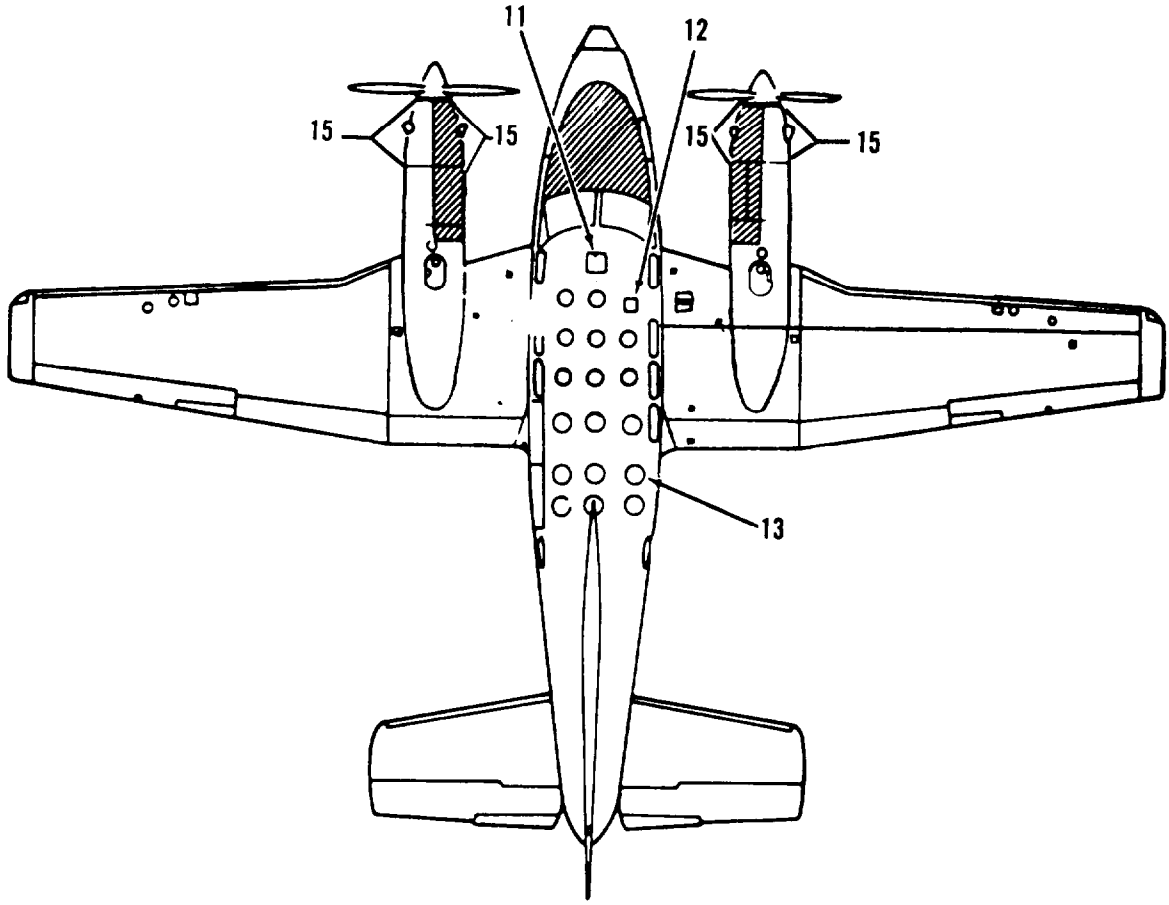

TOP VIEW

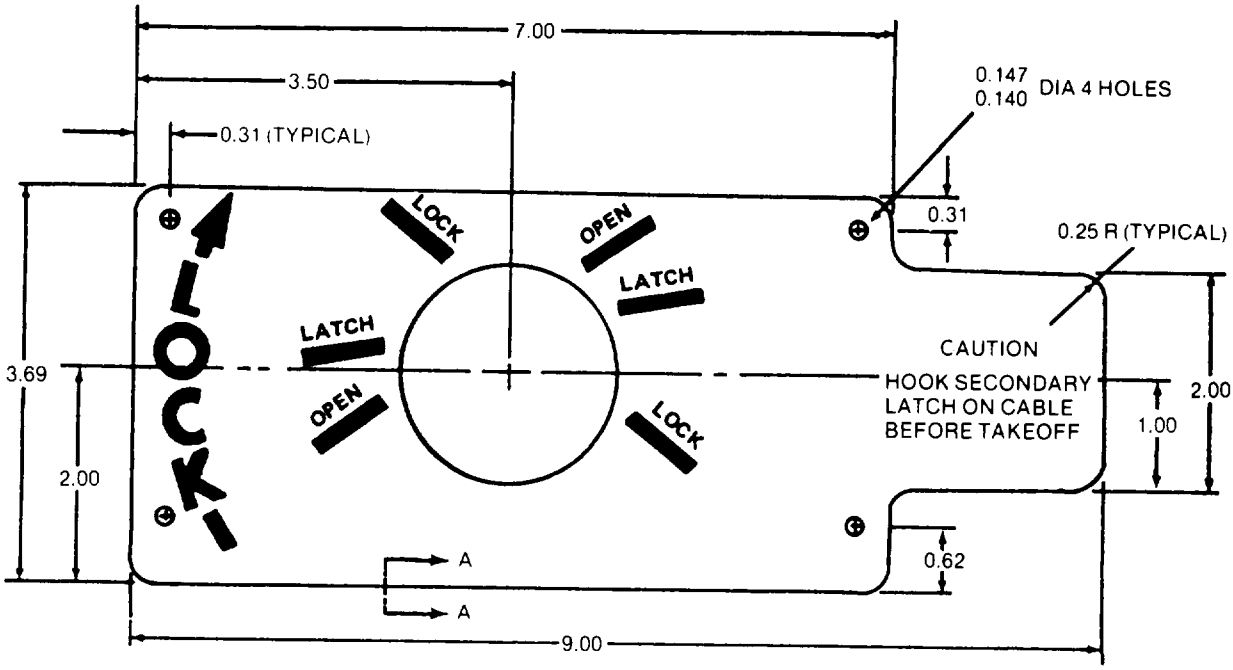

DETAIL A

Figure 10-21. interior Markings, U-21 and RU-21 (Sheet 2 0f 5)

CODE NO.	DIRECTIONS	WORDING
1	Locate placard top edge of door forward of STA 228.75	CARGO DOOR LATCH INSIDE PULL LATCH HANDLE OUT AND DOWN TO UNLOCK CAUTION: LATCH PIN UP AND COVER LOCKED FOR FLIGHT
2	Locate placard over center of door shaft. Background yellow. Cover placard with 0.12 in. acrylic plastic sheet 3.70 in. by 9.0 in., bevel edges of plastic sheet 45° (See detail A)	
3	Locate placard bottom edge of door forward of STA 228.75	CARGO DOOR LATCH INSIDE PULL LATCH HANDLE OUT AND UP TO UNLOCK CAUTION: LATCH PIN DOWN AND COVER LOCKED FOR FLIGHT
4	Locate placards forward of cargo door. Top placard is aligned with bottom of window frame, bottom placard is directly below top placard an above floor (approx.)	REMOVE FOR ACCESS TO CARGO DOOR HINGE
5	Paint inside of right fuselage skin and face of upholstery panel at the same location as the exterior markings, STA 254.75 WL 120,0 to WL 146.0. Marking will be yellow, shade No. 13538	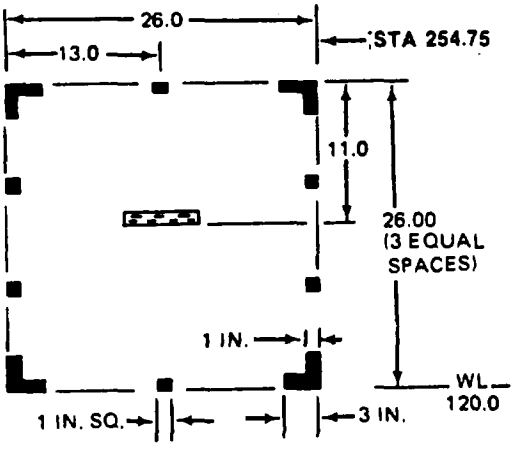

Figure 10-21. Interior Markings, U-21 and RU-21 (Sheet 3 of 5)

CODE NO.	DIRECTIONS	WORDING
6	Locate decal in center of emergency exit markings (code No. 5) and 11 in. from top edge of markings. Black letters on yellow background.	CUT HERE FOR EMERGENCY EXIT 2.50 IN. 13.50
7	Locate EMERGENCY DOOR RELEASE placard aft of escape hatch and below handle, right side fusleage.	EMERGENCY DOOR RELEASE OPEN COVER PUSH BUTTON AND PULL HANDLE 2 3/8 2 IN.
8	‘Center decal above escape latch and on STA 228.75.	EMERGENCY EXIT
9	Right side of aircraft on static air line drain door.	
10	Right side of aircraft cockpit aft of STA 122.0 and 0.75 in. forward of inertia reel harness lock on inboard surface of window escutcheon.	CO-PILOT SEAT MUST BE IN FORWARD POSITION DURING TAKE . OFF& LANDING
11	Locate placard on fuselage floor, centered on STA 130.0 and left edge of placard 6.2 in. left of aircraft centerline. Placard is metal etched on anodized red background.	5.00 0.50 3.00 LANDING GEAR EMERGENCY EXTENSION 1. PULL UP HANDLE AND TURN CLOCKWISE TO LOCK 2. REMOVE LEVER FROM SECURING CLIP AND PUMP

Figure 10-21. Interior Markings, U-21 and RU-21 (Sheet 4 of 5)

CODE NO.	DIRECTIONS	WORDING
12	Locate decal on aft side of spar cover and 11 in. to right of aircraft centerline	**MAXIMUM LOAD PER TIEDOWN: 200 LB.**
13	Center decals in tiedown fittings as shown, top of letters foward. Lettering is black. F.S. 145.0 F.S. 146.0 F.S. 163.8 F.S. 165.4 F.S. 179.8 F.S. 181.5 F.S. 199.7 F.S. 200.6 F.S. 218.7 F.S. 219.6 F.S. 239.2 F.S. 239.9 F.S. 240.2	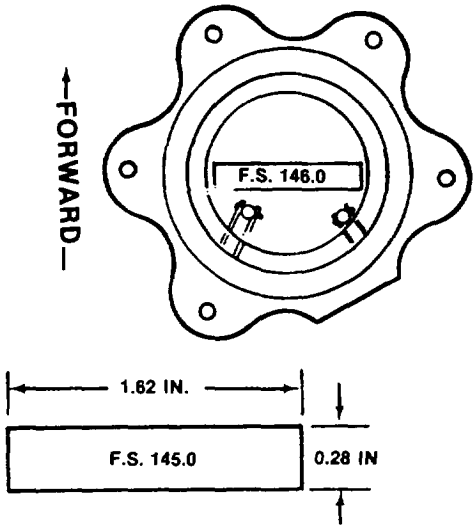
14	Locate marking near each oxygen outlet. Warning l/4-in. letters, text l/8-in. gloss red letters on yellow background.	**WARNING** **NO SMOKING WHILE OXYGEN IN USE**
15	Passenger oxygen outlet	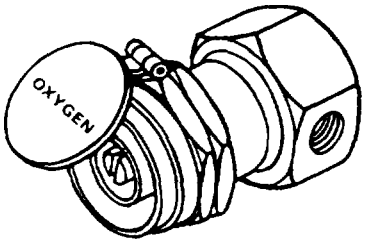
16	Pilot and copilot's Diluter demand regulator	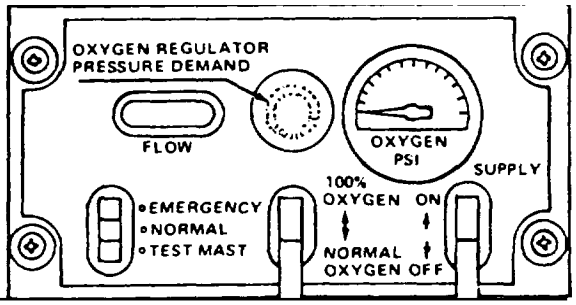

Figure 10-21. Interior Markings, U-21 and RU-21 (Sheet 5 of 5)

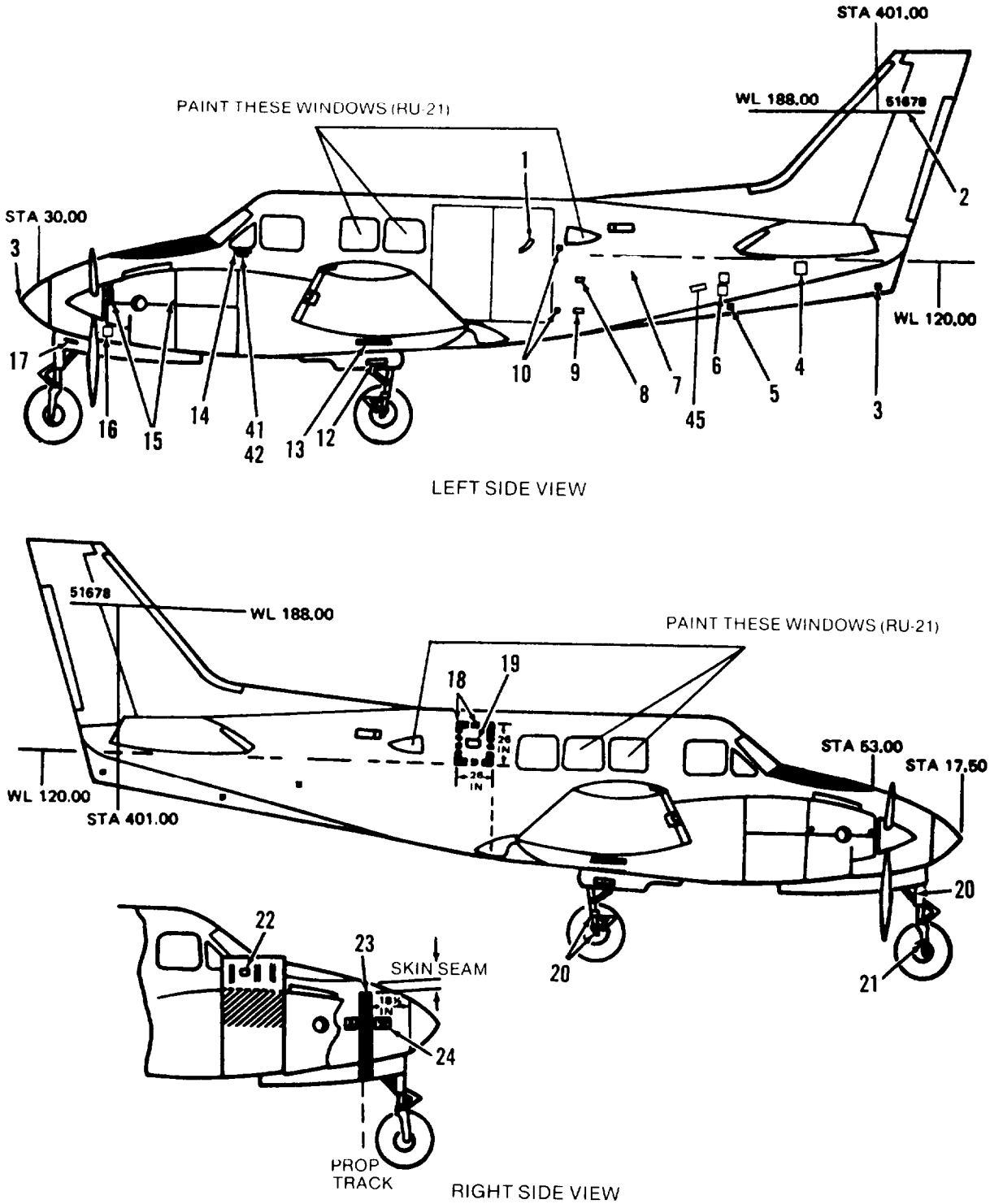

Figure 10-22. Exterior Markings, U-21 and RU-21 (Sheet 1 of 13)

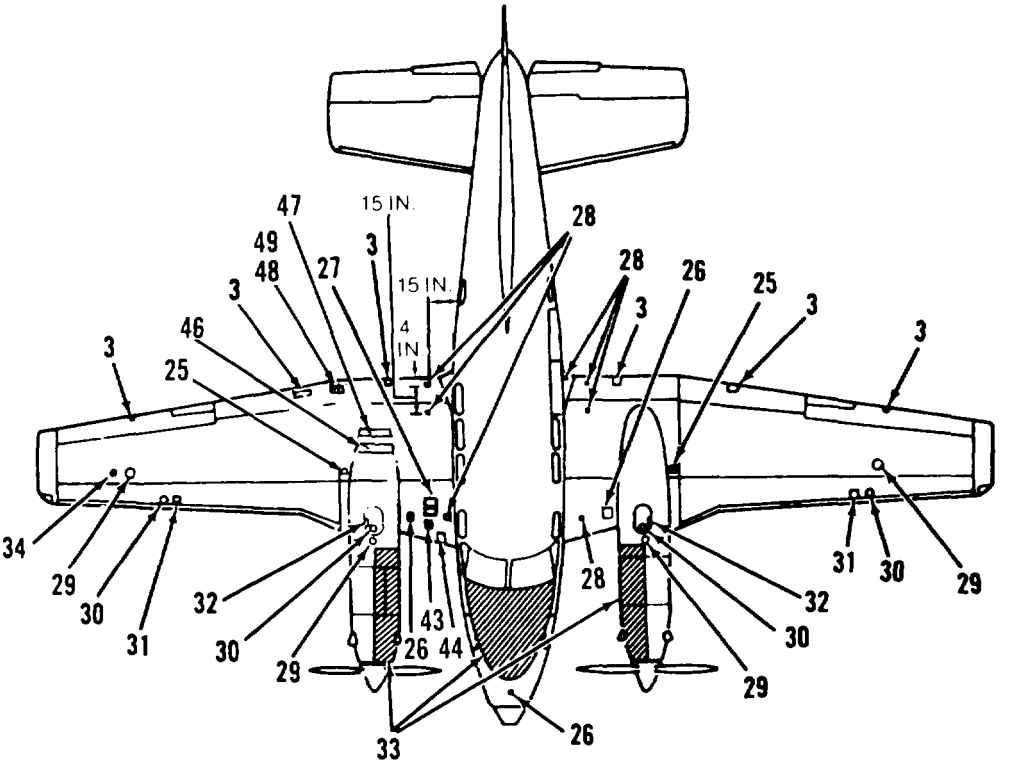

TOP VIEW

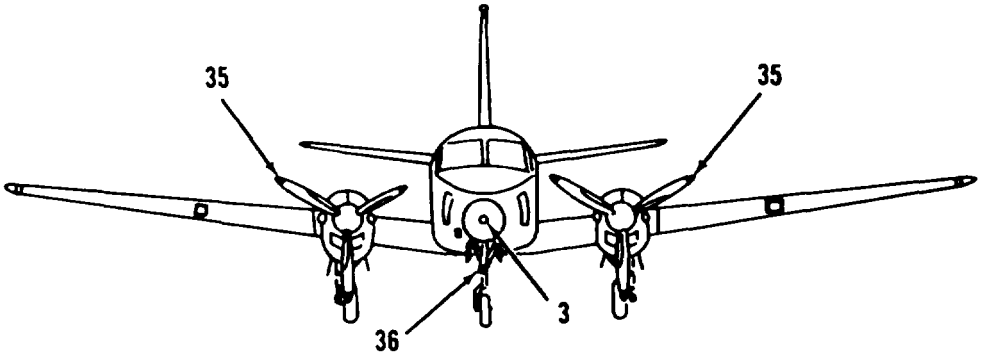

FRONT VIEW

Figure 10-22. Exterior Markings, U-21 and RU-21 (Sheet 2 of 13)

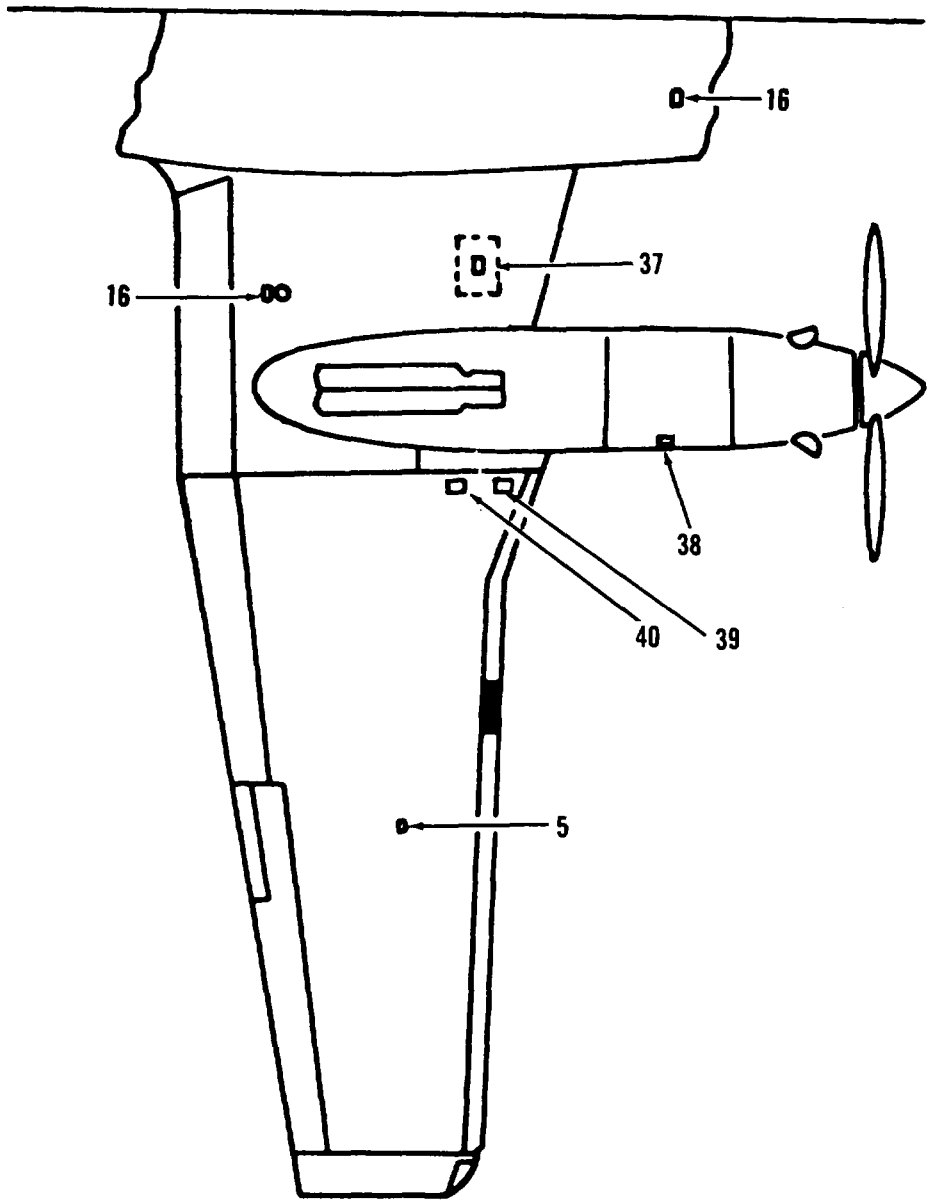

BOTTOM VIEW — LEFT SIDE

Figure 10-22 Exterior Markings. U-21 and RU-21 (Sheet 3 of 13)

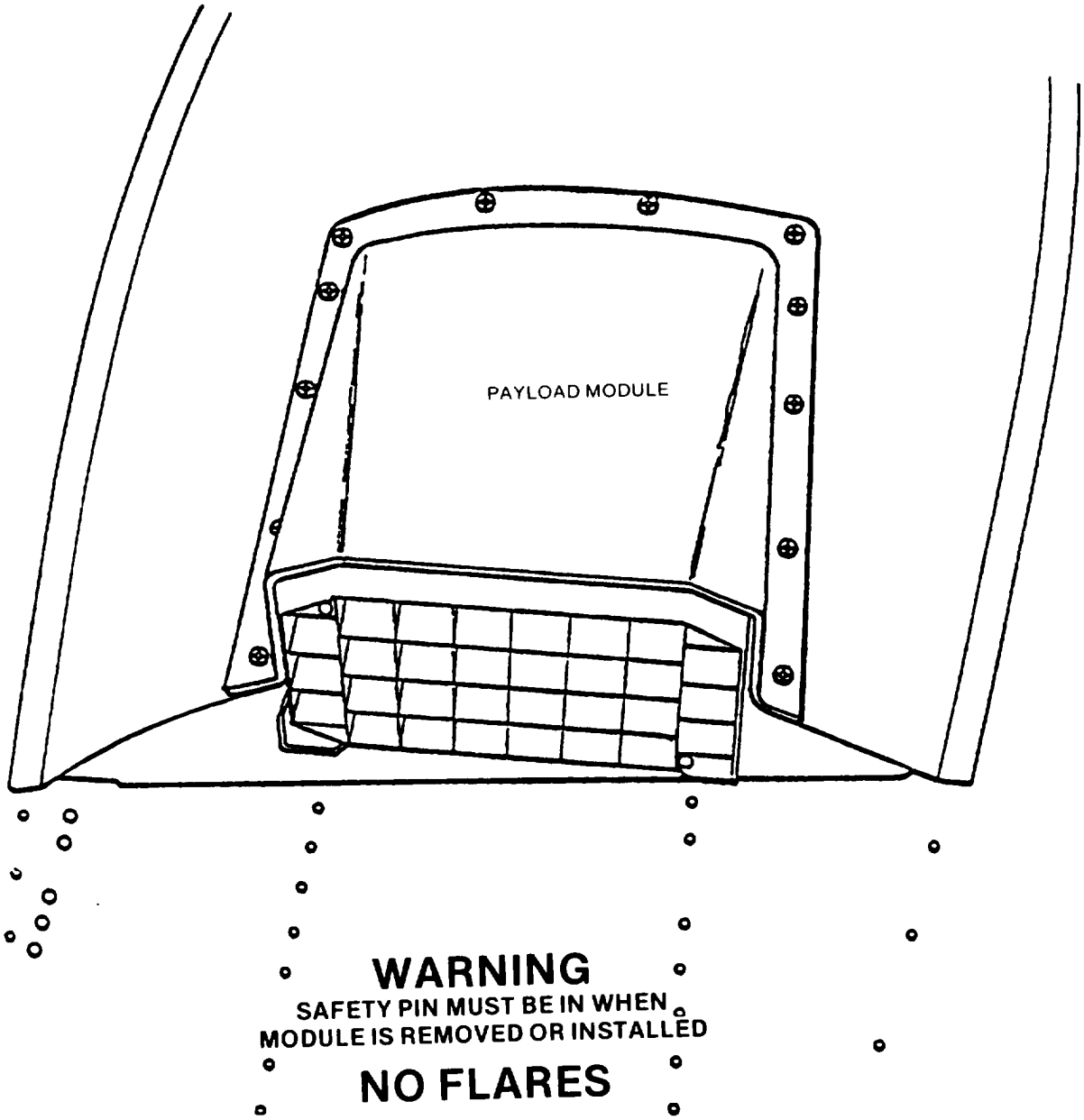

Installation of Aft Nacelle Fairing, Decal, and Payload Module

DETAIL A

Figure 10-22. Exterior Markings. U-21 and RU-21 (Sheet 4 of 13)

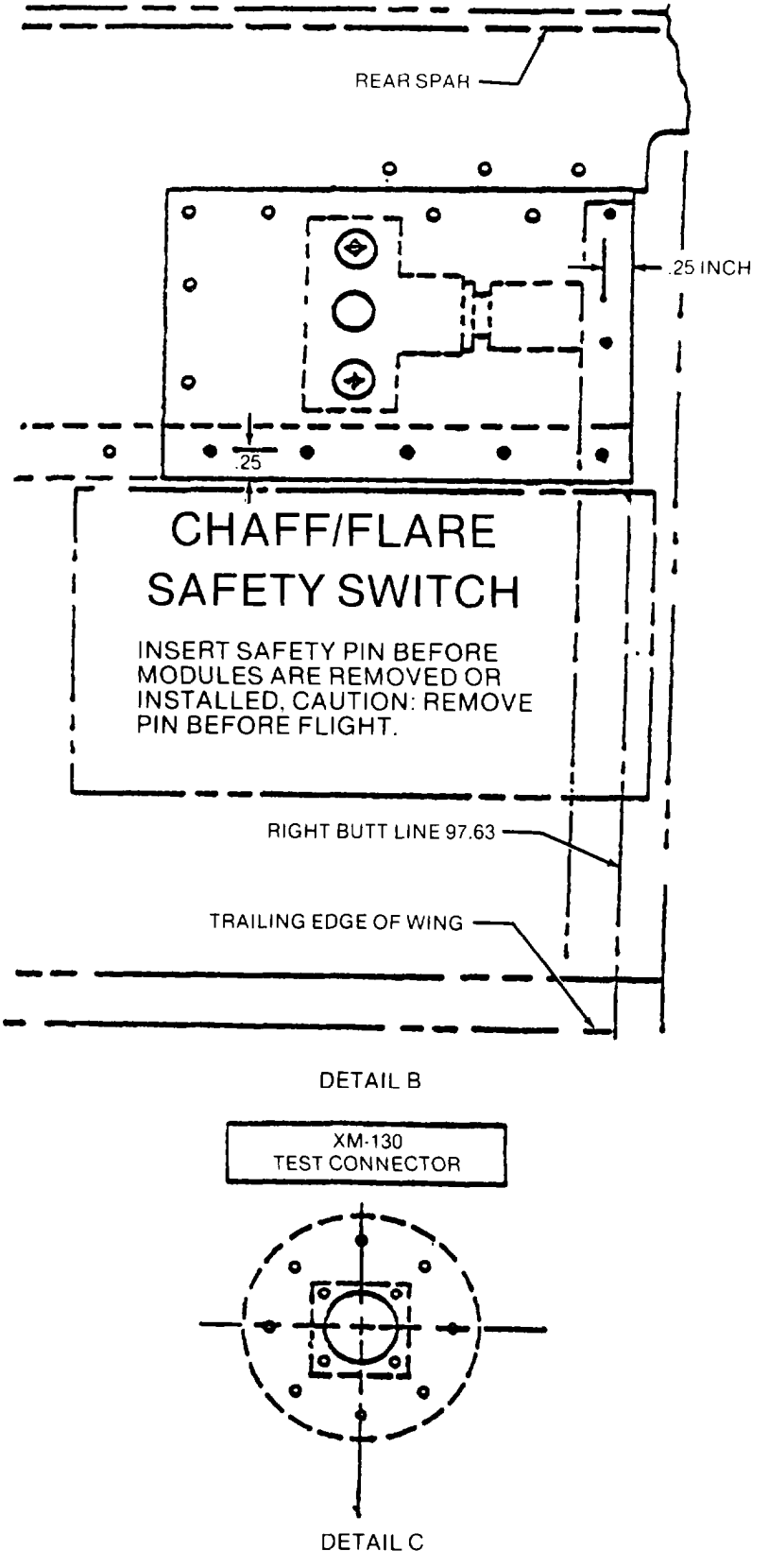

Figure 10-22. Exterior Markings, U-21 and RU-21 (Sheet 5 of 13)

CODE NO.	DIRECTIONS	WORDING
	NOTE Only MIL-C-46168 paints will be used on RU-21 aircraft unless otherwise specified.	
	Left side of fuselage on entrance air step door, adjacent to handle, 1/2-in. black letters and arrow. Lines are 1/8 in. wide, arrowhead 3/8 in. wide.	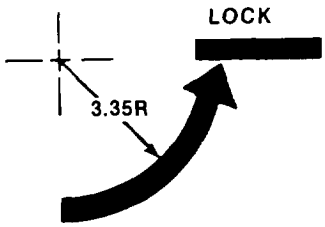
2	RADIO CALL NUMBERS Left and right side of vertical stabilizer, 6-in. lusterless black numerals, STA 401.00, WL 188.00.	
3	Both sides of ventral fin, center top trailing edge of each aileron, also center on nose cone using black letters.	**NO PUSH**
4	Aircraft data plate located on left side of aircraft under horizontal stabilizer.	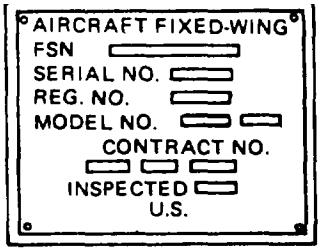
5	Left and right side of aft fuselage and bottom center of each outboard wing panel. Black 1/2-in. letters. Top of letters up or towards spar.	**TIE DOWN**
6	Left and right side of fuselage below static port, 1/2-in. black letters. Do not paint static port.	**STATIC AIR KEEP CLEAN**

Figure 10-22. Exterior Markings, U-21 and RU-21 (Sheet 6 of 13)

CODE NO.	DIRECTIONS	WORDING
7	U-21, both sides of fuselage, 20 in. dia. basic blue circle, center vertically. Bottom of top star frame in line with green/white seam. RU-21, left and right side of fuselage, 6-in. black letters. Center between aft edge of cabin door and line even with front of horizontal stabilizer. Top of letters on WL 120.0.	**(National Star Insignia)** **U.S. ARMY**
8	Left side of fuselage aft of entrance door frame, 1/2-in. black letters.	**FIRE EXTINGUISHER INSIDE**
9	Left side of fuselage aft of entrance door frame, 1/2-in. black letters.	**BATTERY LOCATION TOP OF RIGHT HAND WING STUB**
10	Left side of fuselage aft of entrance door frame, 1/2-in. black letters.	**LEVEL POINT**
11	U-21, top of left wing, bottom of right wing - A 22 in. dia. basic blue circle centered 80 in. inboard of wingtip. Point of star facing fwd.	**(National Star Insignia)**
12	Left and right side of fuselage on each outboard main gear door, 1/2-in. black letters.	**NORMAL PRESSURE 46-50 P.S.I.**
13	Left and right side of fuselage under wing and on outboard side of each nacelle above main landing gear doors. Black 1/2-in. letters.	**CAUTION: DISCONNECT ELECTRICAL WIRING AND PLUMBING BEFORE REMOVING WING**
14	Left side of fuselage under cockpit window, 1 in. black letters and numerals. Enter complete model and aircraft serial number.	**U.S. ARMY * U.S.A. SERIAL NO. * (*Indent correct model and serial numbers)**
15	Left and right side of forward engine cowling. Black 1/8 in. lines and arrow, 1/2-in. black letters, 4 places.	

Figure 10-22. Exterior Markings, U-21 and RU-21 (Sheet 7 of 13)

CODE NO.	DIRECTIONS	WORDING
16	Aft end of nose wheel well and left of fuselage centerline. Two jack pads located on bottom of wing stub near rear spar and inboard of each engine nacelle. Black 1/2-in. letters.	**JACK PAD**
17	Locate on inboard side of left nose gear door, 1/2-in. black letters.	**NORMAL TIRE PRESSURE 50-55 P.S.I.** **VERY SOFT FIELD TAKEOFF 30-32 P.S.I.**
18	U-21, paint yellow emergency rescue markings on right side of fuselage at STA 254.75 WL 120.0. RU-21, paint lusterless black.	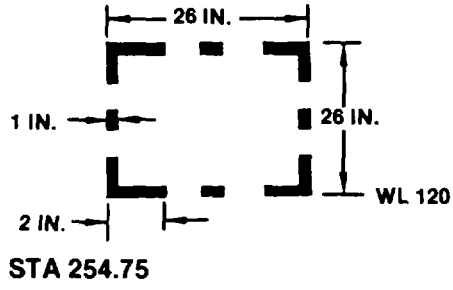
19	Right side of fuselage, centered within emergency rescue markings (code No. 18), 1-in. letters, same color shade as markings.	**CUT HERE FOR** **EMERGENCY EXIT**
20	U-21, paint landing gear struts and wheels olive drab. RU-21, paint lusterless white.	
21	Locate on outboard side of nose wheel strut. Black 1/2-in. letters, arrow 1 in. long, 1/4 in. shaft and 1/2 in. head.	**J** **A** **C** **K** ↓
22	Locate on inside of left and right cowling doors. U-21, yellow 1/2-in. letters. RU-21, lusterless black 1/2-in. letters.	**LUBE OIL** **MIIL-L-23699 ABOVE -25° F** **MIL-L-7808 BELOW - 25°F**

Figure 10-22. Exterior Markings, U-21 and RU-21 (Sheet 8 of 13)

CODE NO.	DIRECTIONS	WORDING
23	U-21 , paint 3 in. red band, from underside of black stripe on left side of fuselage to black stripe on opposite side inline with propeller plane. Locate PROPELLER placard over red band on both sides of fuselage.	3 IN. PROPELLER
23	RU-21, Paint 3 in. lusterless black stripe, centered on propeller plane, Top of stripe starts at upper corner of fuselage, 4 in. down from skin seam to bottom of nose gear doors. Forward edge of black stripe is approximately 18 1/2 in. aft of nose cone.	3 IN. PROPELLER
24	U-21, left and right side of forward fuselage, fore and aft of RED/BLACK stripe (code No. 23). Word DANGER is 13 1/2 in. down from top of stripe and is 1 1/4 in. away from edge of stripe. Black 2-in. letters, arrow points toward stripe and is 4 in. long with 1 in. shaft and 1 1/2 in. arrowhead.	DANGER ←
24	RU-21, left and right side of forward fuselage, fore and aft of BLACK stripe (code No. 23). Word DANGER is 13 1/2 in. down from top of stripe and is 1 1/4 in. away from edge of stripe. Black 2-in. letters, arrow points toward stripe and is 4 in. long with 1 in. shaft and 1 1/2 in. arrow head.	DANGER ←
25	U-21, outboard of left and right engine nacelles on access doors. Black 1/2-in. letters, top of letters toward spar.	PU-545 INVERTER

Figure 10-22. Exterior Markings, U-21 and RU-21 (Sheet 9 of 13)

CODE NO.	DIRECTIONS	WORDING
25	RU-21, outboard of left and right engine needles on access doors. Black lettering, letters towards antenna	PU-545 INVERTER
26	Top of nose section forward of' antiglare paint. Left and right center wing stub forward of spar and inboard of nacelles. Black 1/2 in. letters with arrow. Top of letters towards spar.	LIFT 1/4 IN. 1 IN. 1/2 IN.
27	Top right inboard wing stub On access cover. Black 1/2 in. letters, top of letters toward spar.	BATTERY ACCESS
28	Top of left and right wing center stub, inboard of needles. Right wing 3 places, left wing 4 places, 1/2 in. black letters.	NO STEP
29	Paint a black ground symbol, shade 37038, dimensions per MIL-C-83413/9-2.	
30	DELETE	

Figure 10-22. Exterior Makings, U-21 and RU-21 (Sheet 10 of 13)

CODE NO.	DIRECTIONS	WORDING
31	Left and right wings, inboard of fuel filler caps (code No. 30). Black 1/2-in. letters, top of letters towards spar, 2 places.	**128 Gallons Capacity** **MIL-T-5624(JP-4)** **AVIATION KEROSENE** **CAUTION: NACELLE TANKS MUST BE FULL BEFORE FILLING THIS TANK**
32	Top of each engine nacelle, outboard of fuel filler cap. Black 1/2-in. letters, top of letters facing inboard, 2 places.	**57 Gallons Capacity** **MIL-T-5624(JP-4)** **AVIATION KEROSENE**
33	Antiglare areas. Paint inboard upper 1/4 of the left and right nacelles and nose area forward of cockpit windshield to STA 53.0. Paint black.	
34	U-21, top of right outboard wing panel on access door. Yellow 1/2-in. letters top of letters towards spar. RU-21, lusterless black 1/2-in. letters,	**ACCESS** **CN 405/ASN COMPENSATOR** **T-611/ASN INDUCTION COMPASS** **CAUTION: USE NON-MAGNETIC SCREWS IN COMPASS**
35	U-21, propellers shall not be stripped but will be lightly oversprayed with lusterless black. Do not cover index mark on rear of blade, or serial numbers and data on front of blades. Yellow tip 4-in. wide on front of blade only. For high visibility paint scheme for propellers and spinners, see Chapter 6.	
35	RU-21, propellers shall not be stripped but will be lightly oversprayed with aircraft black. Do not cover index mark on rear of blade, or serial numbers and data on front of blades. Yellow tip 4 in. wide on front of blade only.	
36	Front of nose gear strut. Portect during paint stripping. TOW, 1/2-in. letters, remainder 1/4-in. with arrows and stripes. Paint black.	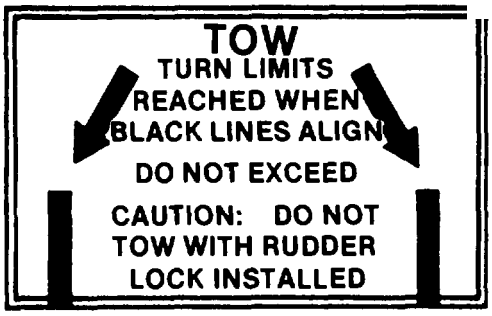

Figure 10-22. Exterior Markings, U-21 and RU-21 (Sheet 11 of 13)

* U . S . GOVERNT PRINTING OFFICE: 1994-555-028/00236

CODE NO.	DIRECTIONS	WORDING
37	U-21, bottom of left and right center wing stub on access door. Yellow 1/2-in. letters, top of letters towards spar.	**REMOVE FOR ACCESS TO ARC-51**
38	Bottom of left and right outboard engine nacelles. Black 1/2-in. letters.	**OIL COOLER DRAIN**
39	U-21, bottom of left and right outboard wing panels. Locate 1 in. forward of power receptacle door. Yellow 1/2-in. letters, top of letters towards spar RU-21, lusterless black 1/2-in. letters.	**(Left Wing)** **A.C. EXTERNAL POWER** **(Right Wing)** **EXTERNAL POWER 24 VOLTS**
40	Bottom of right wing, outboard of engine nacelle and forward of spar. Black 1/2-in. letters, top of letters towards spar.	**SEE OPERATOR'S MANUAL FOR INVERTER OPERATION**
41	Left side of fuselage under model designator (code No. 14) Black 1/4-in. letters. ** Contractor will insert their code.	****WP1-P2-L3 Date** **WP- indicates wash primer used** **P - indicates primer used** **L - indicates lacquer used (if req'd)** **C . indicates coating used (if req'd)**
42	Stencil below Code 41. NOTE: Date shown on stencil is date aircraft painted with MI L-C-46168 paint.	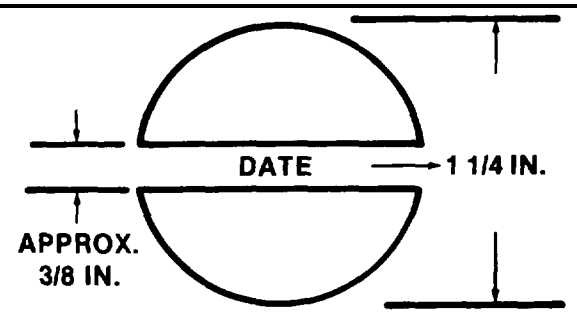
43	U-21, top and bottom of right hand inboard wing aft of battery vent tubes. Paint black.	**Battery Vent**
44	U-21, leading edge of right inboard wing. Paint black.	**PITOT Drain**
45	RU-21, center 1 in. over oxygen access cover. Paint black.	**OXYGEN**

Figure 10-22. Exterior Markings, U-21 and RU-21 (Sheet 12 of 13)

CODE NO.	DIRECTIONS	WORDING
46	RU-21, top right wing, centered aft of engine nacelle, chaff dispensor (see detail A). Paint black.	**WARNING** SAFETY PIN MUST BE IN WHEN MODULE IS REMOVED OR INSTALLED
47	RU-21, top right wing, centered aft of engine nacelle, chaff dispensor (see detail A). Paint black.	**NO FLARES**
48	RU-21, top of right wing behind safety pin receptacle (see detail B). Paint black.	**CHAFF/FLARE SAFETY SWITCH** **INSERT SAFETY PIN BEFORE MODULES ARE REMOVED OR INSTALLED. CAUTION: REMOVE PIN BEFORE FLIGHT.**
49	RU-21, top right wing behind safety pin receptacle (see detail B). Paint black.	**M-130 TEST CONNECTOR**

Figure 10-22. Exterior Markings, U-21 and RU-21 (Sheet 13 of 13)

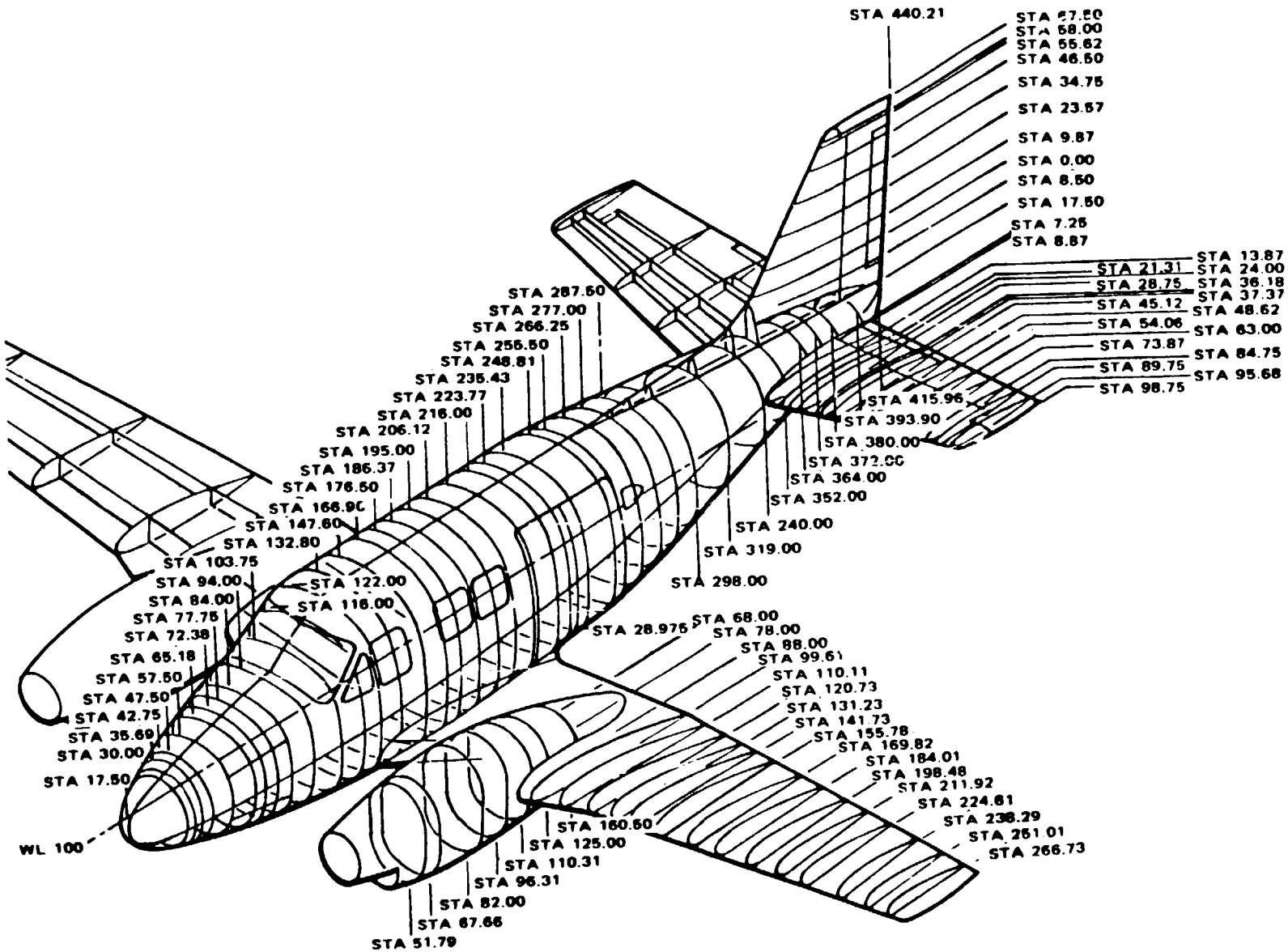

Figure 10-23. Station Diagram, U-21 and RU-21

By Order of the Secretary of the Army:

JOHN A. WICKHAM, JR.
General, United States Army
Chief of Staff

Official:

R. L. DILWORTH
Brigadier General, United States Army
The Adjutant General

DISTRIBUTION:
To be distributed in accordance with DA Form 12-31, AVUM and AVIM Requirements for All Fixed and Rotary Wing Aircraft

*U.S.GOVERNMENT PRINTING OFFICE: 1993 342-421/62103

These are the instructions for sending an electronic 2028

The following format must be used if submitting an electronic 2028. The subject line must be exactly the same and all fields must be included; however only the following fields are mandatory: 1, 3, 4, 5, 6, 7, 8, 9, 10, 13, 15, 16, 17, and 27.

From: “Whomever” <whomever@wherever.army.mil>
To: 2028@redstone.army.mil

Subject: DA Form 2028

1. ***From:*** Joe Smith
2. *Unit:* home
3. ***Address:*** 4300 Park
4. ***City:*** Hometown
5. ***St:*** MO
6. ***Zip:*** 77777
7. ***Date Sent:*** 19−OCT−93
8. ***Pub no:*** 55−2840−229−23
9. ***Pub Title:*** TM
10. ***Publication Date:*** 04−JUL−85
11. *Change Number:* 7
12. *Submitter Rank:* MSG
13. ***Submitter FName:*** Joe
14. *Submitter MName:* T
15. ***Submitter LName:*** Smith
16. ***Submitter Phone:*** 123−123−1234
17. ***Problem:*** **1**
18. *Page:* 2
19. *Paragraph:* 3
20. *Line:* 4
21. *NSN:* 5
22. *Reference:* 6
23. *Figure:* 7
24. *Table:* 8
25. *Item:* 9
26. *Total:* 123
27. ***Text:***

This is the text for the problem below line 27.

RECOMMENDED CHANGES TO PUBLICATIONS AND BLANK FORMS For use of this form, see AR 25–30; the proponent agency is ODISC4.	Use Part II (*reverse)* for Repair Parts and Special Tool Lists (RPSTL) and Supply Catalogs/ Supply Manuals (SC/SM)	DATE 8/30/02

TO: (*Forward to proponent of publication or form)(Include ZIP Code)*	FROM: (*Activity and location)(Include ZIP Code)*
Commander, U.S. Army Aviation and Missile Command ATTN: AMSAM–MMC–MA–NP Redstone Arsenal, AL. 35898	MSG, Jane Q. Doe 1234 Any Street Nowhere Town, AL 34565

PART 1 – ALL PUBLICATIONS (EXCEPT RPSTL AND SC/SM) AND BLANK FORMS

PUBLICATION/FORM NUMBER	DATE	TITLE
TM 9–1005–433–24	16 Sep 2002	Organizational, Direct Support, And General Support Maintenance Manual for Machine Gun, .50 Caliber M3P and M3P Machine Gun Electrical Test Set Used On Avenger Air Defense Weapon System

ITEM NO.	PAGE NO.	PARA–GRAPH	LINE NO. *	FIGURE NO.	TABLE NO.	RECOMMENDED CHANGES AND REASON
1	WP0005 PG 3		2			Test or Corrective Action column should identify a different WP number.

** Reference to line numbers within the paragraph or subparagraph.*

TYPED NAME, GRADE OR TITLE	TELEPHONE EXCHANGE/ AUTOVON, PLUS EXTENSION	SIGNATURE
MSG, Jane Q. Doe, SFC	788–1234	

EXAMPLE

TO: (*Forward direct to addressee listed in publication*)	**FROM:** (*Activity and location*) (*Include ZIP Code*)	**DATE**
Commander, U.S. Army Aviation and Missile Command ATTN: AMSAM–MMC–MA–NP Redstone Arsenal, AL. 35898	MSG, Jane Q. Doe 1234 Any Street Nowhere Town, AL 34565	8/30/02

PART II – REPAIR PARTS AND SPECIAL TOOL LISTS AND SUPPLY CATALOGS/SUPPLY MANUALS

PUBLICATION NUMBER	DATE	TITLE

PAGE NO.	COLM NO.	LINE NO.	NATIONAL STOCK NUMBER	REFERENCE NO.	FIGURE NO.	ITEM NO.	TOTAL NO. OF MAJOR ITEMS SUPPORTED	RECOMMENDED ACTION

PART III – REMARKS (*Any general remarks or recommendations, or suggestions for improvement of publications and blank forms. Additional blank sheets may be used if more space is needed.*)

TYPED NAME, GRADE OR TITLE	TELEPHONE EXCHANGE/AUTOVON, PLUS EXTENSION	SIGNATURE
MSG, Jane Q. Doe, SFC	788–1234	

EXAMPLE

RECOMMENDED CHANGES TO PUBLICATIONS AND BLANK FORMS For use of this form, see AR 25–30; the proponent agency is ODISC4.	Use Part II (*reverse)* for Repair Parts and Special Tool Lists (RPSTL) and Supply Catalogs/ Supply Manuals (SC/SM)	DATE
TO: (*Forward to proponent of publication or form)(Include ZIP Code)* Commander, U.S. Army Aviation and Missile Command ATTN: AMSAM-MMC-MA-NP Redstone Arsenal, AL 35898	FROM: (*Activity and location)(Include ZIP Code)*	

PART 1 – ALL PUBLICATIONS (EXCEPT RPSTL AND SC/SM) AND BLANK FORMS

PUBLICATION/FORM NUMBER	DATE	TITLE
TM 55-1500-345-23	12 June1986	Painting and Marking of Army Aircraft

ITEM NO.	PAGE NO.	PARA–GRAPH	LINE NO. *	FIGURE NO.	TABLE NO.	RECOMMENDED CHANGES AND REASON

** Reference to line numbers within the paragraph or subparagraph.*

TYPED NAME, GRADE OR TITLE	TELEPHONE EXCHANGE/ AUTOVON, PLUS EXTENSION	SIGNATURE

TO: (*Forward direct to addressee listed in publication*)	**FROM:** (*Activity and location*) (*Include ZIP Code*)	**DATE**
Commander, U.S. Army Aviation and Missile Command ATTN: AMSAM-MMC-MA-NP Redstone Arsenal, AL 35898		

PART II – REPAIR PARTS AND SPECIAL TOOL LISTS AND SUPPLY CATALOGS/SUPPLY MANUALS

PUBLICATION NUMBER	DATE	TITLE
TM 55-1500-345-23	12 June 1986	Painting and Marking of Army Aircraft

PAGE NO.	COLM NO.	LINE NO.	NATIONAL STOCK NUMBER	REFERENCE NO.	FIGURE NO.	ITEM NO.	TOTAL NO. OF MAJOR ITEMS SUPPORTED	RECOMMENDED ACTION

PART III – REMARKS (*Any general remarks or recommendations, or suggestions for improvement of publications and blank forms. Additional blank sheets may be used if more space is needed.*)

TYPED NAME, GRADE OR TITLE	TELEPHONE EXCHANGE/AUTOVON, PLUS EXTENSION	SIGNATURE

USAPA V3.01

RECOMMENDED CHANGES TO PUBLICATIONS AND BLANK FORMS For use of this form, see AR 25–30; the proponent agency is ODISC4.	Use Part II (*reverse)* for Repair Parts and Special Tool Lists (RPSTL) and Supply Catalogs/ Supply Manuals (SC/SM)	DATE
TO: (*Forward to proponent of publication or form)(Include ZIP Code)* Commander, U.S. Army Aviation and Missile Command ATTN: AMSAM-MMC-MA-NP Redstone Arsenal, AL 35898	FROM: (*Activity and location)(Include ZIP Code)*	

PART 1 – ALL PUBLICATIONS (EXCEPT RPSTL AND SC/SM) AND BLANK FORMS

PUBLICATION/FORM NUMBER	DATE	TITLE
TM 55-1500-345-23	12 June1986	Painting and Marking of Army Aircraft

ITEM NO.	PAGE NO.	PARA–GRAPH	LINE NO. *	FIGURE NO.	TABLE NO.	RECOMMENDED CHANGES AND REASON

** Reference to line numbers within the paragraph or subparagraph.*

TYPED NAME, GRADE OR TITLE	TELEPHONE EXCHANGE/ AUTOVON, PLUS EXTENSION	SIGNATURE

The Metric System and Equivalents

Linear Measure

1 centimeter = 10 millimeters = .39 inch
1 decimeter = 10 centimeters = 3.94 inches
1 meter = 10 decimeters = 39.37 inches
1 dekameter = 10 meters = 32.8 feet
1 hectometer = 10 dekameters = 328.08 feet
1 kilometer = 10 hectometers = 3,280.8 feet

Weights

1 centigram = 10 milligrams = .15 grain
1 decigram = 10 centigrams = 1.54 grains
1 gram = 10 decigram = .035 ounce
1 decagram = 10 grams = .35 ounce
1 hectogram = 10 decagrams = 3.52 ounces
1 kilogram = 10 hectograms = 2.2 pounds
1 quintal = 100 kilograms = 220.46 pounds
1 metric ton = 10 quintals = 1.1 short tons

Liquid Measure

1 centiliter = 10 milliters = .34 fl. ounce
1 deciliter = 10 centiliters = 3.38 fl. ounces
1 liter = 10 deciliters = 33.81 fl. o unces
1 dekaliter = 10 liters = 2.64 gallons
1 hectoliter = 10 dekaliters = 26.42 gallons
1 kiloliter = 10 hectoliters = 264.18 gallons

Square Measure

1 sq. centimeter = 100 sq. millimeters = .155 sq. inch
1 sq. decimeter = 100 sq. centimeters = 15.5 sq. inches
1 sq. meter (centare) = 100 sq. decimeters = 10.76 sq. feet
1 sq. dekameter (are) = 100 sq. meters = 1,076.4 sq. feet
1 sq. hectometer (hectare) = 100 sq. dekameters = 2.47 acres
1 sq. kilometer = 100 sq. hectometers = .386 sq. mile

Cubic Measure

1 cu. centimeter = 1000 cu. millimeters = .06 cu. inch
1 cu. decimeter = 1000 cu. centimeters = 61.02 cu. inches
1 cu. meter = 1000 cu. decimeters = 35.31 cu. feet

Approximate Conversion Factors

To change	*To*	*Multiply by*	*To change*	*To*	*Multiply by*
inches	centimeters	2.540	ounce-inches	Newton-meters	.007062
feet	meters	.305	centimeters	inches	.394
yards	meters	.914	meters	feet	3.280
miles	kilometers	1.609	meters	yards	1.094
square inches	square centimeters	6.451	kilometers	miles	.621
square feet	square meters	.093	square centimeters	square inches	.155
square yards	square meters	.836	square meters	square feet	10.764
square miles	square kilometers	2.590	square meters	square yards	1.196
acres	square hectometers	.405	square kilometers	square miles	.386
cubic feet	cubic meters	.028	square hectometers	acres	2.471
cubic yards	cubic meters	.765	cubic meters	cubic feet	35.315
fluid ounces	milliliters	29,573	cubic meters	cubic yards	1.308
pints	liters	.473	milliliters	fluid ounces	.034
quarts	liters	.946	liters	pints	2.113
gallons	liters	3.785	liters	quarts	1.057
ounces	grams	28.349	liters	gallons	.264
pounds	kilograms	.454	grams	ounces	.035
short tons	metric tons	.907	kilograms	pounds	2.205
pound-feet	Newton-meters	1.356	metric tons	short tons	1.102
pound-inches	Newton-meters	.11296			

Temperature (Exact)

°F	Fahrenheit temperature	5/9 (after subtracting 32)	Celsius temperature	°C

PIN: 060072-000