TM 43-0001-26-2

TECHNICAL MANUAL

ARMY EQUIPMENT DATA SHEETS

CHEMICAL WEAPONS AND MUNITIONS

This copy is a reprint which includes current pages from Changes 1 through 4.

HEADQUARTERS, DEPARTMENT OF THE ARMY

29 APRIL 1982

WARNING

Do not use these data sheets to operate the equipment. Serious injury to personnel or damage to equipment could result from misuse of this data. Consult your operator's manual to operate this equipment.

FIRST AID

For first aid information, consult FM 21-11.

CHANGE

NO. 5

HEADQUARTERS
DEPARTMENT OF THE ARMY
WASHINGTON, DC, 31 August 2004

ARMY EQUIPMENT DATA SHEETS
CHEMICAL WEAPONS AND MUNITIONS

TM 43-0001-26-2 is changed as follows:

1. Remove old pages and insert new pages as indicated below.

2. New or changed material is indicated by a vertical bar adjacent to the material.

3. New or changed illustrations are indicated by a miniature pointing hand highlighting the change.

Remove Pages	**Insert Pages**
none	A/(B blank)
i and ii	i and ii
none	4-27 and 4-28
Index-1 and Index-2	Index-1 and Index-2

4. File this change sheet in front of the publication for reference purposes.

By Order of the Secretary of the Army:

PETER J. SCHOOMAKER
General, United States Army
Chief of Staff

Official:

JOEL B. HUDSON
Administrative Assistant to the
Secretary of the Army
0423801

Distribution:

To be distributed in accordance with initial distribution number (IDN) 340846 requirements for TM 43-0001-26-2.

CHANGE
NO. 4

HEADQUARTERS
DEPARTMENT OF THE ARMY
WASHINGTON, D C , 7 AUGUST 1991

ARMY EQUIPMENT DATA SHEETS
CHEMICAL WEAPONS AND MUNITIONS

TM 43-0001-26-2,29 April 1982, and changes 1,2 and 3 are changed as follows:

1. The purpose of this change is to update information.

2. New or changed material is indicated by a vertical bar in the margin of the page. Illustration changes are indicated by pointing hand symbols.

3. Remove old pages and insert new pages as indicated below.

Remove Pages	Insert Pages
2-1/(2-2 blank)	2-1/(2-2 blank)
2-3 thru 2-6	None
4-1/(4-2 blank)	4-1/(4-2 blank)
4-5 and 4-6	None
4-6.1 thru 4-6.4	4-6.1 thru 4-6.4
None	4-16.3 and 4-16.4
4-19 thru 4-26	4-19 thru 4-26
5-1/(5-2 blank)	5-1/(5-2 blank)
5-11 and 5-12	None
5-19 thru 5-22	None
7-1/(7-2 blank)	7-1/(7-2 blank)
7-3 and 7-4	None
7-5 thru 7-6	7-5 thru 7-6
A-1/(A-2 blank)	A-1/(A-2 blank)
Index 1 and Index 2	Index 1 and Index 2

4. File this change sheet in front of publication for reference purposes.

By order of the Secretary of the Army:

CARL E. VUONO
General, United States Army
Chief of Staff

Official:

PATRICIA P. HICKERSON
Colonel, United States Army
The Adjutant General

Distribution:

To be distributed in accordance with DA Form 12-34B, requirements for Army Equipment Data Sheets - Chemical Weapons and Munitions.

CHANGE
NO. 3

HEADQUARTERS
DEPARTMENT OF THE ARMY
Washington, DC, 1 October 1988

ARMY EQUIPMENT DATA SHEETS
CHEMICAL WEAPONS AND MUNITIONS

TM 43-0001-26-2,29 April 1982, is changed as follows:

1. New or changed material is indicated by a vertical bar in the margin of the page.

2. Added or revised illustrations are indicated by a vertical bar adjacent to the illustration.

3. Remove old pages and insert new pages as indicated below.

Remove pages	*Insert pages*
2-1 (2-2 blank)	2-1 (2-2 blank)
2-5 and 2-6	None
None	2-10.1 and 2-10.2
4-1 (4-2 blank)	4-1 (4-2 blank)
4-5 and 4-6	None
None	4-6.3 and 4-6.4
None	4-8.1 thru 4-8.6
7-1 (7-2 blank)	7-1(7-2 blank)
None	7-8.1 and 7-8.2
Glossary 1 (Glossary 2 blank)	Glossary 1 (Glossary 2 blank)
None	A-1(A-2 blank)
Index 1 and Index 2	Index 1 and Index 2

4. File this and previous change sheets in back of the publication for reference purposes.

BY ORDER OF THE SECRETARY OF THE ARMY:

CARL E. VUONO
General, United States Army
Chief of Staff

OFFICIAL:

WILLIAM J. MEEHAN II
Brigadier General, United States Army
The Adjutant General

DISTRIBUTION:

To be distributed in accordance with DA Form 12-34B, requirements for Army Equipment Data Sheets - Chemical Weapons and Munitions.

CHANGE
NO. 2

HEADQUARTERS
DEPARTMENT OF THE ARMY
Washington, DC December 30, 1985

ARMY EQUIPMENT DATA SHEETS
CHEMICAL WEAPONS AND MUNITIONS

TM 43-0001-26-2,29 April 1982, is changed as follows:

1. New or changed material is indicated by a vertical bar in the margin of the page.

2. Added or revised illustrations are indicated by a vertical bar adjacent to the illustration.

3. Remove old pages and insert new pages as indicated below.

Remove pages	*Insert pages*
i and ii	i and ii
2-11 and 2-12	2-11 and 2-12
3-19 and 3-20	3-19 and 3-20
4-1 (4-2 blank)	4-1 (4-2 blank)
None	4-6.1 and 4-6.2
4-9 and 4-10	4-9 and 4-10
4-13 and 4-14	4-13 and 4-14
4-14.1 and 4-14.2	4-14.1 and 4-14.2
4-15 and 4-16	4-15 and 4-16
None	4-16.1 and 4-16.2
5-15 and 5-16	5-15 and 5-16
5-17 and 5-18	5-17 and 5-18
7-7 and 7-8	7-7 and 7-8
Glossary 1 (Glossary 2 blank)	Glossary 1 (Glossary 2 blank)
Index 1 and Index 2	Index 1 and Index 2

4. File this and previous change sheet in back of the publication for reference purposes.

By Order of the Secretary of the Army:

JOHN A. WICKHAM, JR.
General, United States Army
Chief of Staff

Official:

R. L. DILWORTH
Brigadier General, United States Army
The Adjutant General

Distribution:

CHANGE NO. 1

HEADQUARTERS
DEPARTMENT OF THE ARMY
WASHINGTON, DC, 18 August 1983

Army Equipment Data Sheets
CHEMICAL WEAPONS AND MUNITIONS

TM 43-0001-26-2, 29 April 1982, is changed as follows:

1. Remove old pages and insert new pages as indicated below. New or changed material is indicated by a vertical bar in the margin of the page.
2. Added or revised illustrations are indicated by a vertical bar adjacent to the illustration.

Remove pages	*Insert pages*
3-13 and 3-14	3-13 and 3-14
4-1(4-2 blank)	4-1(4-2 blank)
4-5 and 4-6	4-5 and 4-6
4-13 and 4-14	4-13 and 4-14
None	4-14.1 and 4-14.2
Glossary 1(Glossary 2 blank)	Glossary 1(Glossary 2 blank)
Index 1 and Index 2	Index 1 and Index 2
Sample DA Form 2028-2	Sample DA Form 2028-2

3. File this change sheet in front of the publication for reference purposes.

By Order of the Secretary of the Army:

JOHN A. WICKHAM, JR.
General, United States Army
Chief of Staff

Official:

ROBERT M. JOYCE
Major General, United States Army
The Adjutant General

Distribution:

To redistributed in accordance with DA Form 12-28, Section I, requirements for General Information applicable to all Organizations which have a Chemical Mission.

INSERT LATEST UPDATED PAGES. DESTROY SUPERSEDED DATA.

LIST OF EFFECTIVE PAGES

NOTE: The portion of text affected by the updates is indicated by a vertical line in the outer margins of the page. Updates to illustrations are indicated by miniature pointing hands. Updates to wiring diagrams are indicated by shaded areas.

Dates of issue for original and updated pages are:

Original.... 0 .... 29 April 1982

Change..... 1 .... 18 August 1983

Change..... 2 .... 30 December 1985

Change..... 3 .... 1 October 1988

Change..... 4 .... 7 August 1991

Change..... 5 .... 31 August 2004

TOTAL NUMBER OF PAGES IS 128 CONSISTING OF THE FOLLOWING:

Page No.	*Change No.	Page No.	*Change No.	Page No.	*Change No.
Cover and warning page	0	4-3 and 4-4	0	4-27 and 4-28	5
Change page 5	5	4-6.1 thru 4-6.4	4	5-1(5-2 blank)	4
Change page 4	4	4-7 and 4-8	0	5-3 thru 5-14	0
Change page 3	3	4-8.1 thru 4-8.6	3	5-15 thru 5-17	2
Change page 2	2	4-9	0	5-18 thru 5-24	0
Change page 1	1	4-10	2	6-1(6-2) thru 6-4	0
A/(B blank)	5	4-11 and 4-12	0	7-1(7-2 blank)	4
i	5	4-13	1	7-5	0
ii	5	4-14	2	7-6	4
1-1(1-2 blank) thru 1-8	0	4-14.1	1	7-7 and 7-8	0
2-1(2-2 blank)	4	4-14.2	2	7-8.1 and 7-8.2	3
2-9 thru 2-10	0	4-15	2	7-9 and 7-10	0
2-10.1 and 2-10.2	3	4-16	0	Glossary 1(Glossary 2 blank)	3
2-11	0	4-16.1 and 4-16.2	2	A-1(A-2 blank)	4
2-12	2	4-16.3 and 4-16.4	4	Index 1	4
3-1(3-2 blank) thru 3-12	0	4-17 thru 4-19	0	Index 2	5
3-13 and 3-14	1	4-20	4	Authentication	0
3-15 thru 3-18	0	4-21	0	DA 2028-2 (sample)	1
3-19 and 3-20	2	4-22	4	DA 2028-2	0
4-1(4-2 blank)	4	4-23	0	Metric Equivalents	0
		4-24 and 4-25	4	Back cover	0
		4-26	0		

*Zero in this column indicates an original page or work package.

Change No. 5

TECHNICAL MANUAL

NO. 43-0001-26-2

HEADQUARTERS
DEPARTMENT OF THE ARMY
Washington, DC, 29 April 1982

ARMY EQUIPMENT DATA SHEETS

CHEMICAL WEAPONS AND MUNITIONS

NOTE: This manual imprinted in two volumes, as follows:

TM 43-0001-26-1, CHEMICAL DEFENSE EQUIPMENT
TM 43-0001-26-2, CHEMICAL WEAPONS AND MUNITIONS

REPORTING ERRORS AND RECOMMENDING IMPROVEMENTS

You can help improve this manual. If you find any mistakes or if you know of a way to improve the procedures, please let us know. Mail your letter, DA Form 2028 (Recommended Changes to Publications and Blank Forms), or DA Form 2028-2, located in the back of the manual direct to: Commander, U.S. Army Tank-Automotive & Armament Command, ATTN: AMSTA-LC-CECT. 15 Kansas Street, Natick, MA 01760 You may also send in your recommended changes via electronic mail directly to amssbriml@natick.army.mil. A reply will be furnished to you.

TABLE OF CONTENTS

TM 43-0001-26-2

		Page
Introduction		ii
CHAPTER	1. Bombs and Clusters	1-1
	2. Flame	2-1
	3. Riot Control	3-1
	4. Smoke	4-1
	5. Servicing	5-1
	6. Maintenance and Repair	6-1
	7. Training	7-1
GLOSSARY		Glossary 1
INDEX		Index-1

* This manual, together with TM 43-0001-26-1, supersedes TM 750-5-15, 2 Aug 72, and all changes.

INTRODUCTION

1-1. Purpose. This manual is a reference handbook published as an aid in training, familiarization and identification of chemical weapons and munitions. This manual is not authorization for requisition, stockage, maintenance, or issue of the material described herein.

1-2. Federal Supply Classes Included. Data sheets for chemical weapons in federal supply classes 1010, 1040, and 1050 and for related support equipment are included in this manual. For chemical ammunition items, only data sheets for items in federal supply classes 1325, Bombs and Clusters, and 1365, Chemical Agents, are included in this manual. Data sheets for chemical ammunition items in other federal supply classes (FSC) will be included in the following manuals:

a. TM 43-0001-28, Artillery and Mortar Ammunition and Fuzes (FSC 1310, 1315, 1320, and 1390).

b. TM 43-0001-29, Grenades (FSC 1330)

c. TM 43-0001-30, Rockets (FSC 1340)

d. TM 43-0001-36, Land Mines (FSC 1345)

e. TM 43-0001-37, Pyrotechnics (FSC 1370)

f. TM 43-0001-38, Demolition Materiel (FSC 1375)

CHAPTER 1
BOMBS AND CLUSTERS

Page
Canister Cluster, Riot Control Agent: Tactical CS, 50-Pound, M158 1-3
Cluster, Bomb: Incapacitating, BZ,750-Pound, M43 1-5
Cluster, Generator: Incapacitating, BZ,175-Pound, M44 1-7

CANISTER CLUSTER, RIOT CONTROL AGENT: TACTICAL CS, 50-POUND, M158

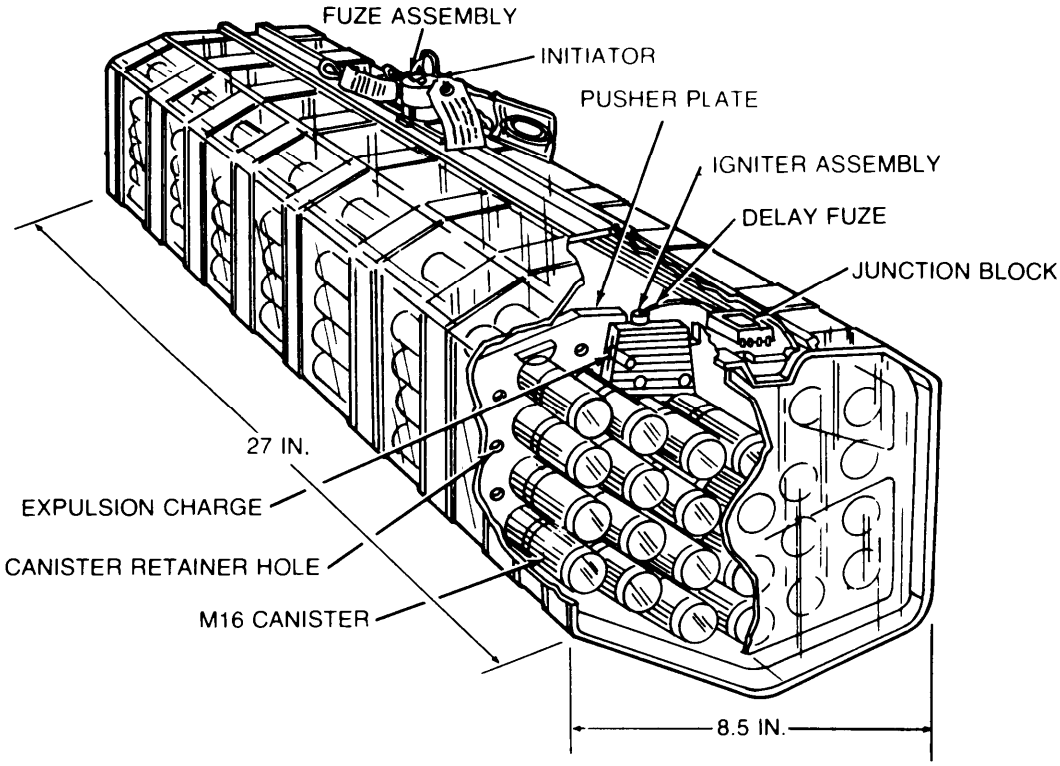

Type Classification:

STD (LCC-B); AMCTC 846871

Use:

For aerial scatter-delivery of M16 CS canisters on selected targets to harass and force hostile personnel from cover. The CS causes tears in the eyes and irritates the skin of exposed personnel. The CS may also cause temporary chest pains and nausea.

Description:

The M158 50-pound CS canister cluster consists of eight plastic modules that are heat-sealed together, a fuze bar assembly, a fuze assembly, and an initiator. Each module contains 33 M16 CS canisters. The M16 canister consists of an aluminum canister, a CS pyrotechnic mixture, and a fuze assembly.

Functioning:

A large snap hook on the end of the initiator arming wire is snapped to a permanent fitting in the cargo space of the aircraft. The canister cluster is then pushed out of the aircraft. As the cluster falls from the aircraft, the initiator arming wire is withdrawn from the initiator and the timer mechanism is activated. The timer functions about 600 feet above the ground. There, the initiator sets off two primers which ignite pyrotechnic delay fuzes leading to two junction boxes. Igniter mix in the boxes ignites four delay fuzes leading to an igniter assembly in each module. The igniter assembly detonates an expulsion charge that ignites the M16 canisters. The detonation pushes a pusher plate forward expelling them from the cluster. The end M16 canisters are ignited first and the sequence is repeated at half-second intervals until all canisters are ignited and expelled from the eight modules. The rapid burning of the ignition composition ignites the CS mixture, propelling and dispersing the canisters in an erratic path along the ground and in the air. CS particles are released into the air during the burning period and may cover about 10,000 square meters.

Tabulated Data:

NSN 1325-00-930-5866
Unit of issue . . . . Each
Weight . . . . . 48 lb
Length . . . .27 in.
Height . . . .12.5 in.
Width . . . .8.5 in.
Number of M16 CS canisters 264
Method of actuation . . . . . Initiator-timer-primer

Performance:

Ignition . . . .2.4 seconds after primer activation

Sequence . . . . 0.5 second intervals

Shipping and Storage Data:

Packing . . . . Packaged in a fiberboard box, sealed in a moisture-proof bag, and then packed in a cushion-lined plywood box, four boxes/pallet

Weight . . . . . 92 lb/box

Cube . . . .6.4 cu ft/box

Quantity-distance class . . . . (12)1.2

Storage comparability group . . . .G

Chemical storage group . . . .B

DOT hazard classification . . . . . Irritating material

DOT shipping name . . . . Tear gas grenade (Device)

DOT label . . . .Irritant NOS

UNO serial number 031

DODAC 1325-F497

Drawing number , ... DL 14-23-1867

References:

TM 3-1325-232-12

TM 9-1300-206

CLUSTER, BOMB: INCAPACITATING, BZ, 750-POUND, M43

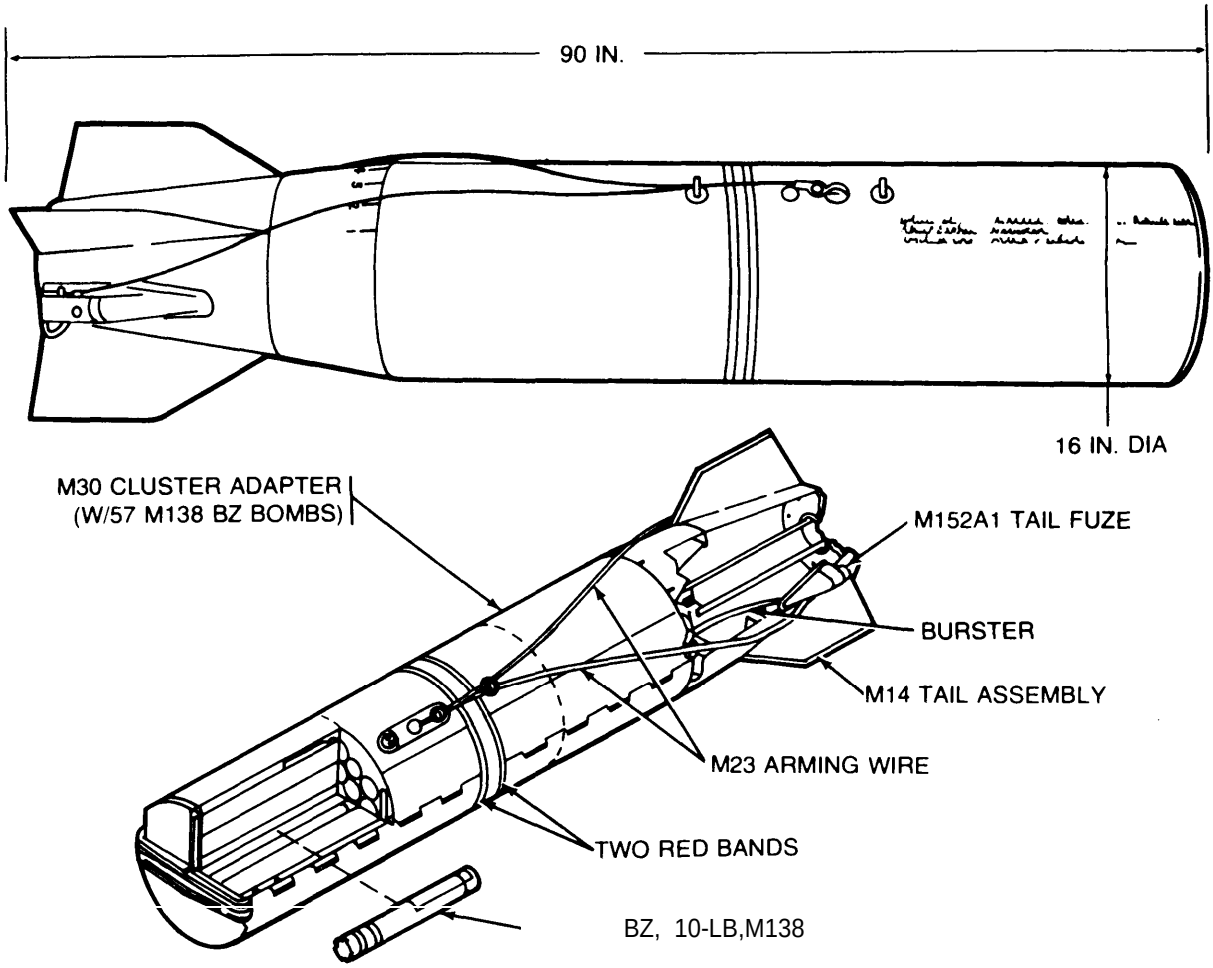

Type Classification:
STD (LCC-B); CCTC 3978 62

Use:
For aerial delivery of 57 M138 10-pound BZ incapacitating agent bombs on selected targets to temporarily incapacitate enemy personnel. Inhaling BZ causes temporary slowing of mental and physical activity, disorientation, and hallucinations among exposed personnel.

Description:
The M43 bomb cluster consists of 57 M138 10-pound BZ incapacitating agent bombs clustered in an M30 bomb cluster adapter, an M14 bomb fin assembly, two M152A1 or M908 tail fin fuzes, and an M23 arming wire assembly. Nineteen M138 bombs are clustered in each of three longitudinal compartments inside the casing of the M30 cluster adapter. A burster consisting of 22 feet of detonating cord is threaded through the hinge tube of the cluster assembly. TheM13810-pound BZ bomb is a thermal-generation munition consisting of four canisters nested in a tubular steel bomb casing. Each canister is filled with a pyrotechnic BZ mixture. An M150A2 fuze, a direct arming pin type fuze, is screwed into one end of each bomb. Spacers between the M30 adapter compartments hold the arming pin in the depressed position.

Functioning:
When the M43 cluster is released from the aircraft, the M23 arming wire is withdrawn, and the arming vanes of the M152A1 fuzes rotate in the airstream arming the fuzes. After the preset time, one or both fuzes function and detonate the burster, which breaks the straps holding the cluster together. When the cluster opens, the 57 M138 bombs fall individually to the target. The M150A2 fuzes become armed as soon as the M138 bombs sepa-

rate from the spacers in the M30 adapter. When the M138 bomb strikes the target, the fuze is initiated and ignites the BZ pyrotechnic mixture in the canisters. Particles of BZ incapacitating agent are released into the air.

Tabulated Data:

NSN:

Complete 1325-00-857-0611

W/out fuze, fin, and wire 1325-00-857-0224

Unit of issue . . . . .Each

Weight . . . . 800 lb

Length . . . .90 in.

Diameter of body . . . . 16 in.

Components:

Adapter, bomb cluster . . . . M30 (DODAC 1325-F343) w/57 M138 10-lb BZ bombs

Fin assembly, bomb . . . . . M14 (DODAC 1325-F630)

Fuze, bomb, tail . . . . . M152A1 or M909 (DODAC 1325-G101)

Arming wire assembly . . . . . M23 (DODAC 1325-F440)

Performance:

Fuze . . . . Armed in airstream

Detonation of burster . . . . . Preset mechanical time fuze

Detonation of M138 bomb . . . . . Impact fuze

Shipping and Storage Data:

Packing . . . .Packed in shipping guard with 2 end caps and 8 wooden ribs with steel bands. Fuzes, fin, and wire shipped separately.

Weight packed . . . .92 lb(w/o fuzes, fin, and wire)

Cube . . . . 6.4 CU ft (w/o fuzes, fin, and wire)

Quantity-distance class . . . . (12)1.2

Storage comparability group . . . .K

Chemical storage group . . . .B

DOT hazard classification . . . . Poison Class B

DOT shipping name . . . . Poison Solid, NOS

UNO serial number 0021

DODAC 1325-E416

Drawing number . . . . DL 14-23-1467

References:

FM 3-20

SC 1305/30-IL

TM 3-250

TM 9-1300-206

TM 9-1325-200

CLUSTER GENERATION: INCAPACITATING, BZ, 175-POUND, M44

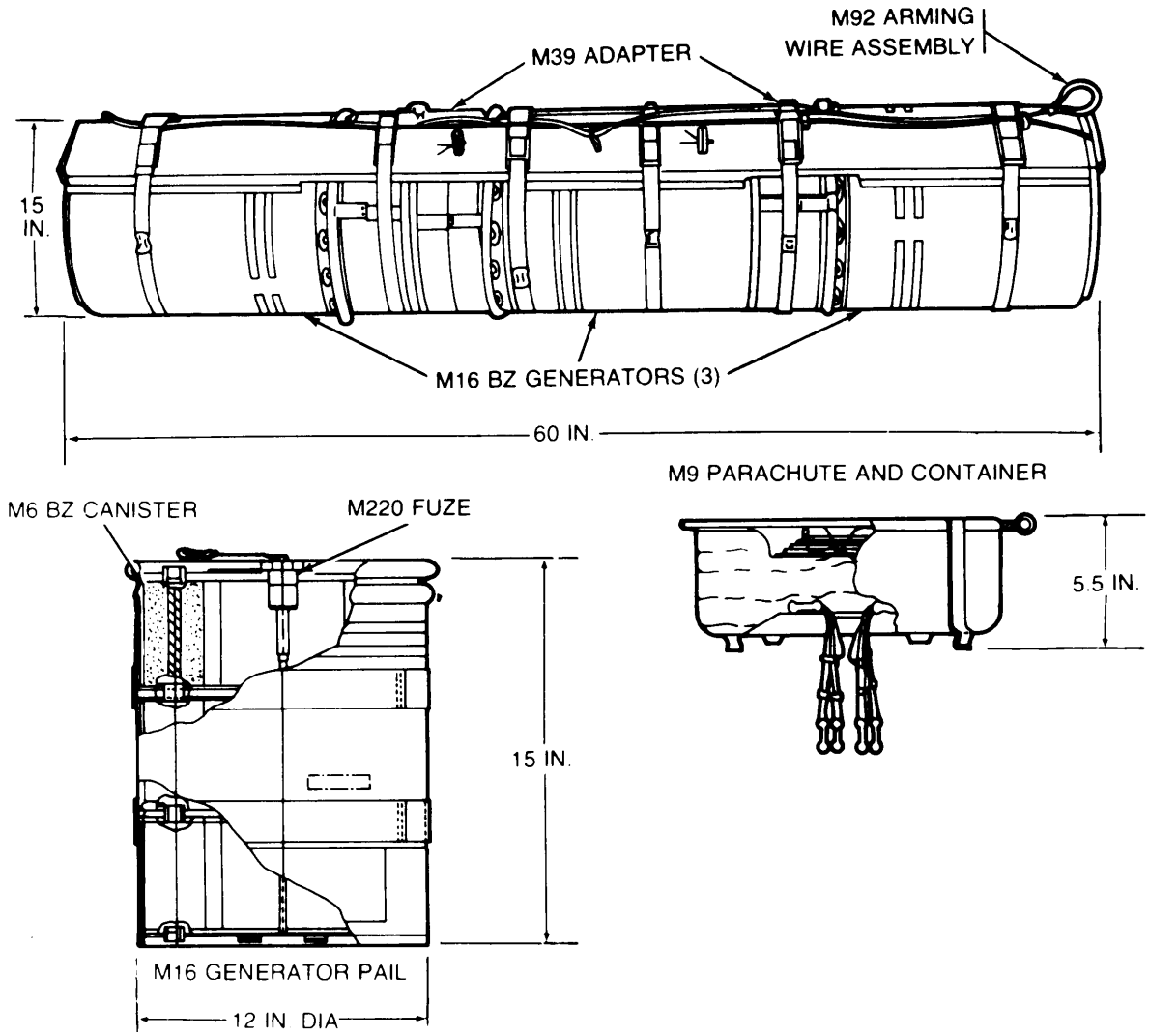

Type Classification:

STD (LCC-B); CCTC 3978 62

Use:

For aerial delivery of M16 50-pound incapacitating BZ generators on selected targets to temporarily incapacitate enemy personnel. Inhaling BZ causes temporary slowing of mental and physical activity, disorientation, and hallucinations among exposed personnel.

Description:

The M44 175-pound BZ generator cluster consists of an M39 generator cluster adapter, three M1650-pound BZ incapacitating generators, and an M92 arming wire assembly. The M39 adapter consists of two suspension bars, buckles, and steel strapping to hold the M16 generators. The M16 BZ generator consists of an M16 BZ generator pail and an M9 parachute and container assembly secured to the pail by the arming wire. The M9 assembly consists of a glide parachute stowed in a spring-loaded metal container and two harness assemblies. The M16 BZ generator pail includes 42 M6 BZ incapacitating canisters packaged in a pail fuzed with an M220 fuze. The M6 canister is filled with BZ pyrotechnic mixture with a cylindrical hole coated with starter mixture. The M9 arming wire assembly is a two-branch swivel-type arming wire with a 10-inch extension cable.

Functioning:

When the M44 generator cluster is released from the wing racks of an aircraft, the M92 arming wire (with

extension cable if required) is retained by the fixture on the wing rack causing the branches of the arming wire to pull out of buckles on the cluster adapters. The steel strapping separates and M16 generators fall from the cluster. As the generators fall, the arming wire on each generator pulls free and the parachute separates from the generator. As the parachute opens, the cover of the M220 fuze is pulled from the fuze body permitting the striker pin to strike the primer and igniting the first fire and delay pellets in the delay housing. The delay elements burn for 10 to 14 seconds. The generator is activated by ignition mixtures igniting igniter pads. The starter mixes and the BZ pyrotechnic mixes in the M6 canisters are then ignited. Particles of BZ incapacitating agent are released into the air from ports in the generator. The M44 cluster may also be disassembled and each Ml 6 generator dropped as a single munition. The Ml 6 generator can also be used singly as a ground-emplaced munition by removing the M9 parachute and container assembly.

Tabulated Data:

NSN 1325-00-857-0610
Line item number E42734
Unit of issue . . . . Each
Length . . . .60 in.
Width . . . . . 15 in.
Height . . . .15 in.
Weight . . . .175 lb
Generator model: M16 (3/cluster)
Height . . . .15 in.
Diameter . . . .12 in.
Weight . . . .50 lb
Parachute and container . . . . . M9 (1/M16 generator)
Canister . . . . . M6 (42/M16 generator
Arming-wire assembly M92 (1/cluster)
Cluster adapter (generator) M39 (1/cluster)

Performance:

Cluster release . . . . . Arming wire
Delay . . . .12.5 seconds

Shipping and Storage Data:

Packing . . . . Packed complete on a wooden skid enclosed in plywood
Weight packed . . . .250 lb
Cube . . . .11 tuft
Quantity-distance class . . . . (12)1.2
Storage comparability group . . . .K
Chemical storage group..... . . . . ..B
DOT hazard classification . . . . . Poison Class B
DOT shipping name . . . . Poison Solid. NOS
DODAC . . . . . .Not assigned
Drawing number . . . . LM 31-21-11

References:

FM 3-20
SC 1305/30-IL
TM 3-250
TM 9-1300-206
TM 9-1325-200

CHAPTER 2
FLAME

Page
Flame Thrower, Mechanized, Main Armament: APC-Mounted, M10-8 (Deleted). 2-3
Flame Thrower, Portable: M2A1 -7 (Deleted) 2-5
Flame Thrower, Portable: M9-7 and M9A1-7 (Deleted) 2-7
Launcher, Rocket: 66-Millimeter, A-Tube, M202 and M202A1 2-9
Projectile, 155 Millimeter: GB2, M687 . . . . . 2-10.1
Thickening Compound, Flame Fuel:M4 2-11

LAUNCHER, ROCKET: 66-MILLIMETER, 4-TUBE, M202 and M202A1

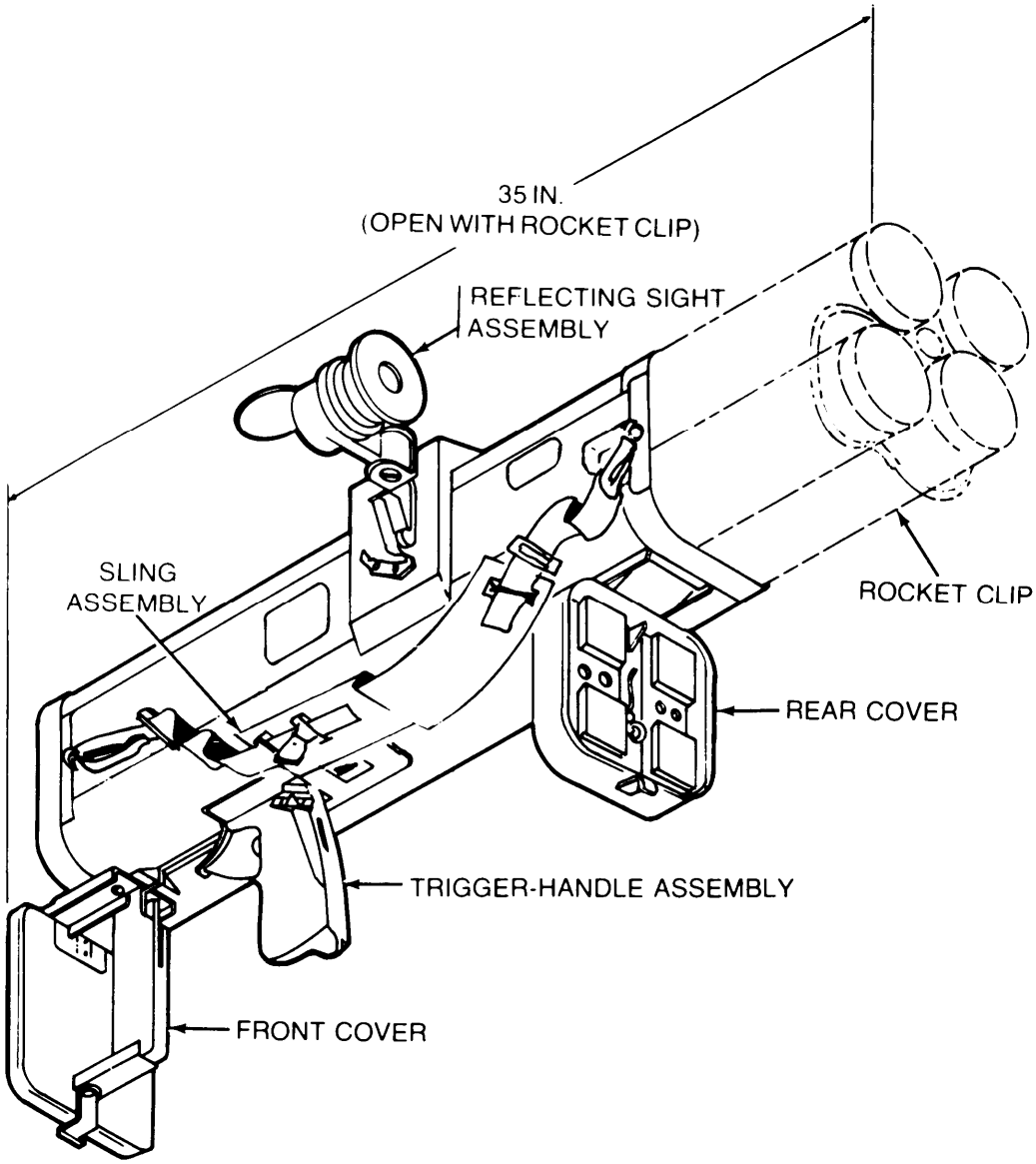

Type Classification:

M202A1 STD (LCC-A); AMCTC 9018 72
M202 STD (LCC-B); AMCTC 9018 72

Use:

To launch 66-millimeter M74 incendiary rockets against enemy gun emplacements, fortified positions, and unarmored vehicles. It is also used for fighting in streets and villages.

Description:

The M202 and M202A1 launchers are lightweight, shoulder-fired, semiautomatic weapons that launch 66-millimeter rocket clip ammunition. Each launcher has four fiberglass launch tubes into which a rocket clip with four rockets slip-fits. The tubes are secured to front and rear bulkheads and are inclosed by shroud strips. Hinged front and rear covers protect the tube openings. A retractable trigger-handle assembly and a folding sight provide compact carrying and storage capabilities. An adjustable sling is used to carry the launcher over the shoulder.

Difference Between Models:

The firing pin assembly of the M202A1 launcher has been modified to eliminate hangup of the firing pin.

Functioning:

The launcher is loaded by placing the closed front cover on the ground, opening the rear cover, inserting the clip so as to engage the firing mechanism, and closing and latching the rear cover. The launcher can be fired from the prone, sitting, kneeling, or standing position. After the trigger safety is released, each complete trigger pull cocks and releases one firing pin. The pin strikes a rocket motor primer which ignites the rocket motor. The motor provides the thrust to launch the rocket from the launcher.

Tabulated Data:

NSN:
- M202A1 1055-00-021-3909
- M202 1055-00-143-6966

Line item number L45250
Unit of issue . . . . Each
Basis of issue . . . . AR 310-34; (MTOE/TOE/TDA)

Weights:
- Rocket launcher empty . . . .11.5 lb
- Rocket launcher with rocket clip . . . .26.6 lb

Lengths:
- Rocket launcher, closed . . . .27 in.
- Rocket launcher with rocket clip . . . .35 in.

M74 rocket clip:
- Type warhead . . . .Incendiary. TPA
- DODAC 1340-H110

Performance (Launcher with Rocket Clip):

Rate of fire . . . . . One round per sec
Muzzle velocity . . . .375 ft per sec
Arming distance . . . .5.5 to 13 meters
Range, minimum safe . . . .20 meters
Range, effective (point targets) . . . .200 meters
Range, maximum (area targets) . . . .750 meters
Bursting radius (incendiary warhead) . . . .20 meters

Shipping and Storage Data:

Packing . . . . 1/wooden box
Weight packed . . . .40 lb
Cube packed . . . .3.2 cu ft
Drawing number 147-1-100

References:

FM 20-33
TC 23-2
TM 3-1055-218-12
TM 3-1055-456-12

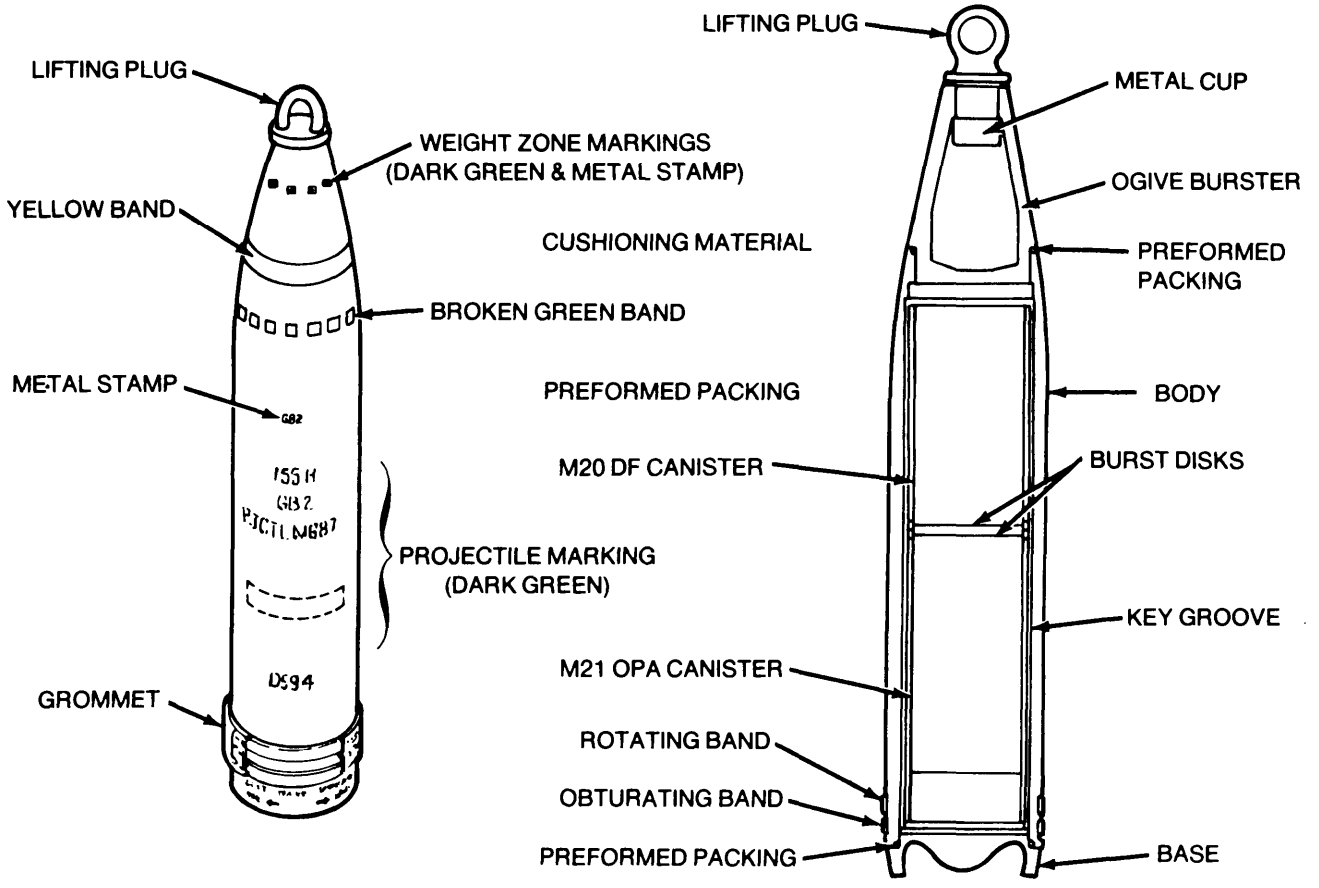

Type Classification:

STD (LCC-A)01776009

Use:

The M687 projectile can be delivered by the M185 cannon on the M109A2 or M109A3 Howitzer, or the M1A2 Cannon on the M114A2 Howitzer. The M20 DF (methylphosphonic defluoride) canisters are shipped and stored separately for safety reasons. The M687 projectile when received contains the M21 OPA (isopropyl alcohol/isopropyl Amine) and is shipped and stored inside the M87 projectile cavity. When the M687 projectile is prepared for firing by the unit, the projectile is disassembled and the M21 OPA removed. The M20 DF is installed in front per instructions, followed by burst disk. Then the M21 OPA is reinstalled and secured with the rear base reinstalled and secured. The point detonating fuzes, M557 or M739/M739A1, are authorized for use with the M687 projectile.

Functioning:

Upon firing the M687 projectile from the cannon, the firing causes the burst disks fitted between the M20 DF and M21 OPA canisters to the facing ends to rupture due to the setback force. The ruptured canisters leak the chemical contents into the M687 projectile cavity. The chemical reaction from the two chemicals produce the lethal agent. The fuze used will start the chain reaction of exploding the M687 projectile, which releases the lethal agent into the atmosphere.

Tabulated Data:
NSN 1320-00-431-6249 D594
Line item number P71856
Uni tof issue . . . .EA
Basis of issue . . . . . .
Nomenclature: . . . . . Projectile, 155 millimeter,GB2
Model number M687
DODAC 1320-D594
Projectile(as fired):
Length . . . . . 35.5 in. (90.17 cm)
Weight . . . .93 lb (kg)
Canisters:
Diameter (M20/M21) . . . . . 5 in. (12.70 cm)
Length:
M20DF(methylphosphonic difluoride) . . . .7.82 in. (19.87 cm)
M21 OPA (isopropyl alcohol/ isopropyl Amine) . . . . . 13.87 in. (35.23 cm)
Weight:
M20 DF . . . . . .10.1 lb (4.59 kg)
M21 OPA . . . . . 14.5 lb (6.58 kg)
Explosive weight (Comp “B”/oxamide)... . . . .2.27 lb (1.03 kg)

Temperature Limits:
Storage:
Lower limit . . . . . −60°F(−51°C)
Upper limit . . . . . +145°F(62.8°C)

Storage/Transpotiation (interim):
M687 Projectile with M21 OPA Canister:
DOD hazard class 1.1
Storage compatibility L
DOT class . . . . . Class A Explosive
DOT marking . . . . Explosive Projectile
DOT label . . . . . Explosive A
ID number UN0020
M20 DF Canister:
DOT class . . . . Corrosive Material
DOT marking. . . . . .. Corrosive Liquid Nos (Methylphosphonic Difluoride)
DOT label . . . . Corrosive
ID number UN1760

Shipping and Storage Data:
SeeTM 9-1300-206

References:
TM 3-1320-242-10
TM 9-1300-206
TM 43-0001-28

THICKING COMPOUND, FLAME FUEL: M4

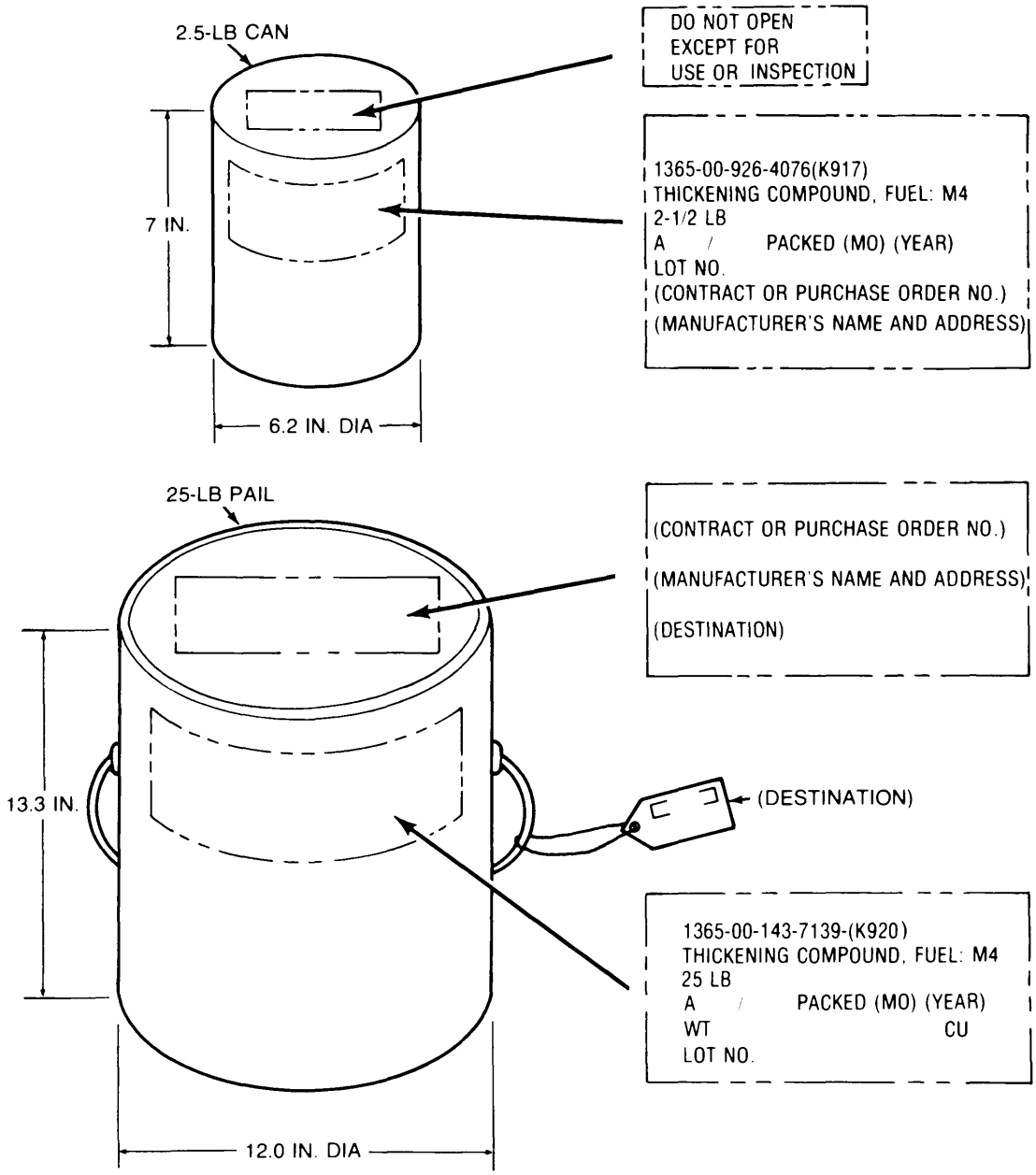

Type Classification:

STD (LCC-A); AMCTC 844071

Use:

To convert gasoline or oil to a gel for use as an incendiary fuel in fire bombs, flame throwers, and flame field expedients. The thickened flame fuel is used to kill, dislodge, and demoralize personnel; to neutralize fortifications; and to destroy flammable material.

Description:

M4 thickening compound is issued in 2 1/2-pound cans and 25-pound pails for Army use. Although these items are controlled as ammunition, the thickening compound is a nonflammable, inert material. It is a fine, white soapy powder that is a byproduct of petroleum. The compound is an intimate mixture of di-acid aluminum soap of iso-octanoic acid and about two percent antiagglomerate, which prevents clumping.

Functioning:

To make thickened flame fuel, M4 thickening compound is mixed with standard-grade gasoline (or oil). This flame fuel, a thick, jellylike substance, ranges in consistency from a pourable liquid to a rubbery, very thick gel. Before aging, it looks somewhat like applesauce. Aged flame fuel is a translucent gel. In cold weather, warming or a peptizer is needed to obtain a gel. It is highly flammable; however, it is less easily ignited when either cold or very thick. The consistency of flame fuel depends upon the amount of thickener added to a specific amount of gasoline. There are three designations of flame fuel: portable flame thrower fuel, mechanized flame thrower fuel, and flame field expedient fuel. All three are prepared from the same materials and in a similar manner, but contain increasing amounts of thickener for the same amount of gasoline. When used in flame throwers, the gels form flame rods having greater range and better aiming characteristics than unthickened fuels. The gels have longer burning times on target than unthickened fuels.

Tabulated Data:

NSN:
- *2* 1/2-lb can 1365-00-926-4076
- 25-lb pail 1365-00-143-7139

Unit of issue . . . . Pound
Basis of issue . . . . TAAMS
Peptizer:
- Type . . . .2-ethyl-hexanoic acid
- NSN 6810-00-965-2310
- Unit of issue . . . . . 1 gal can
- Basis of issue ... . CTA 50-970

Performance:

Mixing time . . . .5 to 10 minutes
Aging period . . . .6 t0 8 hours

Shipping and Storage Data:

2 1/2-lb can:
- Packing . . . .16 cans/wooden box
- Weight packed . . . .50 lb
- Cube packed . . . .1.8 cu ft
- DODAC 1365-K917
- Drawing number D18-60-1285
- Military specification MIL-T-50009A

25-lb pail:
- Packing . . . .5 gal steel pail
- Weight packed . . . .26 lb
- Cube packed . . . .1.2 cu ft
- DODAC. ., ...1365-K920
- Drawing number . . . .18-74-467 (Rev)
- Military specification ., ... MIL-T-50009A

DOT shipping name . . . . . Soap, NO1BN

References:

FM 20-33
SC 1340/98-IL
TM 3-1040-204-14
TM 3-1040-209-12
TM 3-1040-211-12
TM 3-1040-219-12
TM 3-1040-221-12
TM 3-1040-256-12
TM 3-1040-257-14
TM 3-366

CHAPTER 3
RIOT CONTROL

Page
Disperser and Riot Control Agent, Manually Carried: CR, M36 and Carrier 3-3
Disperser and Riot Control Agent, Manually Carried: CSX, M32 and Carrier 3-5
Disperser, Riot Control Agent, Heliwpter or Vehicle-Mounted:M5 3-7
Disperser, Riot Control Agent, Portable:M33 and M33A1 3-9
Disperser, Riot Control Agent, Portable: M3 3-11
Launcher, Projectile, 64 Millimeter: Riot Control, M234 3-13
Riot Control Agent: CR Solution 3-15
Riot Control Agent: CS1 3-17
Riot Control Agent: CS2 3-19

DISPERSER AND RIOT CONTROL AGENT, MANUALLY CARRIED: CR, M36 AND CARRIER

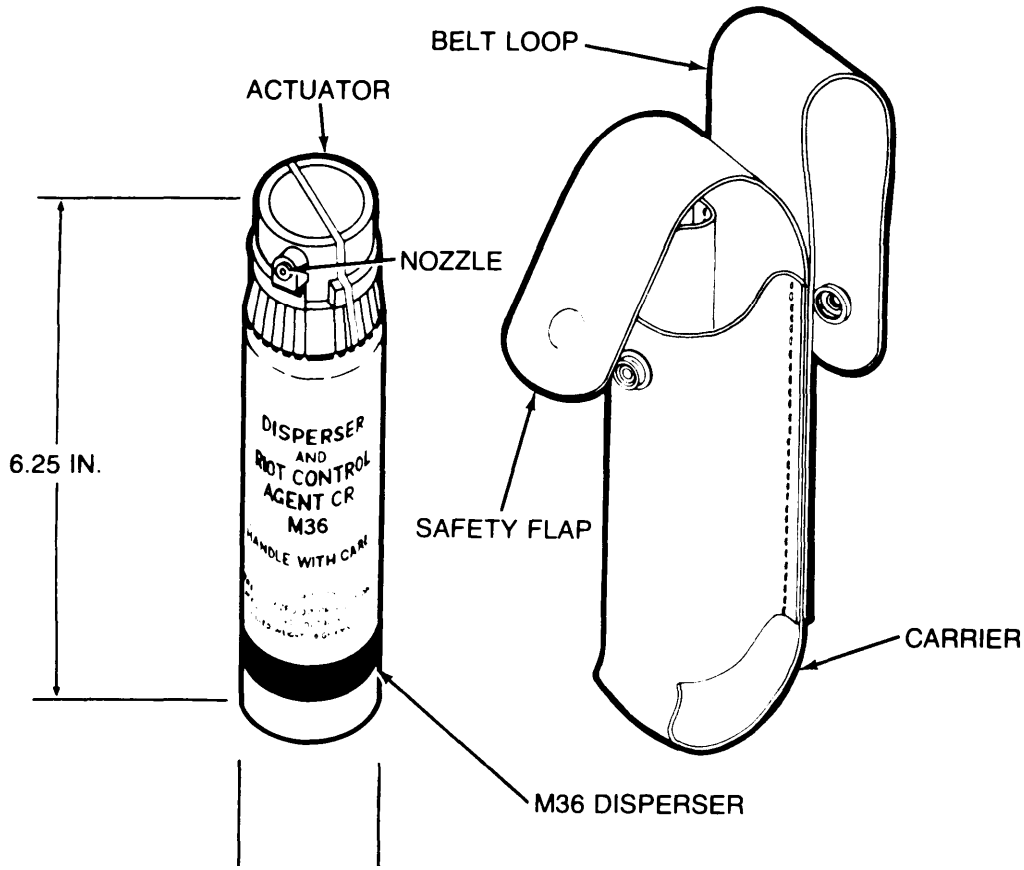

Type Classification:
STD (LCC-A); MSR 11746023

Use:
To apprehend, control, or subdue unruly persons, trespassers, and rioters by spraying them with CR riot control agent solution from a handheld pressurized can. The spray stings and irritates the eyes, skin, nose, throat, and lungs of exposed personnel.

Description:
The M36 disperser is a handheld, lightweight cylindrical device which dispenses a stream of Riot Control Agent, CR Solution, under pressure. The M36 disperser consists of an aluminum container with a locking actuator. A tamper-proof seal is located over the top of the actuator. Item identification and warning markings are painted on the container. The container is filled with a solution of CR riot control agent pressurized with nitrogen gas. When the M36 disperser is not in use, it is stowed in a carrier. This carrier is a separately issued leather case with an easily accessible safety flap and belt loop, which are secured by snap fasteners to prevent accidental release.

Functioning:
The M36 disperser is armed and the CR solution dispensed by rotating the actuator counterclockwise, which breaks the seal, and pressing down on the actuator with the index finger. Pressing on the actuator allows the pressurized CR solution to discharge through the nozzle in a jet stream for a range of about 12 feet, By maintaining finger pressure on the actuator, the operator can dispense the CR solution in a continuous stream lasting 14 to 24 seconds. By alternately releasing or increasing pressure on the actuator, the operator can also apply 15 to 25 bursts lasting about 1 second each.

Tabulated Data: Except as noted, all data applies to the M36 disperser.

NSN:
- M36 disperser 1365-00-283-9046
- Carrier 1365-00-179-4248

Unit of issue . . . .Each
Basis ofissue . . . . CTA 23-101
Weight . . . .110 grams
Diameter . . . .1.5 in.
Length . . . .6 in.
Filling . . . .68.3 grams of CR solution

Performance:
Pressure . . . . . .140 psig at 75°F
Range . . . .10 to 12ft
Operating time:
- Continuous stream . . . .$_1$14 t0 24 sec
- Short (1 sec) bursts . . . .15 to 25 bursts

Shipping and Storage Data:
M36 disperser:
- Packing . . . . in vapor-proof bags, 144/wooden box
- Weight . . . .45 lb
- Cube . . . .2.8 cu ft
- Quantity-distance class 1.4
- Storage comparability group . . . .G
- Chemical group . . . .B
- DOT hazard classification . . . . .. Irritant material
- DOT shipping name . . . . .. Irtitating agent, NOS
- DOT label . . . . . Irritant
- UNO Serial number 0301
- DODAC 1365-K532
- Drawing number 116-6-271

Carrier:
- Packing . . . .120/wooden box
- Weight . . . . . .25 lb
- Cube . . . . . 3 cu ft
- Drawing number 116-6-230

References:
FM 19-5
FM 19-15
TM 3-1365-204-10
TM 3-220
TM 3-250
TM 8-285

DISPERSER AND RIOT CONTROL AGENT, MANUALLY CARRIED: CSX, M32 AND CARRIER

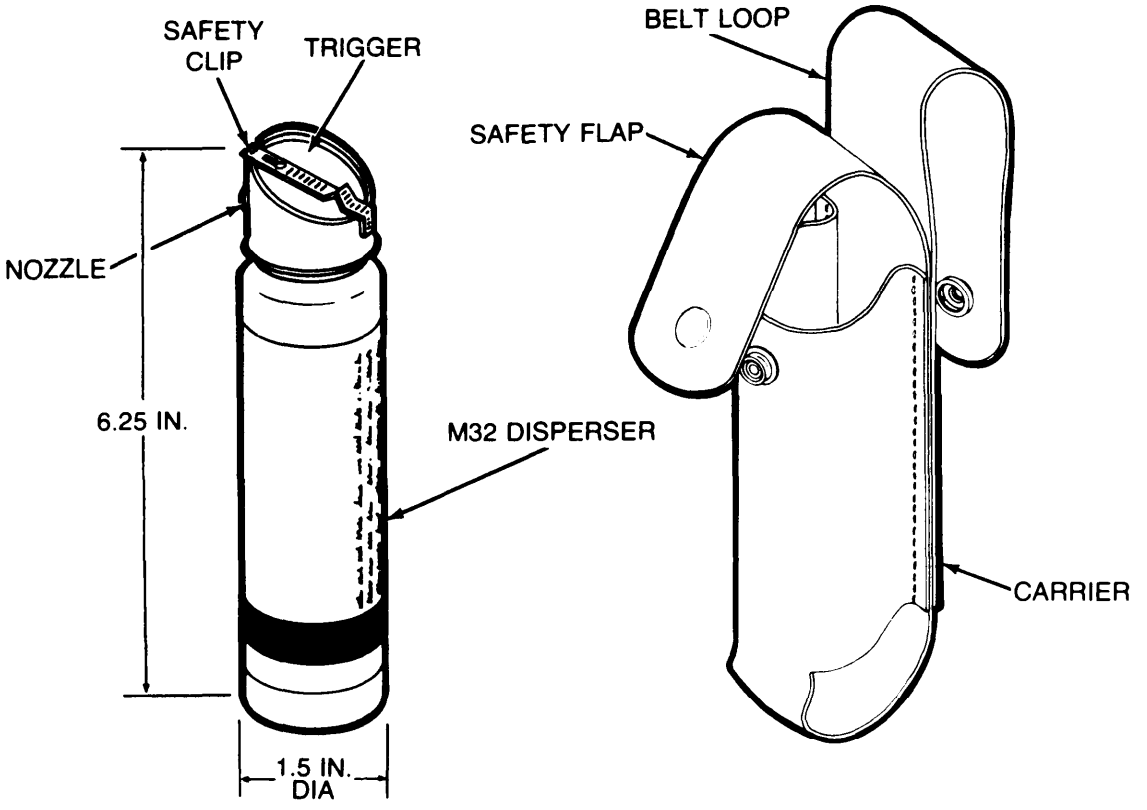

Type Classification:
STD (LCC-B); MSR06736031

Use:
To apprehend, control, or subdue unruly persons, trespassers, and rioters by spraying them with CSX riot control agent solution from a handheld pressurized can. The spray stings and irritates the eyes, skin, nose, throat, and lungs of exposed personnel.

Description:
The M32 disperser consists of a container, valve assembly, safety clip, and trigger. The container is an aluminum cylinder filled with a solution of CS riot control agent (CSX) pressurized with nitrogen gas. The thumb-operated trigger forms the top of the trigger cover, which fits down over the valve assembly. The safety clip is mounted across the top of the trigger. The carrier is a separately issued leather case with a safety flap and a belt loop, which are secured by snap fasteners to prevent accidental release. (The original carrier issued with the M32 disperser did not have these safety features.)

Functioning:
The CSX agent solution is released by first sliding back the safety clip and then pressing down on the trigger with the thumb. Trigger pressure opens the valve, which allows CSX agent solution to discharge. through the nozzle as a jet stream. When pressure on the trigger is released, the valve closes and the jet stream is shut off.

Tabu/ated Data: Except as noted all data applies to the M32 disperser.

NSN:
- M32 disperser 1365-00-179-4247
- Carrier 1365-00-179-4248
- Unit of issue . . . . Each
- Basis of issue . . . . . CTA 23-101 (M32 is a substitute for the M36 disperser)

Weight . . . . . .103 grams
Diameter . . . .1.5 in.
Length . . . .6.4 in.
Filling . . . .60 grams of CSX solution

Performance:

Pressure . . . . . 140 psig at 75°F
Range (jet stream) . . . .10 to 12ft
Operating time:
Continuous stream . . . .14 t0 20 sec
Short (1 sec) bursts . . . .20 t0 25 bursts

Shipping and Storage Data:

M32 disperser:
Packing . . . .In vapor-proof bags; 144/wooden box
Weight . . . .45 lb
Cube . . . .2.8 cu ft
Quantity-distance class 1.4
Storage comparability group . . . .G
Chemical group . . . .B
DOT hazard classification . . . . . Irritating material
DOT shipping name . . . . Irritating agent NOS
DOT label . . . . Irritant
UNO Serial number 0301
DODAC 1365-K531
Drawing number 116-6-219

Carrier:
Packing . . . . . 120/wooden box
Weight . . . .25 lb
Cube . . . . . 3 cu ft
Drawing number 116-6-230

References:

FM 19-5
FM 19-15
TM 3-220
TM 3-250
TM 8-285

DISPERSER, RIOT CONTROL AGENT, HELICOPTER OR VEHICLE-MOUNTED: M5

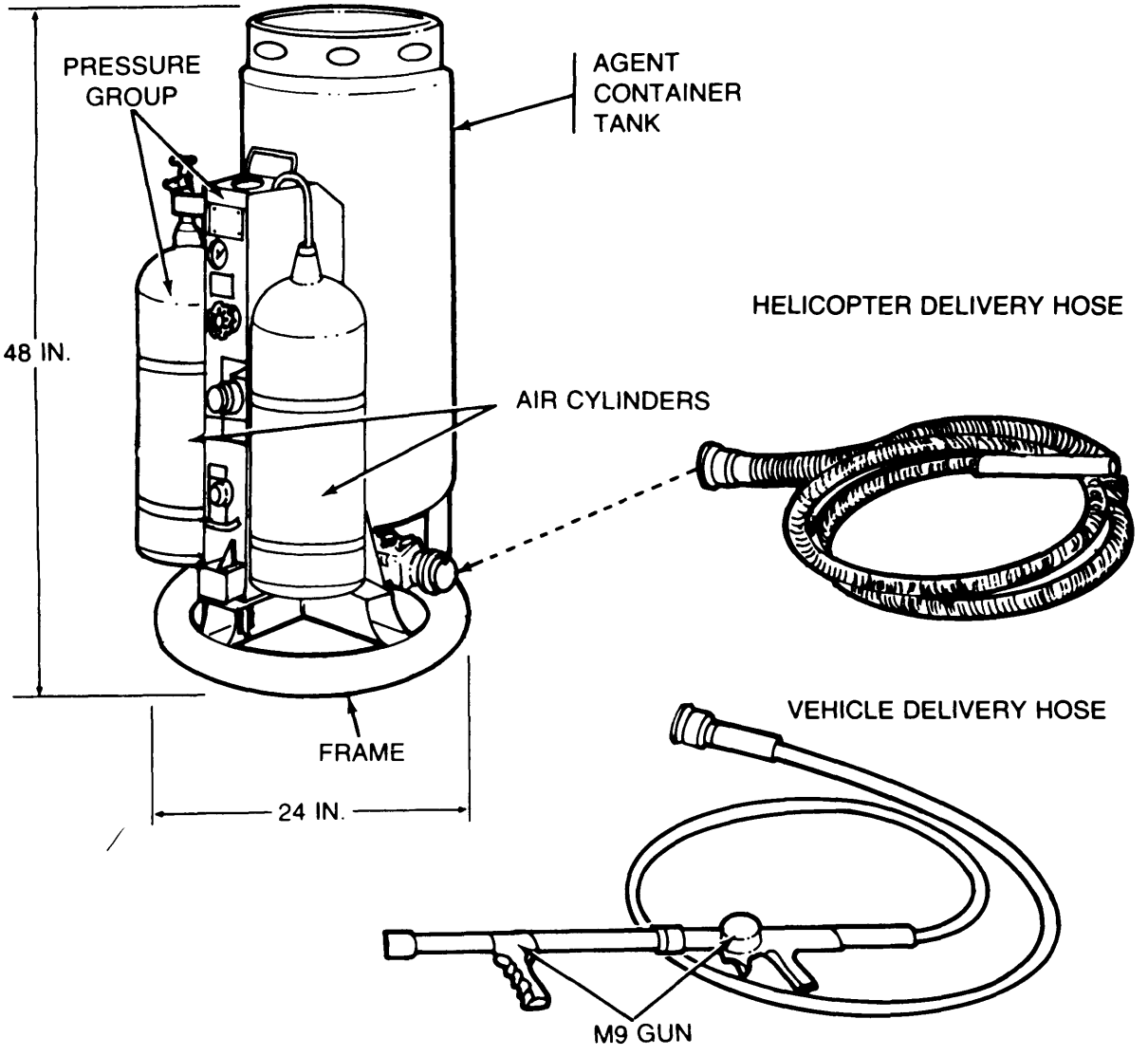

Type Classification:

STD (LCC-A); CCTC 3976 62

Use:

To spray bulk CS1 riot control agent from a cargo helicopter or aground vehicle toward or upon disorderly crowds, unruly mobs, or rioters. The spray stings and irritates the eyes, skin, nose, throat, and lungs of exposed personnel.

Description:

The M5 disperser consists of an agent container tank, a pressure group with two air cylinders, a tubular aluminum frame, an M9 gun with a 12-foot hose for vehicle mounting, a 12-foot discharge hose for helicopter mounting, and various controls and instruments. Fittings and holddown straps are provided for securing the disperser in a helicopter or ground vehicle.

Functioning:

The agent container tank is filled with CS1 riot control agent. When the operator removes a quick-release pin and opens a valve, pressurized air from the air cylinders forces the riot control agent from the agent container tank through the hose. When the disperser is mounted on a helicopter, the riot control agent can be dispersed from the hose nozzle. When the disperser is mounted on a ground vehicle, riot control agent can be dispersed through the gun nozzle toward the target.

Tabulated Data:

NSN 1040-00-805-3019
Line item number G22109
Unit of issue . . . . Each
Basis of issue . . . . AR 310-34: TOE/MTOE/TDA
Weight, empty . . . .174 lb
Weight, filled . . . .223 lb
Height . . . .48 in.
Width . . . .24 in.
Depth . . . .24 in.
Riot control agent filling:
CS1 powder . . . .49 lb
DODAC 1365-K768
Simulant agent filling:
T3 talc . . . . . .49 lb
NSN 6810-00-142-9849

Performance:

Pressure:
Operating . . . .45 to 55 psi
Compressed air cylinder . . . .. 1,900 t0 2,100 psi
Duration of firing . . . .2 min
Helicopter elevation . . . .75 to 100 ft
Ground vehicle range
instill air . . . .40 ft

Shipping and Storage Data:

Packing . . . . Wooden crate
Weight . . . .260 lb
Cube . . . .22 cu ft
Drawing number . . . . LM 116-6-166

References:

FM 19-15
TM 3-1040-220-12,-20P,35,-34P
TM 3-1040-221-12&P
TM 3-1040-251-15
TM 3-4310-100-110
TM 8-285
TM 750-157

DISPERSER, RIOT CONTROL AGENT, PORTABLE: M33 AND M33A1

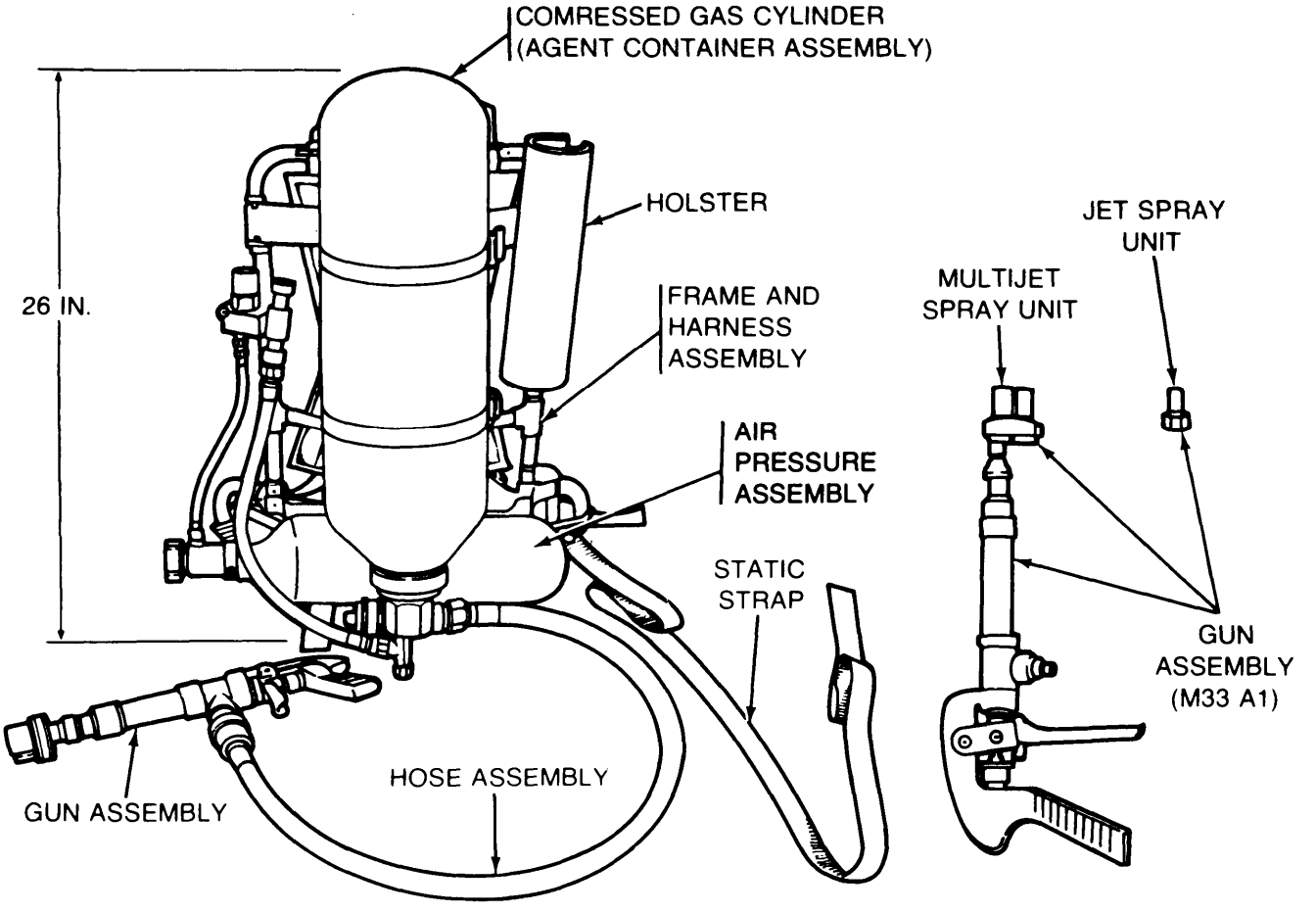

Type Classification:

M33A1 STD(LCC-A); MSR 11746022
M33 STD (LCC-B); MSR 04736105

Use:

To spray bulk CR solution and CS1 riot control agents under pressure toward or upon disorderly crowds, unruly mobs, or rioters. The spray stings and irritates the eyes, skin, nose, throat, and lungs of exposed personnel.

Description:

The disperser consists of a frame and harness assembly, an agent container assembly, an air pressure assembly, and a gun and hose assembly. Along check valve assembly and multijet spray unit are issued with the M33A1 disperser for spraying solutions. A short check valve assembly, an agent agitator, and a single jet spray are used to disperse powders. An extra agent container and compressed gas cylinder are provided to disperse two agent fills per mission. The frame and harness assembly includes a holster for the disperser gun when not in use and a static strap for attaching to the frame for grounding static electricity in dry weather.

Difference Between Models:

The M33 disperser does not have a long check valve assembly or a multijet spray unit and, therefore, cannot be used to disperse solutions. The M33 is not fitted with a holster.

Functioning:

The compressed gas cylinder of the air pressure assembly is pressurized with compressed air. The long check valve assembly and multijet spray unit are installed to disperse CR solution; or the short check valve assembly, the agent agitator, and the single jet spray are installed to disperse CS1. The agent container is filled with riot control agent. The operator opens a valve on the air pressure assembly and pulls the trigger on the gun assembly. Pressurized air from the air pressure assembly forces the riot control agent from the agent container, through the hose and gun assembly, and out the spray unit.

Tabulated Data:
NSN:
M33A1 1040-00-148-9824
M33 1040-00-450-6559
Line item number G22348
Unit of issue . . . .Each
Basis of issue . . . . . TOE/MTOE/TDA; AR310-34
Weight, empty . . . .22 lb
Weight,filled:
CR solution . . . .48 lb
CS1 powder . . . .30 lb
T3 talc . . . . . .30 lb
Length . . . .26 in.
Width . . . .17 5/16 in.
Depth . . . .12 1/8 in.
Riot control agent filling:
CR solution . . . . . .3 gal/26 lb
DODAC 1365-K758
CS1 powder . . . .8 lb
DODAC 1365-K768
Simulant agent filling:
T3 talc . . . .8 lb
NSN 6810-00-142-9849

Performance:
Pressure:
Operating . . . .180± 20 psi
Compressed air cylinder . . . .. 2.000 t0 2,100 psi
Duration of firing (continuous):
CR solution . . . .60 sec
CS1 powder . . . .40 sec
T3 talc . . . .40 sec
Maximum range:
CR solution . . . .40 ft
CS1 powder . . . . . 40 ft in still air
T3 talc . . . . . .40 ft in still air

Shipping and Storage Data:
Each disperser is packed in two wooden boxes.
Weight . . . .59 lb
Cube . . . . . .1.0 cu ft
Drawing number . . . . DL 116-3-124 and 125

References:
FM 19-15
SC 1040-95-CL-A01
TM 3-1040-251-15
TM 3-1040-262-13&P
TM 3-220
TM 3-4310-100-10

DISPERSER, RIOT CONTROL AGENT, PORTABLE: M3

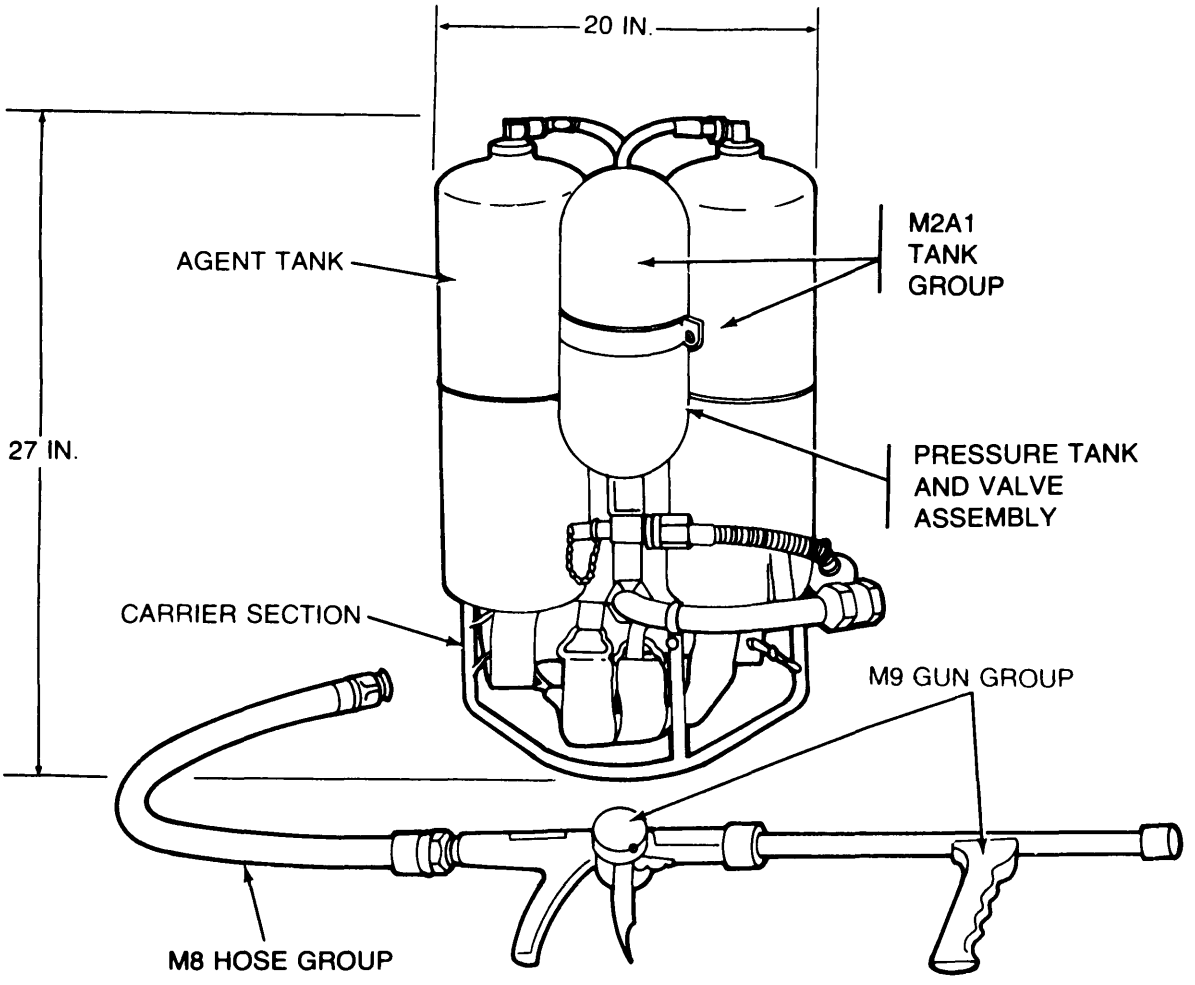

Type Classification:
CON (LCC-F); MSR 04736105

Use:
To spray bulk CS1 riot control agent from a backpacked container toward or upon disorderly crowds, unruly mobs, or rioters. The spray stings and irritates the eyes, skin, nose, throat, and lungs of exposed personnel.

Description:
The disperser consists of an M2A1 tank group, an M8 hose group, and an M9 gun group. The M2A1 tank group includes two aluminum agent tanks, a pressure tank and valve assembly, and a carrier section with a frame and harness. The M8 hose group is a fabric-covered, flexible hose with couplings at each end. The M9 gun group consists of a valve section and a barrel section.

Functioning:
The pressure tank is pressurized with compressed air. The agent tank is filled with a riot control agent. The operator opens a valve on the pressure tank and valve assembly and pulls the trigger on the valve section of the M9 gun group. Pressurized air from the pressure tank forces the riot control agent from the agent tank through the hose and gun and out the gun barrel.

Tabulated *Data:*

NSN 1040-00-711-8296
Line item number G22246
Unit of issue . . . .Each
Basis of issue . . . . . AR310-34 (as a substitute for the M33A1 disperser LIN G22348)
Weight, empty . . . .47 lb
Weight, filled . . . .55 lb
Length . . . .27 in.
Width . . . .20 in.
Depth . . . .11 in.
Riot control agent filling:
CS1 powder . . . .8 lb
DODAC 1365-K768
Simulant agent filling:
T3 talc . . . .8 lb
NSN 6810-00-142-9849

Performance:

Pressure tank (charged) . . . . 1.700 to 2,100 psi
Duration of firing:
Single burst . . . .19 sec
Short bursts (5-6 sec duration) . . . .30 sec
Range (in still air): . . . .40 ft

Shipping and Storage Data:

Packing . . . .One per wooden box
Weight . . . .100 lb
Cube . . . . . .6.8 cu ft
Drawing number . . . . LM 116-3-40

References:

FM 19-15
TM 3-1040-214-12,-20P,-35,-35P
TM 3-1040-221-12&P
TM 3-1040-251-15
TM 3-220
TM 3-4310-100-10
TM 750-157

LAUNCHER, PROJECTILE, 64 MILLIMETER: RIOT CONTROL, M234

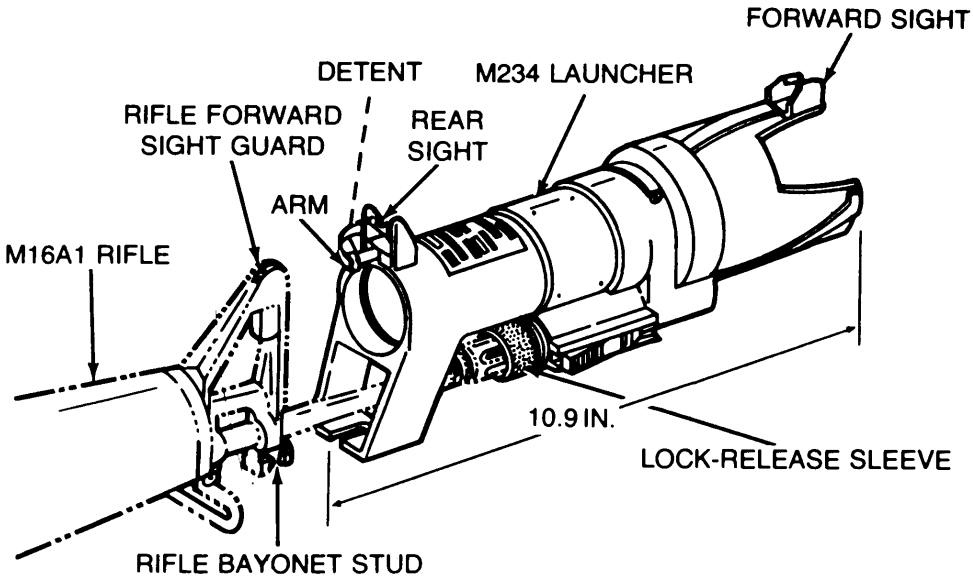

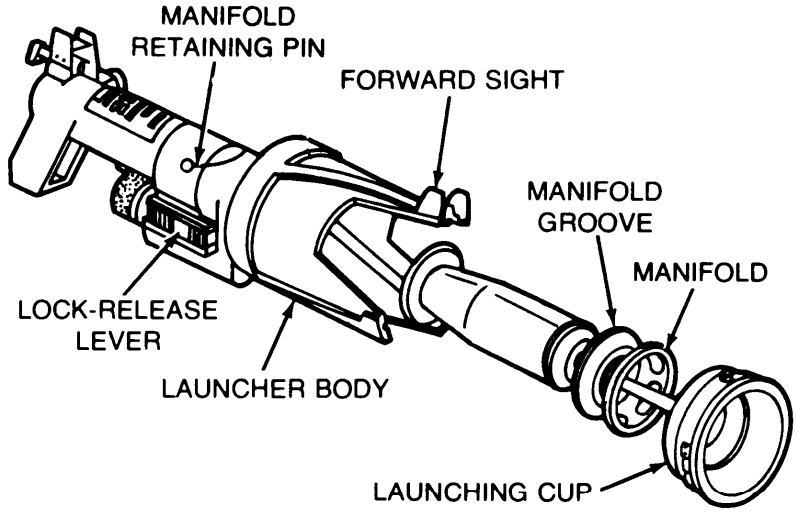

Type Classification:

STD (LCC-A); MSR 04786005

Use:

To launch 64-mm projectiles from an M16A1 rifle at rioters to prevent them from approaching close enough to throw rocks or other injurious objects at the riot control unit or property being protected.

Description

The M234 launcher consists of an aluminum casting with a lock-release sleeve and levers, an arm and buffer housing, and forward and rear sights. Attached to the launching cup are a manifold, a buffer, and a retaining plate which are part of the internal launching mechanism. A detent holds the launching cup in a retracted position.

Functioning:

The M234 launcher is installed on the rifle so that the arm fits on the forward sight of the rifle, the buffer housing fits over the bayonet stud, and the flash suppressor bottoms inside the housing of the launcher. An M742 CS or M743 kinetic energy 64-mm projectile is seated in the launching cup chamber. The 64-mm projectile is a flexible plastic ring molded to form an airfoil cross section 64-mm in diameter and about an ounce in weight. When the rifle is fired, an M755 blank 5.56-mm cartridge supplies propellant gases to the launcher. These gases

force the launching cup fonward. Three rifling grooves inside the launcher body engage three matching keys in the launching cup to spin the projectile as it is propelled from the launcher. Spinning stabilizes the projectile in flight. Air, passing around the ring airfoil surfaces, generates lift for the projectile on its way to the target.

Tabulated Data:

NSN 1010-01-014-6506
Model M234
Line item number L45105
Unit of issue . . . . Each
Basis of issue . . . . CTA 50-915
Weight . . . .2.06 lb
Length . . . . . .10.9 in.
Width . . . .3.4 in.

Projectile, 64-mm: Riot Control, CS, M742 w/CRTG M755

DODAC 1310-B639
Unit pack . . . . . Six projectiles and six blank cartridges are stored and issued in a carrier

Projectile, 64-mm: Riot Control, Kinetic Energy, M743 w/cRTGM755

DODAC 1310-B638
Unit pack . . . . . Six projectiles and six blank cartridges are stored and issued in a carrier

Performance:

Effective range of projectiles:

Maximum range . . . . 100 meters
On groups of individuals . . . .60 meters
On individual . . . .40 meters

Rate of fire . . . .Four to six projectiles per minute

Shipping and Storage Data:

Packing . . . .One per wooden box
Weight . . . . . 12.6 lb
Cube . . . .1 cu ft
Drawing number 122-3-30

References:

FM 19-15
FM 23-19
TM 3-1010-224-10
TM 3-1010-224-20&P
TM 9-1005-249-10
TM 43-0001-28
TM 43-0002-31

RIOT CONTROL AGENT: CR SOLUTION

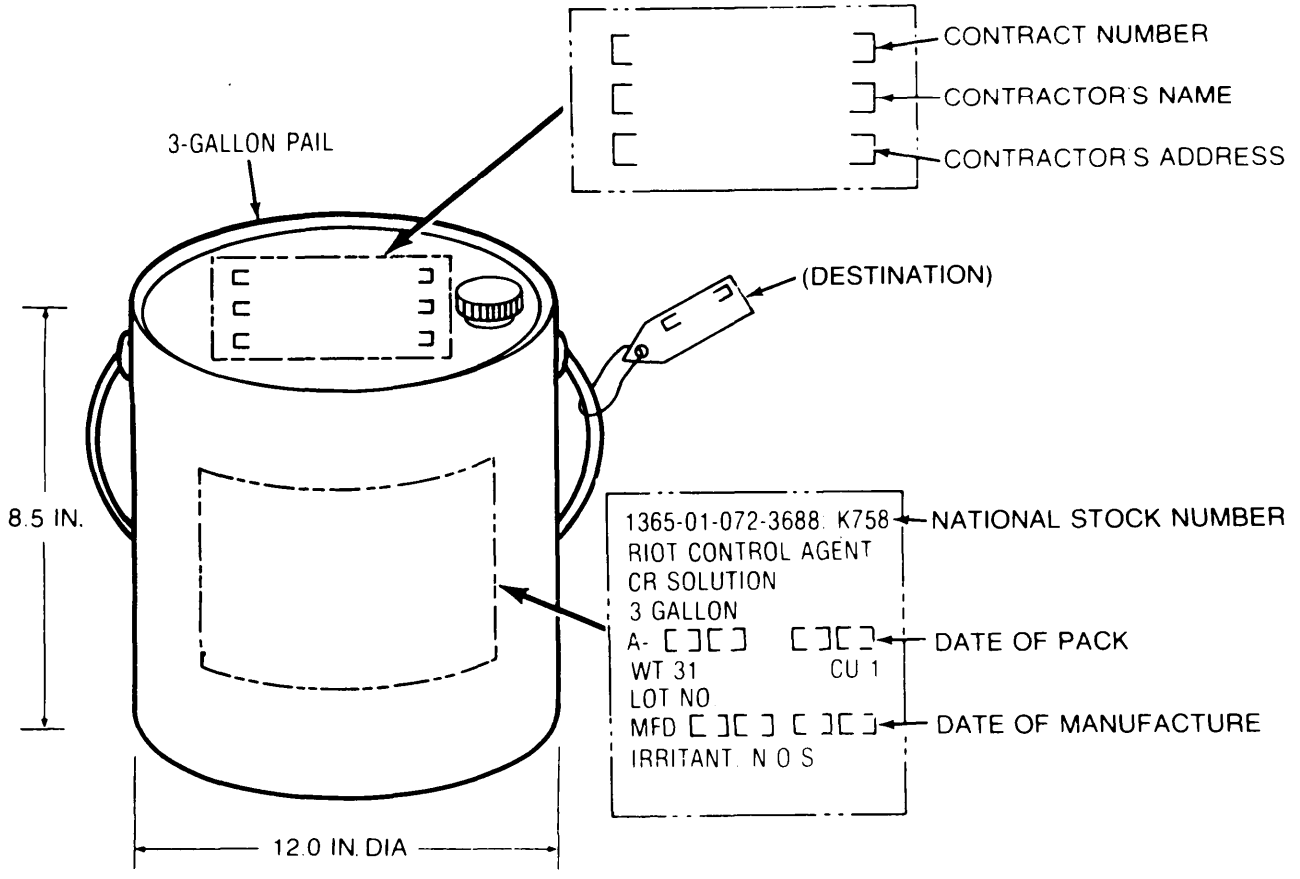

Type Classification:

STD (LCC-A); MSR 11746022

Use:

To apprehend, control, or subdue unruly persons, trespassers, and rioters by spraying them with CR riot control agent solution from an M33A1 portable riot control agent disperser.

Description:

CR solution is a clear liquid riot control agent consisting of 0.1 percent CR dissolved in a solution of 80 parts propylene glycol and 20 parts water. The CR solution is stored, shipped, and issued in a 3-gallon metal pail. The pail has a carrying handle and a short, threaded pouring spout with a screw cap.

Functioning:

The CR solution is transferred from the pail to the M33A1 disperser agent tank by using the transfer tube assembly from an M254 service kit. The CR solution is sprayed under pressure from an M33A1 disperser to form a jet stream, which breaks into droplets. CR immediately and severely stings the skin, eyes, nose, and throat of exposed personnel. Prolonged exposure to CR solution may make the skin very sensitive for hours or days when rubbed or washed. This sensitivity is similar to that associated with a mild burn without the redness of a bum. Exposed personnel may occasionally develop an allergy to CR with these symptoms. CR is also persistent in the environment and on clothes since it is not broken down by water.

Tabulated Data:

NSN 1365-01-072-3666
Unit of issue . ... Gallon
Basis of issue . . . . CTA 23-101
Type container . . . .3-gallon pail
Weight, ...35 to 40 lb
Diameter . . . .12 in.
Height . . . .8.5 in.

Composition and percentage:
Dibenz
(b, f)-1,4-oxazepine (CR) . . . .0.1 percent
Propylene glycol . . . .80 parts
Water . . . .20 parts
Vapor density
(compared to air) 2.62
(propylene glycol)
Boiing point . . . .336°F
Flash point . . . .210°F
(propylene glycol)
Explosive limits (percent by volume in air):
Lower 2.62%
(propylene glycol)
Upper 12.55%
(propylene glycol)
Autoignition temperature . . . .750°F
(propylene glycol)
Specific gravity 1.05
Stability in storage . . . . Stable at ambient and elevated temperatures

Shipping and Storage Data:
Packing . . . .3 gallons per metal pail (up to 36 pails per pallet)
Weight . . . .40 lb per pail
cube . . . . . .1cu ft
HCSDS number 20006
Quantity-distance class 6.1
Storage comparability group . . . .G
Chemical group . . . .B
DOT hazard
classification . . . . . Irritating material, liquid
DOT shipping name . . . .lrritating agent, NOS
DOT label . . . .lrritant
UNO serial number 20006
DODAC 1365-K758
Drawing number 18-60-1327

References:
FM 19-15
SC 1340/98-IL
TM 3-1040-262-13&P
TM 3-250

RIOT CONTROL AGENT: CS1

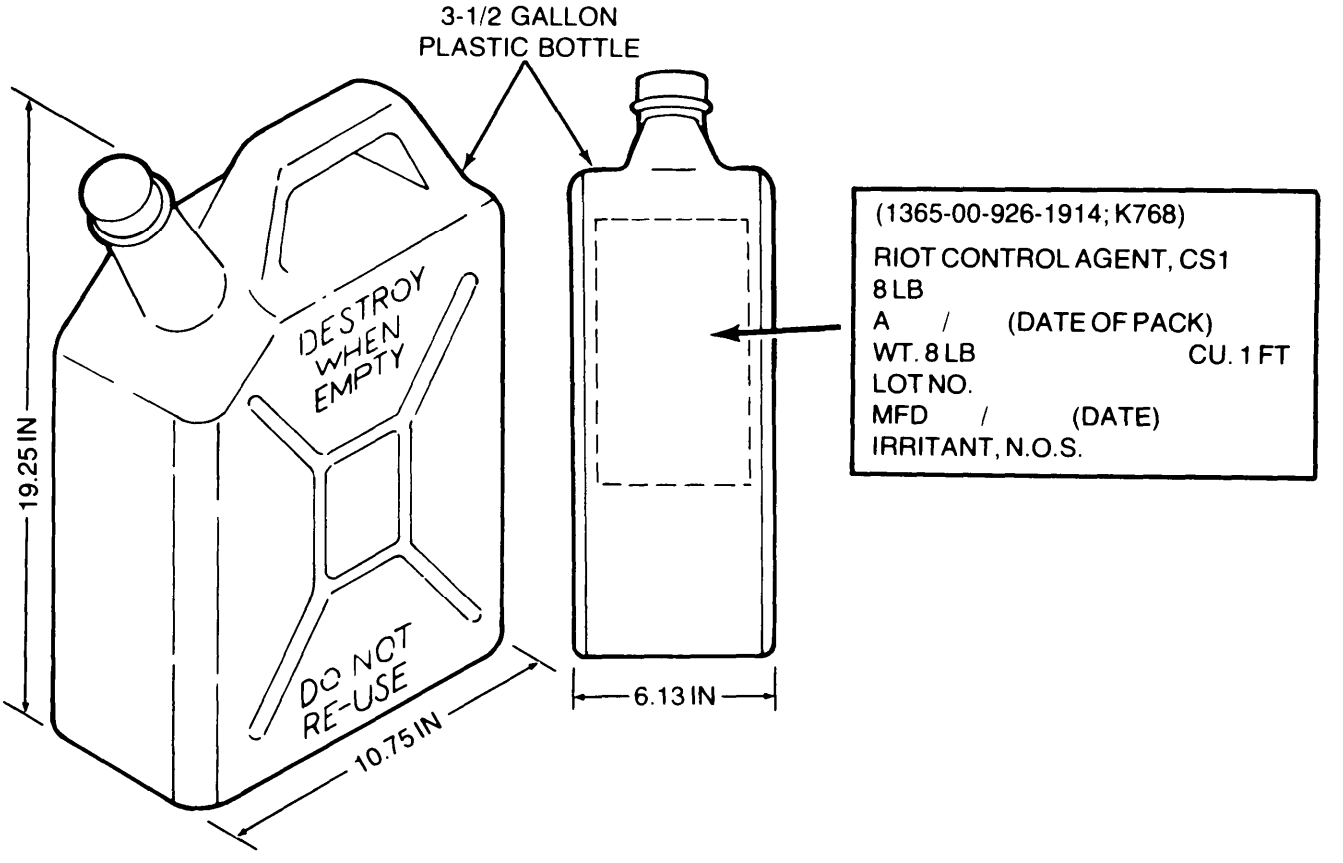

Type Classification:

STD (LCC-A); CCTC 358159

Use:

To apprehend, control, or subdue mobs, and rioters by spraying them with CS1 riot control agent powder from portable, vehicle-mounted, or helicopter-mounted riot control agent dispersers.

Description:

CS1 is a fine, white micropulverized mixture of about 95 percent CS riot control agent and 5 percent silica aerogel. The silica reduces clumping. The CS1 is stored and issued in a 3-gallon plastic bottle which holds 8 pounds of riot control agent powder. On top of the bottle is a molded carrying handle and a threaded pouring spout with a screw cap. Instructions “DESTROY WHEN EMPTY - DO NOT REUSE” are stamped on two sides of the bottle. Identification markings are stenciled on the back side of the bottle.

Functioning:

The CS1 is transferred from the bottle to the riot control agent dispersers by using the transfer tube assembly from an M254 service kit. When CS1 is sprayed from a disperser, a cloud of airborne CS1 particles is formed. The particles travel downwind from the release point. CS1 immediately and severely stings the skin, eyes, nose, and throat of exposed personnel. The symptoms are redness of the skin, tears, running nose, coughing, and tightness in the chest. The onset of these symptoms is extremely rapid. Incapacitating dosages lose their effects in 5 to 10 minutes.

Tabulated Data:

NSN 1365-00-926-1914
Unit of issue . . . . Pound
Basis of issue . . . . CTA 23-101
Type container . . . .3 1/2-gallon screw cap plastic bottle
Weight . . . .8 lb (fill)
Dimensions . . . .19.25 x 10.75 x 6.13 in.

Composition and percentage:
O-chlorobenzyl-malononitrile (CS) . . . .94 to 96 percent
Silica aerogel . . . .4 to 6 percent
Stability in storage . . . . Very stable

Shipping and Storage Data:
Packing . . . .3 1/2-gallon plastic bottle; 8 lb per bottle; 5 bottles per wooden box
Weight . . . .84 lb
Cube . . . .5.8 tuft
Quantity-distance class 1.4
Storage comparability group . . . .G
Chemical group . . . .B
DOT hazard classification . . . . . Irritating material, solid
DOT shipping name . . . . irritating Agent. NOS
DOT label . . . . Irritant
UNO serial number 1693
DODAC 1365-K768
Drawing number . . . .18-60-1086.1283 and 1322

References:
FM 19-15
TM 3-1040-214-12
TM 3-1040-220-12
TM 3-1040-221-12
TM 3-1040-262-13&P
TM 3-250

RIOT CONTROL AGENT: CS2

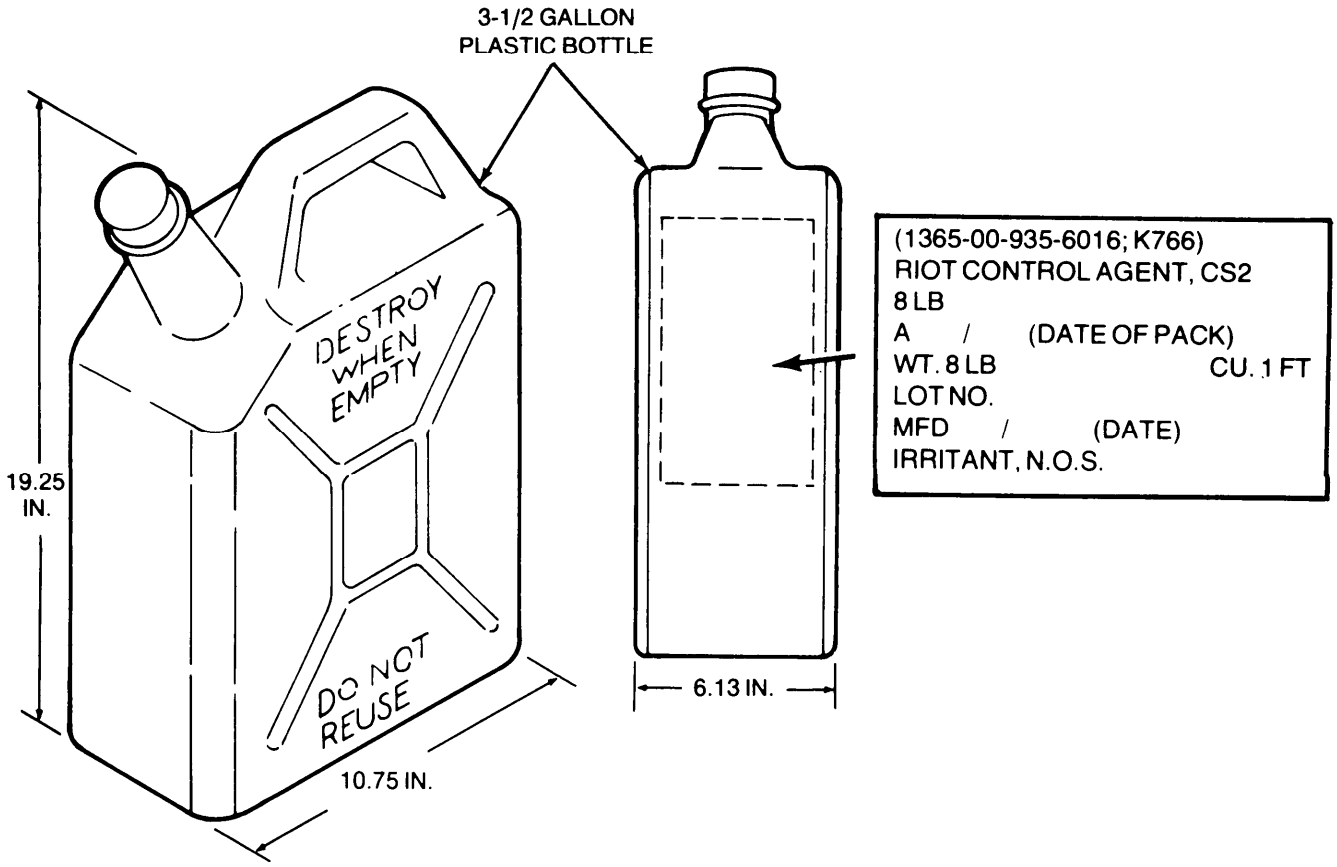

Type Classification:

STD (LCC-A); AMCTC 600768

Use:

To apprehend, control, or subdue mobs and rioters by spraying them with CS2 riot control agent powder from portable, vehicle-mounted, or helicopter-mounted riot control agent dispersers. CS2 may also be blown or poured into tunnels or underground fortifications to flush out enemy personnel.

Description:

CS2 is a uniformly blended mixture of 93 to 96 percent by weight of micropulverized CS and 4 to 7 percent by weight of fumed silica treated with Hexamethyldisiloxane (HMDS). The HMDS silica prevents clumping and improves flow of the agent during pouring or dispersing. It also makes the agent water-repellent prolonging its effectiveness. CS2 is stcred and issued in a 3 1/2-gallon plastic bottle which holds 8 pounds of riot control agent powder. On top of the bottle is a molded carrying handle and a threaded pouring spout with a screw cap; Instructions, “DESTROY WHEN EMPTY - DO NOT REUSE,” are stamped on two sides of the bottle. Identification markings are stenciled on the back side of the bottle.

Functioning:

The CS2 is transferred from the bottle to the riot control agent dispersers by using the transfer tube assembly from an M254 service kit. When CS2 is sprayed from a disperser, a cloud of airborne CS2 particles is formed. The particles travel downwind from the release point. The powder agent settles and readily infiltrates terrain, vegetation, personnel, and equipment. It floats on water and, when disturbed, it reaerosolizes to cause desired incapacitating effects. Effectiveness on open terrain under normal weather conditions lasts approximately 30 days. The CS2 particles immediately and severely sting the skin, eyes, nose, and throat of exposed personnel. The symptoms are redness of the skin, tears, running nose, coughing, and tightness in the chest. The onset of these symptoms is extremely rapid. Incapacitating dosages lose their effects in 5 to 10 minutes.

Tabulated Data:

NSN 1365-00-935-6016
Unit of issue . . . . Pound
Basis of issue SB38-26
Type container . . . .3 1/2-gallonscrew cap plastic bottle
Weight . . . . . .8 lb (fill)
Dimensions . . . .19.25 x 10.75 x 6.13 in.
Composition and percentage:
O-chlorobenzyl-malononitrile (CS) . . . .93 to 96 percent
HMDS-treated fumed colloidal silica . . . . . .4 to 7 percent
Hexamethyldisiloxane(HMDS)..... . . 10 percent
Silica . . . . . .90 percent
Stability in storage . . . . Vey stable

Shipping and Storage Data:

Packing . . . .3 1/2-gallon plastic bottle; 8-lb per bottle; 5 bottles per wooden box
Weight . . . .84 lb
Cube . . . . . .5.8 cu ft
Quantity-distance class 1.4
Storage comparability group . . . .G
Chemical group . . . .B
DOT hazard classification . . . . . Irritating material solid
DOT shipping name . . . . irritating Agent. NOS
DOT label . . . .Irritant
UNO serial number 1693
DODAC 1365-K766
Drawing number . . . .18-60-1086, 1283 and 1322

References:

FM 19-15
TM 3-250
TM 3-1040-214-12
TM 3-1040-220-12
TM 3-1040-221-12
TM 3-1040-262-13&P

CHAPTER 4
SMOKE

	P8ge
Fuze, Smoke Pot: Electric, M209	4-3
Generator, Smoke, Mechanical: Pulse Jet, M3A3 (Deleted)	4-5
Generator, Smoke, Mechanical: Pulse Jet, M3A4	4-6.1
Generator, Smoke, Mechanical: Pulse Jet, M157	4-6.3
Launcher, Grenade, Smoke: HC and WP, M176	4-8.1
Launcher, Grenade, Smoke: HC, M226	4-8.5
Launcher, Grenade, Smoke: Screening, RP, M239	4-7
Launcher, Grenade, Smoke: Screening, RP, M243	4-9
Launcher, Grenade, Smoke: Screening, RP, M250	4-11
Launcher, Grenade, Smoke: Screening, RP, M257	4-13
Launcher, Grenade, Smoke: Screening, RP, M259	4-14.1
Launcher, Projectile, Liquid, Airburst: M267	4-8.3
Mount, Fog Oil Drum: M3	4-15
Mount, Smoke Generator Assembly: M2	4-16.1
Mounting Kit, Smoke Generator: M284	4-16.3
Smoke Generating Subsystem, Helicopter: M52	4-17
Smoke Pot: Floating, HC, M4A2	4-19
Smoke Pot: Floating SGF2, AN-M7A1	4-21
Smoke Pot: HC, 10-Pound, M1	4-23
Smoke Pot: HC, 30-Pound, ABC-M5	4-25

FUZE, SMOKE POT: ELECTRIC, M209

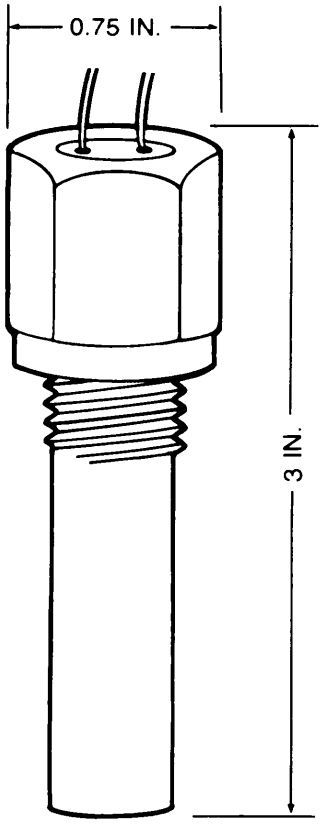

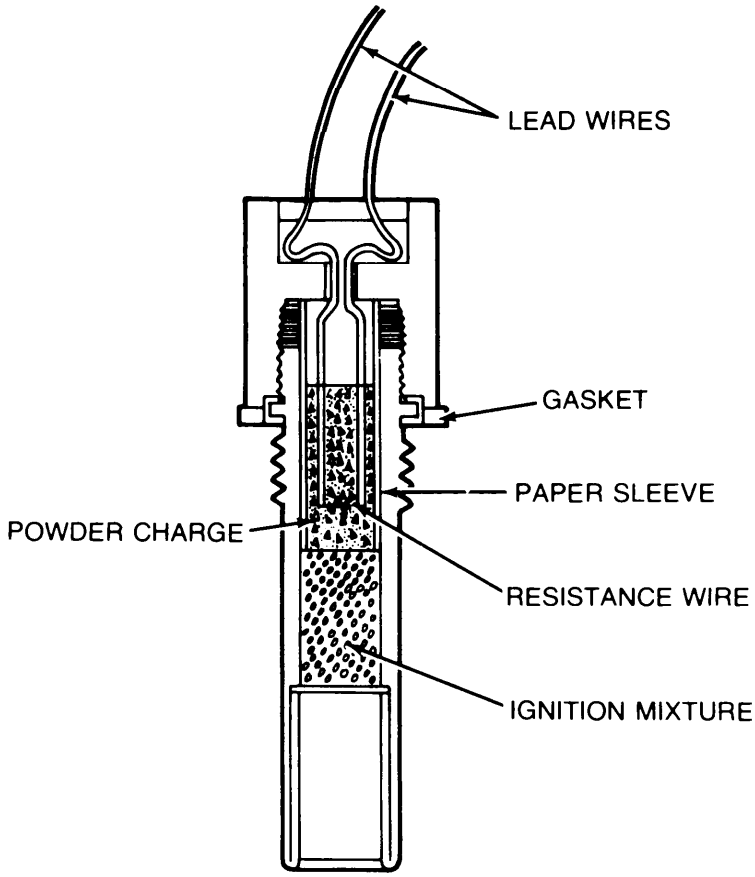

Type Classification:
STD (LCC-A); MSR 11756003

Use:
To ignite M7A1 smoke pots by remote control electrical firing. This method is used for small area screening operations when a number of smoke pots must be ignited simultaneously at different locations.

Description:
The M209 electric smoke pot fuze consists of a fuze cap, a fuze delay housing, two lead wires, a resistance wire, a powder charge, and an ignition mixture. The identification “FUZE M209° and lot number are stamped on the sides of the cap. Below the cap are large screw-threads and a gasket to mate the fuze with the fuze well of an M7A1 smoke pot.

Functioning:
To prepare the M7A1 smoke pot for electrical ignition, the M208 mechanical fuze is removed first. The M209 fuze is screwed into the fuze well of the M7A1 smoke pot. The lead wires from the fuze are connected to an electric firing circuit. The electric current flows through lead wires to the resistance wire. A current flowing through the resistance wire in the fuze heats the wire, which ignites the powder charge. The powder charge ignites the ignition mixture. Flame from the burning mixture shoots out the open end of the fuze, completing the fuze action. This flame passes down the venturi tube of the smoke pot and ignites the starter mixture in the fuel block. When the fuel block is ignited, the smoke pot generates smoke by heating the fog oil to form a white smoke cloud.

Tabulated Data:

NSN (box of 300 each)	1365-00-025-3280
Unit of issue	Each
Basis of issue	Per M7A1 smoke pot as required for smoke operations
Model	M209
Weight	2 oz
Diameter	0.75 in.
Length	3.00 in.

Body . . . . Cadmium-plated steel
Type . . . . Electrical igniting (squib)
Ignition mixture:
Iron oxide 50%
Powdered titanium 32.5%
Powdered zirconium 17.5%

Performance:
Flash length , ...6 in. minimum
Electric resistance . . . . 0.60 to 1.10 ohm

Shipping and Storage Data:
Packing . . . .300 fuzes per wooden box
Weight . . . . . .76.2 lb
Quantity-distance class . . . . . (04)1.2
Storage comparability group . . . .B
DOT hazard classification . . . . . Class C explosive
DOT shipping name . . . . Special Fireworks
DOT label . . . . Percussion fuzes, handle carefully, explosive
DODAC 1365-K886
Drawing number 36-7-25. 36-7-44

References:
FM 3-50
SB 3-30-174
SC1340/98-IL
TB CML 100

GENERATOR, SMOKE, MECHANICAL: PULSE JET, M3A4

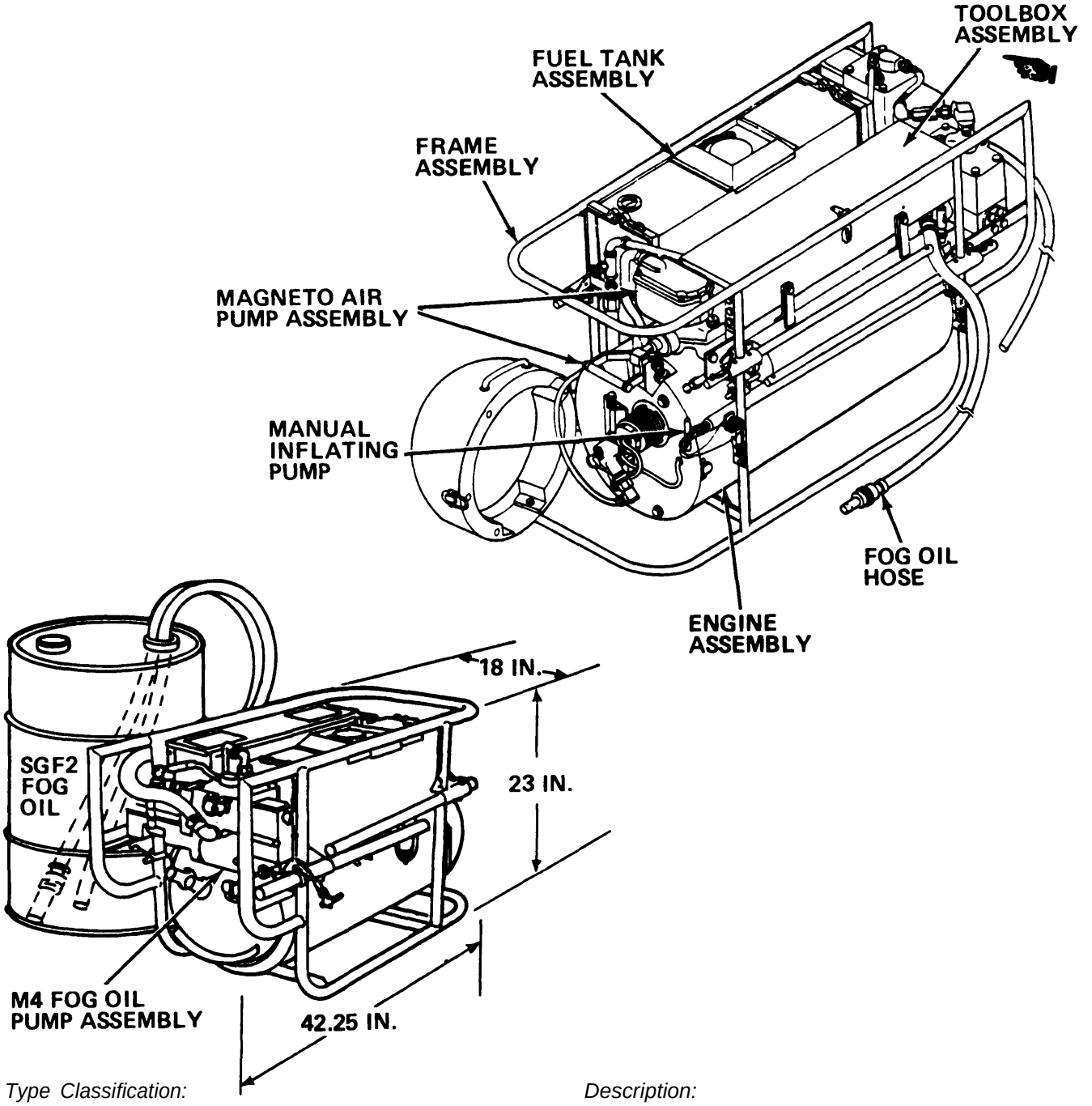

Type Classification:

STD (LCC-A); MSR 01846010

Use:

To generate large-area smoke screens that will reduce direct visual observation and conceal troops, vehicles, or installations from enemy view. Can be operated on ground or from truck, trailer, boat, or other level base.

Description:

The M3A4 pulse jet mechanical smoke generator consists of an engine assembly, fuel tank assembly, air pump assembly (manual inflating pump), magneto air pump assembly, M4 fog oil pump assembly, fog oil inlet hose (rubber hose assembly), tool box assembly, and frame assembly. On-board spares and tools are provided in the tool box as components of the end item (COEI).

Functioning:

The M3A4 smoke generator uses gasoline as its fuel and a single cycle, pulse-jet engine to vaporize fog oil and generate smoke. The fog oil inlet hose and an exhaust hose connect the M4 fog oil pump to the fog oil source, e.g., 55-gallon drum of SGF2 fog oil. (Below 32°F, a mixture of SGF2 oil and kerosine is used.) Pumping the air pump handle pressurizes the air accumulator to 60 psig. The fuel tank supplies fuel by gravity flow to the carburetor reservoir on the adjustable float assembly of the engine assembly. Opening the carburetor reservoir fuel shutoff cock while pressing the control valve on the air accumulator forces a mixture of fuel and air through the engine head assembly into the combustion chamber of the engine manifold. Pumping the handle on the magneto-air pump assembly energizes the ignition magneto which supplies the electrical current to the spark igniter. Sparks from the spark igniter ignite the fuel-air mixture. Hot gases in the combustion chamber explode successive charges of fuel-air mixture. The engine exhaust gases drive the fog oil pump, drawing fog oil from the storage drum and injecting the oil into the engine tube. The hot gases in the combustion chamber move past the fog oil injection nozzle at a high velocity and vaporize the fog oil. The fog oil vapor is expelled through three discharge nozzles into the atmosphere where the vapor condenses into small droplets to form a dense white smoke cloud. After shutdown, i.e., stopping, fuel and fog oil flow to the engine, hot engine exhaust gases are purged from the engine tube by pumping the handle on the magneto air pump assembly

Tabulated Data:

NSN 1040-01-143-9506
Line item number J30492
Unit of issue ..... Each
Basis of issue ..... TOE/MTOE/TDA; AR 310-34
Weight (empty) ..... 180 lb
Weight (filled) ..... 200 lb
Length ..... 42.25 in.
Width ..... 18 in.
Height ..... 23 in.
Engine type ..... Pulse jet, single cycle, air-cooled
Starting method ..... Hand-operated magneto and air pump
Spark igniter size 18mm
Fog oil pump:
  Model number M4
  Type ..... Pressure-driven air motor-oil pump
Fog oil:
  Type SGF2
  NSN 9150-00-261-7895
  Basis of issue ..... CTA 50-970
Kerosine:
  NSN 9140-00-242-6751

Performance:

Engine ..... 60 pulses per second
Smoke production ..... 30 seconds after starting engine
Gasoline:
  Tank capacity ..... 3 1/2 gal (15.41)
  Octane rating ..... 76 or higher
  Consumption rate ..... 3 GPH
Fog oil:
  Minimum consumption rate ..... 25 GPH
  Maximum ..... 50 GPH
  Normal ..... 40 GPH (sustained)

Shipping and Storage Data:

Packing ..... One per wooden crate
Weight ..... 260 lb
cube ..... 20 cu ft
Drawing number E31-15-2000

References:

FM 3-50
FM 3-54C1/2
TM 3-1040-276-10
TM 3-1040-276-23
TM 3-1040-276-23P

GENERATOR SET, SMOKE, MECHANICAL: PULSE JET, M157

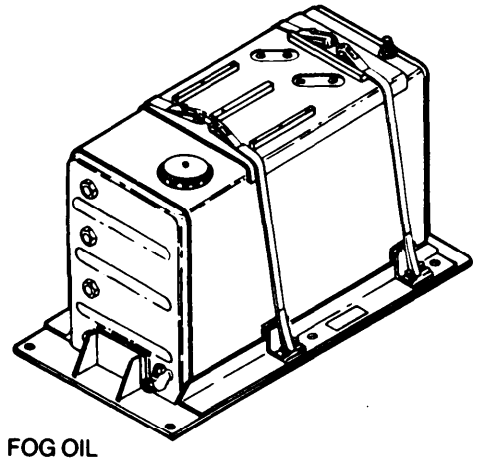

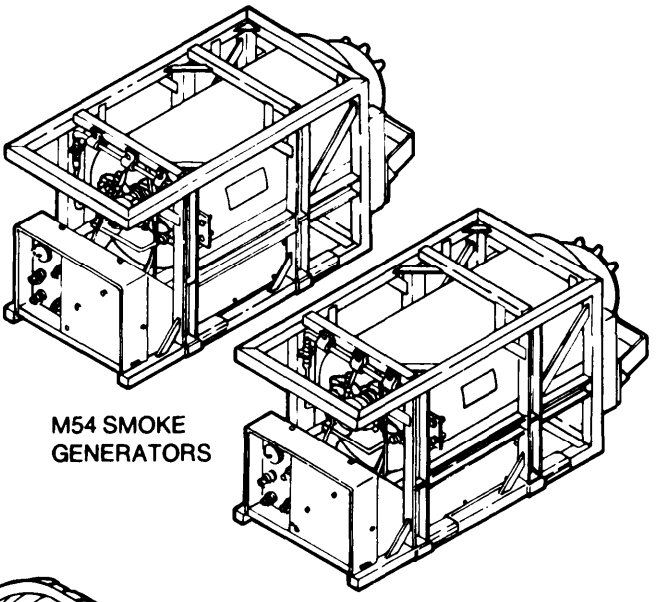

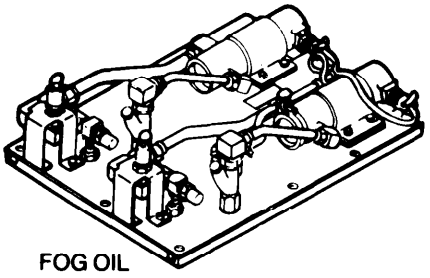

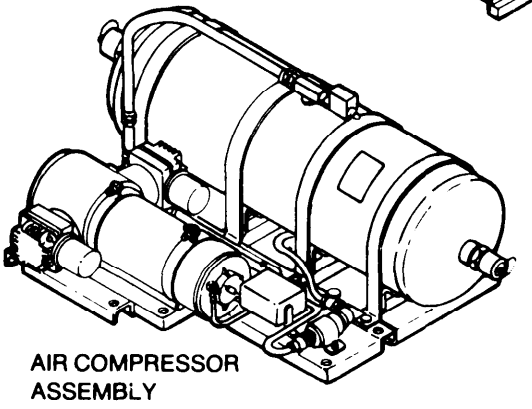

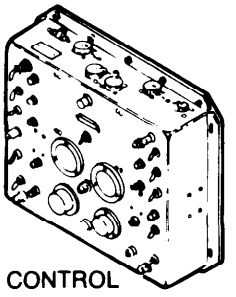

Type Classification:

STD (LCC-A); MSR 01866010

Use:

Either on the move or in a static position, the smoke generator set is capable of producing large area smoke screens to support various tactical situations. The M 157 smoke generator set mounted on the Ml 037 HMMWV can be used to mask airfield troop movements, artillery, and other tactical missions. The Ml 059 mechanized system will be used to support mechanized infantry and armor unit missions.

Description:

The M157 pulse jet mechanical generator set consists of a control panel assembly, M54 smoke generator assembly, fog oil tank, air compressor assembly and fog oil pump assembly. The pulse jet engine is started initially by a mixture of fuel from the 5-gallon fuel tank and compressed air from the air compressor being supplied to the M54 smoke generator and into the combustion chamber. Holding the ENGINE switch at the control panel in the START position allows the air/fuel mixture into the chamber, and a spark applied at the igniter causes them to explode. The positive pressure developed as this explosion occurs closes the engine valve and forces the burning gases through the engine tube. Reflection of the shock wave off the engine valve develops a negative pressure on the combustion chamber side of the engine valve. The negative pressure permits external air under atmospheric pressure to enter the combustion chamber. As the air passes over the nozzle assembly, fuel is forced into the airstream. Once again, the fuel/air mixture is forced through the

engine valve and into the combustion chamber, where the mixture is exploded by the heat of the pulse jet engine. After the ENGINE indicator lights, the ENGINE switch on the control panel assembly can be released to RUN. The successive charges of air/fuel mixture will be exploded by contact of the hot gases and metal in the combustion chambers. The frequency of explosions in the pulse jet engine is approximately 60 times per second. The FOG OIL FLOW control knob on the control panel assembly controls the flow of oil from the fog oil tank, to the fog oil pump assembly, to the pulse jet engine. The vaporization occurs as the fog oil is mixed with the engine exhaust gases produced when the fuel/air mixture is exploded. The vaporized fog oil is forced out into the atmosphere, where it cods and condenses into very small Iquid droplets which make up the smoke.

Tabulated Data:

NSN . . . . w/120 gal. fog oil tank 1040-01-206-0147
NSN . . . . . w/80 gal. fog oil tank 1040-01-293-5496
Line item number.....G51840
Unit of issue .....SE
Generator assembly, M54:
Weight ..... 175 lb (79.38 kg)
Length .....40 1/2 in. (102.87 cm)
Width .....16 1/2 in. (41.91 cm)
Height.....20 in. (50.80 cm)
Control panel assembly:
Weight .....20 1/2 lb (9.3 kg)
Length .....20 1/2 in. (52.07 cm)
Width .....4 1/2 in. (11.43 cm)
Height. . . . . .17 in. (43.18 cm)
Fog oil pump assembly:
Weight.....38 1/2lb(17.47 kg)
Length..... ..... 16 3/4 in. (42.55 cm)
Width ..... 21 1/8 in. (53.66 cm)
Height .....7 in. (17.78 cm)
Air compressor assembly:
Weight.....80 lb (176.37 kg)
Length.....20 1/2 in. (52.07 cm)
Weight.....33 1/2 in. (85.09 cm)
Height .....10 3/4 in. (27.31 cm)
120 gallon fog oil tank:
Weight..... 199 lb (90.26 kg)
Length..... 58 1/4 in. (147.96 cm)
Width .....30 in. (76.20 cm)
Height .... 32 1/16 in. (81.32 cm)
80 gallon fog oil tank:
weight.....182 lb (82.73 kg)
Length .....58.25 in. (147.96 cm)
Width .....30.00 in. (76.20 cm)
Height .....26.63 in. (67.64 cm)

Classification and Rating:

Fog oil consumption
nominal) ..... 40 gal/h (151.41 liter/h)
Fog oil flow variable . . . . . 30 gal/h to 55 gal/h
(113.5 liter/h to 208 liter/h)
Fuel consumption (nominal) 3 gal/h (1.36 liter/h)
Temperature range . . . . . -25°F to 140°F

Refemces:

TM 3-1040-279-12&P
TM 43-0002-31
TM 3-1040-280-20&P
TM 9-2350-261-20-1

LAUNCHER, GRENADE, SMOKE: SCREENING, RP, M239

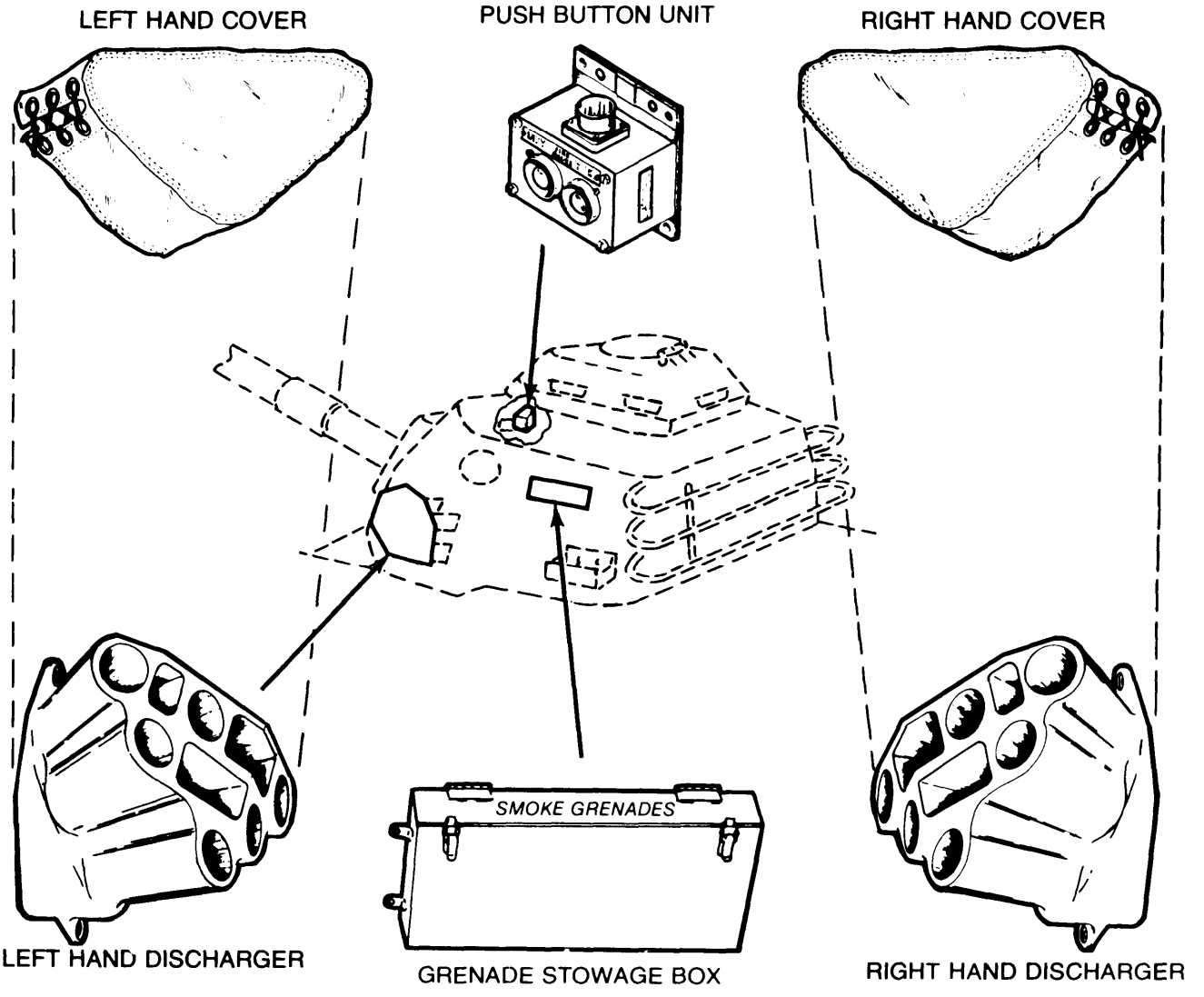

M239 LAUNCHER MOUNTED ON M60 SERIES TANK TURRET

Type Classification:

STD (LCC-A); MSR 0776609

Use:

To project smoke grenades from a combat vehicle to screen it from enemy view.

Description:

The M239 smoke grenade launcher consists of two smoke grenade dischargers (one right hand and one left hand) with canvas covers, a pushbutton firing unit, and two ammunition stowage boxes. Each discharger is a six-barreled aluminum casting about 10 inches high, 15 inches wide, and 18 inches deep. When mounted, the dischargers are positioned to launch the grenades to form an arc forward of the tank's turret. One discharger is bolted to a bracket that is mounted on the left outside of the tank turret, the other to the right. The two canvas covers (one right hand and one left hand) are used to cover the dischargers. The smoke discharger pushbutton unit, mounted inside the tank turret, has two pushbutton firing switches. The ammunition stowage boxes are attached outside the tank turret. One box is bolted to the left rear side of the turret, the other to the right. Each box holds six grenades (one reload for each discharger).

Functioning:

The smoke grenade fired from this launcher is the GRENADE, MUNCHER, SMOKE: Screening, RP, UK L8A1. Six grenades are muzzle-loaded into the barrels of each discharger from outside the tank turret. A spring

clip in the grenade base engages a bulb-shaped pin on the end of a jack connector in the bottom center of the discharger barrel. Pressing one of two switches on the pushbutton unit closes the electrical circuit to three grenades in each discharger and fires a salvo of six grenades. Pressing both buttons launches a salvo of twelve grenades. The grenades airburst to produce a white smoke.

Tabulated Data:

NSN 1040-01-015-0874
Line item number L44612
Unit of issue . . . . Each
Basis of issue . . . . TTDAMTOE/TDA
Discharger (right hand or left hand):
Capacity . . . .6 grenades
Height . . . .11 in.
Width . . . .12 in.
Depth . . . .16 in.
Weight . . . .33 lb
Pushbutton unit:
Height . . . . . 2.75 in.
Width . . . . . .3.5 in.
Depth . . . .3.25 in.
Weight . . . . . 1.3 lb
Grenade stowage box:
Capacity . . . . . .6 grenades
Height . . . .9 in.
Width . . . . . .22 in.
Depth . . . .5 in.
Weight . . . . . 38.5 lb
UK L8A1 grenade:
DODAC 1330-G815
Fuze type . . . . Electrical igniting (squib)

Performance (Launcher and Grenades):

Salvos . . . . Two salvos of six grenades each or one salvo of 12 grenades
Range . . . .20-50 meters

Shipping and Storage Data:

Packing . . . . Fiberboard boxes in a wooden box
Weight . . . .220 lb
Cube . . . . . .6.0 cu ft
Drawing number 13-12-32

References:

TM 3-1040-266-20&P
TM 9-2300-378-20 P/2-1;-20 P/2-2;-35/1;-35/2; -35 P/2-1;-35P/2-2
TM 9-2350-21 5-10;-20;-50
TM 9-2350-222-10;-20
TM 9-2350-256-10;-20;-20P;-34/1;-34P/1
TM 9-2350-257-10-2;-20-2;-20 P-2; -34-2;-34P-2
TM 43-0001-29

LAUNCHER AND GRENADES, SMOKE: HC AND WP, M176

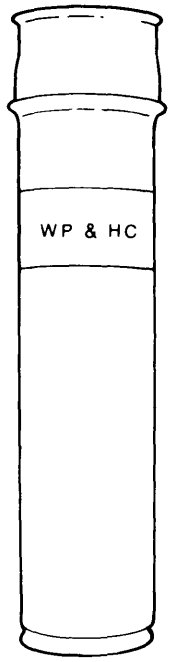

Type Classification:
STD (LCC-A)MSR01736009

Use:
The M176 grenade launcher provides a smoke screen for concealing tactical maneuvers of a vehicle.

Description:
The M176 grenade launcher consists of a cylindrical plastic tube which houses one M225 cartridge, and a two-piece sabot assembly which contains one M34 WP- filled smoke grenade and one AN-M8 HC-filled smoke grenade. The bursting and incendiary action of the M34 WP grenade provides secondary capability of producing casualties.

Functioning:
When the M176 grenade launcher is fired, the firing pin strikes the M225 cartridge percussion primer, which ignites the propellant charge in the M225 cartridge. Gas which is formed in the sealed projector base cavity ejects the sabot assembly and grenade through the end of the cap. Then the sabot assembly cover and holder separate and allow the grenade fuzes to function.

Tabulated Data:

NSN 1330-00-930-8945 H050
Line item number L43899
Unit of issue . . . .EA
Basis of issue . . . . . .
M176 Grenade Launcher:
Length . . . .15 in. (38.10 cm)
Diameter . . . . . 3 11/16 in. (9.37 cm)
Weight . . . . . 5.10 lb(2,315 grams)
Range . . . .31 to 46 meters
AN-M8 HC Grenade:
Diameter . . . . . 2 1/20 in. (6.35 cm)
Height . . . .4 1/2 in. (11.43 cm)
Weight . . . . . 1 1/2 lb(680 grams)
Fuze M201A1
Fuze delay time . . . . . 1.2 t0 2 seconds
Burning time . . . . . 105 to 150 seconds
M34 WP Grenade:
Diameter . . . . . 2 3/8 in. (6.03 cm)
Height . . . .5 1/2 in. (13.97 cm)
Weight . . . . . 1 1/2 lb(680 grams)
Fuze M206A2
Fuze delay time . . . .4 t0 5 seconds
Burning time . . . . 10 to 20 seconds

M225 Cartridge:

Diameter . . . . . 2 3/32 in. (1.83 cm)
Length . . . .7/8 in. (2.22 cm)
Weight . . . . . 3 oz(8.50grams)
Primer percussion M29A1
Propellant (BKNO~) weight . . . . . 0.052 oz (1.49 grams)

Marking:

M176 Grenade Launcher. The tube of the M176 grenade launcher is painted olive drab, and has one yellow band and one light green band.WP and HC are marked in red on the light green band. GRENADE LAUNCHER M176 and LOT NO. are marked in red on the tube.

Shipping Box.The shipping box is color coded on two diagonally opposite edges. Yellow identifies high-explosive ammunition, light green identifies smoke ammunition, and light red identifies incendiary ammunition.

Shipping and Storage Data:

Chemical munition storage group C
Storage hazard class 3
Storage compatibility group . . . . . A

Reference:

TM 3-1330-203-10

LAUNCHER, PROJECTILE, LIQUID, AIRBURST: M267

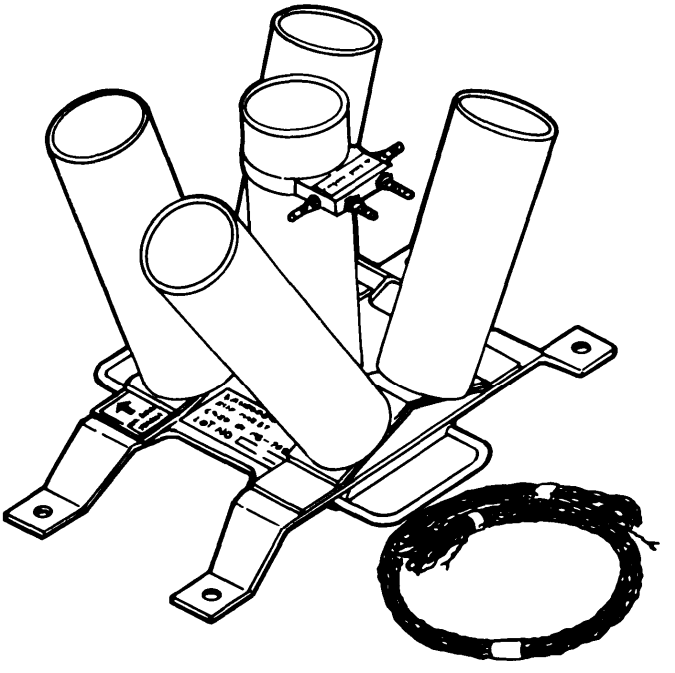

Type Classification:
STD (LCC-A)MSR09846004

Use:
To launch the Simulator, Projectile, Airburst, Liquid: M11 (SPAL) which will simulate a chemical artillery air'-burst attack.

Description:
The M267 liquid airburst projectile launcher consists of five plastic tubes individually bolted at different angles to an aluminum platform. The launcher fires five simulant-filled bottle assemblies (SPAL) to produce a simulated contamination area at least 75 meters (246 ft) wide by 75 meters long downwind from the launch site, depending on wind velocity. The lightweight compactness makes the launcher easily transportable using the "D" handle provided on the ends of the launcher platform.

Functioning:
The five launching tubes are fitted at different angles to produce a mortar- like line source platform of projectiles at equal distances apart. Each tube will contain plastic bottle filled agent simulant with an obturator and explosive housing assembly. Then these are connected to the electrical connector side connectors. Then the firing line is connected to the electrical connector front connector with blasting cap test set. On applying electrical current to the firing line, current flows through the leads to the electrical connector. The electrical match ignites the expulsion charge, which in turn ignites the delay. The gases from the expulsion charge propel the filled bottles into the air. The delay, after burning for approximately two seconds, initiates the blasting cap, which detonates the burster charge. This ruptures the bottle to produce a cloud of spray at a height of 15 to 40 meters. The simulated area of contamination extends at least 75 meters wide and 75 meters downwind from the point of burst, depending on wind velocity.

Tabulated *Data:*
NSN 6920-01-110-7680
Line item number L24961
Unit of issue . . . .EA
Basis of issue . . . . . TOE/MTOE/TDA

Wejghts and Dimensions:
Height . . . . . .15 in.(38.10cm)
Width . . . . . .12 in.(30.48cm)
Length . . . . . 20 in.(50.80cm)
Weight . . . . 15.8 lb(6.84kg)

Packaging Data:
Container (wood box):
Height . . . .12 in. (30.48cm)
Width . . . . . 15 in.(38.10cm)
Length . . . .24 1/2 in. (62.23 cm)
Weight . . . .42 lb(19.05 kg)

Effective Range Downwind Coverage (forSPAL)
Depending onWind Velocity:.
Width . . . . . .246 ft (75 meters)
Length . . . .485 to 1,477 ft (15 to 450 meters)

Shippjng and Storage Data:
Packing . . . . . .
Weight . . . . . .
cube . . . . . .
Drawing number . . . . . .

Reference:
TM 3-6920-100-12&P

LAUNCHER AND GRENADES, SMOKE: HC, M226

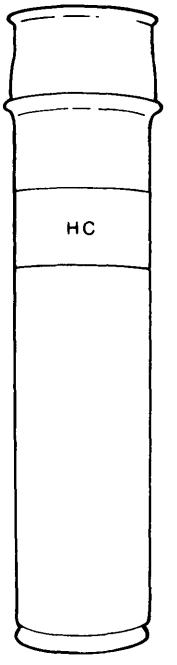

Type Classification:

STD (LCC-B) MSR01736009

Use:

The M226 grenade launcher provides a smoke screen for concealing tactical maneuvers of a vehicle.

Description:

The M226 grenade launcher consists of a cylindrical plastic tube which houses one M225 cartridge, and a two-piece sabot assembly which contains two AN-M8 HC- filled smoke grenades.

Functioning:

When the M226 grenade launcher is fired, the firing pin strikes the M225 cartridge percussion primer, which ignites the propellant charge in the M225 cartridge. Gas which is formed in the sealed projector base cavity ejects the sabot assembly and grenades through the end of the cap. The sabot assembly cover and holder separate and allow the grenade fuzes to function.

Tabulated Data:

M226 Grenade Launcher:

Length . . . . . 14.99 in. (38.10 cm)
Diameter . . . . . .3.69 in. (9.37 cm)
Weight . . . . . 82.6451b (2,31 5 grams)
Range . . . .102 .24 to 150.9 ft (31 to 46 meters)

AN-M8 HC Grenade:

Diameter . . . . . .2.50 in. (6.35 cm)
Height . . . . . 4.50 in. (11.43 cm)
Weight . . . .23.98 lb(680 grams)
Fuze M201A1
Fuze delay time . . . . . 1.2 t0 2 seconds
Burning time . . . . . 105 to 150 seconds

M225 Cartridge:

Diameter . . . . . 0.72 in. (1.83 cm)
Length . . . .87 in. (2.22 cm)
Weight . . . . . 0.299 lb(8.50 grams)
Primer Percussion M29A1
Propellant ($BKNO_3$) weight. . . . .0.052 lb (1.49 grams)

Shipping and Storage Data:

Packing . . . . . .three-piece plastic foam box
Container . . . . . .1 each
Grenade launchers per box 8
Weight . . . . . .62 lbs (21.867 grams)
Dimensions . . . . . 1.7 cu ft(0.048cu m)
CLOG . . . . . para 36b(11)
SIN: E3540200M24

Storage compatibility group..... . . . . A
Chemical group 6
Storage hazard class 3
DOT hazard classification . . . . . Explosive, Class B
DOT marking . . . . . Special Fireworks, Handle Carefully, Keep Fire Away

Reference:

TM3-1330-208-10

LAUNCHER, GRENADE, SMOKE: SCREENING, RP, M243

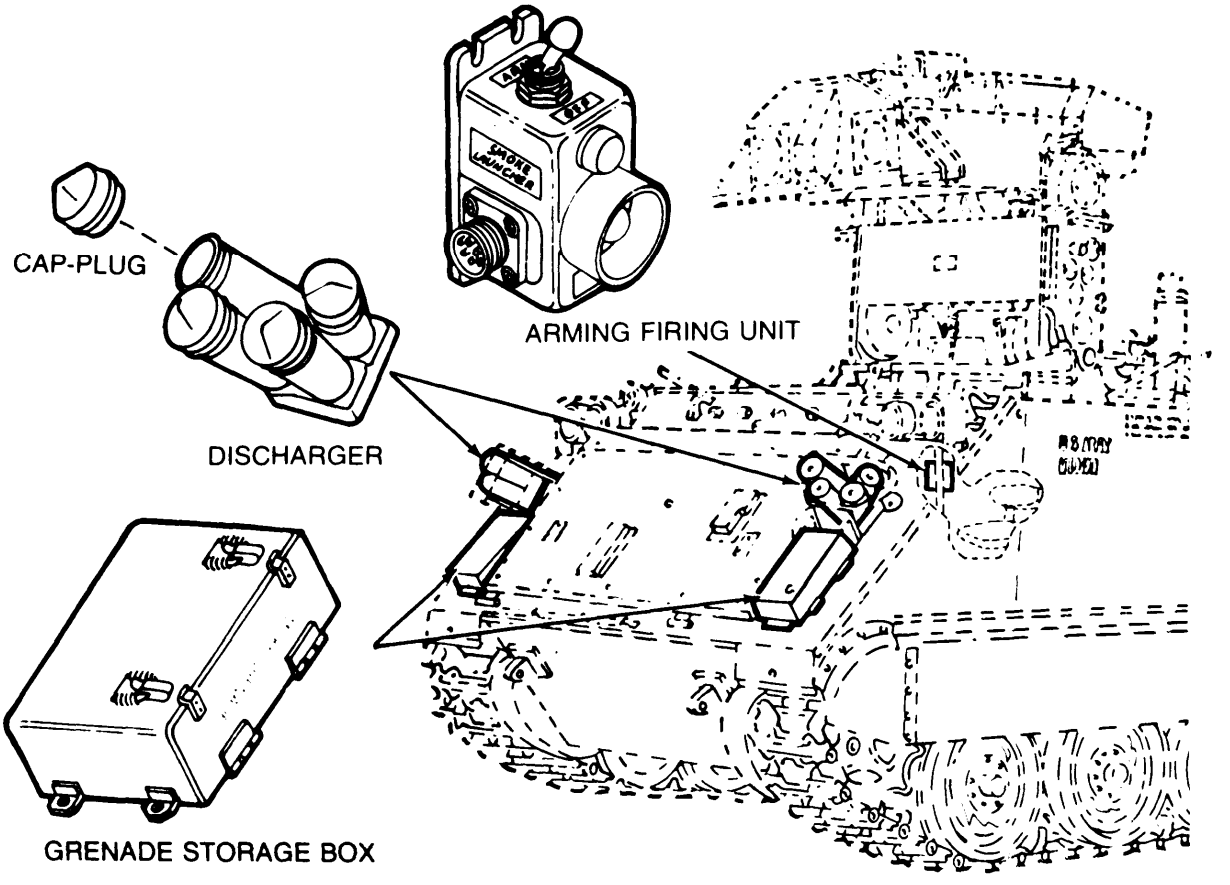

M243 SMOKE GRENADE LAUNCHER
MOUNTED ON M901 ANTI-TANK COMBAT VEHICLE

Type Classification:

STD (LCC-A); MSR 11796017

Use:

To project smoke grenades from a combat vehicle to screen it from enemy view,

Description:

The M243 smoke grenade launcher consists of a pair of 4 tube dischargers, eight rubber cap-plugs (one for each tube), two smoke grenade storage boxes (vehicle accessories boxes), and an arming firing unit. Each discharger has an aluminum base and four aluminum tubes. The dischargers are mounted with the tubes positioned to launch the grenades to form an arc forward of the vehicle. The caps are used to cover the discharger tubes. Each storage box is mounted under a discharger and holds four grenades. The arming firing unit is positioned within close reach of the tactical vehicle commander or gunner.

Functioning:

The smoke grenade fired from this launcher is the GRENADE, LAUNCHER, SMOKE: Screening, RP, UK L8A1. Four grenades are muzzle-loaded into the tubes of each discharger from outside the vehicle. A spring clip in the grenade base engages a bulb-shaped pin on the end of the electrical contact assembly in the bottom

center of the discharger tube. Moving the toggle switch on the arming firing unit from OFF to ARM closes the electrical circuit between it and the vehicle's power supply. Pressing the FIRE button on the fire switch assembly of the arming firing unit closes the electrical circuit to the dischargers and launches a salvo of eight grenades. The grenades airburst to produce a white smoke.

Tabulated Data:

NSN 1040-01-059-0560
Line item number L67021
Unit of issue . . . . Each
Basis of issue . . . . TOE/MTOE/TDA
Discharger:
Capacity . . . .4 grenades each
Base . . . . 6 x 6 x 2 in.
Tubes . . . .4 tubes; 7-1/8 in. long, 3 in. OD, 2-5/8 in. ID
Height . . . .9.5 in.
Width . . . .11.5 in.
Depth . . . . . 6.31 in.
Weight . . . . . 11.2 lb
Arming firing unit:
Height . . . .5.43 in.
Width . . . .3.06 in.
Depth . . . .3.27 in.
Weight . . . .1 lb
Grenade storage box:
Height . . . .9in.
Length . . . .15.75 in.
Width . . . .4.25 in.
Weight . . . .30 lb
UK L8A1 smoke grenade:
DODAC 1330-G815
Fuze type . . . . Electrical igniting (squib)

Performance (Launcher and Grenades):

Salvos . . . .One salvo of 8 grenades
Range . . . .20-50 meters

Shipping and Storage Data:

Packing . . . . . Fiberboard boxes in a wooden box
Weight . . . .118 lb
Cube . . . . . .4.4 cu ft
Drawing number 13-12-80

References:

TM 9-1040-267-20&P
TM 9-2350-259-10
TM 9-2350-259-20
TM 43-0001-29

LAUNCHER, GRENADE, SMOKE: SCREENING, RP, M250

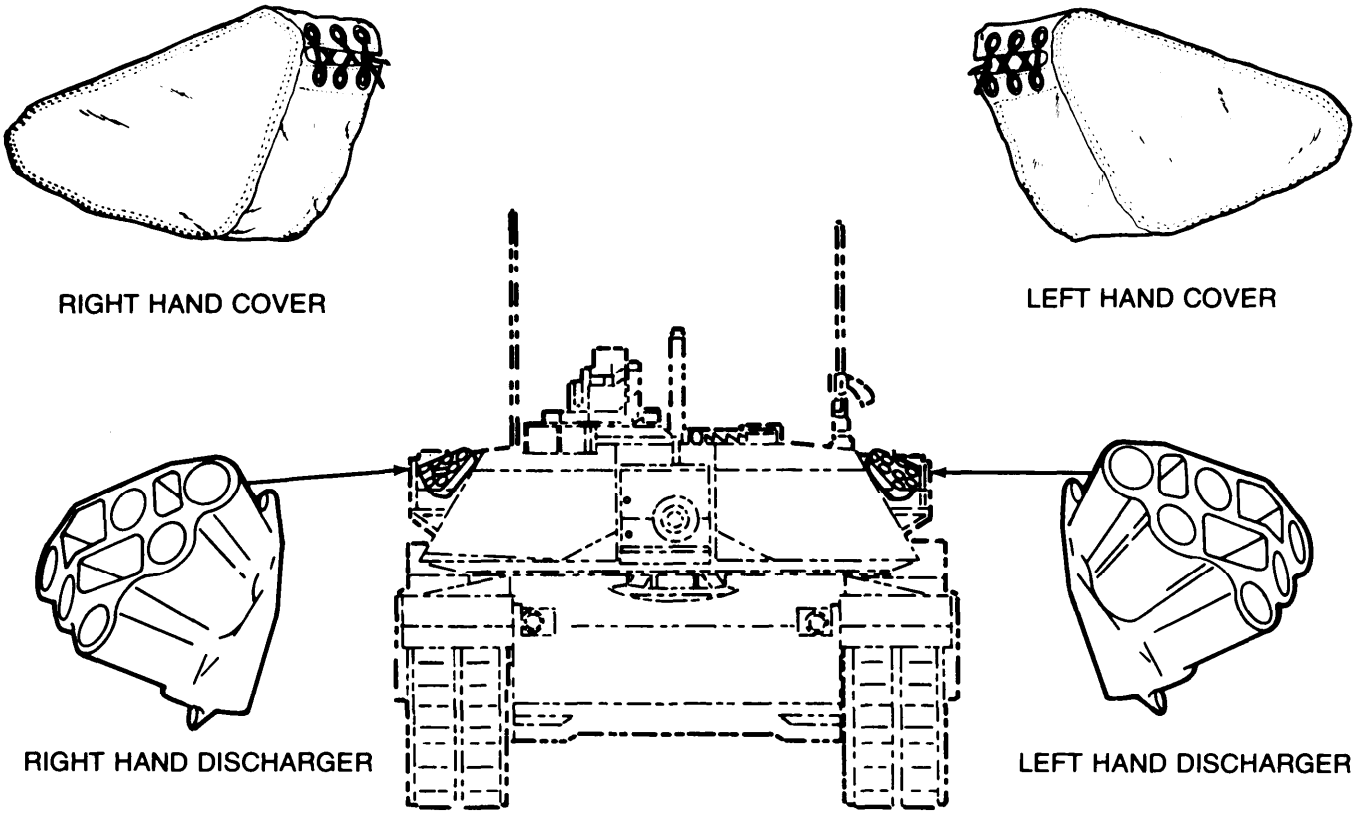

M250 SMOKE GRENADE LAUNCHER
MOUNTED ON M1 COMBAT TANK

Type Classification:
STD (LCC-A); MSR 07796010

Use:
To project smoke grenades from a combat vehicle to screen it from enemy view.

Description:
The M250 smoke grenade launcher consists of two smoke grenade dischargers (one right hand and one left hand) with canvas covers. Each discharger is a six-barrel aluminum casting about 10 inches high, 15 inches wide, and 18 inches deep. When mounted, the dischargers are positioned to launch the grenades to form an arc forward of the tank's turret. One discharger is bolted to a bracket that is mounted outside of the tank turret, one on the left and the other to the right. The two canvas covers (one right hand and one left hand) are used to cover the dischargers.

Functioning:
The smoke grenade fired from this launcher is the GRENADE, LAUNCHER, SMOKE: Screening, RP, UK L8A1. Six grenades are muzzle-loaded into the barrels of each discharger from outside the tank turret. A spring clip in the grenade base engages a bulb-shaped pin on the end of a jack connector in the bottom center of the discharger barrel. Pressing one of two fire switches in the tank turret closes the electrical circuit to the dischargers and launches a salvo of six grenades (three from each discharger). Pressing both switches launches a salvo of twelve grenades. The grenades airburst to produce a white smoke.

Tabulated Data:

NSN 1040-00-000-0138
Line item number L44680
Unit of issue . . . . Each
Basis of issue . . . . TOE/MTOE/TDA
Discharger (right or left):
- Capacity . . . . . 6 grenades
- Height . . . .11 in.
- Width . . . .12 in.
- Depth . . . .16 in.

Weight . . . .33 lb
UK L8A1 smoke grenade:
DODAC 1330-G815
Fuze type . . . . Electrical igniting integral squib

Performance (Launcher and Grenades):
Salvos . . . . Two salvos of six grenades each or one salvo of twelve grenades
Range . . . .20 to 50 meters

Shipping and Storage Data:
Packing . . . . . Fiberboard boxes in a wooden box
Weight . . . .102 lb
Cube . . . . . .4.5 cu ft
Drawing number 13-12-122

References:
TM 3-1040-268-20&P
TM 9-2350-255-10,-20
TM 43-0001-29

LAUNCHER, GRENADE, SMOKE: SCREENING, RP, M257

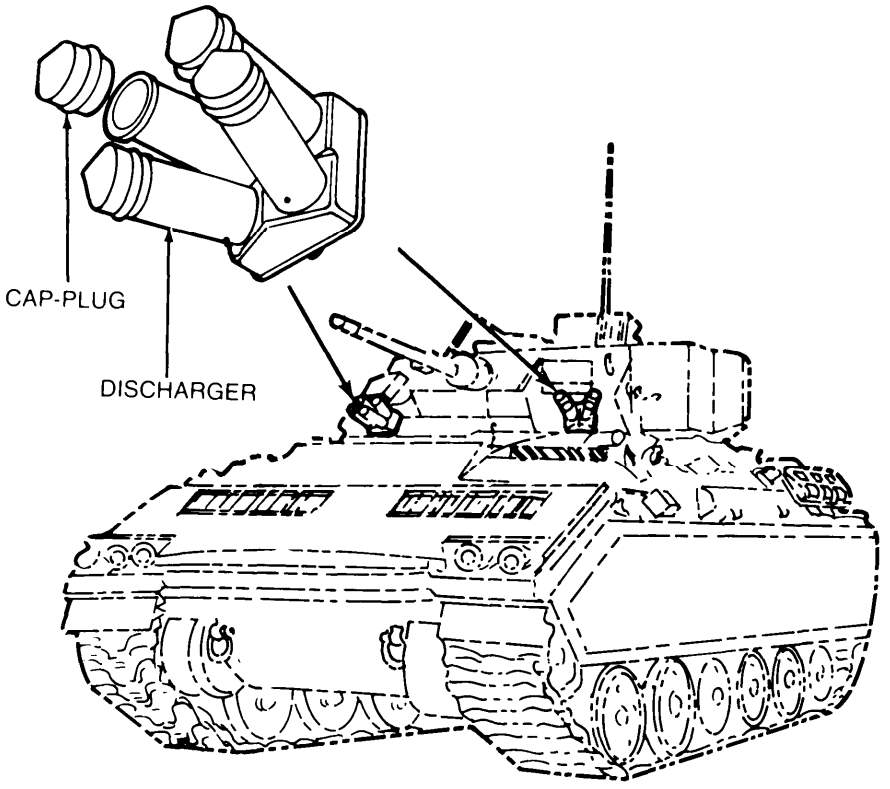

M257 SMOKE GRENADE LAUNCHER MOUNTED
ON M2 OR M3 FIGHTING VEHICLE

Type Classification:

STD (LCC-A); MSR 05806016

Use:

To project smoke grenades from a combat vehicle to screen it from enemy view.

Description:

The M257 smoke grenade launcher consists of a pair of 4-tube dischargers and eight rubber cap-plugs, one for each tube. Each discharger has an aluminum base and four aluminum tubes. The dischargers are mounted with the tubes positioned to launch the grenades to form an arc forward of the vehicle. The cap-plugs are used to cover the discharger tubes.

Functioning:

The smoke grenade fired from this launcher is the GRENADE, LAUNCHER, SMOKE: Screening, RP, UK L8A1. Four grenades are muzzle-loaded into the tubes of each discharger from outside the vehicle. A spring clip in the grenade base engages a bulb- shaped pin on the end of the electrical contact assembly in the bottom center of the discharger tube, Pressing a smoke launcher fire switch in the vehicle closes the electrical circuit to the dischargers and launches a salvo of eight grenades. The grenades airburst to produce a white smoke.

Tabulated Data:

NSN 1040-01-070-1213
Line item number L44031
Unit of issue . . . . Each
Basis of issue . . . . . TOE/MTOE/TDA
Discharger:
Capacity . . . .4 grenades each
Base . . . . 6 x 6 x 2 in.
Tubes . . . .4 tubes; 7 1/8 in. long, 3 in. OD, 2 5/8 in. ID
Height . . . .9.5 in.
Width . . . .11.5 in.
Depth . . . .6.31 in.
Weight . . . .11.2 lb
UK L8A1 smoke grenade:
DODAC 1330-G815
Fuze Type . . . . Electrical igniting (squib)

Performance (Launcher and Grenades):

Salvos . . . .One salvo of 8 grenades

Range . . . .20-50 meters

Shipping and Storage Data:

Packing . . . . Fiberboard boxes in a wooden box

Weight . . . .40 lb

Cube . . . . . .1.8 cu ft

Drawing number 13-12-129

References:

TM 43-0001-29

TM 9-1040-267-20&P

LAUNCHER, GRENADE, SMOKE: SCREENING, RP, M259

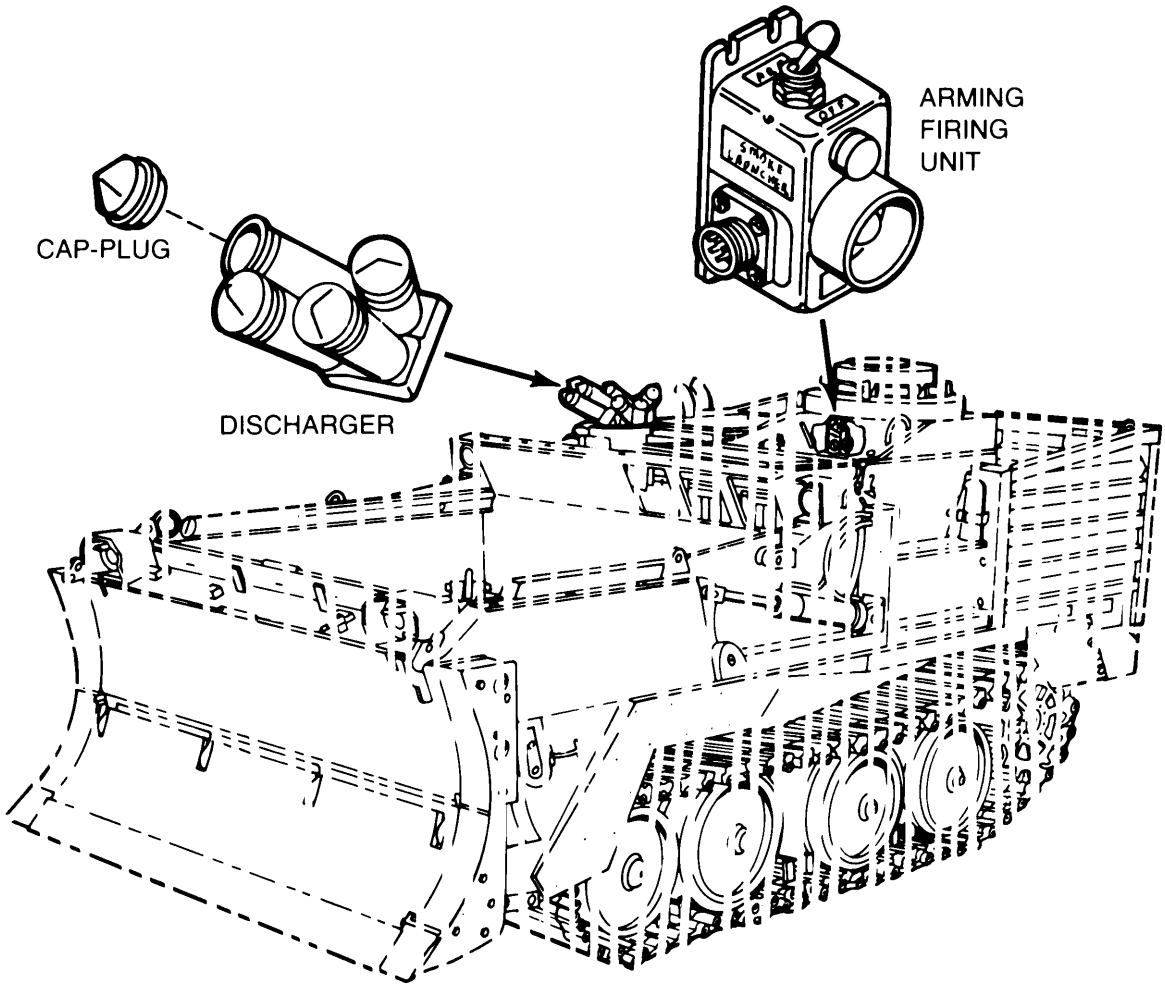

M259 SMOKE GRENADE LAUNCHER
MOUNTED ON M9 ARMORED COMBAT EARTHMOVER

Type Classification:

STD(LCC-A); MSR 02826016

Use:

To project smoke grenades from a combat vehicle to screen it from enemy view.

Description:

The M259 smoke grenade launcher consists of a pair of 4-tube dischargers, eight rubber cap-plugs (one for each tube), and an arming firing unit. Each discharger has an aluminum base and four aluminum tubes. The dischargers are mounted with the tubes positioned to launch the grenades to form an arc forward of the vehicle. The cap-plugs are used to cover the discharger tubes. The arming firing unit is positioned within close reach of the tactical vehicle commander or gunner.

Functioning:

The smoke grenade fired from this launcher is the GRENADE,LAUNCHER, SMOKE:Screening, RP, UK L8A1. Four grenades are muzzle-loaded into the tubes of each discharger from outside the vehicle. A spring clip in the grenade base engages a bulb-shaped pin on the end of the electrical contact assembly in the bottom center of the discharger tube. Moving the toggle switch on the arming firing unit from OFF to ARM closes the electrical circuit between it and the vehicle's power supply. Pressing the FIRE button on the fire switch asembly of the arming firing unit closes the electrical circuit to the dischargers and launches a salvo of eight grenades. The grenades airburst to produce a white smoke.

Tabulated Data:

NSN 1040-01-107-7501

Line item number Z37754
Unit of issue . . . . Each
Basis of issue . . . .TOE/MTOE/TDA
Discharger:
Capacity . . . .4 grenades each
Base . . . .6 x 6 x 2in.
Tubes . . . .4 tubes;7-1/8 in. long, 3 in. OD,2-5/8 in. ID
Height . . . . . .9.5 in.
Width . . . .11.5 in.
Depth . . . .6.31 in.
Weight . . . . . 11.2 lb
Arming firing unit:
Height . . . . . .5.43 in.
Width . . . .3.06 in.
Depth . . . .3.27 in.
Weight . . . .1 lb

UK L8A1 smoke grenade:
Fuze type . . . . Electrical igniting (squib)

Performance (Launcher and Grenades):
Salvos . . . .One salvo of 8 grenades
Range . . . .20-50 meters

Shipping and Storage Data:
Packing . . . . Fiberboard boxes in a wooden box
Weight . . . .42 lb
Cube . . . .1.9 cu ft
Drawing number 13-12-150

References:
TM 9-1040-267-20&P
TM 43-0002-31

MOUNT, FOG OIL DRUM: M3

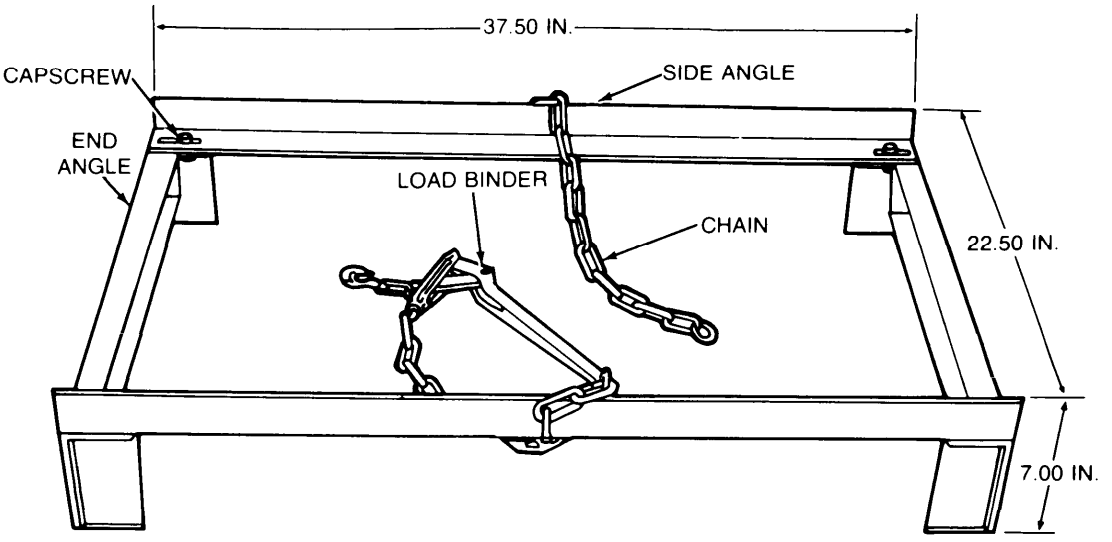

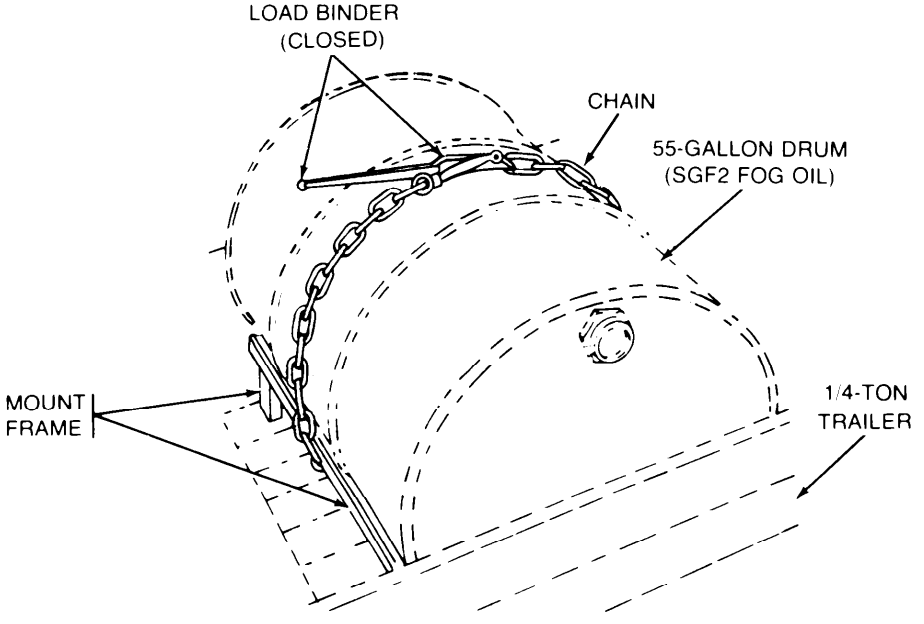

Type Classification:

STD (LCC-A); CCTC 319756

Use:

To mount and transport a 55-gallon drum of fog oil in a 1/4-ton cargo trailer in support of smoke generator operations.

Description:

The M3 fog oil drum mount consists of a rectangular steel frame, chains, and a load binder. The frame is made of two side angles and two end angles held together with four capscrews, washers, and nuts. Connetting links are used to fasten the chains to center lugs on the side angle and to fasten the load binder on the other end of one of the chains. Eight additional capscrews, washers, and nuts are provided to fasten the assembled mount to the floor of the trailer.

Functioning:

The M3 fog oil drum mount is assembled, positioned and fastened crosswise on the trailer floor using capscrews to hold the mount in place. An empty 55-gallon drum is placed on its side, lengthwise on the mount. The drum is secured on the mount by connecting the load binder with the end of the other chain and closing the binder. The drum is then filled with fog oil pumped from another drum.

Tabulated Data:

NSN 1040-00-049-5462
Line item number M73933
Unit of issue . . . . Each
Basis of issue . . . . . TOE/MTOE/TDA
Weight . . . . . Not available
Length . . . .37.5 in.
Width . . . .22.5 in.
Height . . . .7in.

Shipping and Storage Data:

Packing . . . . Wooden box
Weight . . . .50 lb
Cube . . . . . .1.0 cu ft
Drawing number 31-16-17

References:

FM 3-50
TM 3-1040-202-12
TM 3-1040-255-10

MOUNT, SMOKE GENERATOR ASSEMBLY: M2

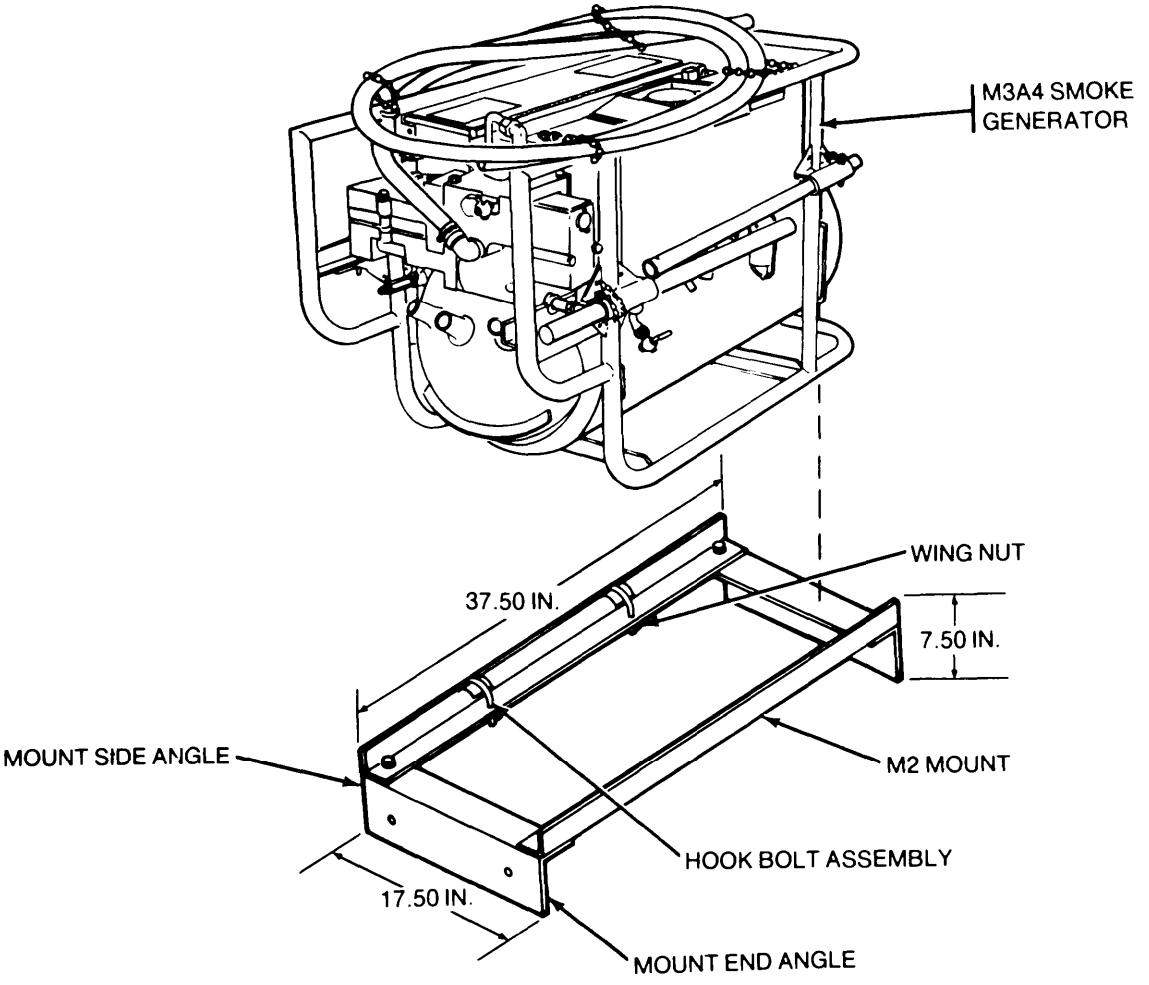

Type Classification:
STD(LCC-A);CCTC 341056

Use:
To mount and transpot an M3A3 or M3A4 smoke generator on a vehicle, trailer, or boat.

Description:
The M2 smoke generator mount assembly is a steel frame consisting of two mount side angles and two mount end angles bolted at the four comers with four capscrews, four lockwashers, and four nuts. Four hook bolt assemblies are secured to the two mount side angles with four lockwashers, four wing nuts, and four cotter pins. Separate instructions are provided for securing the M2 mount to the carrier.

Functioning:
The smoke generator is placed centrally on the M2 mount frame with the hook bolts loosened. The hook bolts are then placed on the smoke generator frame and wing nuts tightened to secure the smoke generata onto the mount.

Tabulated Data:

NSN 1040-00-347-2434
Line item number M74001
Unit of issue . . . .Each
Basis of issue . . . . . TOE/MTOE/TDA
(one per smoke generator)
Weight . . . .40 lb
Length . . . .37.50 in.
Width . . . .17.50 in.
Height . . . .7.50 in.

Shipping and Storage Data:

Packing . . . . . Wooden box
cube . . . .2 cu ft
Drawing number . . . . DL 31-16-10

References:

FM 3-50
TM 3-1040-202-12
TM 3-1040-255-10
TM 3-1040-270-10

MOUNTING KIT, SMOKE GENERATOR: M284

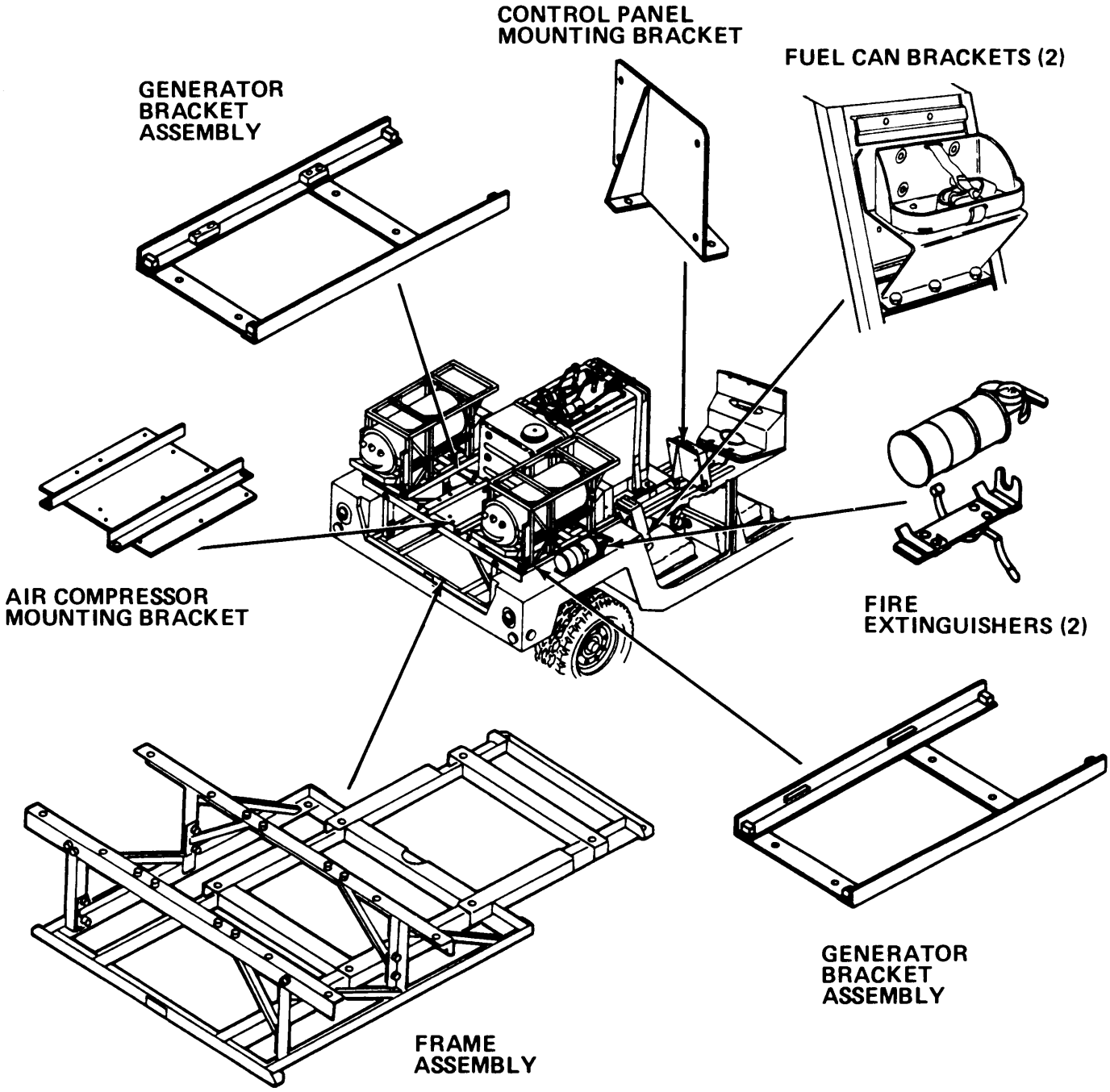

Type Classification:

STD (LCC-A); MSR 10876007

Use:

The M284 Smoke Generator Mounting Kit is used to mount the M157 smoke generator on the M998 or M1037 cargo/troop carrier.

Description:

The M284 mounting kit is designed to provide a means of transport and a mobile operating platform for the M157 smoke generator. The open-air design allows ease of access to equipment for operation and maintenance. Provisions are also made for transport and storage of fuel and fog oil for smoke

generator operation. The kit consists of a rigid frame assembly, two generator bracket assemblies, air compressor mounting bracket, control panel mounting bracket, two fuel can brackets, and two fire extinguishers.

Functioning:

The frame assembly is betted to an empty cargo bed (canvas top, doors, seats, etc. removed). Air compressor brackets and generator mounting brackets are bolted to the frame assembly. The fuel tank is betted to the frame and generator assemblies are fastened to mounting brackets by wedge-type clamps. The control panel mounting bracket is screwed to the cargo bed, angled toward the companion seat to allow access to controls and indicators. Fuel cans are mounted on brackets betted to each rear seat location. A five-pound fire extinguisher is mounted on bolted brackets at each rear wheel-house. The M157 smoke generator system is completed by connecting required hoses and electrical cable assemblies.

Tabulated Data:

NSN 1040-01-249-0272
Line item number M17931
Unit of issue ..... Each
Weight (frame assembly) ..... 304 lb
Dimensions
(frame assembly) . . . . . 86.75 x 64.50 x 17.00 in.

Shipping and Storage Data:

Instructions for administrative storage are provided in TM 3-1040-280-20&P.

Weight ..... 711 lb (crated)
Dimensions ..... 93.48 X 65.52x 26.64 in. (crated)

References:

TM 3-1040-280-20&P
TM 3-1040-279-12&P
TM 9-2320-280-20

SMOKE GENERATING SUBSYSTEM, HELICOPTER: M52

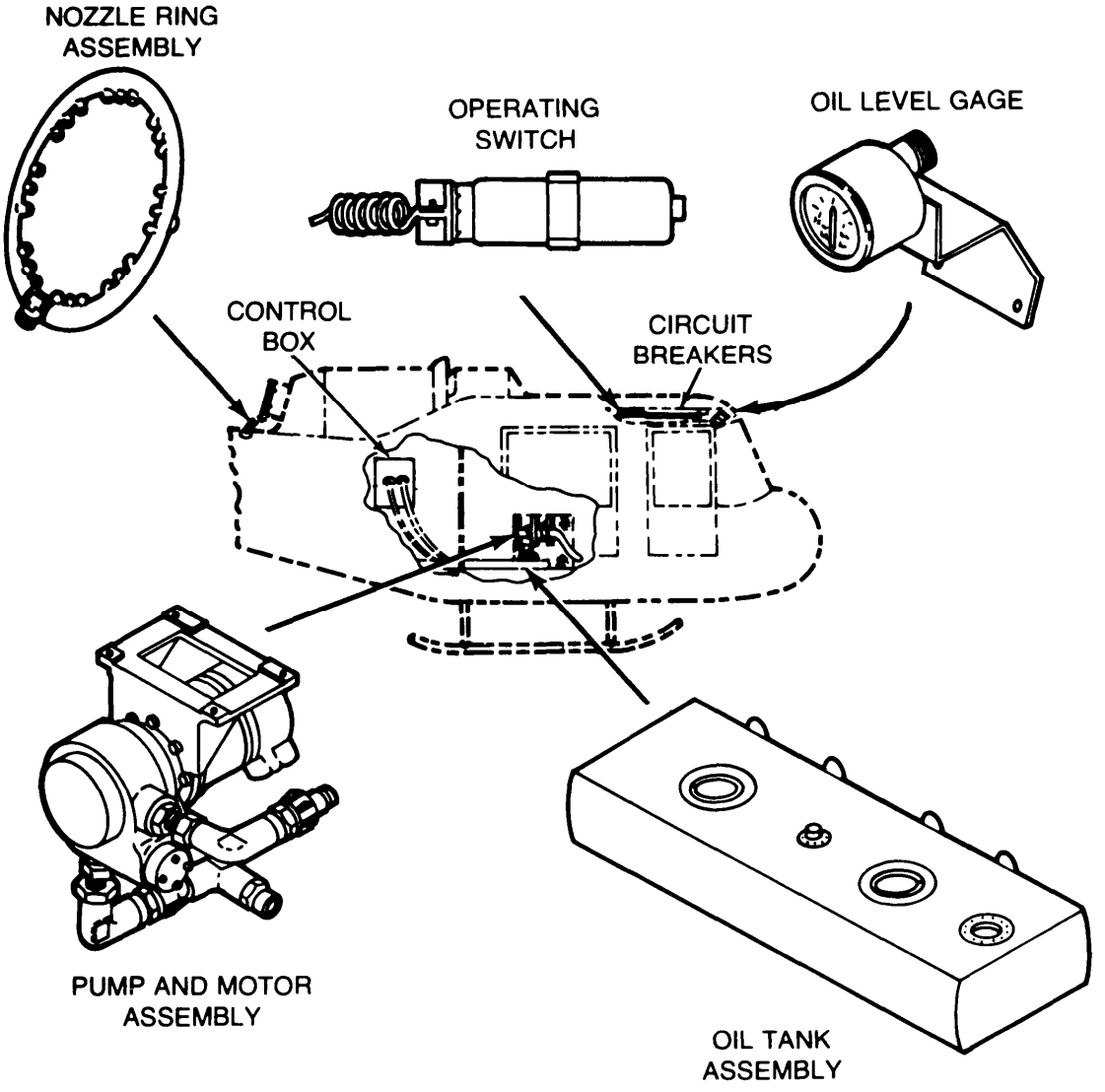

Type Classification:

STD (LCC-B); AMCTC 8469, 5 Apr 71

Use:

To provide a capability for utility helicopters to lay smoke screens in support of tactical operations.

Description:

The M52 smoke generating subsystem consists of an oil tank, a pump and motor, a nozzle-ring, an operating switch, and a fog oil level gage.

Functioning:

The amount of oil in the tank is indicated on the fog oil level gage mounted in the helicopter cockpit. The operating switch starts the pump and motor to pump fog oil through the system to the nozzle ring. The nozzle ring discharges atomized fog oil mist into the hot exhaust gases of the helicopter jet engine. A dense white smoke is formed which settles rapidly to the ground, when released at altitudes less than 50 feet (15 meters) and air speeds less than 90 knots. The length of time the smoke screen will obscure enemy vision depends on wind conditions and the altitude at which the smoke was released.

Tabulated Data:

NSN 1040-00-878-8132
Line item number T84368
Unit of issue . . . . Each

Basis of issue . . . . AR 310-34; MTOE/TDA

Oil tank:

Capacity . . . .50 gal

Length . . . . . 72 in.

Width . . . . . .17 in.

Height . . . .12 in.

Pump and motor:

Length . . . . . .11 in.

Width . . . . . .7.5 in.

Height . . . . . 8.5 in.

Weight . . . .24 lb

Smoke generating subsystem (installed):

Weight (empty) . . . .181 lb

Weight (with fog oil) . . . .555 lb

Performance:

Type of oil . . . . Fog oil, type SGF2, 55-gal drum

Oil consumption . . . .15 gal per min

Helicopter operating altitude . . . . . .50 ft (approx)

Smoke-screen capability (with a full tank of oil) . . . . . 200-second smoke emission for 7,000 meters (at helicopter groundspeed of 80 knots).

Operating power . . . . . 28 Vdc

Shipping and Storage Data:

Packaging . . . .1 wooden bx/3 (KITS A, B, and C which comprise the system are packaged separately and then packed together in a wood box).

Weight . . . .600 lb

Cube . . . . . .72 cu ft

Drawing number . . . . Bendix 53E00-73A

References:

MWO 55-1520-210-30/20 (Kit A)

TM 3-1040-253-13,-23P

TM 55-1520-210-20 (Kits B and C)

SMOKE POT: FLOATING, HC, M4A2

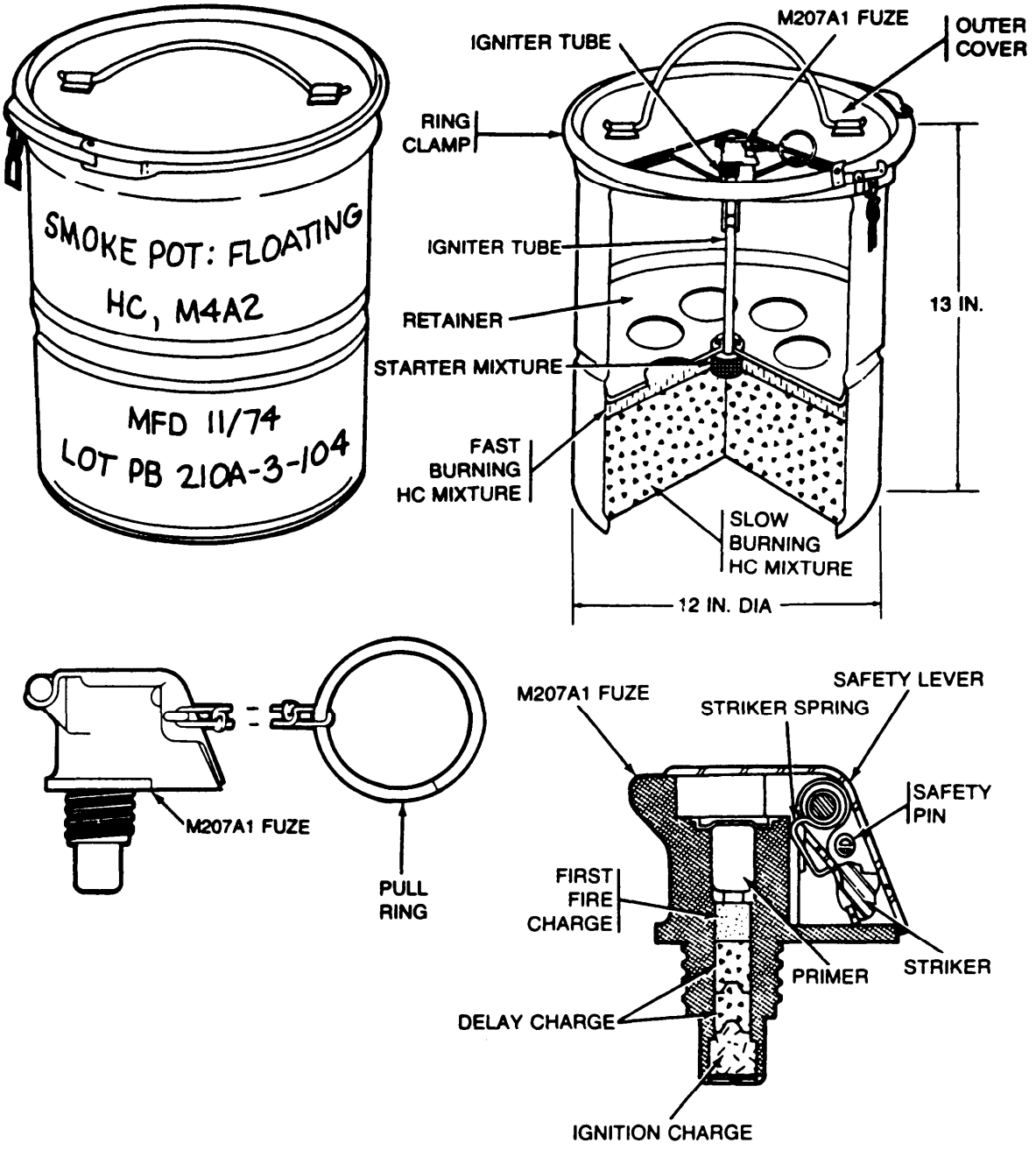

Type Classification:

STD(LCC-A); MSR 05756026

Use:

To generate screening smoke when a floating source of smoke is required for river crossings and beach landings. It can also be used on land.

Description:

The M4A2 HC floating smoke pot is a 5-gallon metal pail with its lower third filled with about 25 pounds of type-C, HC smoke mixture and fuzed with an M207A1 floating smoke pot fuze. The M207A1 fuze is a pyrotechnic, delay-igniting fuze.

Functioning:

Before the M4A2 smoke pot can be employed, the ring clamp and outer cover must be removed. The M207A1 fuze safety lever is held against the fuze body and the safety pin withdrawn by pulling the pull ring. The

pot is lifted by its handle and dropped into the water. The air chamber in the pot causes it to float. When the fuze safety lever is released, the striker spring drives the striker which hits the primer. The primer ignites the first-fire charge, which, in turn, ignites the delay charge. After about 2 seconds, the delay charge ignites the ignition charge thus completing the fuze action. Flame from the ignition charge travels through the pot's igniter tube to ignite the starter mixture, which then ignites the HC smoke-mixture filling. Pressure from the heat builds up inside the pot and blows off the adhesive tape covering the vents in the inner cover. Smoke particles escape through the vents to form a dense, white smoke cloud.

Limitations:

Breathing HC smoke can be injurious to the respiratory tract of exposed personnel. Personnel must wear respiratory protection (protective masks) whenever any exposure to HC smoke is anticipated. They must wash exposed skin with soap and water after handling HC smoke pots.

Tabulated Data:

NSN 1365-00-598-5220
Unit of issue . . . . Each
Basis of issue . . . . TAAMS
Weight . . . .38 lb
Height . . . .13 in.
Diameter . . . .12 in.
Filler:
Type . . . . Type-C HC smoke mixture
Weight . . . .25 lb

M207A1 Fuze:
Type . . . . . Mechanical/pyrotechnic delay-igniting
Delay time . . . .1.2 to 2 sec
Safety devices . . . . Pull ring, chain and safety pin

Performance:

Delay time . . . .10 to 20 seconds
Burning time . . . .10 to 15 min

Shipping and Storage Data:

Type pack . . . .1 per wood box or steel drum
Weight . . . .47 to 48 lb
Cube . . . .2 to 2.1 cu ft
Quantity-distance class 1.3
Storage comparability group . . . .G
DOT hazard classification . . . . . Class C explosive
DOT shipping name . . . . Smoke pots
DOT label . . . . . .Explosive C
UNO serial number 0016
DODAC 1365-K867
Drawing number 36-1-26

References:

FM 3-50
TB CML 100

SMOKE POT: FLOATING, SGF2, AN-M7A1

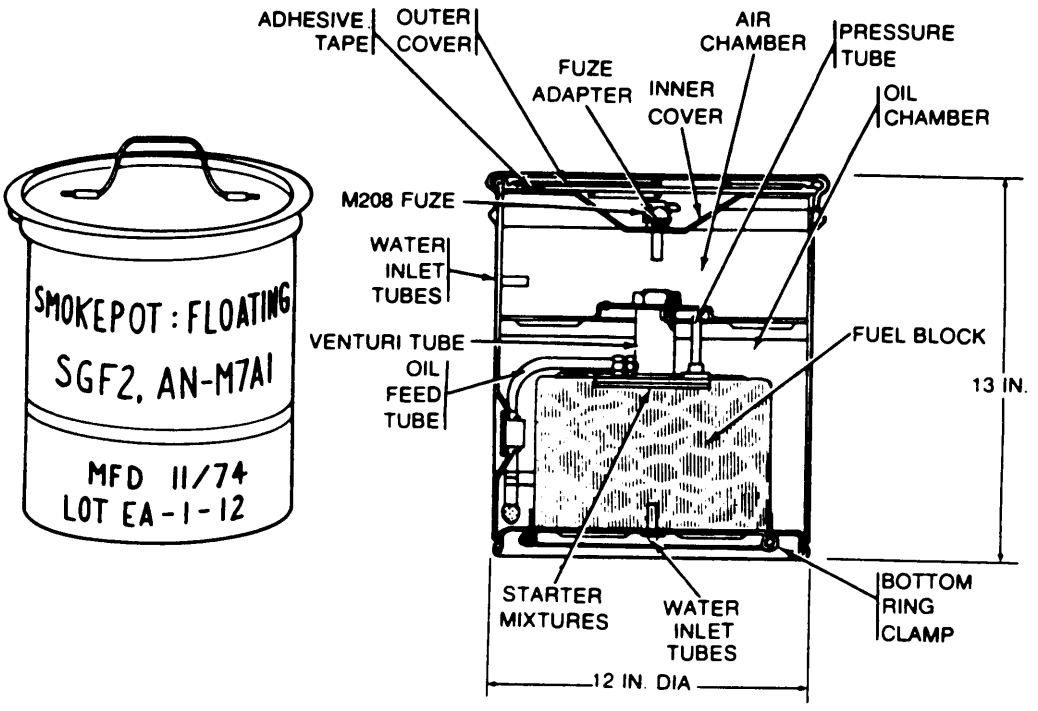

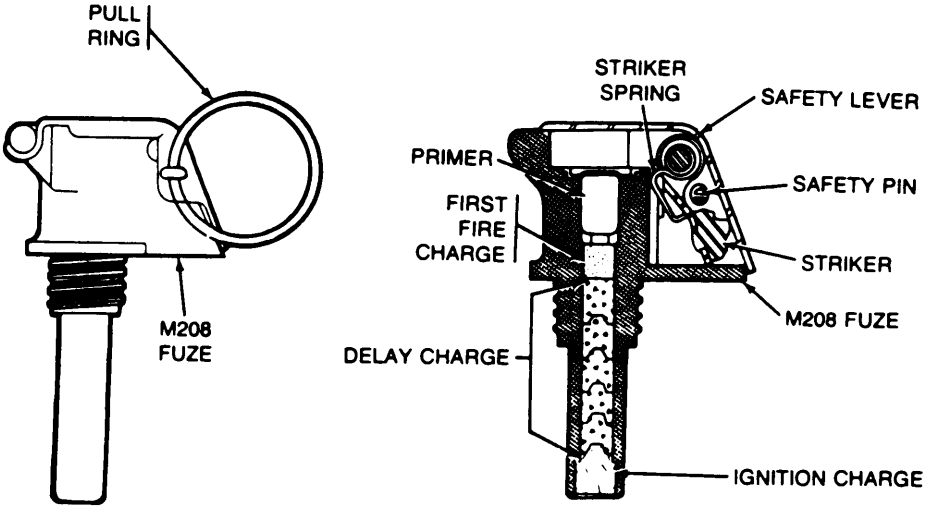

Type Classification:

STD (LCC-A); CCTC 4076 62

Use:

To generate screening smoke when a floating source of smoke is required for river crossings and beach landings. It can also be used on land.

Description:

The M7A1 SGF2 floating smoke pot is a 5-gallon metal pail filled with 13 pounds of SGF2 smoke-generator fog oil and fuzed with an M208 floating smoke pot fuze. The M208 floating smoke pot fuze is a pyrotechnic delay-igniting fuze.

Differences Between Models:

The M7A1 smoke pot has been issued in various configurations. The preferred configuration is NSN 1365-00-973-2459 with an M208 fuze. Another configuration formerly issued for Army use is NSN 1365-00-939-6599 with an M208 fuze plus one M209 fuze per ten smoke pots.

Functioning:

a. Before the M7A1 smoke pot can be employed, the ring clamp and outer cover must be removed. The M208 fuze safety lever is held against the fuze body and the safety pin withdrawn by pulling the pull ring. The pot is lifted by its handle and dropped into the water. The air chamber in the pot causes it to float. When the safety lever on the M208 fuze is released, the striker, driven by the striker spring, hits the primer which ignites. Flame from the primer travels through the first-fire charge and the delay charge and ignites the ignition charge. Flame from the fuze ignition charge passes down the venturi tube of the smoke pot and ignites the starter mixture, which ignites the fuel block. Hot gases from the burning fuel block pass upward through the venturi tube into the air chamber, melting solder seals in the pressure tube and venturi tube and building up pressure. The pressure is released through the pressure tube to force the oil in the oil chamber up the oil-feed tube into the venturi tube. The hot gases vaporize the oil, carry it into the air chamber, blow the tape from the three ventholes in the inner cover, and melt the solder from the sinkholes. As the vaporized oil escapes through the ventholes, it condenses to forma dense white smoke cloud. While the fuel block is burning, pressure inside the pot prevents water from entering through the sinkholes. When the fuel is consumed, pressure inside the pot falls, water enters through the sinkholes, and the pot sinks.

b. When a smoke line of M7A1 smoke pots must be remotely ignited all at once, the M209 electrical smoke pot fuze maybe used in lieu of the M208 fuze. The M209 fuze, now a separately issued item, is threaded to fit the fuze adapter on the inner cover of the M7A1 smoke pot. The fuze's lead wires are connected to a battery or blasting machine.

Limitations:

Fog oil smoke can be injurious to the respiratory tract of exposed personnel. Personnel should wear their protective masks in high concentrations of fog oil smoke.

Tabulated Data:

NSN 1365-00-973-2459
Unit of issue . . . . Each
Basis of issue . . . . TAAMS
Weight . . . . . 39 lb
Height . . . . . 13 in.
Diameter . . . . . 12 in.
Filler . . . . SGF2 fog oil
M208 fuze:
Type . . . . . Mechanical/ pyrotechnic delay igniting
Delay time . . . . . 8 to 20 sec
Safety devices . . . . . Pull ring and safety pin
M209 fuze:
Type . . . . . Electrical/ pyrotechnic igniting
DODAC 1365-K886
Type pack . . . .300 per wood box

Performance:

Delay time . . . . . 8 to 20 sec
Burning time . . . .8 to 13min

Shipping and Storage Data:

Type pack . . . . . Pail
Weight . . . . . 30 lb
cube . . . . . 2.0 cu ft
Quantity - distance class 1.3
Storage comparability group . . . .G
DOT hazard classification . . . . Class C explosive
DOT shipping name . . . . Smoke Pots
DODAC 1365-K869
Drawing number 36-1-118. 36-2-214

References:

FM 3-50
SC 1340/98-IL
TB CML 100

SMOKE POT: HC, 10-POUND, M1

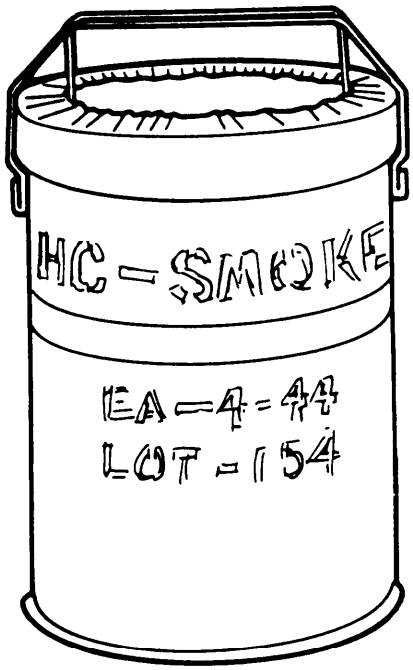

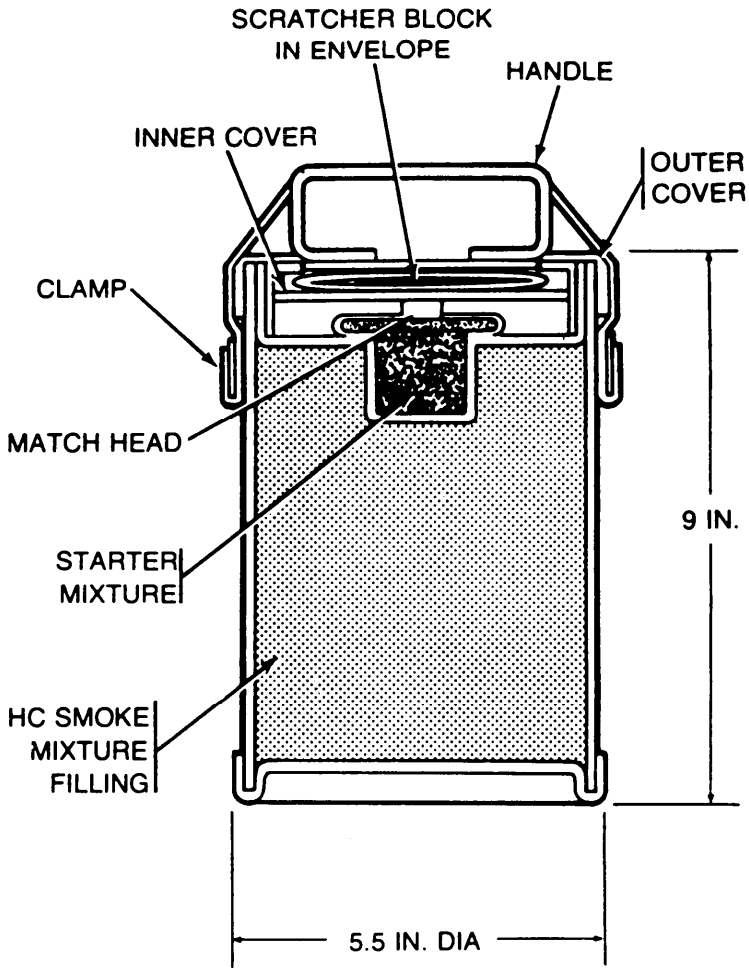

Type Classification:

CON (LCC-F); MSR 11756003

Use:

To produce screening smoke for training exercises and demonstrations, but can also be used in combat.

Description:

The M1 10-lb, HC smoke pot is a cylindrical sheet metal container filled with 10 pounds of type-C, HC smoke mixture and provided with an ignition device. A removable outer cover with a handle is clamped to the top of the pot by a metal clamp and is sealed with adhesive tape.

Functioning:

a. The outer cover on the M1 smoke pot must be removed before use. The M1 smoke pot can be ignited either manually by rubbing the scratcher block against the matchhead or electrically by using an electrical squib (not supplied) taped to the match-head. Flame from the matchhead ignites the starter mixture, which in turn ignites the HC smoke-mixture filling. After a delay of about 10 seconds, the smoke particles rise into the air reflecting light and forming a dense white cloud of smoke.

b. A chain of M1 smoke pots can be formed when a smoke screen of longer duration is needed. When the outer covers have been removed from the required number of pots, the pots can be stacked vertically or laid end-to-end horizontally. Initially, only one pot is ignited. As each pot bums through, it ignites the next pot.

Limitations:

The M1 smoke pot does not float on water. Breathing HC smoke can be injurious to the respiratory tract of exposed personnel. Personnel must wear respiratory protection (protective masks) whenever any exposure

to HC smoke is anticipated. They must wash exposed skin with soap and water after handling HC smoke pots.

Tabulated Data:

NSN 1365-00-219-8512
Unit of issue . . . . Each
Basis of issue . . . . TAAMS
Weight . . . . . 12.5 lb
Height . . . . . 9 in.
Diameter . . . .5.5 in.
Filler:
Type . . . . . Type-C HC smoke mixture
Weight . . . . . 10 lb
Ignition method . . . . Scratcher block and matchheador M1 flash-vented electric squib

Performance:

Delay time . . . . . .10 sec
Burning time . . . . . 5 to 8 min

Shipping and Storage Data:

Pack . . . . . .3 perwood box
Weight . . . . . 46 lb
cube . . . . 0.9 cu ft
Quantity-distance class 1.3
Storage comparability group . . . . G
DOT hazard classification . . . . Class C explosive
DOT designation . . . . Smoke pots
DOT label . . . . . .Explosive C
UNO serial number 0016
DODAC 1365-K865
Drawing number 36-1-51

References:

FM 3-50
SB 3-30-153
SC 1340/98-IL
TB CML 100

SMOKE POT: HC, 30-POUND, ABC-M5

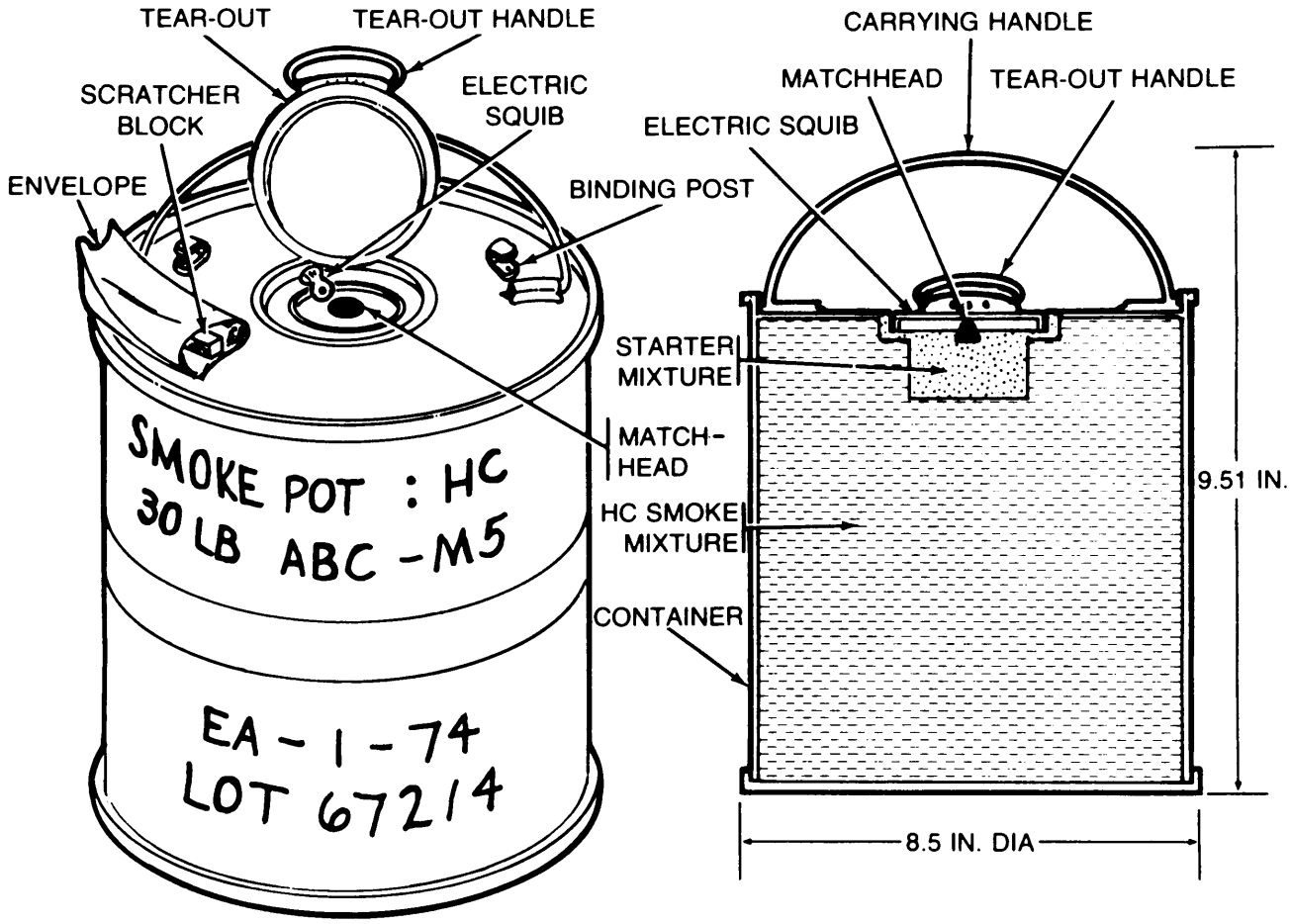

Type Classification:

STD (LCC-A); MSR 02828004

Use:

To produce screening smoke for training exercises and demonstrations, but can also be used in combat.

Description:

The ABC-M5 smoke pot is a cylindrical sheet-metal container, filled with about 30 pounds of slow-burning, type-C, HC smoke mixture and 1 pound of fast-burning, HC smoke mixture. A carrying handle is mounted on the outer cover,

Functioning:

a. ABC-M5 smoke pots can be ignited either singly or in multiples by remote electric ignition; or they can be ignited singly by using the scratcher block to ignite the matchhead. For electric ignition, wires from a battery or blasting machine are connected to the binding posts. When the electric circuit is closed, the squib ignites the matchhead which in turn ignites the starter mixture. The burning starter mixture ignites the HC filling, which generates sufficient heat to soften the solder holding the tear strip. Internal pressure blows off the tear strip allowing the smoke to escape into the air and form a dense white cloud. Pulling the tear-out handle upward and striking the scratcher block across the matchhead ignites a smoke pot manually. Flame from the matchhead travels to the starter mixture, which in turn ignites the HC filling. After a delay of 20 to 30 seconds, a dense, white smoke cloud is produced.

b. A chain of smoke pots is ignited manually by removing the tear-out strips from all pots then stacking the pots by fitting the bottom of one into the top of the next. When the stack is complete, the end pot is ignited using the scratcher block and matchhead method. As each pot burns through, it ignites the next pot.

Limitations:

The ABC-M5 smoke pot does not float on water. Breathing HC smoke can be injurious to the respiratory tract of exposed personnel. Personnel must wear respiratory protection (protective masks) whenever any exposure to HC smoke is anticipated. They must wash exposed skin with soap and water after handling HC smoke pots.

Tabulated Data:

NSN 1365-00-598-5207
Unit of issue . . . . Each
Basis of issue . . . . TAAMS
Weight . . . .33 lb
Height . . . .9.5 in.
Diameter . . . .8.5 in.
Filler:
Type . . . . Type-C HC smoke-mixture
Weight . . . . . 30 lb slow-burning and 1 lb fast-burning
Ignition method . . . . Flash-vented electric squibs or scratch block and match

Performance:

Delay time . . . . . 20 to 30sec
Burning time . . . .12 to 22 min

Shipping and Storage Data:

Type pack . . . .1 per wood box
Weight . . . . . 47 lb
cube . ...1.1 cu ft
Quantity - distance class 1.3
Storage comparability group . . . .G
DOT hazard classification . . . . . Class C explosive
DOT shipping name . . . . Smoke Pots
DOT label . . . . Explosive C
UNO serial number 0016
DODAC 1365-K866
Drawing number 36-1-18

References:

FM 3-50
SB 3-30-153
SC1340/98-IL
TB CML 100

SMOKE POT: SCREENING, FLOATING, TA, PRACTICE, M8

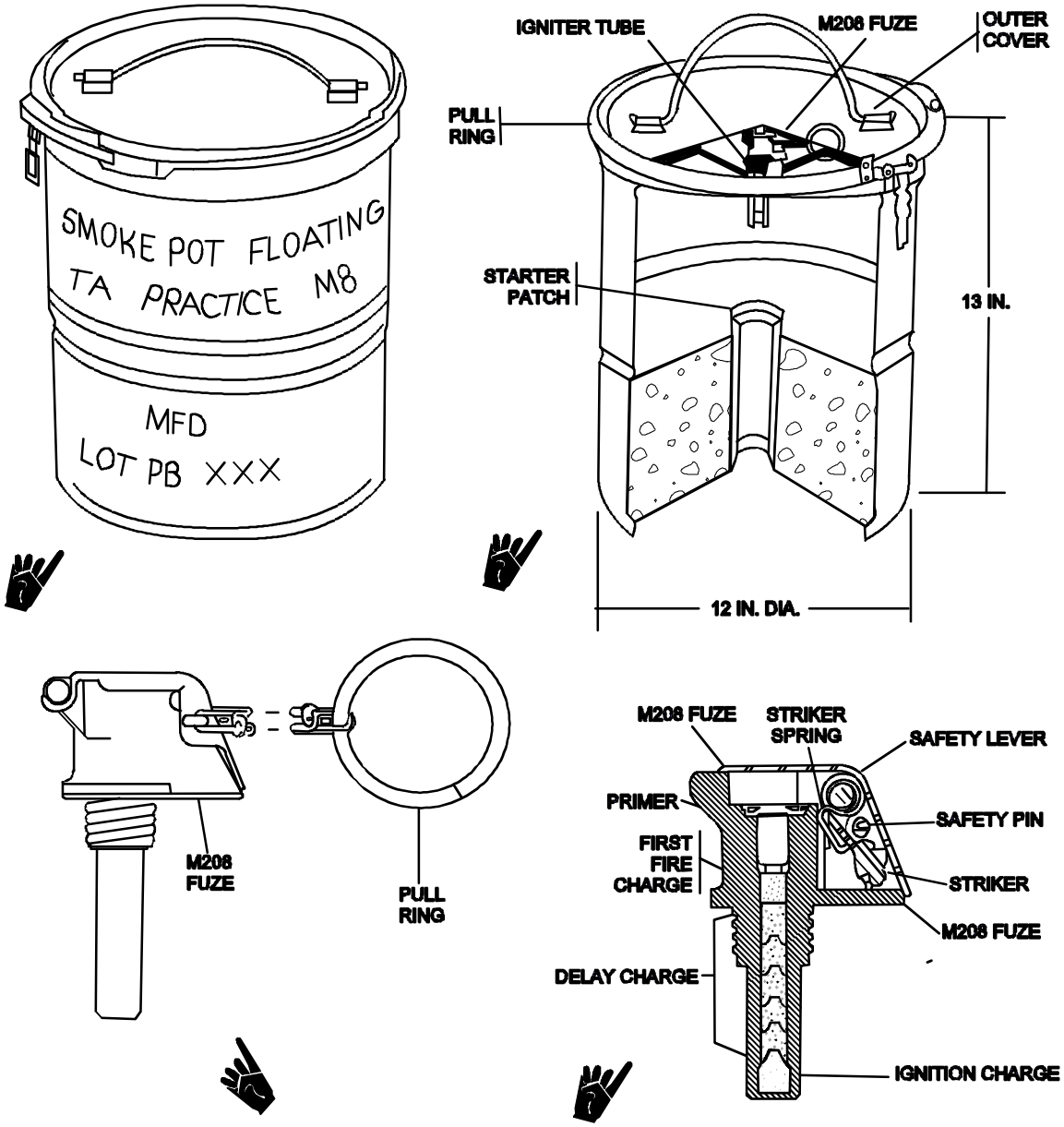

Type Classification:

STD(LCC-A); MSR 10946026

Use:

To generate screening smoke when a floating source of smoke is required for river crossings and beach landings. It can also be used on land. Is used as a training device for the M4A2 Smoke Pot.

Description:

The M8 TA floating smoke pot is a 5-gallon metal pail with its lower half filled with about 25 pounds of TA smoke mixture and fuzed with an M208 floating smoke pot fuze. The M208 fuze is a pyrotechnic, delay-igniting fuze.

Functioning:

Before the M8 smoke pot can be employed, the ring clamp and outer cover must be removed. The M208 fuze safety lever is held against the fuze body and the safety pin withdrawn by pulling the pull ring. The pot is lifted by its handle and dropped into the

water. The air chamber in the pot causes it to float. When the fuze safety lever is released, the striker spring drives the striker which hits the primer. The primer ignites the firstfire charge, which, in turn, ignites the delay charge. After about 8 to 12 seconds, the delay charge ignites the ignition charge thus completing the fuze action. Flame from the ignition charge ignites the starter sleeve, which ignites the TA smoke-mixture filling. Pressure from the heat builds up inside the pot and blows off the adhesive tape covering the vents in the inner cover. Smoke particles escape through the vents to form a dense, white smoke cloud.

Limitations:

Breathing TA smoke can be injurious to the respiratory tract of exposed personnel. Personnel must wear respiratory protection (protective masks) whenever any exposure to TA smoke is anticipated. They must wash exposed skin with soap and water after handling TA smoke pots.

Tabulated Data:

NSN..... 1365-01-380-1678
Unit of issue .....Each
Basis of issue ..... TAAMS
Weight .....34 lb
Height.....13 in.
Diameter .....12 in.
Filler:
Type .....TA smoke mixture
Weight .....25 lb
M208 Fuze:
Type ..... Mechanical/pyrotechnic
Delay time ..... 8 to 12 sec
Safety devices.....Pull ring, chain and safety pin

Performance:

Delay time ..... 30 to 40 seconds
Burning time ..... approximately 5 min

Shipping and Storage Data:

Type pack.....1 per wood box or steel drum
Weight .....51 lb
Cube.....2 to 2.1 cu ft
Quantity-distance class 1.3
Storage comparability group .....G
DOT hazard classification.....1.4G
DOT/UN Proper Shipping Name..... Signals, Smoke UN0197, NSN 1365-01-380-1678
DOT label ..... .Explosive 1.4G
UNO serial number UN0197
DODAC 1365-K511
Drawing number..... ..36-1-300

References:

FM 3-50
TB CML 100

CHAPTER 5
SERVICING

	Page
Adapter, Line, Filling, One-Ton Container: M1	5-3
Apparatus, Filling, Field, Land Mine: M2	5-5
Beam, Hoisting, Liquid Gas Tank: M1	5-7
Compressor Unit, Reciprocating: Flame Thrower, 3-1/2 CFM, AN-M4, AN-M4B, AN-M4C, and AN-M4D	5-9
Hoisting Unit, Tripod, Drum: M1 (Deleted)	5-11
Mechanism, Valve Replacement: M1	5-13
Service Kit, Portable Riot Control Agent Dispersec M254	5-15
Service Kit, Portable Flame Thrower Riot Control Agent Dispersec M27	5-17
Service Unit, Flame Thrower, Tracked Vehicle Mounted: M45 (Deleted)	519
Service Unit, Flame Thrower, Truck-Mounted: M4A2 (Deleted)	5-21
Wrench, Valve-Removing: M1 and M2	5-23

ADAPTER, LINE, FILLING, ONE-TON CONTAINER: M1

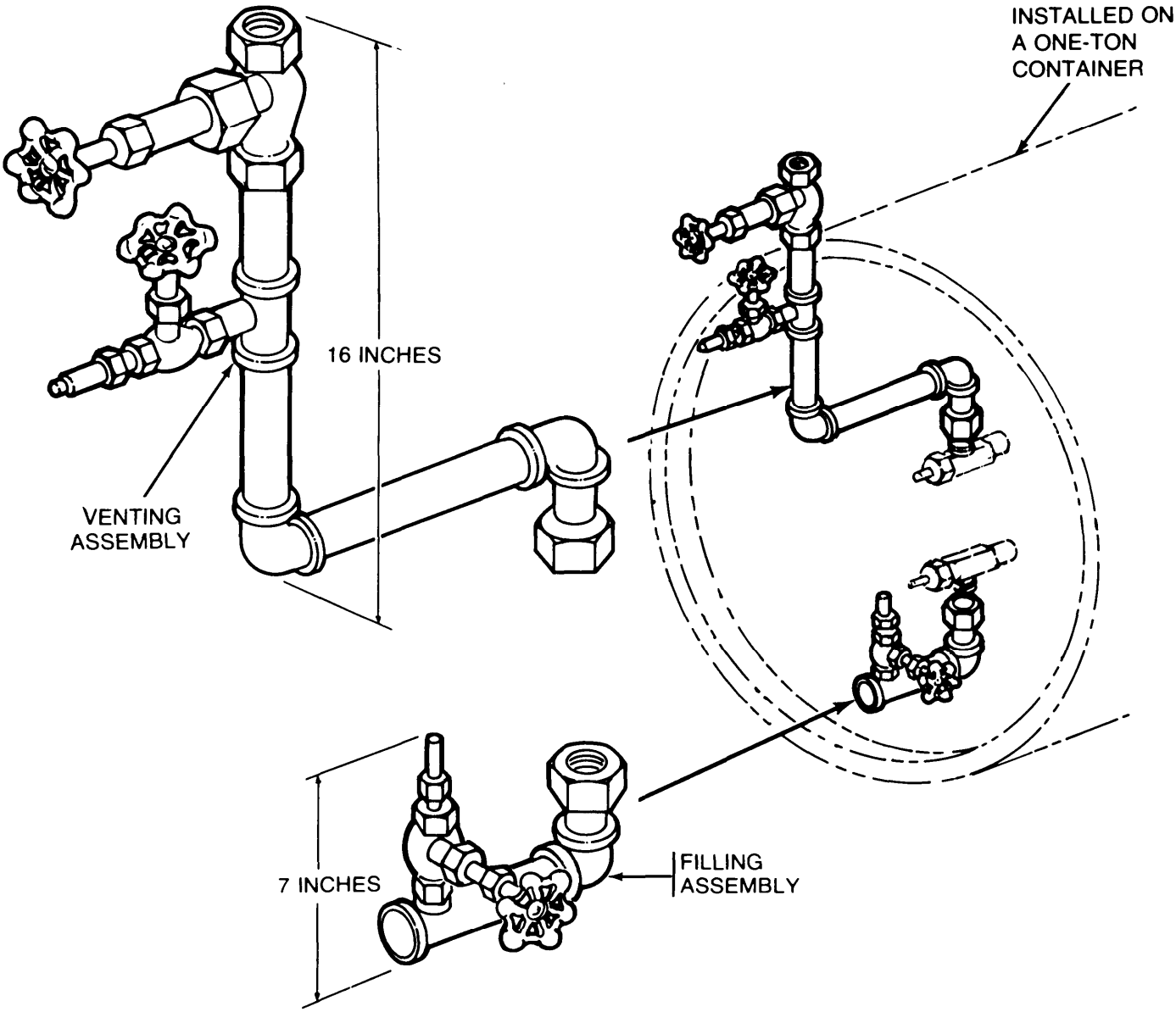

Type Classification:

STD (LCC-A); CCTC 546 42

Use:

To vent one-ton liquid gas tanks (containers) containing liquid chemical agents, to start flow from partly filled containers, and to clean clogged eduction tubes and valves in the containers.

Description:

The M1 one-ton container filling line adapter consists of a venting assembly and a filling assembly. Both assemblies are made of globe and pneumatic tank valves, angle valve adapters, valve adapters, piping and pipe elbows, tees, and nipples.

Functioning:

The venting and filling assemblies must be preassembled before using the M1 adapter. Coupling nuts on the angle valve adapters are used to connect the venting and filling assemblies to the angle valve outlets on the one-ton container. Handwheels are used to open

and close the valves on the venting and filling assemblies.

Limitations:

Personnel handling toxic chemical agents must wear full toxicological agent protective clothing and masks.

Tabulated Data:

NSN 4730-00-368-6188
Line item number A09002
Unit of issue . . . . Each
Basis of issue AR310-34
TOE/MTOE/TDA

Performance:

The M1 adapter fits the valves on the type A and type D one-ton liquid gas tanks.

Shipping and Storage Data:

Type pack . . . .8 per wood box
Weight . . . .124 lb
Cube . . . .5.8 cu ft
Drawing number 28-20-21

References:

TB CML 111
TM 3-4730-200-15
TM 3-4730-200-25P

APPARATUS, FILLING, FIELD, LAND MINE: M2

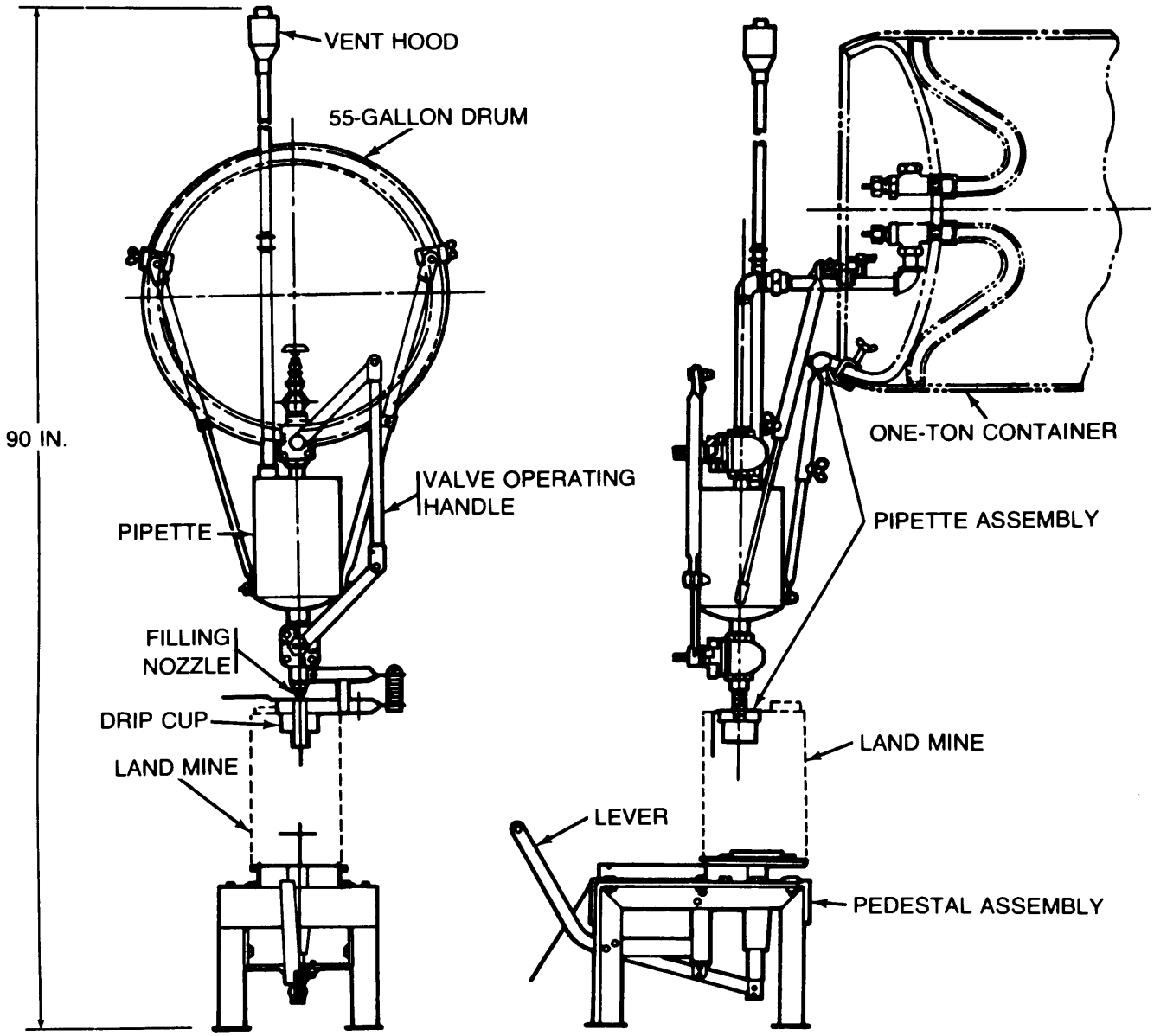

Type Classification:

STD (LCC-A); CCTC 768 43

Use:

To fill one-gallon chemical land mines in the field with HD, H blister agents, or MR simulant agent from bulk containers.

Description:

The M2 land minefield filling apparatus consists of a pipette assembly and a pedestal assembly. The pipette assembly consists of a one - gallon pipette, valves, a valve operating handle, a filling nozzle, a drip cup, a vent hood, piping, angle valve adapters, supports, and clamps. The pedestal assembly is a metal stand with an elevating table and lever.

Functioning:

a. The M2 apparatus is assembled before the filling operation begins. The piping, fittings, supports, and clamps used depend upon the type of bulk container: 55-gallon drum or one-ton liquid gas tank (container).

The container is placed horizontally on a stand and the M2 apparatus is clamped onto the container at the valve end. Angle valve adapters are used to connect the piping to the valves on the container.

b. To fill an empty chemical land mine, the gate valve (55-gallon drum) or lower valve (one-ton container) is opened and the mine is seated on the elevating table. The lever is used to raise the mine until the filling nozzle enters the filling hole of the mine. Raising the operating handle closes the lower plug valve and opens the upper one. The chemical agent flows from the container into the pipette. The pipette fills with the correct volume of agent, When air stops escaping from the vent hood, the pipette is filled. Lowering the operating handle closes the upper plug-valve and opens the lower one. The chemical agent then flows from the pipette and fills the mine. The operating handle is raised to refill the pipette. The elevating lever is used to lower the elevating table so that the filled mine can be capped and removed. The drip cup covers the filling nozzle until another empty mine is being filled.

Limitations:

Personnel handling toxic chemical agents must wear toxicological agent protective clothing and masks.

Tabulated Data:

NSN 1040-00-368-6170
Line item number A85131
Unit of issue . . . . Each
Basis of issue . . . . AR 310-34-TOE/MTOE/TDA
Mine, Chemical Agent: Land, One-gallon:
DODAC 1345-K260

Performance:

Filling time . . . .18 sec per gallon

Shipping and Storage Data:

Type pack . . . . Wood box
Weight . . . .198 lb
Cube ., ...8 tuft
Drawing number 21-49-2

References:

SB 3-1040-7
TM 3-1040-222-15
TM 3-1040-222-25P

BEAM, HOISTING, LIQUID GAS TANK: M1

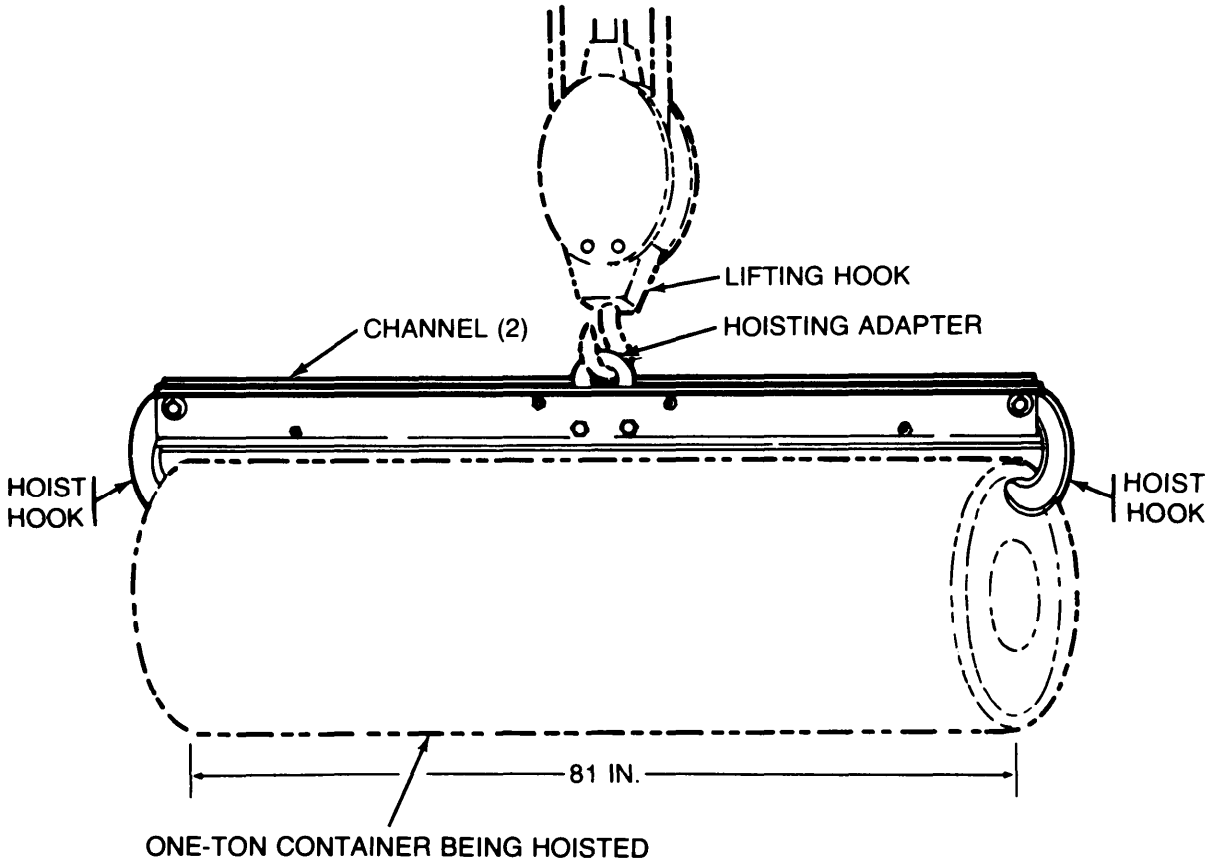

Type Classification:
STD (LCC-A); CCTC 51342

Use:
To provide a means for a hoist to lift a one-ton container (liquid gas tank).

Description:
The M11 liquid gas tank hoisting beam consists of two structural steel channels with hoist hooks, pivoted at the ends, and a hoisting adapter between them at the center. The channels, separated by spacers, are bolted together to form the hoisting beam. Each hook is pivoted on a stud, which is bolted to the two channels. A headless straight (hook locking) pin is located at each end of the beam.

Functioning:
The hoisting adapter is hooked to the hook on the hoist, and the beam is lowered until it rests on the container. When the beam is raised, the hooks move until the weight of the container is applied to the studs. The pin on each end of the beam locks each hook against the rim of a one-ton container while the container is being hoisted.

Tabulated Data:

NSN	1730-00-368-6195
Line item number	B52875
Unit of issue	Each
Basis of issue	MTOE/TDA
Weight	150 lb
Length	81 in.

Performance:
The M1 beam can be used to lift a filled type A or type Done-ton container (liquid gas tank) weighing 3,500 Ibs.

Shipping and Storage Data:

Type pack	Wood box
Weight	192 lb
Cube	3.2 cu ft
Drawing number	28-10-4

References:
SB 3-1730-1
TM 3-1730-201-25P
TM 3-662-15

COMPRESSOR UNIT, RECIPROCATING: FLAME THROWER, 3-1/2 CFM, AN-M4, AN-M4B, AN-M4C, AND AN-M4D

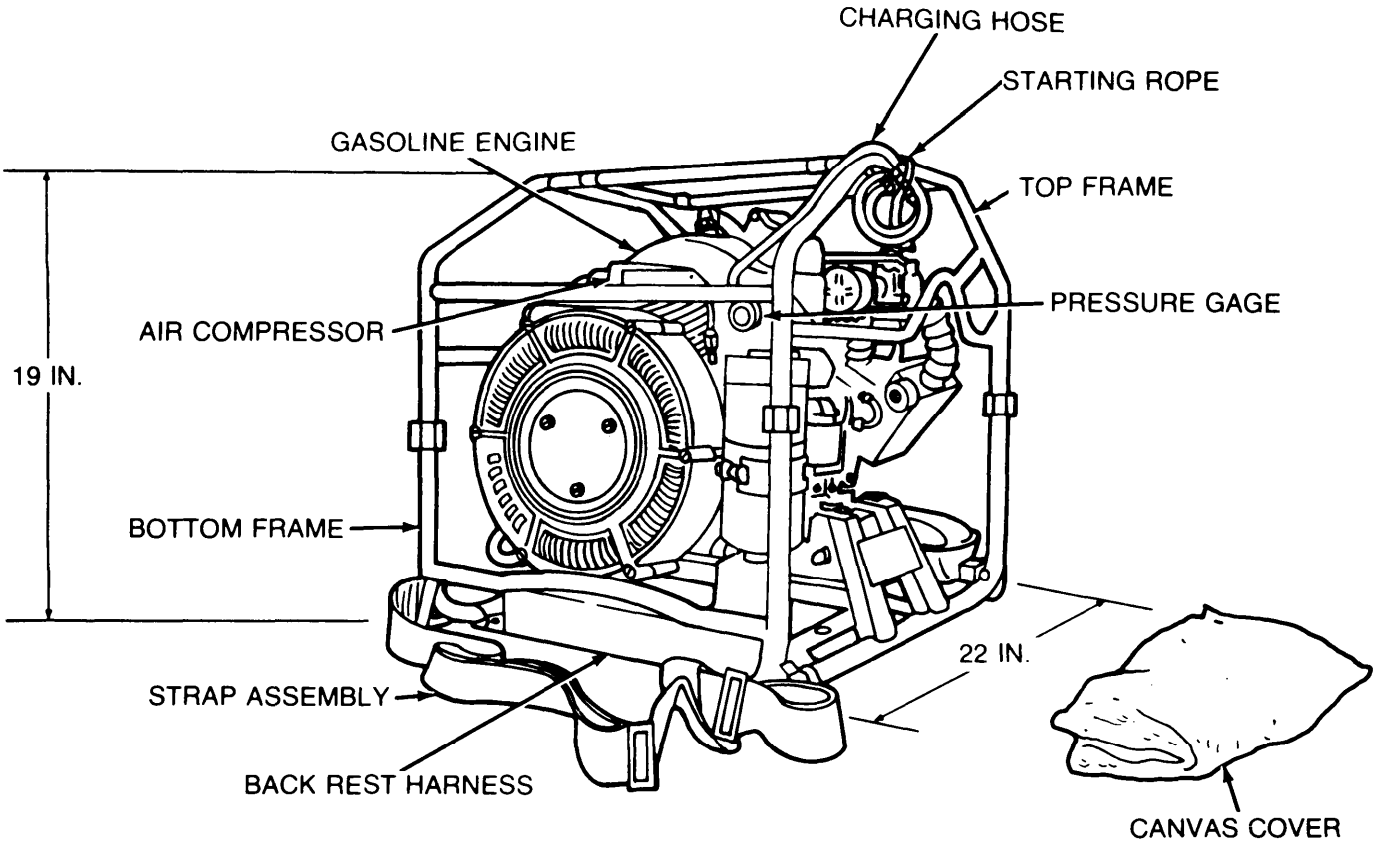

Type Classification:

AN-M4 STD (LCC-A); CCTC 3720 60
AN-M4B STD; AMCTC 3938 65
AN-M4C STD; AMCTC 3938 65
AN-M4D STD; AMCTC 7797 70

Use:

To compress air to a pressure of 2000 psi and deliver it at 3.5 cubic feet per minute (CFM) to pressure tanks of portable flame throwers and riot control agent dispersers.

Description:

The AN-M4 series compressors are air-cooled, self-contained, portable units. Each unit consists of a three-stage reciprocating-piston-type air compressor coupled directly to a one-cylinder, four-cycle, air-cooled gasoline engine. The air compressor and engine, are mounted on a lightweight tubular aluminum and steel frame. Each compressor is equipped with a shoulder and waist strap assembly, a canvas backrest harness, a charging hose assembly with adapters, a starter rope, and a canvas cover.

Difference Between Models:

Models AN-M4 and AN-M4B are equipped with 1 A08- 2 military standard engines. Models AN-M4C and AN-M4D are equipped with 1 A08-3 military standard engines. The 1 A08-2 and 1 A08-3 engines have different exhaust manifolds, throttle controls, radio suppression filters, breather lines, oil filler tubes, governors, air cleaners, air ducts, and ignition cutoff *systems.* The military engines of the same models also vary in dimensions and weight. Although similar in function and oper-

ation, the compressors in the M4, M4B, M4C, and M4D are not interchangeable.

Functioning:

The compressor charging hose and adapter are connected to the pressure tank to be charged. The engine is started; and the compressor begins delivering compressed air at 3.5 cubic feet per minute. The pressure gage indicates when the pressure tank is fully charged. At 2000 psi, the pressure in the charging line is released.

Tabulated Data:

NSN
- AN-M4 4310-00-952-8560
- AN-M4B 4310-00-848-6075
- AN-M4C 4310-00-078-5431
- AN-M4D 4310-00-181-5054

Line item number ., ... E74037
Unit of issue . . . . Each
Basis of issue . . . . AR310-34. TOE/MTOE/TDA
Models AN-M4. AN-M4B, AN-M4C, AN-M4D
Weight . . . .68 lb
Dimensions . . . . 22 x 17 x 19 in.

Performance:

Pressure cylinder fill time . . . .5.5 min per 205 to 211 cu in.

Shipping and Storage Data:

Type pack . . . .Wood box
Weight . . . .165 lb
Cube . . . . . .13.6 cu ft
Drawing number . . . . DL 68-13-1522

References:

TM 3-1040-210-34P (AN-M4)
TM 3-1040-210-35 (AN-M4)
TM 3-1040-244-34 (AN-M4C)
TM 3-1040-244-35P (AN-M4 B and C)
TM 3-1040-263-34 (AN-M4D)
TM 3-1040-263-34P (AN-M4D)
TM 3-4310-100-10 (All models)
TM 3-4310-100-20&P (All models)
TM 750-156

MECHANISM, VALVE REPLACEMENT: M1

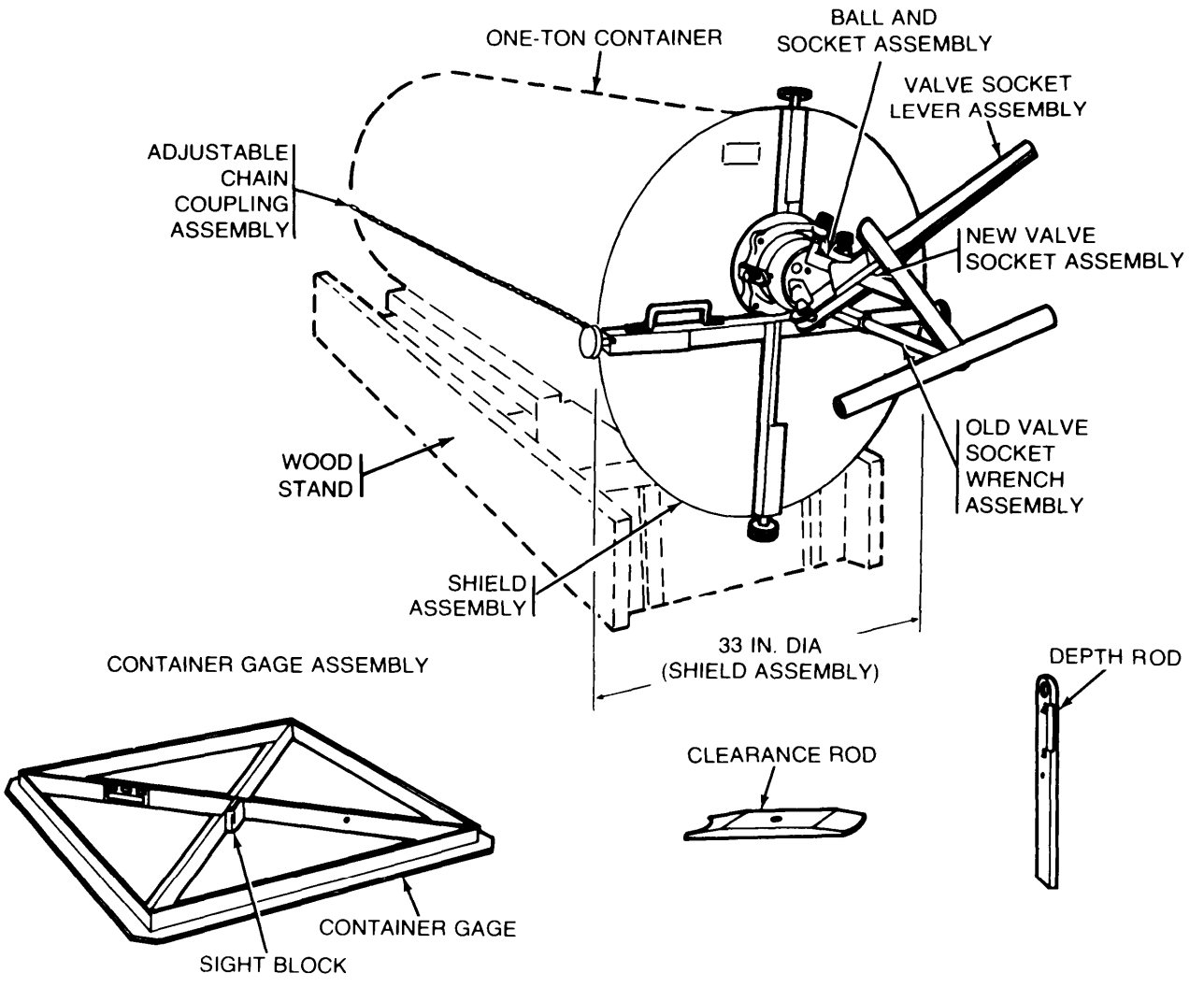

Type Classification:

STD (LCC-A); CWTC 51342

Use:

To remove faulty chlorine institute valves from type A and type D one-ton liquid gas tanks (one-ton containers) and to replace therewith new chlorine institute valves.

Description:

The M1 valve replacement mechanism consists of two old valve socket wrench assemblies, two new valve socket wrench assemblies, a ball and socket assembly, a valve socket lever assembly, a shield assembly, an adjustable coupling-chain assembly, and a container gage assembly.

Functioning:

The container gage assembly is used to determine whether the valve replacement mechanism will fit a one-ton container. The adjustable coupling chain assembly fastens the valve replacement mechanism to the front of the container. The socket wrench assemblies are held in operating position by the ball and socket assembly, which is mounted in a hole in the shield assembly.

The faulty valve is unscrewed and when it is free of the eduction tube outlet on the container, the valve holder is turned counterclockwise to the new valve position. The new valve is screwed into the empty eduction tube outlet and tightened.

Limitations:

Personnel handling toxic chemical agents must wear toxicological agent protective clothing and masks.

Tabulated Data:

NSN 4940-00-368-6190
Line item number M21964
Unit of issue . . . .Each
Basis of issue. . . . . MTOE . . . .MTOE/TDM
Weight (in chest) . . . .375 lb
Diameter
(shield assembly) . . . .33 in. dia

Performance:

A well-trained, two-man crew can remove a faulty valve from a one-ton container and insert a new valve against internal pressure in the container in 10 seconds.

Shipping and Storage Data:

Type pack . . . . Wood chest
Weight . . . .375 lb
Cube . . . .14.5 cu ft
Drawing number 6-15-88

References:

SB 3-4940-1
TB CML 111
TM 3-4940-200-15
TM 3-4940-200-24 P

SERVICE KIT, PORTABLE RIOT CONTROL AGENT DISPERSER: M254

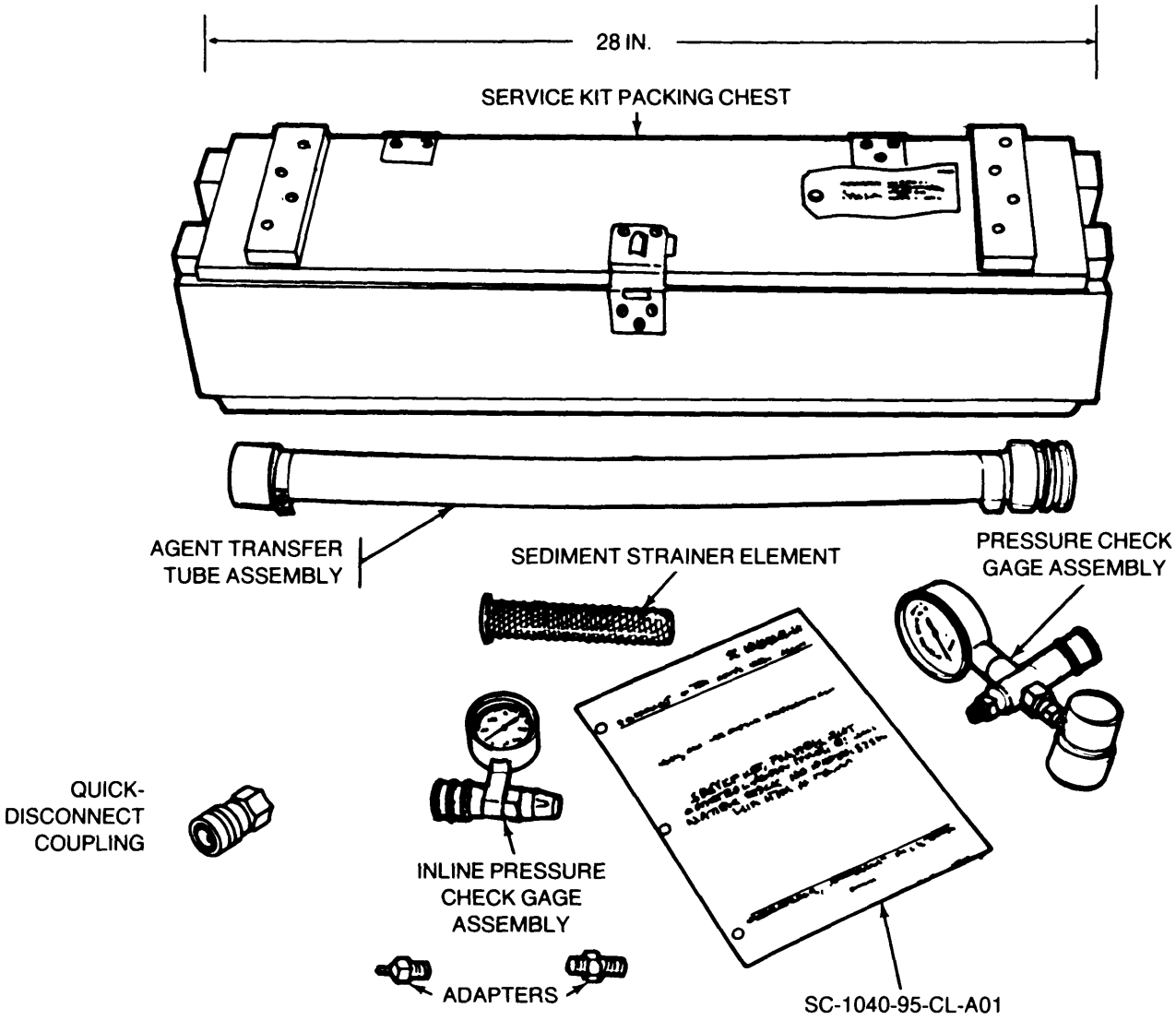

Type Classification:

STD (LCC-A); MSR 04736105

Use:

To charge the gas cylinder on an M33 or M33A1 portable riot control agent disperser with compressed air from a pressure source, to check and adjust the air pressure and air pressure regulator settings for the disperser, and to transfer riot control agent from its container to the disperser.

Description:

The M254 portable riot control agent disperser consists of the following items: a pressure check gage assembly, an inline pressure check gage assembly, a quick-disconnect coupling, an agent transfer tube assembly, a sediment strainer element, adapters, SC 1040-05-CL-A01, and a hinged wood packing case.

Functioning:

The pressure check gage assembly indicates the amount of air pressure contained in the gas cylinder being charged with a compressor or commercial compressed gas cylinder and in charged gas cylinders in storage. The inline pressure check gage assembly is used for checking the setting of the pressure regulator. The quick-disconnect coupling connects the disperser air cylinder to compressed air supply sources for charging. The agent transfer tube assembly is used for transferring riot control agent from its container to the agent

container of the disperser and back to the shipping and storage container, The sediment strainer element screens lumps from dry powdered riot control agent (e.g., CS1) while transferring the agent. Two compressor adapters connect the male quick-disconnect coupling to the nonmetallic charging hose assembly of a power-driven reciprocating air compressor. Another adapter connects the agent transfer tube assembly to the metal pail when transferring Riot Control Agent, CR Solution, to the M33A1 disperser agent container,

Tabulated Data:

NSN 1040-00-157-6974
Line item number S78839
Unit of issue . . . . Each
Basis of issue . . . . AR 310-34
TOE/MTOE/TDA
Weight . . . .20 lb
Dimensions . . . . . .28 X 5 X 5 in.

Shipping and Storage Data:

Type pack . . . . Wood chest
Weight . . . . . 20 lb
Cube . . . .0.4 tuft
Drawing number 116-3-104

References:

SC 1040-05-CL-A01
TM 3-1040-262-13&P

SERVICE KIT, PORTABLE FLAME THROWER RIOT CONTROL AGENT DISPERSER: M27

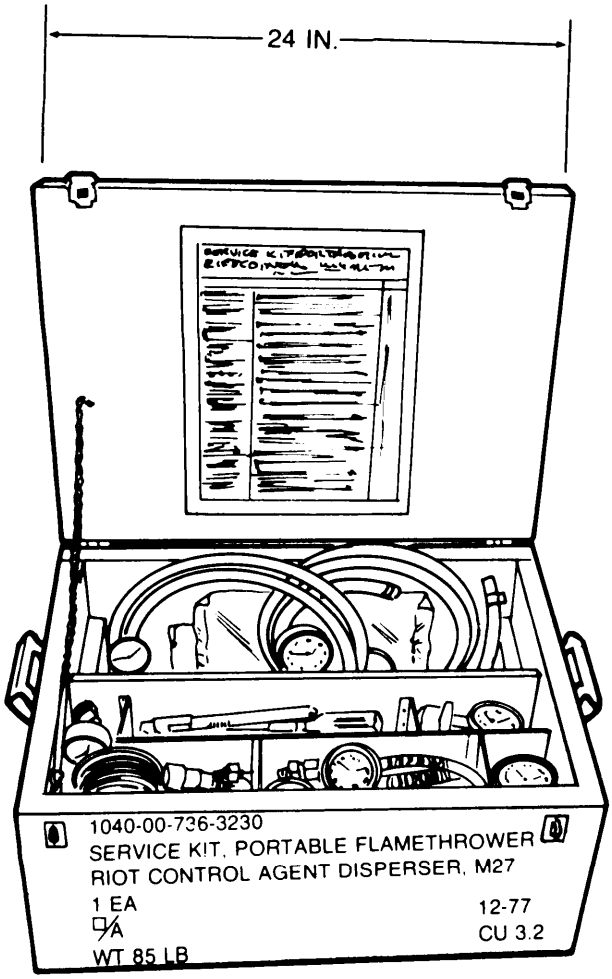

Type Classification:

STD (LCC-A); CCTC 3894 61

Use:

To charge commercial air cylinders, pressure tanks, and high-pressure spheres with compressed air from a pressure source; to test and adjust pressure regulators of portable flamethrowers and riot control agent dispersers; and to transfer flame fuel from a service unit, 55-gallon drum, or a 5-gallon can to portable flame throwers or flame land mines.

Description:

The M27 service kit consists of a filling line assembly, a pressure cylinder test gage assembly, two fuel tank test gage assemblies, an agent tank test gage assembly, a compressed air pressure regulator, three hose assemblies, a fuel transfer cap, adapters, a quick-disconnect coupling half, tube reducers, a check valve assembly, tools, antiseize compound, a wire, and a hinged wood packing chest.

Functioning:

The filling line assembly is used to attach pressure lines to commercial air cylinders. The test gage assemblies are used to determine the pressure of the M2A1-7 flame thrower pressure tank and to test and adjust the pressure regulators on M2A1-7, ABC-M9-7, or M9A1-7 flame throwers and on the M3 and M5 riot control agent dispersers.

The compressed air pressure regulator is used to regulate and reduce pressure from the pressure source to the pressure required for flame fuel filling operations. The hose assemblies are used to transfer flame fuel during flame thrower charging operations and to transfer riot control agent during riot control disperser charging operations. The fuel transfer cap is used with a pressure source to transfer fuel from a 5-gallon gasoline can to a portable flame thrower fuel tank. The remaining components are used to assemble pressure or fuel lines.

Limitations:

The M27 service kit is not used to service the M33 or M33A1 portable riot control agent dispersers. The M254 portable riot control disperser service kit is used to service them.

Tabulated Data:

NSN 1040-00-736-3230
Line item number S78771
Unit of issue . . . . Each
Basis of issue . . . . AR 310-34; TOE/MTOE/TDA
Weight . . . .85 lb
Dimensions . . . . . .24.4x19.4 x 11.75 in.

Performance:

Provides tools, fittings, and charging hoses for servicing the M2A1-7, ABC-M9-7 and M9A1-7 portable flame throwers, and the M3 and M5 riot control agent dispersers. Connects equipment to be serviced with the AN-M4 series compressor, M4A2 and M45 service units, and other pressure, fuel, or agent containers.

Shipping and Storage Data:

Packing . . . . Wood chest
Weight . . . . . 85 lb
Cube . . . .3.2 cu ft
Drawing number . . . . DL 81-6-369

References:

FM 20-33
SC 1040-94-CL-E02
TM 3-1040-221-12
TM 3-366
TM 750-159

WRENCH, VALVE-REMOVING: M1 AND M2

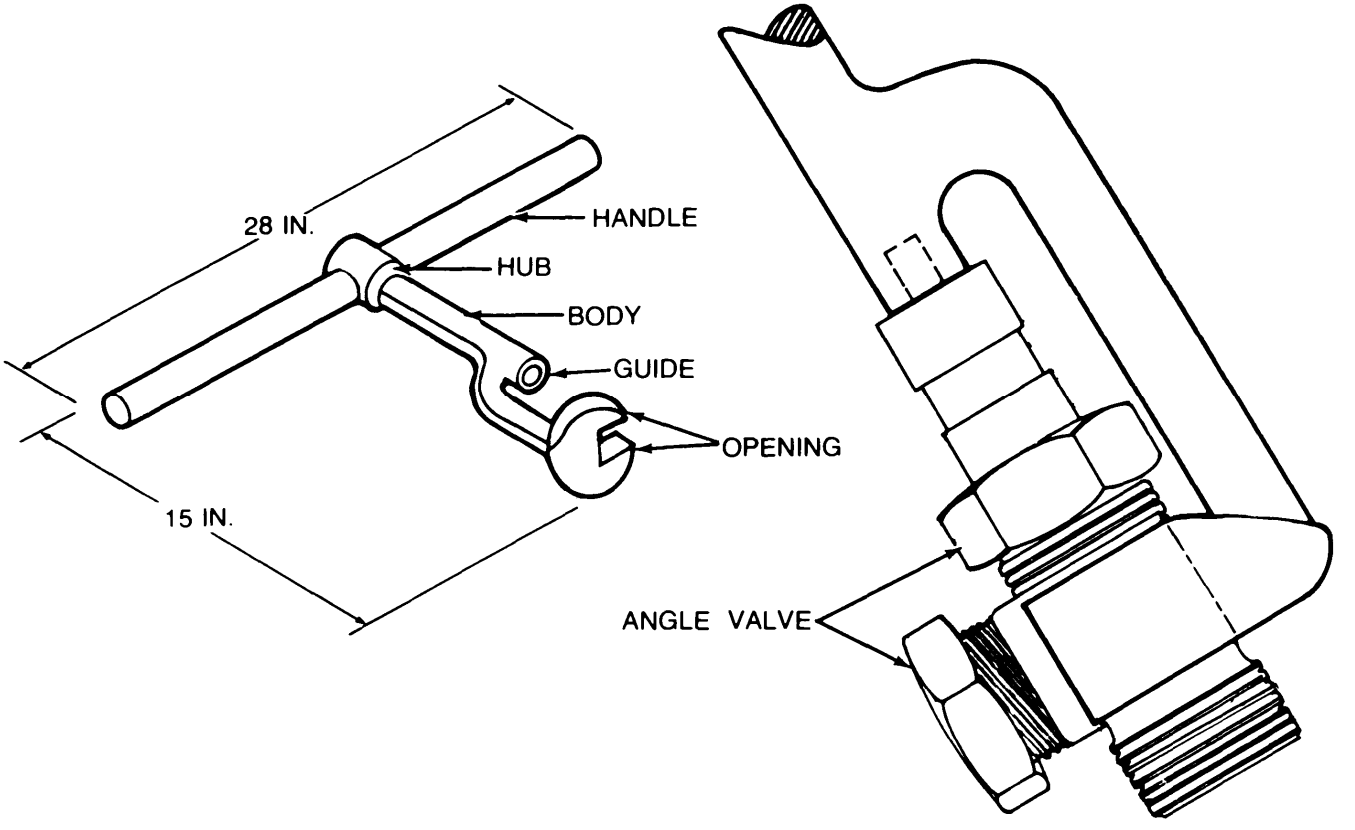

Type Classification:

STD (LCC-A); CWTC 513 42

Use:

To install or to remove valves from one-ton containers (one-ton liquid gas tanks).

Description:

The M1 and M2 valve-removing wrenches each consist of a steel body, a guide, a hub, and a handle. One end of the body is shaped with an opening to fit over an angle valve or needle valve. The other end receives the handle, which is held in place by a setscrew.

Difference Between Models:

The M1 valve-removing wrench has a 1 35/64-inch wide opening for removing one-inch angle valves. The M2 valve removing wrench has a 1 9/64-inch wide opening for removing 3/4-inch chlorine institute needle valves.

Functioning:

The valve removing wrenches are usually used to tighten or loosen valves when using the MI valve replacement mechanism. The wrenches are also used to install or to remove valves from one-ton containers, when the M1 valve replacement mechanism cannot be used.

The one-ton container is rolled on its side with the two valves alined vertically so that the valve to be removed is uppermost. The wrench opening is placed over the valve to be removed. The guide fits over the valve nipple. The wrench handle is turned counterclockwise until the valve is free of the eduction tube outlet. The new valve is seated in the eduction tube outlet, mated with the wrench opening, and tightened by turning the wrench handle.

Limitations:

When using the valve-removing wrenches on one-ton containers that contain toxic chemical agents, the operators must wear toxicological agent protective clothing and masks. When replacing chlorine institute

valves in a filled type A or type Done-ton container, the M1 valve-replacement mechanism should be used if possible.

Tabulated Data:

NSN:
- M1 5120-00-368-6191
- M2 5120-00-368-6192

Line item number:
- M1 . . . . Y64375
- M2 . . . . Y64512

Unit of issue . . . .Each
Basis of issue . . . . AR310-34. TOE/MTOE/TDA
Handle . . . . . 28 in. long
Overall length . . . .15 in.
Width of opening:
- M1 . . . .1 35/64-in.
- M2 . . . . . .1 9/64-in.

Performance:

One operator can remove a valve with the M1 or M2 valve-removing wrench. An assistant operator maybe needed to help seat a new valve in a container where the pressure exceeds 50 psi.

Shipping and Storage Data:

Packing . . . . 10 per wood box
Weight . . . .135 lb
Cube . . . .6 cu ft
Drawing number:
- M1 68-6-2
- M2 68-6-3

References:

SB 3-5120-1
TB CML 111
TB CML 112
TM 3-4940-200-15

CHAPTER 6
MAINTENANCE AND REPAIR

Page

Test Set, Flame Thrower-Riot Control Agent
Disperser, Hydrostatic-and-Volumetric:6,000PSI, M5 6-3

TEST SET, FLAME THROWER-RIOT CONTROL AGENT DISPERSER, HYDROSTATIC-AND-VOLUMETRIC: 6,000 PSI, M5

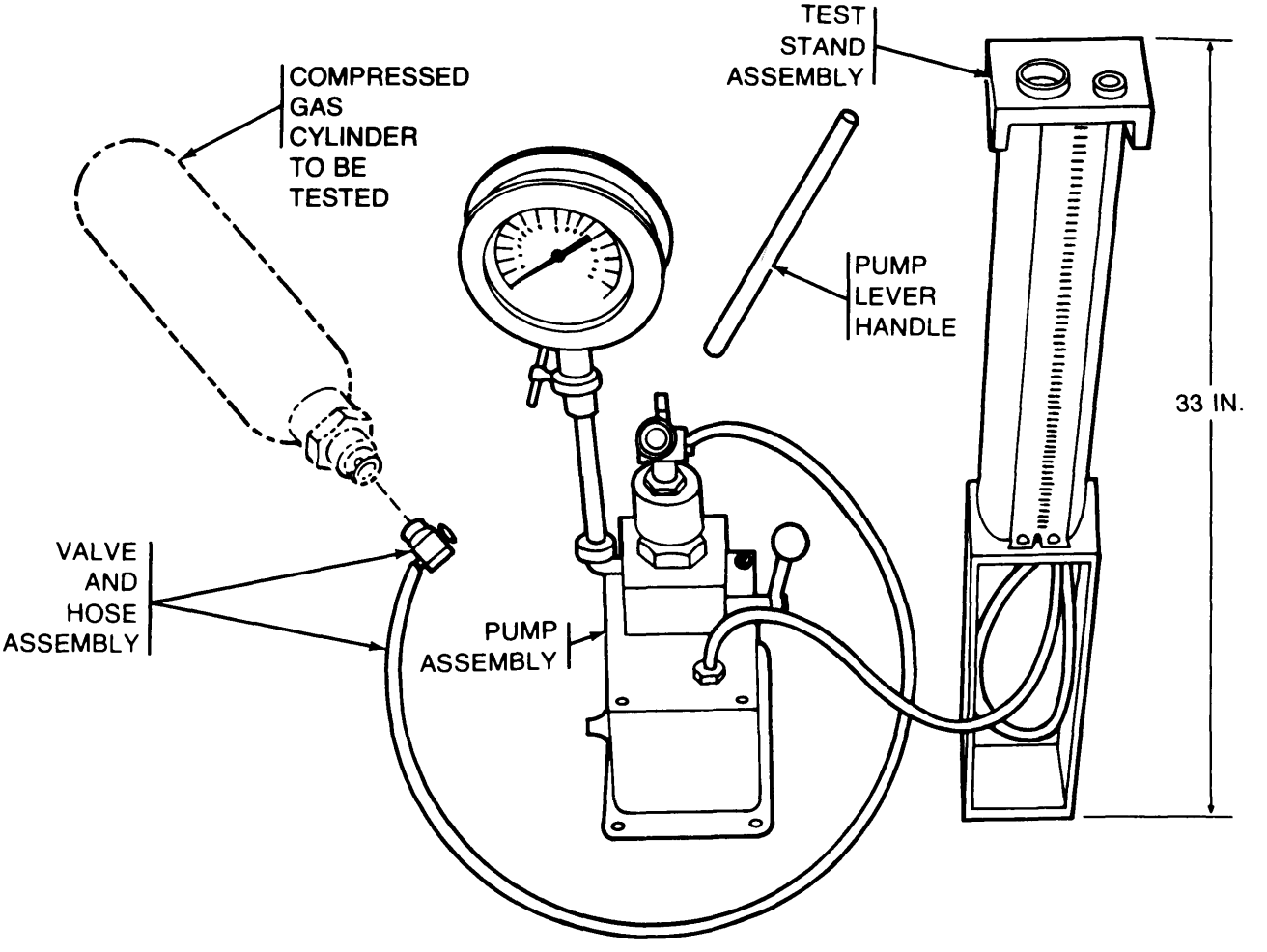

Type Classification:

STD (LCC-A); MSR 12766022

Use:

To test components of portable flamethrowers and portable riot control agent dispersers for leaks and deformation under pressure.

Description:

The M5 hydrostatic-and-volumetric flame thrower-riot control agent disperser test set consists of a pump assembly, a test stand assembly, a valve and hose assembly, and miscellaneous fittings for connecting the set to the various components of the portable flame throwers and dispersers being tested.

Functioning:

The M5 test set provides a source of hydraulic pressure to perform both hydrostatic and volumetric testing of the tanks on portable flame throwers and riot control dispersers. Hydraulic pressure is supplied by the pump assembly and measured on the pressure gage when hydrostatic pressure testing. The large and small tube assemblies are used to measure the expansion of the tanks when subjected to the hydraulic pressure during volumetric pressure testing.

Tabulated Data:

NSN 1040-00-050-7952
Line item number V77444
Unit of issue . . . . Each
Basis of issue . . . . AR310-34. TOE/MTOE/TDA

Weight (unpacked):
Empty . . . .75 lb
Filled . . . .85 lb

Performance:
Maximum pressure . . . .6.000 psi
Testing pressures:
Fuel and agent tanks . . . .450 to 625 psi
High pressure spheres, tanks, or compressed air cylinders . . . .3,350 psi

Shipping and Storage Data:
Packing . . . .Wood box
Weight . . . .100 lb
Cube . . . .7 cu ft
Drawing number . . . . LM 81-6-392

References:
SC 5180-94-CL-E05
TM 3-1040-251-15

CHAPTER 7
TRAINING

	Page
Adapter, Launcher, Subcaliber Rocket: M5 (Deleted)	7-3 ■
Capsule, Riot Control Agent: CS	7-5
Chemical Agent, Mustard, Simulant: MR	7-7
Simulator, Projectile Airburst, Liquid: M9	7-8.1
Talc, Technical: T3	7-9

CAPSULE, RIOT CONTROL AGENT: CS

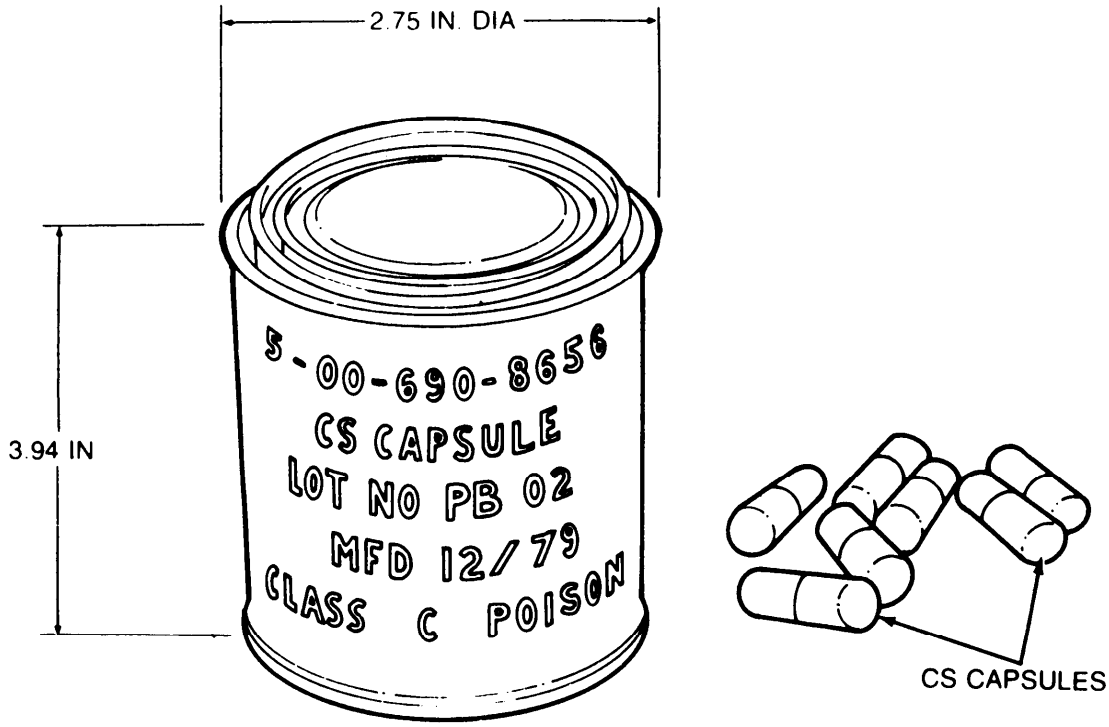

Type Classification:
STD (LCC-A); CCTC 358159

Use:
To demonstrate to trainees the protection afforded by properly fitted chemical-biological masks, and to demonstrate to unmasked trainees the effects of CS riot control agents.

Description:
The CS riot control agent capsule consists of a size 00 gelatin capsule filled with ground CS riot control agent (ortho-chlorobenzylidene malono-nitrile). The CS is ground to a particle size of less than 840 microns. The filled capsule weighs about 0.82 grams. Fifty CS capsules are packed in a resealable metal can.

Functioning:
The CS riot control agent is aerosolized by placing the capsule on an upended empty tin can that is placed over a burning candle. When the test chamber is filled with the agent, masked troops are brought into the chamber to gain confidence in their masks and test the fit of their masks. The troops are required to unmask to become familiar with the effects of the agent. The CS particles immediately sting and irritate skin, eyes, nose, and throat of exposed personnel. The symptoms are redness of the skin, tears, running nose, coughing, and tightness in the chest. The onset of these symptoms is extremely rapid. Incapacitating dosages lose their effects in 5 to 10 minutes.

Tabulated Data:
NSN 1365-00-690-8656
Unit of issue . . . . Can
Basis of issue . . . . TAAMS
Type container . . . . Metal can
Dimensions of can:
Height . . . .4 in.
Diameter . . . .2.75 in.
Composition . . . . . Orthochlorobenzylidene malononitrile (CS)
Stability in storage ... . Very stable

Shipping and Storage Data:
Packing . . . .50 capsules per can/5 cans per fiberboard box/ 10 boxes per wood box

Weight ..... 42 lb
Cube ..... 2 cu ft
Quantity-distance
class 1.4
Storage comparability
group ..... B
DOT hazard
classification ..... Irritating
material, solid
DOT shipping name ..... Irritating agent,
NOS

DODAC 1365-K765
Military specification MIL-R-51015B
(EA)

References:
SB 3-1365-7
SC 1340/98-IL

CHEMICAL AGENT, MUSTARD, SIMULANT: MR

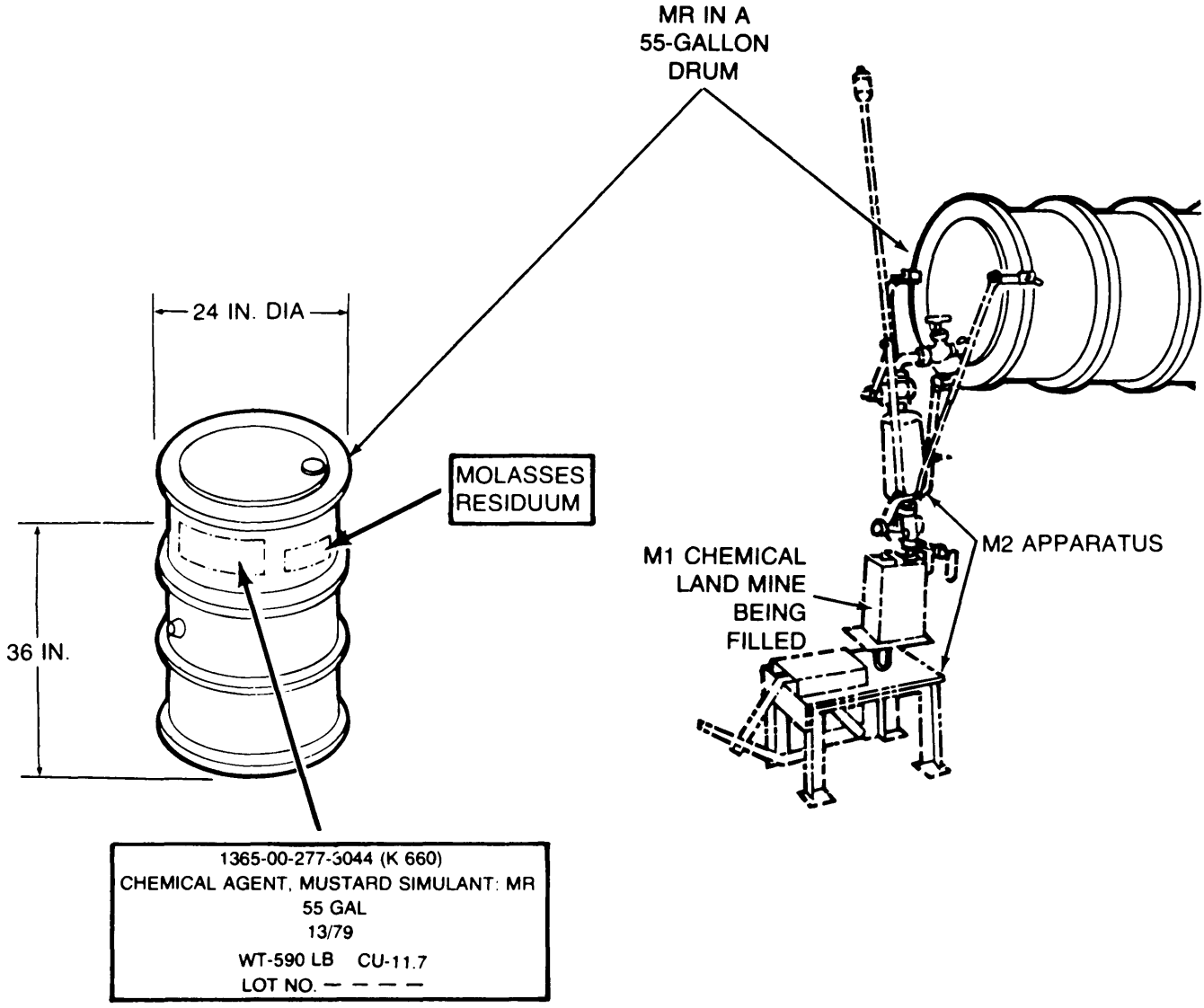

Type Classification:

STD (LCC-A); CWTC 7139

Use:

To simulate liquid chemical agents such as HO mustard blister agent in chemical defense training exercises, to train toxic agent handlers in the use of toxic chemical agent handling equipment, and to train soldiers in the employment of the M1 chemical land mine.

Description:

MR mustard simulant chemical agent is a mixture consisting of a 25 percent solution by volume of molasses residuum in water. The mixture forms a dark-brown liquid of thin, sirupy consistency and has a distinctive molasses odor.

Functioning:

MR is used as a simulant agent for filling M1 chemical land mines using the M2 land mine field-filling apparatus. M1 chemical land mines filled with MR are detonated to simulate chemical land mine fields. After the MR solution has been poured, detonated, or sprayed, its molasses odor can be detected on the contaminated area for about one hour, The patterns obtained by dispersion from airplane spray tanks, chemical land mines, and thin-case bombs are similar to those produced by HD,

Limitations:

MR solution is harmless unless swallowed. (The cresol used as a stabilizing agent is poisonous.)

Tabulated Data:

NSN	1365-00-277-3044
Line item number	E05999
Unit of issue	Drum
Basis of issue	TAAMS
Weight	590 lb
Length	35 in.
Diameter	24 in.

Shipping and Storage Data:

Packing	50-55 gal per drum
Weight	590 lb
cube	11.7 cu ft
DODAC	1365-K660
Military Specification	MIL-M-10856

References:

FM 3-9
SB 3-30-284
SC 1340/98-IL
TM 3-250
TM 3-1040-222-15
TM3-6680-316-10

SIMULATOR, PROJECTILE AIRBURST, LIQUID: M9

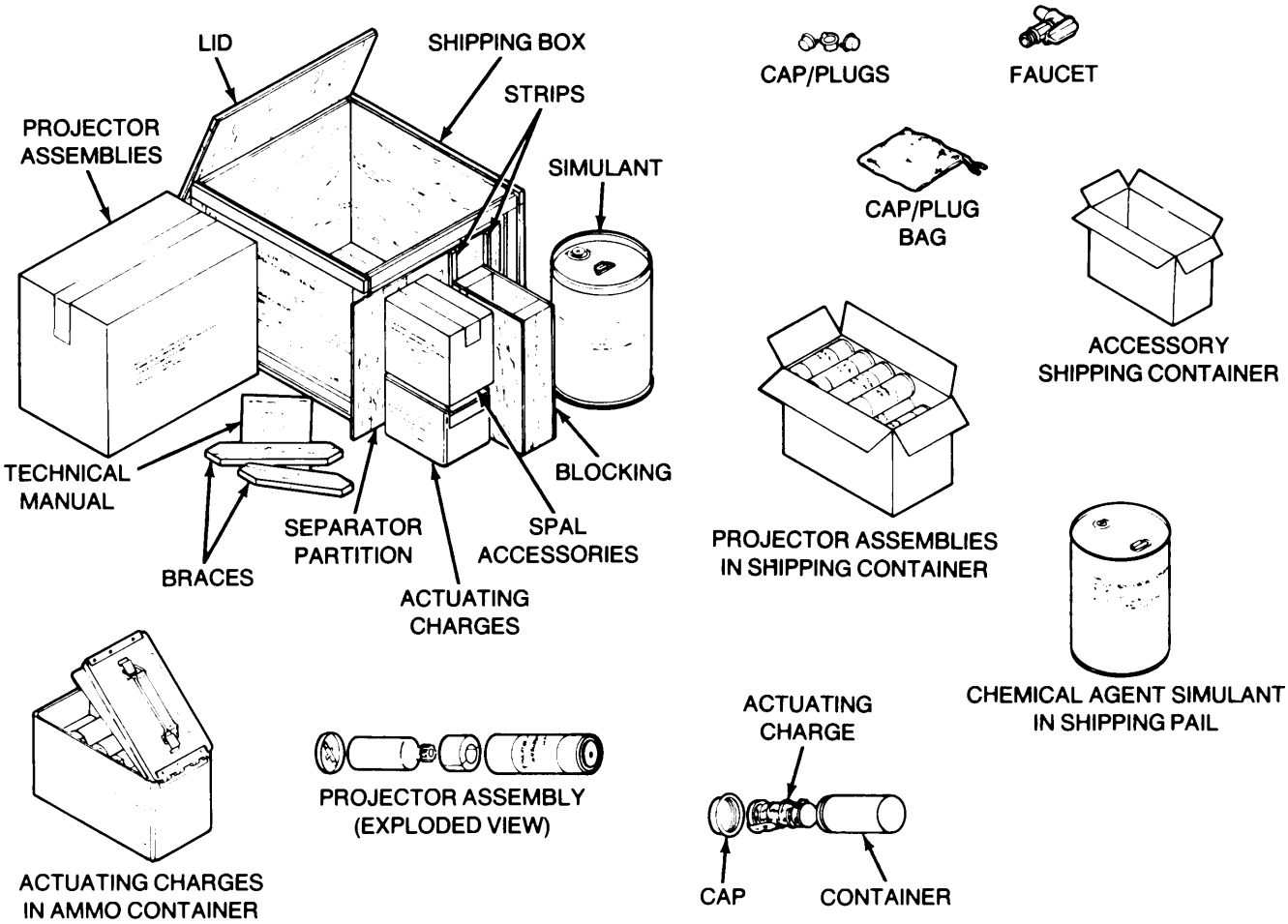

Type Classification:
STD (LCC-B)MSR09846004

Use:
The SPAL, when fired, simulates a toxic rain attack. It provides realistic chemical defense training for Army troops.

Description:
The M9 SPAL consists of 20 projector assemblies, 20 actuating charges, 5.5 gallons (21 liters) of containerized chemical agent simulant, and accessories. The M9 is portable, expendable, and can be fired in winds up to 15 Knots(17 1/4 MPH) (27.76 Kgn).

Functioning:
The projector assembly consists of a barrel, barrel lid, obturator, implanting spike, bottle and cap, and an O sealing ring. When the barrel lid tape is removed, the bottle and the implanting spike can be removed, but the obturator should remain in the bottom of the barrel with beveled edge upward. Four or five projector assemblies are placed on a line approximately 30 feet apart, wired to a single power source with the plastic bottles filled with chemical agent simulant, and then installed. The actuating charge, when in firing configuration and electrically charged, propels a simulant-filled bottle into the air. A one-second, bum- through delay fuze sets off a burster charge. This ruptures the bottle in the air to produce a cloud of spray from the simulant.

Limitations:
The simulant is toxic only if consumed, and should not contain actuating charges when a radio transmitter or electromagnetic radiation transmitter is within 300 feet because the charges may fire.

Tabulated Data:

NSN 1370-01-047-3479 L595
Line item number S57611
Unit of issue . . . .KT
Basis of issue . . . . . .
SPAL Effective Range Down wind Coverage (in recommended setup of five projector assemblies):
Width . . . . . .164 ft(50m)
Length . . . . . 164 t0 328 ft (50 to 100 m)

Projector Assembly:
Weight:
Empty . . . . . 1 lb(0.45kg)
Filled (one liter chemical agent simulant) . . . . . 3.5 lb(1.6kg)
Dimensions:
Height . . . . . 12 in.(30.5cm)
Diameter . . . . . 4.2 in. (10.7 cm)

Packaging Data:
SPAL Shipping Box:
Weight . . . . . 155 lb(70kg)
Length . . . .27 in.(69cm)
Width . . . . . .23 in.(58cm)
Height . . . .20 in.(51 cm)
Projector Assembly Shipping Container:
Number in container 20
Weight . . . . . 25 lb(11 kg)
Length . . . . . 22 in.(56cm)
Width . . . . . .13 in.(33cm)
Height . . . .18 in.(46cm)
Actuating Charge Ammunition Container:
Number in container 20
Weight . . . .9 lb(4kg)
Length . . . . . 12 in.(30cm)
Width . . . . . .6 in. (15 cm)
Height . . . .8 in.(20cm)
Chemical Agent Simulant Shipping Pail:
Volume . . . . . 5.5 gal (21 liters)
Height . . . .15 in. (38cm)
Weight . . . . . 60 lb(27kg)
Diameter . . . . . 12 in.(30cm)
Accessory Shipping Container:
Weight . . . . . 5 lb(2.3kg)
Length . . . . . 12 in.(30cm)
Width . . . . . .6 in.(15cm)
Height . . . . . .9 in.(22cm)

Shipping and Storage Data:

Refer to TM 9-1300-206, Chapter 4.

Reference:

TM3-1370-100-12

TALC, TECHNICAL: T3

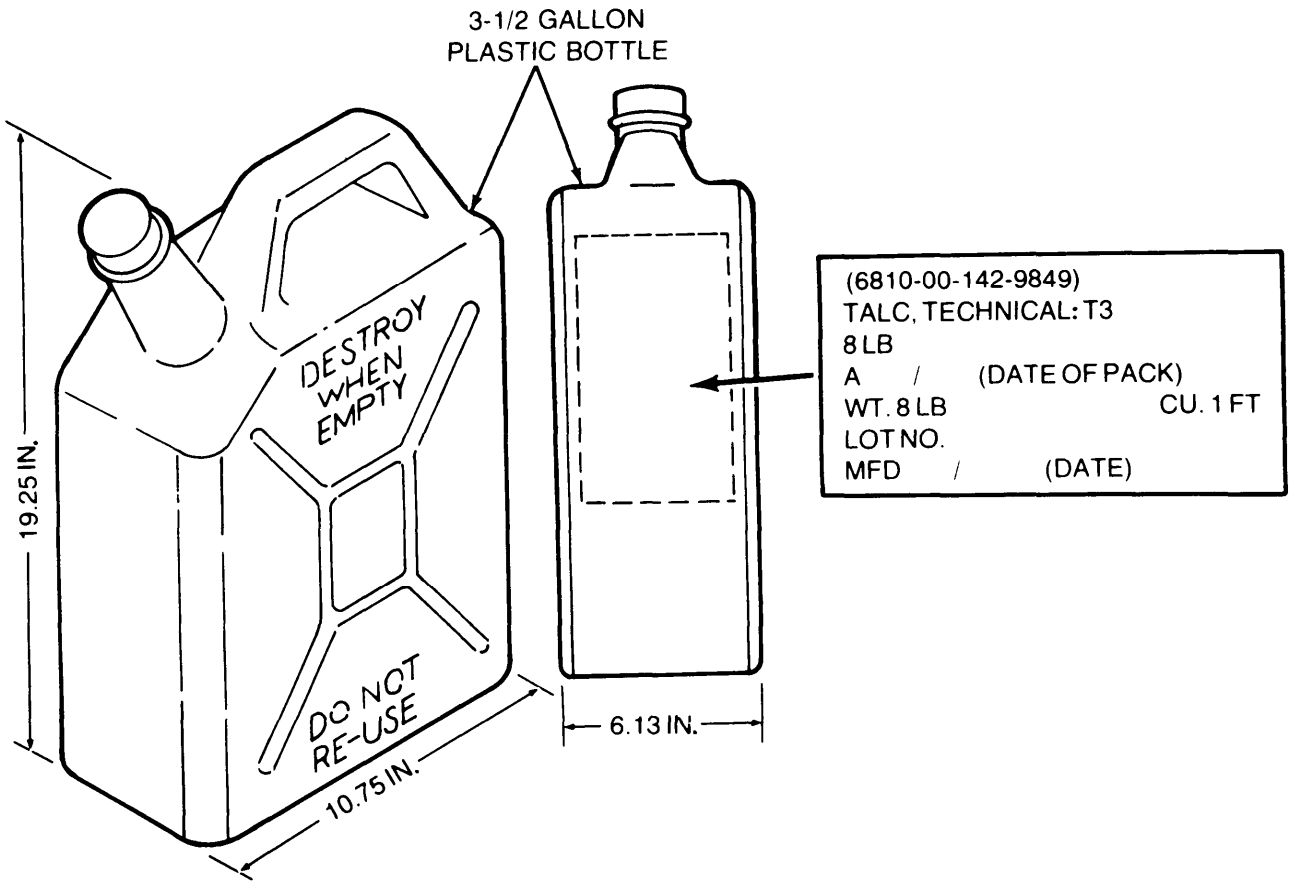

Type Classification:
Expendable; CTA 50-970

Use:
To simulate CS1 or CS2 riot control agent powder when training with riot control agent dispersers in situations requiring use of inert materials.

Description:
T3 technical talc is an inert, micro-pulverized white powder with the apparent bulk density and flow characteristics of CS1 riot control agent. Eight pounds of T3 talc are packed in a 3 1/2-gallon plastic screw-cap bottie. The T3 talc consists of 55 to 65 percent silica, 25 to 35 percent magnesium oxide, and 0.30 percent calcium oxide by weight. The T3 talc is ground to an average particle size of no more than 3.5 microns. It has an apparent density of no more than 0.25 grams per cubic centimeter.

Functioning:
The T3 talc is transferred from the bottle to the riot control agent dispersers by using the transfer tube assembly from an M254 service kit. If T3 talc powder is used as the agent fill for the M33A1 disperser, the operator must install a short check valve assembly in the agent tank and a single jet spray unit on the disperser gun. When T3 talc is sprayed from a disperser, a cloud of airborne T3 talc particles is formed. The particles travel downwind from the release point. The powder settles and readily infiltrates terrain, vegetation, personnel, and equipment. However, as T3 talc is an inert material, it harms neither exposed personnel nor the environment. Because the particles are so fine, they are soon dissipated by weathering.

Limitations:

Personnel handling or exposed to T3 talc should wear respirators or protective masks as a precautionary measure.

Tabulated Data:

NSN 6810-00-142-9849
Unit of issue . . . . Bottle
Basis of issue . . . . CTA 50-970
Type container . . . .3 1/2-gallon screw-cap plastic bottle
Weight . . . . . 8 lb (fill)
Dimensions . . . .19.25 x10.75 x 6.13 in.
Composition and percentage by weight:
Silica . . . . . .55%min/65% max
Magnesium oxide 25%min/35%max
Calcium oxide 0.3%max
Particle size . . . . 3.5 microns max
Apparent density . . . . 0.25 gm per cc max

Shipping and Storage Data:

Packing . . . .3-gallon plastic bottle; 8 lb per bottle; 5 bottles per wooden box
Weight . . . .84 lb
Cube . . . . . .5.8 cu ft
Specification EA-T-1044

References:

TM 3-1040-214-12
TM 3-1040-220-12
TM 3-1040-221-12
TM 3-1040-262-13&P

GLOSSARY

G-1. Type Classification and Logistics Control Codes (LCC). When applicable, items with the following type classifications and logistics control codes are included in this manual:

a. *Standard (LCC-A).* A combat acceptable item which will fill an operational requirement and is authorized for production to fill shortages.

b. *Standard (LCC-B).* A satisfactory item for filling an operational requirement but which is being or has been replaced by a newer generation or series of items.

c. *contingency (LCC-F).* A mission essential contingency item.

d. *Contingency (LCC-S).* A contingency-training item.

e. *Limited procurement (LCC-T).* A limited procurement-test item.

f. *Limited procurement (LCC-U). A* limited procurement-urgent item.

g. Test, measurement, and diagnostic equipment (LCC-N).

G-2. Expendable items. Expendable items except ammunition and selected high-density military-type items do not require type classification. All such items are listed in CTA 50-970 and can be obtained through normal supply channels for expendable.

G-3. Key to Abbreviations and Symbols.

ABC . . . . . American-British-Canadian
AMCTC . . . . . Army Materiel Command Technical Committee
AN . . . . . Army-Navy
APC . . . . . Armored personnel carrier
BZ . . . . . An incapacitating agent; 3-Quinuclidinyl benzilate
CCTC . . . . . Chemical Corps Technical Committee
CFM . . . . . Cubic feet per minute
CON . . . . . Contingency
CR . . . . . A tear agent, e.g., CR solution riot control agent
CS . . . . . A tear agent, e.g., CS mixture, CS1 powder, CS2 powder, or CSX liquid riot control agent; ortho-chlorobenzyl-malononitrile powder or solution.
ETA . . . . . Common Table of Allowances
CUFT . . . .Cubic feet-
CWTC . . . . . Chemical Warfare Technical Committee
DO . . . . . Methylphosphonic Difiuoride
DODAC . . . . . Department of Defense ammunition code
DOT . . . . . Department of Transportation
HA . . . . . HC mixture, a white screening smoke
HD . . . . . Distilled mustard, a persistent blister agent
HMDS . . . . . Hexamethyldisiloxane
LCC . . . . . Logistics control code
LP . . . . . Limited procurement
MR . . . . . Molasses residuum
MSR . . . . . Materiel status record
MTOE . . . . . Modified Table of Organization and Equipment
NOIBN . . . . . Not otherwise indicated by name
NOS . . . . . Not otherwise specified
NSN . . . . . National stock number
OBS . . . . Obsolete
OPA . . . . . Isopropyl Alcohol/Isopropyl Amine
PSI . . . . . Pounds-force per square inch
PIG . . . . . Pounds-force per square inch gage
RP . . . . . Red phosphorus, a white screening smoke when ignited
STD . . . . . Standard
TAMS . . . . . The Army Ammunition Management System
TDA . . . . . Table of Distribution and Allowances
T3 . . . . Technical grade 3.e.g.. T3 talc
TMDE . . . . . Test, measurement, and diagnostic equipment
TOE . . . . . Table of Organization and Equipment
TPA . . . . Thickened pyrophoric agent (triethyiaiuminum), an incendiary agent
UK . . . . . United Kingdom
UNO . . . . . United Nations Organization
WE . . . . . White Phosphorus

APPENDIX A
DELETED ITEMS

The following items were deleted from TM 43-0001-26-2,29 April 1982, due to obsolescence, lack of Army requirement, or logistics transfer (LOG TRF) to another commodity command.

Item	Action/Date	Status
Adapter, Launcher, Subcaliber, Rocket: M5	MSR 12876011	OBS
Flame Thrower, Portable: M2A1-7	MSR 11906012	OBS
Flame Thrower, Mechanized, Main Armament: APC-Mounted, M10-8	MSR 10906013	OBS
Flame Thrower, Portable: M9-7		OBS
Flame Thrower, Portable: M9A1-7	MSR 06906027	OBS
Generator, Smoke, Mechanical: Pulse Jet: M3A3	MSR 01846010	OBS
Hoisting Unit, Tripod, Drum: M1	MSR 08876018	OBS
Service Unit, Flame Thrower, Tracked Vehicle Mounted: M45	MSR 11906011	OBS
Service Unit, Flame Thrower, Truck Mounted: M4A2	MSR 10906014/6015	OBS

INDEX

	Page
Abbreviations and Symbols	Glossary 1
Adapter, Bomb Cluster: 750-lb, M30	1-5
Adapter, Line Filling, One-Ton Container: M1	5-3
Apparatus, Filling, Field, Land Mine: M2	5-5
Beam, Hoisting, Liquid Gas Tank: M1	5-7
Canister Cluster, Riot Control Agent: Tactical CS, 50-Pound, M158	1-3
Capsule, Riot Control Agent: AS	7-5
Cartridge, 5.56-mm, Blank: M755	3-13
Chemical Agent, Mustard Simulant: MR	7-7
Chemical Agent Symbols	Glossary 1
Cluster, Bomb: Incapacitating, BZ, 750-Pound, M43	1-5
Cluster, Generator: Incapacitating, BZ, 175-Pound, M44	1-7
Compressor, Reciprocating: Flame Thrower Service Unit, M6	5-19; 5-20
Compressor Unit, Reciprocating: Flame Thrower, 3 1/2-CFM, AN-M4, AN-M4B, AN-M4C, and AN-M4D	5-9
Disperser and Riot Control Agent, Manually Carried: CSX, M32 and Carrier	3-5
Disperser and Riot Control Agent, Manually Carried: CR, M36 and Carrier	3-3
Disperser, Riot Control Agent, Helicopter or Vehicle Mounted: M5	3-7
Disperser, Riot Control Agent, Portable: M3	3-11
Disperser, Riot Control Agent, Portable: M33	3-9
Disperser, Riot Control Agent, Portable: M33A1	3-9
Expendable Items	Glossary 1
Federal Supply Classes Included	ii
2-Ethyl-Hexanoic Acid (MIL-E-50008) Peptizer	2-12
Fuze, Smoke Pot: Electric, M209	4-3
Fuze, Smoke Pot: M208	4-21
Generator, Smoke, Mechanical: Pulse Jet, M157	4-6.3
Generator, Smoke, Mechanical: Pulse Jet, M3A4	4-6.1
Gun, Portable Flame Thrower: M7	2-5; 2-7
Gun, Portable, Riot Control Agent: M9	3-7
Ignition Cylinder, Flame Thrower: M1	2-5; 2-7
Incapacitating Agent, BZ	1-5; 1-7
Launcher, Grenade, Smoke: HC, M226	4-8.5
Launcher, Grenade, Smoke: HC and WP, M176	4-8.1
Launcher, Grenade, Smoke: Screening, RP M239	4-7
Launcher, Grenade, Smoke: Screening, RP M243	4-9
Launcher, Grenade, Smoke: Screening, RP, M250	4-11
Launcher, Grenade, Smoke: Screening, RP, M257	4-13
Launcher, Grenade, Smoke: Screening, RP, M259	4-14.1
Launcher, Projectile, Liquid, Airburst:: M267	4-8.3
Launcher, Projectile, 64-mm: Riot Control, M234	3-13
Launcher, Rocket: 68-mm, 4 Tube, M202	2-9
Launcher, Rocket: 66-mm, 4 Tube, M202A1	2-9
Mechanism, Valve Replacement: M1	5-13
Mount, Fog Oil Drum: M3	4-15
Mount, Smoke Generator: M2	4-5
Mount, Smoke Generator Assembly: M2	4-5; 4-16.1
Mounting Kit, Smoke Generator: M284	4-16.3
Purpose	ii
Projectile, 155 Millimeter GB2, M687	2-10.1
Riot Control Agent: CR Solution	3-15
Riot Control Agent: CS1	3-17
Riot Control Agent: CS2	3-19
Service Kit, Portable Flame Thrower, Riot Control Agent Disperser: M27	5-17
Service Kit, Portable Riot Control Agent Disperser: M254	5-15

Page

Simulator, Projectile Airburst,
Liquid: M9 .....7-8.1
Smoke Generating Subsystem,
Helicopter: M52.....4-17
Smoke Pot: Floating, HC, M4A2 4-19
Smoke Pot: Floating, Screening, TA,
Practice, M8.....4-27
Smoke Pot: Floating, SGF2,
AN-M7A1 4-21
Smoke Pot: HC, 10-Pound, M1.....4-23
Smoke Pot: HC, 30-Pound, ABC-M5 4-25
Talc, Technical: T3.....7-9

Page

Tank, Liquid Gas: One-Ton, Type A
(Container).....5-4; 5-7;
5-13; 5-24
Tank, Liquid Gas: One-Ton, Type D
(Container).....5-4; 5-7;
5-13; 5-24
Test Set, Flame Thrower Riot Control
Agent Disperser, Hydrostatic-and-
Volumetric: 6000 PSI, M5 6-3
Thickening Compound, Flame
Fuel: M4.....2-11
Wrench, Valve Removing: M1.....5-23
Wrench, Valve Removing: M2.....5-23

By Order of the Secretary of the Army

E. C. MEYER
General, United States Army
Chief of Staff

Official:

ROBERT M. JOYCE
Brigadier General, United States Army
The Adjutant General

DISTIUBUTION:

To be distributed in accordance with DA Form 12-28, requirements for General Information Applicable to All. Organizations that have a chemical mission.

*U.S. Government Prlntlng Office: 1993- 342-421/63377

RECOMMENDED CHANGES TO EQUIPMENT TECHNICAL PUBLICATIONS

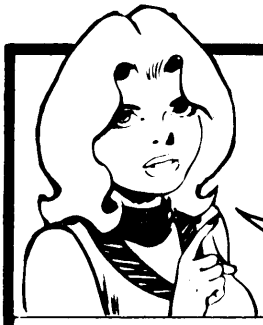

THEN...JOT DOWN THE DOPE ABOUT IT ON THIS FORM, CAREFULLY TEAR IT OUT, FOLD IT AND DROP IT IN THE MAIL!

SOMETHING WRONG WITH THIS PUBLICATION?

FROM: (PRINT YOUR UNIT'S COMPLETE ADDRESS)
Your mailing address

DATE SENT
Date you filled out this form

PUBLICATION NUMBER	PUBLICATION DATE	PUBLICATION TITLE
TM 43-0001-26-2	29 April 1982	Army Equipment Data Sheets, Chemical Weapons and Munitions

BE EXACT...PIN-POINT WHERE IT IS

PAGE NO.	PARA-GRAPH	FIGURE NO.	TABLE NO.
7-3			

IN THIS SPACE TELL WHAT IS WRONG AND WHAT SHOULD BE DONE ABOUT IT:

THE NOMENCLATURE FOR "CLIP, SUBCALIBER, ROCKET, PRACTICE, M5" HAS BEEN CHANGED TO ADAPTER, LAUNCHER, SUBCALIBER ROCKET: M5. REASON: ARMY MASTER DATA FILE REVISION.

NOTE TO THE READER:

Your comments will go directly to the writer responsible for this manual, who will prepare the reply that is returned to you. To help the evaluation of your recommendations, please explain the reason for each of your recommendations, unless the reason is obvious.

All comments will be appreciated and will be given immediate attention. Handwritten comments are acceptable.

For your convenience, blank "tear out" forms, preprinted, addressed, and ready to mail, are included in this manual.

SAMPLE

PRINTED NAME, GRADE OR TITLE AND TELEPHONE NUMBER
JOHN SMITH, S.SGT. 793/XXXX

SIGN HERE John Smith

DA FORM 1 JUL 79 2028-2

PREVIOUS EDITIONS ARE OBSOLETE.

P.S. --IF YOUR OUTFIT WANTS TO KNOW ABOUT YOUR RECOMMENDATION MAKE A CARBON COPY OF THIS AND GIVE IT TO YOUR HEADQUARTERS.

TEAR ALONG DOTTED LINE

RECOMMENDED CHANGES TO EQUIPMENT TECHNICAL PUBLICATIONS

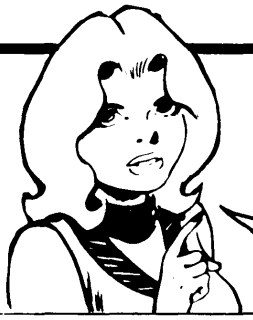

THEN...JOT DOWN THE DOPE ABOUT IT ON THIS FORM, CAREFULLY TEAR IT OUT, FOLD IT AND DROP IT IN THE MAIL!

SOMETHING WRONG WITH THIS PUBLICATION?

FROM: (PRINT YOUR UNIT'S COMPLETE ADDRESS)

DATE SENT

PUBLICATION NUMBER	PUBLICATION DATE	PUBLICATION TITLE
TM 43-0001-26-2	29 Apr 82	Army Equipment Data Sheets, Chemical Weapons and Munitions

BE EXACT...PIN-POINT WHERE IT IS

PAGE NO.	PARA-GRAPH	FIGURE NO.	TABLE NO.

IN THIS SPACE TELL WHAT IS WRONG AND WHAT SHOULD BE DONE ABOUT IT:

PRINTED NAME, GRADE OR TITLE, AND TELEPHONE NUMBER

SIGN HERE

DA FORM 1 JUL 79 **2028-2**

PREVIOUS EDITIONS ARE OBSOLETE.

P.S. --IF YOUR OUTFIT WANTS TO KNOW ABOUT YOUR RECOMMENDATION MAKE A CARBON COPY OF THIS AND GIVE IT TO YOUR HEADQUARTERS.

TEAR ALONG DOTTED LINE

REVERSE OF DA FORM 2028-2

FILL IN YOUR UNIT'S ADDRESS

FOLD BACK

DEPARTMENT OF THE ARMY

_____

_____

TEAR ALONG DOTTED LINE

Commander
US Army Armament Materiel
Readiness Command
ATTN: DRSAR-MAS-C
Aberdeen Proving Ground, MD 21010

THE METRIC SYSTEM AND EQUIVALENTS

'NEAR MEASURE

. Centimeter = 10 Millimeters = 0.01 Meters = 0.3937 Inches
1 Meter = 100 Centimeters = 1000 Millimeters = 39.37 Inches
1 Kilometer = 1000 Meters = 0.621 Miles

'VEIGHTS

Gram = 0.001 Kilograms = 1000 Milligrams = 0.035 Ounces
1 Kilogram = 1000 Grams = 2.2 lb.
1 Metric Ton = 1000 Kilograms = 1 Megagram = 1.1 Short Tons

LIQUID MEASURE

1 Milliliter = 0.001 Liters = 0.0338 Fluid Ounces
1 Liter = 1000 Milliliters = 33.82 Fluid Ounces

SQUARE MEASURE

1 Sq. Centimeter = 100 Sq. Millimeters = 0.155 Sq. Inches
1 Sq. Meter = 10,000 Sq. Centimeters = 10.76 Sq. Feet
1 Sq. Kilometer = 1,000,000 Sq. Meters = 0.386 Sq. Miles

CUBIC MEASURE

1 Cu. Centimeter = 1000 Cu. Millimeters = 0.06 Cu. Inches
1 Cu. Meter = 1,000,000 Cu. Centimeters = 35.31 Cu. Feet

TEMPERATURE

5/9(°F - 32) = °C
212° Fahrenheit is evuivalent to 100° Celsius
90° Fahrenheit is equivalent to 32.2° Celsius
32° Fahrenheit is equivalent to 0° Celsius
9/5C° + 32 =°F

APPROXIMATE CONVERSION FACTORS

TO CHANGE	TO	MULTIPLY BY
Inches	Centimeters	2.540
Feet	Meters	0.305
Yards	Meters	0.914
Miles	Kilometers	1.609
Square Inches	Square Centimeters	6.451
Square Feet	Square Meters	0.093
Square Yards	Square Meters	0.836
Square Miles	Square Kilometers	2.590
Acres	Square Hectometers	0.405
Cubic Feet	Cubic Meters	0.028
Cubic Yards	Cubic Meters	0.765
Fluid Ounces	Milliliters	29.573
ıts	Liters	0.473
arts	Liters	0.946
allons	Liters	3.785
Ounces	Grams	28.349
Pounds	Kilograms	0.454
Short Tons	Metric Tons	0.907
Pound-Feet	Newton-Meters	1.356
Pounds per Square Inch	Kilopascals	6.895
Miles per Gallon	Kilometers per Liter	0.425
Miles per Hour	Kilometers per Hour	1.609

TO CHANGE	TO	MULTIPLY BY
Centimeters	Inches	0.394
Meters	Feet	3.280
Meters	Yards	1.094
Kilometers	Miles	0.621
Square Centimeters	Square Inches	0.155
Square Meters	Square Feet	10.764
Square Meters	Square Yards	1.196
Square Kilometers	Square Miles	0.386
Square Hectometers	Acres	2.471
Cubic Meters	Cubic Feet	35.315
Cubic Meters	Cubic Yards	1.308
Milliliters	Fluid Ounces	0.034
Liters	Pints	2.113
Liters	Quarts	1.057
'ers	Gallons	0.264
.ms	Ounces	0.035
.ograms	Pounds	2.205
Metric Tons	Short Tons	1.102
Newton-Meters	Pounds-Feet	0.738
Kilopascals	Pounds per Square Inch	0.145
'lometers per Liter	Miles per Gallon	2.354
›meters per Hour	Miles per Hour	0.621

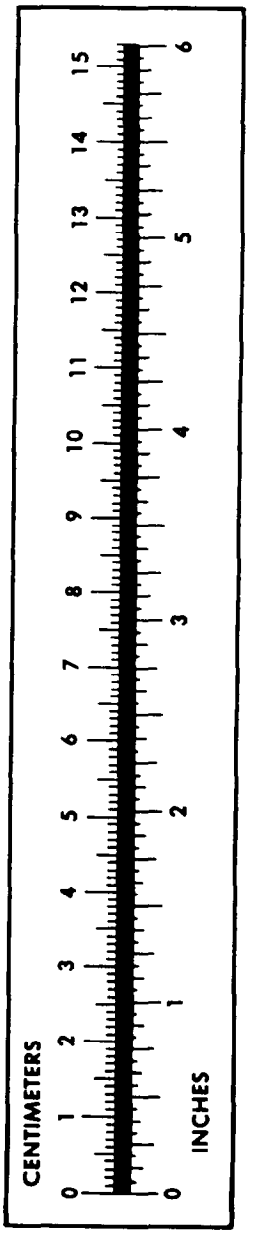

PIN: 050911-000