TM 9-3305

TECHNICAL MANUAL

PRINCIPLES OF ARTILLERY WEAPONS

HEADQUARTERS, DEPARTMENT OF THE ARMY

4 MAY 1981

Technical Manual
No. 9-3305

HEADQUARTERS
DEPARTMENT OF THE ARMY
Washington, DC, 4 May 1981

PRINCIPLES OF ARTILLERY WEAPONS

REPORTING ERRORS AND RECOMMENDING IMPROVEMENTS
You can help improve this manual. If you find any mistakes or if you know of a way to improve the procedures, please let us know. Mail your letter, DA Form 2028 (Recommended Changes to Publications and Blank Forms), or DA Form 2028-2, located in the back of this manual, direct to: Commander, US Army Armament Materiel Readiness Command, ATTN: DRSAR-MAS, Rock Island, IL 61299. A reply will be furnished to you.

		Para	Page
PART ONE. GENERAL			
CHAPTER	**1. INTRODUCTION**	1-1	1-1
	2. HISTORY OF DEVELOPMENT		
Section	I. General	2-1	2-1
	II. Development of United States Cannon Artillery	2-8	2-5
	III. Development of Rockets and Guided Missiles	2-11	2-21
CHAPTER	**3. CLASSIFICATION OF CURRENT FIELD ARTILLERY WEAPONS**		
Section	I. General	3-1	3-1
	II. Current Field Artillery Weapons	3-4	3-1
PART TWO. THECANNON			
CHAPTER	**4. INTRODUCTION**		
Section	I. General	4-1	4-1
	II. Barrel Assembly	4-3	4-1
	III. Breech Mechanism	4-9	4-8
CHAPTER	**5. LOADING AND RAMMING MECHANISM**		
Section	I. Hand Loading and Ramming Devices	5-1	5-1
	II. Power Loading and Ramming Mechanism	5-2	5-2
CHAPTER	**6. RECOIL MECHANISM**		
Section	I. General	6-1	6-1
	II. Basic Principles of Operation	6-3	6-2
CHAPTER	**7. CARRIAGE AND MOUNT**		
Section	I. General	7-1	7-1
	II. Cannon Support Components	7-2	7-2

*This manual supersedes TM 9-3305-1, 14 November 1956.

		Para	Page
Section	III. Equilibrator	7-7	7-3
	IV. Elevating Mechanism	7-11	7-10
	V. Traversing Mechanism	7-14	7-13
	VI. Axle and Equalizer	7-17	7-16
	VII. Firing Support and Retractable Suspension System	7-19	7-17
	VIII. Trail and Shields	7-22	7-20
	IX. Brakes	7-24	7-25

PART THREE. GUIDED MISSILE SYSTEMS

CHAPTER 8. THE LANCE AND PERSHING GUIDED MISSILE SYSTEMS

Section	I. General	8-1	8-1
	II. The Lance Guided Missile System	8-2	8-1
	III. The Pershing Guided Missile System	8-6	8-8
APPENDIX	REFERENCES		A-1
	ALPHABETICAL INDEX		Index 1

LIST OF ILLUSTRATIONS

Figure	Title	Page
2-1	Catapult	2-1
2-2	Early carriage	2-2
2-3	Early rifled cannons	2-3
2-4	Civil War cannon	2-4
2-5	French 75-mm gun, model of 1897	2-4
2-6	6-inch gun on barbette carriage	2-5
2-7	16-inch barbette carriage in casemate	2-5
2-8	American 75-mm gun, model of 1916	2-6
2-9	French 155-mm gun (Filloux)	2-6
2-10	French 155-mm howitzer (Schneider)	2-6
2-11	M1 4.5-inch gun on M1 carriage	2-7
2-12	Ml 155-mm gun on M2 (Long Tom) carriage	2-8
2-13	M1 8-inch gun on M2 carriage	2-8
2-14	M85 280-mm gun	2-9
2-15	M1A1 75-mm pack howitzer on M1 (M1 16) carriage	2-9
2-16	M2A1 105-mm howitzer on M2 (M101) carriage	2-10
2-17	M1 155-mm howitzer on M1 (M114) carriage	2-10
2-18	M1 8-inch howitzer on M1 (M1 15) carriage	2-11
2-19	M1 240-mm howitzer on M2 carriage	2-11
2-20	M12 motor carriage 155-mm gun	2-12
2-21	M40 motor carriage 155-mm gun	2-13
2-22	M53 155-mm self-propelled medium gun	2-13
2-23	T93 motor carriage 8-inch gun	2-14
2-24	M37 motor carriage 105-mm howitzer	2-14
2-25	M7 motor carriage 105-mm howitzer	2-14
2-26	M8 105-mm self-propelled light howitzer	2-15
2-27	M44 155-mm self-propelled medium howitzer	2-15
2-28	M55 8-inch self-propelled heavy howitzer	2-16
2-29	T92 motor carriage 240-mm howitzer	2-16
2-30	M102 105-mm towed light howitzer	2-17
2-31	M198 155-mm towed medium howitzer	2-17
2-32	M107 175-mm self-propelled field artillery heavy gun	2-18

Figure	Title	Page
2-33	M108 105mm self-propelled light howitzer	2-18
2-34	M109 155-mm self-propelled medium howitzer	2-19
2-35	M109A1 155-mm self-propelled medium howitzer	2-19
2-36	M110 8-inch self-propelled heavy howitzer	2-20
2-37	M110A1 8-inch self-propelled heavy howitzer	2-20
2-38	M1 10A2 8-inch self-propelled heavy howitzer	2-20
2-39	M1 19 4.5-inch multiple rocket launcher	2-22
2-40	Honest John rocket launcher	2-22
2-41	Little John rocket launcher	2-23
2-42	Corporal guided missile	2-23
2-43	Lance guided missile	2-24
2-44	Pershing guided missile	2-24
2-45	Sergeant guided missile	2-25
3-1	M101A1 howitzer	3-1
3-2	M102 howitzer	3-2
3-3	M114A1 howitzer	3-2
3-4	M198 howitzer	3-3
3-5	M108 howitzer	3-3
3-6	M109 howitzer	3-4
3-7	M109A1 howitzer	3-4
3-8	M102 howitzer	3-5
3-9	M110A1 howitzer	3-5
3-10	M 107gun	3-6
3-11	Pershing guided missile	3-6
3-12	Lance guided missile	3-7
4-1	Barrel assembly (cross section)	4-1
4-2	Lands and grooves	4-2
4-3	Projectile with rotating band	4-2
4-4	Rifling-right-hand uniform twist	4-3
4-5	Central bore mounting	4-3
4-6	Recoil slide rail mounting	4-4
4-7	Cradle and sleigh mounting	4-5
4-8	Bore evacuators	4-6
4-9	Bore evacuator operation	4-6
4-10	Muzzle brake	4-7
4-11	Muzzle brake operation	4-7
4-12	Breech mechanism for semifixed ammunition	4-8
4-13	Breech mechanism for separate-loading ammunition	4-8
4-14	Interrupted-screw breechblock	4-8
4-15	Stepped-thread interrupted-screw breechblock	4-9
4-16	Horizontal sliding-wedge breechblock	4-9
4-17	Vertical sliding-wedge breechblock	4-9
4-18	Sliding-wedge breechblock operation41	4-10
4-19	Manual carrier breech operating mechanism 41	4-10
4-20	Counterbalance mechanism	4-11
4-21	Semiautomatic carrier breech operating mechanism	4-11
4-22	Opening and closing the breech (semiautomatic carrier breech operating mechanism)	4-12
4-23	Horizontal sliding-wedge breech operating mechanism	4-13
4-24	Extractor	4-13
4-25	Extracting a cartridge case	4-14
4-26	Vertical sliding-wedge breech operating mechanism	4-14
4-27	M13 firing mechanism	4-15
4-28	Continuous-pull firing mechanism operation (1 of 2)	4-16
4-28	Continuous-pull firing mechanism operation (2 of 2)	4-17

Figure	Title	Page
4-29	M35 firing mechanism	4-18
4-30	Inertia firing mechanism	4-18
4-31	Inertia firing mechanism operation	4-19
4-32	Percussion-hammer firing mechanism	4-20
4-33	Percussion-hammer firing mechanism operation	4-20
4-34	Obturator spindle, breechblock, and carrier	4-21
4-35	Obturator spindle components	4-21
4-36	Obturator operation.	4-22
5-1	Hand loading and ramming for weapons firing semifixed ammunition	5-1
5-2	Hand loading and ramming for weapons firing separate-loading ammunition	5-1
5-3	Loader and rammer mechanism	5-2
5-4	Rammer mechanism	5-2
5-5	Loader and rammer mechanism (stowed position)	5-3
5-6	Loader and rammer mechanism components	5-3
5-7	Loader and rammer mechanism controls	5-4
5-8	Hand pump	5-5
5-9	Handcranks	5-5
5-10	Rammer control manifold	5-6
5-11	Rammer mechanism components	5-7
5-12	Rammer mechanism controls	5-8
5-13	Latch switch	5-8
5-14	Limiting switch	5-9
5-15	Rammer control box	5-9
5-16	Solenoid	5-9
6-1	Effects of recoil force	6-1
6-2	Throttling grooves	6-3
6-3	Throttling rod	6-3
6-4	Variable recoil	6-4
6-5	Variable recoil throttling rod and throttling grooves	6-4
6-6	Dependent counterrecoil mechanism	6-5
6-7	Independent counterrecoil mechanism	6-6
6-8	Piston-type hydropneumatic recuperator	6-7
6-9	Dash pot counterrecoil buffer	6-8
6-10	Hydraulic spring counterrecoil buffer	6-9
6-11	Respirator or Schindler counterrecoil buffer	6-10
6-12	Spring-type replenisher	6-11
6-13	Nitrogen gas-type replenisher	6-11
7-1	Top and bottom carriages	7-2
7-2	Cradle and sleigh	7-3
7-3	Pull-type spring equilibrator	7-4
7-4	Carriage-mounted pull-type spring equilibrator	7-5
7-5	Pusher-type spring equilibrator (1 of 2)	7-5
7-5	Pusher-type spring equilibrator (2 of 2)	7-6
7-6	Pneumatic equilibrator	7-7
7-7	Hydropneumatic equilibrator (1 of 2)	7-8
7-7	Hydropneumatic equilibrator (2 of 2)	7-9
7-8	Elevating rack and pinion-type elevating mechanism	7-10
7-9	Elevating screw-type elevating mechanism	7-11
7-10	Hydraulic cylinder-type elevating mechanism	7-12
7-11	Hydraulic motor rack and pinion-type elevating mechanism	7-13
7-12	Screw-type traversing mechanism	7-13
7-13	Rack and pinion-type traversing mechanism	7-14
7-14	Carriage traversing-type traversing mechanism	7-15
7-15	Ring gear-type traversing mechanism	7-15
7-16	Axle	7-16
7-17	Bottom carriage (axle).	7-16

Figure	Title	Page
7-18	Equalizer	7-17
7-19	Firing jack	7-18
7-20	Firing platform on the M102 howitzer	7-18
7-21	Firing platform on the M198 howitzer	7-19
7-22	Manual retractable suspension system	7-19
7-23	Hydraulic retractable suspension system	7-20
7-24	Split trail	7-21
7-25	Box trail	7-21
7-26	Lunette	7-22
7-27	Lunette coupled to pintle	7-22
7-28	Fixed spade	7-23
7-29	Detachable spade (1 of 2)	7-23
7-29	Detachable spade (2 of 2)	7-24
7-30	Shields	7-24
7-31	Parking brake	7-25
7-32	Airbrake diaphragm	7-26
8-1	Lance guided missile system on M752 self-propelled launcher	8-1
8-2	Trajectory of Lance missile	8-2
8-3	Lance missile	8-3
8-4	M251 warhead section	8-3
8-5	Missile main assemblage	8-4
8-6	Guidance set	8-4
8-7	Rocket engine system	8-5
8-8	Control surfaces	8-5
8-9	Zero-length launcher	8-6
8-10	Basic launch fixture	8-7
8-11	Mobility kit	8-7
8-12	Pershing guided missile system	8-8
8-13	Pershing missile sections	8-9
8-14	First and second stages	8-10
8-15	Guidance section	8-11
8-16	Operation of guidance section	8-12
8-17	Warhead section	8-13

PART ONE

GENERAL

CHAPTER 1

INTRODUCTION

1-1. Scope.

a. This manual is intended for use in training field artillery personnel in the history and fundamentals of artillery weapons. It discusses only the basic theory and principles underlying the functioning of current field artillery weapons; it does not attempt to discuss the mechanical details or operating procedures that differentiate one model weapon from another. General reference is made to specific models to give an overall picture of the development of field artillery from the ancient ballista to the guided missile.

b. Specific information about ammunition (TM43-0001-28) is not contained in this manual. However, information about ammunition important to the development of particular weapons has been included.

1-2. Cannon Field Artillery Weapons. This manual is devoted primarily to the principles of cannon field artillery weapons. It explains the principles of the major components of these weapons and the application of these components on current field artillery weapons.

1-3. Rockets and Guided Missiles. Since guided missiles are included in the family of field artillery weapons, they are also discussed in this manual.

1-4. References. The appendix contains a list of current references pertaining to field artillery weapons. Detailed information about operation and maintenance of specific weapons can be obtained from applicable technical manuals (DA Pam 310-4).

CHAPTER 2
HISTORY OF DEVELOPMENT

Section I. GENERAL

2-1. Pregunpowder Era. Artillery has had a history of development for over 2000 years.

a. Before the invention of gunpowder, there were two main types of artillery.

(1) Ballista. These mechanical devices, powered by twisted ropes of hair, hide, or sinew, were designed to throw heavy stones or combustible materials. Like modern field guns, the ballista shot low and directly toward the enemy.

(2) Catapult. The catapult (fig 2-1), the howitzer or mortar of its day, could throw a 100-pound stone 600 yards in a high arc.

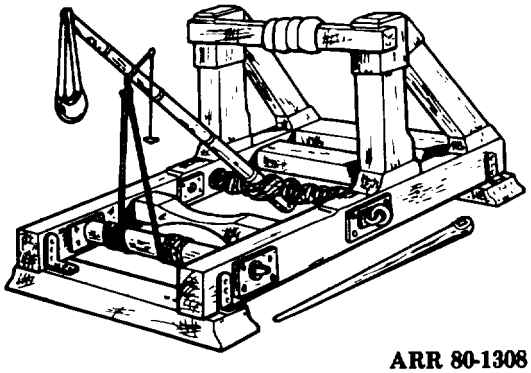

Figure 2-1. Catapult.

b. In the 11th and 12th centuries, the Greeks used a composition known as Greek Fire. It probably consisted of phosphorus, animal fats, and oils and was used to set fire to wooden ships or buildings. In use and effect, Greek Fire was probably similar to jellied gasoline.

2-2. The Invention of Gunpowder. Although many stories have been told about the invention of gunpowder, it is believed that it was invented early in the 13th century in western Europe. Berthold Schwartz, a German monk, and Roger Bacon, an English monk, are both credited with inventing gunpowder.

2-3. Primitive Artillery Using Gunpowder.

a. The Arabian madfaa was the original cannon brought to Western civilization. With this small, mortar-like wooden weapon, the ball rested on the muzzle end until firing of the charge tossed it in the general direction of the enemy.

b. Another primitive cannon, with a narrow neck and flared mouth, fired an iron dart up to 700 yards. The shaft of the dart was wrapped with leather to fit tightly into the neck of the cannon. A red hot bar thrust through a vent ignited the propelling charge. The bottle shape of the weapon perhaps suggested the name, pot de fer (iron jug), given to early cannons. As the cannon developed, the narrow neck probably was enlarged until the "bottle" became a straight tube.

2-4. Smoothbore Cannons.

a. The early artillerist's concept of trajectory was that a projectile traveled in a straight line until its energy was spent. Then the projectile

dropped to the target. The curved path of a projectile moving through the air was not considered in the design of the early weapons. Therefore, beyond pointblank range, the gunner was never sure of hitting the target.

b. From the earliest use of firearms until about he year 1300, weapons were smoothbore. They were made by casting the tube around a core. As cannons evolved, they were cast solid and the bore drilled, improving the uniformity of the piece. One of the earliest recorded uses of such a weapon in warfare is that of an attack on Seville, Spain, in 1247.

c. During the Hundred Years' War (1399-1453), cannons came into general use. The early iron or cast-bronze pieces were very small and fired lead, iron, or stone balls. The cannons were laid directly on the ground, with the muzzles elevated by mounding up the earth. Cumbersome and inefficient, they played little part in battle but were quite useful in a siege.

d. Mohammed II of Turkey used one weapon in his military conquest of Constantinople in 1453. This weapon weighed 19 tons and used gunpowder to hurl a 600-pound stone seven times a day. The usefulness of the weapon was reduced because it took 60 oxen and 200 men to move it. The weapon was responsible, however, for destroying the city walls which had successfully resisted many attacks by other weapons for more than 1000 years.

e. Bombards were very large weapons with barrels made of staves and were hooped like a barrel (from which they got their name). The gunpowder used was weak and barrel pressures were low, but even so, barrels frequently burst.

f. At the beginning of the 15th century, castiron balls were being used. The greater efficiency of the iron ball and the improvements in gunpowder encouraged the building of smaller and stronger guns. Before 1500, the siege gun had been the predominant weapon. Forged-iron cannons for field, garrison, and naval service and then cast-iron and cast-bronze guns were steadily developed. Throughout the 1500's, improvements were made in lightening the enormous weights of the guns and projectiles, as well as finding better ways to move the artillery. An increased knowledge of gunpowder and improvement in casting resulted in the replacement of bombards with lighter cannons in the 16th century.

g. Until about 100 years ago, cannons were simply constructed. They had a cast barrel, a wedge elevating mechanism, and crude wheels and carriage. These weapons were fired by igniting gunpowder with a live fire or match at the touch hole at the breech. As the cannons improved, they were of decreased size and were cast in one piece of cast iron or cast bronze. The casting of trunnions on the gun made elevation and transportation easier.

2-5. Carriages and Mounts.

a. The first cannons were placed on wagons or carriages for transporting. These early carriages (fig 2-2) supported the cannon at the center of balance and at the breech. Adjustments in elevation were made by a wedge under the breech. To move the barrel, it was necessary to move the entire carriage. Large wheels helped move the weapon over the poor roads. The trail absorbed a moderate amount of weapon jump and helped to traverse the piece.

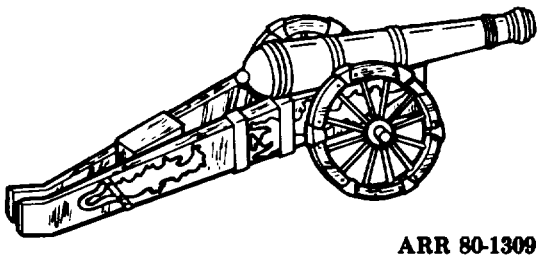

Figure 2-2. Early carriage

b. Mobile artillery came on the field with the cart guns of John Zizka during the Hussite Wars of Bohemia (1418-1424). The French further improved field artillery by using light guns hauled by horses instead of oxen. The maneuverable French guns proved to be an excellent means for breaking up heavy masses of pikemen in the Italian campaigns of the early 1500's. The Germans, under Maximilian I, however, took the armament leadership away from the French with guns that ranged 1500 yards and with men who had earned the reputation of being the best gunners in Europe.

c. Around the year 1525, the Spanish Square of heavily armed pikemen and musketeers began to dominate the battlefield. In the face of musketry, field artillery declined. Although artillery had achieved some mobility, carriages were still cumbersome. To move a heavy cannon, even over good ground, required 23 horses. Ammunition was carried in wheelbarrows and carts or on a man's back. The gunner's pace was the measure of the field artillery speed. Lacking efficient mobility, guns were captured and recaptured with every changing sweep of the battle.

d. Under the Swedish warrior Gustavus Adolphus, artillery began to take its true position on the battlefield in the 17th century. He increased the rapidity of fire by combining the powder charge and the projectile into a single cartridge, doing away with the old method of ladling powder into the gun. Recognizing the need for mobile weapons, he made use of pieces which could be moved by two horses and served by three men. In the past, one cannon for 1000 infantrymen had been standard; Gustavus brought the ratio to six cannons per 1000 men.

e. Throughout the 18th century, artillery remained very clumsy and battles were largely decided by infantry and cavalry. About 1750, Frederick II, King of Prussia, succeeded in developing the first light artillery, used during the Seven Years' War (1756-1763). He used artillery that was light and mobile enough to accompany the army and to be readily maneuvered on the battlefield. The gradual destruction of his veteran infantry made him lean more heavily on artillery. To keep pace with cavalry movements, he developed a horse artillery that moved rapidly along with the cavalry. His field artillery had only light guns and howitzers.

2-6. Rifled Cannons.

a. Straight grooving was applied to small arms as early as 1480. During the 1500's, straight grooving of musket bores was done extensively. Rifling probably evolved from the early observation of feathers on an arrow and from the practical results of cutting channels in a musket to reduce fouling. Then it was found that rifling also improved the accuracy of a shot.

b. Early cannons were not made accurately; their accuracy of fire was correspondingly low. These weapons could not be made better than the tools which produced them, and good machinery capable of boring cannons was not made until 1750. Although rifling had already been applied to small arms, machinery of the necessary accuracy to apply rifling to cannons was not available until about a century later.

c. In 1846, Major Cavelli in Italy and Baron Wahrendorff in Germany independently produced rifled iron breech-loading cannons. The Cavelli gun (view A, fig 2-3) had two spiral grooves which fitted the 1/4-inch projecting lugs of a long projectile. About the same time, a British industrialist, Joseph Whitworth, developed the helical hexagonalbore weapon (view B). This weapon was one of many used during the American Civil War (1861-1865). It was an efficient piece, though subject to easy fouling which made it dangerous.

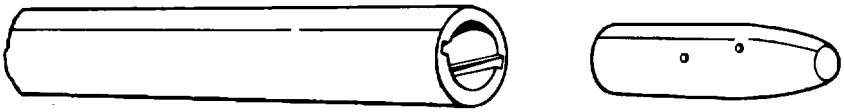

A. STUDDED PROJECTILE AND BORE (CAVELLI)

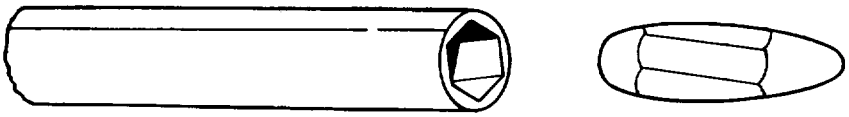

ARR 80-1310

B. HEXAGONAL PROJECTILE AND BORE (WHITWORTH)

Figure 2-3. Early rifled cannons.

d. The American Civil War began with smoothbore muzzle loaders and ended with rifled muzzle loaders (fig 2-4). When these weapons wore out or were captured, smoothbore weapons were replaced with rifled pieces. The Rodman gun is an example of a weapon converted from a smoothbore to a rifled bore. Developed by Captain T. J. Rodman (United States Army Ordnance) in the mid-1800's, this smoothbore weapon was cast around a water- cooled core. Its inner walls solidified first and were compressed by the contraction of the outer metal as it cooled more slowly. By this process, it had much greater strength to resist explosion of the charge. The Rodman smoothbore cannon, cast in 8-, 10-, 15-, and 20-inch calibers, was the best cast- iron ordnance of its time. During and after the Civil War, a number of the 10-inch Rodman smoothbore cannons were converted into 8-inch rifles by enlarging the bore and inserting a grooved steel tube.

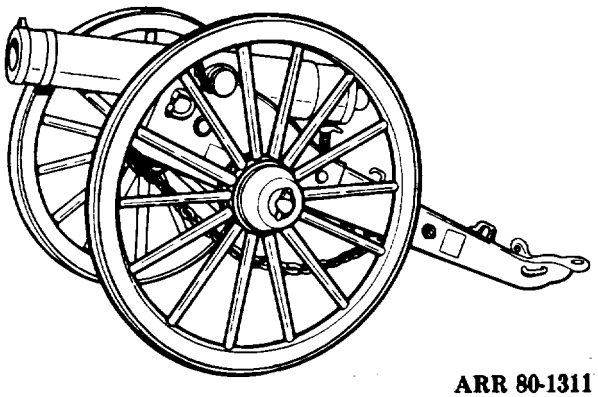

Figure 2-4. Civil War cannon.

2-7. Breech-Loading Cannons.

a. The first successful breech-loading cannon was made less than a century ago. There were some breech-loading cannons made over 400 years ago, but by our standards, they were not satisfactory and were not the forerunners of modern breech-loading cannons.

b. The need for breech-loading was to enable firing and reloading without exposing the gunners to the enemy. The solution of the breech-loading problem depended on finding a mechanism that would seal the propellant gases within the chamber. This was accomplished by using soft metal (brass) cartridge cases for the smaller cannons and more complex expanding asbestos and metal seals for the larger ones. The first cannon that had all the features now in use was the French 75 (fig 2-5). This 75-mm gun, model of 1897, used cased ammunition and had modern sights, a firing mechanism, and a recoil mechanism. It was the backbone of the artillery of the Allied armies in World War I (1914-1918).

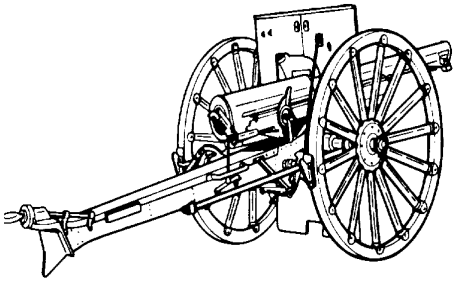

Figure 2-5. French 75-mm gun, model of 1897.

Section II. DEVELOPMENT OF UNITED STATES CANNON ARTILLERY

2-8. Early Development. a. **Fixed Artillery.**

(1) Design characteristics of United States artillery have generally followed those of other nations. Before the Civil War, there was little manufacturing of cannons in this country. At the beginning of that conflict, it became necessary to purchase much of this equipment abroad. There were different models of various sizes of cannons for use in fortifications. These weapons included brass guns, iron guns, and iron howitzers.

(2) A distinctly American development in fixed or harbor-defense artillery was reached early in the 20th century with the adoption of the disappearing carriage. This enabled the gun to rise over a parapet to fire, but was withdrawn by recoil forces behind the parapet for reloading.

(3) Another fixed artillery piece, the barbette carriage (fig 2-6 and 2-7), was a permanently emplaced carriage capable of traversing through large angles, except as limited by the protecting turret or casemate.

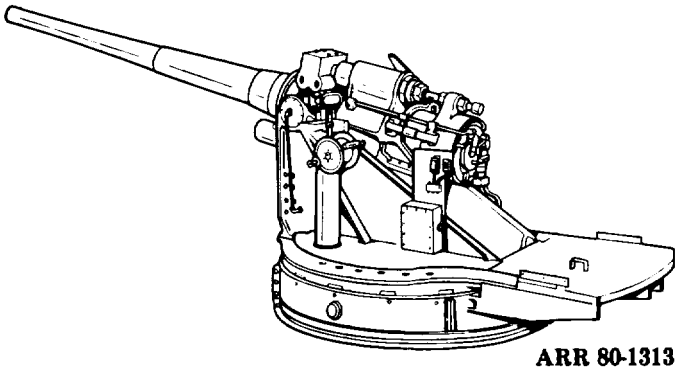

Figure 2-6. 6-inch gun on barbette carriage.

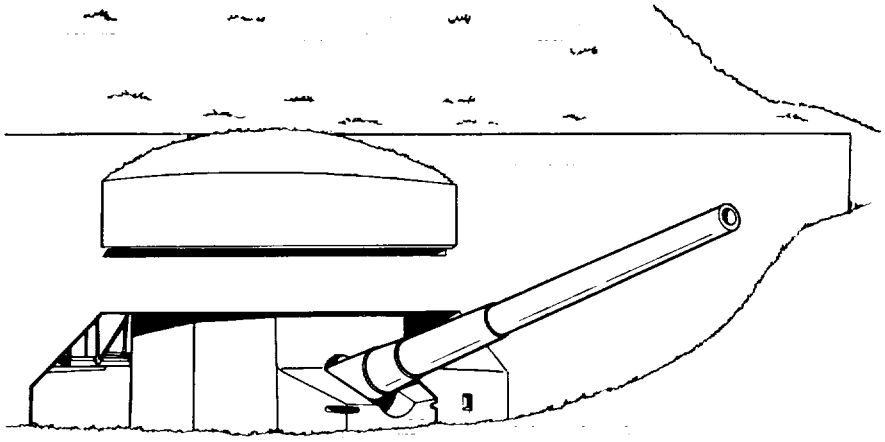

Figure 2-7. 16-inch barbette carriage in casemate.

b. Mobile Artillery. The appearance of the French 75 in 1897 spurred American designers to a series of developments. Many models were made in 3-, 4.7-, 6-, and 8-inch calibers with various carriage and recoil mechanism arrangements. Little money was available, however, to manufacture these guns for issue. Therefore, upon entering World War I in 1917, weapons were adopted for which production facilities existed. The following guns were adopted into the Armed Forces:

(1) The French 75-mm gun, model of 1897.

(2) The American 75-mm gun, model of 1916 (fig 2-8).

(3) The British 75-mm gun, model of 1917.

(4) The French 155-mm gun (Filloux) (fig 2-9), more familiarly known as the G.P.F., after its French name, Grande-e-Puissance Filloux (gun of great power).

(5) The French 155-mm howitzer (Schneider) (fig 2-10).

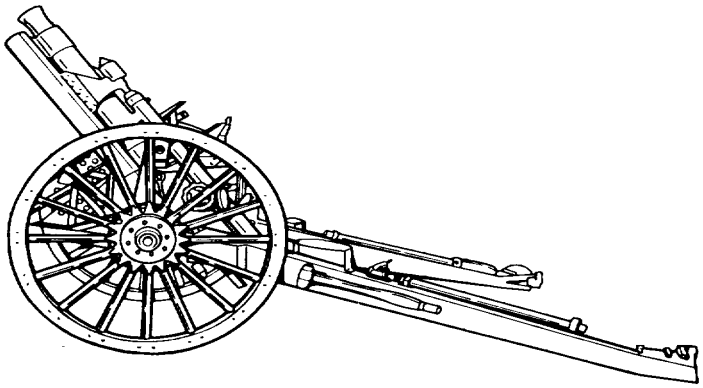

ARR 80-1315

Figure 2-8. American 75-mm gun, model of 1916.

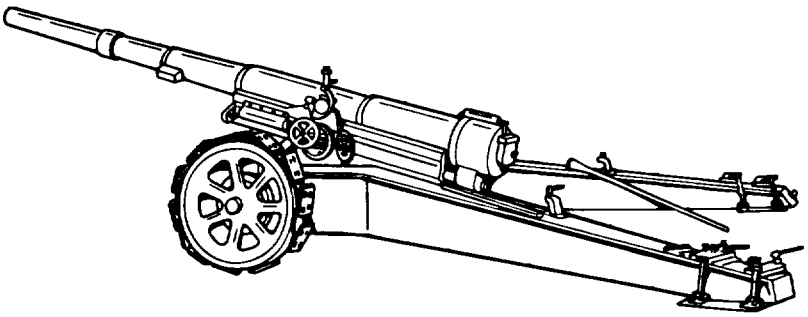

ARR 80-1316

Figure 2-9. French 155-mm gun (Filloux).

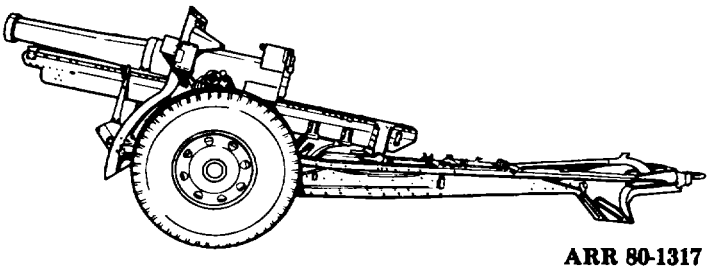

ARR 80-1317

Figure 2-10. French 155-mm howitzer (Schneider).

2-9. Development During World War II.

a. The period between World War I and II brought about very little in the production of new field artillery weapons. With the beginning of World War II, there was a need for modern field artillery weapons, and a large number of new weapons were developed.

b. Modern highways and high-speed trucks brought about the development of artillery weapons that could be towed at relatively high speeds. With the further development of the tank after World War I, artillery weapons were also needed that could travel cross-country over rough and rugged terrain. These requirements brought about the development of a large number of new towed and self-propelled artillery weapons.

(1) The towed weapons are as follows:

(a). Guns.

1. M1 4.5-inch gun on M1 carriage (fig 2-11).

2. M1 155-mm gun on M2 (Long Tom) carriage (fig 2-12).

3. M1 8-inch gun on M2 carriage (fig 2-13).

4. M85 280-mm gun (fig 2-14).

(b) Howitzers.

1. MlA1 75-mm pack howitzer on M1 (M116) carriage (fig 2-15).

2. M2A1 105-mm howitzer on M2 (M101) carriage (fig 2-16).

3. M1 155-mm howitzer on M1 (Ml14) carriage (fig 2-17).

4. M1 8-inch howitzer on M1 (M115) carriage (fig 2-18).

5. M1 240-mm howitzer on M2 carriage (fig 2-19).

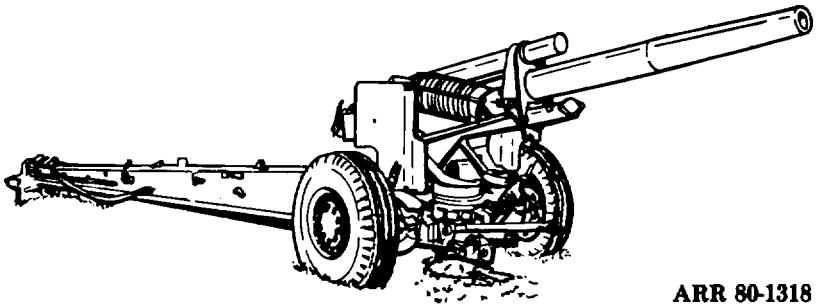

Figure 2-11. M1 4.5-inch gun on M1 carriage.

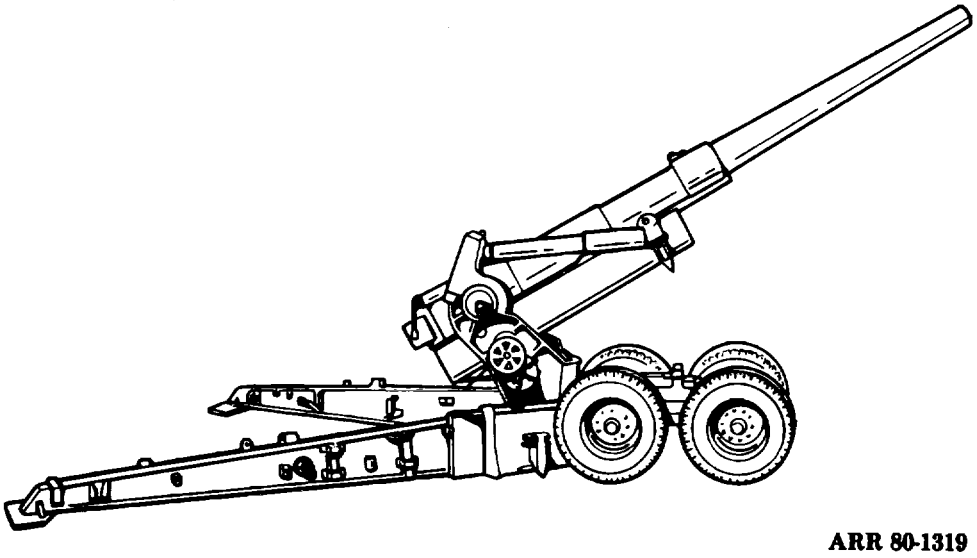

Figure 2-12. M1 155-mm gun on M2 (Long Tom) carriage.

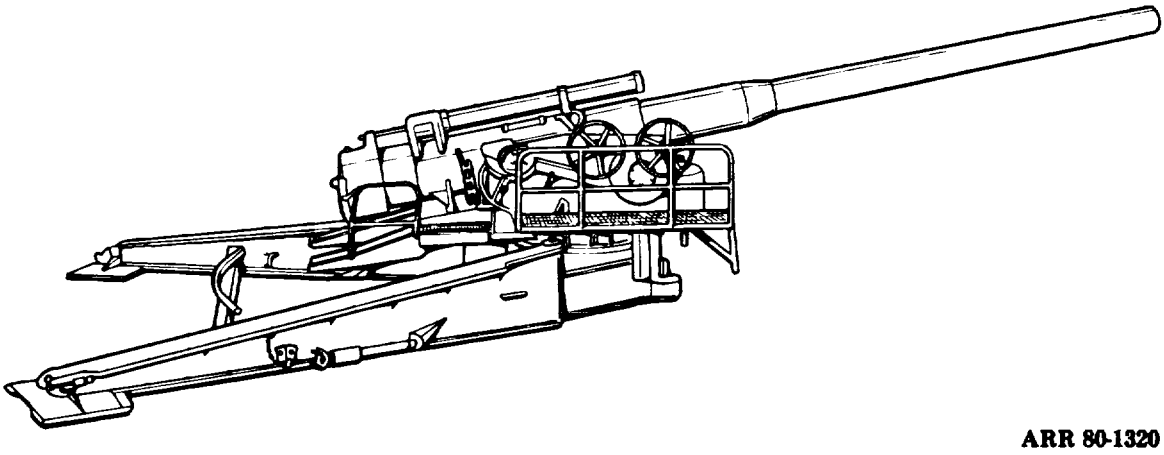

Figure 2-13. M1 8-inch gun on M2 carriage.

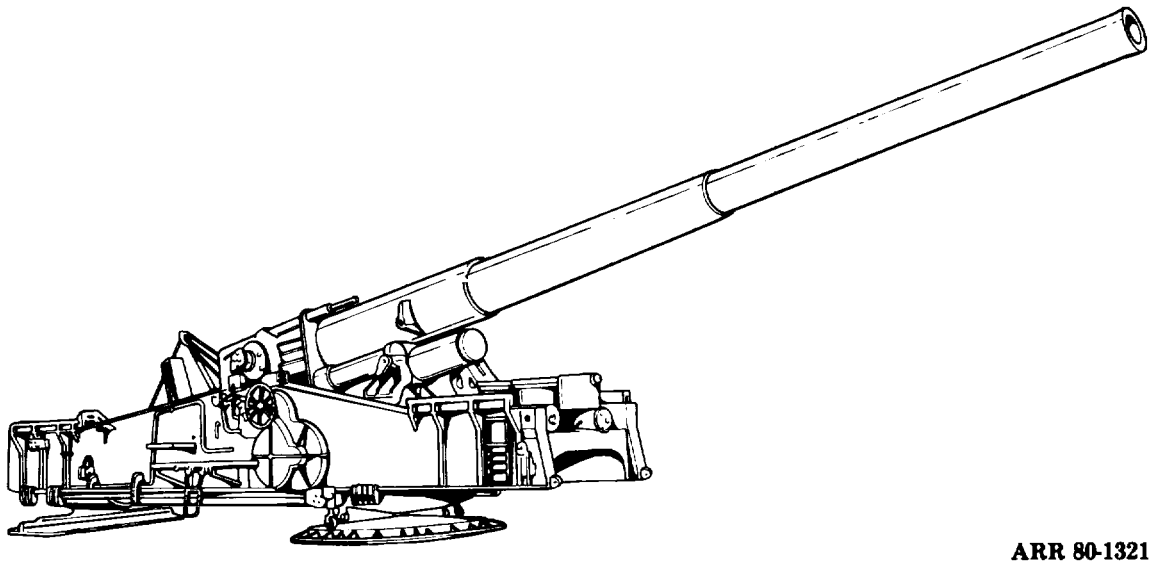

Figure 2-14. M85 280-mm gun.

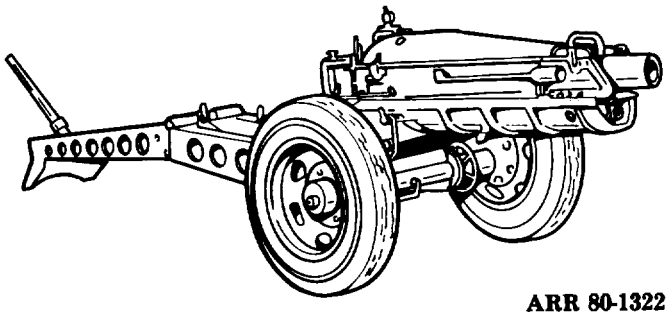

Figure 2-15. MlA1 75-mm pack howitzer on M1 (M116) carriage.

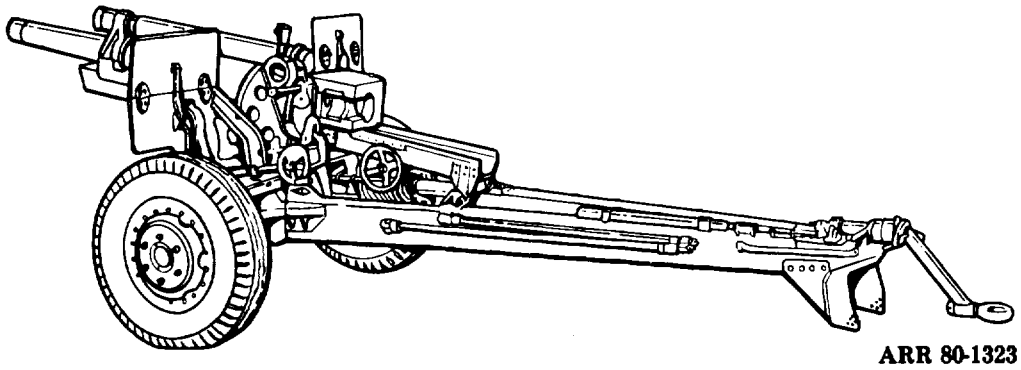

Figure 2-16. M2A1 105-mm howitzer on M2 (M101) carriage.

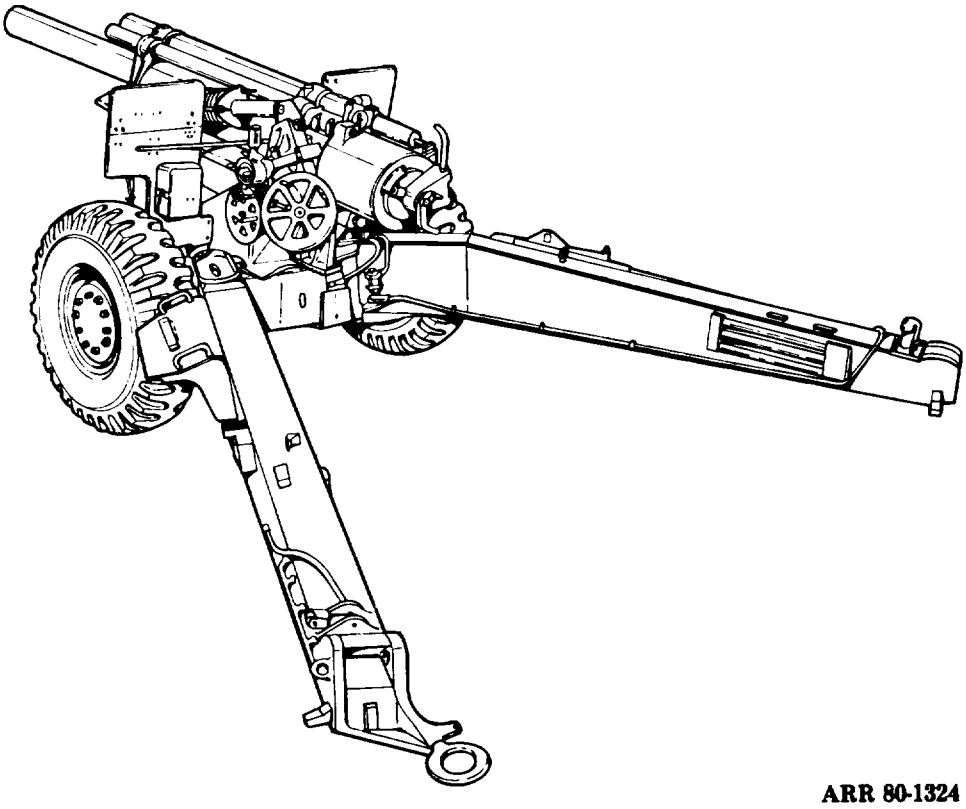

Figure 2-17. M1 155-mm howitzer on M1 (M114) carriage.

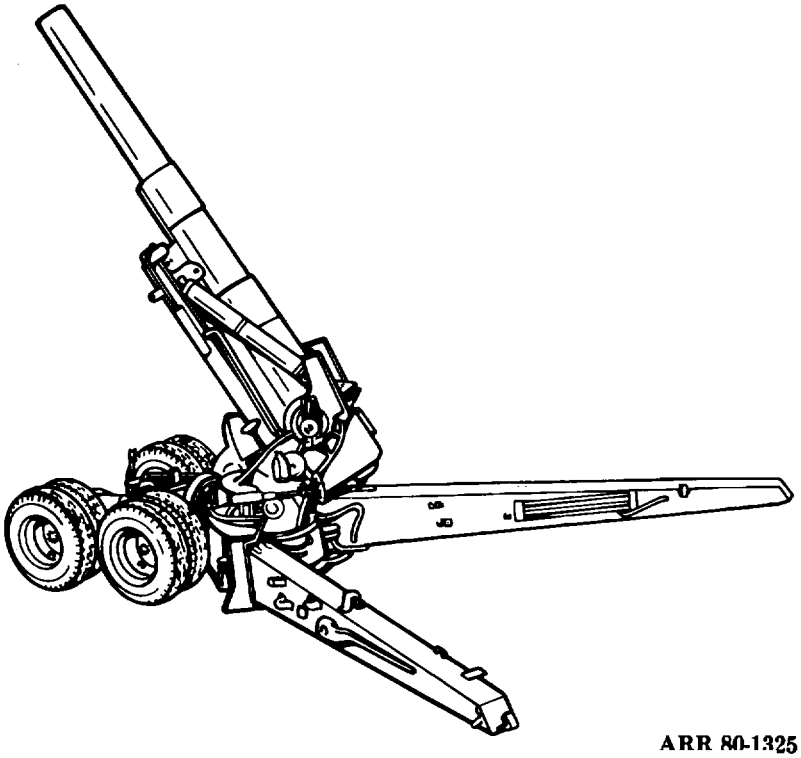

Figure 2-18. M1 8-inch howitzer on M1 (M1 5) carriage.

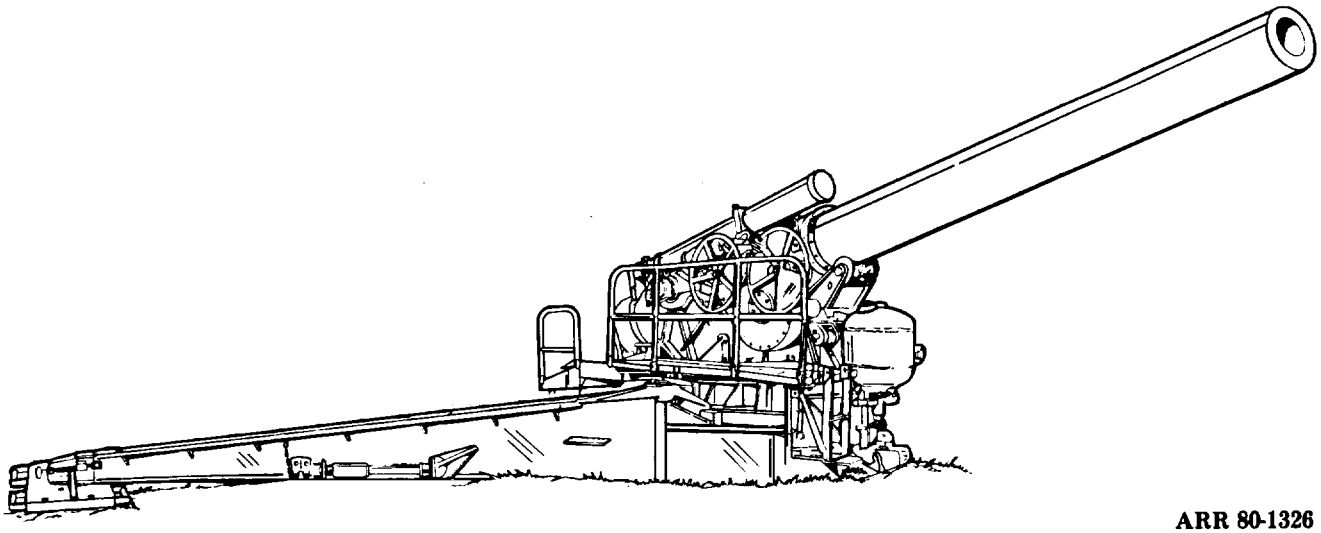

Figure 2-19. M1 240-mm howitzer on M2 carriage.

(2) The self-propelled weapons are as follows:

(a) Guns.

1. M12 motor carriage 155-mm gun (fig 2-20).

2. M40 motor carriage 155-mm gun (fig 2-21).

3. M53 155-mm self-propelled medium gun (fig 2-22).

4. T93 motor carriage 8-inch gun (fig 2-23).

(b) Howitzers.

1. M37 motor carriage 105-mm howitzer (fig 2-24).

2. M7 motor carriage 105-mm howitzer (fig 2-25).

3. M8 105-mm self-propelled light howitzer (fig 2-26).

4. M44 155-mm self-propelled medium howitzer (fig 2-**27).**

5. M55 8-inch self-propelled heavy howitzer (fig 2-28).

6. T92 motor carriage 240-mm howitzer (fig 2-29)

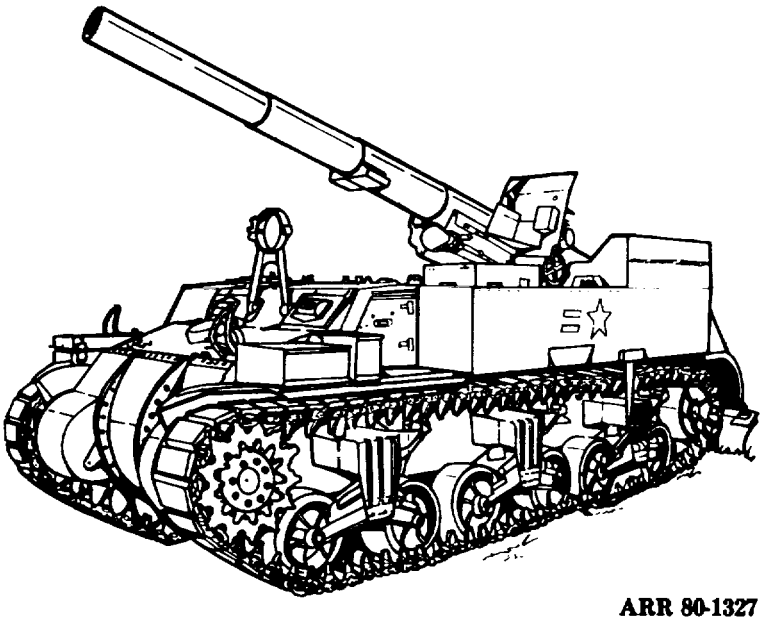

Figure 2-20. M12 motor carriage 155-mm gun.

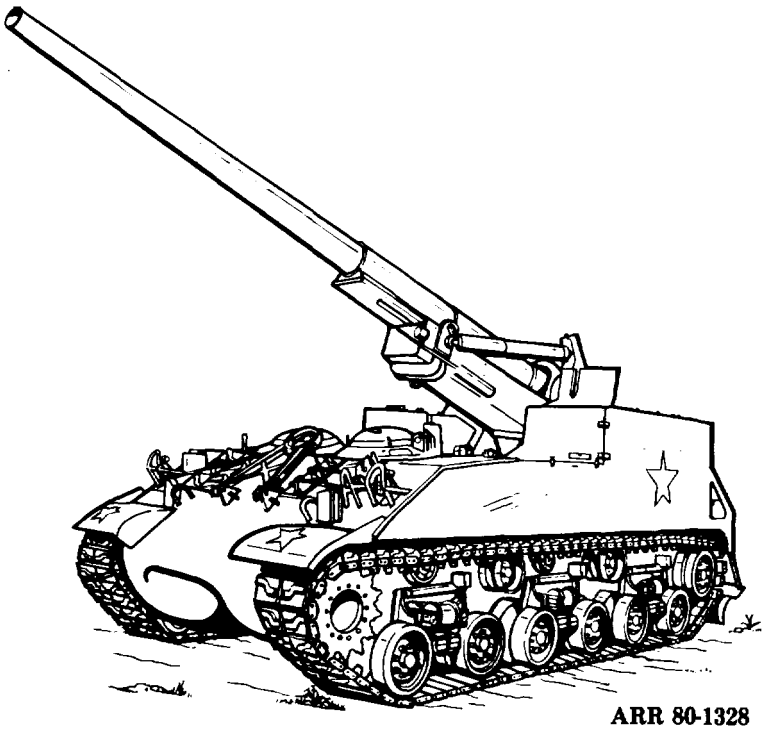

Figure 2-21. M40 motor carriage 155-mm gun.

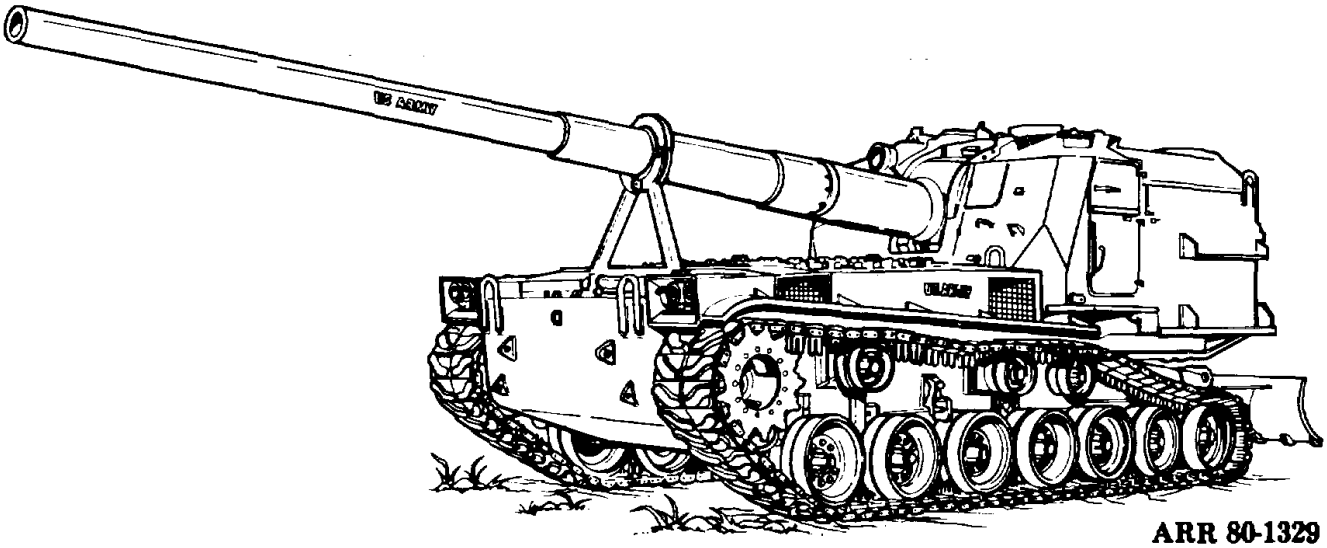

Figure 2-22. M53 155-mm self-propelled medium gun.

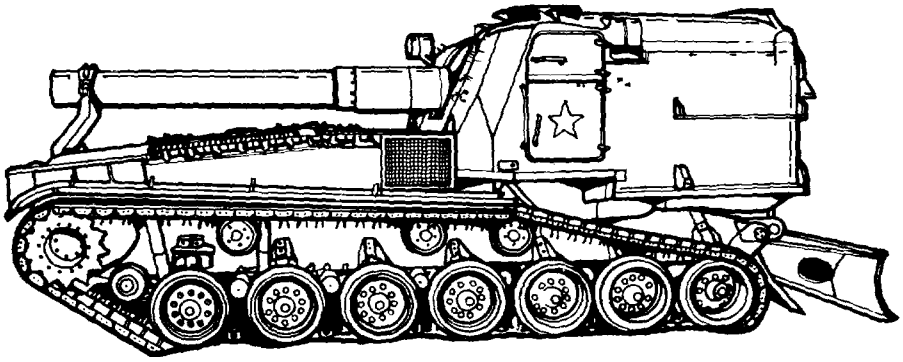

ARR 80-1330

Figure 2-23. T93 motor carriage 8-inch gun.

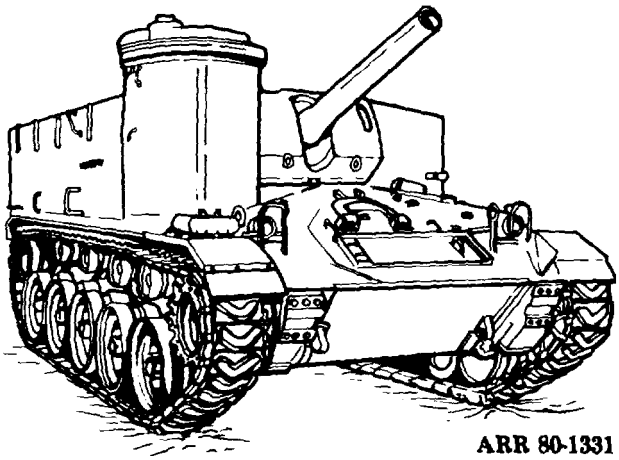

ARR 80-1331

Figure 2-24. M37 motor carriage 105-mm howitzer.

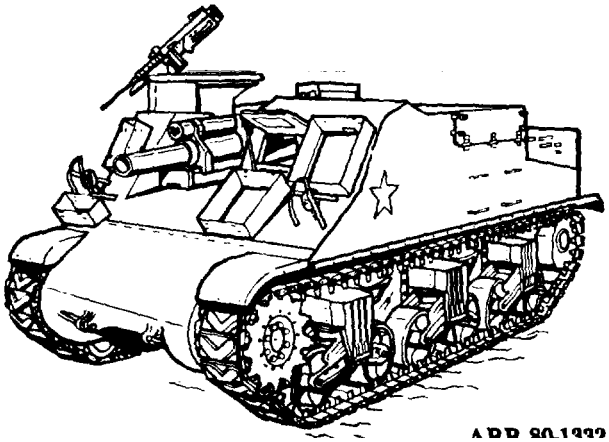

Figure 2-25. M7 motor carriage 105-mm howitzer.

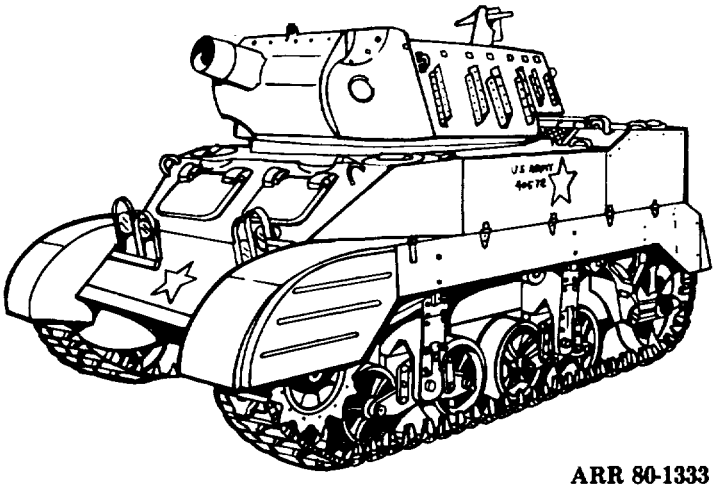

Figure 2-26. M8 105-mm self-propelled light howitzer.

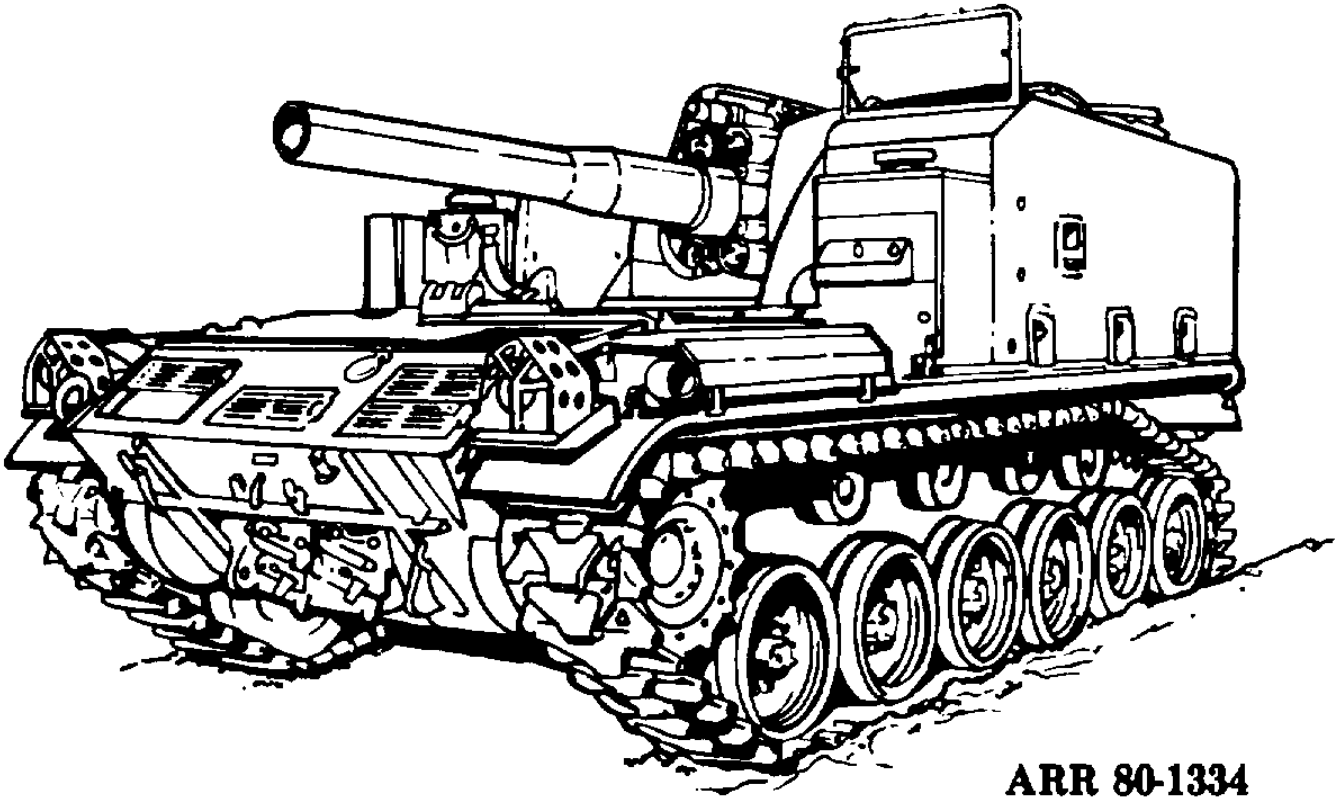

Figure 2-27. M44 155-mm self-propelled medium howitzer.

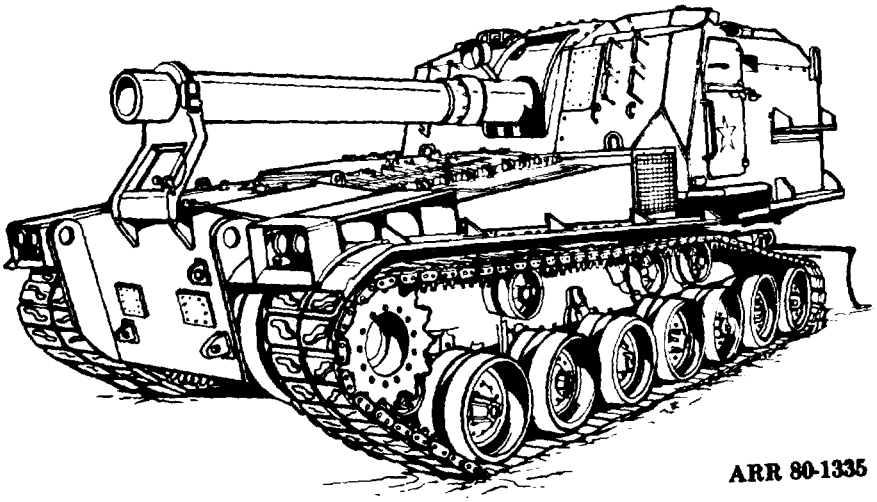

Figure 2-28. M55 8-inch self-propelled heavy howitzer.

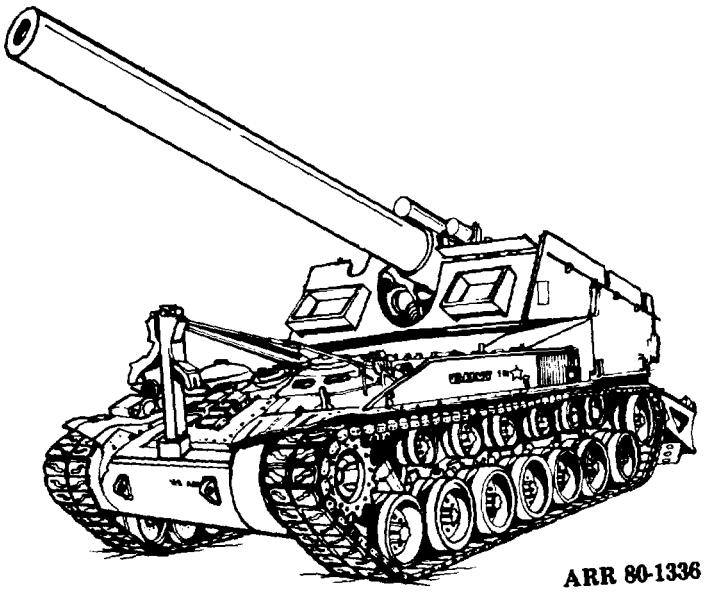

Figure 2-29. T92 motor carriage 240-mm howitzer.

2-10. Development Since the Korean Conflict. Weapons developed since the Korean conflict include towed weapons with a 6400-mil traverse and weapons with an extended range capability. For many years, all self-propelled field artillery weapons were mounted on converted tank chassis. As these older self-propelled weapons became obsolete, a new family of self-propelled weapons was introduced. These chassis were designed specifically for field artillery weapons.

a. The towed weapons are as follows:

(1) M102 105-mm towed light howitzer (fig 2-30).
(2) M198 155-mm towed medium howitzer (fig 2-31).

b. The self-propelled weapons are as follows:

(1) Gun. M107 175-mm self-propelled field artillery heavy gun (fig 2-32).

(2) Howitzers.

(a) M108 105-mm self-propelled light howitzer (fig 2-33).

(b) M109 155-mm self-propelled medium howitzer (fig 2-34).

(c) M109A1 155-mm self-propelled medium howitzer (fig 2-35).

(d) M110 8-inch self-propelled heavy howitzer (fig 2-36).

(e) M11OA1 8-inch self-propelled heavy howitzer (fig 2-37).

(f) MllOA2 8-inch self-propelled heavy howitzer (fig 2-38).

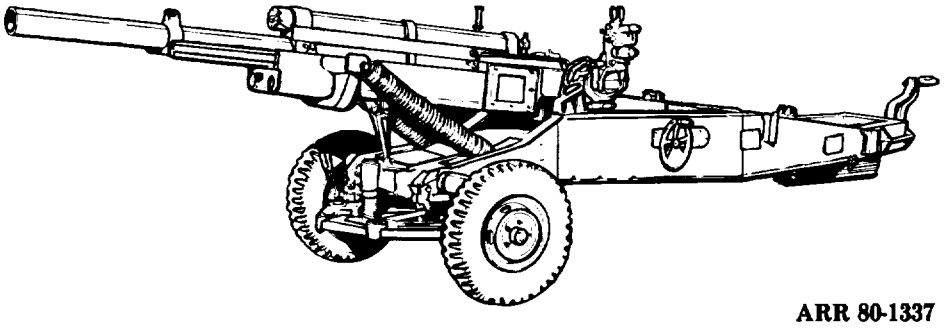

Figure 2-30. M102 105-mm towed light howitzer.

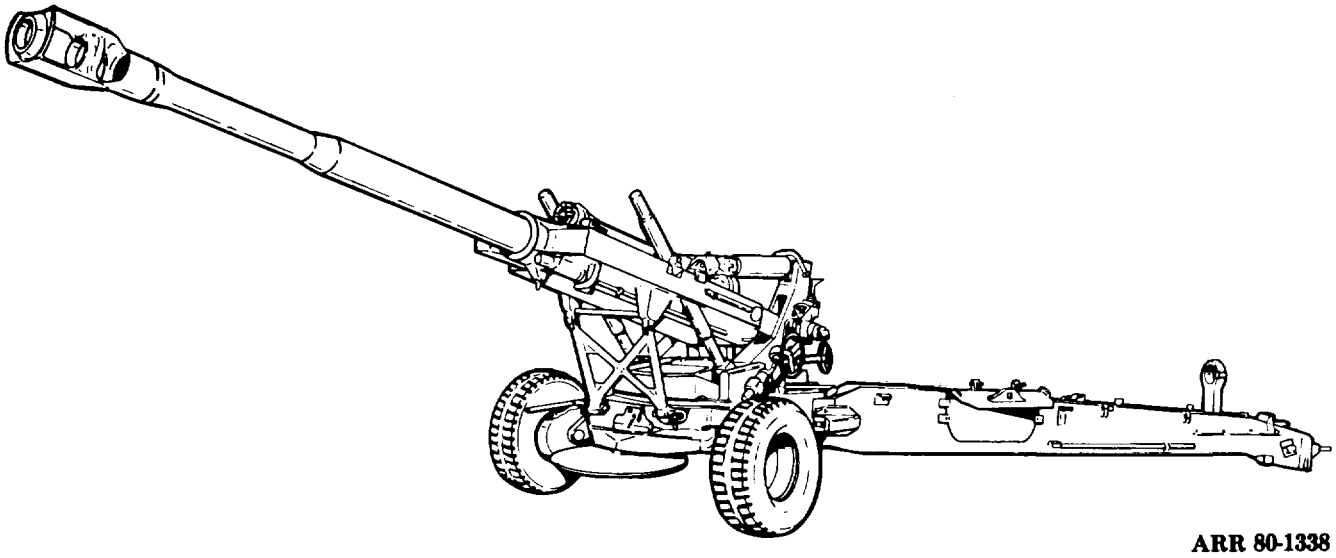

Figure 2-31. M198 155-mm towed medium howitzer.

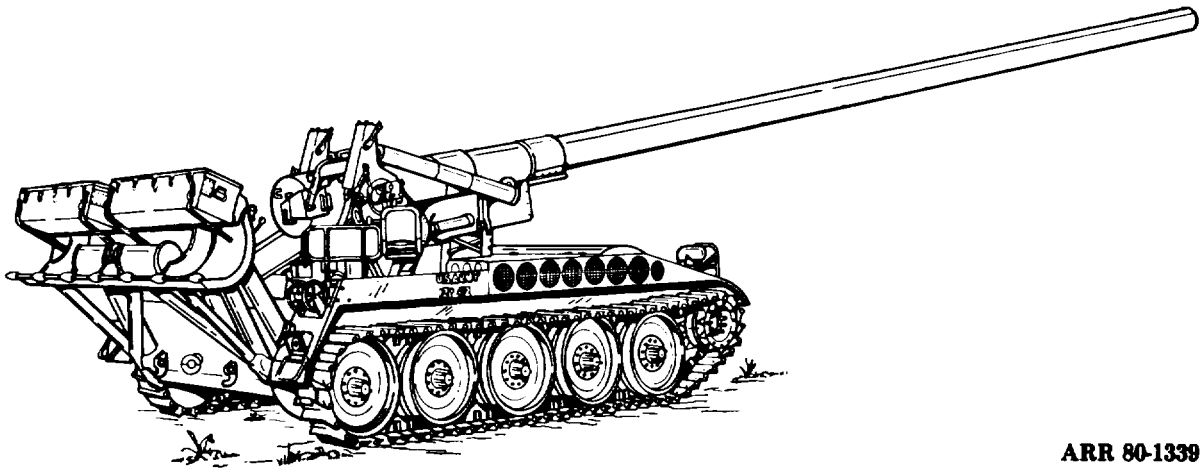

Figure 2-32. M107 175-mm self-propelled field artillery heavy gun.

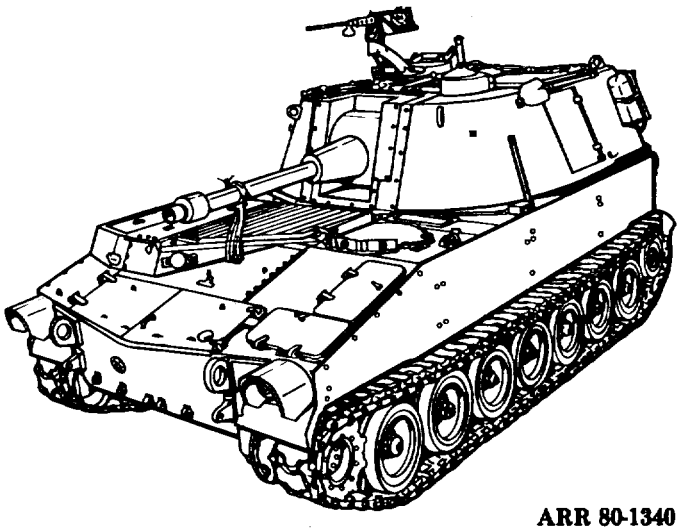

Figure 2-33. M108 105-mm self-propelled light howitzer.

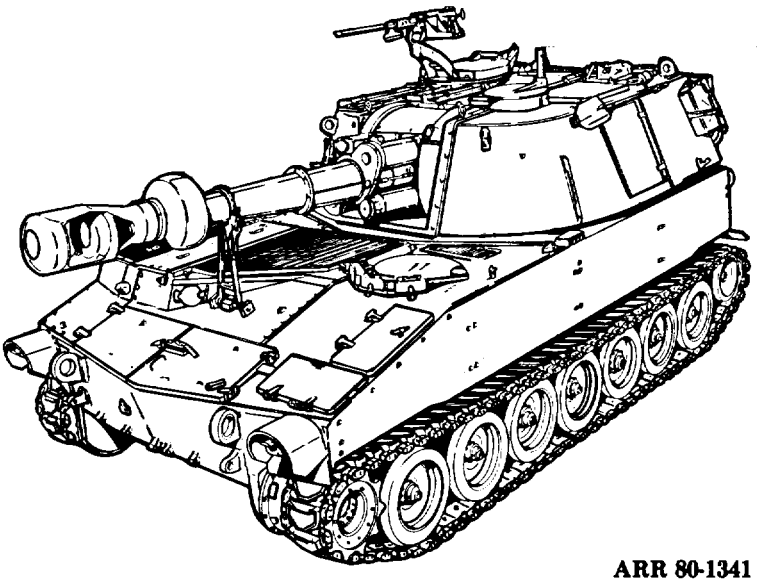

Figure 2-34. M109 155-mm self-propelled medium howitzer.

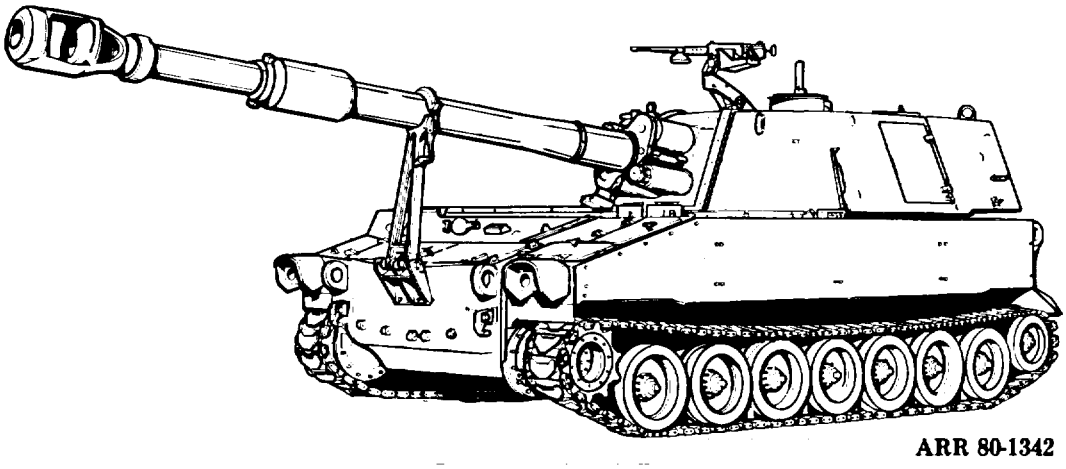

Figure 2-35. M109A1 155-mm self-propelled medium howitzer.

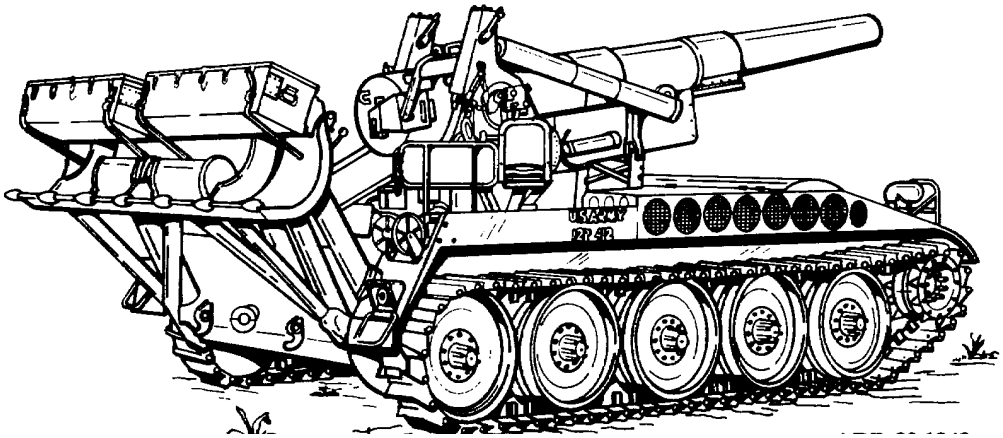

ARR 80-1343

Figure 2-36. M110 8-inch self-propelled heavy howitzer.

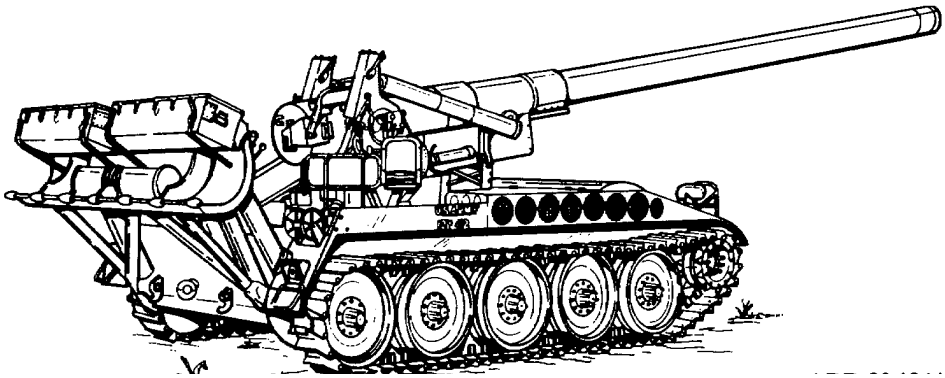

ARR 80-1344

Figure 2-37. M1101A1 8-inch self Propelled heavy howitzer.

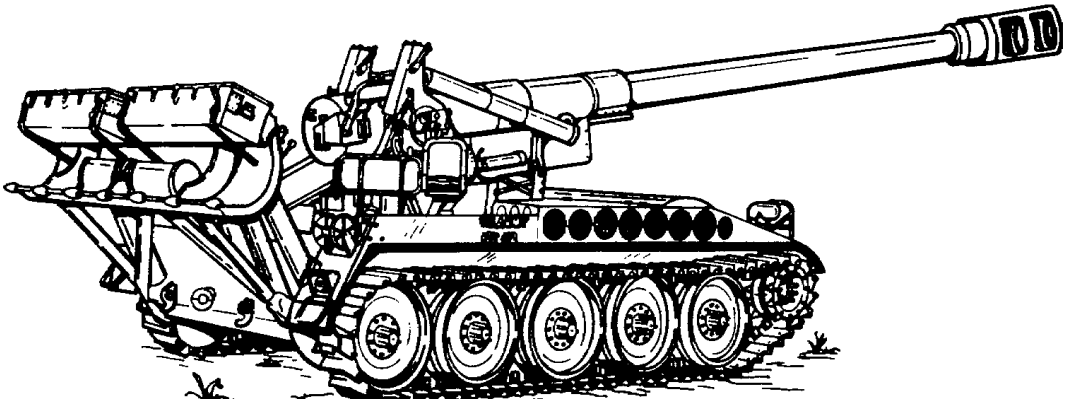

ARR 80-1345

Figure 2-38. M1101A2 8-inch self Propelled heavy howitzer.

Section III. DEVELOPMENT OF ROCKETS AND GUIDED MISSILES

2-11. Early Development.

a. Rockets. From the earliest times, rockets have attracted the attention of the military engineer for warlike purposes, first in Asia and later in Europe.

(1) The Chinese used an arrow with a rocket-propelling device in battle against the Mongols as early as 1232. By the end of the 13th century, knowledge of rockets had traveled from the Orient to Europe.

(2) By the beginning of the 15th century, rockets were widely known in parts of Europe, as shown in a German military report of 1405, in which several types of rockets were mentioned. During the 15th century, both cannons and rockets were used on the battlefield. The accuracy and range advantages of the cannon over the crude rockets became apparent, and the rockets were gradually discarded. For the next three centuries, rockets became obsolete as weapons, and their use was limited to signals and fireworks displays.

(3) During the latter part of the 18th century, India used rockets in combat against the British. These rockets reached ranges up to 1-1/2 miles and were so successful that the British immediately began developing a war rocket. As a result, Sir William Congreve developed a rocket that reached up to several thousand yards. The British used their rockets against the French in 1806 and against the Americans in the War of 1812.

(4) By 1850, the use of rockets as weapons was practically discontinued. Guns were still the predominant weapons of war, since the development of rifled barrels and recoil mechanisms set an efficiency standard with which rockets could not compete.

(5) Rocket development began again around 1918, during World War I. During this period and the years immediately after, an American, Dr. Robert Goddard, performed the rocket development work which was to lay the foundation of modern rockets and guided missiles. Dr. Goddard developed the basic idea of the bazooka in 1918, but the weapon was not used until World War II.

b. Guided Missiles.

(1) The torpedo was developed during the Civil War and is classified as the first guided missile. By the time of World War I, the torpedo was a highly developed and formidable weapon.

(2) The inaccuracy of rockets brought about the realization that some form of guidance would be necessary if the potentialities of speed and range were to be profitably used. Dr. Goddard laid down the principles of rocketry that are used today in the development of guided missiles.

(3) During the 1930's, much research was conducted on jets and rockets by both American and German rocket societies. The Germans initiated guided missile warfare in August 1943, when a British ship was hit with a radio-controlled bomb launched from a German airplane. The Germans did not exploit these radio-controlled missiles, but instead developed mechanical systems for controlling missiles that were pre-set before takeoff. Such controls were used most exclusively in the V-1 and V-2 missiles which were used to bombard England and the European Continent during World War II. The V-1 missiles were launched both from the air and the ground.

2-12. Development Since World War II.
Although the M119 4.5-inch multiple rocket launcher (fig 2-39) was developed and used as a field artillery weapon during World War II, most of the development of rockets and guided missiles took place after World War II.

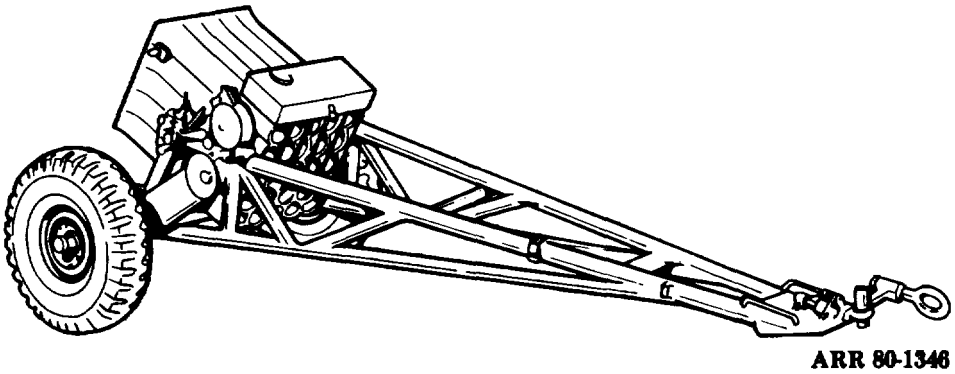

Figure 2-39. M119 4.5-inch multiple rocket launcher.

a. Rockets. Large-caliber free-flight rockets were developed soon after World War II. These rockets used a solid propellant (fuel) and were fired from mobile launchers equipped with a launcher rail to guide the rocket during takeoff. The rockets and rocket launchers developed since World War II are as follows:

(1) Honest John rocket launcher (fig 2-40).

(2) Little John rocket launcher (fig 2-41).

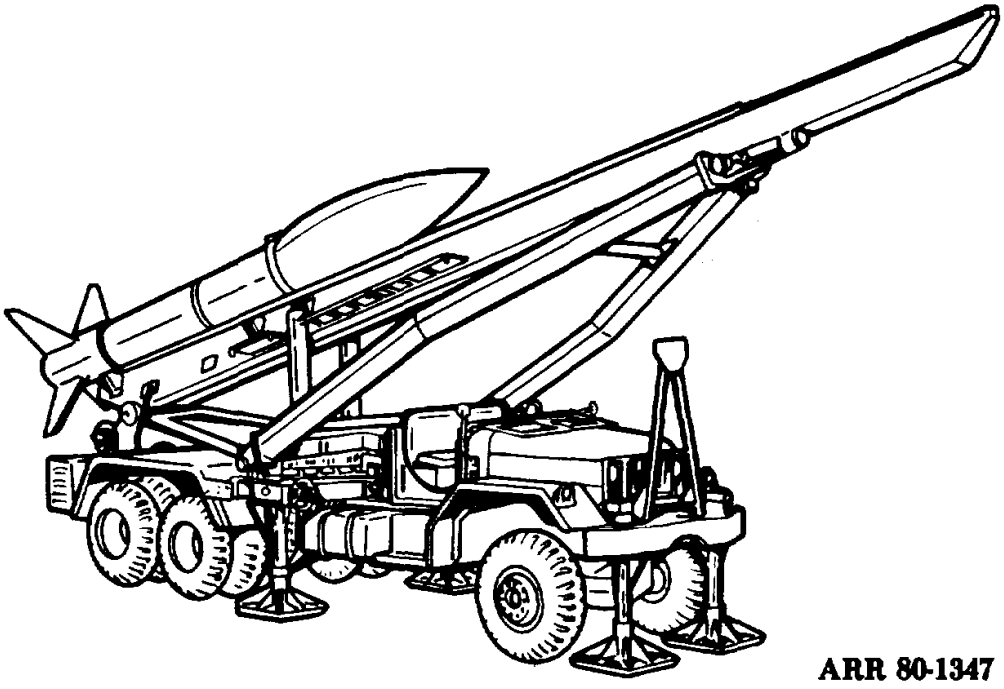

Figure 2-40. Honest John rocket launcher.

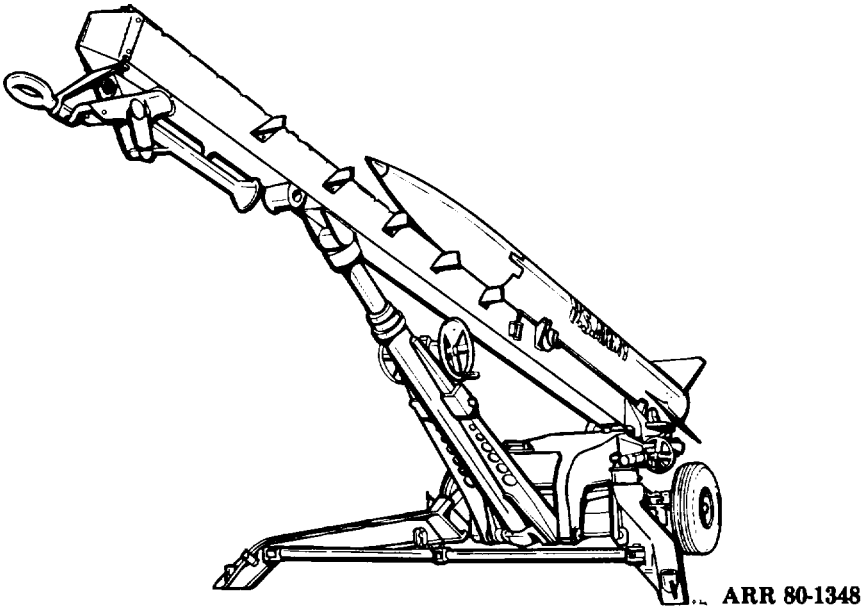

Figure 2-41. Little John rocket launcher.

b. Guided Missiles. Guided missiles were developed that used both liquid and solid propellants. These guided missiles are all equipped with n electronic guidance system. The guided missiles developed since World War II are as follows:

(1) Corporal guided missile (fig 2-42).

(2) Lance guided missile (fig 2-43).

3) Pershing guided missile (fig 2-44).

(4) Sergeant guided missile (fig 2-45).

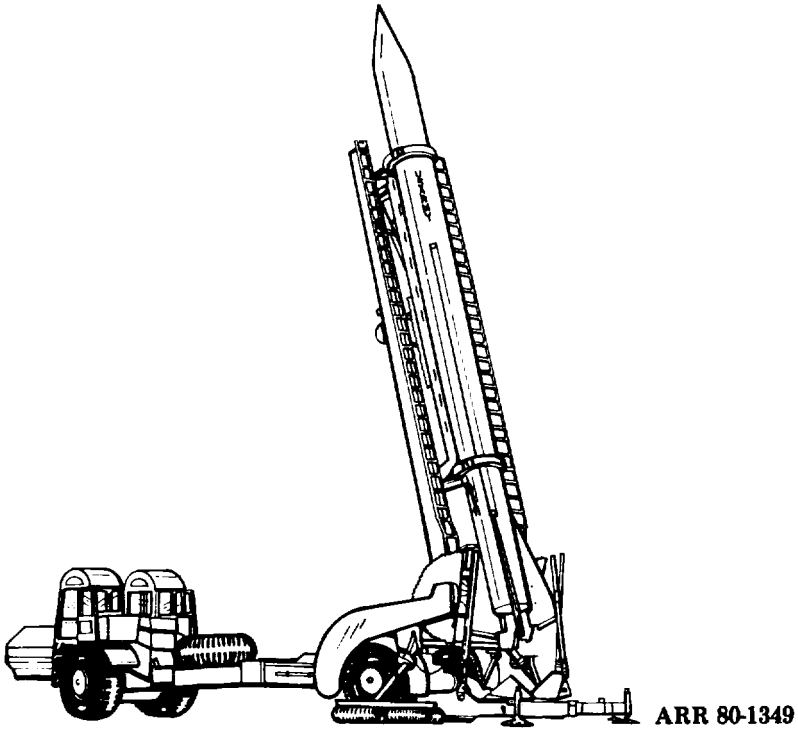

Figure 2-42. Corporal guided missile.

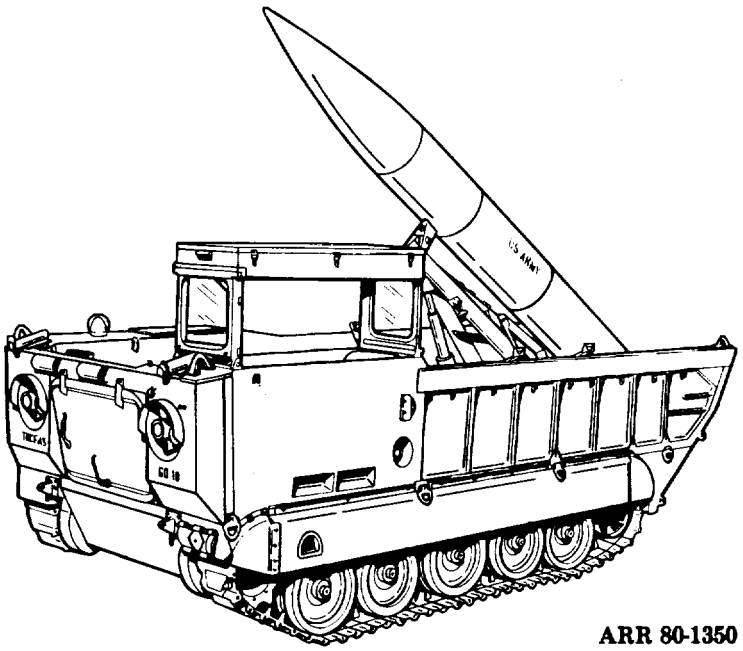

Figure 2-43. Lance guided missile.

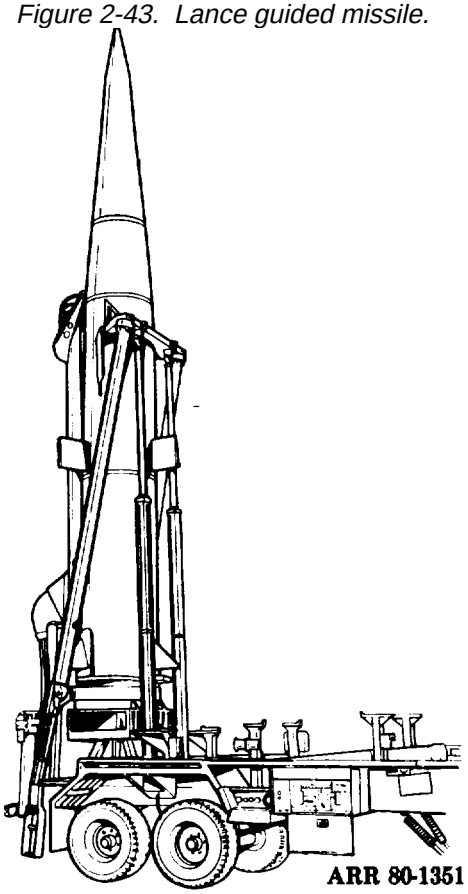

Figure 2-44. Pershing guided missile.

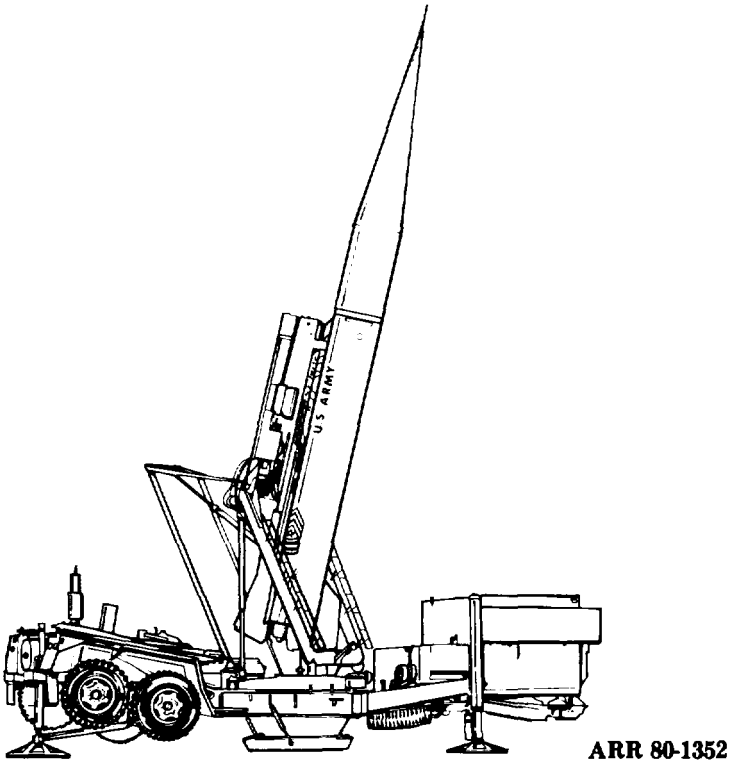

Figure 2-45. Sergeant guided missile.

CHAPTER 3

CLASSIFICATION OF CURRENT FIELD ARTILLERY WEAPONS

Section I. GENERAL

3-1.General. Current field artillery weapons include both cannon-type weapons and guided missiles. Each type of weapon is designed for a particular use and therefore has a different range and trajectory (path of flight).

3-2. Cannon-Type Weapons. Cannon-type weapons are classified as guns or howitzers. Some artillery weapons have both gun and howitzer characteristics.

a. Gun. As a type of artillery, a gun is a cannon with a long barrel which fires limited types of projectiles at a low angle of fire and at a high muzzle velocity.

b. Howitzer. A howitzer is a cannon with a medium length barrel which fires various types of projectiles at **a** high angle of fire and at **a** medium muzzle velocity.

3-3. Rockets and Guided Missiles.

a. Rocket. A rocket is **a** free-flight missile. Although the rocket is classified as **a** field artillery weapon, it is currently not in military use.

b. Guided Missile. A guided missile is a rocket type device with a trajectory that can be altered in flight by a mechanism within the missile. It is held, aimed, and fired by a rail- or platform-type missile launcher.

Section II. CURRENT FIELD ARTILLERY WEAPONS

3-4. **Cannon-Type Weapons.**

a. M1O1Al 105MM Towed Light Howitzer (Fig 3-1). This weapon came into service in the early 1940's and was used extensively during World War II and the Korean conflict. The M101A1 is now in limited use with the US Army and is being replaced with the M102. The M101A1 is primarily assigned to infantry divisions.

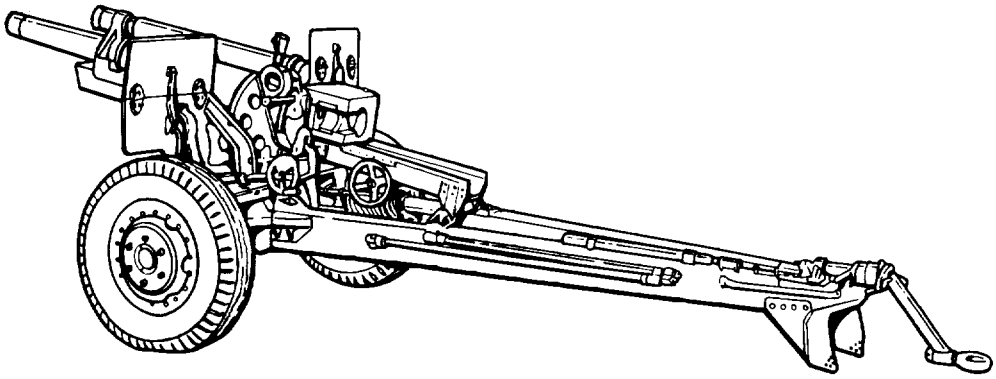

ARR 80-1353

Figure 3-1. M101A1 howitzer.

b. M102 105-MM Towed Light Howitzer (Fig 3-2). This weapon came into service in the mid-1960's and was used extensively during the Vietnam conflict. The M102 has generally replaced the MlOlA1. The M102 is primarily assigned to infantry, airmobile, and airborne divisions.

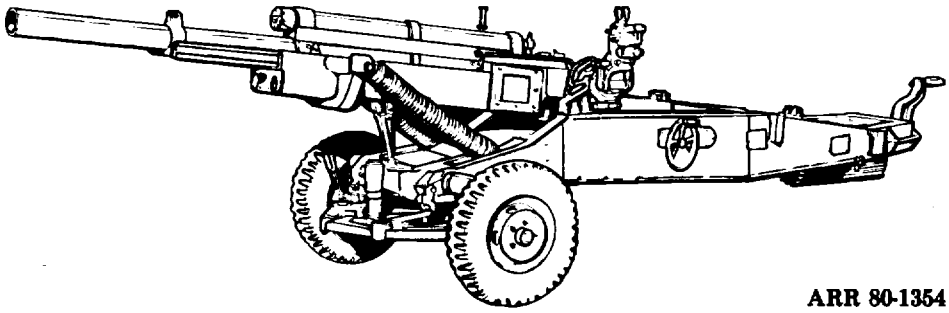

Figure 3-2. M102 howitzer.

c. M114A1 155-MM Towed Medium Howitzer (Fig 3-3). This weapon came into service in the early 1940's and was used in World War II and the Korean and Vietnam conflicts. Although now in use, the M114A1 is scheduled to be replaced with the M198. The M114A1 is primarily assigned to infantry and airmobile divisions and the nondivisional units that support them.

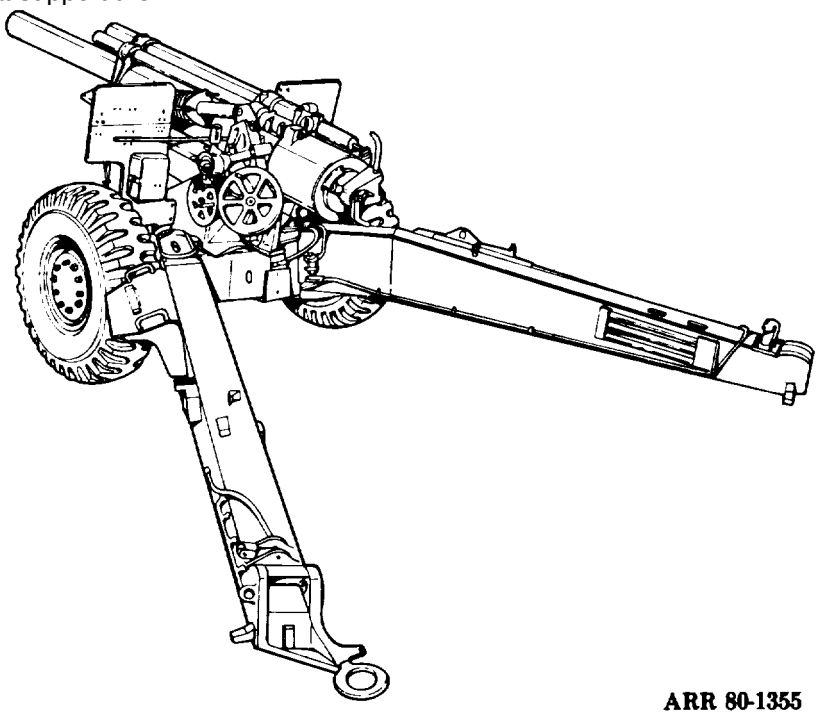

Figure 3-3. M114A1 howitzer.

d. M198 155-MM Towed Medium Howitzer (Fig 3-4). This weapon came into service in the mid-1970's and is replacing the M114A1. The weapon will be assigned to divisional and nondivisional units.

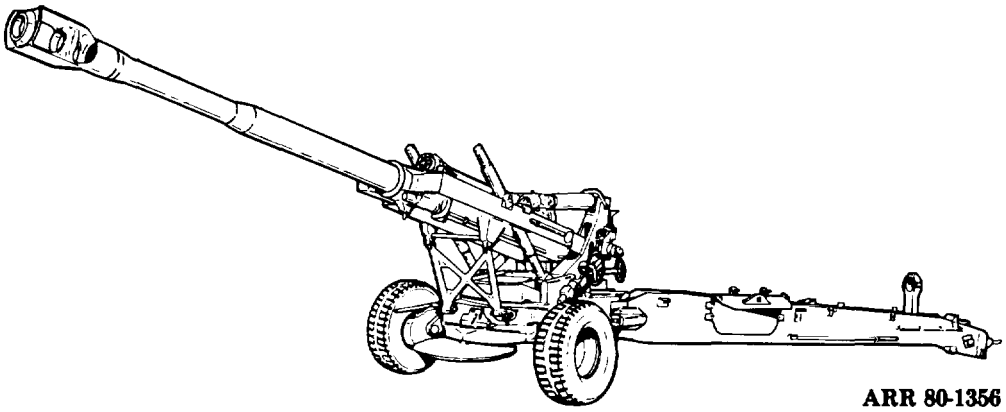

Figure 3-4. M198 howitzer.

e. M108 105-MM Self-Propelled Light Howitzer (Fig 3-5). After coming into service in the earl1960's, this weapon was used extensively in the Vietnam conflict. The M108 has been phased out o the active Army and is being replaced by the M109 and M109A1 howitzers in the armored and mechanized divisions.

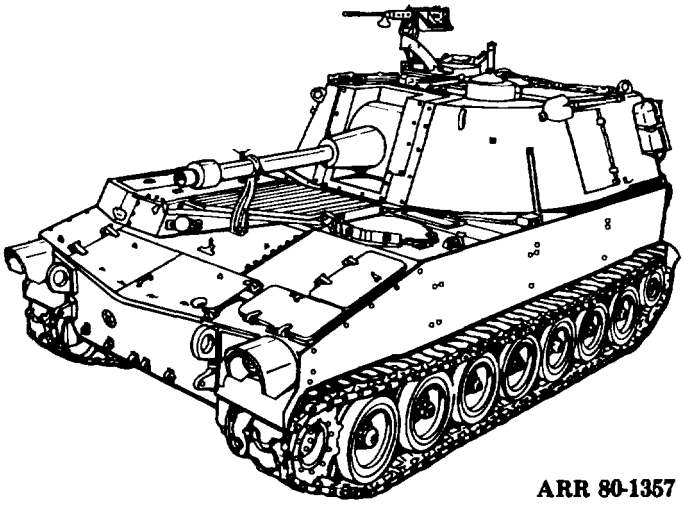

Figure 3-5. M108 howitzer.

f. M109 155-MM Self-Propelled Medium Howitzer (Fig 3-6). This weapon, which came into service in the early 1960's, was used extensively in the Vietnam conflict. The M109 is being replaced by the M109A1.

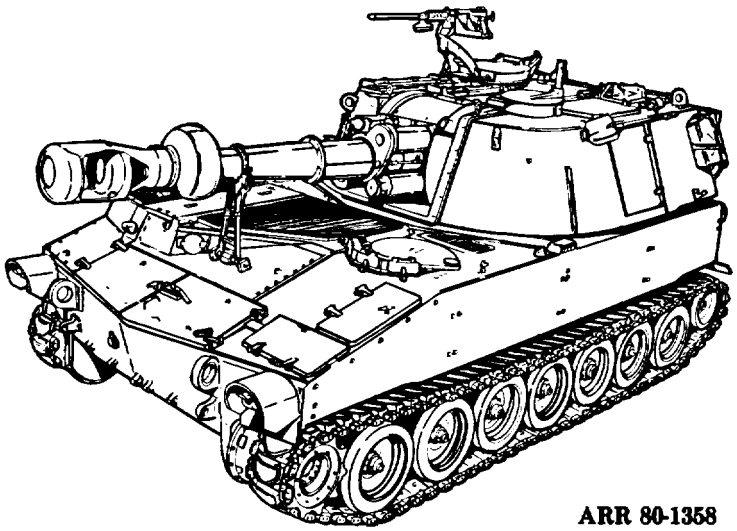

Figure 3-6. M109 howitzer.

g. M109A1 155-MM Self-Propelled Medium Howitzer (Fig 3-7). This weapon was also introduced in the early 1960's and was used in the Vietnam conflict. The M109A1 will eventually replace the M109. The M109A1 provides a greater range than the M109 because of longer tube length and the ability to fire the new charge 8 propelling charge. This weapon is primarily assigned to divisional and nondivisional units.

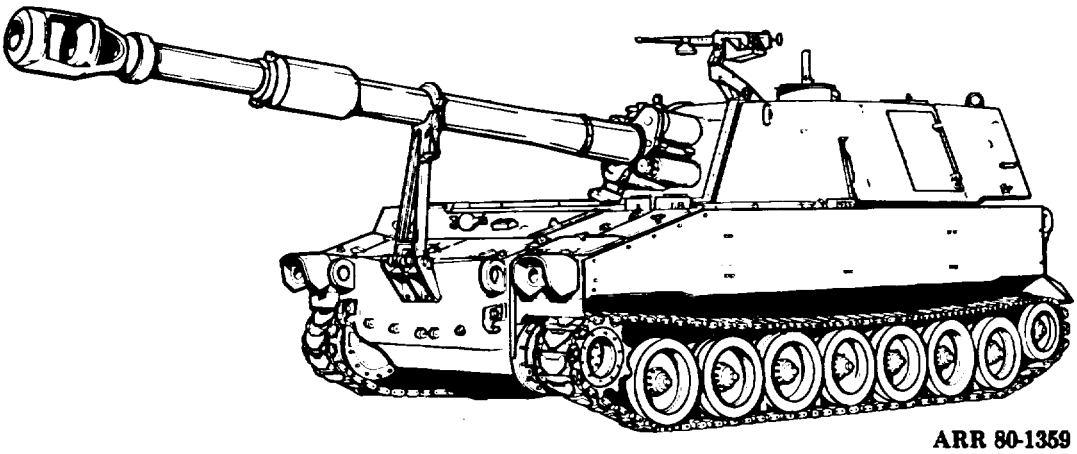

Figure 3-7. M109A1 howitzer.

h. M110 8Inch Self-Propelled Heavy Howitzer (Fig 3-8). This weapon came into service in the mid-1960's and was used extensively in the Vietnam conflict. The M 110 has been phased out and is being replaced by the M11OAl and MllOA2. The Ml110 is primarily a corps weapon.

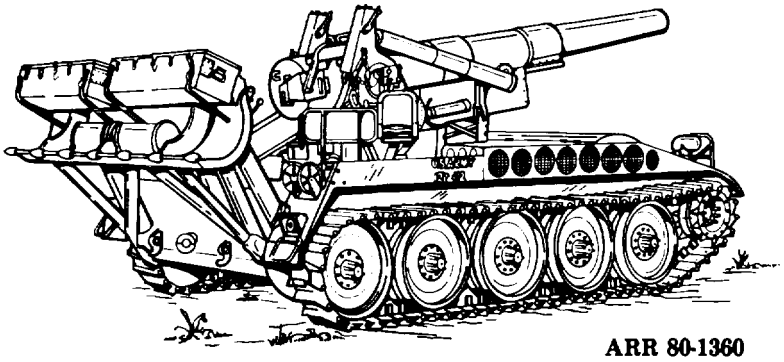

Figure 3-8. M110 howitzer.

i. M1100A 8Inch Self-Propelled Heavy Howitzer (Fig 3-9). One of several weapons used in the Vietnam conflict, the M11OA1 came into service in the mid-1960's. This weapon will eventually replace the M110. The M11OA1 is primarily assigned to divisional and nondivisional units.

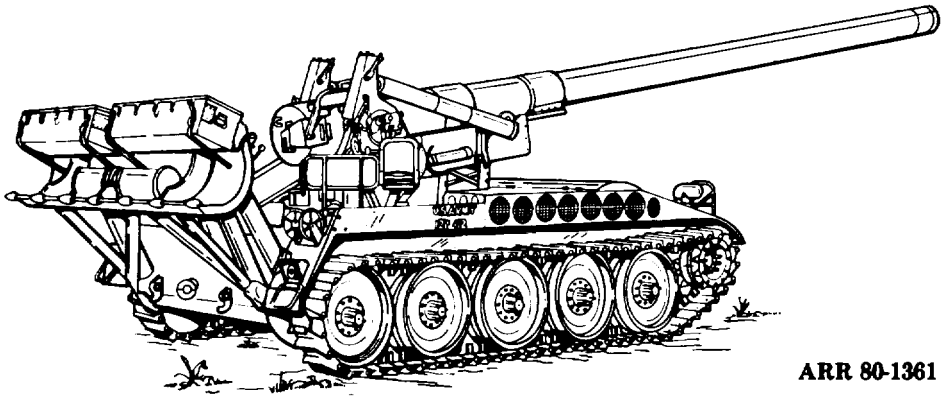

Figure 3-9. M110A1 howitzer.

j. M107 175-MM Self-Propelled Gun (Fig 3-10). This weapon came into service in the mid-1960's and was used extensively in the Vietnam conflict. The few remaining M107's are assigned to nondivisional units. The M107 will eventually be replaced by the M11OA1 or M11OA2.

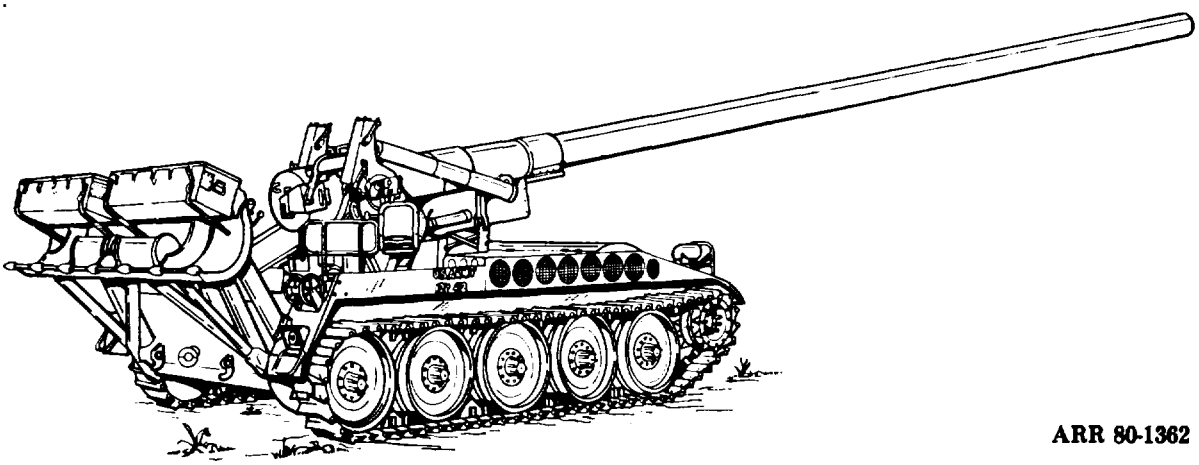

Figure 3-10. M107 gun.

3-5. Guided Missiles.

a. Pershing Guided Missile (Fig 3-11). This missile was developed as a long-range, surface-to-surface weapon with nuclear capability to be used at the field army level. It came into service in the early 1960's.

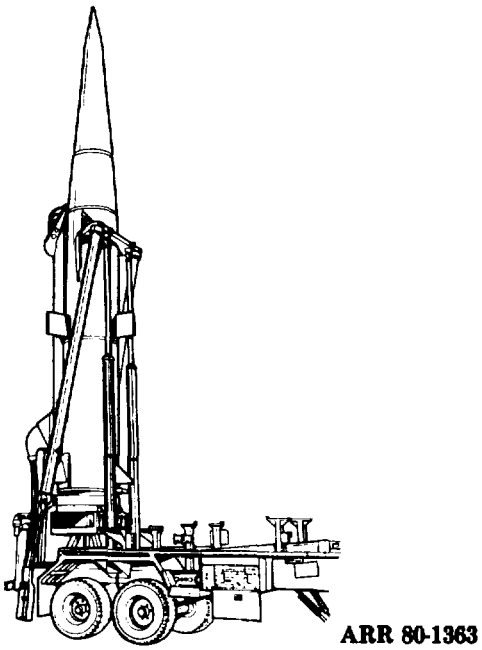

Figure 3-11. Pershing guided missile.

b. Lance Guided Missile (Fig 3-12). This missile, developed to replace the Honest John rocket and the Sergeant guided missile, came into service in the early 1970's. Lance is the corps general support missile system.

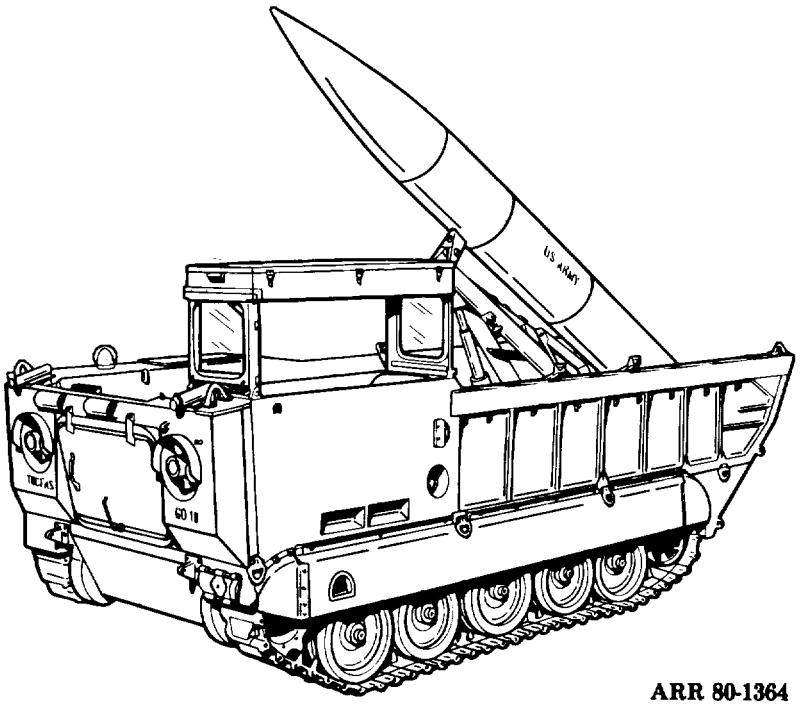

Figure 3-12. Lance guided missile.

PART TWO

THE CANNON

CHAPTER 4

INTRODUCTION

Section I. GENERAL

4-1. Scope. The term "cannon" is defined as a fixed or mobile piece of artillery, such as a gun or howitzer. Cannon is also used to refer to the portion of a weapon required to fire a projectile. This section is about the cannon as an entire weapon, while section II discusses the cannon as an individual component of the weapon.

4.2. Components. Although the number and types of components may vary according to the requirements of the weapon, a cannon essentially consists of the following components:

a. Cannon.

(1) Barrel assembly.

(2) Breech mechanism.

b. Loading and ramming mechanism.

c. Recoil mechanism.

d. Carriage and mount.

Section II. BARREL ASSEMBLY

4-3. Definitions. The barrel assembly **(fig** 4-1) generally consists of the tube and breech ring.

a. Tube. The tube consists of the chamber and bore.

(1) Chamber. The chamber is that part of the tube formed to receive the cartridge case when the complete round of ammunition is loaded into the weapon. It consists of the gas check seat and the centering slope.

(a) Gas check seat. The gas check seat is the tapered surface in the rear interior of the tube on weapons firing ammunition without metallic cartridge cases. It seats the split rings of the obturating mechanism when they expand under pressure in firing. This expansion creates a seal and prevents the escape of gases through the rear of the breech. Weapons firing ammunition with metallic cartridge cases do not have gas check seats since the expansion of the case against the walls of the chamber provides a gas seal for the breech (rearward obturation).

(b) Centering slope. The centering slope is the tapered portion at or near the forward end of the chamber that causes the projectile to center itself in the bore during loading.

(2) Bore. The bore is the rifled cylindrical interior portion of the tube through which the projectile moves when fired. It extends from the forcing cone to the muzzle. The tapered forcing cone at the rear of the bore allows the rotating band of the projectile to be engaged gradually by the rifling, thereby centering the projectile in the bore.

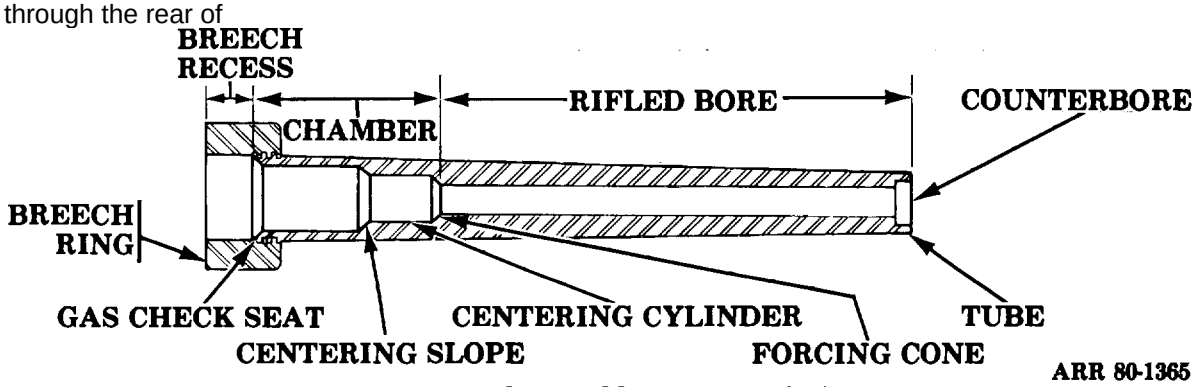

Figure 4-1. Barrel assembly (cross section)

b. Breech Ring. The breech ring houses the breech mechanism and is attached to the rear end of the tube.

(1) Breech recess. The breech recess is the space formed in the interior of the breech **ring** to receive the breechblock.

(2) Screw threads. In current field artillery weapons, the breech ring is attached to the tube by screw threads. The M109 and M109A1 howitzers have interrupted screw threads on the breech ring and tube. The tube and breech ring can be separated by rotating the tube only 1/4 turn.

4-4. Monobloc Tube Construction. The monobloc tube is formed in one piece by forging. The tube is made from an alloy steel ingot which is poured and then hot-forged into **a** cylindrical shape by a high-pressure press. A hole is bored through the center, the outer surface is rough-turned, and the barrel is machined. The tube is then subjected to one or both of the following procedures:

a. Heat Treatment. In the heat treatment process, the steel tube is subjected to high temperatures, air-cooled or quenched in oil, and tempered. This process brings out the most desirable combinations of metal properties, i.e., strength, hardness, toughness, etc.

b. Autofrettage (Prestressing). In this process, the inner portion of the tube is stressed beyond its elastic limits (beyond the stress induced by the highest charge to be fired). There are two methods of autofrettage.

(1) Swage method. The tube is swaged open by forcing a cylindrical-shaped carbon slug through the tube.

(2) Hydraulic method. The tube is stressed by applying very high hydraulic pressure to the inside of the bore for a short time.

4-5. Caliber. The caliber of a cannon is a measure of the diameter of the bore, not including the depth of the rifling. The caliber can be in either inches or millimeters (1 inch = 25.4 millimeters).

4-6. Rifling.

a. Rifling consists of helical grooves cut in the bore of a tube, beginning in front of the chamber and extending to the muzzle. The lands (fig 4-2) are the surfaces between the grooves.

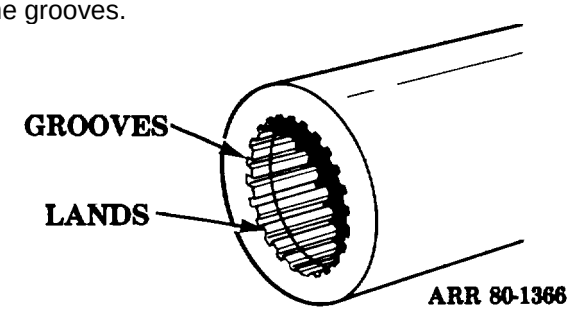

Figure 4-2. Lands and grooves.

b. The purpose of rifling is to impart to the projectile the rotation necessary to ensure stability in flight. The projectile (fig 4-3) is designed with rotating bands of soft metal, slightly larger in diameter than the bore of the tube. As the projectile is forced through the bore by propellant gases, the lands cut through the rotating band, engraving it to conform to the cross section of the bore and causing the projectile to rotate. The metal of the rotating band in the grooves prevents escape of gases past the projectile, thus performing forward s obturation.

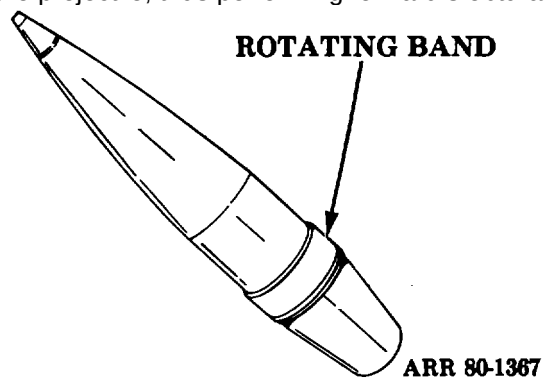

Figure 4-3. Projectile with rotating band.

c. Almost all current field artillery tubes have rifling with a right-hand uniform twist (fig 4-4). As viewed from the breech end of the tube, the rifling rotates to the right or clockwise. With the uniform twist, the degree of the twist is constant from the origin of the rifling to the muzzle. The twist of rifling can be expressed in terms of the number of calibers of length in which the groove completes one turn.

4-7. Barrel Assembly Mountings. The three basic methods for mounting a barrel assembly are central bore, recoil slide rail, and cradle and sleigh.

a. Central Bore Mounting (Fig 4-5). The barrel assembly may be mounted through the central bore of a cradle in which it slides during recoil and counterrecoil. Recoil cylinders on the cradle are coupled to the breech ring lug to regulate the recoil of the barrel assembly and to return it to the battery position. A recoil guide key, fitted in the keyway of the cradle yoke, prevents the barrel assembly from rotating in the cradle. The central bore mounting of the barrel assembly is used on the M114A1 howitzer and the M109/M109A1 howitzer.

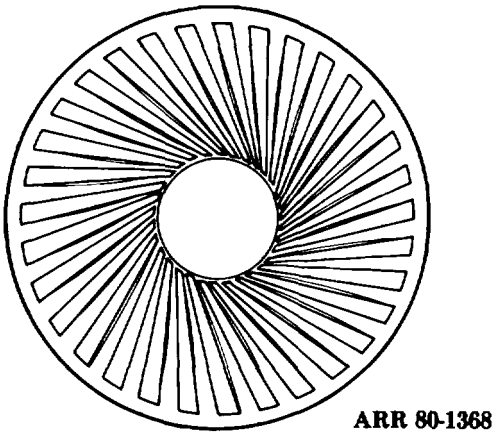

Figure 4-4. Rifling-right-hand uniform twist.

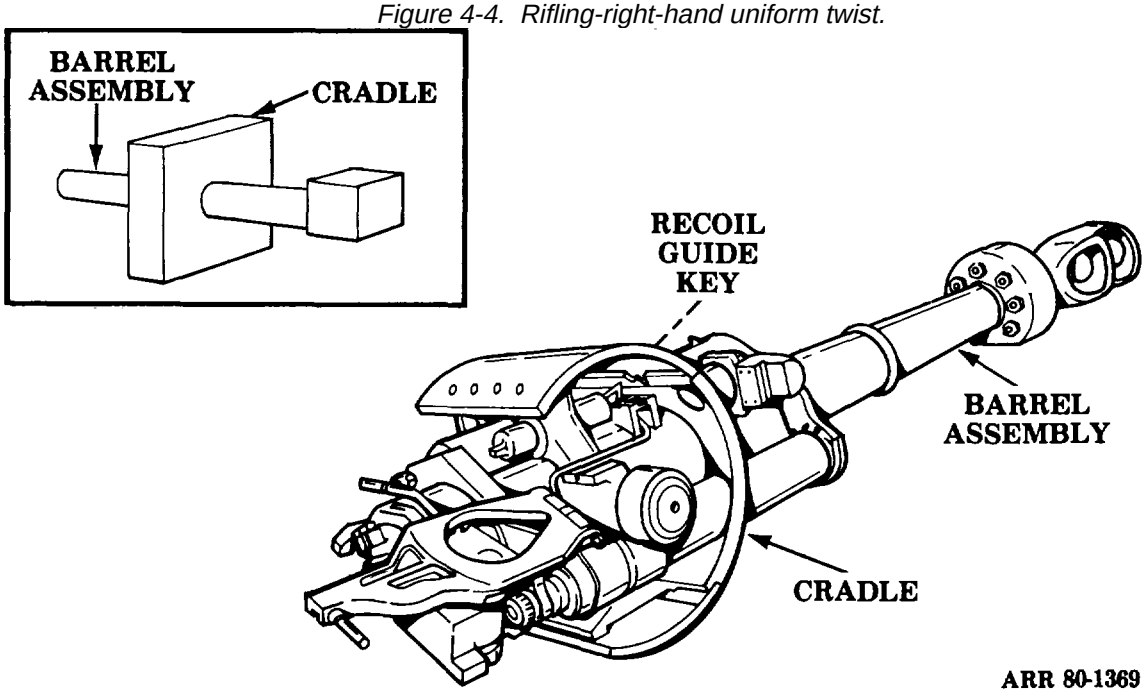

Figure 4-5. Central bore mounting.

b. Recoil Slide Rail Mounting (Fig 4-6). The barrel assembly is mounted on slide rails which slide in guides on the recoil mechanism cradle. The breech ring is attached to the recoil mechanism piston rod. The tube is attached to the breech ring by interrupted threads. The tube locking key keeps the tube from rotating. The muzzle end of the tube is supported by the tube support which is designed to let the tube move forward as it is expanded and lengthened by heat. The recoil slide mounting of the barrel assembly is used on the M110/Ml1OA1/ Ml11OA2 howitzer.

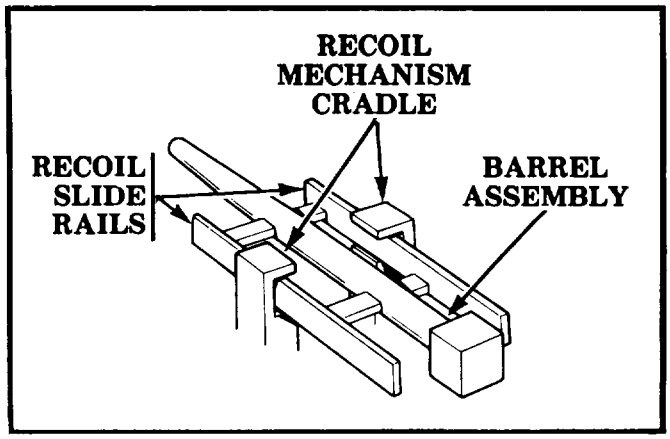

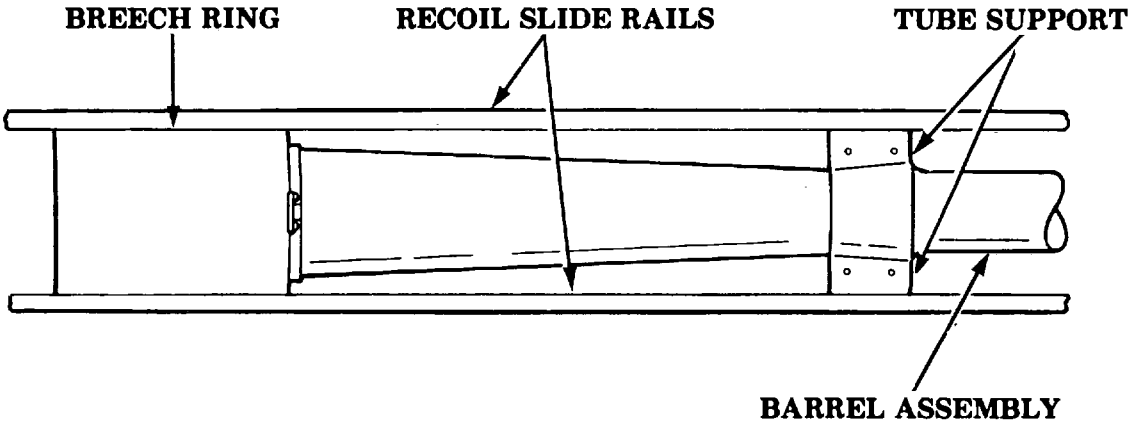

ARR 80-1370

Figure 4-6. Recoil slide rail mounting.

c. Cradle and Sleigh Mounting (Fig 4-7). The barrel assembly is mounted and fastened to the re-coil mechanism sleigh which slides on the cradle during recoil and counterrecoil. The cradle and sleigh mounting of the barrel assembly is used on the M101/M1OlA1 howitzer, the M102 howitzer, and the M198 howitzer.

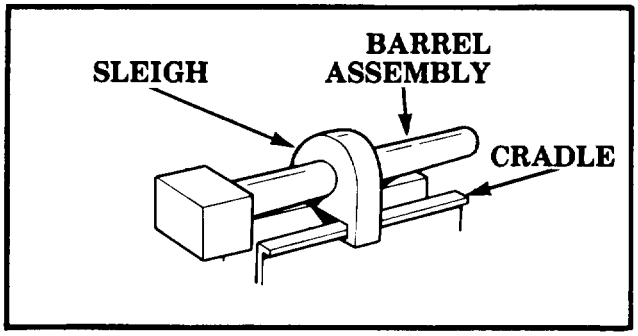

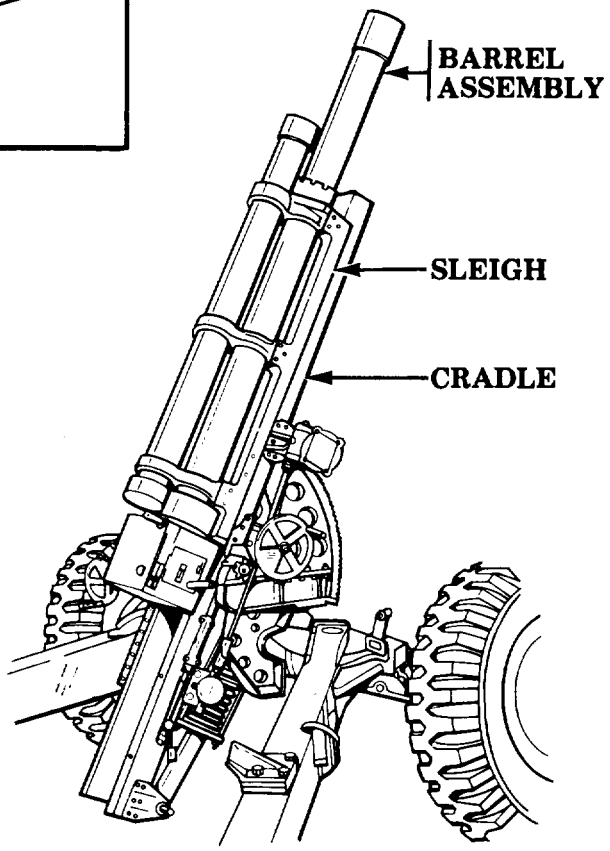

ARR 80-1371

Figure 4-7. Cradle and sleigh mounting.

4-8. Auxiliary Items.

a. Bore Evacuator.

(1) Description. The bore evacuator (fig 4-8) is used on enclosed, self-propelled combat vehicles with a semi-automatic breech mechanism, such as the M109/M109A1 howitzer. It prevents contamination of the crew compartment by removing propellant gases from the bore after firing. The bore evacuator forces gases to flow outward through the bore from a series of jets enclosed in a cylindrical chamber on the tube. The jets may be inserts or orifices in the tube.

(2) Operation. When a weapon has been fired and the projectile passes the evacuator jets, some of the propellant gases flow into the evacuator chamber (fig 4-9), creating a high pressure in the chamber. When the projectile leaves the muzzle, the gases in the bore are suddenly released. With the drop of pressure in the bore, gases flow from the evacuator chamber through the jets into the bore. As the gases flow from the jets at high velocity, gases are drawn from the rear of the bore. While the gases are escaping from the evacuator chamber, the breech is opened, allowing air and gases to flow through the bore and out of the muzzle.

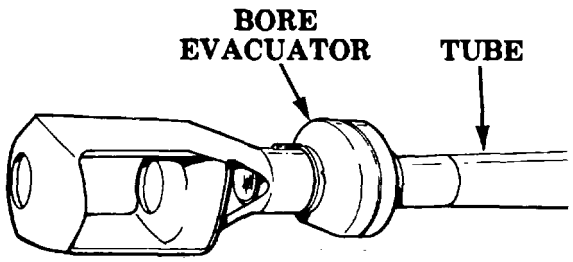

A. BORE EVACUATOR ON M109 HOWITZER

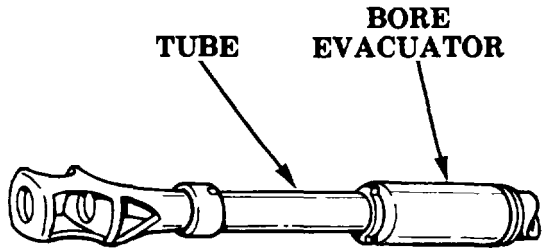

B. BORE EVACUATOR ON M109A1 HOWITZER

Figure 4-8. Bore evacuators.

ARR 80-1372

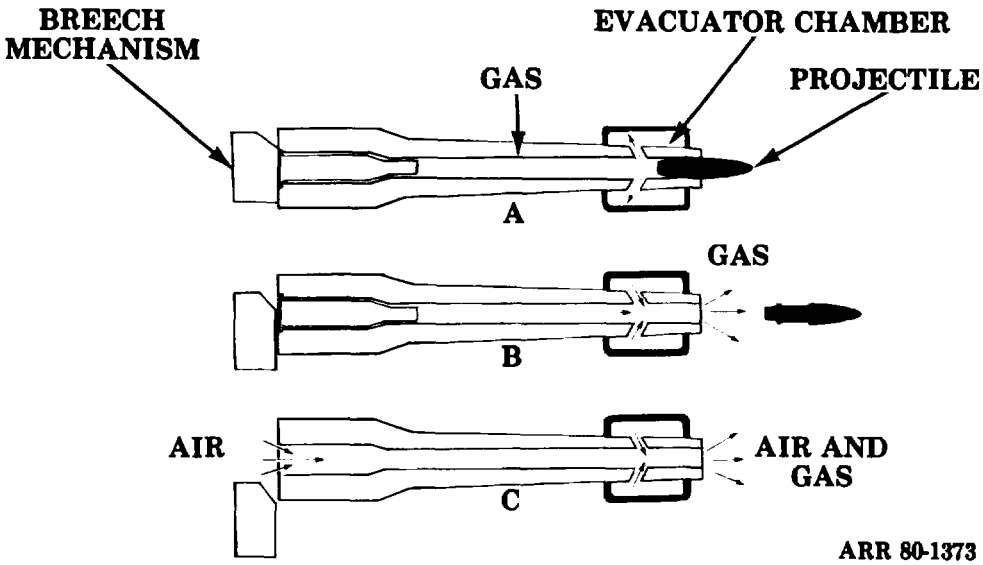

Figure 4-9. Bore evacuator operation.

b. Muzzle Brake.

(1) Description. A muzzle brake (fig 4-10) is a cylindrical piece mounted on the muzzle of a tube. It has a centrally bored hole, through which the projectile passes, and one or more baffles. The primary purpose of a muzzle brake is to reduce the force of recoil. The M109/M109A1 howitzer, the M198 howitzer, and the M110A2 howitzer are each equipped with a muzzle brake.

(2) Operation. As the projectile leaves the muzzle, the high-velocity gases strike the baffles of the muzzle brake (fig 4-11) and are deflected rearward and sideways into the atmosphere. When striking the baffles, the gases exert a forward force on the baffles that partially counteracts and reduces the force of recoil.

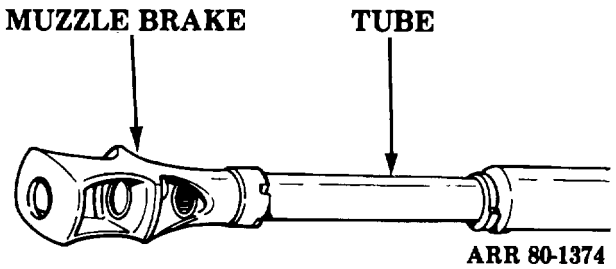

Figure 4-10. Muzzle brake

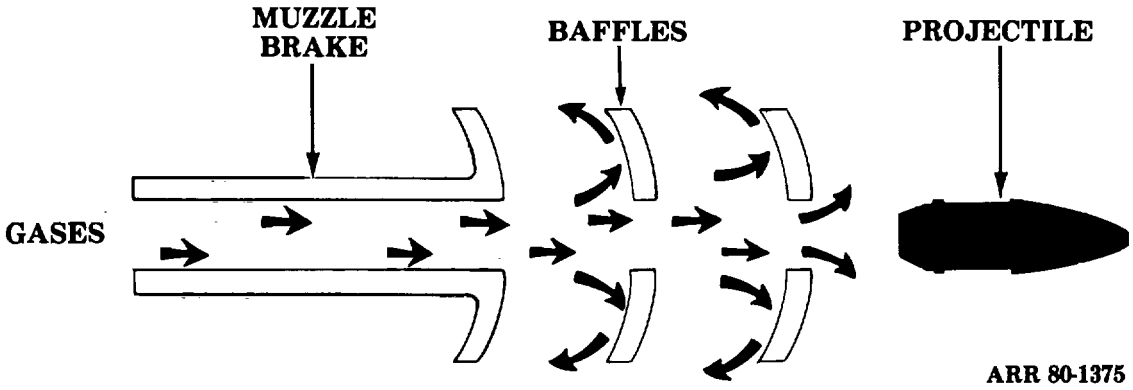

Figure 4-11. Muzzle brake operation.

Section III. BREECH MECHANISM

4-9. General. The breech mechanism is the group of devices that opens and closes the breech, fires the round of ammunition, and provides a gas seal after firing. The breech mechanism (fig 4-12 and 4-13) consists of the following:

a. Breechblock. This opens and closes the breech.

b. Breech Operating Mechanism. This actuates the breechblock.

c. Firing Mechanism. This fires the round.

d. Obturator. In weapons using separate-loading ammunition, this provides **a gas seal.**

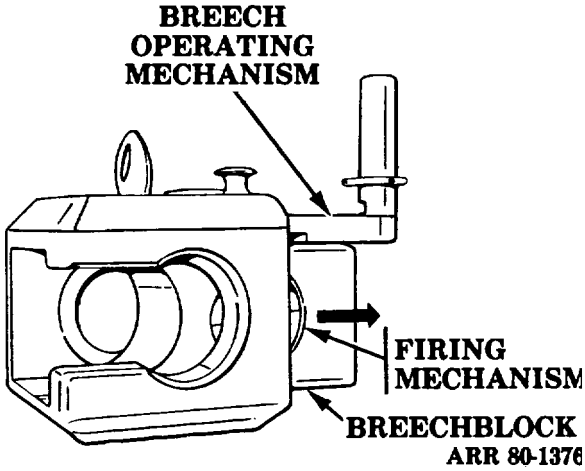

Figure 4-12. Breech mechanism for semifixed ammunition

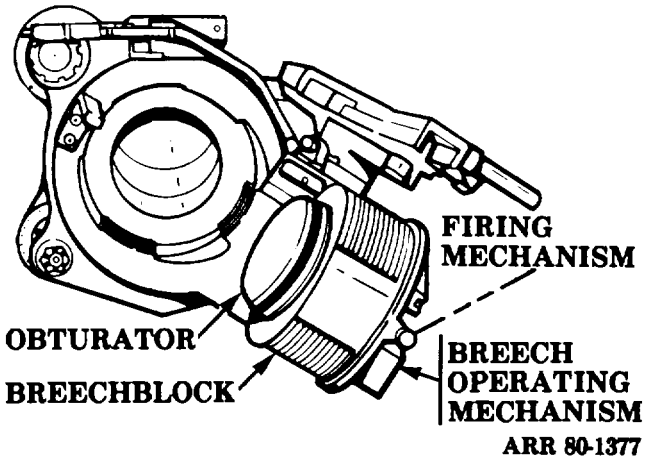

Figure 4-13. Breech mechanism for separate-loading ammunition.

4-10. Breechblock. The breechblock is the principal part of the breech mechanism. It is essentially a large heavy piece of steel that covers or seals the breech end of the tube and houses portions of the firing mechanism. There are two types of breech-block-the interrupted-screw and sliding-wedge.

a. Interrupted-Screw Breechblock (Fig 4-14). This type of breechblock is used on cannons that fire separate-loading ammunition.

(1) The threaded surface of the breechblock is divided into an even number of sections, and the threads of the alternate sections are cut away (fig 4-14). As a result, half of the breechblock surface is threaded and half is plain or slotted. Similarly, the threads of the breech recess are cut away opposite the threaded sections of the breechblock. The breechblock can be rapidly inserted into the breech recess, with the threaded sections of the breechblock sliding in the blank sections of the breech recess. With a small turn, the threads of the breechblock and breech recess are fully engaged and the breechblock is locked. If the threads were not cut away, locking the breechblock would require several turns. This type of interrupted-screw breechblock is used on the M109/M109A1 howitzer and the M198 howitzer.

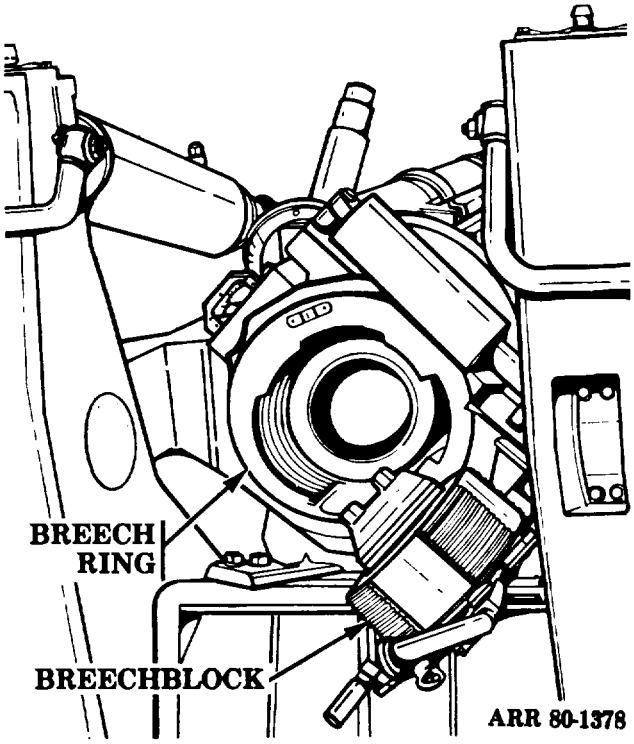

Figure 4-14. Interrupted-screw breechblock

(2) The stepped-thread interrupted-screw (Welin) breechblock (fig 4-15) is a modification of the interrupted-screw breechblock. The breech recess and breechblock are cut with a series of stepped threads. When the breechblock is inserted and turned in the breech recess, the matching sections of stepped threads engage. Less rotation is needed to close the breechblock, and there is a greater threaded surface or holding area. The stepped-thread interrupted-screw breechblock is used on the M114/M114A1/M114A4 howitzer, the M110/ M110A1/M110A2 howitzer, and the M107 gun.

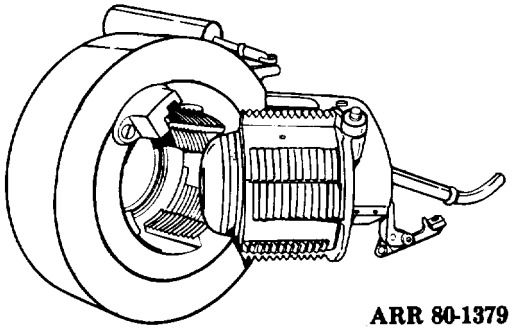

Figure 4-15. Stepped-thread interrupted-screw breechblock.

b. Sliding-Wedge Breechblock.

(1) Description. The rectangular sliding-wedge breechblock slides in a rectangular recess in the breech ring. It is used on cannons firing semifixed ammunition.

(a) When the motion of the breechblock is horizontal, the mechanism is referred to as the horizontal sliding-wedge breechblock (fig 4-16). The M101/M1OlA1 howitzer has this type of breechblock.

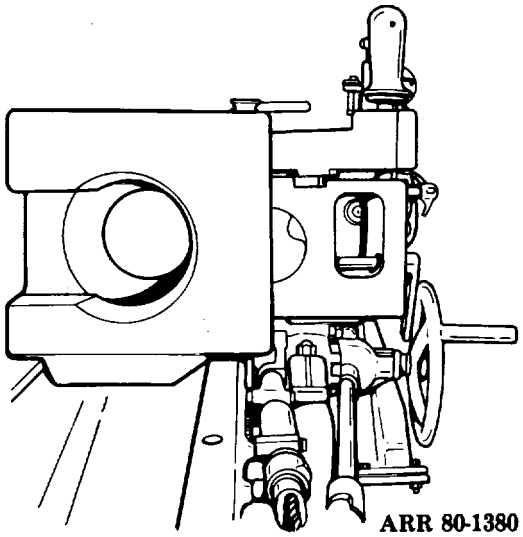

Figure 4-16. Horizontal sliding-wedge breechblock.

(b) When the motion of the breechblock is vertical, the mechanism is referred to as a vertical sliding-wedge breechblock (fig 4-17). The M102 howitzer has this type of breechblock.

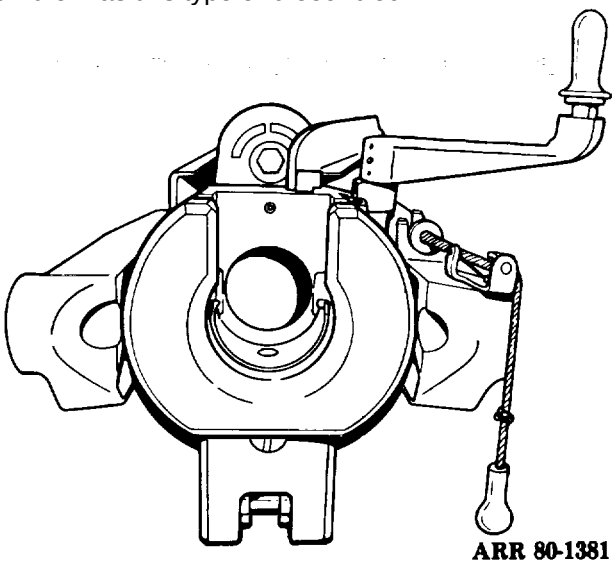

Figure 4-17. Vertical sliding-wedge breechblock.

(2) Operation. Figure 4-18 shows the operation of the sliding-wedge breechblock.

(a) In view A, the breechblock is open, and the cannon is ready to receive the ammunition.

(b) The round is pushed into the breech almost to a seated position as shown in view B.

(c) With the action of the operating mechanism, the breechblock slides over the breech face (view C). The beveled edge of the breechblock forces the round into its seated position in the chamber. The wedging action between the breech-block and the breech ring seals the tube.

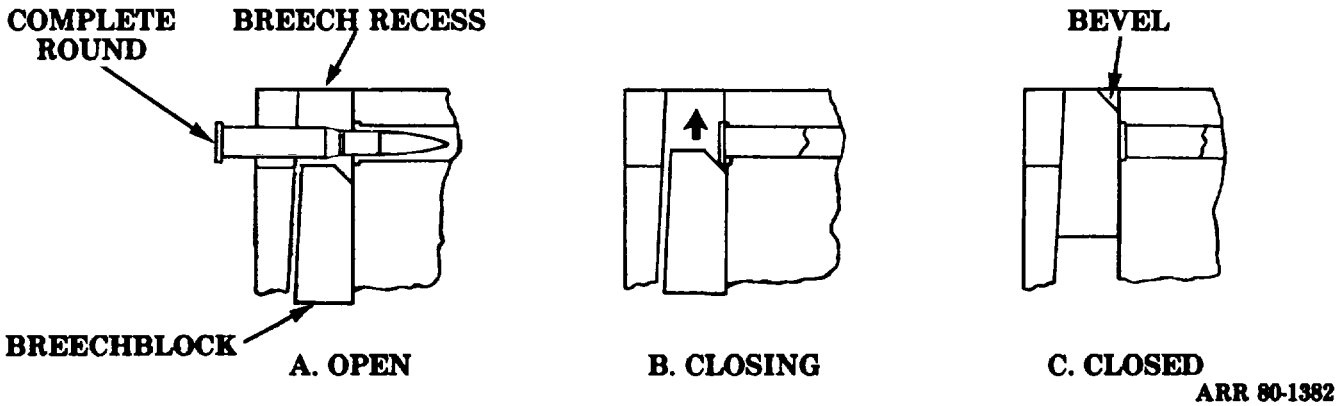

Figure 4-18. Sliding-wedge breechblock operation.

4-11. Breech Operating Mechanism. The breech operating mechanism is primarily designed to actuate the breechblock. The carrier and sliding-wedge are the two main types of breech operating mechanisms.

a. Carrier Breech Operating Mechanism. The carrier breech operating mechanism is used in cannons with interrupted-screw breechblocks. The carrier, which is assembled to the breechblock, is hinged at the side so that it swings the breechblock horizontally. The carrier has a mechanism for rotating the breechblock to disengage the threads before swinging it free of the breech and for engaging the threads after closing. The carrier breech operating mechanism is designed for manual or semiautomatic operation.

(1) Manual operation. The operating handle on this type of breech operating mechanism (fig 4-19) actuates the rotating mechanism of the breechblock carrier and swings the breechblock out of its recess in the breech ring. A counterbalance mechanism aids in opening and closing the breech on some medium- and large-caliber weapons that have large and correspondingly heavy breech-blocks and carriers.

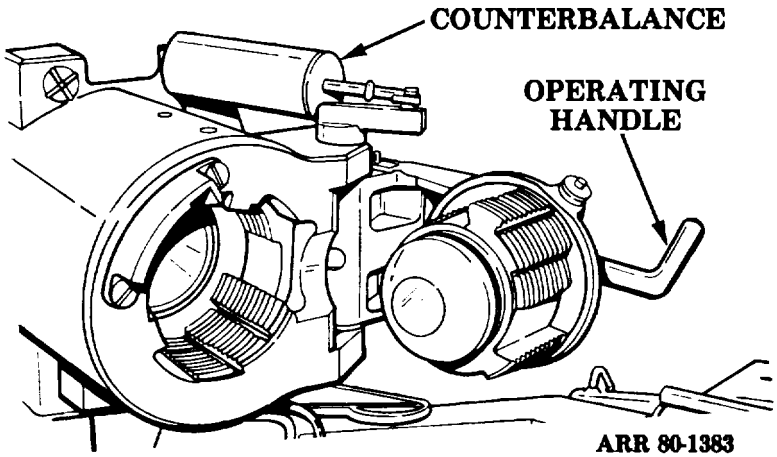

Figure 4-19. Manual carrier breech operating mechanism.

(a) To open the breech, the safety latch is released and the operating handle is pulled down to a horizontal position. This rotates and unlocks the breechblock. The operating handle is then used to swing the carrier and breechblock open. To close, the operating handle is used to swing the carrier and breechblock to the closed position. Raising the operating handle to the upright position rotates the breechblock to the locked position.

(b) A counterbalance mechanism (fig 4-20) is provided on some weapons to aid in swinging the breechblock into the open and closed position with ease, safety, and rapidity. Although useful at low elevation to hold the breechblock in the fully open or closed position, the counterbalance mechanism is especially valuable when the cannon is elevated, because it aids in swinging the breechblock against gravity and lowering it gently. The counterbalance mechanism is essentially a cylinder, piston, piston rod, and compression spring connected to the breech mechanism. The compression spring pulls and holds the breech-block in the open or closed position.

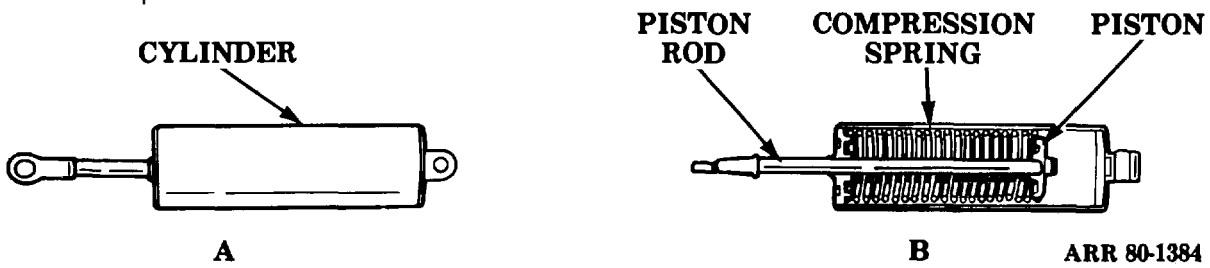

Figure 4-20. Counterbalance mechanism.

(2) Semiautomatic operation. The rotation of the operating crank on this type of breech operating mechanism (fig 4-21) actuates the rotating mechanism of the breechblock carrier and swings the breechblock out of its recess in the breech ring. To load the first round, the breech must be opened manually. After firing each round, the breech is automatically opened during counterrecoil.

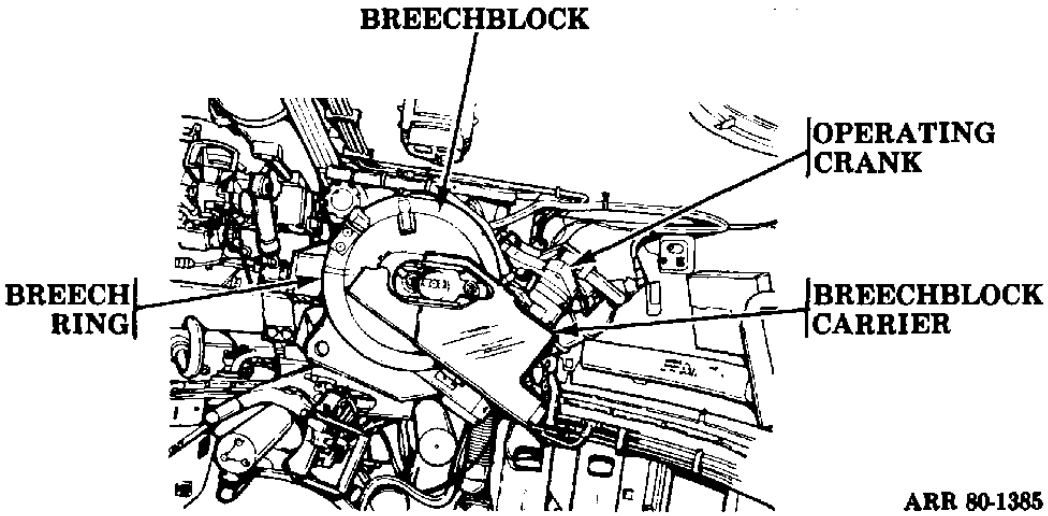

Figure 4-21. Semiautomatic carrier breech operating mechanism.

(a) Opening the breech.

1. Manual operation (view A, fig 4-22). The breechblock is opened by depressing the plunger on the operating handle and pulling the operating handle rearward until the operating crank pin is engaged in the cradle cam. The operating handle is returned to the locked position.

2. Automatic operation (view B). During counterrecoil, the operating crank pins enter the cam grooves on the underside of the cradle cam. As the cannon moves into battery, the cam grooves, acting on the operating crank pins, force the operating crank to rotate. This actuates the rotating mechanism of the breechblock carrier and causes the breechblock to rotate, unlock, and swing open.

(b) Closing the breech (view C). When the breechblock is held in the open position with the operating crank pin engaged in the cradle cam, the closing springs inside the operating crank are under tension. To close the breech, the cradle cam is lifted up until the operating crank pin is disengaged from the groove in the cradle cam. The tension of the closing springs rotates the operating crank, causing the breechblock carrier to swing the breechblock closed, rotate, and lock.

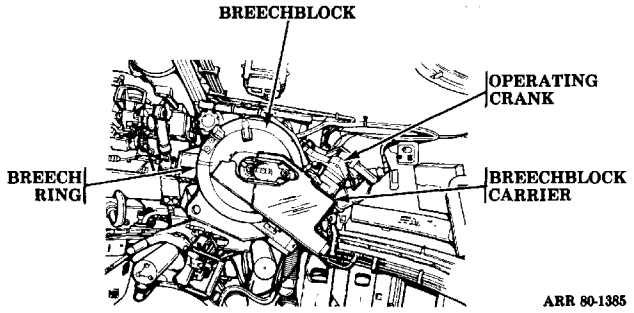

A. OPENING THE BREECH MANUALLY

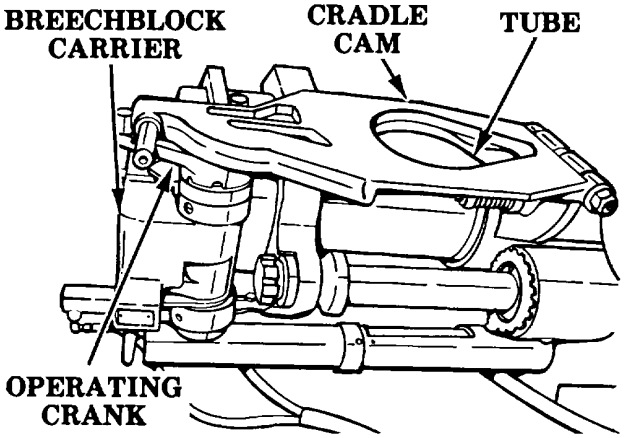

B. OPENING THE BREECH AUTOMATICALLY

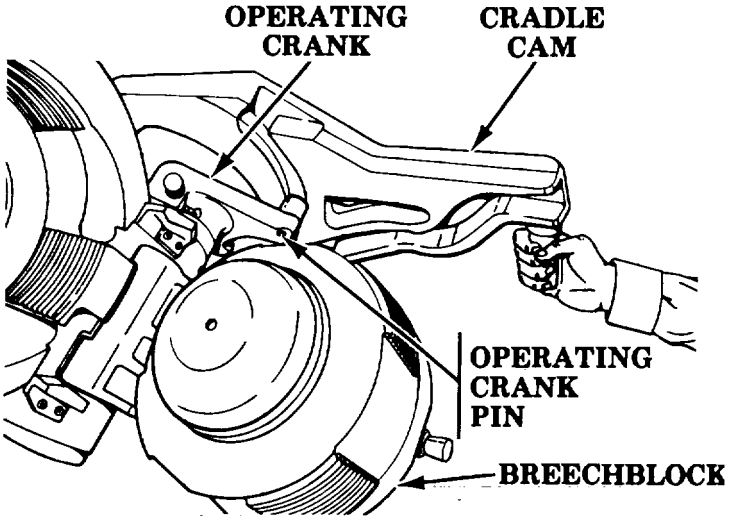

C. CLOSING THE BREECH

Figure 4-22. Opening and closing the breech (semiautomatic carrier breech operating mechanism).

b. Sliding-Wedge Breech Operating Mechanism. The breech operating mechanisms for horizontal and vertical sliding-wedge breechblocks are manually operated and are similar in operation. The motion of the breechblock is used to activate the mechanism for extracting the cartridge case after firing.

(1) Horizontal sliding-wedge breech operating mechanism. The horizontal sliding-wedge breech operating mechanism is operated by means of the operating handle.

(a) When the operating handle is unlatched and rotated to the rear, it cams the breechblock horizontally to the right, thereby opening the breech (view A, fig 4-23).

(b) After a round is inserted in the chamber, the breechblock is cammed back into the breech ring when the operating handle is manually rotated forward (view B).The front face of the breechblock is beveled and, as the breech is closed, the beveled face contacts the base of the cartridge case and seats it in the chamber. When the breech is completely closed, the operating handle engages and is locked in the closed position by a catch located in the upper right corner of the breech ring.

(c) The extractor (fig 4-24) is seated in the bottom of the breech ring under the breech-block. As the breech is closed, the camming groove in the breechblock rotates the extractor about its seat in the breech ring until the lip end of the extractor is in a recess in front of the rim of the cartridge case (view A, fig 4-25).When the breech is opened, the extractor lip, which is engaged in the rim of the cartridge case, is cammed sharply to the rear, thereby extracting the cartridge case from the chamber (view B).

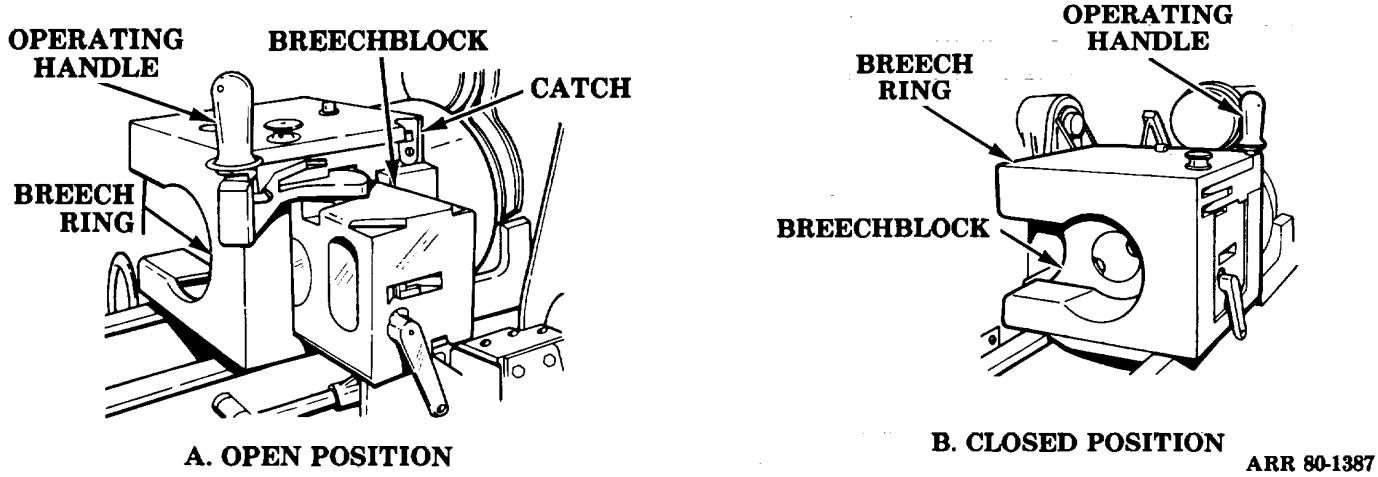

Figure 4-23. Horizontal sliding-wedge breech operating mechanism.

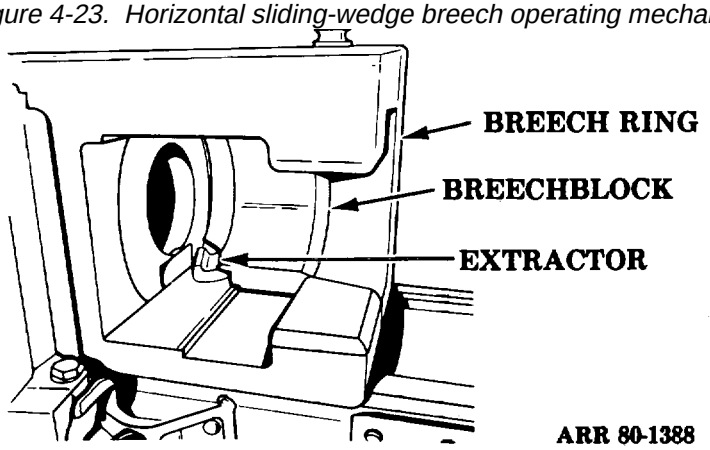

Figure 4-24. Extractor.

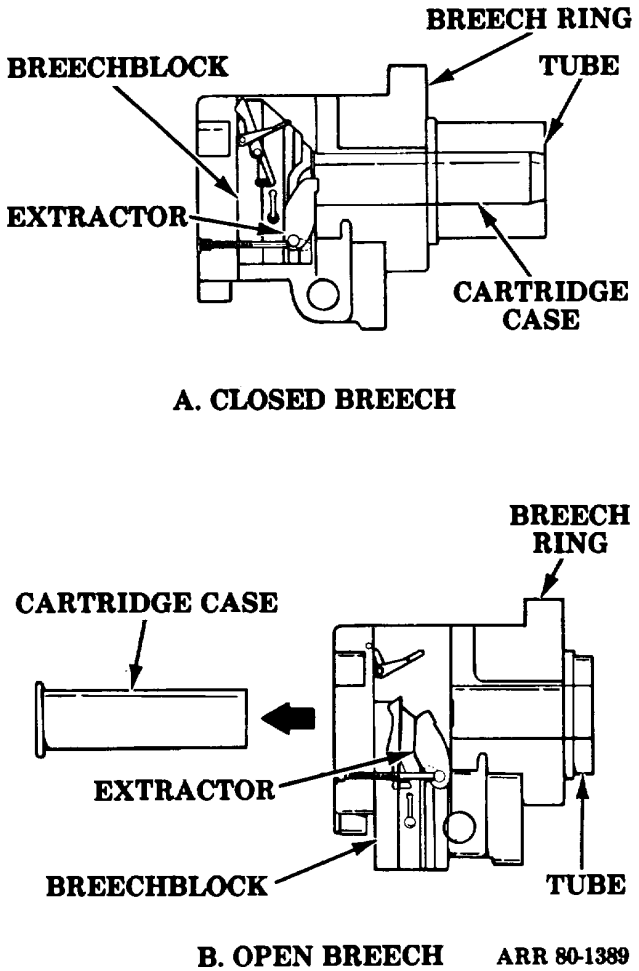

Figure 4-25. Extracting a cartridge case.

(2) Vertical sliding-wedge breech operating mechanism (fig 4-26). The vertical sliding-wedge breech operating mechanism is operated by the operating handle. A coil spring in the breechblock operating shaft functions as an equilibrator to equalize the effort required to open and close the breechblock.

(a) When the operating handle is unlatched and rotated to the rear, the breechblock drops, opening the breech (view A, fig 4-26).When the breechblock drops, it moves the extractors to the rear, extracting the fired cartridge case, and loads the coil spring in the operating shaft. The downward motion of the breechblock also cocks the percussion mechanism. The extractors remain in the rearward position to lock the breechblock in the open position.

(b) When a round is inserted in the chamber, the extractors are pushed forward, unlocking the breechblock. The operating handle is rotated forward to close the breech (view B). When the breechblock is completely closed, the operating handle engages and is locked in the closed position by a catch in the operating handle stop.

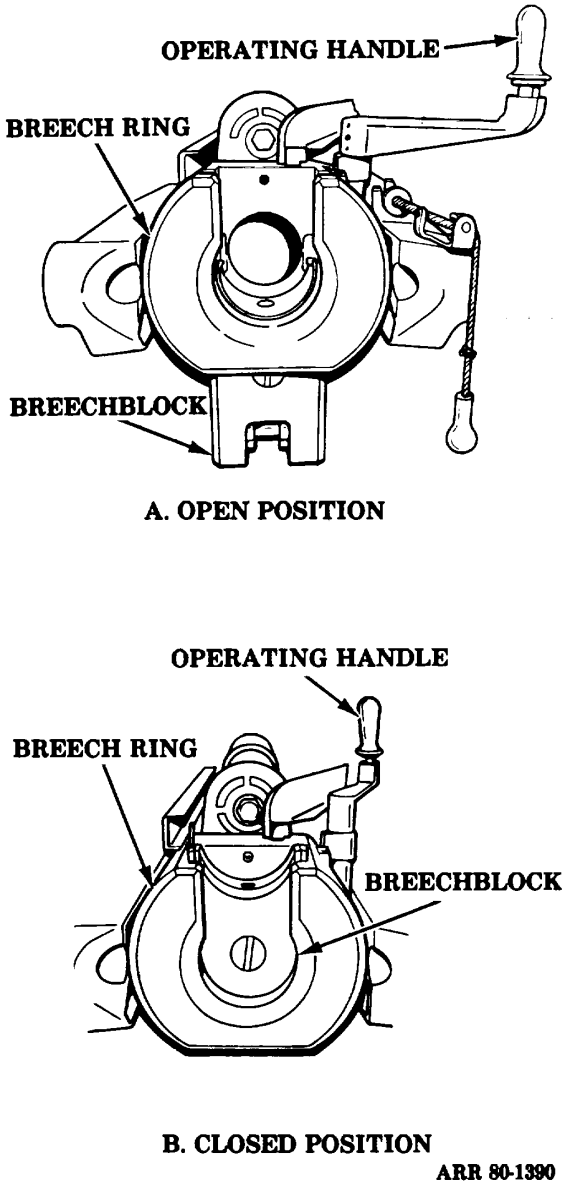

Figure 4-26. Vertical sliding-wedge breech operating mechanism.

4-12. Firing Mechanism. The firing mechanism is a device for initiating the ammunition primer. The primer then sets off the igniter which ignites the propelling charge of the ammunition. Current field artillery weapons have a percussion firing mechanism activated by a lanyard. The percussion firing mechanism is also characterized by a firing pin which strikes the primer of a round. The three types of percussion firing mechanisms are continuous-pull, inertia, and percussion-hammer.

a. Continuous-Pull Firing Mechanism. One continuous pull of the lanyard initiates the complete functioning of the firing mechanism. This safety feature ensures that the firing mechanism is not cocked except at the instant before firing. The M13 and M35 firing mechanisms are the two continuous-pull firing mechanisms in use.

(1) M13 firing mechanism (fig 4-27). Referred to as the firing lock, this firing mechanism is used on the M101A1 howitzer and functions as follows:

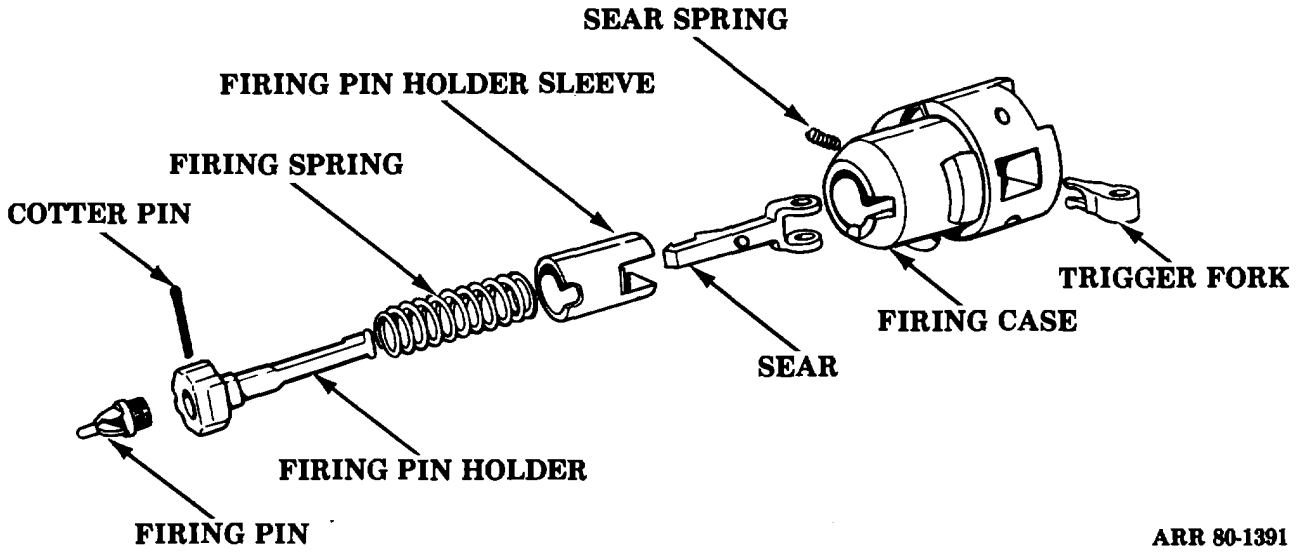

Figure 4-27. M13 firing mechanism.

(a) Pulling the lanyard causes the trigger shaft to rotate, which forces the trigger fork forward (view A, fig 4-28, sheet 1).This pushes the firing pin holder sleeve forward, compressing the firing spring.

(b) The sleeve continues to be forced forward until it trips the sear (view B).

(c) This releases the firing pin holder, allowing the compressed firing spring to expand and snap the firing pin forward (view C, sheet 2).The firing pin detonates the primer in the cartridge case, which ignites the propelling charge.

(d) When the pressure on the trigger fork is released, the firing spring continues to expand forward and rearward with equal force. The forward pressure is applied to the middle rear surface of the trigger fork by the T on the firing pin holder (view D). The rearward pressure is applied to the top front surface of the trigger fork by the firing pin holder sleeve.

(e) Since the rearward pressure exerted to the top front surface acts on a longer lever arm than that of the forward pressure, the trigger fork rotates rearward and moves the firing pin holder rearward until the sear again engages the firing pin holder (view A, sheet 1).

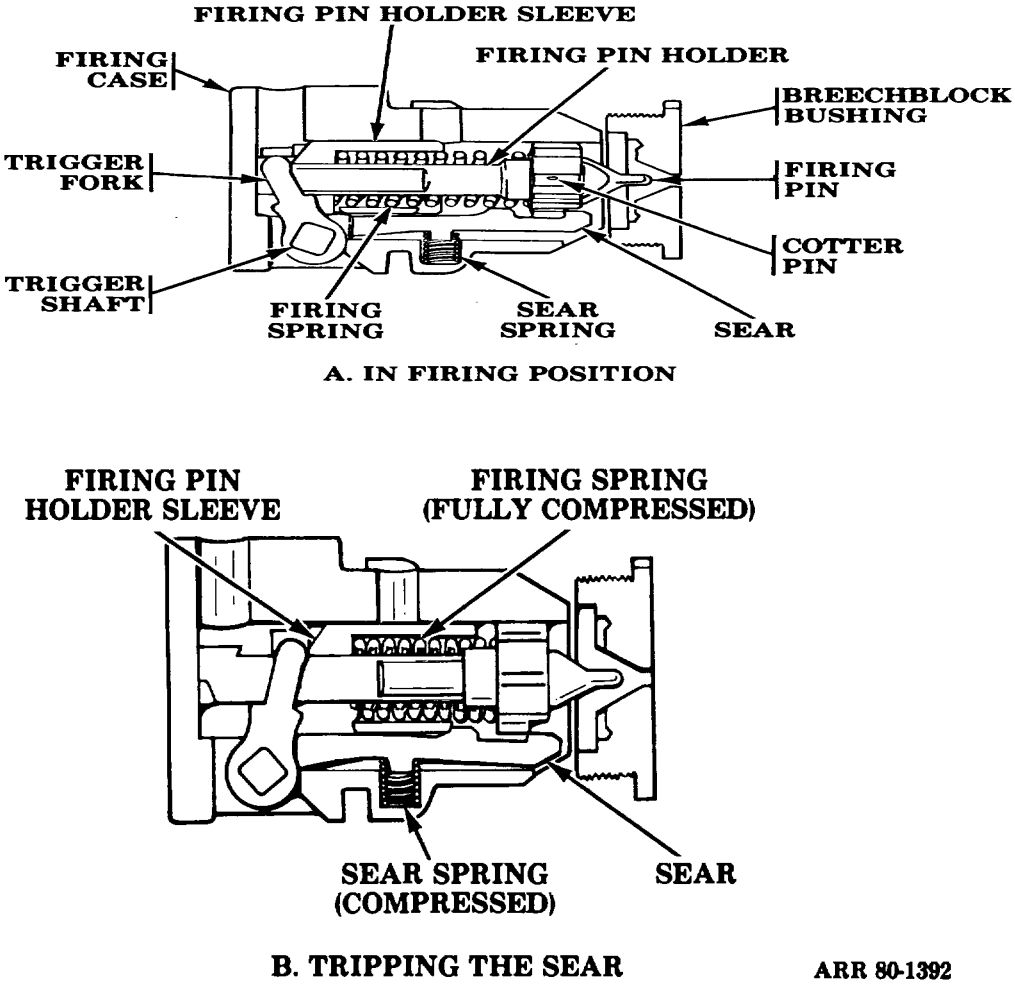

Figure 4-28. Continuous-pull firing mechanism operation (1 of 2).

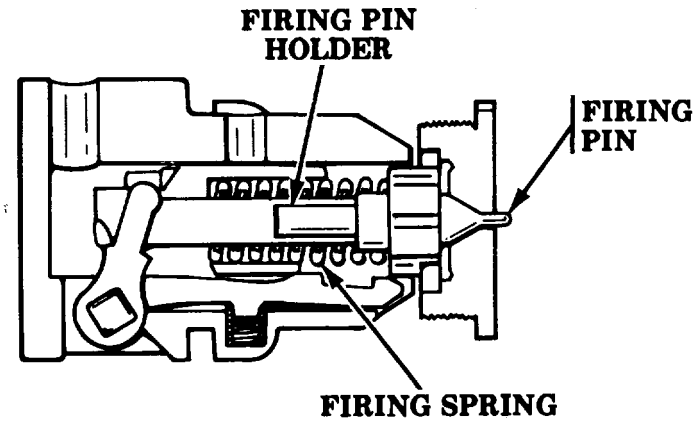

C. AT MOMENT OF FIRING

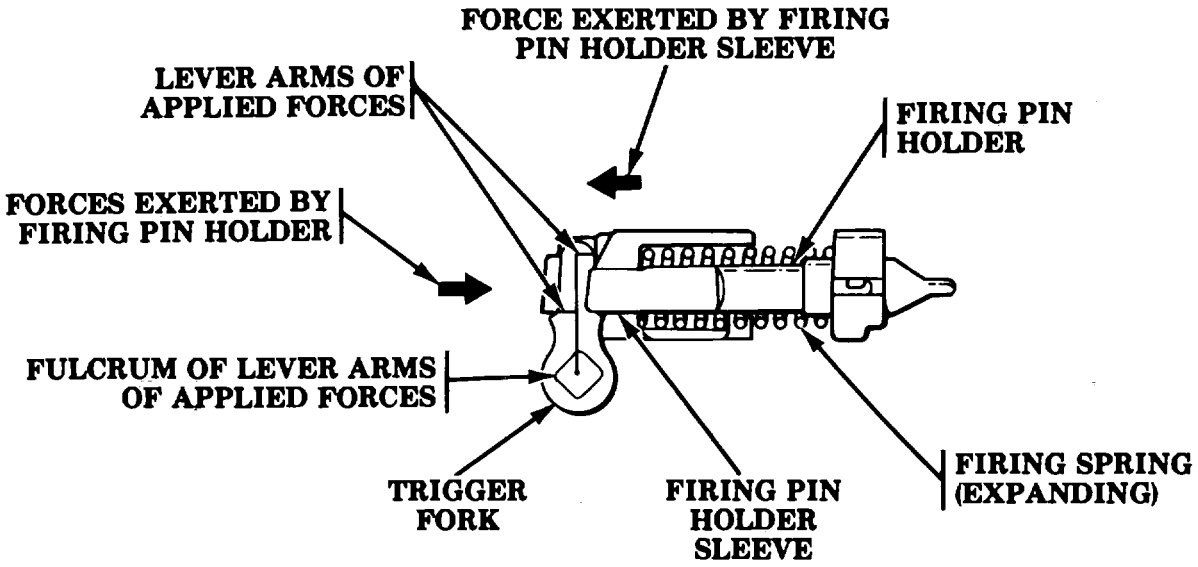

D. FORCES FOR AUTOMATIC COCKING

ARR 80-1393

Figure 4-28. Continuous-pull firing mechanism operation (2 of 2).

(2) M35 firing mechanism (fig 4-29). The functioning of this firing mechanism is very similar to the M13 firing mechanism. It is used on the M109/M109A1 howitzer, the M110/M11OA1 howitzer, the M198 howitzer, and the M107 gun.

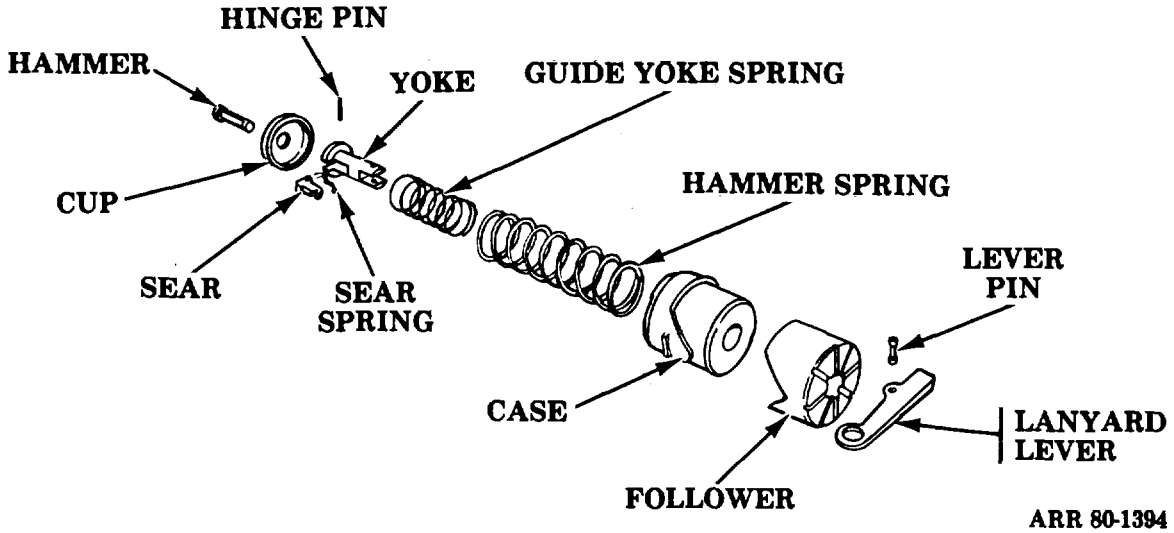

Figure 4-29. M35 firing mechanism.

b. Inertia Firing Mechanism (Fig 4-30).This firing mechanism has a heavy firing pin and guide assembly which moves forward by inertia to strike the primer after the action of the firing pin has stopped. The firing pin and guide assembly is retracted by a separate retracting spring. The firing mechanism cocks when the breechblock is opened and remains cocked during loading and closing of the breechblock. The inertia firing mechanism, used on the M102 howitzer, functions in three phases:

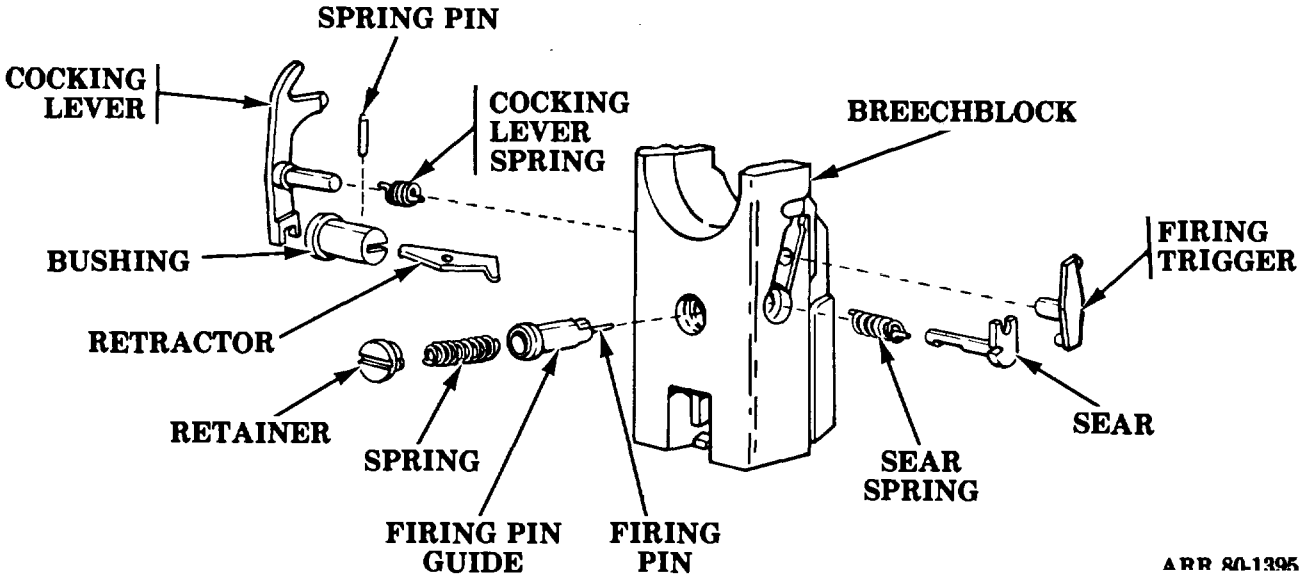

Figure 4-30. Inertia firing mechanism.

(1) Cocking phase (view A, fig 4-31).The cocking lever is rotated. The lower end of the lever pushes against a lug in the guide, moving the guide rearward and compressing the firing spring until the sear lug passes the sear. The action of the sear spring moves the sear across the guide in front of the sear lug. The fully compressed firing spring pushes the guide and firing pin forward. The sear lug pushes against the sear, which prevents the guide from flying forward. The weapon is now ready for firing.

(2) Firing phase (view B). When the lanyard is pulled, the firing trigger is rotated, which in turn causes the sear to revolve. The rotation of the sear causes the engaging surfaces to tip over, releasing the inertia mechanism. The sear releases the guide, which moves forward under the pressure of the firing spring. The firing spring stop strikes the forward end of the breechblock, inertia carrying the guide forward until it strikes the breechblock; at the same time, the firing pin hits the primer and fires the weapon. The forward motion of the firing pin reduces the distance between the shoulder on the firing pin and the firing spring stop, thereby compressing the retracting spring between them.

(3) Retracting phase (view C). The retracting pin pulls back or retracts the firing pin into the breechblock to keep the firing pin from being sheared off as the breechblock is opened. The compressed retracting spring pushes back on the firing pin and is restrained only at its forward end by the firing spring stop and breechblock. The guide, with firing pin attached, is free to move to the rear. The compressed retracting spring expands, pulling the firing pin back into the breechblock. The system is then at rest, ready for subsequent cocking and firing.

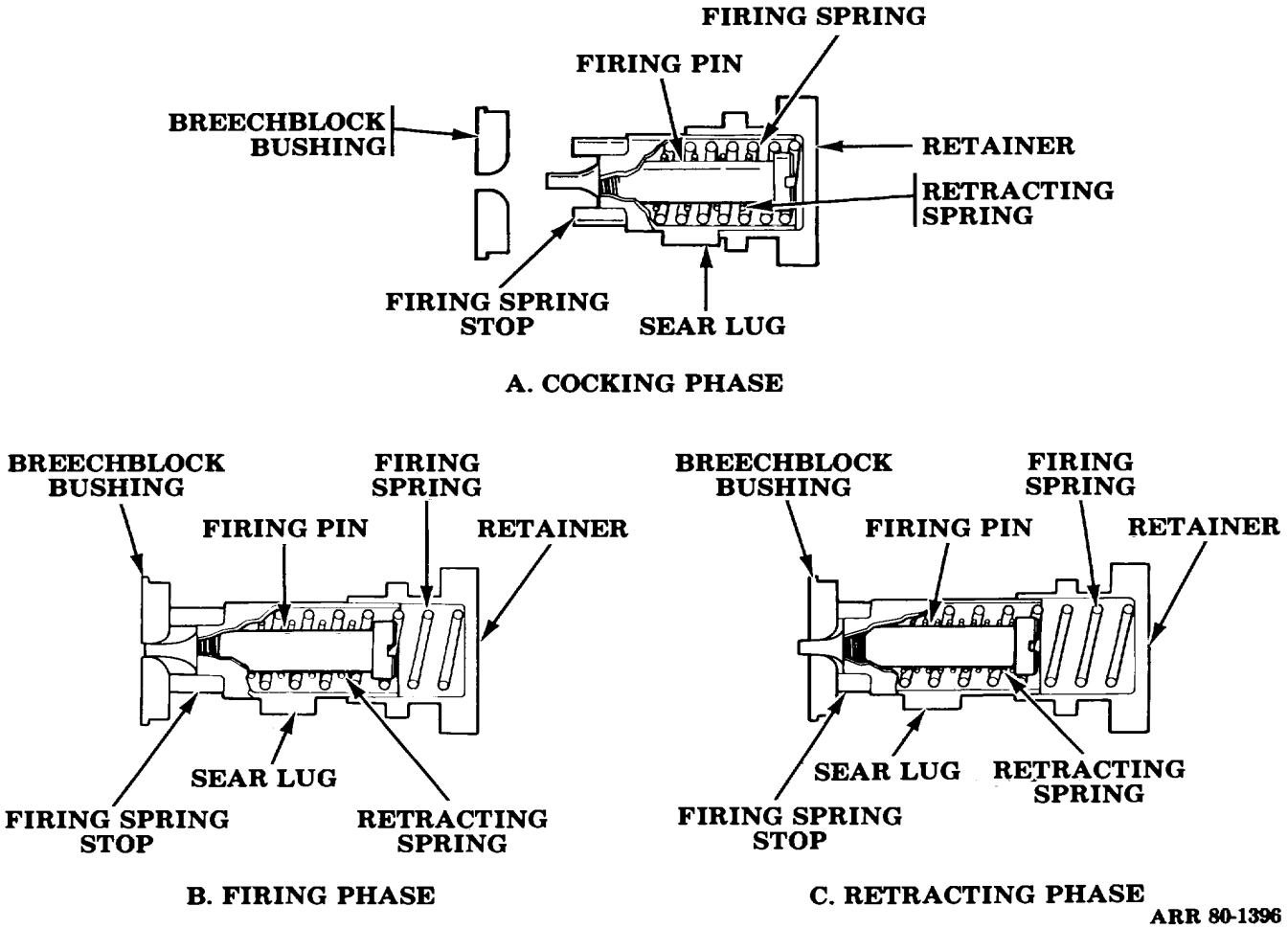

Figure 4-31. Inertia firing mechanism operation.

c. Percussion-Hammer Firing Mechanism (Fig 4-32). This firing mechanism has a hammer which, when actuated by a pull on a lanyard, strikes the firing pin and fires the weapon. The percussion-hammer firing mechanism, used on the M114A1 howitzer, functions as follows:

(1) A primer is inserted in the primer holder in the front face of the firing mechanism block (fig 4-32).

(2) The firing mechanism block is screwed into the breechblock (view A, fig 4-33).

(3) To fire, the lanyard is pulled (view B). When the lanyard is pulled, the hammer strikes the firing pin, which then strikes the primer.

(4) The compressed firing pin spring returns the firing pin to its normal position (fig 4-32).

(5) After firing, the firing mechanism block is unscrewed from the breechblock to remove the fired primer.

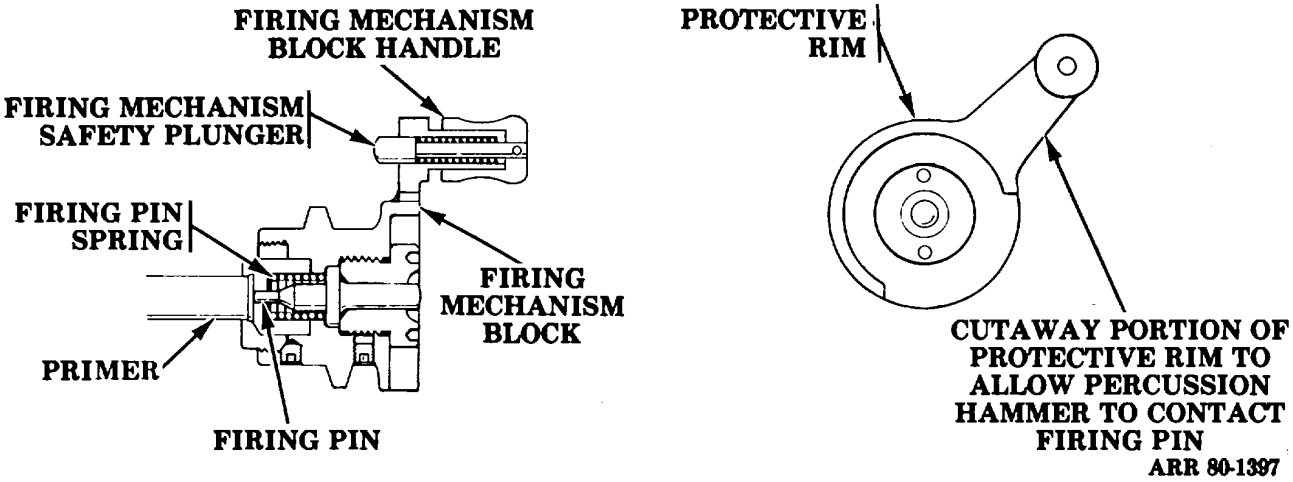

Figure 4-32. Percussion-hammer firing mechanism.

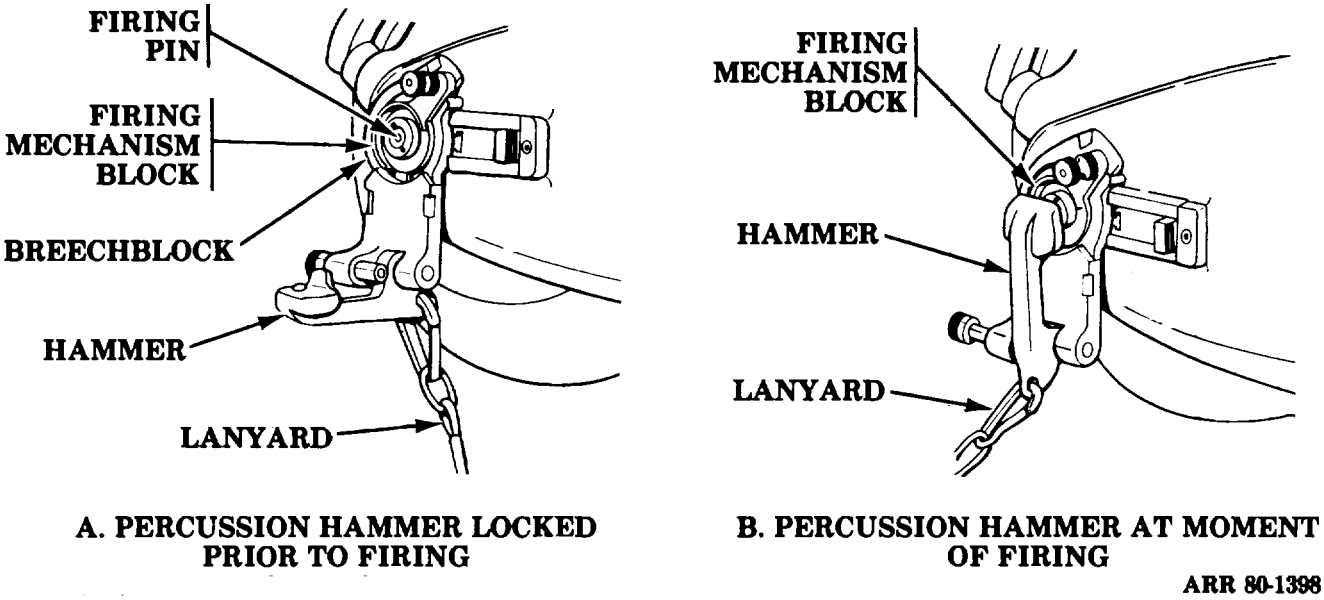

Figure 4-33. Percussion-hammer firing mechanism operation.

4-13. Obturator.

a. Obturation. Obturation is the prevention of the rearward passage of gases into the threads and other parts of the breech mechanism. These gases, which have great velocities and high temperatures, would soon erode and ruin the breech mechanism. This would affect the ballistics of the weapon if a means of obturation were not introduced.

(1) In weapons using semifixed ammunition, obturation is accomplished by means of the cartridge case. When the round is fired, the pressure of the propellant gases expands the cartridge case, forming a tight seal against the walls of the chamber. This prevents the gases from escaping to the rear. When the gas pressure drops, the cartridge case contracts sufficiently to permit easy extraction.

(2) In weapons using separate-loading ammunition, an obturating device, such as the DeBange obturator, must be included in the breech mechanism to prevent the rearward escape of propellant gases.

b. DeBange Obturator.

(1) Components. The obturator, which passes through the breechblock (fig 4-34), is free to move back and forth. Between the mushroom-shaped head of the spindle and the breechblock is the obturator pad (fig 4-35) made of asbestos and nonfluid oil or of neoprene. Two steel split rings, ground accurately to bear against the walls of the bore, encircle the obturator pad. The obturator pad, split rings, and spindle do not rotate with the breechblock during closing or opening, but the breechblock rotates about the spindle as an axle.
There is a small split ring around the spindle to prevent the escape of obturator pad composition and gas. A disk forms a bearing between the obturator pad and breechblock.

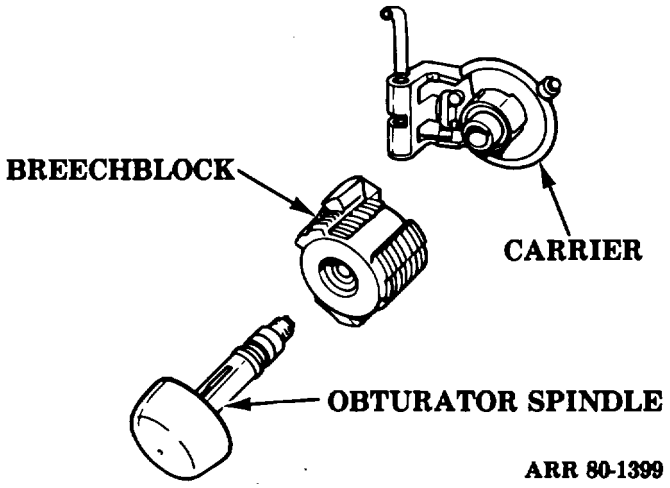

Figure 4-34. Obturator spindle, breechblock, and carrier.

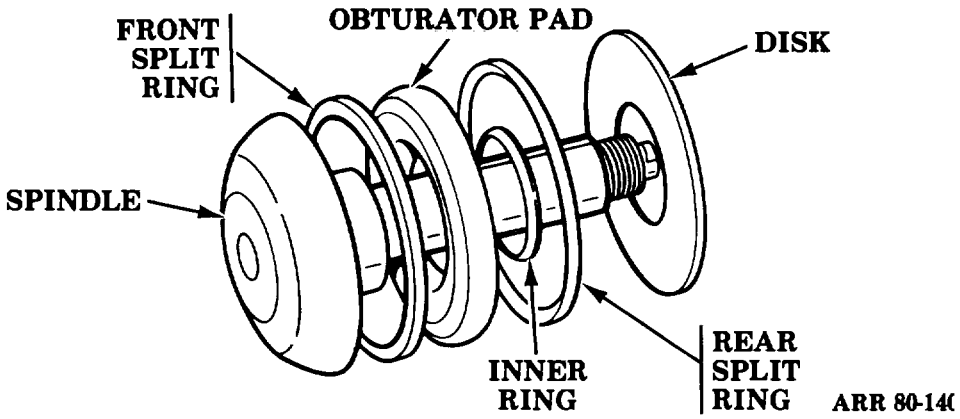

Figure 4-35. Obturator spindle, breechblock, and carrier.

(2) Operation. When the weapon is fired, the gas pressure acts against the head of the spindle, moving the spindle back and compressing the pad between the rear of the mushroom head and the front of the breechblock itself (view A, fig 4-36). This causes the pad to expand radially against the split rings, which expand to make a gas-tight seal against the bore wall. After firing, when the gas pressure is reduced, the pad returns to its normal shape (view B), moving the spindle forward. The split rings contract to their original size, and the breechblock can then be opened.

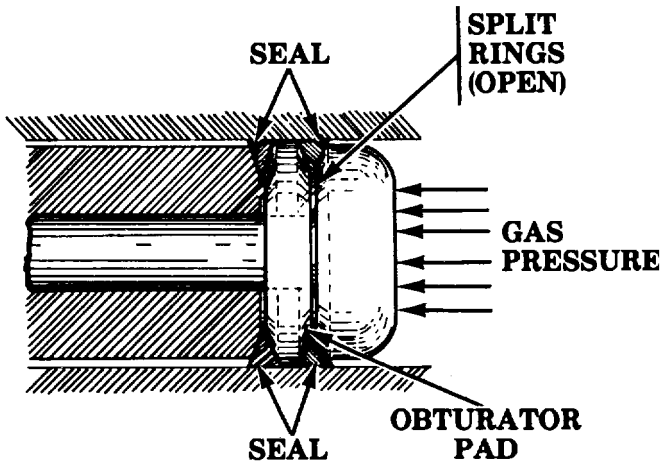

A. UNDER GAS PRESSURE (FIRING).

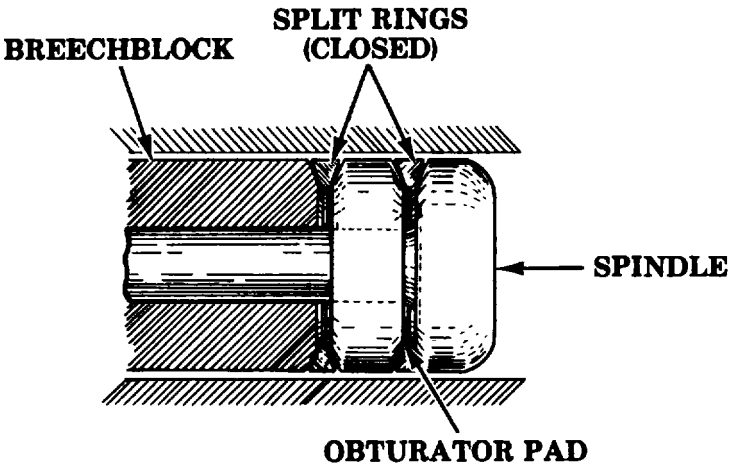

B. NORMAL. ARR 80-1401

Figure 4-36. Obturator operation.

CHAPTER 5

LOADING AND RAMMING MECHANISM

Section I. HAND LOADING AND RAMMING DEVICES

5-1. Hand Loading and Ramming.

a. Weapons firing semifixed ammunition, such as the M101/M101A1 howitzer and the M102 howitzer are loaded manually (fig 5-1). The fuzed projectile is seated in the chamber by the action of the breechblock when the breech is closed.

b. Some weapons firing separate-loading ammunition, such as the M114A1 howitzer and the M198 howitzer, are loaded manually. For speed and convenience, the projectile is placed on a loading tray and loaded into the tube, using a loading rammer (fig 5-2). This method is also used when power rammers fail to function. The ram must seal the rotating bands on the projectile with the forcing cone of the tube to prevent fall-back when the tube is elevated.

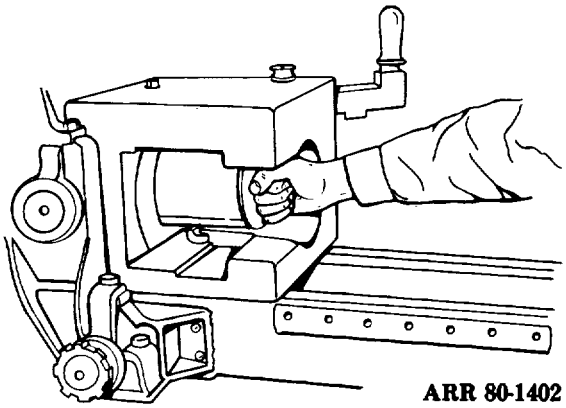

Figure 5-1. Hand loading and ramming for weapons firing semifixed ammunition.

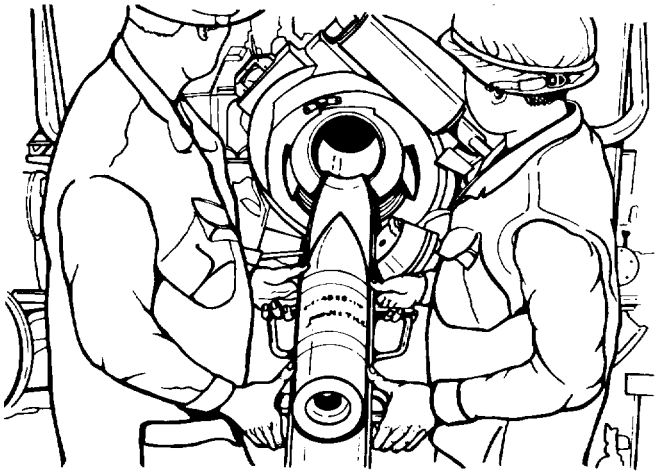

A. LOADING

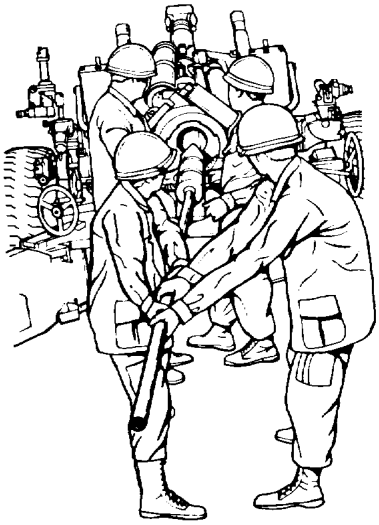

B. RAMMING

ARR 80-1403

Figure 5-2. Hand loading and ramming for weapons firing separate-loading ammunition.

Section II. POWER LOADING AND RAMMING MECHANISM

5-2. General. There are two types of hydraulically powered loading and ramming mechanisms.

a. The loader and rammer mechanism (fig 5-3) is designed to lift the projectile onto the rammer assembly and ram the projectile into the tube. The M110/M101A1 howitzer and the M107 gun use this loader and rammer mechanism.

b. The rammer mechanism (fig 5-4) is designed to ram the projectile into the tube. The projectile must be manually placed on the rammer tray. The rammer mechanism is used on the M109/ M109A1 howitzer.

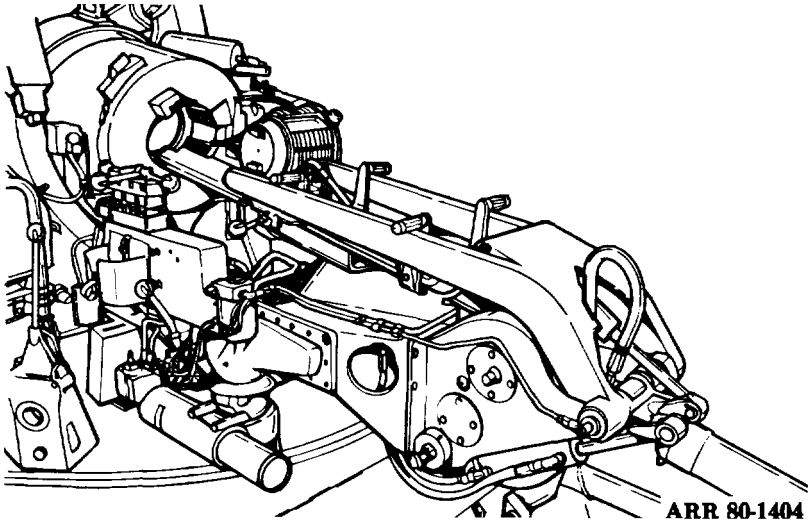

Figure 5-3. Loader and rammer mechanism.

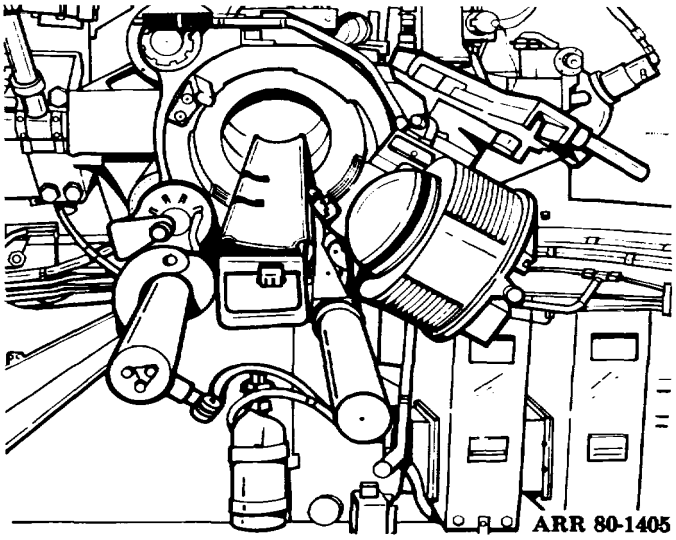

Figure 5-4. Rammer mechanism.

5-3. Loader and Rammer Mechanism.

a. General. The hydraulic loader and rammer mechanism lifts a projectile from the rear or left side of the vehicle, positions it, and rams it into the chamber.

(1) The loader and rammer mechanism is bolted to a support arm and traversing cylinder assembly mounted on the top carriage (fig 5-5). This mounting allows the loader and rammer mechanism to be traversed during the loading operation.

(2) The vehicle hydraulic system provides the power for operation. If a hydraulic power failure occurs, auxiliary power is provided by a hand pump and handcranks.

b. Components. The loader and rammer mechanism (fig 5-6) consists of a trough rammer, lifting tray, loader arm, lifting cylinders, rammer chain, rammer chain housing, rammer gearcase housing, rammer cylinder, and traverse cylinder.

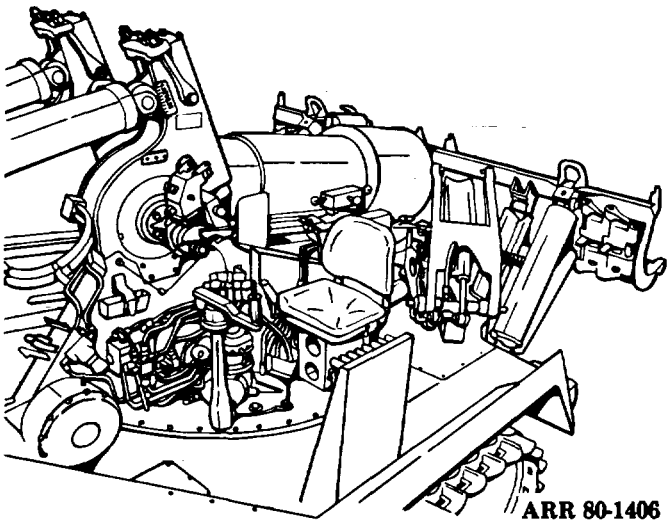

Figure 5-5. Loader and rammer mechanism (stowed position).

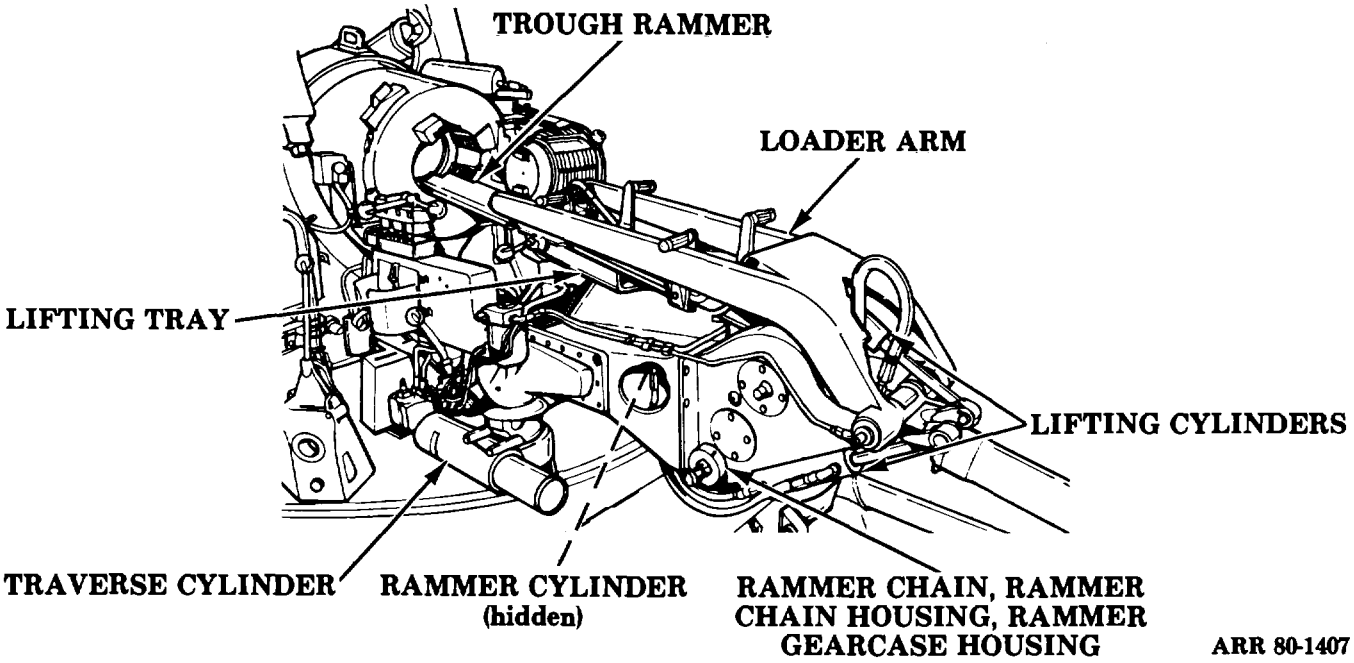

Figure 5-6. Loader and rammer mechanism components.

c. Controls. Most of the controls are located to the rear and right of the gunner's seat.

(1) Lifting tray handles (fig 5-7). There are four lifting tray handles on the lifting tray.

(2) Loader handle (fig 5-7). The loader handle on the right side of the trough is used to slide the trough forward so the slide trough control release handle on the left side of the trough can latch properly.

(3) Trough control release handle (fig 5-7). The trough control release handle on the left side of the trough engages the catch to permit rammer operation.

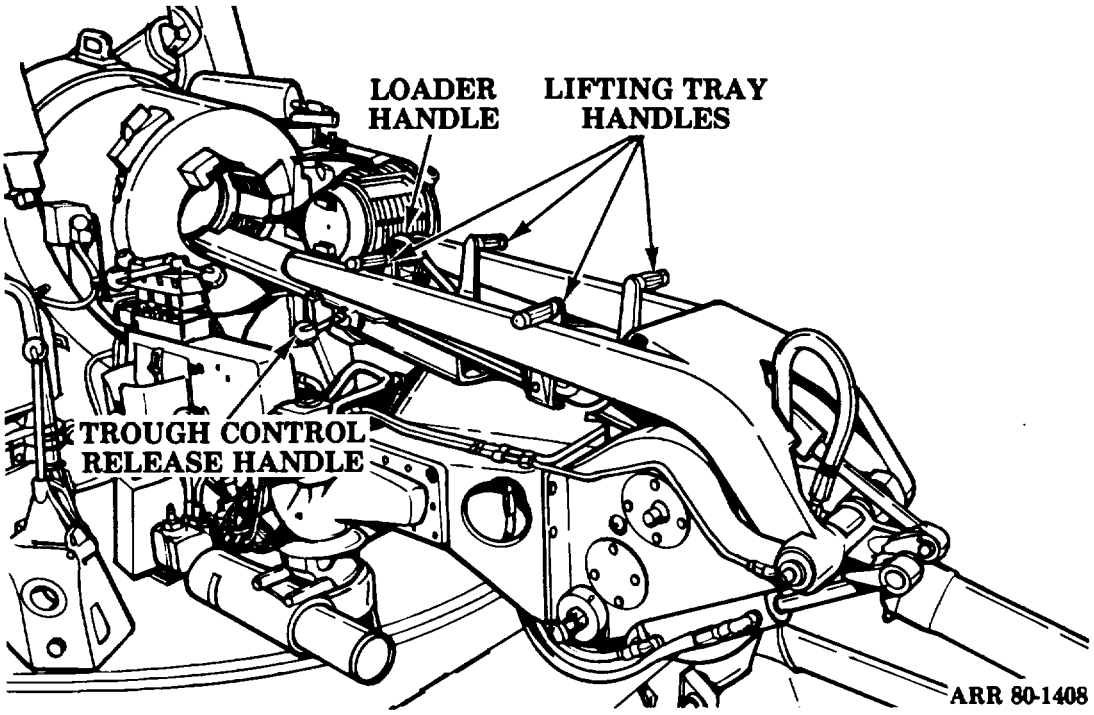

Figure 5-7. Loader and rammer mechanism controls.

(4) Hand pump (fig 5-8). The hand pump on the right side of the turret is used to swing the loader and rammer mechanism into position and to lift the projectile during a hydraulic power failure.

(5) Handcranks. The handcranks are inserted in the ends of the rammer head shaft for manual ramming during hydraulic power failure (view A, fig 5-9). The handcranks are stowed in the bracket to the right of the rammer housing (view B).

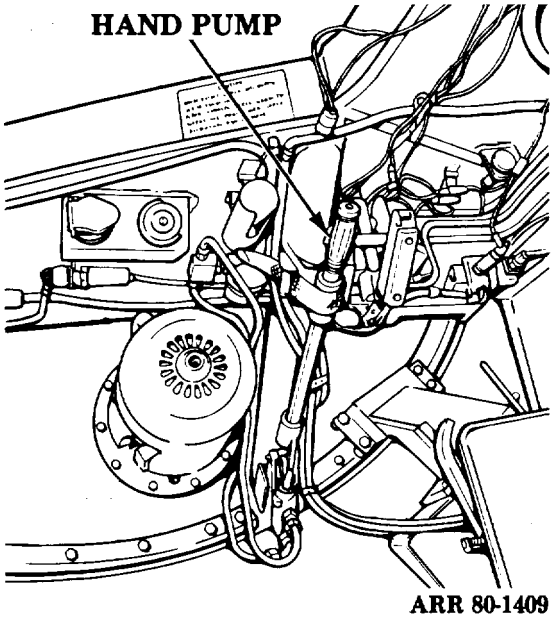

Figure 5-8. Hand pump.

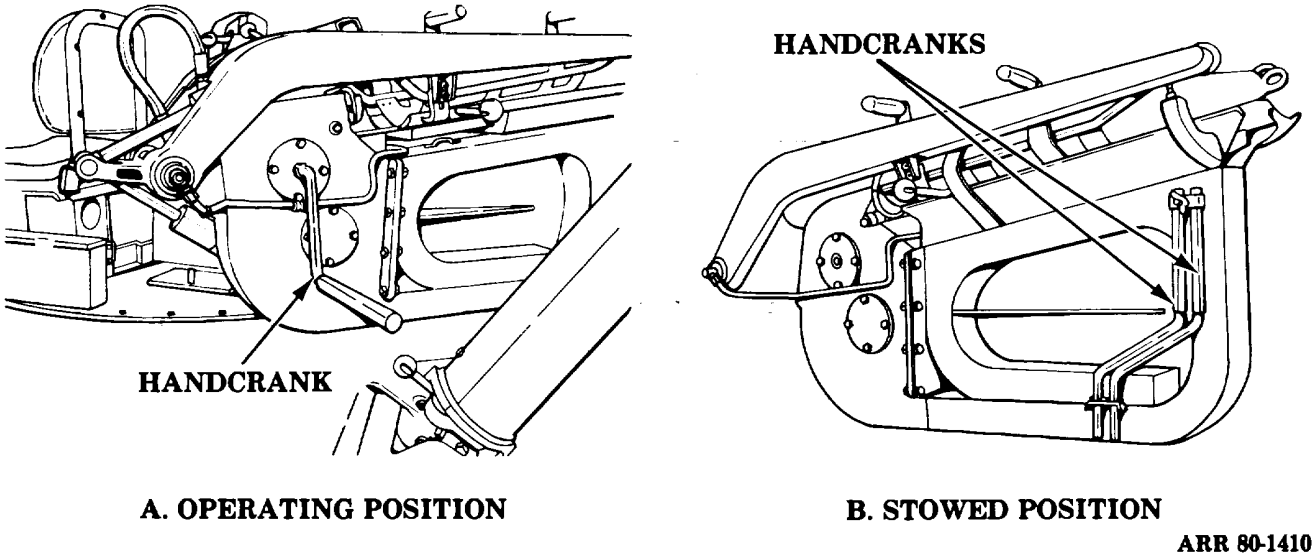

Figure 5-9. Handcranks.

(6) Hydraulic pressure gage (fig 5-10). Located on the forward end of the rammer control manifold, the hydraulic pressure gage is used to monitor the hydraulic system. The gage registers the pressure of the main hydraulic system and the pressure supplied to the control valves.

(7) Rammer control valve (fig 5-10). The rammer control valve is located on the rammer control manifold mounted on a bracket on the left trunnion. It operates a hydraulic cylinder-operated rammer chain which rams the projectile into the chamber.

(8) Loader control valve (fig 5-10). The loader control valve, located on the rammer control manifold, operates the loader arm which raises a projectile to the trough.

(9) Swing control valve (fig 5-10). The swing control valve, located on the rammer control manifold, allows the loader and rammer mechanism to be swung in either the load position behind the cannon or the stowed position behind the gunner's seat (fig 5-5).

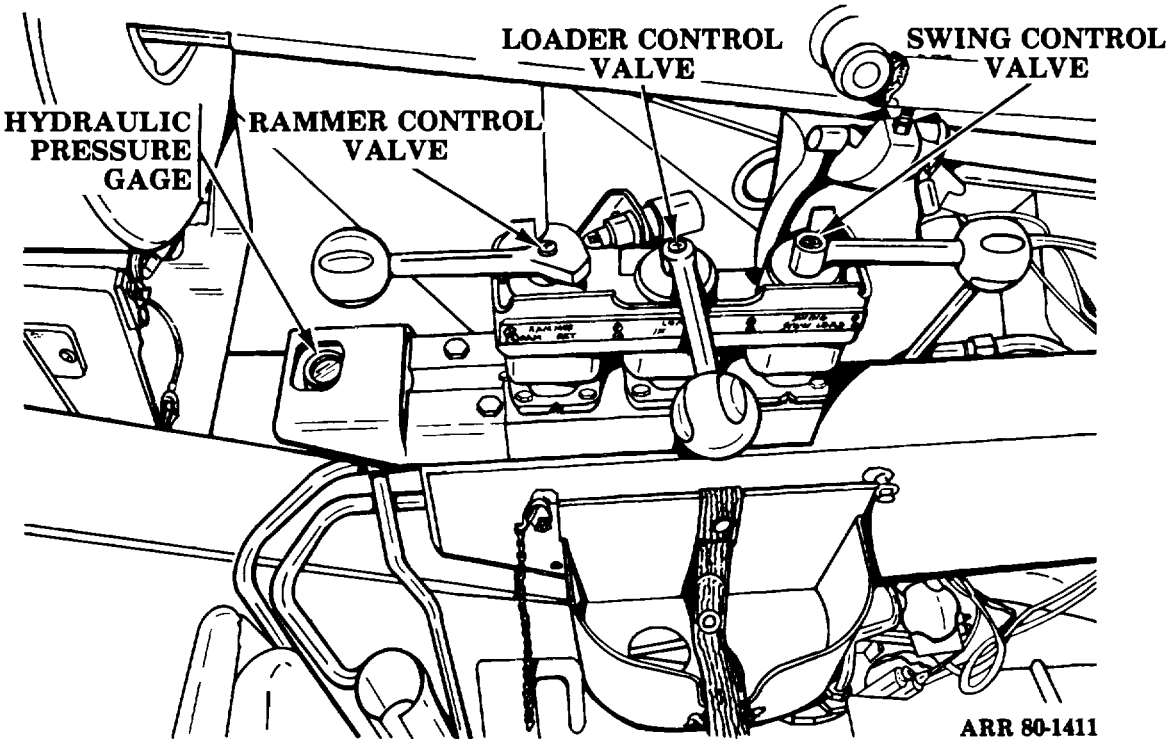

Figure 5-10. Rammer control manifold.

5-4. Rammer Mechanism.

a. General. The rammer mechanism only rams the projectile. The vehicle hydraulic system provides the power for operation.

b. Operation. The projectile must be manually placed and positioned on the ramming tray. When the rammer is placed in the ram position, the activating of a series of switches on the rammer mechanism allows electrical power to pass through the rammer control box and energize a solenoid in the hydraulic system. When the solenoid is energized, hydraulic oil under pressure enters the rammer cylinder, driving the rammer, which rams the projectile into the tube. A time-delay relay in the rammer control box automatically opens the electrical circuit, and the rammer is retracted.

c. Components. The rammer mechanism (fig 5-11) consists of the rammer support, rammer support shaft, rammer tray, rammer tray support, rammer cylinder, and rammer swivel head.

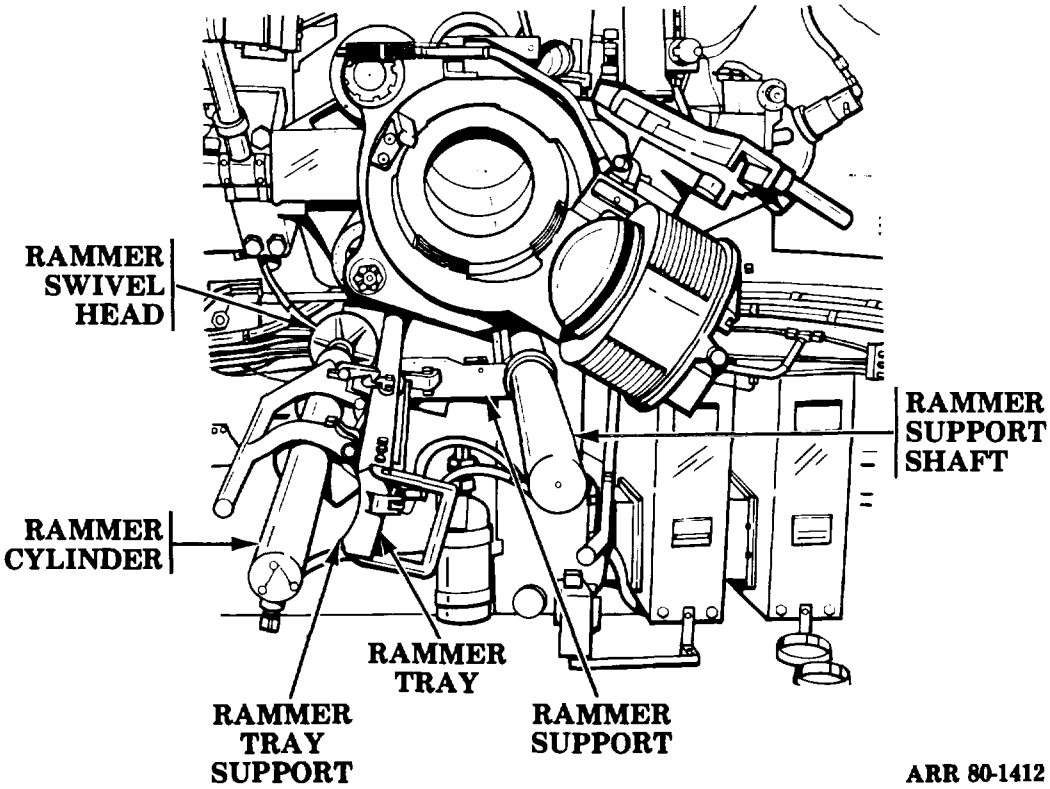

Figure 5-11. Rammer mechanism components.

d. Controls.

(1) Cylinder-release handle (fig 5-12). The cylinder-release handle is used to rotate the rammer cylinder from the load position to the ram position. When in the ram position, the cylinder latch secures the cylinder during ramming. Lifting the cylinder-release handle releases the latch and cylinder so they can be rotated to the load position.

(2) Main release handle (fig 5-12). The main release handle is used to unlatch the rammer from the stowed position, to pull the rammer to the rear on the rammer support shaft, and to assist in lifting the rammer into the ram position.

(3) Rollover switch (fig 5-12). The rollover switch is activated when the rammer cylinder is rotated to the load position.

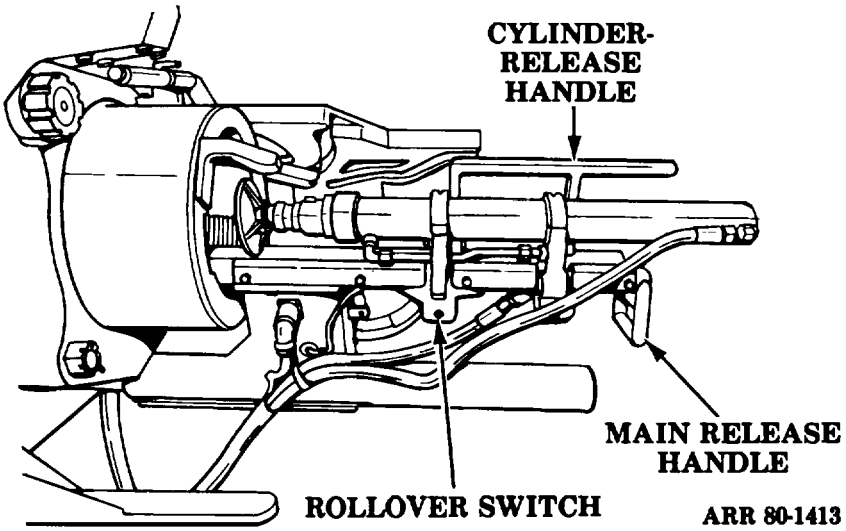

Figure 5-12. Rammer Mechanism controls

(4) Latch switch (fig 5-13).The latch switch, activated when the rammer cylinder is latched in the ram position, causes the rammer to ram the projectile.

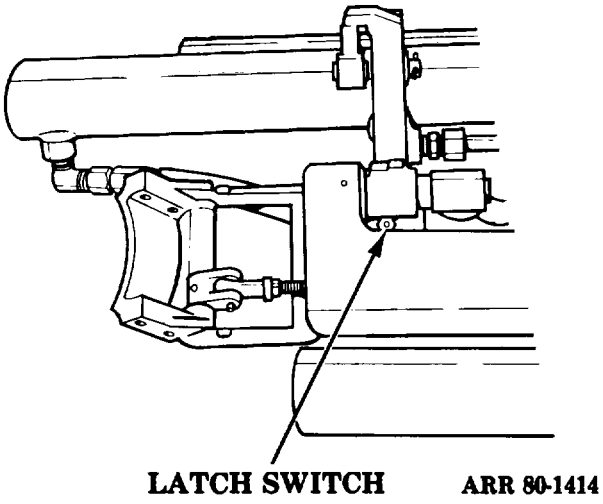

Figure 5-13. Latch switch.

(5) Limiting switch (fig 5-14). The limiting switch is a safety switch that is closed when the rammer is in the ram position.

(6) Rammer control box (fig 5-15). The rammer electrical circuit is controlled by the rammer control box which contains the holding relay and the time-delay relay. Current from the vehicle electrical system enters the rammer control box, where it is fed to the rammer control switches. When all the switches are activated, current is fed to the solenoid which activates the rammer. The holding relay keeps the rammer extended until the time-delay relay opens the circuit and the rammer is retracted.

(7) Solenoid (fig 5-16). The solenoid operates the hydraulic spool valve. When the solenoid is activated, a plunger in the solenoid extends through the bottom of the solenoid. This plunger pushes and holds the hydraulic spool valve in the open position. When the circuit is opened, the spool valve is returned to the closed position by a coil spring under the spool.

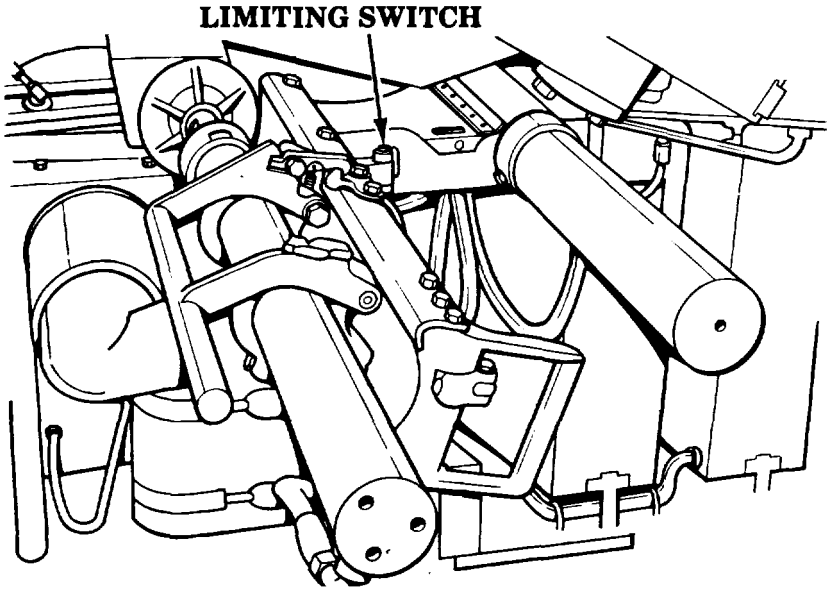

Figure 5-14. Limiting switch.

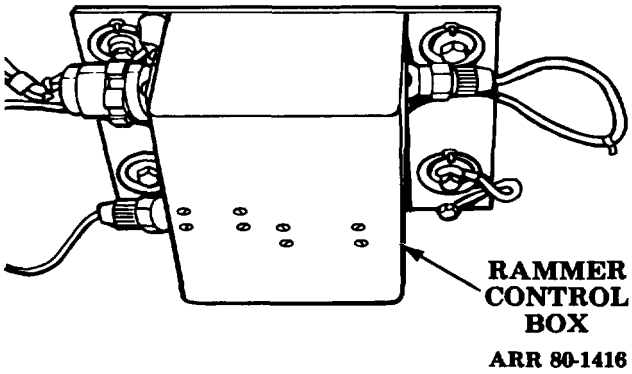

Figure 5-15. Rammer control box.

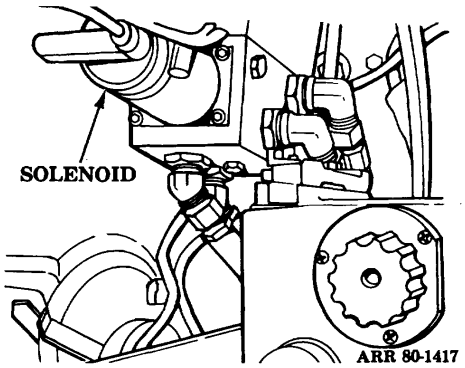

Figure 5-16. Solenoid

CHAPTER 6

RECOIL MECHANISM

Section I. GENERAL

6-1. Definitions.

a. Recoil. Recoil is the rearward movement of the cannon and connecting parts after the weapon is fired. It is caused by **a** reaction to the forward motion of the projectile and hot gases. The momentum of the cannon and other recoiling parts is equal to the momentum of the projectile and the propelling gases. The energy required to destroy this momentum and bring the cannon to rest may reach 100, 000 pound-feet or more in moderate size cannons.

b. Counterrecoil. Counterrecoil is the forward movement of the cannon and connecting parts returning to the in battery or firing position after recoil. It is caused by the energy transferred during recoil. In some weapons, counterrecoil helps to open the breech.

6-2. Purpose of the Recoil Mechanism.

a. The forces produced in a cannon tube when the weapon is fired are very great. If the cannon were mounted rigidly, without a recoil system, the carriage would not be able to withstand the loads imposed on it without rupturing, overturning, or displacing. With the carriages used until 100 years ago, firing a shot caused the entire gun and mount to jump violently (view A, fig 6-1).The gun crew would then have to return the weapon to its original aim before firing the next shot.

b. To bring carriage stresses down and to ensure stability, a recoil mechanism is put between the cannon and carriage. The recoil mechanism absorbs the energy of the recoiling parts (view B, fig 6-1) and reduces cannon jump, enabling the cannon to remain in position throughout the firing cycle. Only minor changes in aim are required to lay the weapon on target for the next shot, speeding up the rate of fire. The recoil mechanism also makes lighter carriages and mounts possible so that mobility of the weapon is greatly improved.

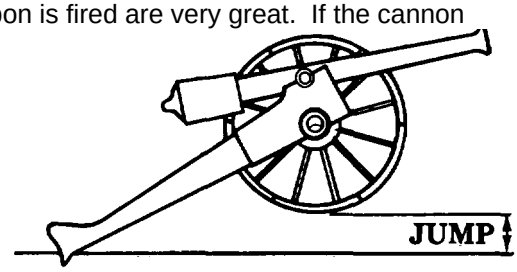

A. WITHOUT RECOIL MECHANISM

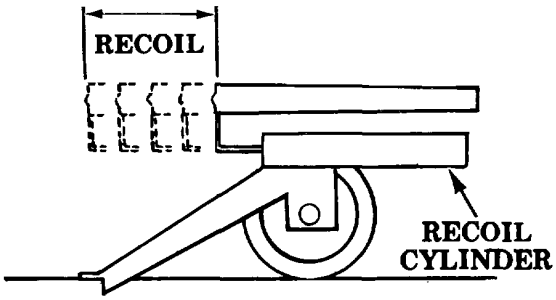

B. WITH RECOIL MECHANISM

ARR 80-1418

Figure 6-1. Effects of recoil force

Section II. BASIC PRINCIPLES OF OPERATION

6-3. General.

a. The recoil mechanism absorbs the energy of the recoiling parts in the distance of a few inches to a few feet. It dissipates some of the energy through the throttling of the recoil oil, by the friction of moving parts, and by transferring the remainder of the energy to a spring or compressed gas. When the sum of the energy dissipated and the energy transferred equals the original energy, the recoil motion stops and counterrecoil motion begins. The cannon is returned to the in battery position for further firing.

b. A recoil mechanism consists of a recoil brake, a counterrecoil mechanism, and a counterrecoil buffer. A replenisher is used on recoil mechanisms found in medium or heavy artillery weapons.

(1) Recoil brake. The recoil brake controls recoil and limits its length.

(2) Counterrecoil mechanism. The counterrecoil mechanism returns the recoiling parts to the in battery position.

(3) Counterrecoil buffer. The counterrecoil buffer slows the end of counterrecoil motion and prevents shock to the recoiling parts.

(4) Replenisher. The replenisher, used on independent recoil mechanisms, allows the oil in the recoil system to expand or contract. It also compensates for the loss of small amounts of recoil oil due to leakage from the oil seals.

6-4. Recoil Brake.

a. General. The recoil brake controls the recoil of a weapon. It consists of a piston which moves in a cylinder filled with oil. When the tube recoils, there is a relative motion between the piston and the cylinder. The recoil brake is attached to the weapon in one of the following ways:

(1) The piston is fixed to the carriage; the cylinder is attached to the tube and moves with it during recoil and counterrecoil.

(2) The piston is attached to the tube and moves with it during recoil and counterrecoil; the cylinder is fixed to the carriage.

NOTE

The following discussion of the operation of the recoil brake is based on the piston being attached to the tube.

b. Operation. The piston is pulled with the cannon as it recoils. As the piston moves to the rear, it applies pressure to the oil which is forced through grooves in the recoil cylinder or ports in the piston. The size of the openings is such that the oil cannot pass through fast enough to relieve entirely the pressure behind the piston. The oil, therefore, exerts force on the piston, which retards its motion. For a uniform recoil and gradual stopping of the cannon, the rate of oil flow must be controlled or throttled by varying the size of the openings through which the oil flows. Devices for throttling the oil are as follows:

(1) Throttling grooves. Throttling grooves (fig 6-2) are tapered slots or grooves cut into the recoil cylinder walls. The piston has no ports; the oil flows through the throttling grooves. The grooves are cut so that the depth is greatest at the beginning of recoil and tapers to zero at the end of recoil. Thus, the oil flows freely at first, allowing the cannon to recoil (view A). As the piston moves in the cylinder, the depth of the grooves decreases (view B), resulting in a corresponding decrease of oil flow and retardation of recoil. At the end of re coil (view C), the piston completely seals the cylinder, stopping the oil flow and bringing the tube to rest. Throttling grooves are used on the MI10/ M1110A1 howitzer and the M107 gun.

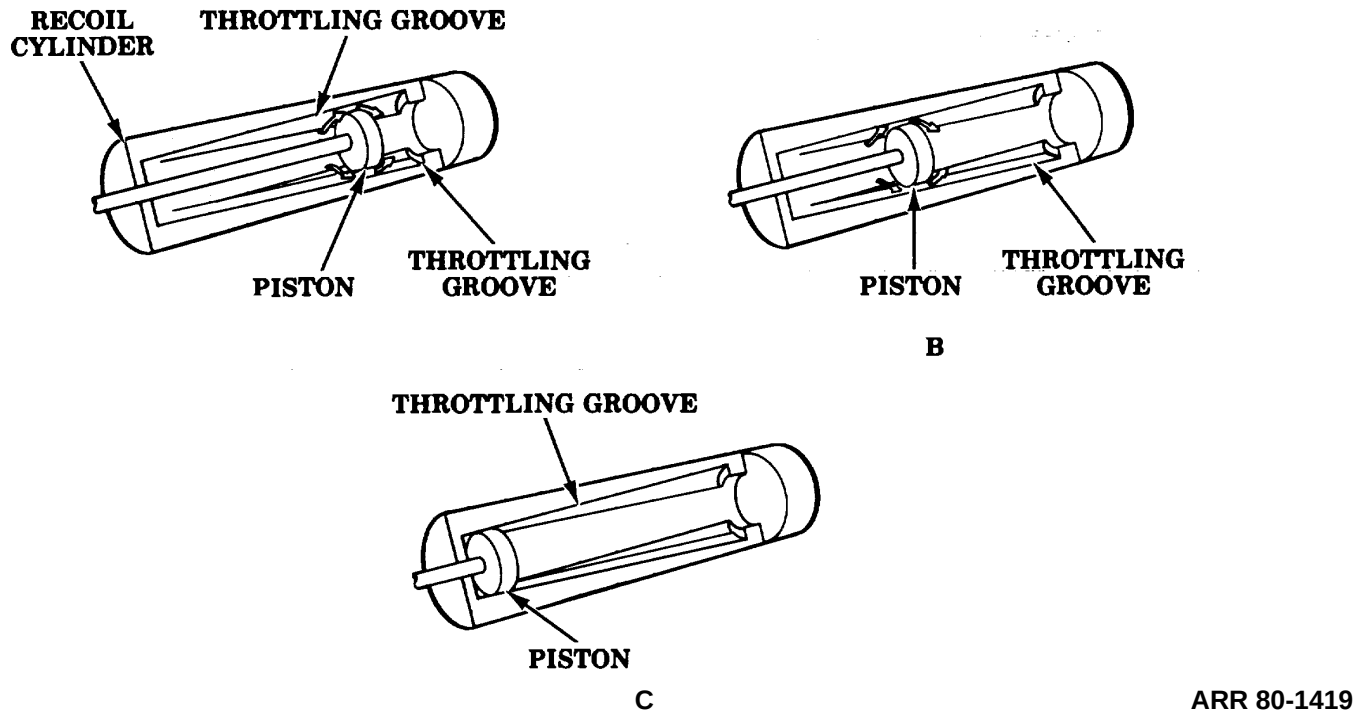

Figure 6-2. Throttling grooves.

(2) Throttling rod. A tapered throttling rod is attached to the recoil cylinder (fig 6-3). The piston rod is hollow to receive the throttling rod during recoil. Ports in the piston allow oil to flow. At the start of recoil (view A) the smallest section of the throttling rod is in the throttling orifice; the oil flows freely, allowing the cannon to recoil. As the cannon continues to recoil, the opening in the piston through which the oil flows is decreased until the throttling rod nearly seals the throttling orifice at the end of recoil (view B), making the flow of oil difficult. As the oil can be compressed only slightly, the cannon is brought to rest. The throttling rod is used on the M114A1 howitzer.

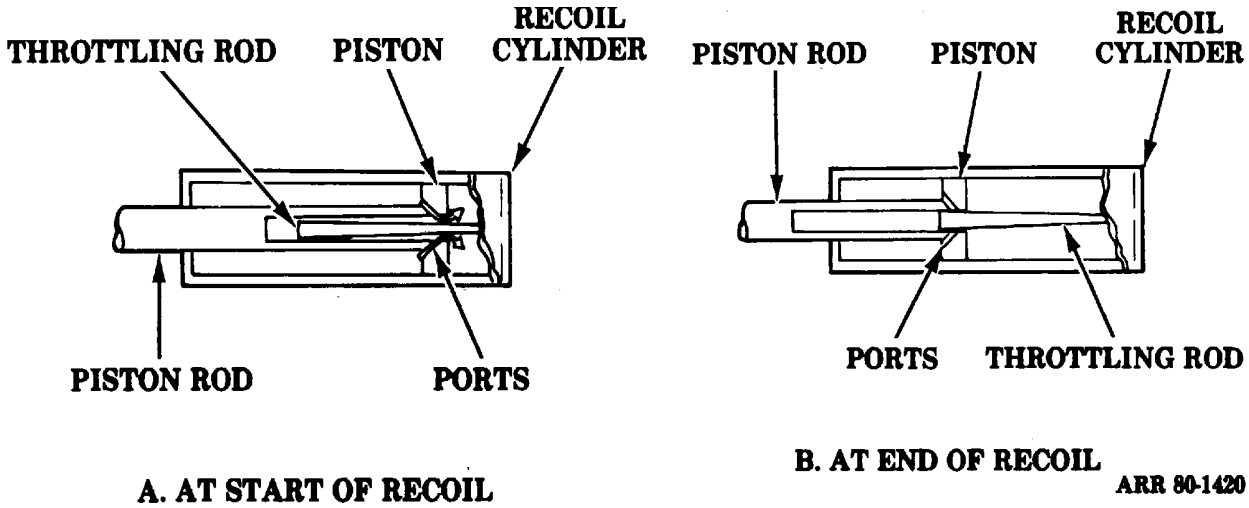

Figure 6-3. Throttling rod

(3) Variable recoil throttling rod and throttling grooves. Most current field artillery weapons have **a** variable recoil mechanism. This permits long recoil at low angles of elevation for stability and short recoil at high elevation to prevent the cannon from hitting the ground or some part of the weapon (fig 6-4). The recoil brake consists of a throttling rod and throttling grooves (fig 6-5). A hollow piston rod (throttling rod) slides on a control rod with throttling grooves in it. The rotation of the control rod is controlled through gears and cams by the angle of elevation Maximum recoil results when the throttling grooves aline with ports in the piston, allowing the maximum flow of oil. To reduce the length of recoil, the control rod is rotated and moves the throttling grooves out of line with the ports This reduces the size of the openings through which the oil can flow, resulting in shorter recoil.

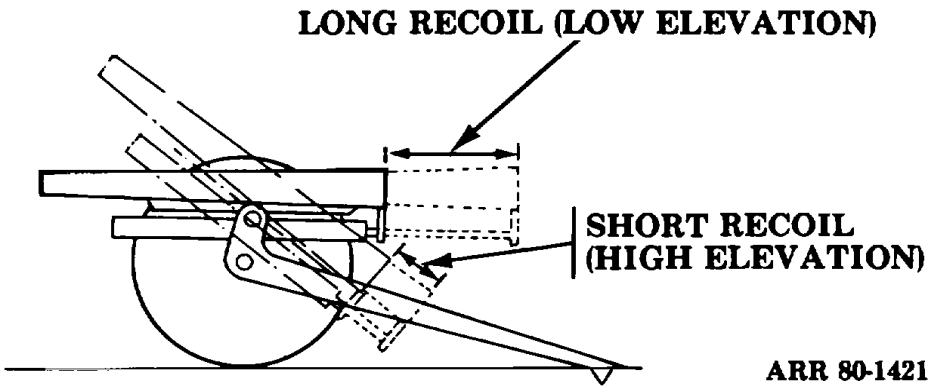

Figure 6-4. Variable recoil.

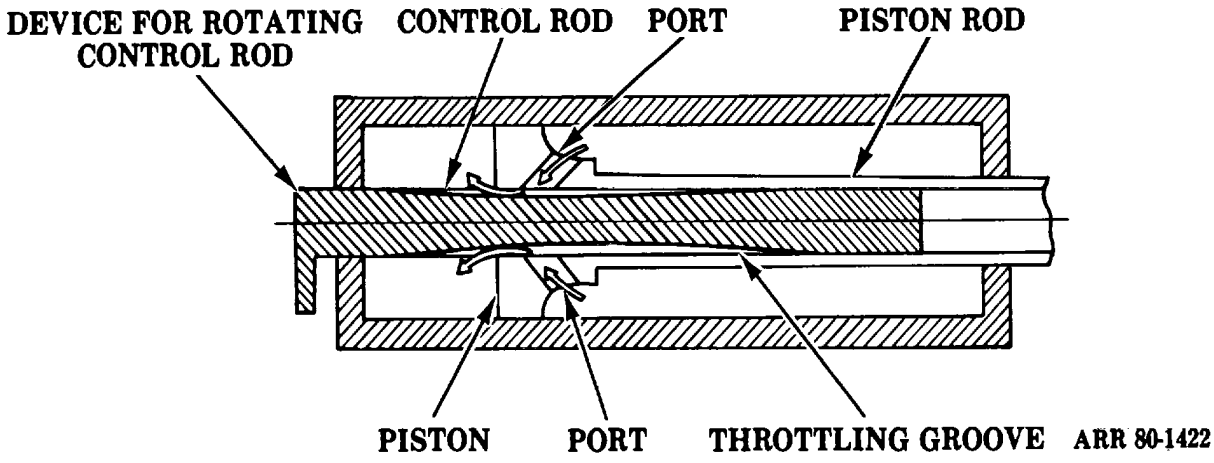

Figure 6-5. Variable recoil throttling rod and throttling grooves.

6-5. Counterrecoil Mechanism. The counterrecoil mechanism returns the cannon from the recoil position to the firing position and holds it there until the weapon is fired again. There are three kinds of hydropneumatic counterrecoil mechanisms in use on current field artillery weapons.

a. The dependent counterrecoil mechanism, in which the recoil and counterrecoil systems are connected by an oil passage, is found on all light field artillery weapons. The floating piston countercoil mechanism uses the force of compressed gas (usually nitrogen) to return the cannon to the in battery position (view A, fig 6-6). The floating piston forms a tight seal between the oil at one end of the recuperator (counterrecoil) cylinder and the gas at the other end.

(1) As the cannon recoils, carrying the recoil piston with it, the oil is forced through the port in the recuperator cylinder (view B). This forces the floating piston forward, further compressing the gas, which helps to check recoil.

(2) At the end of recoil, the increased gas pressure forces the floating piston back to the rear, driving the oil back through the port and against the recoil piston. This pushes the piston and cannon back into battery. The initial gas pressure is made great enough to hold the cannon in battery until the weapon is fired again.

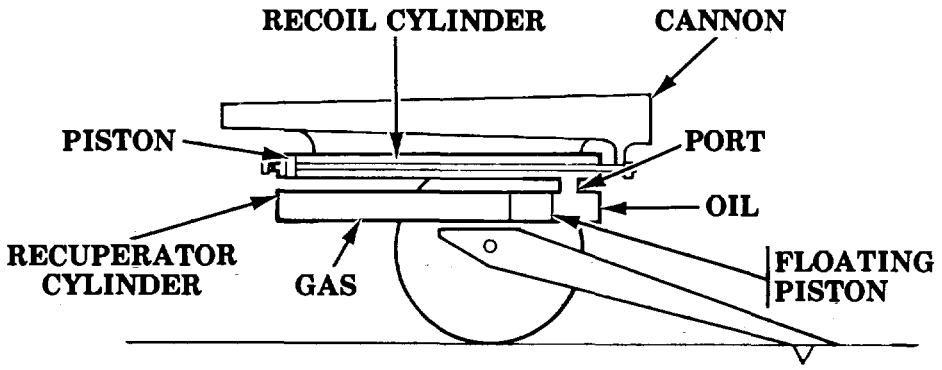

A. FIRING POSITION (IN BATTERY)

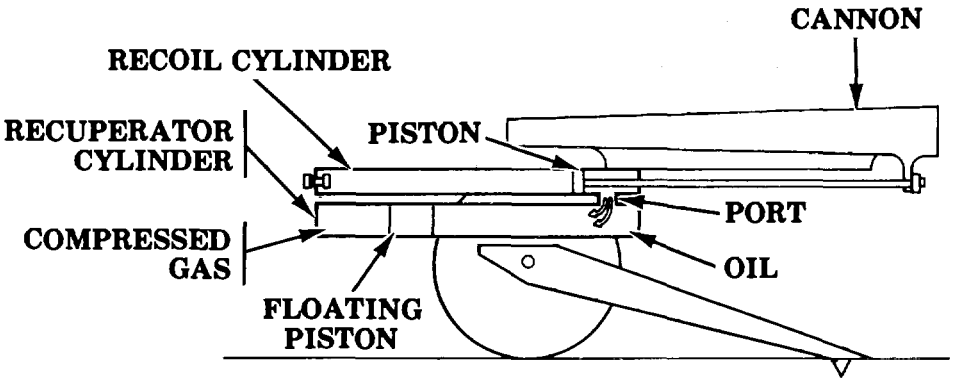

B. AT END OF RECOIL ARR 80-1423

Figure 6-6. Dependent counterrecoil mechanism.

b. The independent counterrecoil mechanism (fig 6-7), in which the recoil and counterrecoil systems are not connected by an oil passage, is used on all medium and heavy field artillery weapons, except the M109/M109A1 howitzer. This counterrecoil mechanism consists of a recoil cylinder, a counterrecoil cylinder, and a recuperator.

(1) Recoil cylinder. The recoil cylinder houses the piston which has two openings to permit the free flow of recoil oil. The piston is mounted to the piston rod which extends through the recoil cylinder and is attached to the breech ring. When the weapon is fired, the piston and piston rod move rearward with the tube during recoil.

(2) Counterrecoil cylinder. The counterrecoil cylinder contains a piston rod and a piston. The piston rod is connected to the breech ring and moves rearward with the tube during recoil. When the piston is pulled rearward, it forces the recoil oil toward the rear of the counterrecoil cylinder, through the oil passage, and into the recuperator. During counterrecoil, the oil is returned to the counterrecoil cylinder under great pressure. This forces the piston forward, returning the cannon to the in battery position.

(3) Recuperator. The recuperator contains a floating piston, recoil oil, and nitrogen gas. The floating piston provides a movable, oil tight and gas light seal. During recoil, oil is forced from the counterrecoil cylinder into the recuperator. The flow of oil under pressure moves the floating piston forward and compresses the nitrogen gas. The flow of oil stops when the cannon has fully recoiled. The energy, stored in the highly compressed nitrogen gas, forces the floating piston back to its in battery position. The oil in the recuperator is then forced back into the counterrecoil cylinder.

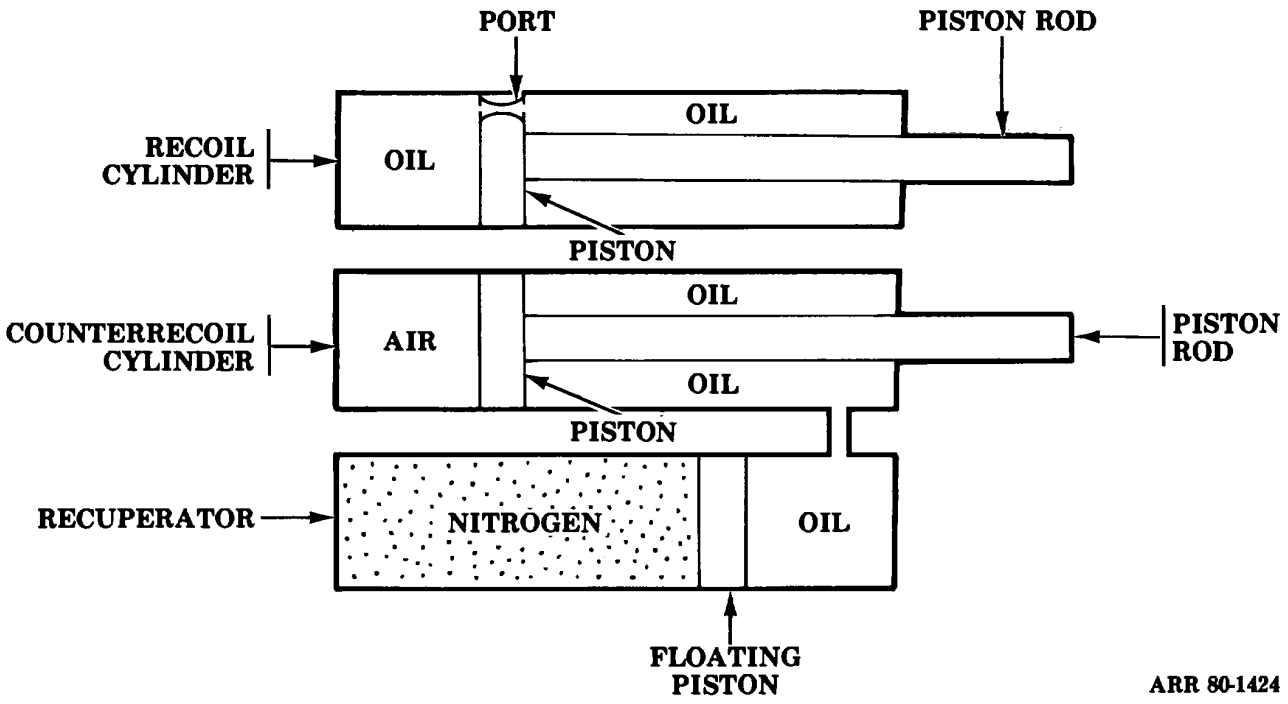

Figure 6-7. Independent counterrecoil mechanism.

c. Another counterrecoil mechanism (fig 6-8), used on the M109f M109A1 howitzer, has a recuperator with a piston attached to a piston rod. The recuperator is filled with nitrogen gas. As the cannon recoils, carrying the piston rod with it, the recuperator piston compresses the nitrogen gas. At the end of recoil this increased gas pressure forces the piston forward, moving the cannon to the in battery position.

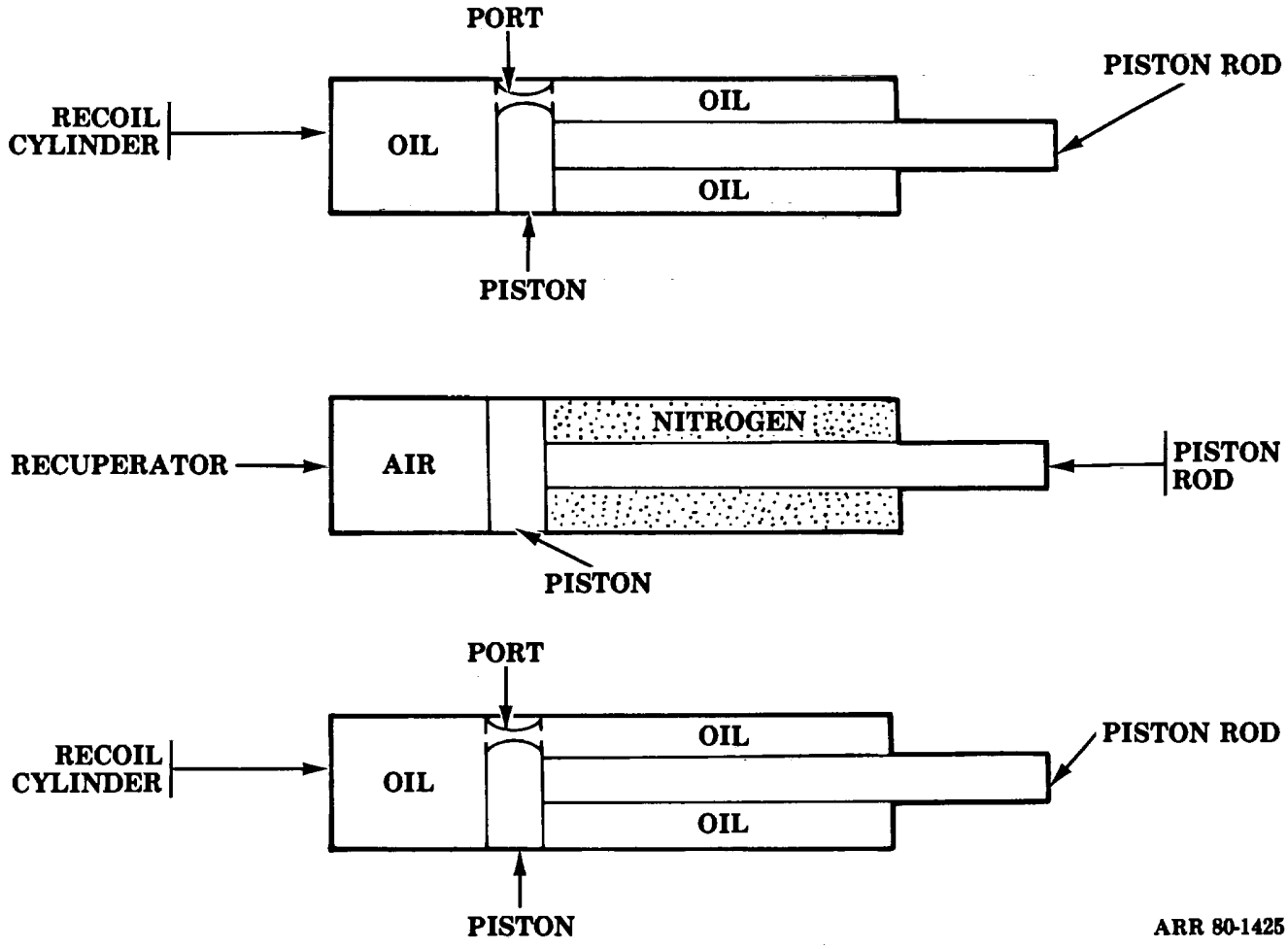

Figure 6-8. Piston-type hydropneumatic recuerator.

6-6 Counterrecoil Buffer. The counterrecoil buffer is that part of the counterrecoil system which controls the final movement of the cannon as it completes counterrecoil. The buffer prevents shock as the cannon returns to the in battery position. The three types of counterrecoil buffers are the dash pot, the hydraulic spring, and the respirator or Schindler.

a. Dash Pot Counterrecoil Buffer. The dash pot counterrecoil buffer, used on the M114/ M114A1 howitzer, consists of a tapered buffer rod which slides in and out of a cylindrical cavity or dash pot. The recoil cylinder is attached to and recoils with the cannon; the piston rod is attached to the carriage and does not move.

(1) As the cannon recoils (view A, fig 6-9), the buffer rod is withdrawn from the dash pot which then fills with oil.

(2) During the latter part of counterrecoil (view B), the oil-filled dash pot rides over the buffer rod. The oil from inside the dash pot can only flow through the narrow clearance between the buffer rod and dash pot. As the dash pot moves further down the buffer rod, the opening for the oil flow becomes smaller. The motion of the piston rod and dash pot meets with greater resistance in the last few inches of counterrecoil. The cannon is then eased in the in battery position without jarring the carriage.

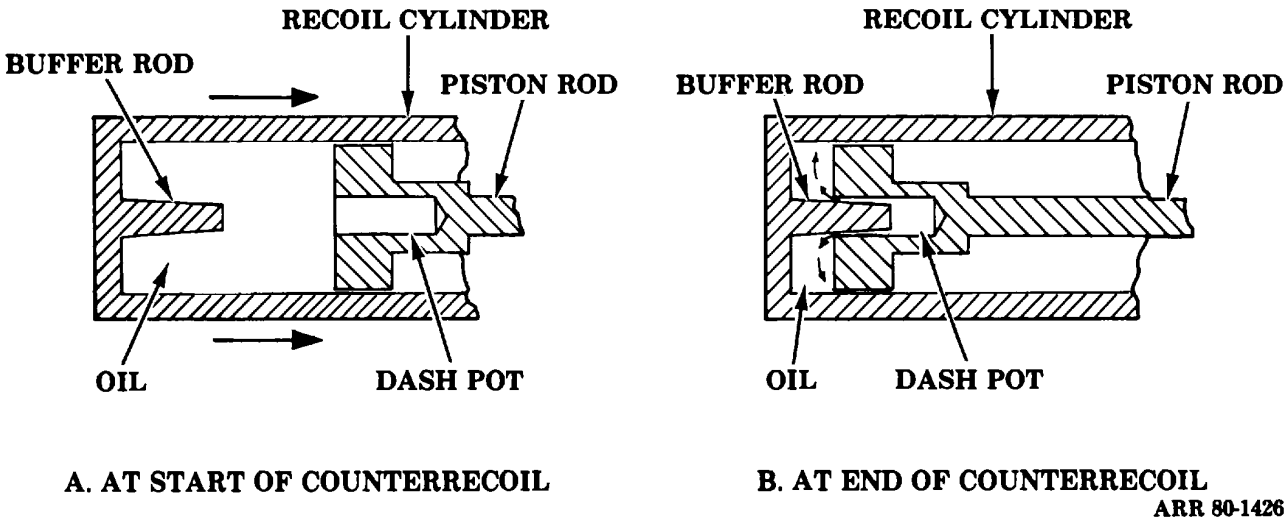

Figure 6-9. Dash pot counterrecoil buffer.

b. Hydraulic Spring Counterrecoil Buffer. Used on the M109/M109A1 howitzer, the hydraulic spring counterrecoil buffer is an oil-filled cylinder containing a spring and piston. When the cannon is in the in battery position (view A, fig 6-10), the buffer spring is held compressed by the cannon.

(1) During recoil (view B), the cannon moves away from the piston rod, and the buffer spring moves the piston and piston rod in the direction of recoil. This action forces the oil to flow freely through the ports in the piston and the grooves in the cylinder.

(2) Near the end of counterrecoil, the cannon contacts the piston rod. As the piston is forced in the direction of counterrecoil, against the action of the buffer spring (view C), a disk-shaped valve closes the ports in the piston. As the piston continues moving forward, the oil is forced through the varying depth grooves. The oil flow is restricted by the grooves and slows the cannon to bring it to a gradual stop.

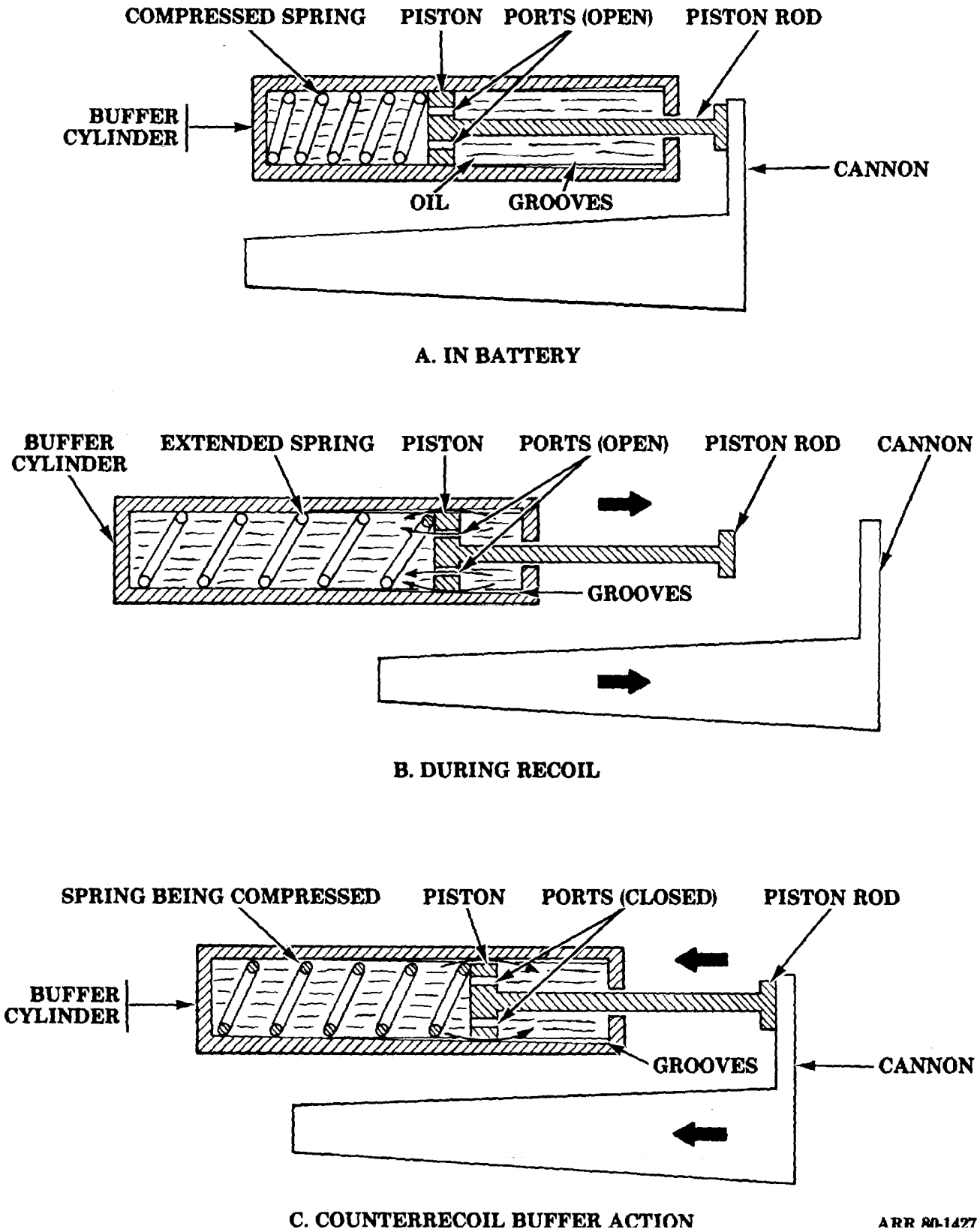

Figure 6-10. Hydraulic spring counterecoil buffer.

c. Respirator or Schindler Counterrecoil Buffer. Although the respirator is not a true counterrecoil buffer, it assists buffer action. The respirator is used with the hydropneumatic recoil system on the M101/M1OlA1 howitzer. The respirator is screwed into the closed end of the recoil cylinder and contains a one-way air valve which only opens to pressure from the outside.

(1) During recoil (view A, fig 6-11), the rear-ward movement of the piston causes air to be drawn into the respirator through a hole. The valve opens due to the inward flow of air, allowing the air to enter the recoil cylinder through a relatively large opening.

(2) During counterrecoil (view B), the internal air pressure and the spring close the valve. The air compressed by the returning piston can escape only through a small hole. This resistance to the escape of air produces a buffer action.

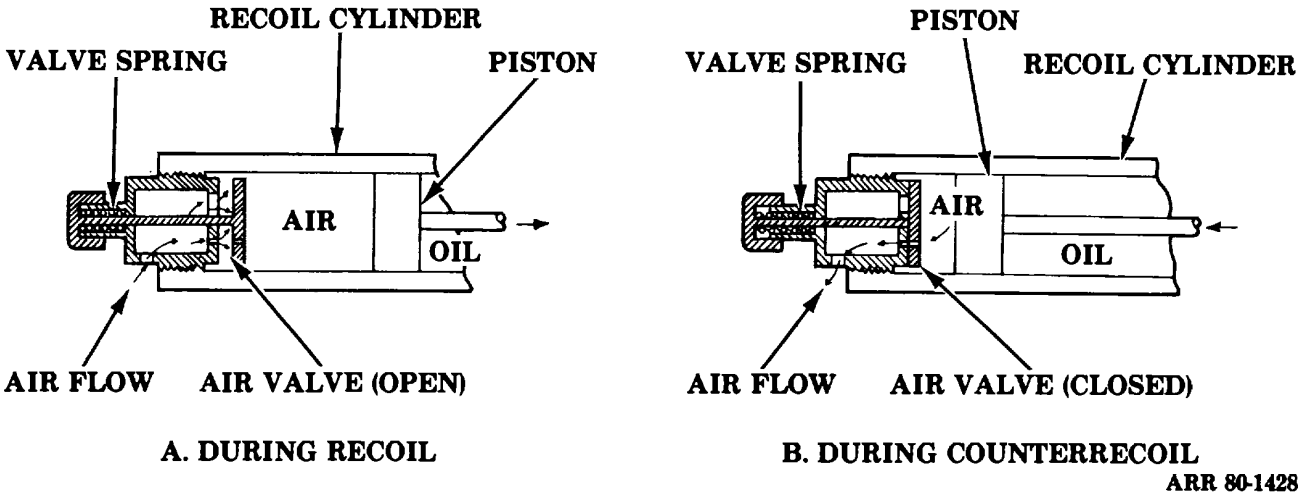

Figure 6-11. Respirator or Schindler counterrecoil buffer.

6-7. Replenisher. A replenisher is used with independent recoil mechanisms to allow the oil in the recoil system to expand and contract. It also compensates for the loss of small amounts of oil due to leakage from oil seals. The replenisher consists of a recoil oil reservoir which is connected to the recoil cylinder. There are two kinds of replenishers. The spring-type replenisher is used on all medium and heavy field artillery weapons, except the M109/ M109A1 howitzer. The nitrogen gas-type replenisher is used on the M109/M109A1 howitzer.

a. Spring-Type Replenisher. The spring-type replenisher (fig 6-12) contains a spring-loaded piston which exerts pressure against the oil in the replenisher in order to maintain the volume of oil in the recoil cylinder.

(1) The recoil oil can expand due to an increase in temperature. As the oil expands, the replenisher piston is forced rearward, increasing the load on the spring. This increases the oil pressure in the replenisher and relieves the pressure in the recoil cylinder.

(2) The recoil oil can contract due to the end of firing, a drop in temperature, or a failure of the recoil mechanism seals. The force of the spring causes the replenisher piston to move slowly forward, forcing oil into the recoil cylinder to compensate for the loss.

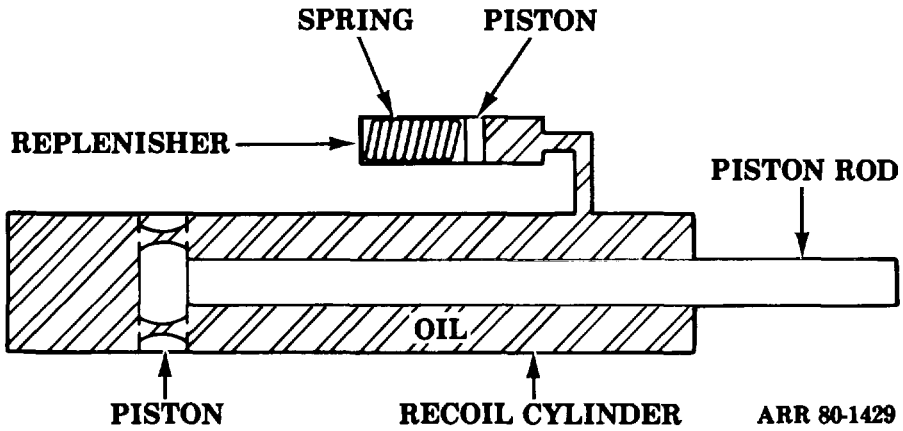

Figure 6-12. Spring type replenisher.

b. Nitrogen Gas-Type Replenisher. The nitrogen gas-type replenisher (fig 6-13) contains a nitrogen gas-filled bladder which exerts pressure against the oil in the replenisher to maintain the volume of oil in the recoil cylinders and the counterrecoil buffer.

(1) When the recoil oil in the recoil cylinders and counterrecoil buffer expands, it is forced into the replenisher, where it compresses the nitrogen gas-filled bladder.

(2) When the recoil oil contracts, the nitrogen gas-filled bladder continues to exert pressure on the oil throughout the system.

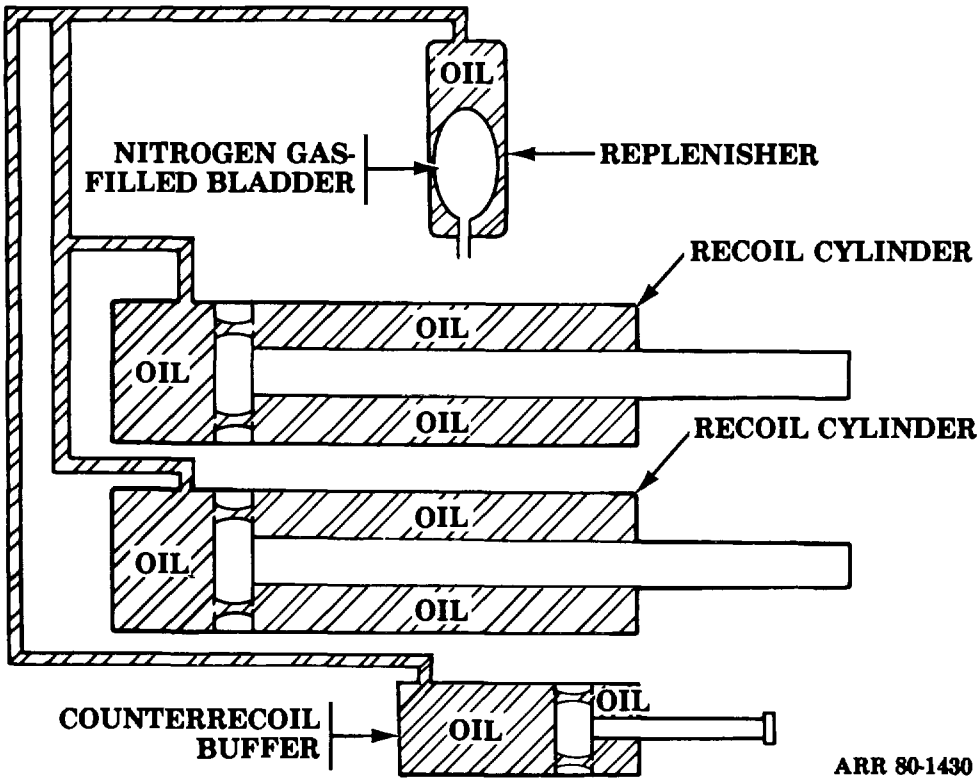

Figure 6-13. Nitrogen gas-type replenisher.

CHAPTER 7

CARRIAGE AND MOUNT

Section I. GENERAL

7-1. Definition. A carriage or mount is a combination of assemblies that support a weapon in the firing and traveling positions.

a. Carriages. Carriages are used on all current towed artillery weapons. The carriage consists of a combination of several or all of the following major components:

(1) Recoil mechanism (p 6-1).

(2) Cannon support components.

(a) Bottom carriage.

(b) Top carriage.

(c) Cradle.

(d) Sleigh.

(3) Equilibrator.

(4) Elevating mechanism.

(5) Traversing mechanism.

(6) Axle.

(7) Equalizer.

(8) Firing support and retractable suspension system.

(9) Trail.

(10) Shields.

(11) Brakes.

b. Mounts. Mounts are used on all current self propelled artillery weapons. Mounts are designed with the recoil mechanism as an integral part of the mount. Besides the recoil mechanism, the mount may consist of a combination of several or all of the following major components:

(1) Cannon support components.

(a) Cradle.

(b) Sleigh.

(2) Equilibrator.

(3) Elevating mechanism.

(4) Traversing mechanism

Section II. CANNON SUPPORT COMPONENTS

7-2. General. The main cannon support components are the bottom carriage (fig 7-1), top carriage, cradle, and sleigh. Depending on design, some of these components may or may not be present.

7-3. Bottom Carriage. The bottom carriage (fig 7-1) supports the top carriage and has portions of the traversing mechanism attached to it. The pintle, a vertical pin about which the top carriage rotates, may be fastened to the top carriage to fit into a socket in the bottom carriage, or it may be fastened to the bottom carriage to fit into a socket in the top carriage.

7-4. Top Carriage. The top carriage (fig 7-1) supports the cradle in the trunnion bearings and usually carries the elevating mechanism. It moves with the cradle in traverse (horizontal rotation) but not in elevation. When the weapon is traversed, the top carriage rotates horizontally on the axle or bottom carriage. A top carriage is required for pintle traverse. When a top carriage is not used, its function is performed by the upper front part of the trail.

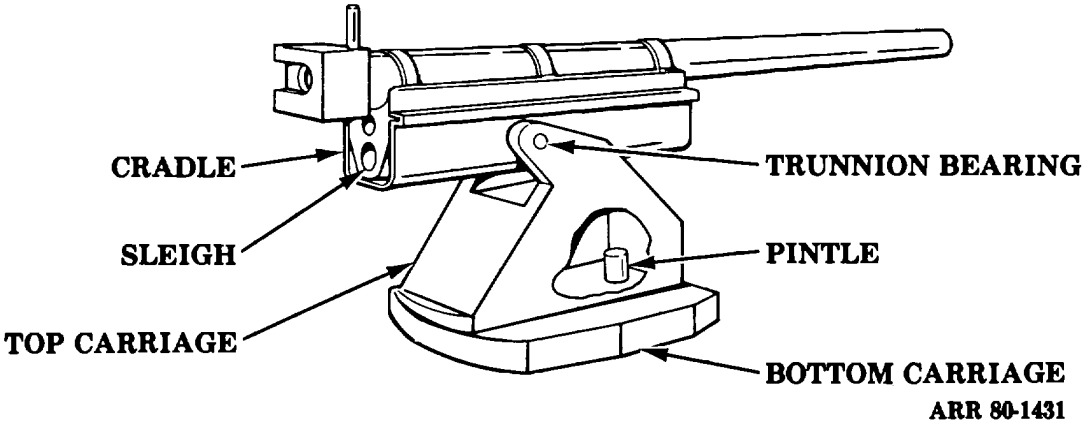

Figure 7-1. Top and bottom carriages

7-5. Cradle. The cradle (fig 7-2) supports the cannon and sleigh. The cradle can be a U-shaped trough with slides or rails on paths or guideways, along which the cannon recoils and counterrecoils. The cradle may also fit entirely around the tube, permitting the cannon to recoil directly into it. With such a design, the tube may have an outside machined bearing surface. When a sleigh is used, the cradle provides a means of securing the recoil piston rod(s). When a sleigh is not used, the recoil mechanism can be housed in the cradle, or the recoil cylinders can be mounted to the cradle. The cradle has trunnions which furnish an axis about which the cradle and cannon rotate elevation. The trunnions rest in trunnion bearings on the top carriage.

7-6. Sleigh. The sleigh (fig 7-2) forms the immediate support of the cannon. In many weapons, the sleigh houses the recoil mechanism and recoils with the cannon on the cradle. The recoil cylinders may be bored directly into the sleigh or, if the cylinders are separate tubes, they are rigidly attached to the sleigh. The cannon is firmly secured to the sleigh which, in turn, slides on the cradle in recoil and counterrecoil.

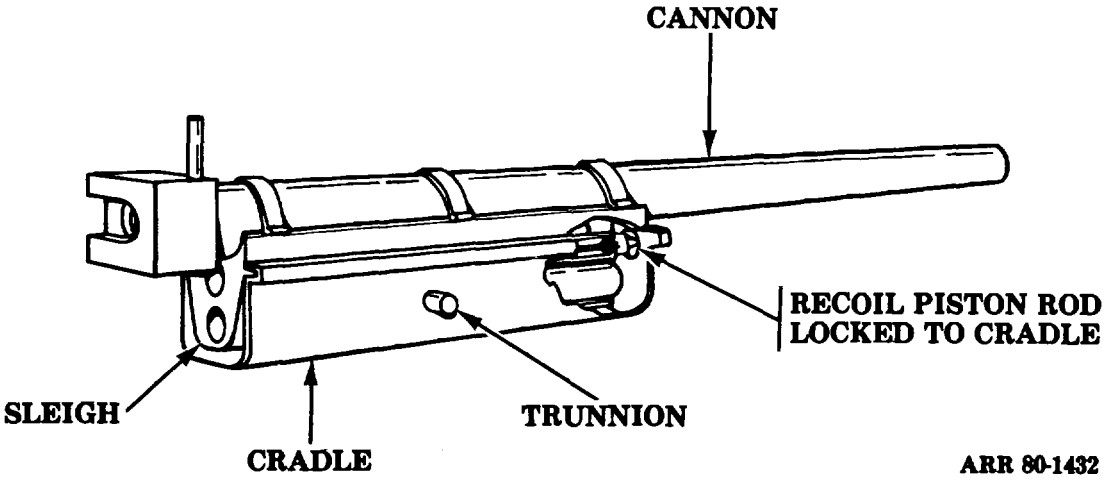

Figure 7-2. Cradle and sleigh.

Section III. EQUILIBRATOR

7-7. General. To permit higher elevation in artillery weapons, the horizontal axis, about which the cannon rotates for elevation, is located well to the rear of the center of gravity of the cannon. The cannon is therefore unbalanced and tends to tip forward. The forces that tip the cannon are such that a greater force is required to balance the cannon at low elevations than at high elevations. Using springs or compressed gas, the equilibrator keeps the cannon in balance at all angles of elevation so that the cannon can be elevated and depressed by hand. The three types of equilibrators are spring, pneumatic, and hydropneumatic. An equilibrator balances the cannon in one of the following ways:

a. Pulling.

(1) The pull-type equilibrator pulls down on the breech end of the cradle.

(2) The carriage-mounted pull-type equilibrator pulls up on the forward end of the cradle. b. Pushing. The pusher-type equilibrator pushes up on the forward end of the cradle, or down on the breech end of the cradle.

7-8. Spring Equilibrators.

a. Pull-Type Spring Equilibrator (Fig 7-3). When the cannon is in a horizontal or low angle of elevation, the equilibrator spring is compressed by the piston attached to the cradle, thereby exerting a force opposite to that of the muzzle end of the cannon. As the cannon is elevated, the spring is extended and exerts less force, since less force is required to hold the cannon in balance at higher elevations. The pull-type equilibrator is used on the MlOIA1 howitzer.

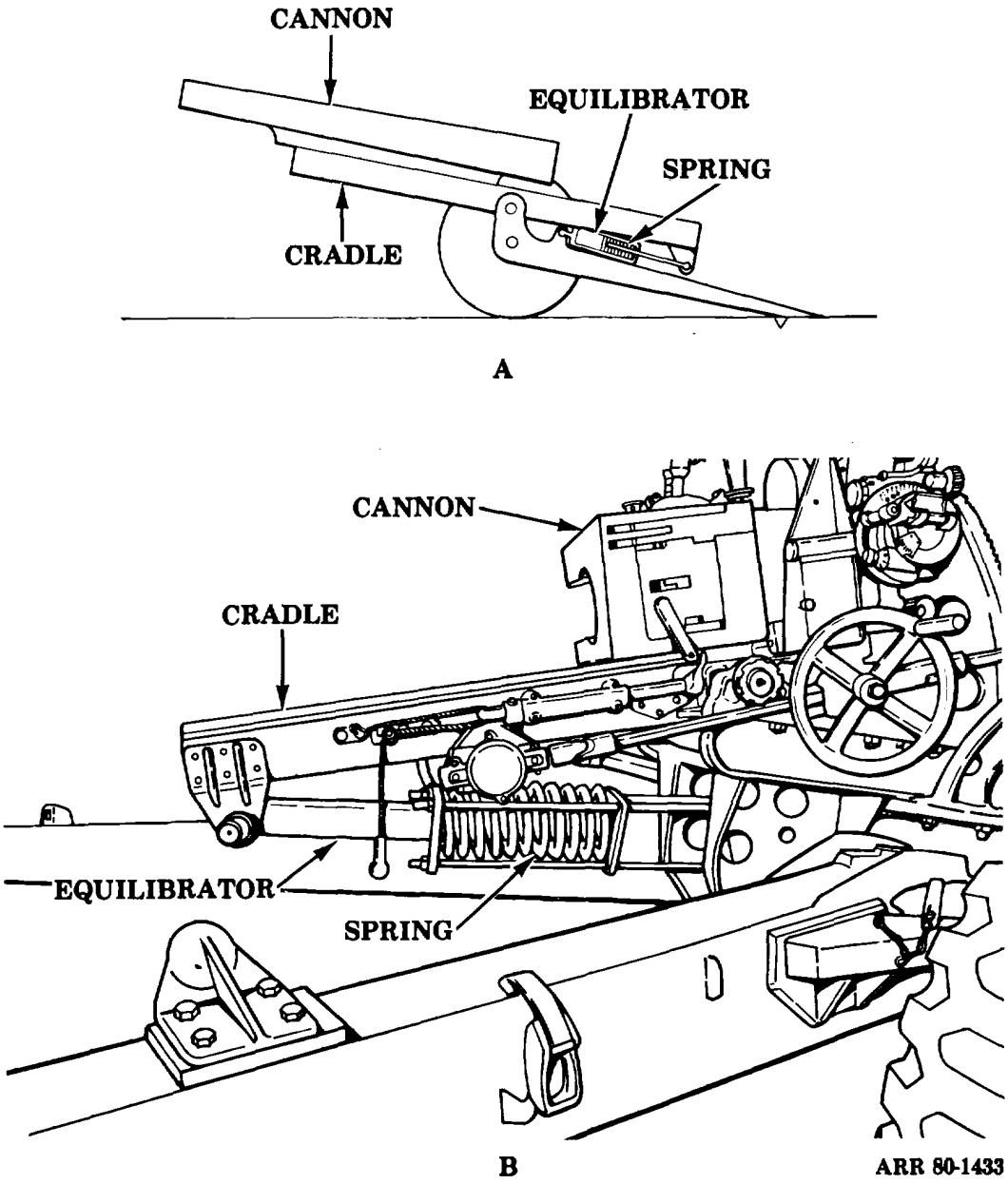

Figure 7-3. Pull-type spring equilibrator.

b. Carriage-Mounted Pull-Type Spring Equilibrator (Fig 7-4). This equilibrator is mounted on the top of the carriage. When the cannon is at a low elevation, the springs are compressed and exert a pulling force on the forward end of the cradle. This equilibrator is used on the M114A1 howitzer.

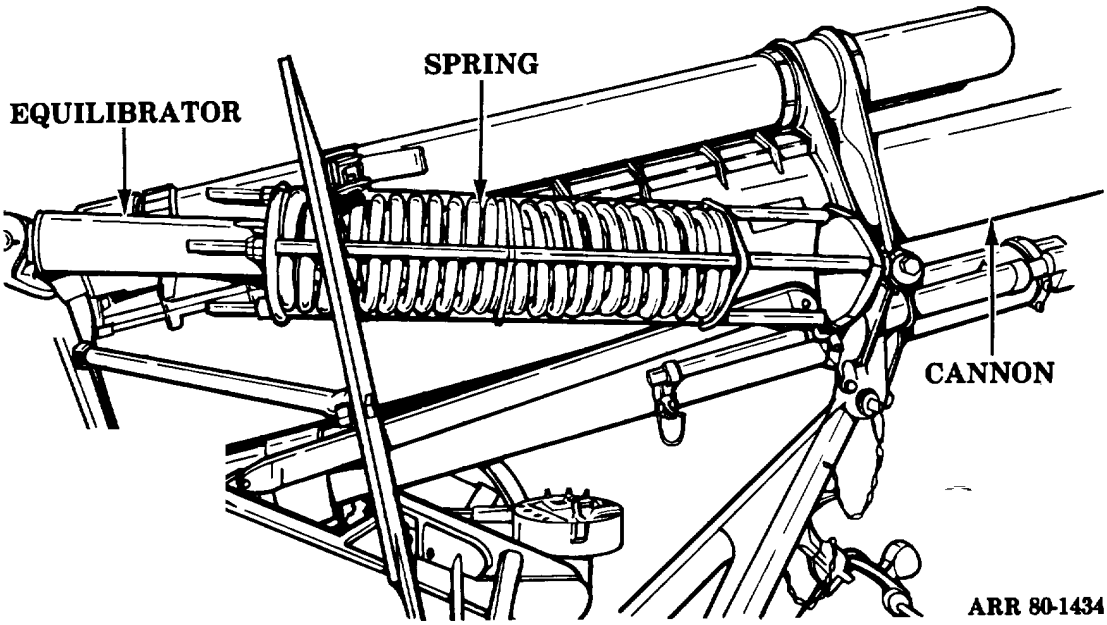

Figure 7-4. Carriage-mounted pull-type spring equilibrator.

c. Pusher-Type Spring Equilibrator (Fig 7-5). This equilibrator has two telescoping sleeves that form a housing for the spring. When the cannon is in the horizontal position, the telescoping sleeves are pushed together by the weight of the cannon, compressing the spring. The spring force pushes up against the forward end of the cradle or down on the breech end of the cradle and balances the cannon. As the cannon is elevated, the spring expands, reducing the balancing force. This force is enough to balance the cannon. This equilibrator is used on the M102 howitzer and the M198 howitzer.

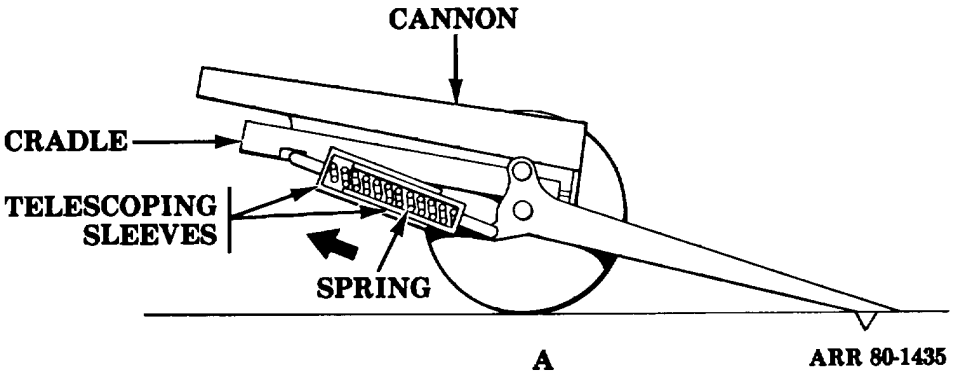

Figure 7-5. Pusher-type spring equilibrator (1 of 2)

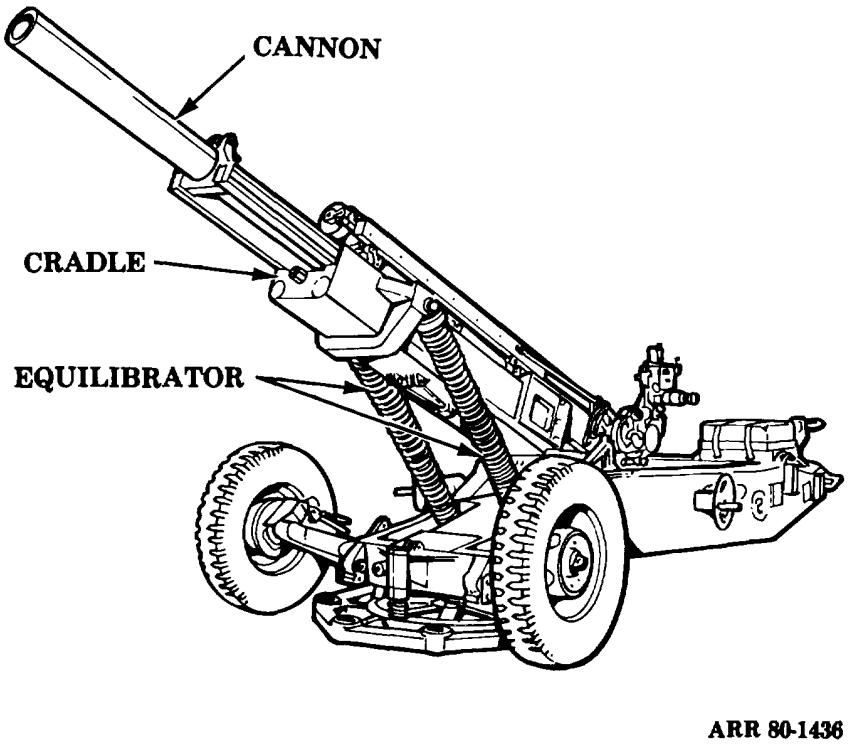

Figure 7-5. Pusher-type spring equilibrator (2 of 2).

7-9. Pneumatic Equilibrator.

a. Description. The pneumatic equilibrator (fig 7-6), used on the M110Ml10A1 howitzer and the M107 gun, operates similarly to a spring equilibrator, with the following differences:

(1) Compressed gas is used instead of a spring.

(2) Packing glands must be added to prevent the escape of gas.

(3) The equilibrator must be charged with compressed gas.

b. Operation. When the cannon is depressed, the cylinders move apart, decreasing the volume of gas. This increases the gas pressure, which produces a greater lifting force on the cannon. As the cannon is elevated, the cylinders are telescoped, increasing the gas volume. This decreases the gas pressure, producing a smaller lifting force on the cannon.

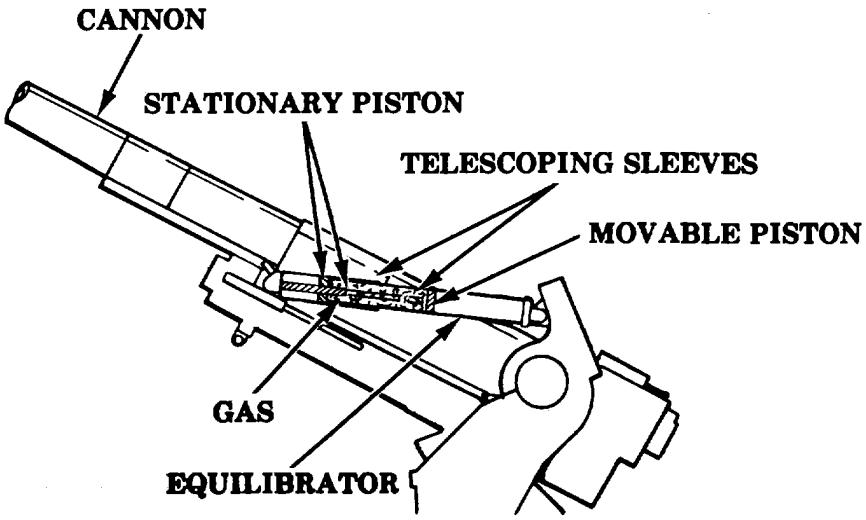

A

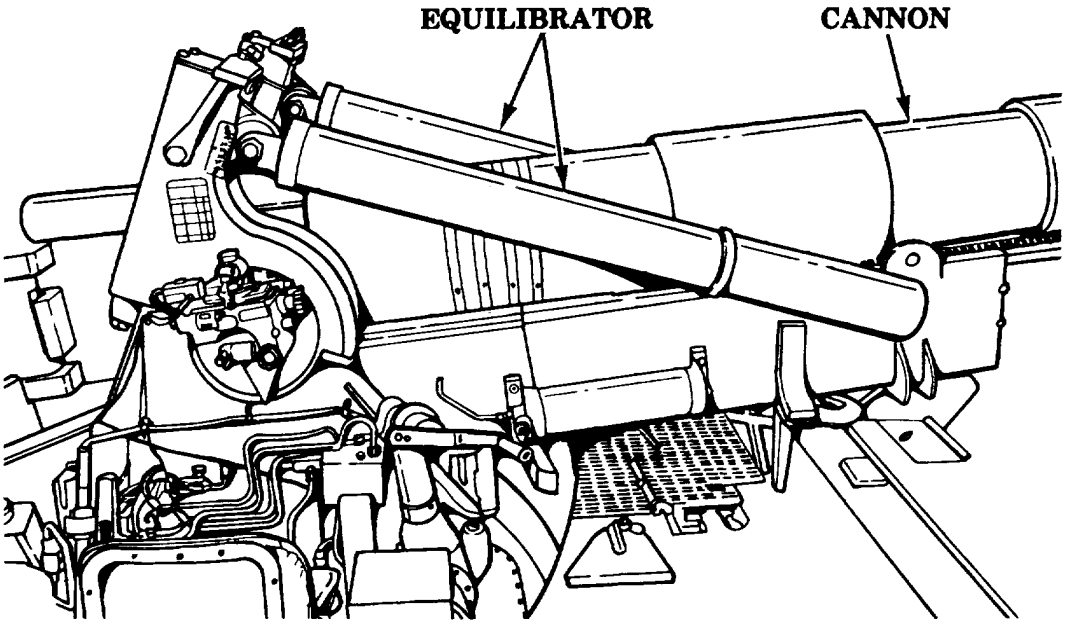

B

ARR 80-1437

Figure 7-6. Pneumatic equilibrator.

7-10. Hydropneumatic Equilibrator.

a. Components. The hydropneumatic equilibrator (fig 7-7), used on the M109/M109A1 howitzer, uses compressed gas (nitrogen) and hydraulic oil to balance the cannon at all angles of elevation. It consists of an equilibrated elevating cylinder, a reservoir, an accumulator, and a hand pump.

(1) Equilibrated elevating cylinder. The equilibrated elevating cylinder is a long cylinder divided at the center into two separate chambers (view A). A piston rod passes through the front chamber into the rear chamber. A piston is attached to the piston rod in each chamber. The rear of the cylinder is attached to the cab roof (view B). The piston rod at the front of the cylinder is attached to the cannon.

(2) Reservoir (view C). The reservoir contains hydraulic oil for the equilibrator system. It is connected to the hand pump and the accumulator by hydraulic lines.

(3) **Accumulator** (view C). Nitrogen gas and hydraulic oil are separated in the accumulator by a floating piston. The accumulator is connected to the equilibrated elevating cylinder by a hydraulic line.

(4) Hand pump (view C). The hand pump is used to pump oil from the reservoir into the accumulator.

b. Operation. When the hand pump is operated, hydraulic oil in the reservoir is pumped into the accumulator, exerting pressure against the floating piston and forcing it to move. As the floating piston moves, it further compresses the nitrogen gas, which then exerts a greater pressure on the oil through the floating piston. A hydraulic line, connecting the accumulator with the equilibrator cylinder, carries the pressurized oil to the equilibrated elevating cylinder, where pressure is exerted against the equilibrator piston. To balance the cannon, oil is pumped into the equilibrated elevating cylinder until the pressure against the equilibrator piston equals the unbalanced weight of the cannon. As the cannon is elevated, the unbalanced weight decreases and the equilibrator piston moves to the rear, reducing the oil pressure. This keeps the cannon balanced at all elevations.

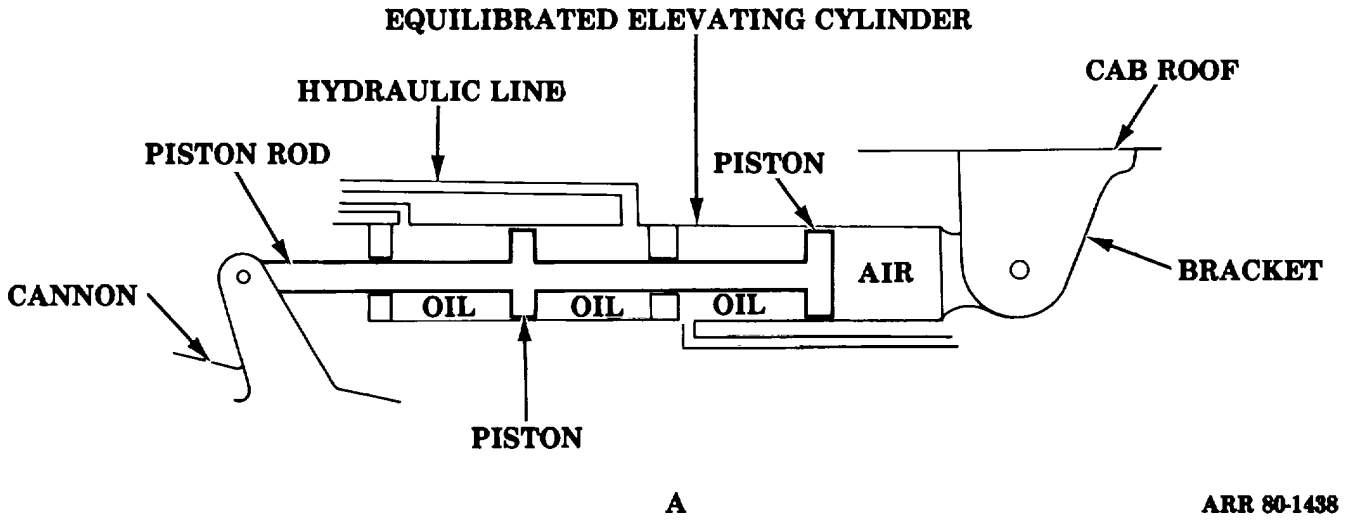

Figure 7-7. Hydropneumatic equilibrator (1 of 2).

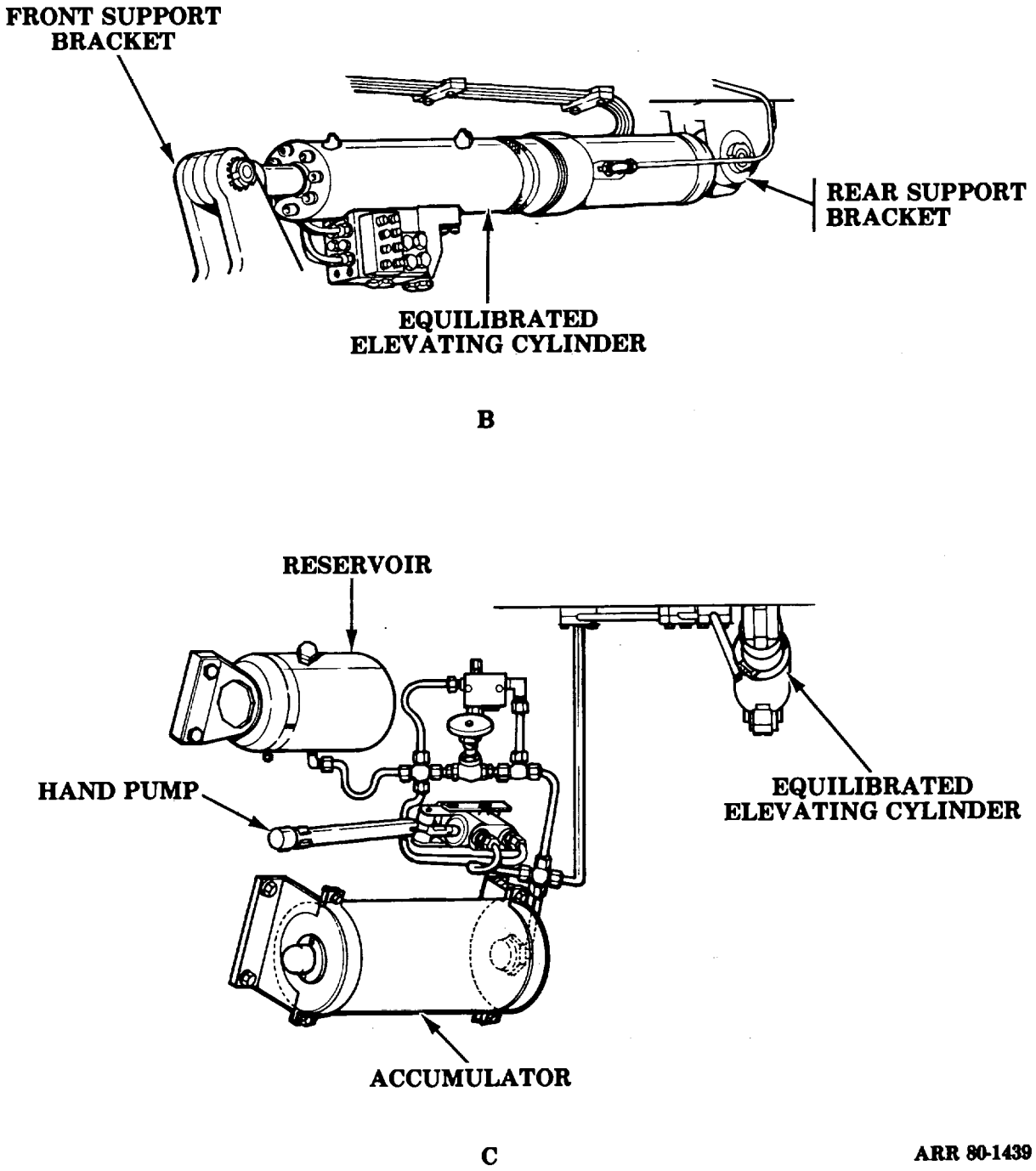

Figure 7-7. Hydropneumatic equilibrator (2 of 2).

Section IV. ELEVATING MECHANISM

7-11. General. The elevating mechanism elevates or depresses a cannon to a desired angle and firmly holds the cannon at this angle for firing. The elevating mechanism may have manual or power operation.

a. Manual Operation. All towed field artillery weapons are elevated and depressed through a gear train operated by a handwheel. A manual system is also included in self-propelled field artillery weapons in case of a power failure.

b. Power Operation. All self-propelled field artillery weapons are elevated and depressed by hydraulic power. Power operation increases the speed of elevating and depressing the cannon and reduces the manual effort required. Speed in elevating and depressing is essential for a faster rate of fire, especially if the weapon must be positioned for loading and then reset back into the original elevation for firing.

7-12. Manually Operated Elevating Mechanisms. There are two types of manually operated elevating mechanisms used on current field artillery weapons. The elevating rack and pinion type is used on the MlOlAl howitzer and the M114A1 howitzer. The elevating screw type is used on the M198 howitzer and the M102 howitzer.

a. Elevating Rack and Pinion-Type Elevating Mechanism (Fig 7-8). This elevating mechanism consists of a rack (arc or segment) rotated by a small gear or pinion. The rack is attached to the cradle, and the pinion is attached to a fixed part of the top carriage. A worm and worm wheel, placed in the gear train, makes it possible for the mechanism to hold its position at any angle of elevation when the handwheel is released and the weapon fired.

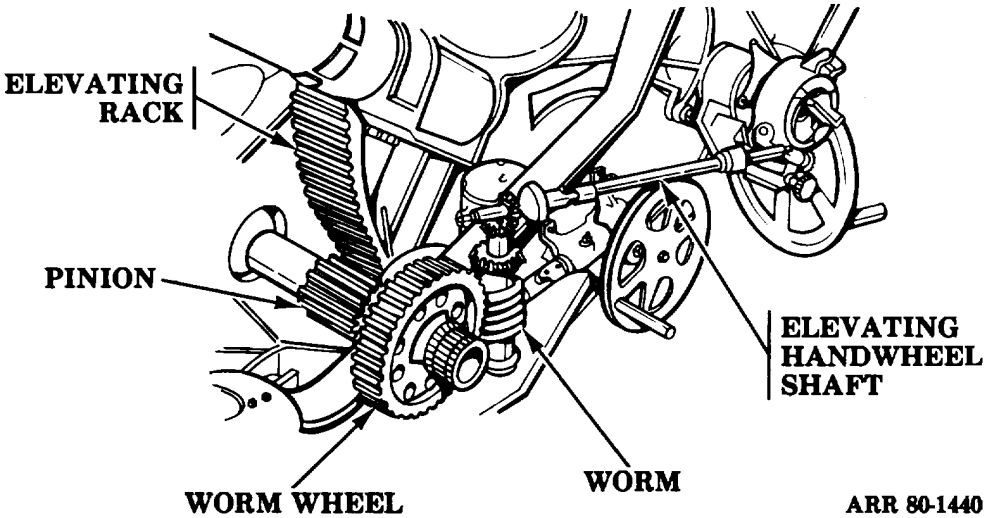

Figure 7-8. Elevating rack and pinion-type elevating mechanism.

b. Elevating Screw-Type Elevating Mechanism. This mechanism consists of elevating screw assemblies (ball screw assemblies) and a gear train used to transmit power from the handwheel assembly to elevate or depress the cannon (view A, fig 7-9). Since the elevating screw assemblies on the M102 howitzer also function as equilibrators, the equilibrator springs are part of the assembly (view B). The lower end of each elevating screw assembly is attached to the carriage, and the upper end is attached to the cradle. When the cannon is elevated or depressed, the elevating screw assemblies are extended or retracted.

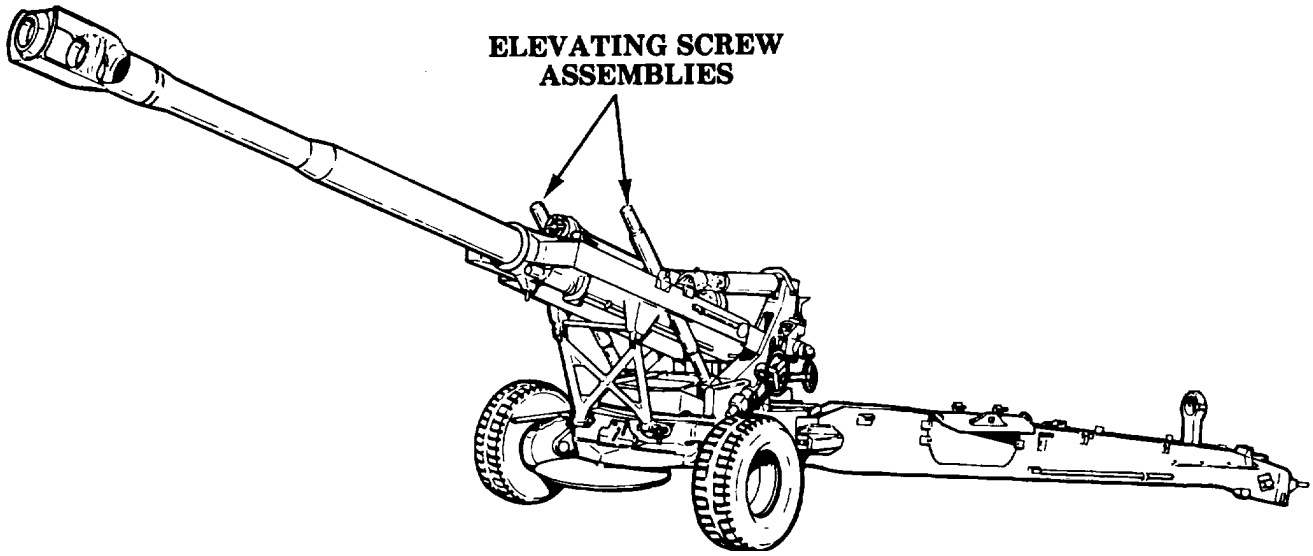

A. ELEVATING SCREW ASSEMBLIES

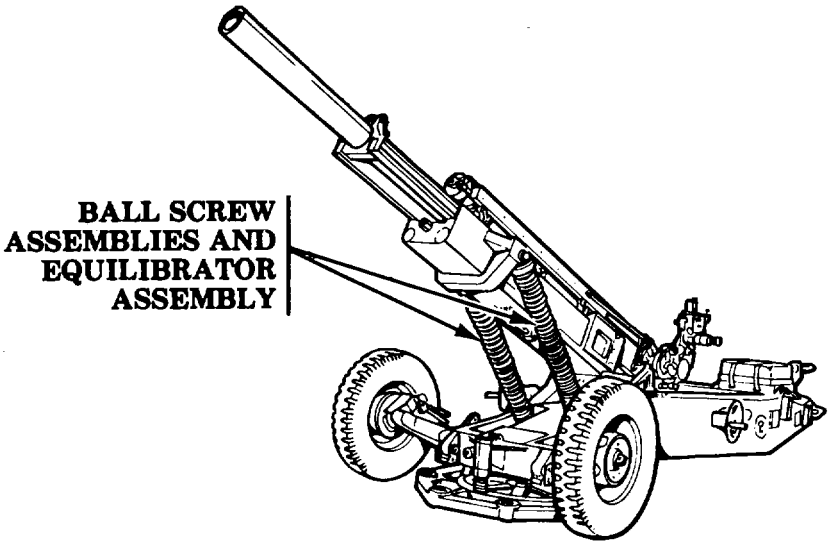

B. BALL SCREW ASSEMBLIES

ARR 80-1441

Figure 7-9. Elevating screw-type elevating mechanism.

7-13. Power Operated Elevating Mechanisms. There are two types of power operated elevating mechanisms on current field artillery weapons. The hydraulic cylinder type is used on the M109/ M109A1 howitzer. The hydraulic motor rack and pinion type is used on the M110/MlOA1 howitzer and the M107 gun.

a. Hydraulic Cylinder-Type Elevating Mechanism (Fig 7-10).

(1) Description. This type of elevating mechanism consists of a hydraulic cylinder which contains a piston and piston rod. The rear end of the cylinder is attached to the weapon cab roof. The piston rod on the front of the cylinder is attached to the mount.
.

Hydraulic power to operate the mechanism is supplied by the vehicle main hydraulic system.

(2) Operation. When the elevation control handle is pulled rearward, the hydraulic control valve is opened, allowing pressurized oil to enter the hydraulic cylinder in front of the piston. The pressure forces the piston rearward, elevating the cannon. When the elevation control handle is pushed forward, the hydraulic control valve is opened, allowing pressurized oil to enter the hydraulic cylinder in the rear of the piston. The pressure forces the piston forward, depressing the cannon. When the elevation control handle is in the upright (neutral) position, all valves are closed, and the cannon is held firmly in place during firing.

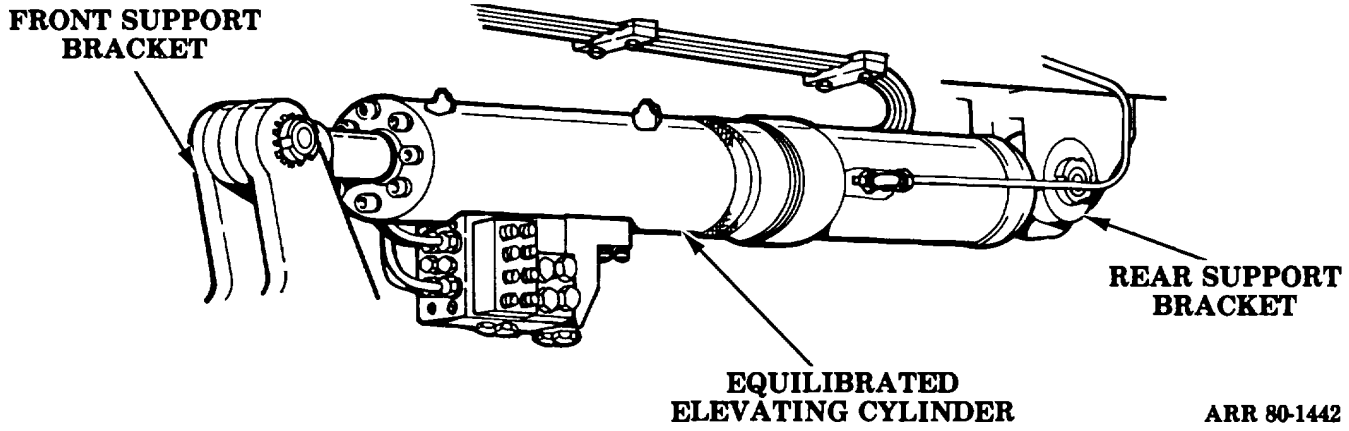

Figure 7-10. Hydraulic cylinder-type elevating mechanism.

b. Hydraulic Motor Rack and Pinion-Type Elevating Mechanism (Fig 7-11).

(1) Description. This type of elevating mechanism consists of a hydraulic motor and gear train, including a rack and pinion gears. The rack is mounted on the underside of the mount. The pinion gears, which engage the rack, are mounted on a shaft, which is driven by a hydraulic motor through the elevation gear housing. Hydraulic power to operate the mechanism is supplied by the vehicle main hydraulic system.

(2) Operation. When the elevation control handle is pulled rearward, the hydraulic control valve is opened, allowing pressurized oil to turn the hydraulic motor in one direction. This turns the gears in the gear train, which elevates the cannon. When the elevation control handle is pushed forward, the hydraulic control valve is opened, allowing pressurized oil to turn the hydraulic motor in the opposite direction. This turns the gears in the gear train, which depresses the cannon. When the elevation control handle is in the upright (neutral) position, all valves are closed, and the cannon is held firmly in position during firing.

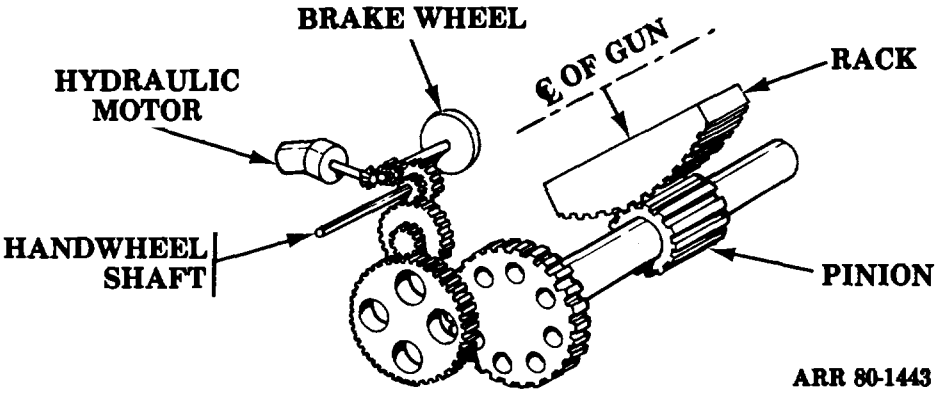

Figure 7-11. Hydraulic motor rack and pinion-type elevating mechanism.

Section V. TRAVERSING MECHANISM

7-14. General. The traversing mechanism turns the weapon right or left in a horizontal plane. The traversing mechanism may have manual or power operation.

a. Manual Operation. All towed field artillery weapons are traversed manually through a gear train operated by a handwheel. A manual system is also included in self-propelled field artillery weapons in case of a power failure.

b. Power Operation. All current self-propelled field artillery weapons are traversed by hydraulic power. Power operation increases the speed of traversing and reduces the manual effort required.

7-15. Manually Operated Traversing Mechanisms. There are two pintle-type traversing mechanisms used on split-trail artillery weapons. The screw type is used on the M101/M1OlA1 howitzer, and the rack and pinion type is used on the M114A1 howitzer and the M198 howitzer. The carriage traversing-type traversing mechanism is used on the M102 howitzer.

.

a. Pintle-Type Traversing Mechanism. With this type of traversing mechanism, the weapon is rotated about a vertical pivot fixed on the underpart of the top carriage. The bottom carriage contains the bearing or receptacle for the pintle and the base on which the top carriage rotates in traverse. Although a 1600-mil traverse may be possible with the pintle-type traversing mechanism, current mechanisms have a 853-mil maximum traverse. The screw and the rack and pinion are the two types of pintle-type traversing mechanisms.

(1) Screw type (fig 7-12). This type consists of a handwheel attached to the screw shaft on which the swivel nut is threaded. The handwheel bracket is attached to the bottom carriage. Turning the handwheel causes the screw shaft to telescope in or out of the swivel nut, causing the weapon to traverse.

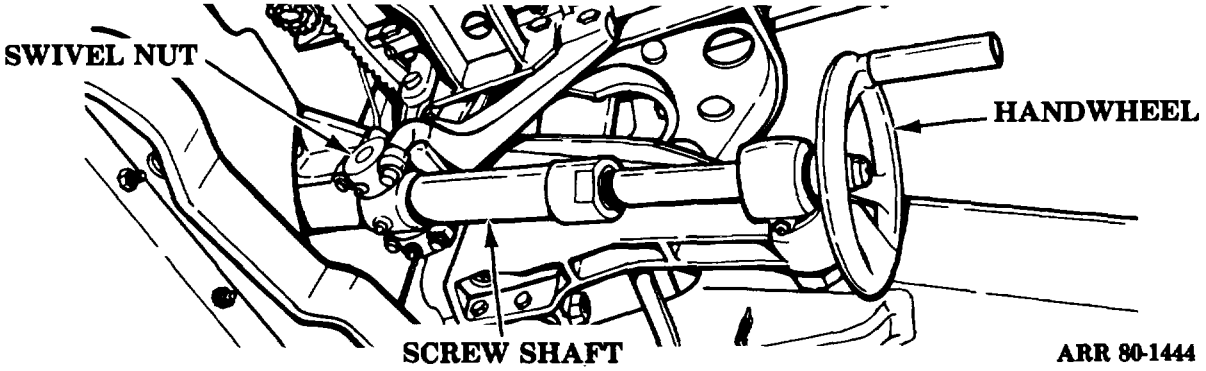

Figure 7-12. Screw-type traversing mechanism.

(2) Rack and pinion type (fig 7-13). This type consists of a handwheel and a shaft which operates through a train of gears and a rack and pinion. The handwheel, shaft, and gear train are attached to the top carriage. The rack is attached to the bottom carriage. Turning the handwheel causes the pinion gear to rotate and move across the rack. This causes the top carriage to revolve, traversing the weapon.

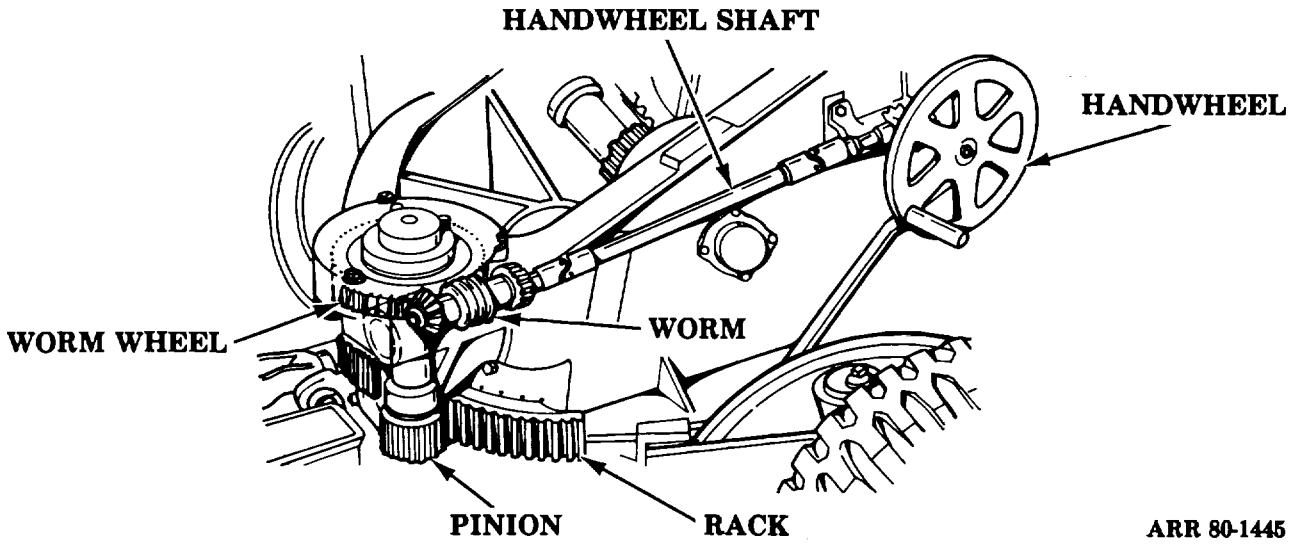

Figure 7-13. Rack and pinion-type traversing mechanism.

b. Carriage Traversing-Type Traversing Mechanism (Fig 7-14). During firing, the wheels are retracted and the weapon is supported by a firing platform or baseplate. The firing platform contains a socket in the center around which the weapon may be traversed 6400 mils. A traversing rubber-treaded roller is attached to the end of the box trail. A series of gear boxes and shafts transmit power from the handwheel to the roller to traverse the weapon.

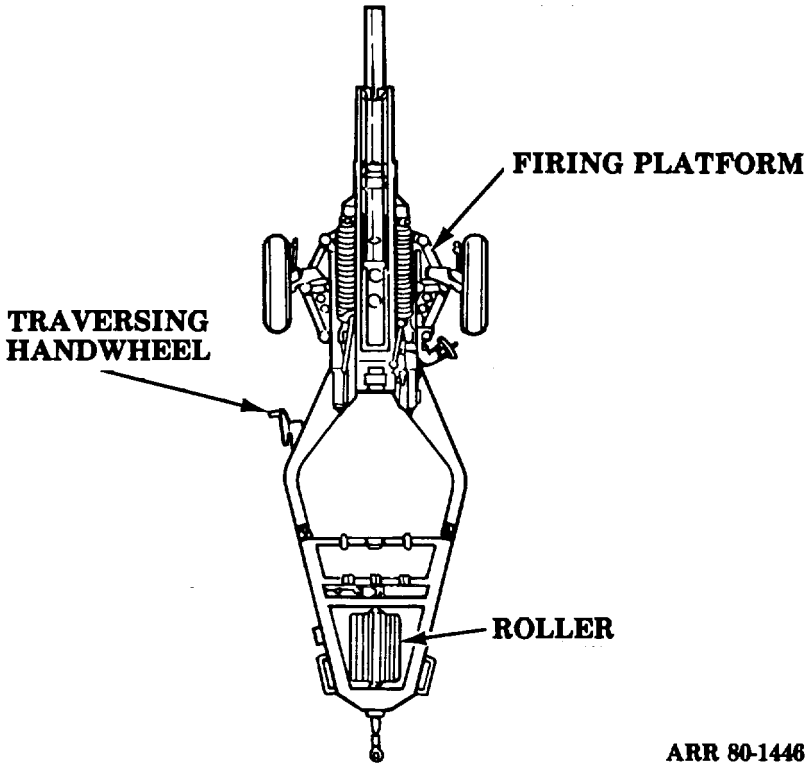

Figure 7-14. Ring gear-type traversing mechanism.

7-16. Power Operated Traversing Mechanism. All self-propelled field artillery weapons use the ring gear-type traversing mechanism (fig 7-15) operated by hydraulic power. The hydraulic power is supplied by the vehicle main hydraulic system. This traversing mechanism consists of large bearings operating between the race ring and the race. The race ring is attached to the vehicle hull. The race is attached to and supports the turret, which rotates during traverse. A hydraulic motor drives the traversing gear train. A spur pinion gear, meshing with the ring gear, drives the ring gear, which traverses the turret and gun. Some self-propelled weapons have a 6400-mil traverse.

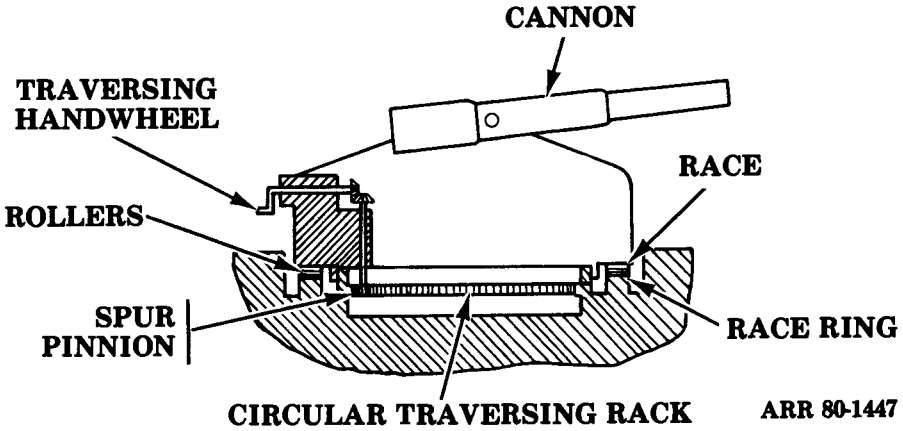

Figure 7-15. Ring gear-type traversing mechanism.

Section VI. AXLE AND EQUALIZER

7-17. Axle (Fig 7-16). An axle supports the weapon during travel and firing. On the ends of the axle are spindles on which the wheels are mounted. In some weapons, the bottom carriage is designed to mount the components of an axle (fig 7-17), but it is not specifically identified as an axle. The only current field artillery weapons with a true axle are the M10OA1 howitzer and the M114A1 howitzer.

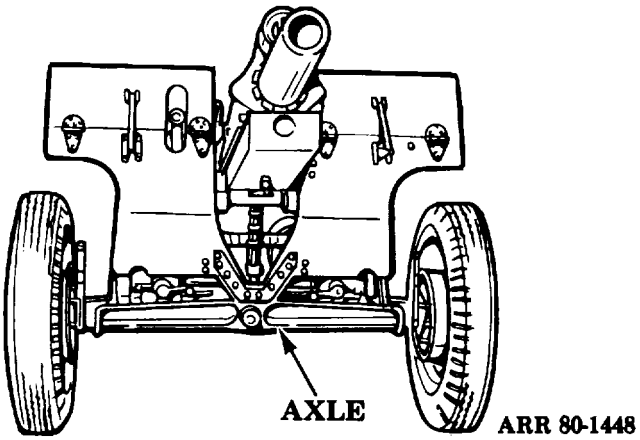

Figure 7-16. Axle.

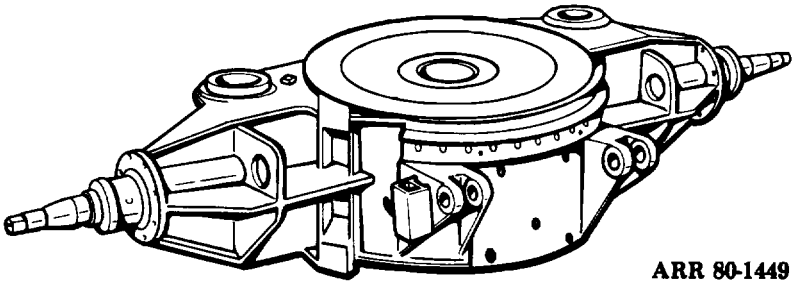

Figure 7-17. Bottom carriage (axle).

7-18. Equalizer (Fig 7-18).

a. Description. The equalizer is a mechanical device that keeps the two wheels and two trail ends of an emplaced weapon in contact with uneven terrain. It transmits the weight of the weapon and the shock of firing through the four ground contact points. The MlOlA1 howitzer is the only field artillery weapon that has an equalizer.

b. Operation. The equalizer consists of a horizontal support, a pivot pin, and gib bearings. The horizontal support is located behind the axle. Each end of the support is pinned to one end of the trails. The support rotates about a horizontal pivot pin that secures the support to the midpoint of the axle. On each side of the support are gib bearings, which guide the support parallel to the axle when the support rotates. This allows the support and trails to rotate about the pivot pin and to be in a position other than that of the axle, thereby keeping the wheels and trail ends in contact with uneven terrain. When the weapon is placed in the traveling position, the front ends of the trail overlap ramps on the axle, locking the support and axle together in parallel positions and relieving some of the pressure on the pivot pin.

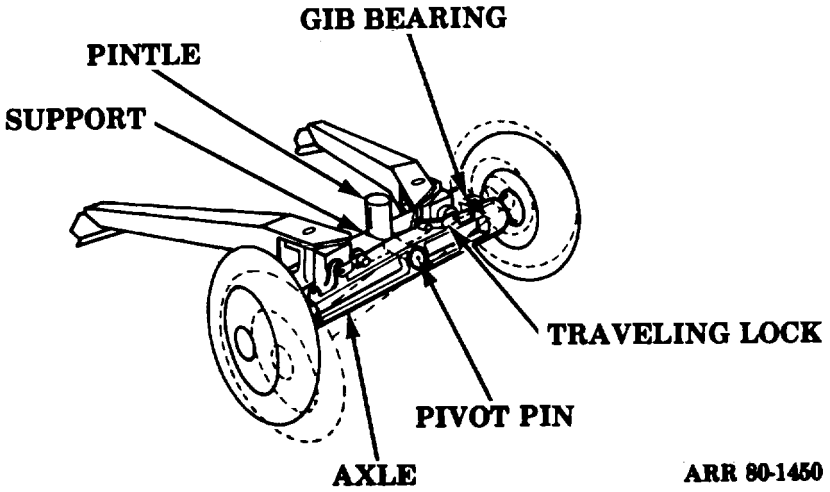

Figure 7-18. Equalizer.

Section VII. FIRING SUPPORT AND RETRACTABLE SUSPENSION SYSTEM

7-19. General. The shock of firing can raise an artillery weapon from the ground and may even cause the weapon to bounce on its tires and move out of position. To prevent the weapon from bouncing on its tires, the wheels must be raised clear of the ground and the carriage must be supported on a more stable firing support. The two main types of firing supports are the firing jack used on the M114A1 howitzer, and the firing platform (firing base or baseplate), used on the M102 howitzer and the M198 howitzer. If a firing platform is used, the weapon must also be equipped with a retractable suspension system.

7-20. Firing Support.

a. Firing Jack (Fig 7-19). The firing jack is attached to the front of the bottom carriage and supports the weight of the front part of the weapon when the wheels are off the ground. The threepoint suspension system, formed by the firing jack and two trails, results in stability during firing. A firing jack float is attached to the lower end of the plunger to give the firing jack sufficient bearing surface on the ground. When in the traveling position, the float is mounted between stowage brackets on top of the trails.

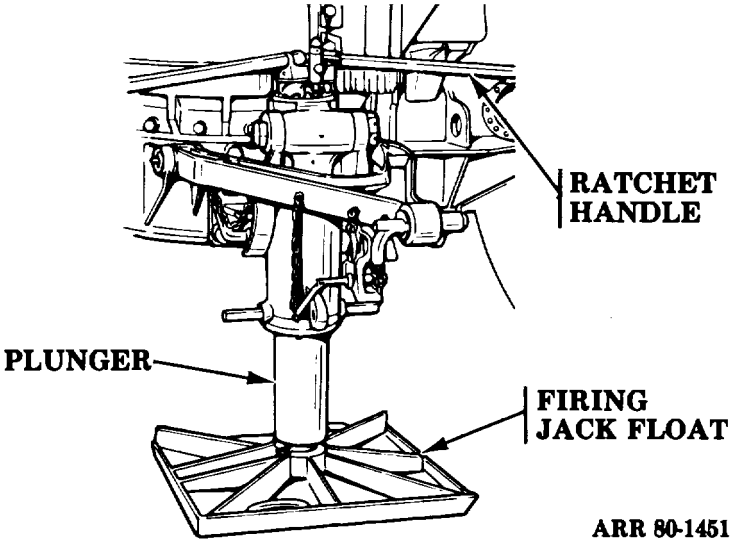

Figure 7-19. Firing jack.

b. Firing Platform. The firing platform is similar to the firing jack in that it provides a single support for the weight of the weapon normally carried by the two wheels. It also contains a socket in the center around which the weapon can be traversed 6400 mils. There are two types of firing platforms on current field artillery weapons.

(1) The eight-sided aluminum firing platform (fig 7-20) on the M102 howitzer has holes in the outer edge so that stakes can be driven into the ground for greater stability during firing. This firing platform is suspended beneath the weapon during travel.

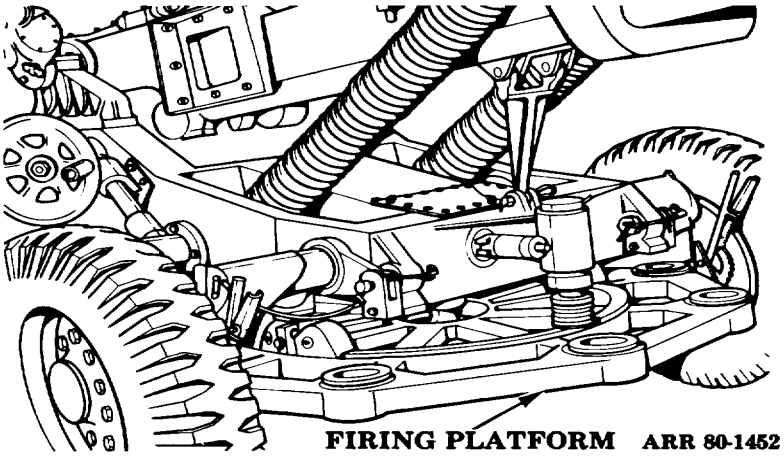

Figure 7-20. Firing platform on the M102 howitzer.

2) The M198 howitzer has a circular aluminum firing platform (fig 7-21) which is removed and stored on the trails for travel.

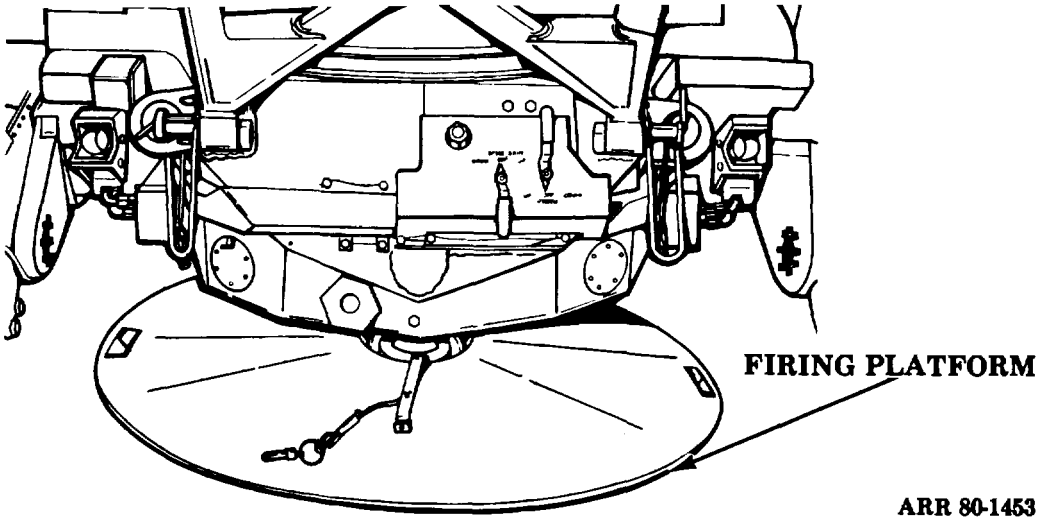

Figure 7-21. Firing platform on the M198 howitzer.

7-21. Retractable Suspension System. The retractable suspension system provides a way to lower the weapon onto the firing platform for firing and to raise the weapon for travel. The retractable suspension system has two pivot arms, one on each side of the carriage. The lower end of each pivot arm contains a spindle on which a wheel is mounted. Locks or locking pins lock the retractable suspension system in the travel position. The mechanism for operating the system is one of two types.

a. Manual Operation. A handcrank and gear train are used to rotate the pivot arms to lower and raise the weapon (fig 7-22). The M102 howitzer has a manually operated retractable suspension system.

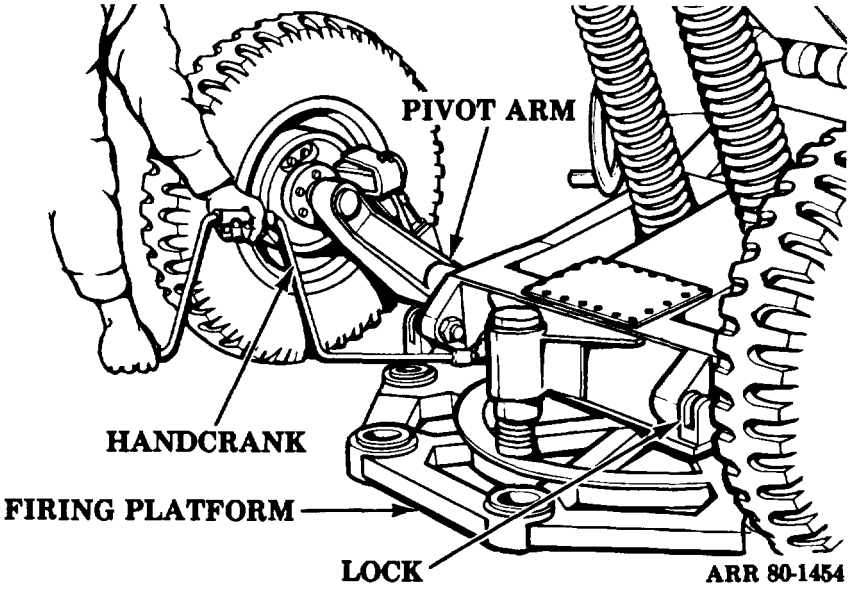

Figure 7-22. Manual retractable suspension system.

b. Hydraulic Operation. Two hydraulic hand pumps and a hydraulic manifold assembly are used to rotate the pivot arms to lower and raise the weapon (fig 7-23). They operate similarly to a hydraulic jack. The hydraulically operated retractable suspension system is used on the M198 howitzer.

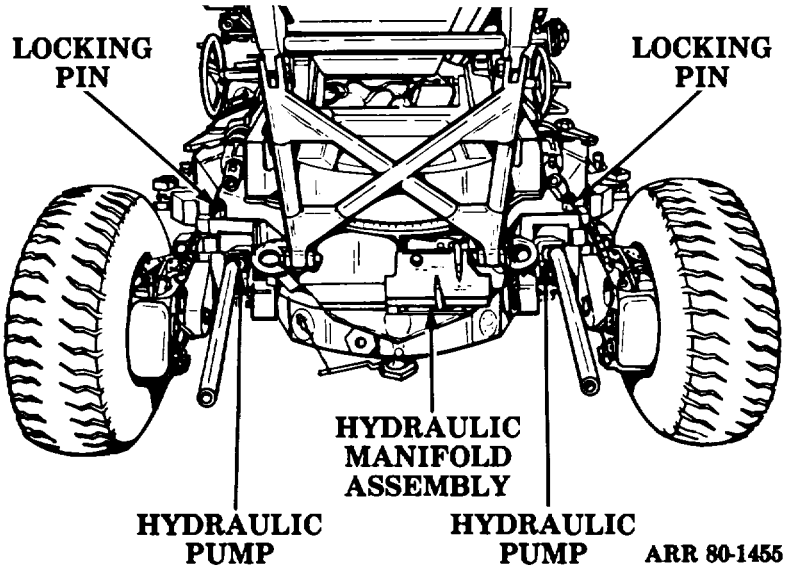

Figure 7-23. Hydraulic retractable suspension system.

Section VIII. TRAIL AND SHIELDS

7-22. Trail.

a. General. The forces of recoil not taken up b) the recoil mechanism and firing support are transmitted to the ground through the trail. The trail stabilizes the weapon and keeps it from moving out of the original firing position. The trail also connects the weapon to the prime mover by a lunette and pintle for transport. The forward end of the trail is fastened to the axle or the lower portion of the carriage. A spade may be attached to the rear of the trail. There are two types of trails used on current field artillery weapons.

(1) Split trail (fig 7-24). A split trail is composed of two sections attached to the axle or bottom carriage near the wheels. Usually a split is made of box sections with trail spades on the end. For firing, the trails are spread as far as permitted by the wheels or trail stops. The trail spread (in degrees) is equal to or greater than the maximum traverse (in mils) of the weapon. A lunette on one trail end and a lock on the other trail end hold the trails together during traveling. The split trail is used on the M101/M1OlA1 howitzer, the M114/M114A1 howitzer, and the M198 howitzer.

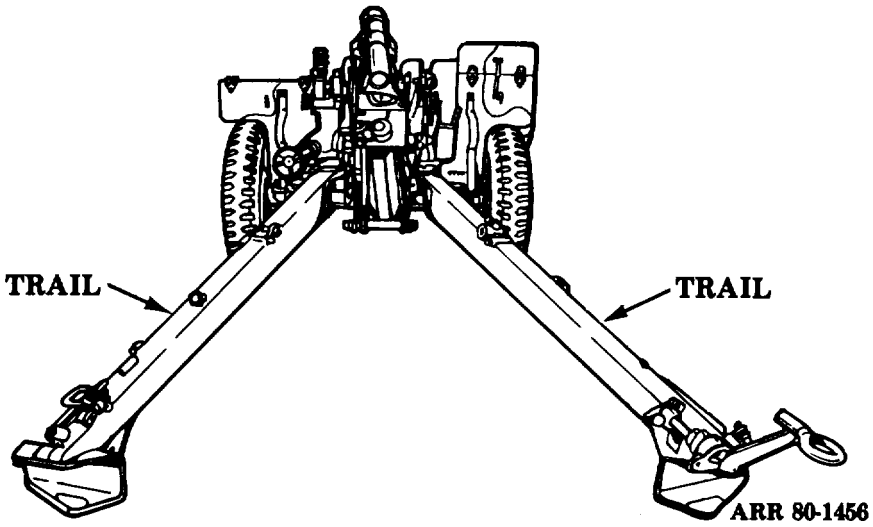

Figure 7-24. Split trail

(2) Box trail (fig 7-25). A box trail is made as a single, rigid, built-up piece. Side plates or brackets, which extend upward, have bearings to receive the trunnions. There is an opening in the trail so that, when the cannon recoils, it will not hit the trail The M102 howitzer has a box trail.

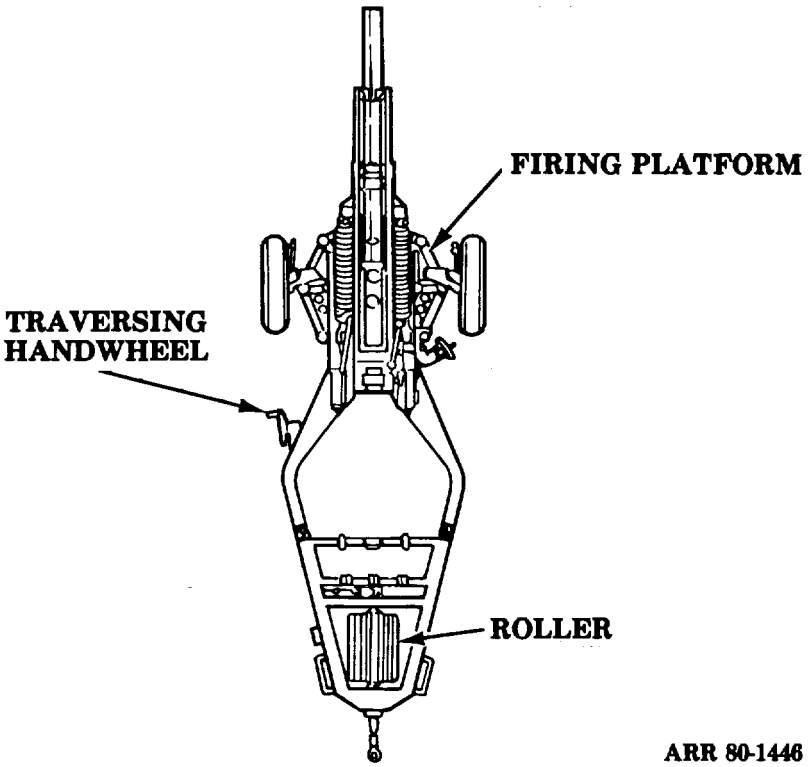

Figure 7-25. Box trail.

b. Lunette and Pintle. A lunette and pintle provide a way of quickly and securely coupling or uncoupling the weapon to or from the prime mover. The lunette is on the forward end of the trail in the traveling position, and the pintle is on the rear end of the prime mover. All towed weapons and prime movers have a standard size of lunette and pintle for complete interchangeability of prime movers with towed weapons.

(1) Lunette (fig 7-26). The lunette, attached to the trail, is designed so it does not interfere with emplacing of the weapon. Some lunettes must be removed or moved up out of the way when the spade is dug in for firing.

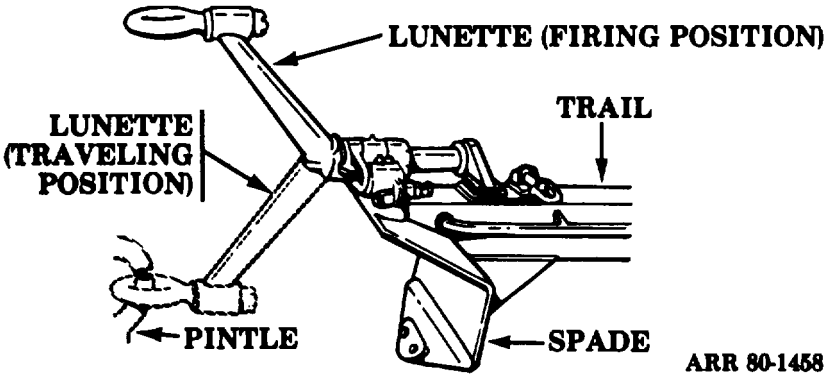

Figure 7-26. Lunette.

2) Pintle. The pintle is a quick-opening and closing latch and hook, attached to the rear of the prime mover, to which the lunette of the weapon is attached for traveling (fig 7-27). The pintle is at a convenient height so that the lunette of the towed weapon can be easily placed in it.

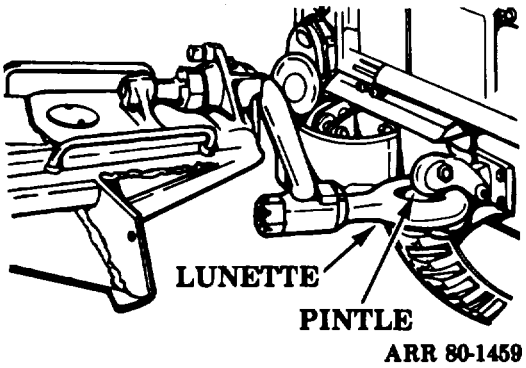

Figure 7-27. Lunette coupled to pintle.

c. Spade. A spade is a bearing surface, usually located on the end of the trails, which is forced or dug into the ground to restrict movement of the weapon during recoil. There are two types of spades.

(1) Fixed spade (fig 7-28). A fixed spade is rigidly fastened to the end of a trail. It may be forged, cast, or built up.

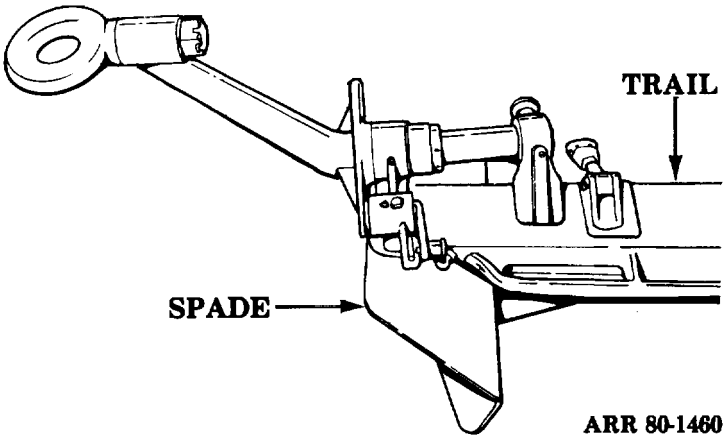

Figure 7-28. Fixed spade

(2) Detachable spade (fig 7-29). A detachable spade is installed on the end of the trail for firing and is removed for traveling.

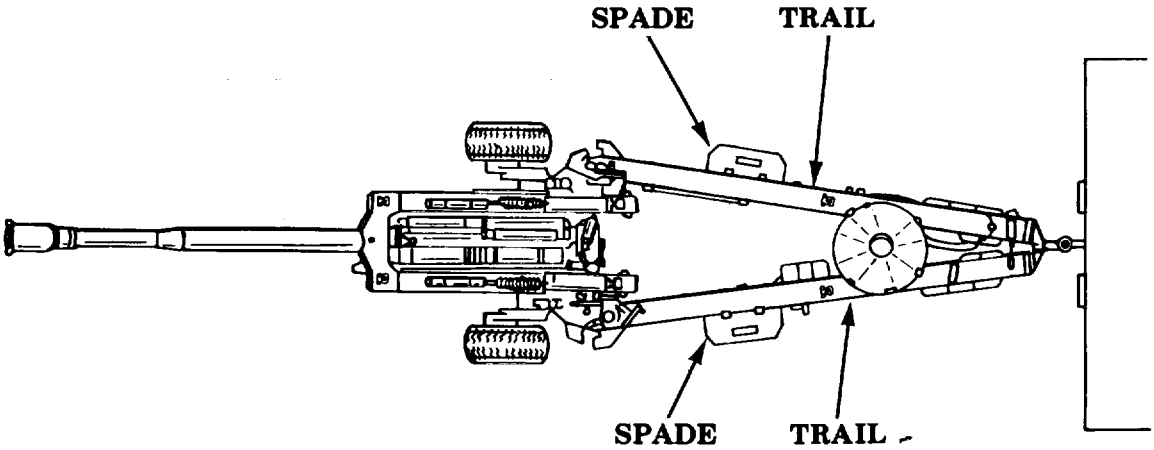

A. SPADES STOWED **ARR 80-1461**

Figure 7-29. Detachable spade (1 of 2)

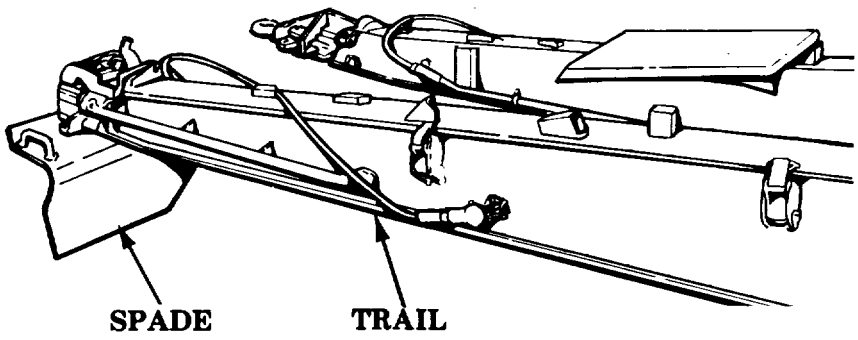

B. SPADES INSTALLED ARR 80-1462

Figure 7-29. Detachable spade (2 of 2)

7-23. Shields. Shields (fig 7-30) protect the weapon and the crew from enemy fire coming from directly in front of the weapon. Armor-plated shields have attached side shields, top shields, and an apron The M101/M1OlAl howitzer and the M114/M114A1 howitzer are equipped with shields.

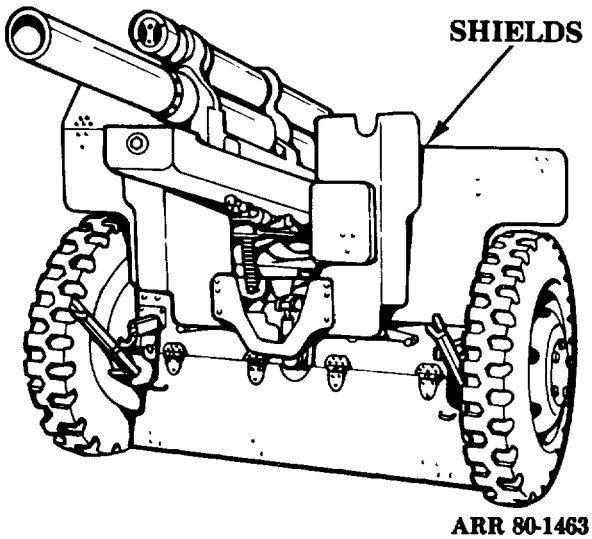

Figure 7-30. Shields.

Section IX. BRAKES

7-24. General. All towed artillery weapons have parking brakes. The larger weapons have service brakes and parking brakes. Parking brakes are operated by handbrake levers on the carriage and are used only to park the weapon when it is coupled to or uncoupled from the prime mover. Service brakes are operated from the prime mover to slow down or stop the weapon as the prime mover slows down or stops.

7-25. Parking Brakes (Fig 7-31).

a. Description. The conventional brake drum and expanding brake band mechanism used on automotive vehicles is the braking mechanism used on towed artillery weapons. For towed vehicles having only parking brakes, the brake mechanism is operated by a handbrake lever. For towed vehicles having parking and service brakes, the brake mechanism is operated by the handbrake lever or by the prime mover brake pedal.

b. Operation (Fig 7-31). Applying the handbrake lever operates the camshaft, to which it is attached, and the opposite camshaft through the yoke rod and lever assembly. The handbrake cams force the ends of the wide main brakeshoes outward against the brakedrum, applying the braking effort. A ratchet, pawl and releasing handle assembly prevent the return of the handbrake lever until the pawl is released manually from the ratchet.

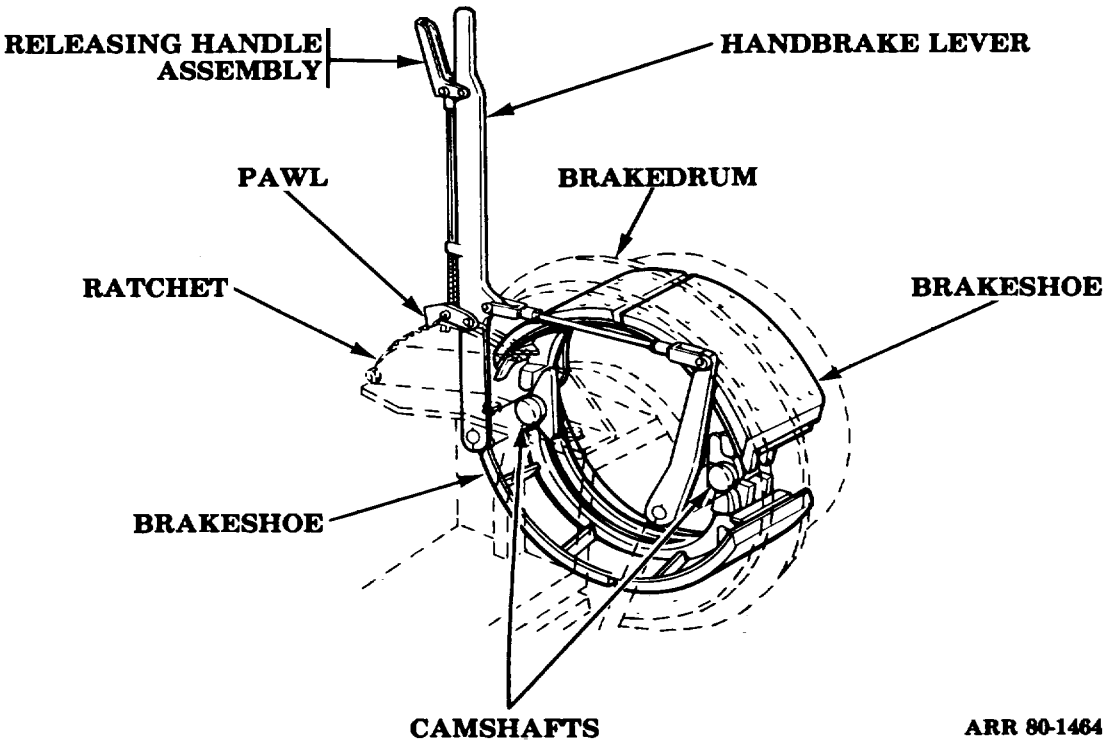

Figure 7-31. Parking brake.

7-26. Service Brakes. The service brakes provide a way to operate the weapon brakes in conjunction with the prime mover. Service brakes used on towed artillery weapons are operated by air pressure. The air-pressure brake system is commonly referred to as airbrakes.

a. Description. Normally the weapon airbrake system is kept charged to the same pressure as the prime mover airbrake system, because the air pressure can flow from the reservoir on the prime mover, through the emergency line and relay emergency valve, to the reservoir on the weapon. The power brakes on each wheel of the weapon are the two shoe commercial type. The brakeshoes are spring released and are set by a cam on a camshaft which rotates when air, under pressure, enters the airbrake diaphragm (fig 7-32), acting through a piston rod and slack adjuster lever. The airbrake diaphragm converts the energy of the compressed air into the mechanical force necessary to rotate the brake camshafts. Turning the takeup screw on the slack adjuster lever compensates for wear on the brakeshoes.

b. Operation.

(1) When the driver of the prime mover applies the brakes, air pressure, controlled by the prime mover brake valve, flows through the service line to the relay emergency valve on the weapon. This causes the relay emergency valve to react and permits the same air pressure to flow from the weapon reservoir to the airbrake diaphragm, which applies the brakes. Moving the prime mover brake valve further to the fully applied position results in correspondingly higher air pressure entering the airbrake diaphragm and a more severe brake application.

(2) If the weapon breaks away from the prime mover, the relay emergency valve reacts to prevent air pressure in the weapon reservoir from flowing out of the broken hose line. The relay emergency valve also allows air pressure to flow from the reservoir to the airbrake diaphragm, applying the brakes automatically.

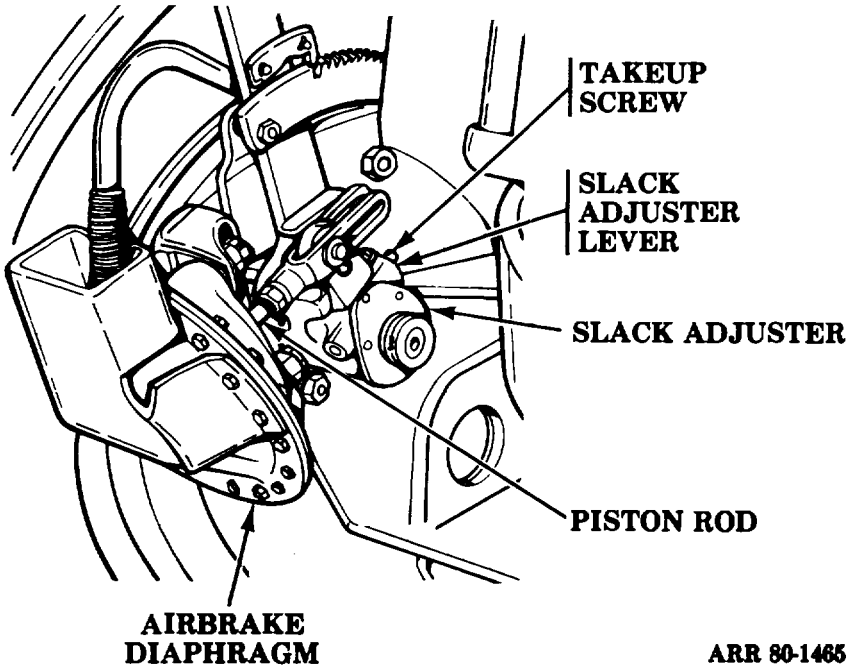

Figure 7-32. Airbrake diaphragm.

PART THREE
GUIDED MISSILE SYSTEMS
CHAPTER 8
THE LANCE AND PERSHING GUIDED MISSILE SYSTEMS

Section I. GENERAL

8-1. Scope. This chapter contains information about the Lance and Pershing guided missile systems. A description of each system and an explanation of the function of the major components are included.

Section II THE LANCE GUIDED MISSILE SYSTEM

8-2. Description. The Lance guided missile system (fig 8-1) is a reliable, low-cost system that can be operated under most climatic conditions. The system consists of the Lance missile, two types of launchers, a loader-transporter vehicle, and auxiliary equipment. The single-stage, prepackaged, liquid-propellant rocket and an advanced guidance system invulnerable to electric countermeasures make the Lance guided missile system a valuable corps general support weapon.

8-3. Components. The major components of the Lance guided missile system are as follows:

a. Lance missile.
b. Self-propelled launcher (SPL).
c. Zero-length launcher (LZL).
d. Basic launch fixture.
e. Mobility kit.

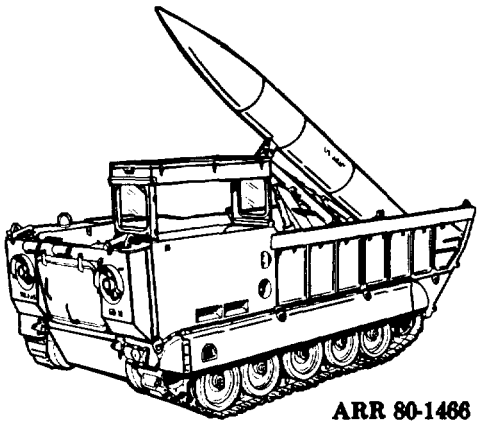

Figure 8-1. Lance guided missile system on M752 self-propelled launcher.

8-4. Lance Missile.

a. Trajectory. The Lance missile is described as a ballistic missile because it uses a directional control, automatic meteorological compensation guidance system so that the missile can travel a pure ballistic trajectory after boost termination.

The trajectory (fig 8-2) consists of the boost phase, the sustain phase, and the free-flight stage.

(1) Boost phase. During the boost phase, the missile accelerates under full thrust until, after 1 to 7 seconds, it attains the velocity needed to carry it to the target.

(2) Sustain phase. During the sustain phase, the maximum boost phase velocity must be sustained throughout the remaining powered portion of flight. The velocity is sustained by the variable thrust sustainer engine which produces equal thrust to overcome drag. This enables the missile to follow a trajectory affected only by gravity.

(3) Free-flight phase. Free flight, resulting from sustainer engine cutoff (SECO), must occur on maximum range flights to avoid possible random propellant burnout. Propellant burnout could cause a target miss due to possibly erratic missile behavior. The SECO time is preset into the warhead during prefire operations.

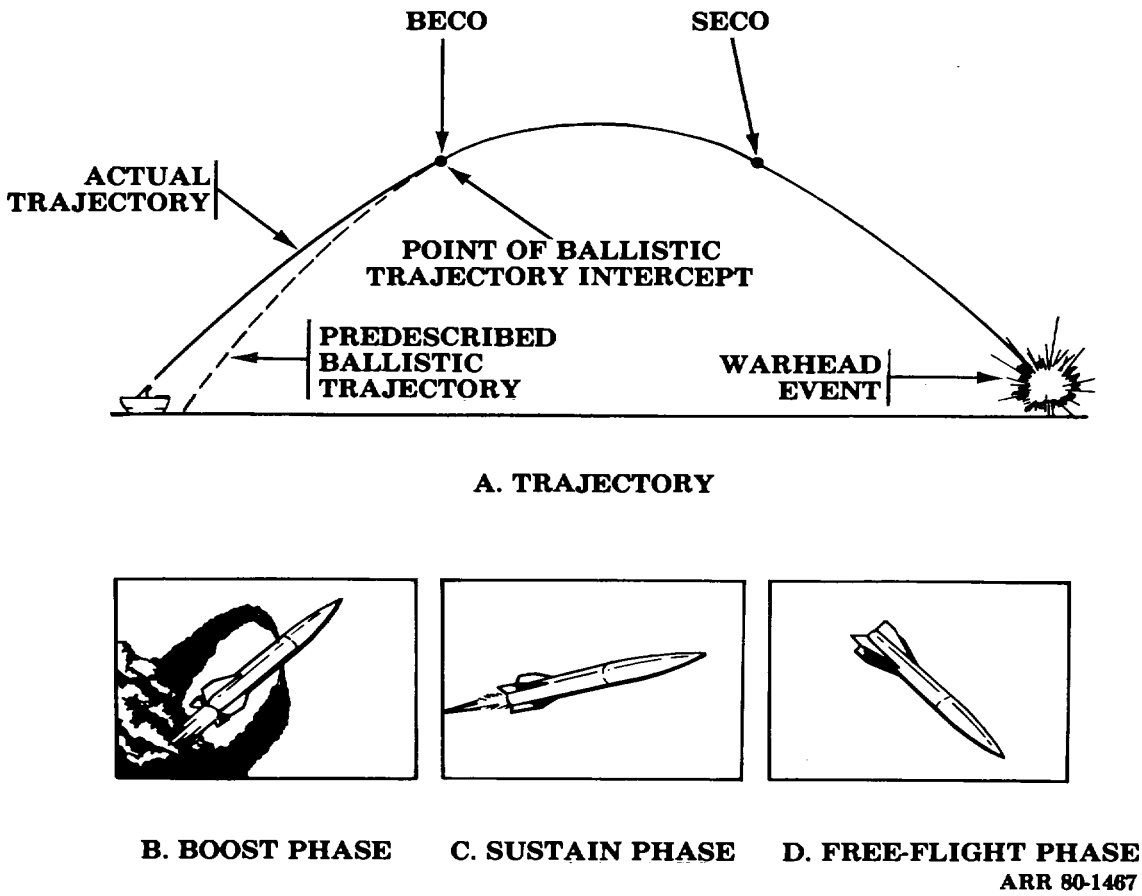

Figure 8-2. Trajectory of Lance missile.

b. Components. The Lance missile (fig 8-3) is divided into the warhead section, the missile main assemblage, and four control surfaces. Containers for each of these components are provided for storage and transporting.

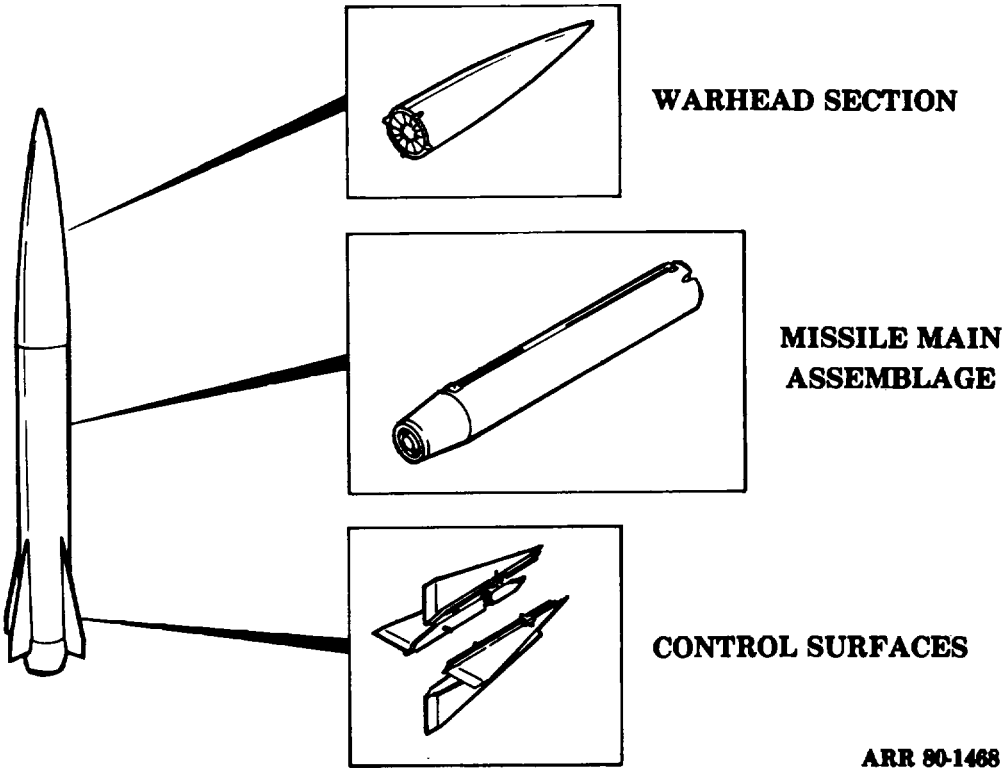

Figure 8-3. Lance missile.

(1) M251 warhead section (fig 8-4). The M251 high-explosive, nonnuclear warhead houses the M811 fuze and 825 BLU-63B fragmentation bombs. The warhead section is divided into the structure, the fuze system, the cargo, and the cargo-release system.

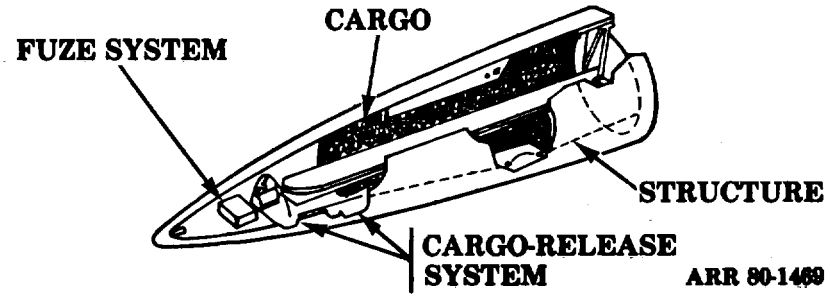

Figure 8-4. M251 warhead section.

(2) M5 or M6 missile main assemblage. The M5 and M6 missile main assemblages (MMA) are similar, except the M6 is used for training. It contains no pyrotechnic devices or propellants. The propellant feed system is filled with liquids with a specific gravity near that of the propellant used in a tactical round. The M5 missile main assemblage (fig 8-5) consists of a guidance set, a propellant feed system, and a rocket engine system. These items are integrated into a welded structure with external receptacles, access covers, indicators, and controls for safe operation. An external electrical cable harness protects the cabling that transmits electrical commands from the guidance set to the rocket engine system.

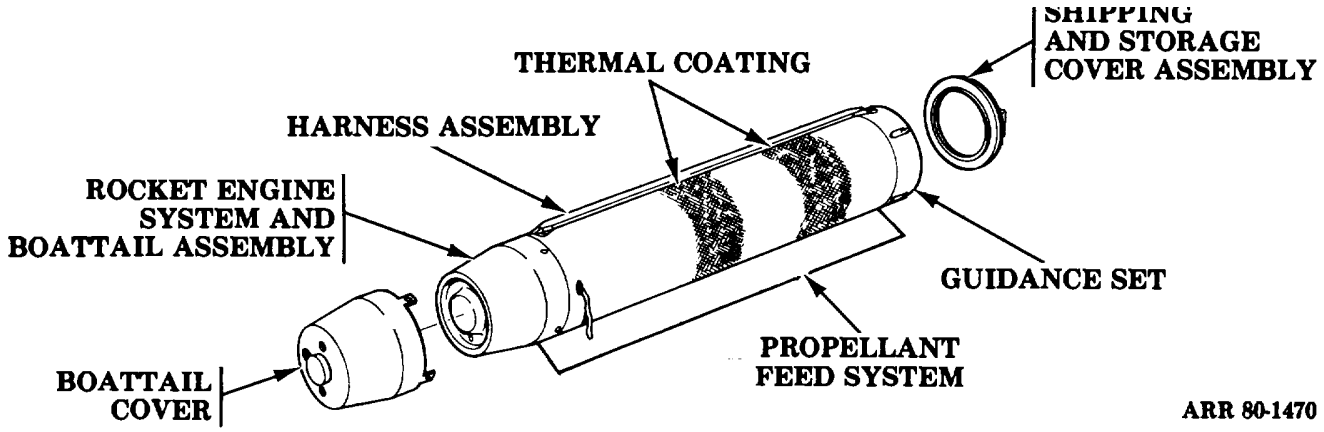

Figure 8-5. Missile main assemblage.

(a) Guidance set. The guidance set (fig 8-6) consists of directional control electronics, velocity control electronics, and power supply electronics subsystems.

1. Directional control electronics (DCE) subsystem. The DCE subsystem ensures that the missile enters the ballistic curve at the desired entry point. The primary sensing device is a gyroscope.

2. Velocity control electronics (VCE) subsystem. During the boost phase of flight, the VCE subsystem determines when the missile has attained the appropriate velocity and then causes boost termination. During the sustain phase of flight, it regulates the missile velocity. The primary sensing device is an accelerometer.

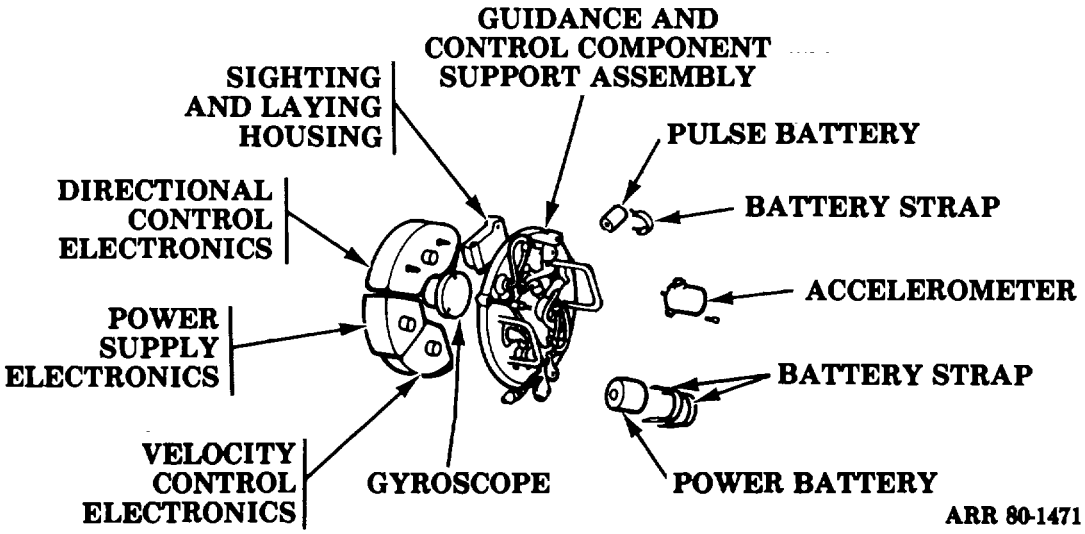

Figure 8-6. Guidance set.

(b) Propellant feed system. The propellant feed system is located between the guidance set and the rocket engine system. The propellant feed system stores the propellants in separate tanks since the propellants are hyperbolic, i.e., they will spontaneously ignite if they come into contact with each other. The system also delivers the propellants to the rocket engine on command.

(c) Rocket engine system. The rocket engine system (fig 8-7) is mounted to the rear bulkhead of the propellant feed system and is housed within the boattail assembly. The rocket engine system provides the thrust necessary to propel the missile to the target. Operating on signals from the guidance set, the rocket engine system corrects missile altitude errors during the boost phase and controls the sustainer thrust during the sustain phase of flight. This causes the missile to travel in the appropriate ballistic trajectory.

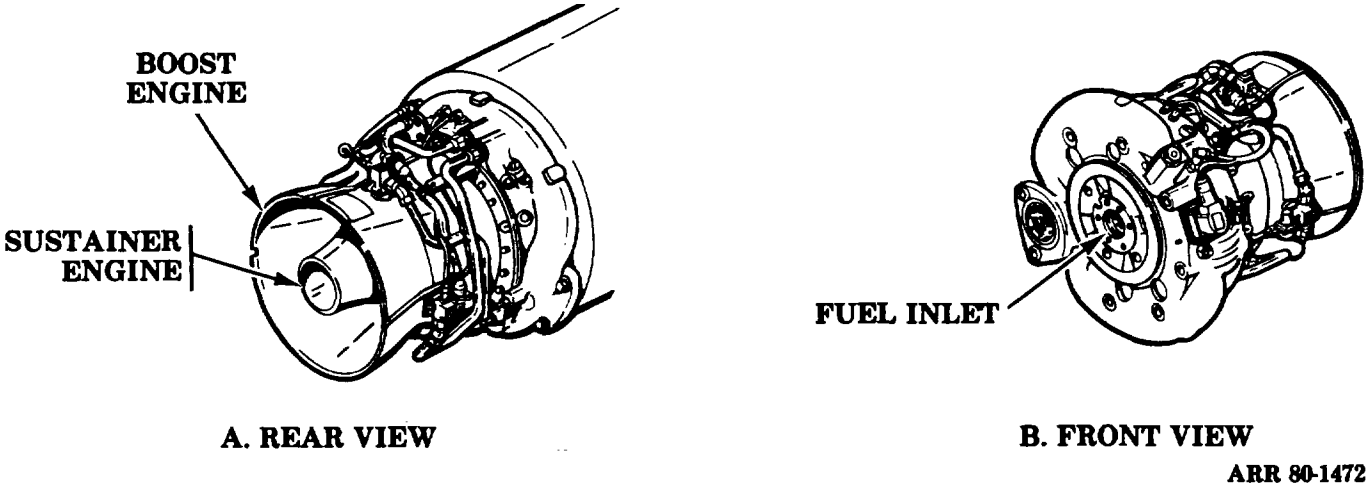

Figure 8-7. Rocket engine system

(3) M29 and M30 control surfaces. The four detachable control surfaces (fig 8-8) are of aluminum honeycomb (M29, large) and forged construction (M30, small) with an external aluminum surface. They can be quickly mounted on or removed from the missile main assemblage. The control surfaces provide stability during flight by maintaining the initial spin generated by the propulsion system. The M29 control surfaces are used with the light warhead; the M30 control surfaces are used with the heavy warhead.

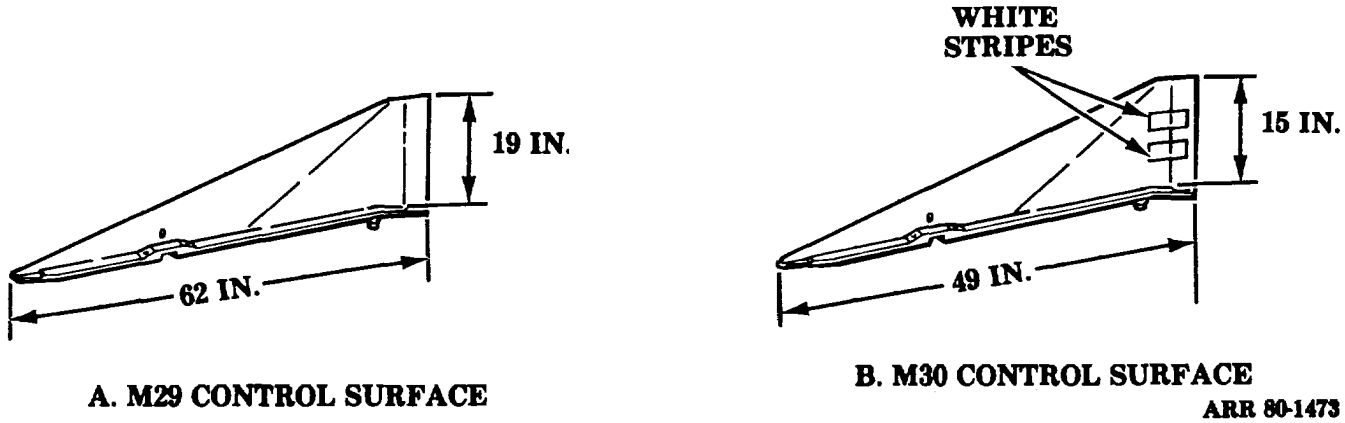

Figure 8-8. Control surfaces.

85. Launchers and Launcher Equipment.

a. Launchers. The M752 self-propelled launcher or the zero-length launcher (LZL) is used to launch the Lance missile.

(1) M752 self-propelled launcher. The M752 self-propelled launcher (fig 8-1) consists of the M667 basic vehicle, a basic launch fixture, and a warhead section support assembly. The basic launch fixture is mounted in the cargo compartment of the basic vehicle and is capable of transporting a completely assembled missile, as well as all required equipment.

(2) Zero-length launcher (LZL). The zerolength launcher (fig 8-9) consists of the basic launch fixture and adaption kit that includes stabilizing jacks, wheel and tire assemblies, trailing arms, and a tow bar. The LZL can be towed by any standard M35 2-1/2-ton vehicle or 5-ton cargo truck at highway and cross-country speeds. Over short distances, the LZL can be moved manually.

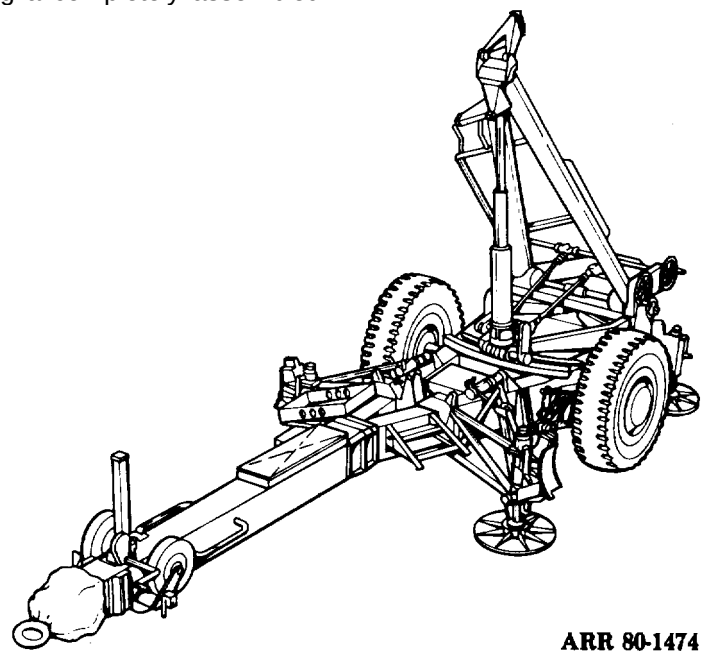

Figure 8-9. Zero-length launcher.

b. Launcher Equipment.

(1) Basic launch fixture. The basic launch fixture (fig 8-10) consists of the base frame, the traverse frame, the elevating and traversing mechanism, and the launch truss assembly.

(a) Base frame. The base frame is the main support of the launcher. Most of the other major components are attached to it.

(b) Traverse frame. The traverse frame, which pivots on top of the base frame, supports the elevating and traversing mechanism and the launch truss assembly.

(c) Elevating and traversing mechanism. The elevating and traversing mechanism consists of the handwheels, shafts, and gears used to position the Lance missile at the desired elevation and azimuth.

(d) Launch truss assembly. The launch truss assembly supports the missile on the launcher and pivots from the rear of the traverse frame for elevation.

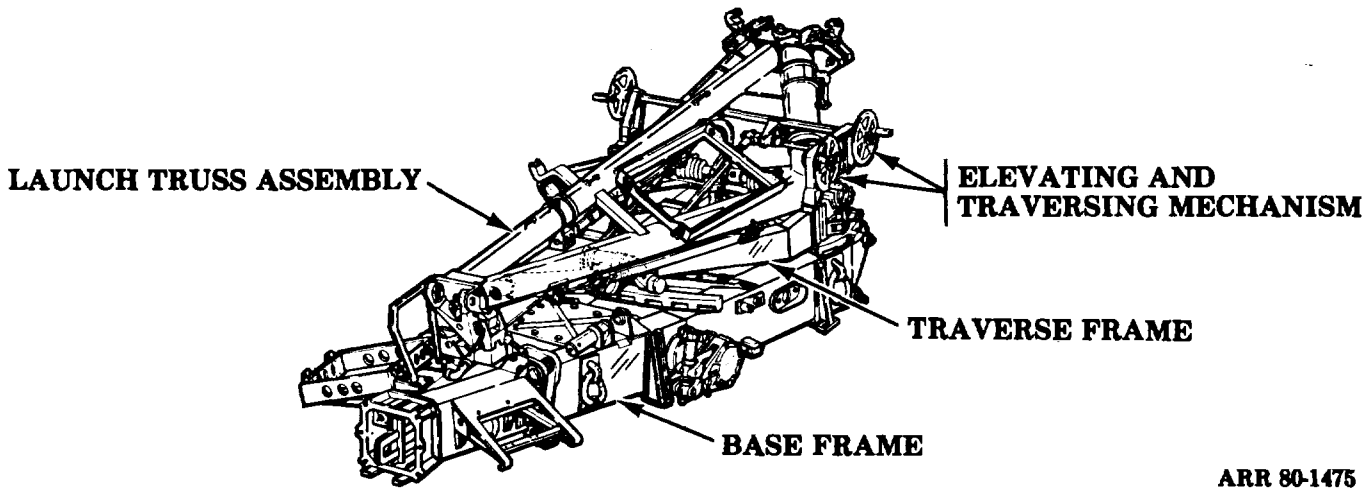

Figure 8-10. Basic launch fixture.

(2) M234 mobility kit. The M234 mobility kit (fig 8-11) carries all the equipment necessary to convert the basic launch fixture from the self-propelled configuration to the zero-length launcher configuration. The mobility kit contains the adaption kit and the missile cover used to convert the SPL to the LZL.

(a) Adaption kit. The adaption kit includes the tow bar, wheel and tire assemblies, stabilizing jacks, pins and springs, and the missile cover.

(b) Trailering hardware. The trailering hardware consists of items needed to support and secure the adaption kit items in a towable configuration. These items include a rear frame assembly, a front beam assembly, jack bolt assemblies, a tool box protective cover, two strap assemblies, and a spare wheel and tire assembly.

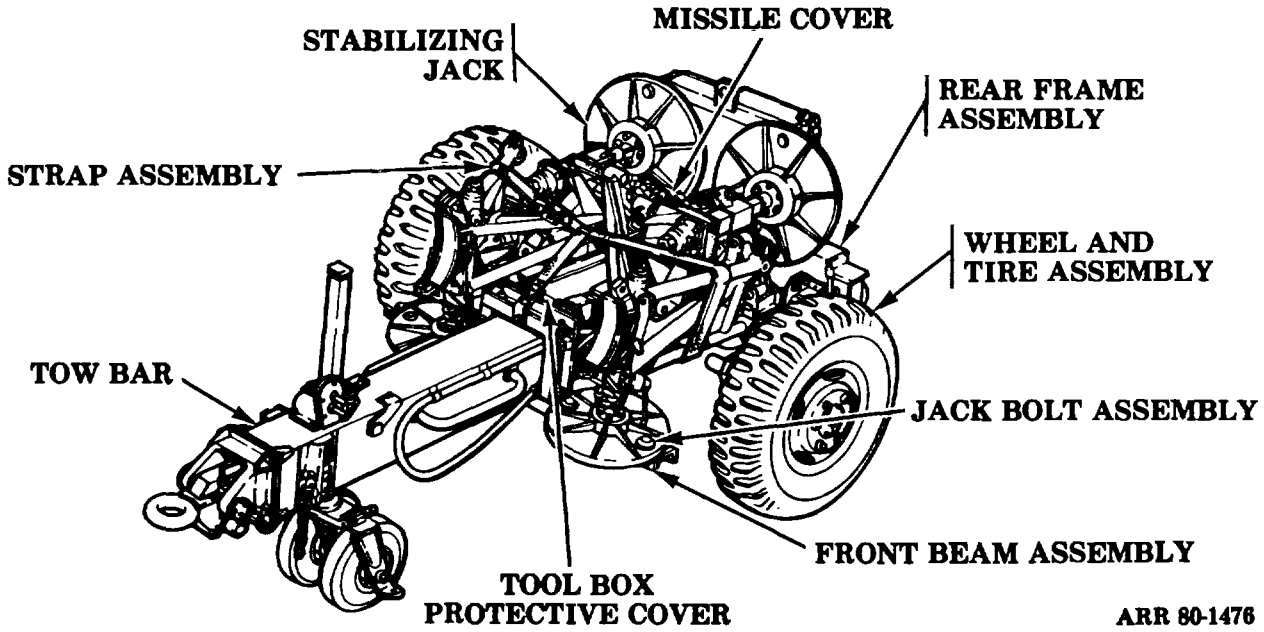

Figure 8-11. Mobility kit.

Section III. THE PERSHING GUIDED MISSILE SYSTEM

8-6. Description. The Pershing guided missile system (fig 8-12) consists of a two-stage, solid propellant, surface-to-surface missile and associated ground support equipment. The system is reliable, flexible, and capable of fast reaction in engaging a variety of targets. All units of the system are transported by vehicles that allow rapid movement over improved roads. These vehicles can also move the system over unimproved terrain.

87. Components. The major components of the Pershing guided missile system are the Pershing missile and the ground support equipment. The information in this section will deal with the missile components only.

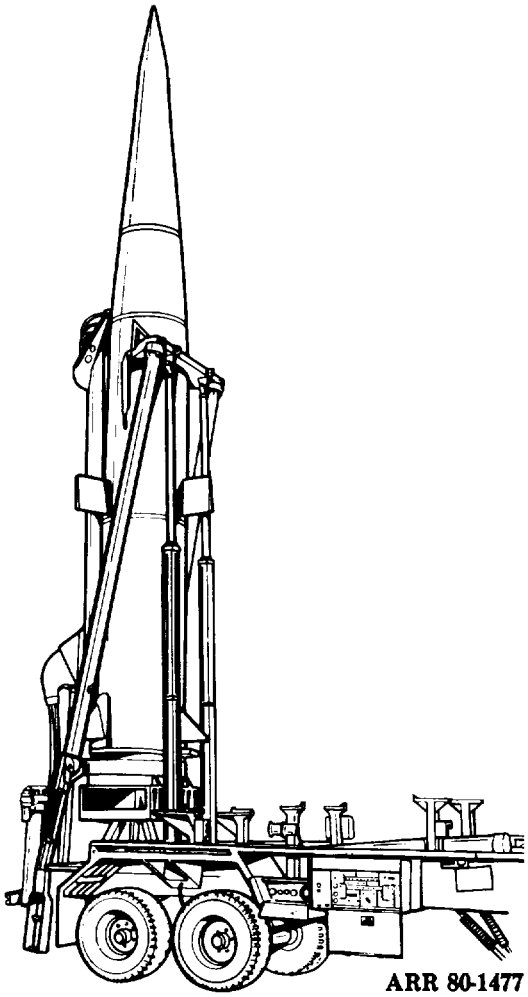

Figure 8-12. Pershing guided missile system.

8-8. XMGM-31A Pershing Missile.

a. Description. The four-section Pershing missile is approximately 35 feet long and 40 inches in diameter, and weighs 10,275 pounds. Each section of the missile is interchangeable with a like section from another Pershing missile. The sections are joined by segmented splice bands. The splice band segments are held in place by four bolts. Two bolts between the first and second stages and between the guidance and warhead sections contain explosive charges that detonate when stage separation is required. The splice band securing the second stage to the guidance section does not contain explosive bolts since the sections do not separate during missile trajectory. The four sections of the Pershing missile (fig 8-13) are as follows:

(1) M101 guided missile propulsion section (first stage).

(2) M102 guided missile propulsion section (second stage).

(3) ANIDJW-49 guidance section.

(4) XM28, XM28A1, M141, M141A1, XM142, or XM142A1 atomic warhead section.

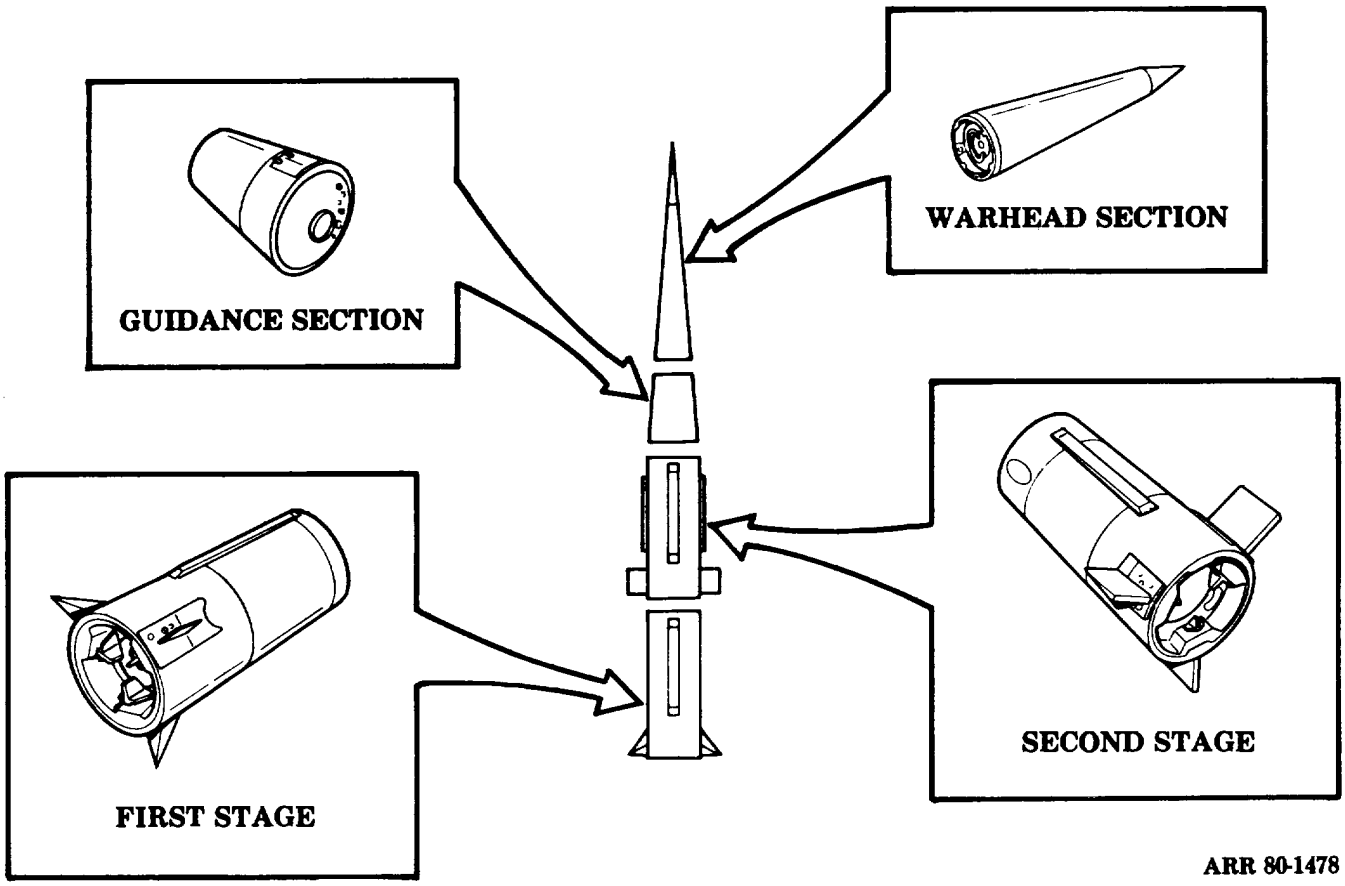

Figure 8-13. Pershing missile sections.

b. Missile Sections.

(1) First and second stages (fig 8-14).

(a) Propellant. The first and second stages contain solid propellant grain. A circular hole running lengthwise through the grain allows the propellant to burn evenly. The propellant weighs 4451 pounds in the first stage and 2875 pounds in the second stage. The igniter, located in the forward end of the motor, is ignited by electrical signals to two explosive initiators in the forward end of the igniter. The propellant, in turn, is ignited by the igniter.

(b) Actuators. Three hydraulic actuators, near the rear of the first and second stages, are equally spaced around the motor nozzles. Air vanes extend into the blast area of the nozzles, and an air vane extends outward from each hydraulic activator. An adapter is attached to the forward end of each propulsion section to facilitate the connection of the stages. The forward adapter for the second stage also contains three impulse control ports.

(c) Ports. The ports open at warhead section separation so that the second stage thrust is neutralized. The ports are opened by electrical detonation of an explosive sector in the retaining ring that attaches the cover on each port.

(d) Shaped charges. Two shaped charges, on opposite sides of the second stage, detonate shortly after warhead section separation. When the shaped charges detonate, they rupture the case wall of the second stage, releasing the internal pressure, which reduces the size of the plume from the thrust reversal ports. This reduces the turbulence and enables stable flight of the warhead section after separation.

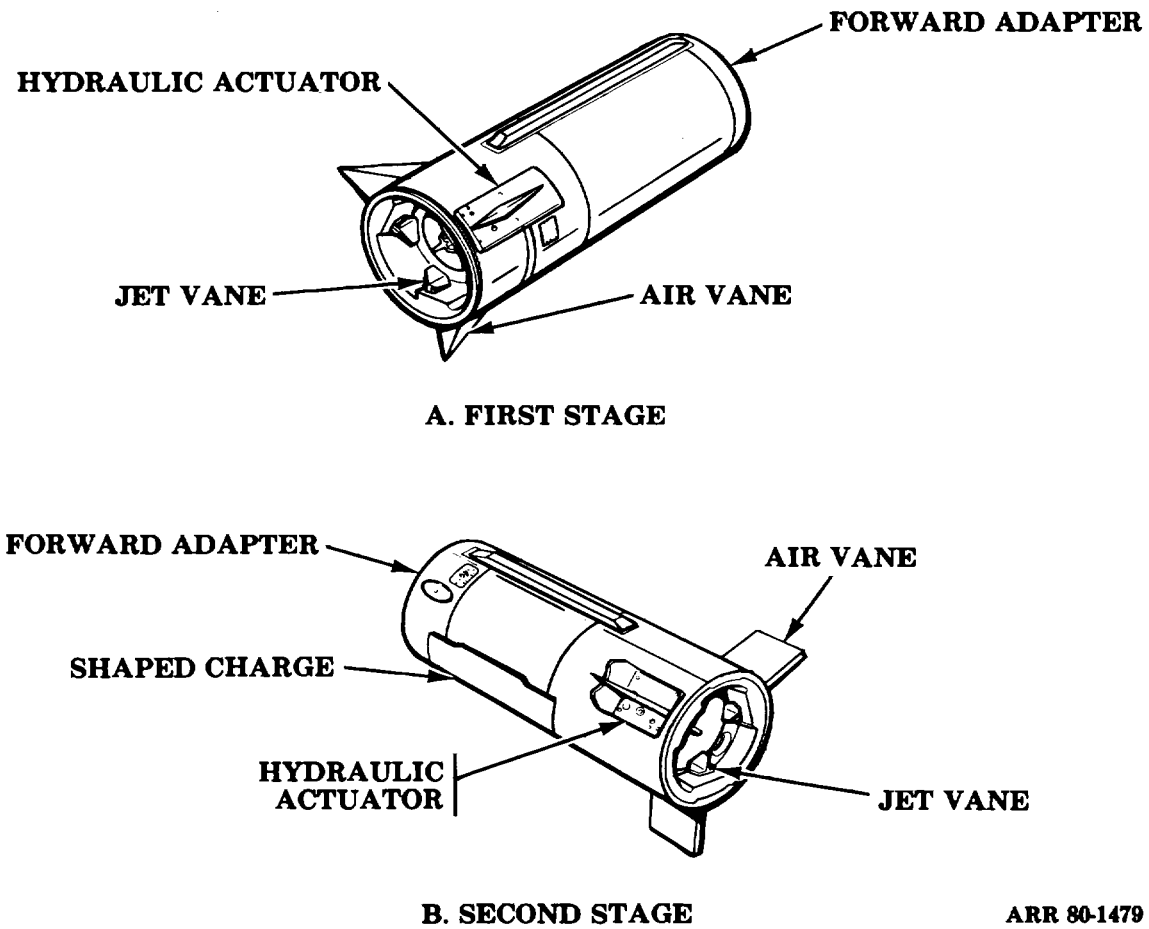

Figure 8-14. First and second stages.

(2) ANIDJW-49 guidance section. The guidance section (fig 8-15) contains the electrical and electronic assemblies that control the trajectory of the missile.

(a) Components. The major components of the guidance section are the ST-120 stabilized platform, the servoamplifier, the guidance and control computer (G&CC), the main distributor, the power distribution system, and power supplies. Other components are an air bottle, a high-pressure air distribution system, and safety relays for discontinuing a countdown, if necessary, after ground power has been removed.

1. ST-120 stabilized platform. The ST-120 stabilized platform provides missile attitude and velocity information from which the G&CC computes deviations from the programmed trajectory.

2. Servoamplifier. The servoamplifier works with the ST-120 stabilized platform to create a stable reference from which the trajectory deviations are obtained.

3. Guidance and control computer (G&CC). The G&CC combines the guidance data with the missile attitude reference data from the ST-120 stabilized platform to create the combined control signals that operate the hydraulic adapters.

4. Power supplies. The primary power supplies consist of the missile battery and a static inverter.

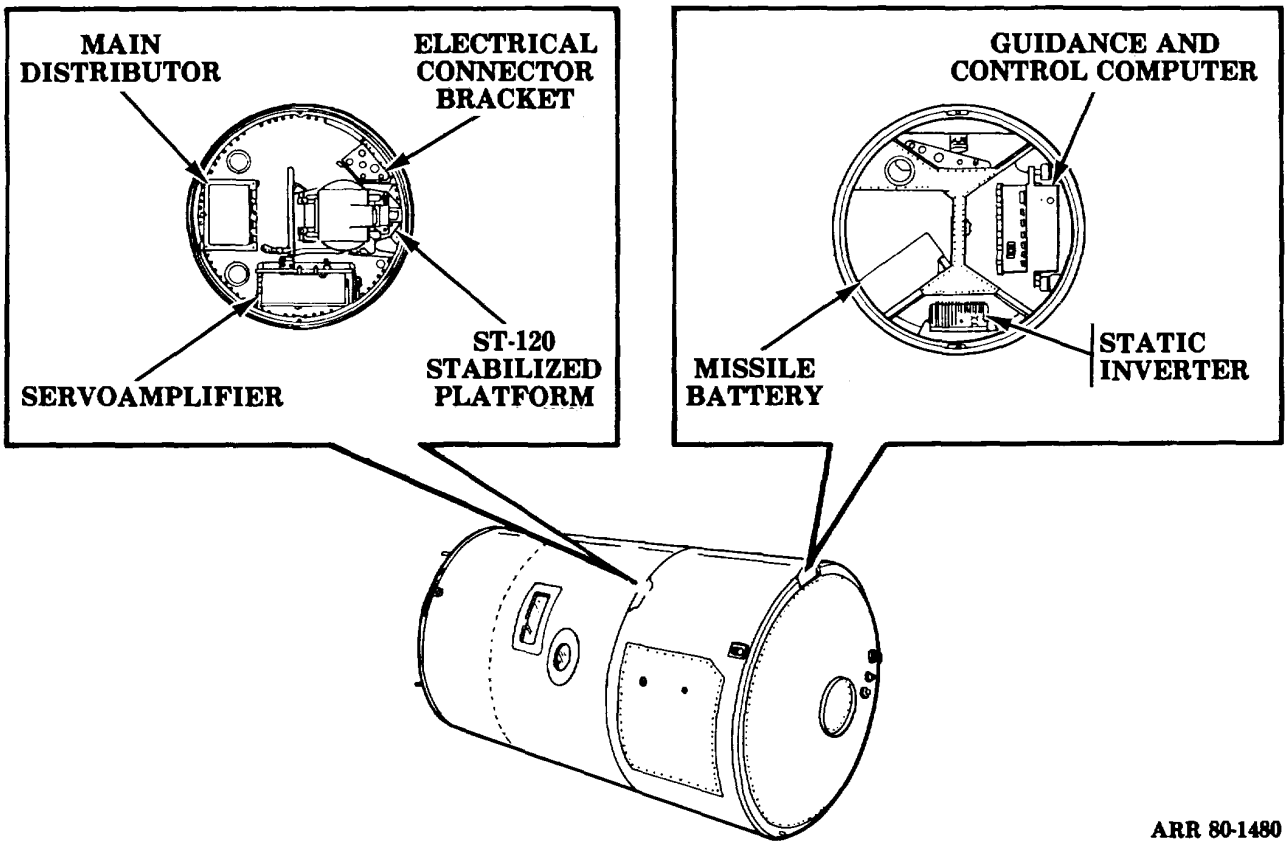

Figure 8-15. Guidance section.

(b) Operation (fig 8-16). The guidance system detects errors in the missile trajectory, as compared to the predetermined flight path, and converts these errors into guidance signals. The G&CC combines the guidance signals with the attitude signals to generate a corrective signal for transmission to the hydraulic actuators. The guidance system continuously monitors the actual velocity and displacement of the missile, compares the actual data with the preset information, and calculates the exact instant for second-stage cutoff and warhead section separation. After warhead section separation, no further control, other than spin stabilization, is necessary to deliver the warhead section within the normal dispersion limits associated with the required circular error probability (CPE).

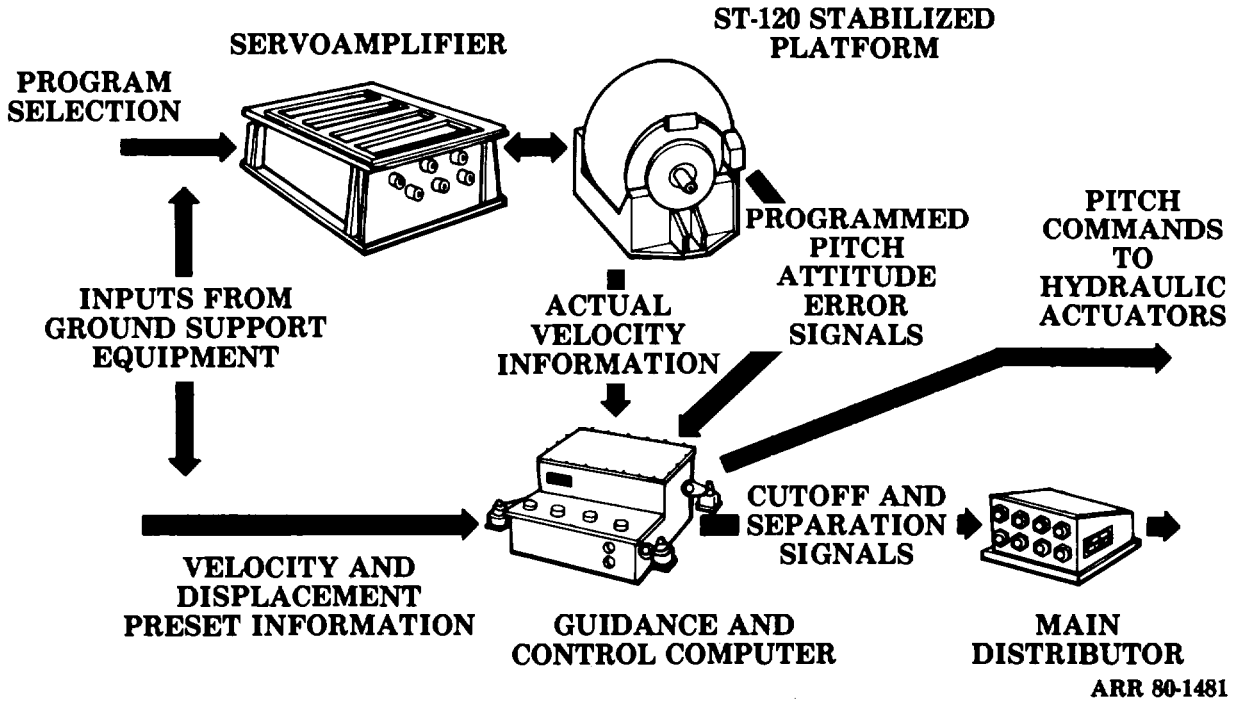

Figure 8-16. Operation of guidance section.

(3) Warhead section. The warhead section (fig 8-17) contains the nuclear warhead, the warhead spin system, and an adapter kit. The spin system consists of a gas generator connected to nozzles that release gases to impart spin to the warhead. The main components of the adapter kit are the arming and detonating fuzes and the thermal batteries. The warhead structure is covered with a coating that maintains the temperature of the warhead within operating limits during reentry.

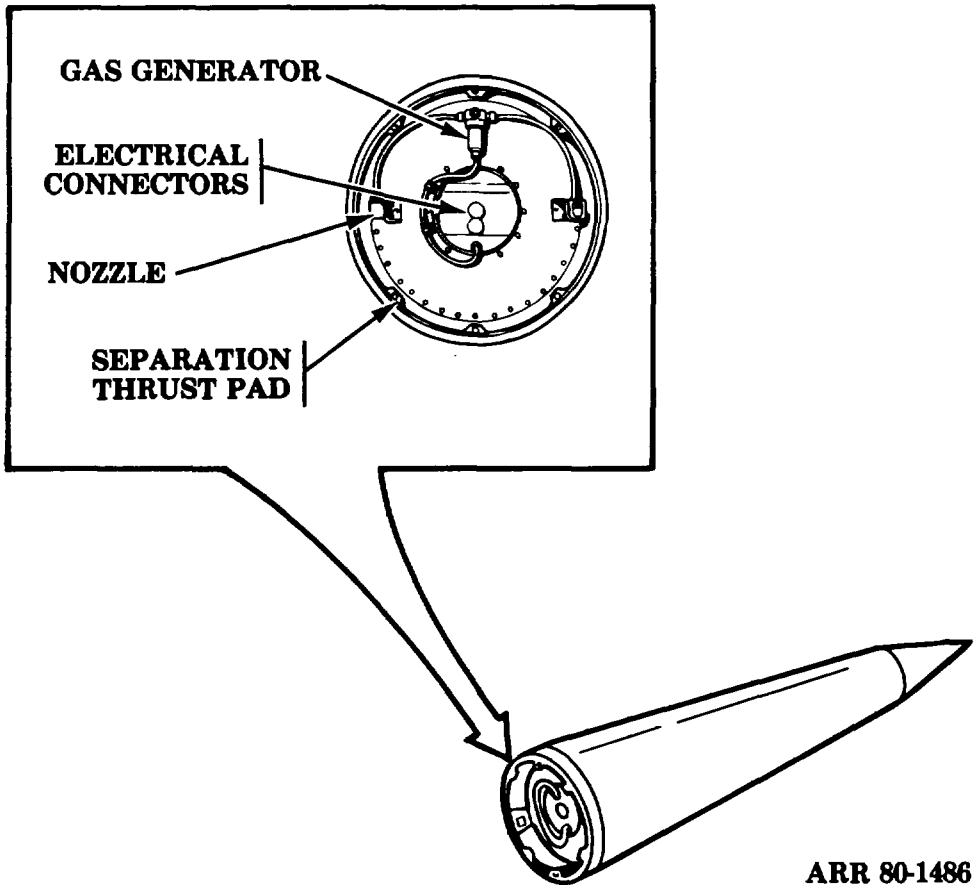

Figure 8-17. Warhead section.

APPENDIX

REFERENCES

The following publications pertain to the material covered in this manual.

DA PAM 310-4.....Index of Technical Manuals, Technical Bulletins, Supply Manuals (Types 7, 8, and 9), Supply Bulletins, and Lubrication Orders

TM 43-0001-28.....Army Ammunition Data Sheets for Artillery Ammunition: Guns, Howitzers, Mortars, Recoilless Rifles, and Grenade Launchers

TM 9-1015-203-12.....Operator/Crew and Organizational Maintenance Manual for Howitzer, Light, Towed: 105-MM, M101 (1015-00-322-9728) and 105-MM, MlOlA1 (1015.00.322-9752)

TM 9-1015-234-12.....Operator and Organizational Maintenance Manual: Howitzer, Light, Towed: 105-MM, M102 (1015.00-086-8164)

TM 9-1025-200-12.....Operator and Organizational Maintenance Manual for Howitzer, Medium, Towed: 155-MM, M114 and M114A1/ M114A2

TM 9-1025-211-10.....Operator's Manual: Howitzer, Medium, Towed: 155-MM, M198

TM9-142-380-10-1 .....Operator's Manual: Description of the Pershing 1A Field Artillery Missile System

TM9-1425-380-10-2 .....Operator's Manual: Description of the Pershing 1A Field Artillery Missile System (classified supplement)

TM9-1425-485-10-1 .....System Description for Lance Guided Missile System

TM 9-1425-485-10-2 .....Operator's Manual: Lance Guided Missile System

TM 9-2300-216-10 .....Operator's Manual for Gun, Self-Propelled: 175MM, M107 (2350.00.4366635) and Howitzer, Heavy, Self-Propelled: 8Inch, M110 (2350-00-4396243) and Ml1OA1

TM 9-230-217-ON.....Operation and Maintenance Manual: (Crew) Howitzer, Medium, Self-Propelled: 155-MM, M109 (2350-00-440-8811) and 155-MM, M109A1 (2350-00-485-9662) and 109A3

TM 9-2350-303-10 .....Operator's Manual for Howitzer, Medium, Self-Propelled: 155-MM, M109A2 (2350-01-0310568)

TM9-2350-304-10 .....Operator's Manual for Howitzer, Heavy, Self-Propelled, 8-inch, Ml11OA2 (2350-01-0414590)

ALPHABETICAL INDEX

Subject — Page

A

AN/DJW-49 guidance section 8-11

Artillery, development of US cannon:
- During World War II 2-7
- Early 2-5
- Since the Korean conflict 2-17

Artillery using gunpowder, primitive 2-1

Assemblage, M5 or M6 missile main 8-4

Auxiliary items of barrel assembly:
- Bore evacuator 4-6
- Muzzle brake 4-7

Axle 7-16

B

Barrel assembly:
- Auxiliary items 4-6
- Definitions 4-1
- Monobloc tube construction 4-2
- Mountings 4-3
- Rifling 4-2

Barrel assembly mountings:
- Central bore 4-3
- Cradle and sleigh 4-5
- Recoil slide rail 4-4

Basic launch fixture 8-6

Bore evacuator 4-6

Bottom carriage 7-2

Box trail 7-21

Brake:
- Muzzle 4-7
- Recoil (See Recoil brake)

Brakes:
- Parking 7-25
- Service 7-26

Breech mechanism:
- Breech operating mechanism 4-10
- Breechblock 4-8
- Firing mechanism 4-15
- General 4-8
- Obturator 4-21

Breech operating mechanism:
- Carrier 4-10
- Sliding-wedge 4-13

Breechblock:
- Interrupted-screw 4-8
- Sliding-wedge 4-9

Breech-loading cannons 2-4

Buffer, counterrecoil (See Counterrecoil buffer)

C

Caliber 4-2

Cannon:
- Components of 4-1
- Definition of 4-1

Cannon artillery, development of US:
- During World War II 2-7
- Early 2-5
- Since the Korean conflict 2-17

Cannon support components:
- Bottom carriage 7-2
- Cradle 7-2
- Sleigh 7-2
- Top carriage 7-2

Cannons:
- Breech-loading 2-4
- Rifled 2-3
- Smoothbore 2-1

Cannon-type weapons:
- Current 3-1
- Definition of 3-1

Carriage: 7-2
- Bottom 7-2
- Top 7-2

Carriage and mount, definition of 7-1

Carriage traversing-type traversing mechanism 7-14

Carriage-mounted pull-type spring equilibrator 7-5

Carriages and mounts, early development of 2-2

Subject Page

Carrier breech operating mechanism 4-10

Central bore mounting 4-3

Continuous-pull firing mechanism 4-15

Control surfaces, M29 and M30 8-5

Counterrecoil buffer:
- Dash pot 6-8
- Hydraulic spring 6-8
- Respirator or Schindler 6-10

Counterrecoil mechanism:
- Dependent 6-5
- Independent 6-6
- Piston-type Hydropneumatic recuperator 6-7

Cradle 7-2
Cradle and sleigh mounting 4-5
Cylinder-type elevating mechanism, hydraulic 7-12

D

Dash pot counterrecoil buffer 6-8

DeBange obturator 4-21

Dependent counterrecoil mechanism 6-5

Development during World War II of US cannon artillery 2-7

Development of rockets and guided missiles:
- Early 2-21
- Since World War II 2-22

Development of US cannon artillery:
- During World War II 2-7
- Early 2-5
- Since the Korean conflict 2-17

Development since the Korean conflict of US cannon artillery 2-17

Development since World War II of rockets and guided missiles 2-22

Devices, hand loading and ramming 5-1

E

Early development of rockets and guided missiles 2-21

Subject Page

Early development of US cannon artillery 2-5

Elevating mechanism:
- General 7-10
- Manually operated 7-10
- Power operated 7-12

Elevating rack and pinion-type elevating mechanism 7-10

Equalizer 7-17

Equilibrator:
- General 7-3
- Hydropneumatic 7-8
- Pneumatic 7-6
- Spring 7-4

Evacuator, bore 4-6

F

Firing jack 7-18

Firing mechanism:
- Continuous-pull 4-15
- Inertia 4-18
- Percussion-hammer 4-20

Firing platform 7-18

Firing support:
- Firing jack 7-18
- Firing platform 7-18
- General 7-17

First and second stages 8-10

G

Gear-type traversing mechanism, ring 7-15

Grooves, throttling 6-2

Grooves, throttling, variable recoil 6-4

Guidance section, AN/DJW-49 8-11

Guided missile system:
- Lance 8-1
- Pershing 8-8

Guided missiles:
- Current 3-6
- Definition of 3-1

Subject Page

Guided missiles:-continued
Development of:
Early 2-21
Since World War II 2-22
Lance 8-2
Pershing 8-9

Gunpowder, invention of 2-1

Gunpowder, primitive artillery using 2-1

H

Hand loading and ramming devices 5-1

Hydraulic cylinder-type elevating mechanism 7-12

Hydraulic motor rack and pinion-type elevating mechanism 7-12

Hydraulic spring counterrecoil buffer 6-8

Hydropneumatic recuperator, piston-type 6-7

Hydropneumatic spring equilibrator 7-8

I

Independent counterrecoil mechanism 6-6

Inertia firing mechanism 4-18

Interrupted-screw breechblock 4-8

Invention of gunpowder 2-1

J

Jack, firing 7-18

K

Kit, M234 mobility 8-7

L

Lance guided missile system:
Components 8-1
Description 8-1
Lance missile:
Components 8-3
Trajectory 8-2
Launchers and launcher equipment 8-6

Lance missile:
M251 warhead section 8-3

Subject Page

Lance missile:--continued
M29 and M30 control surfaces 8-5
M5 or M6 missile main assemblage 8-4

Launch fixture, basic 8-6

Launcher:
M752 self-propelled launcher 8-6
Zero-length launcher 8-6

Launcher equipment:
Basic launch fixture 8-6
M234 mobility kit 8-7

Loader and rammer mechanism 5-3

Loading and ramming devices, hand 5-1

Lunette 7-22

LZL 8-6

M

Main assemblage, M5 or M6 missile 8-4

Manually operated elevating mechanism:
Elevating rack and pinion-type 7-10
Elevating screw-type 7-10

Manually operated traversing mechanisms:
Carriage traversing-type 7-14
Pintle-type 7-13

Missile:
Lance 8-2
Pershing 8-9

Missile main assemblage, M5 or M6 8-4

Missile sections (Pershing):
AN/DJW-49 guidance section 8-11
First and second stages 8-10
Warhead section 8-13

Missiles (See Guided missiles)

Mobility kit, M234 8-7

Monobloc tube construction 4-2

Motor rack and pinion-type elevating mechanism, hydraulic 7-12

Subject Page

Mount, definition of 7-1

Mountings, barrel assembly (See Barrel assembly mountings)

Mounts, early development of 2-2

Muzzle brake 4-7

M234 mobility kit 8-7

M251 warhead section 8-3

M29 and M30 control surfaces 8-5

M5 or M6 missile main assemblage 8-4

M752 self-propelled launcher 8-6

N

Nitrogen gas-type replenisher 6-11

0

Obturator 4-21

P

Parking brakes 7-25

Percussion-hammer firing mechanism 4-20

Pershing guided missile system:
- Components 8-8
- Description 8-8
- XMGM-31A Pershing missile 8-9

Pershing missile sections (See Missile sections (Pershing))

Pershing missile, XMGM-31A:
- Description 8-9
- Missile sections 8-10

Pintle 7-22

Pintle-type traversing mechanism:
- Rack and pinion-type 7-14
- Screw-type 7-13

Piston-type Hydropneumatic recuperator 6-7

Platform, firing 7-18

Pneumatic spring equilibrator 7-6

Subject Page

Power loading and ramming mechanism:
- General 5-2
- Loader and rammer mechanism 5-3
- Rammer mechanism 5-7

Power operated elevating mechanism:
- Hydraulic cylinder-type 7-12
- Hydraulic motor rack and pinion-type 7-12

Power operated traversing mechanism (ring gear-type) 7-15

Pregunpowder era 2-1

Primitive artillery using gunpowder 2-1

Pull-type spring equilibrator 7-4

Pull-type spring equilibrator, carriage-mounted 7-5

Pusher-type spring equilibrator 7-5

R

Rack and pinion-type elevating mechanism:
- Elevating 7-10
- Hydraulic motor 7-12

Rack and pinion-type pintle-type traversing mechanism 7-14

Rammer and loader mechanism 5-3

Rammer mechanism 5-7

Ramming devices 5-1

Recoil brake:
- Throttling grooves 6-2
- Throttling rod 6-3
- Variable recoil throttling rod and throttling grooves 6-4

Recoil mechanism:
- Counterrecoil buffer 6-8
- Counterrecoil mechanism 6-5
- Definitions 6-1
- Purpose 6-1
- Recoil brake 6-2
- Replenisher 6-10

Subject	Page
Recoil slide rail mounting	4-4
Recuperator, piston-type hydro-pneumatic	6-7
Replenisher:	
Nitrogen gas-type	6-11
Spring-type	6-10
Respirator	6-10
Retractable suspension system	7-19
Rifled cannons	2-3
Rifling	4-2
Ring gear-type traversing mechanism	7-15
Rockets and guided missiles, definition of	3-1
Rockets, development of:	
Early	2-21
Since World War II	2-22
Rod, throttling	6-3
Rod, throttling, variable recoil	6-4
S	
Schindler counterrecoil buffer	6-10
Scope	1-1
Screw-type elevating mechanism, elevating	7-10
Screw-type pintle-type traversing mechanism	7-13
Self-propelled launcher, M752	8-6
Service brakes	7-26
Shields	7-24
Sleigh	7-2
Sliding-wedge breech operating mechanism	4-13
Sliding-wedge breechblock	4-9
Smoothbore cannons	2-1
Spade	7-23
Split trail	7-20
Spring counterrecoil buffer, hydraulic	6-8
Spring equilibrator:	
Carriage-mounted pull-type	7-5
Spring equilibrator:-continued	
Hydropneumatic	7-8
Pneumatic	7-6
Pull-type	7-4
Pusher-type	7-5
Spring-type replenisher	6-10
Stages, first and second	8-10
Support, firing (See Firing support)	
Surfaces, M29 and M30 control	8-5
Suspension system, retractable	7-19
T	
Throttling grooves	6-2
Throttling rod	6-3
Throttling rod and throttling grooves, variable recoil	6-4
Top carriage	7-2
Trail:	
Box	7-21
Split	7-20
Trajectory (Lance)	8-2
Traversing mechanism:	
General	7-13
Manually operated	7-13
Power operated (ring gear-type)	7-15
Tube construction, monobloc	4-2
U	
US cannon artillery, development of:	
During World War II	2-7
Early	2-5
Since the Korean conflict	2-17

Subject Page

V

Variable recoil throttling rod and throttling grooves 6-4

W

Warhead section:
M251 (Lance)..... 8-3
(Pershing) 8-13

X

XMGM-31A Pershing missile (See Pershing missile, XMGM-31A)

Z

Zero-length launcher 8-6

By Order of the Secretary of the Army:

E. C. MEYER
General, United States Army
Chief of Staff

Official:

J. C. PENNINGTON
Major General, United States Army
The Adjutant General

Distribution:

To be distributed in accordance with Special Mailing List.

*U.S. GOVERNMENT PRINTING OFFICE: 1995 - 388-421/00358I

TEAR ALONG PERFORATED LINE

RECOMMENDED CHANGES TO EQUIPMENT TECHNICAL PUBLICATIONS

THEN. . JOT DOWN THE DOPE ABOUT IT ON THIS FORM, CAREFULLY TEAR IT OUT, FOLD IT AND DROP IT IN THE MAIL!

SOMETHING WRONG WITH THIS PUBLICATION?

FROM: (PRINT YOUR UNIT'S COMPLETE ADDRESS)

DATE SENT

PUBLICATION NUMBER	PUBLICATION DATE	PUBLICATION TITLE

BE EXACT. . .PIN-POINT WHERE IT IS

PAGE NO.	PARA-GRAPH	FIGURE NO	TABLE NO.	IN THIS SPACE TELL WHAT IS WRONG AND WHAT SHOULD BE DONE ABOUT IT:

PRINTED NAME, GRADE OR TITLE, AND TELEPHONE NUMBER	SIGN HERE:

DA FORM 1 JUL 79 2028-2

PREVIOUS EDITIONS ARE OBSOLETE.

P.S.—IF YOUR OUTFIT WANTS TO KNOW ABOUT YOUR RECOMMENDATION MAKE A CARBON COPY OF THIS AND GIVE IT TO YOUR HEADQUARTERS.

THE METRIC SYSTEM AND EQUIVALENTS

'NEAR MEASURE

. Centimeter = 10 Millimeters = 0.01 Meters = 0.3937 Inches
1 Meter = 100 Centimeters = 1000 Millimeters = 39.37 Inches
1 Kilometer = 1000 Meters = 0.621 Miles

'VEIGHTS

Gram = 0.001 Kilograms = 1000 Milligrams = 0.035 Ounces
1 Kilogram = 1000 Grams = 2.2 lb.
1 Metric Ton = 1000 Kilograms = 1 Megagram = 1.1 Short Tons

LIQUID MEASURE

1 Milliliter = 0.001 Liters = 0.0338 Fluid Ounces
1 Liter = 1000 Milliliters = 33.82 Fluid Ounces

SQUARE MEASURE

1 Sq. Centimeter = 100 Sq. Millimeters = 0.155 Sq. Inches
1 Sq. Meter = 10,000 Sq. Centimeters = 10.76 Sq. Feet
1 Sq. Kilometer = 1,000,000 Sq. Meters = 0.386 Sq. Miles

CUBIC MEASURE

1 Cu. Centimeter = 1000 Cu. Millimeters = 0.06 Cu. Inches
1 Cu. Meter = 1,000,000 Cu. Centimeters = 35.31 Cu. Feet

TEMPERATURE

5/9(°F - 32) = °C
212° Fahrenheit is evuivalent to 100° Celsius
90° Fahrenheit is equivalent to 32.2° Celsius
32° Fahrenheit is equivalent to 0° Celsius
9/5C° + 32 =°F

APPROXIMATE CONVERSION FACTORS

TO CHANGE	TO	MULTIPLY BY
Inches	Centimeters	2.540
Feet	Meters	0.305
Yards	Meters	0.914
Miles	Kilometers	1.609
Square Inches	Square Centimeters	6.451
Square Feet	Square Meters	0.093
Square Yards	Square Meters	0.836
Square Miles	Square Kilometers	2.590
Acres	Square Hectometers	0.405
Cubic Feet	Cubic Meters	0.028
Cubic Yards	Cubic Meters	0.765
Fluid Ounces	Milliliters	29.573
ıts	Liters	0.473
arts	Liters	0.946
allons	Liters	3.785
Ounces	Grams	28.349
Pounds	Kilograms	0.454
Short Tons	Metric Tons	0.907
Pound-Feet	Newton-Meters	1.356
Pounds per Square Inch	Kilopascals	6.895
Miles per Gallon	Kilometers per Liter	0.425
Miles per Hour	Kilometers per Hour	1.609

TO CHANGE	TO	MULTIPLY BY
Centimeters	Inches	0.394
Meters	Feet	3.280
Meters	Yards	1.094
Kilometers	Miles	0.621
Square Centimeters	Square Inches	0.155
Square Meters	Square Feet	10.764
Square Meters	Square Yards	1.196
Square Kilometers	Square Miles	0.386
Square Hectometers	Acres	2.471
Cubic Meters	Cubic Feet	35.315
Cubic Meters	Cubic Yards	1.308
Milliliters	Fluid Ounces	0.034
Liters	Pints	2.113
Liters	Quarts	1.057
'ers	Gallons	0.264
.ms	Ounces	0.035
.ograms	Pounds	2.205
Metric Tons	Short Tons	1.102
Newton-Meters	Pounds-Feet	0.738
Kilopascals	Pounds per Square Inch	0.145
'lometers per Liter	Miles per Gallon	2.354
›meters per Hour	Miles per Hour	0.621

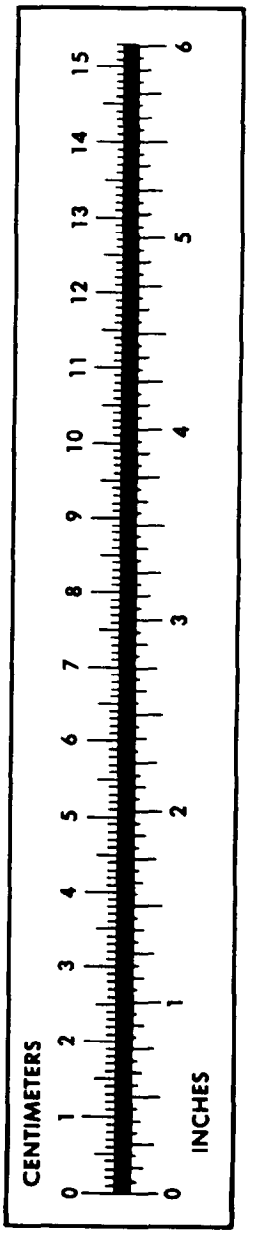

PIN: 048891-000