TECHNICAL MANUAL

OPERATOR'S, ORGANIZATIONAL, DIRECT SUPPORT, AND GENERAL SUPPORT MAINTENANCE MANUAL

THEODOLITE, SURVEYING, DIRECTIONAL, ONE MINUTE (WILD-HEERBRUGG MODEL T16-75DEG) NSN 6675-01-075-3278

HEADQUARTERS, DEPARTMENT OF THE ARMY
20 JUNE 1980

CHANGE

NO. 1

HEADQUARTERS
DEPARTMENT OF THE ARMY
WASHINGTON, D.C., 18 MAY 1992

Operator's, Organizational,
Direct Support, and General Support
Maintenance Manual

Theodolite, Surveying, Directional,
One Minute
(Wild-Heerbrugg Model T16-75DEG)
NSN 6675-014-075-3278
Theodolite, Surveying, Directional,
0.2 Mil
(Wild-Heerbrugg Model T16-84MIL)
NSN 6675-01-191-4777

Approved for public release; distribution is unlimited

TM 5-6675-312-14, dated 20 June 1980, is changed as follows:

1. Title is changed as shown above.
2. Remove and insert pages as indicated below. New or changed text material is indicated by a vertical bar in the margin. An illustration change is indicated by a miniature pointing hand.

Remove pages	Insert pages
i and ii	i and ii
1-1 and 1-2	1-1 and 1-2
1-11 and 1-12	1-11 and 1-12
2-1 and 2-2	2-1 and 2-2
2-13 and 2-14	2-13 and 2-14
2-43 and 2-44	2-43 and 2-44
B-1 through B-5/(B-6 blank)	B-1 through B-5/(B-6 blank)

3. Retain this sheet in front of manual for reference purposes.

By Order of the Secretary of the Army:

GORDON R. SULLIVAN
General, United States Army
Chief of Staff

Official:

MILTON H. HAMILTON
Administrative Assistant to the
Secretary of the Army
01312

DISTRIBUTION:

To be distributed in accordance with DA Form 12-25E, qty rqr block no. 1813.

WARNING

Always notify the battery executive officer before starting operations, so that adequate warning can be given operators prior to a firing exercise. Always notify the chief of any construction project of the survey plans, in order to protect operators against injury from moving equipment and blasting.

WARNING

Severe eye damage can result from performing observations against direct sunlight if the black eyepiece filter is not used.

WARNING

Dry cleaning solvent, P-D-680, used to clean parts is potentially dangerous to personnel and property. Avoid repeated and prolonged contact with skin. Do not use near open flame or excessive heat. Flash point of solvent is 100 °F - 138 °F (38 °C - 59 °C).

TECHNICAL MANUAL

No. 5-6675-312-14

HEADQUARTERS
DEPARTMENT OF THE ARMY
WASHINGTON, D.C., 20 June 1980

OPERATOR'S, ORGANIZATIONAL, DIRECT SUPPORT AND GENERAL SUPPORT MAINTENANCE MANAUAL

THEODOLITE, SURVEYING, DIRECTIONAL, ONE MINUTE (WILD-HEERBRUGG MODEL T16-75DEG) NSN 6675-01-075-3278 THEODOLITE, SURVEYING, DIRECTIONAL, 0.2 MIL (WILD-HEERBRUGG MODEL T16-84 MIL) NSN 6675-01-191-4777

REPORTING ERRORS AND RECOMMENDING IMPROVEMENTS

You can help improve this manual. If you find any mistakes or if you know of a way to improve the procedures, please let us know. Mail your letter, DA Form 2028 (Recommended Changes to Publications and Blank Forms), or DA Form 2028-2 located in the back of this manual direct to: Commander, U.S. Army Troop Support Command, ATTN: AMSTR-MMTS, 4300 Goodfellow Boulevard, St. Louis, MO 63120. A reply will be furnished to you.

Approved for public release; distribution is unlimited.

Table of Contents

Page

CHAPTER 1 INTRODUCTION 1-1

Section I General Information 1-1

Section II Equipment Description and Data 1-2

Section III Technical Principal of Operation 1-12

CHAPTER 2 OPERATING INSTRUCTIONS 2-1

Section I Description and Use of Operator's Controls and Indicators 2-1

Section II Preventive Maintenance Checks and Services 2-7

Section III Operation Under Usual Conditions 2-13

Section IV Operation Under Unusual Conditions 2-42

Page

CHAPTER 3 OPERATOR MAINTENANCE INSTRUCTIONS 3-1

Section I Lubrication Instructions. 3-1

Section II Troubleshooting Procedures 3-1

Section III Maintenance Procedures 3-1

CHAPTER 4 ORGANIZATIONAL MAINTENANCE INSTRUCTIONS 4-1

Section I Repair Parts, Special Tools, TMDE, and Support Equipment 4-1

Section II Service Upon Receipt. 4-1

Section III Preventive Maintenance Checks and Services. 4-2

Section IV Troubleshooting 4-7

Section V Maintenance Procedures. 4-9

Section VI Preparation for Storage and Shipment 4-50

CHAPTER 5 DIRECT SUPPORT MAINTENANCE INSTRUCTIONS 5-1

Section I Repair Parts, Special Tools, TMDE and Support Equipment 5-1

Section II Service Upon Receipt 5-1

Section III Preventive Maintenance Checks and Services. 5-2

Section IV Troubleshooting 5-2

Section V Maintenance Procedures. 5-5

Section VI Preparation for Storage and Shipment. 5-20

CHAPTER 6 GENERAL SUPPORT MAINTENANCE INSTRUCTIONS. 6-1

Section I Repair Parts, Special Tools, TMDE and Support Equipment 6-1

Section II Service Upon Receipt. 6-1

Section III Preventive Maintenance Checks and Services. 6-2

Section IV Troubleshooting 6-2

Section V Maintenance Procedures. 6-2

Section VI Preparation for Storage and Shipment. 6-11

Page

APPENDIX A. REFERENCES A-1

APPENDIX B. COMPONENTS OF END ITEM LIST. B-1

APPENDIX C. MAINTENANCE ALLOCATION CHART C-1

APPENDIX D. ADDITIONAL AUTHORIZATION LIST. D-1

APPENDIX E. EXPENDABLE SUPPLIES AND MATERIALS LIST E-1

ALPHABETICAL INDEX Index-1

CHAPTER 1

INTRODUCTION

Section I. GENERAL INFORMATION

1-1. SCOPE

a. Type of Manual: Operator, Organizational, Direct Support, and General Support Maintenance.

b. Model Number and Equipment Name:

Theodolite, Surveying, Directional, One Minute

(Wild-Heerbrugg Model T16-75DEG)

Theodolite, Surveying, Directional, 0.2 Mil

(Wild-Heerbrugg Model T16-84 Mil)

c. Purpose of Equipment: Surveying and tracking.

1-2. MAINTENANCE FORMS, RECORDS, AND REPORTS Department of the Army forms and procedures used for equipment maintenance will be those prescribed by TM 38-750. The Army Maintenance Management System (TAMMS).

1-3. DESTRUCTION OF ARMY MATERIAL TO PREVENT ENEMY USE To destroy the Theodolite, refer to TM 750-244-3 covering the destruction of Army material to prevent enemy use.

1-4. PREPARATION FOR STORAGE OR SHIPMENT Refer to paragraph 4-26 for information pertaining to the preparation for storage or shipment.

1-5. NOMENCLATURE CROSS-REFERENCE LIST There are no nomenclature cross-references used in this manual.

1-6. REPORTING EQUIPMENT IMPROVEMENT RECOMMENDATIONS (EIR) If your Theodolite needs improvement,

let us know. Send us an EIR. You, the user, are the only one who can tell us what you don't like about your equipment. ‘

Let us know why you don't like the design. Tell us why a procedure is hard to perform. Put it on an SF 368 (Quality Deficiency Report). Mail it to us at: Commander, U.S. Army Troop Support Command, ATTN: AMSTR-MOF, 4300 Goodfellow Boulevard, St. Louis, Mo. 63120. We'll send you a reply.

Section II. EQUIPMENT DESCRIPTION AND DATA

1-7. EQUIPMENT CHARACTERISTICS, CAPABILITIES, AND FEATURES The Theodolite is a precision, directional type surveying and tracking instrument. The Theodolite has both vertical and horizontal circles: Model T16-75 DEG is calibrated in degrees and Model T16-84 MIL is calibrated in mils for reading angle values. The readings are made through the microscope eyepiece. The tribrach assembly supports the main body of the instrument, which is readily detachable from the tribrach assembly. The tribrach assembly contains the footscrew assemblies, circular level, and tribrach locking lever.

a. Characteristics.

- Surveying
- Tracking
- Navigation sightings
- Night or dark day operation
- Portable

b. Capabilities and Features.

- Detachable carrying handle
- Circle reading which provides a large scale interval, bright illumination, and different colors for horizontal (Hz) and vertical (V)
- Automatic index which improves and speeds up vertical angle measurement and provides a red warning screen
- Circle clamp for setting zero, repetition, or carrying bearings.

1-8. LOCATION AND DESCRIPTION OF MAJOR COMPONENTS Figure 1-1 illustrates the major components and general features of the Theodolite. Major items in each illustration are explained by the use of keyed text.

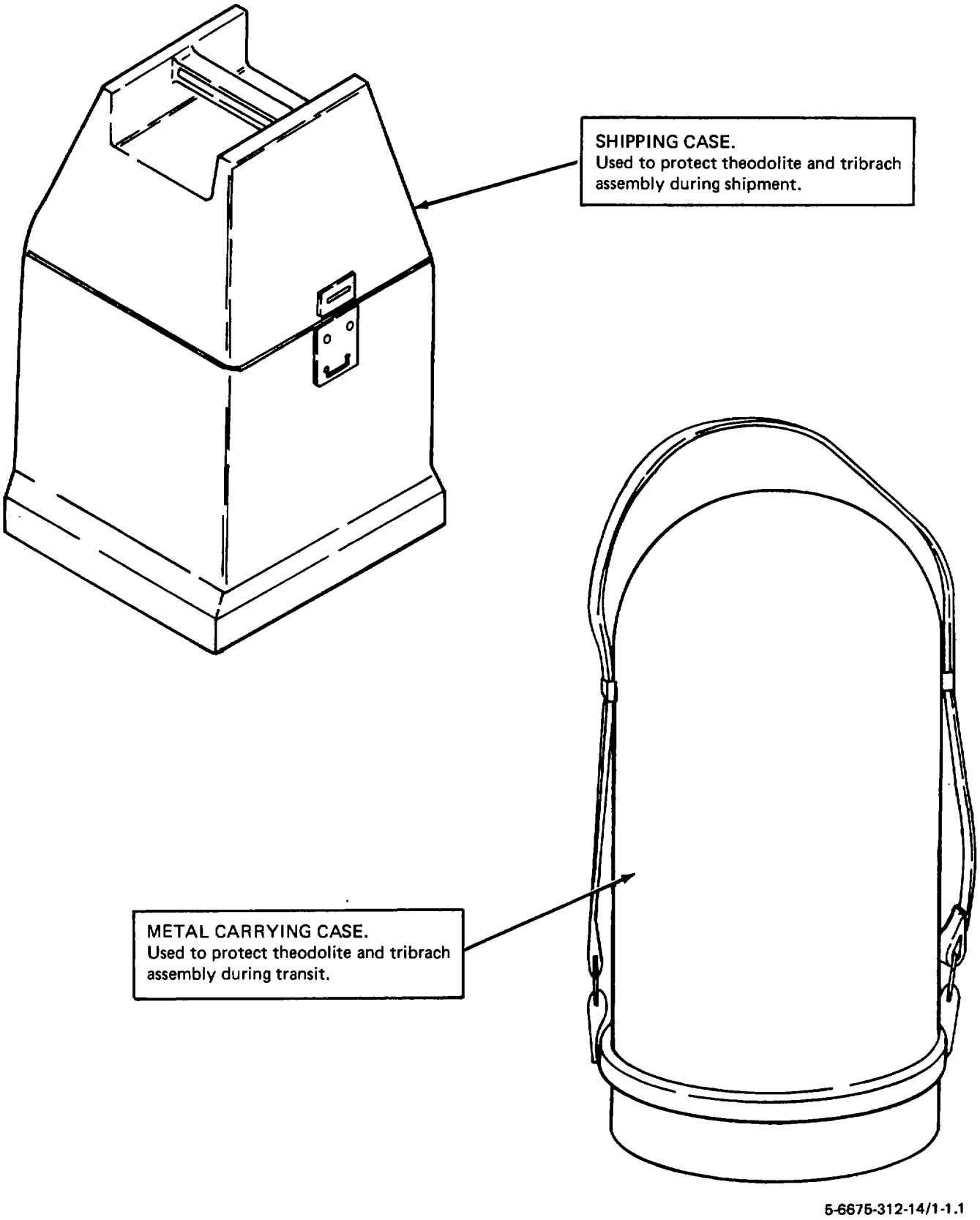

Figure 1-1. Location and description of major components (Sheet 1 of 8)

THEODOLITE AND TRIBRACH ASSEMBLY.
Directional-type surveying and tracking instrument.

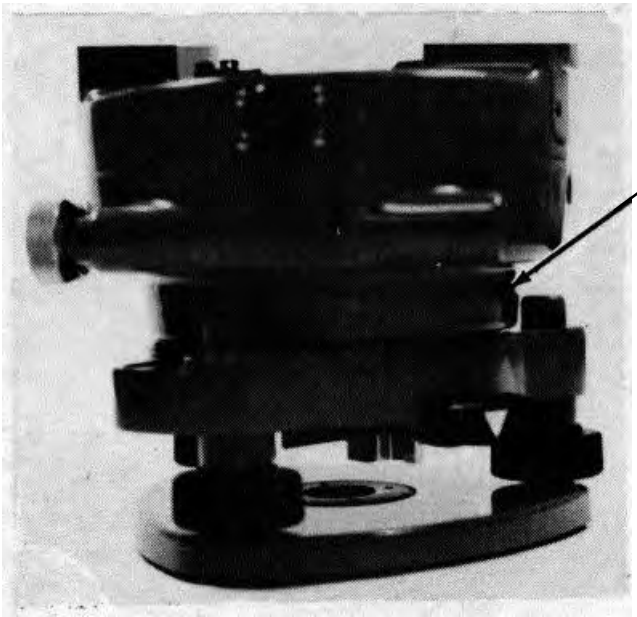

TRIBRACH ASSEMBLY.
Used to mount theodolite on tripod and provides the means for setting the standing vertical axis.

Figure 1-1. Location and description of major components (Sheet 2 of 8)

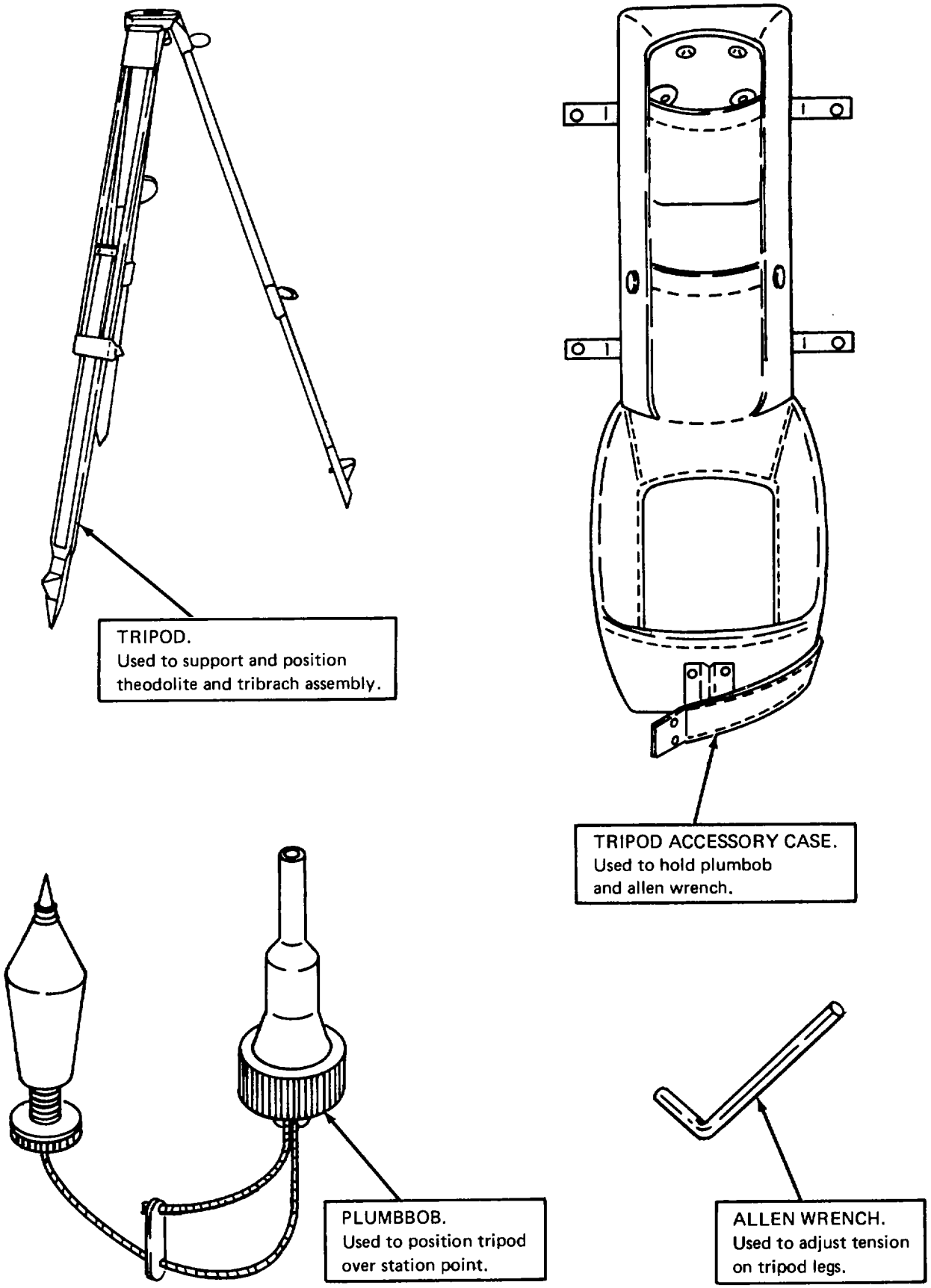

5-6675-312-14/1-1.3

Figure 1-1. Location and description of major components (Sheet 3 of 8)

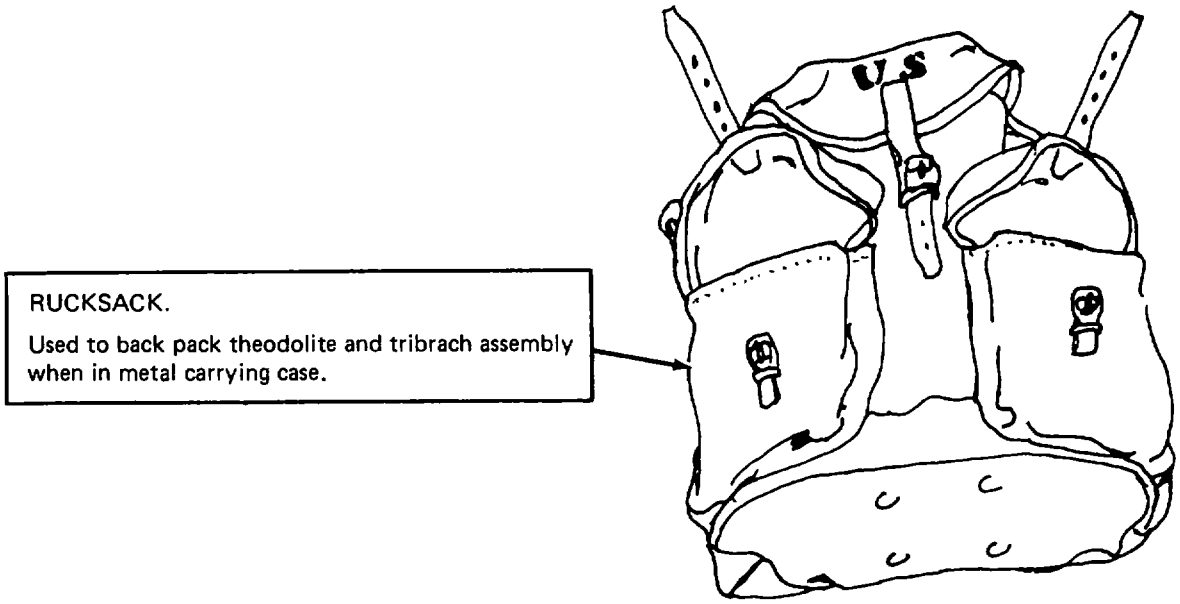

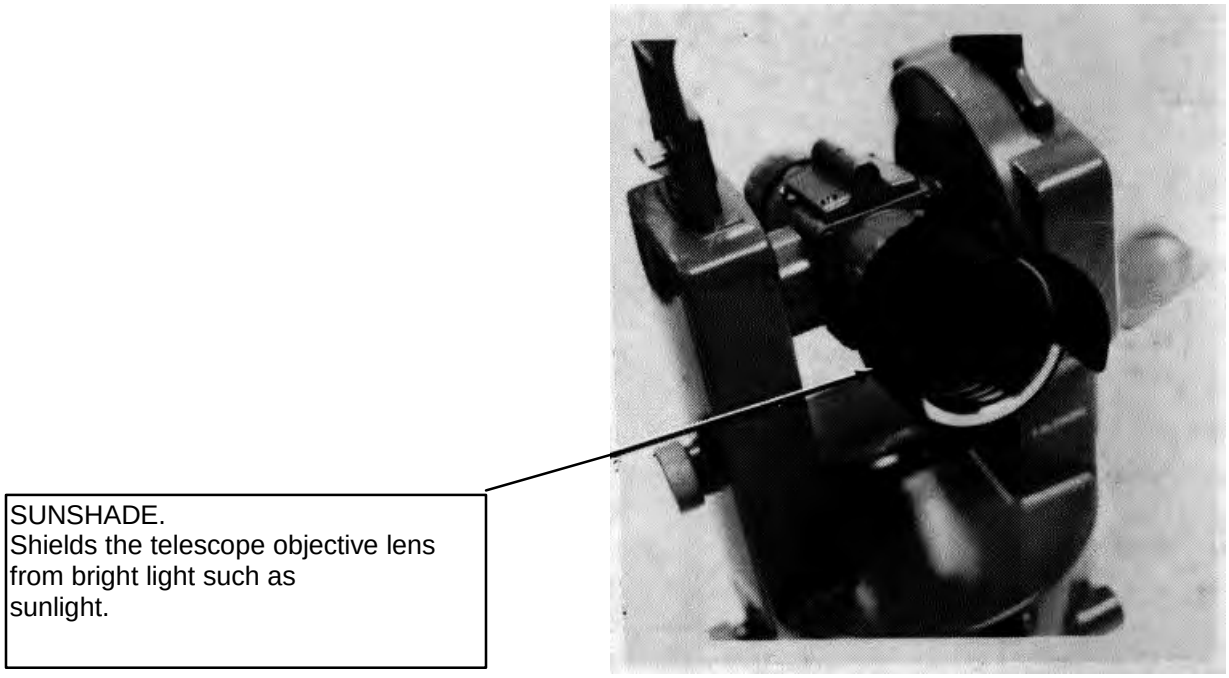

Figure 1-1. Location and description of major components (Sheet 4 of 8)

AUTOCOLLIMATOR EYEPIECE.
Converts the theodolite and tribrach assembly to an autocollimation instrument. Autocollimation is used mainly in optical tooling, industry and laboratories, for alining machine parts and measuring deviations.

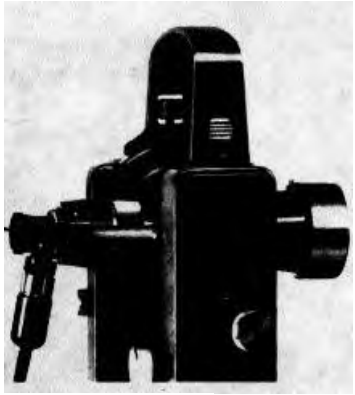

CIRCULAR COMPASS ASSEMBLY.
Used to orient the theodolite horizontal circle to magnetic north.

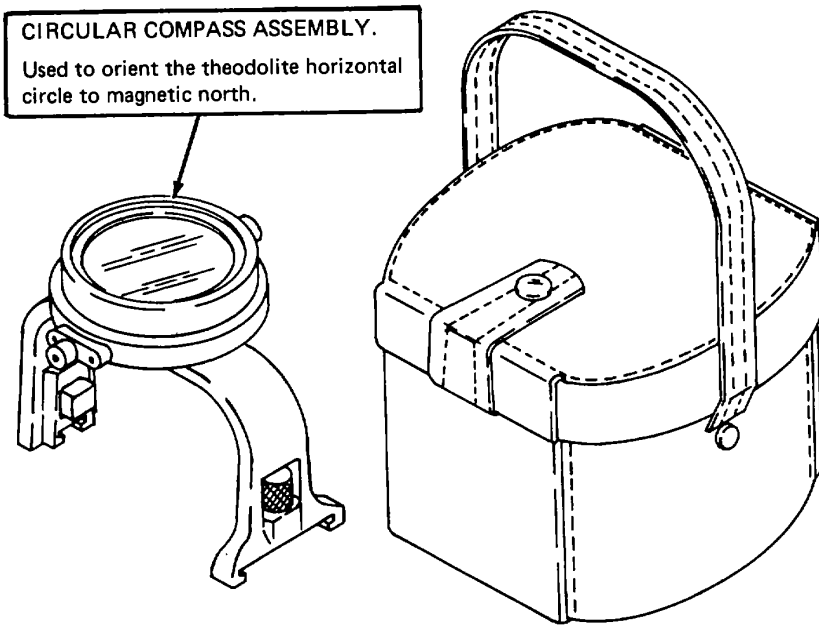

TELESCOPIC LEVEL.
Converts the theodolite and tribrach assembly to a leveling instrument.

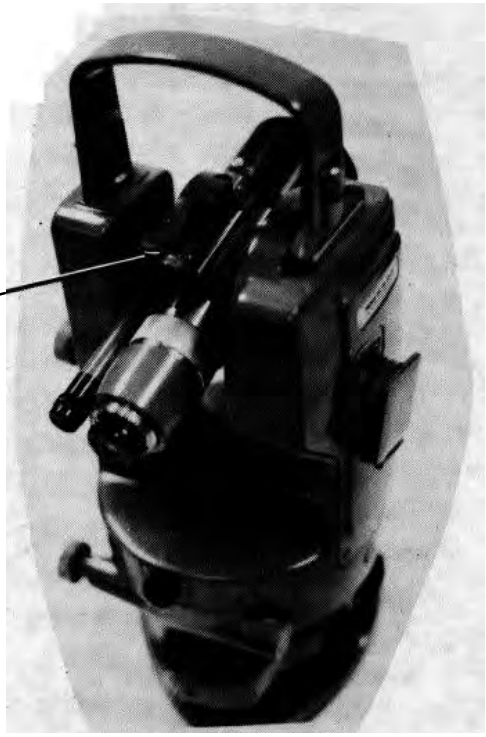

5-6675-312-14/1-1.5

Figure 1-1. Location and description of major components (Sheet 5 of 8)

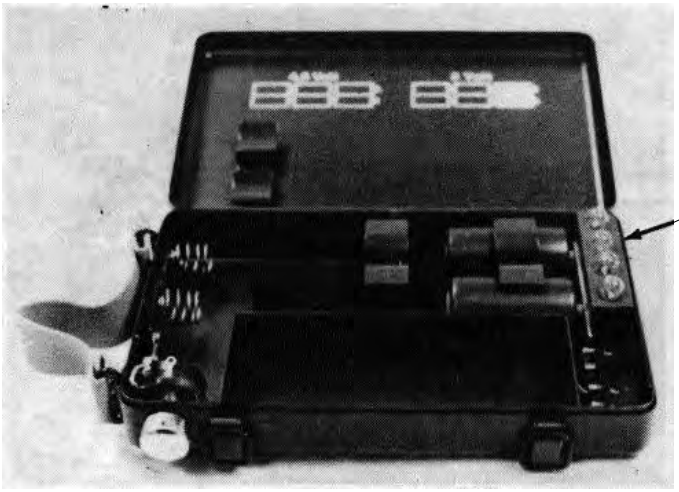

BATTERY BOX ASSEMBLY.
Used when electric illumination is required continuously; such as, at night or underground.

HANDLAMP.
Provide light for operator use.

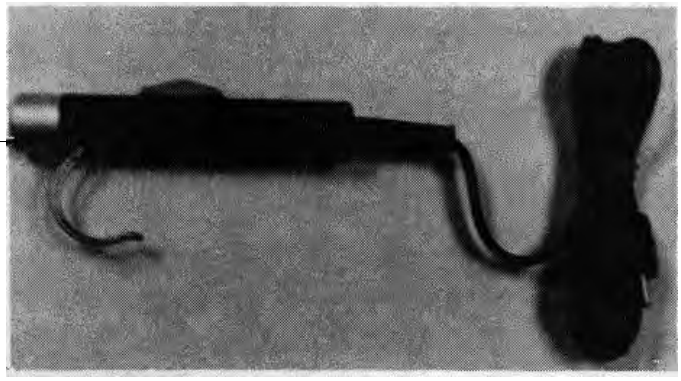

PLUG–IN LAMP.
Used when electric illumination is required.

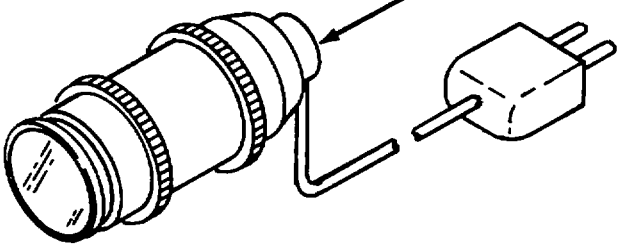

Figure 1-1. Location and description of major components (Sheet 6 of 8)

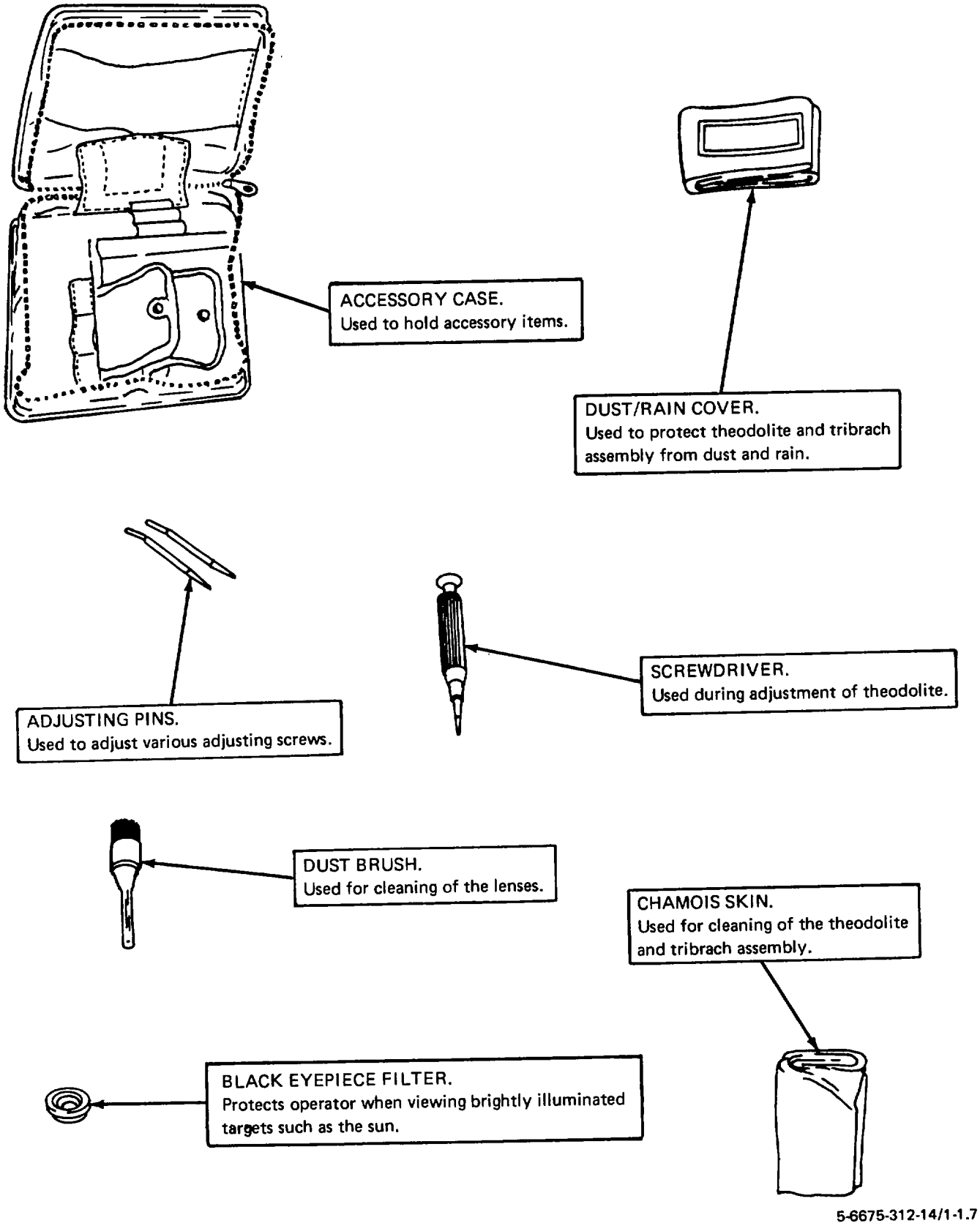

Figure 1-1. Location and description of major components (Sheet 7 of 8)

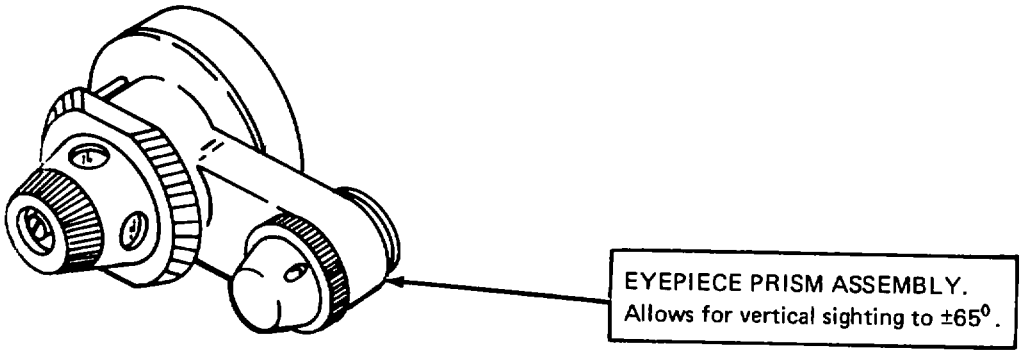

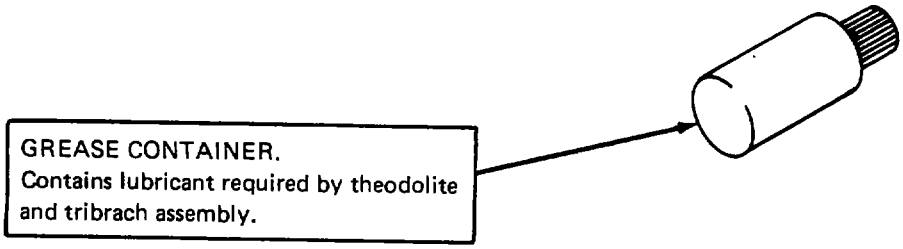

5-6675-312-14/1-1.8

Figure 1-1. Location and description of major components (Sheet 8 of 8)

1-9. DIFFERENCES BETWEEN MODELS This manual is applicable to the Model T16-75DEG Theodolite and the Model T16-84 MIL Theodolite.

1-10. EQUIPMENT DATA

Telescope	Erect image
Magnification with standard eyepiece	30X
Clear objective aperture	1.65 in (42 mm)
Field of view at 1000 ft/1000 m	27 ft/27 m
Shortest focusing distance	5.6 ft (1.7 m)
Multiplication factor	100
Additive constant	0
Bubble sensitivity per 2 mm run	
Circular level	8 minutes (')
Plate level	30 seconds(")
Automatic vertical index	Air damping
Setting accuracy	± 1 second (')
Working range	± 6 minutes (")

Glass circles	3600
Graduation diameter Hz circle	3.7 in (94 mm)
Graduation diameter V circle	3.11 in (79 mm)
Graduation interval of Hz and V circles	1 °
Optical scale interval	1 °
Estimation of interval	0.1 minute (')

1-11. SAFETY, CARE, AND HANDLING

a. Handle the Theodolite carefully. Never subject the unit to bumps, jars, or drops.

b. Return the theodolite and tribrach assembly to the metal carrying case whenever the theodolite and tribrach assembly are to be left unattended for extended periods of time.

c. Never place a damp or wet theodolite and tribrach assembly in the metal carrying case.

d. Handle the metal carrying case with the theodolite and tribrach assembly carefully to avoid sudden jolts, continued vibrations, or other shocks that might damage the delicate parts of the theodolite and tribrach assembly.

e. Do not drop the metal carrying case with the theodolite and tribrach assembly into a vehicle or on the ground.

Section III. TECHNICAL PRINCIPLES OF OPERATION

Figure 1-2 shows the light ray paths through the theodolite.

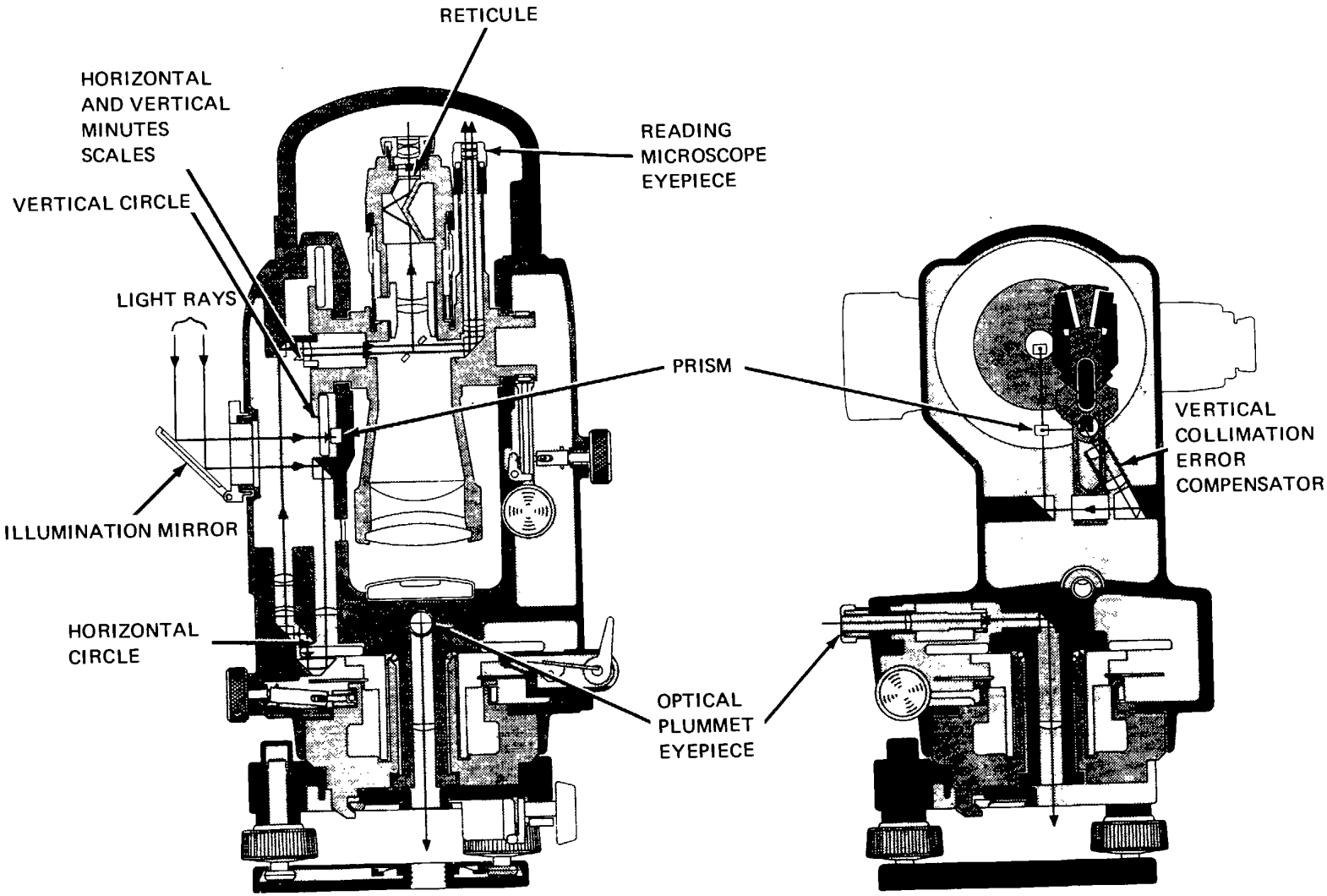

5-6675-312-14/1-2

Figure 1-2. Theodolite cross-sectional views

CHAPTER 2

OPERATING INSTRUCTIONS

Section I. DESCRIPTION AND USE OF OPERATOR'S CONTROLS AND INDICATORS

2-1. GENERAL This section describes the use of the various controls and indicators to insure proper operation of the Theodolite

2-2. CONTROLS AND INDICATORS Figures 2-1 through 2-5 illustrate and describe the use of the operator's controls and indicators.

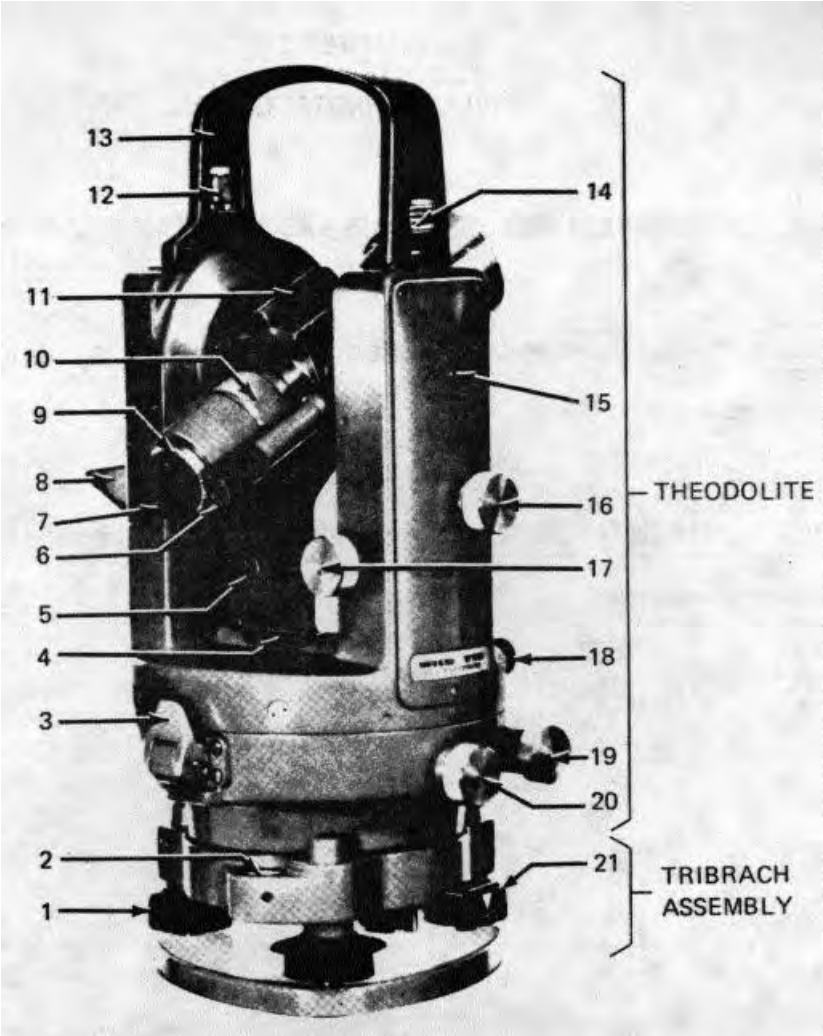

Key	Control or Indicator	Function
1	Footscrew assembly	The three footscrew assemblies are used to level the theodolite.
2	Circular level vial	Provides indication of preliminary leveling of theodolite and tribrach assembly.

5-6675-312-14/2-1.1

Figure 2-1. Theodolite and tribrach assembly controls and indicators (Sheet 1 of 2)

Key	Control or Indicator	Function
3	Clamp lever assembly	Locks horizontal circle in position.
4	Plate level	Used for precision theodolite leveling.
5	Window	Illuminates plate level when electric illumination is used.
6	Reading microscope eyepiece	Used to read horizontal (Hz) and vertical (V) circle scales.
7	Telescope eyepiece	Used for viewing target.
8	Illumination mirror	Directs light upon horizontal and vertical circles during daylight operation.
9	Bayonet lockring	Locks eyepiece In position.
10	Focusing sleeve	Focues target in telescope. Has coarse and fine motion.
11	Optical sight	Used for aiming telescope.
12	Carrying handle locking screw	Secures carrying handle to theodolite.
13 .	Carrying handle	Used to carry theodolite and tribrach assembly
14	Carrying handle safety catch	Secures carrying handle to theodolite.
15	White dot	Indicates tilting axis.
16	Vertical clamp	Locks telescope in vertical position.
17	Vertical drive screw	Provides precision vertical adjustment of telescope.
18	Optical plummet	Used to position theodolite and tribrach assembly over station point.
19	Horizontal drive screw	Provides precision horizontal adjustment.
20	Horizontal clamp	Locks theodolite in horizontal position.
21	Locking knob	Locks theodolite to tribrach assembly.

5-6675-312-14/2-1.2

Figure 2-1. Theodolite and tribrach assembly controls and indicators (Sheet 2 of 2)

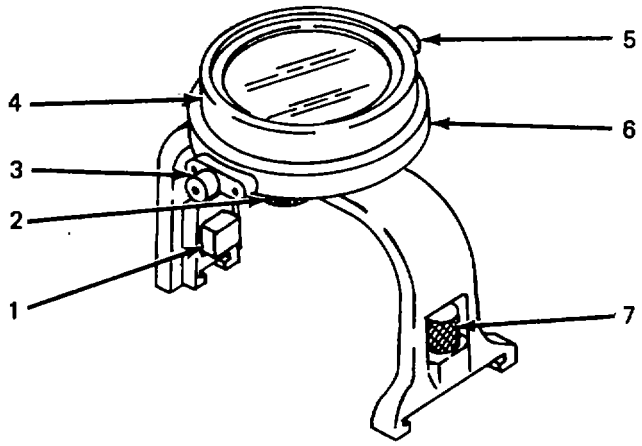

Key	Control or Indicator	Function
1	Circular compass assembly safety catch	Secures compass assembly to theodolite.
2	Spring loaded knob	When released, lifts and clamps pivot so that pivot will not be damaged during transit.
3	Clamp assembly	Used to lock compass housing at desired amount of declination.
4	Compass housing	Used to select compass heading.
5	Eyepiece assembly	Used for viewing compass heading.
6	Metal circle	Indicates declination.
7	Circular compass assembly locking screw	Secures circular compass assembly to theodolite.

56675-312-14/2-2

Figure 2-2. Circular compass assembly controls and indicators

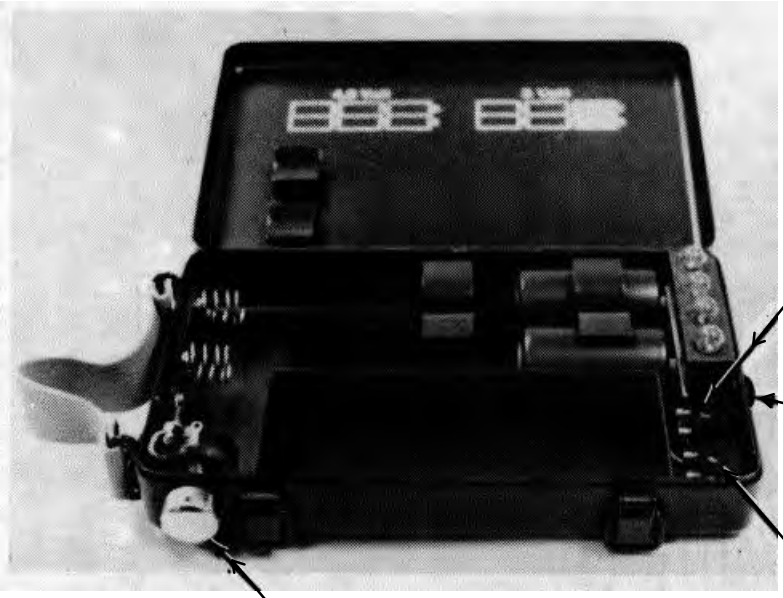

FIXED INTENSITY CONNECTOR
Provides constant voltage when variable brightness is not required.

COVER PLATE KNOB
When slid forward, allows access to fixed and variable intensity connectors.

VARIABLE INTENSITY CONNECTOR
Provides variable voltage, as controlled by the rheostat knob when variable brightness is required.

RHEOSTAT KNOB
Turns handlamp, plug-in lamp, and autocollimation eyepiece lamp on and off, and controls the brightness.

5-6675-31 2-14/2-3

Figure 2-3. Battery box assembly controls

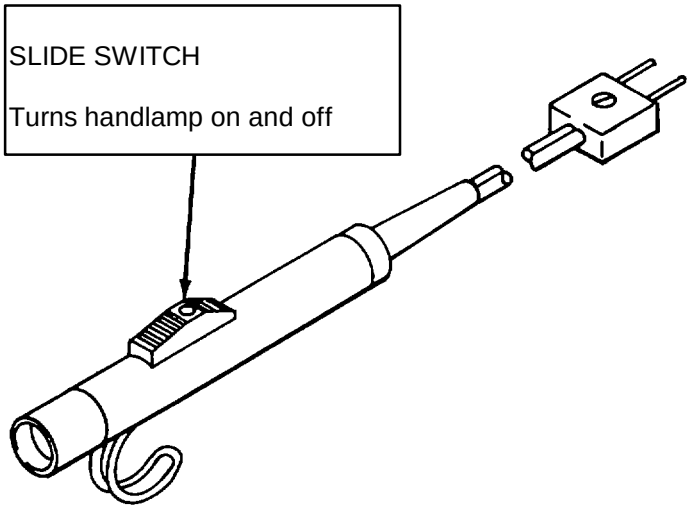

5-6675-312-14/2-4

Figure 2-4. Handlamp controls

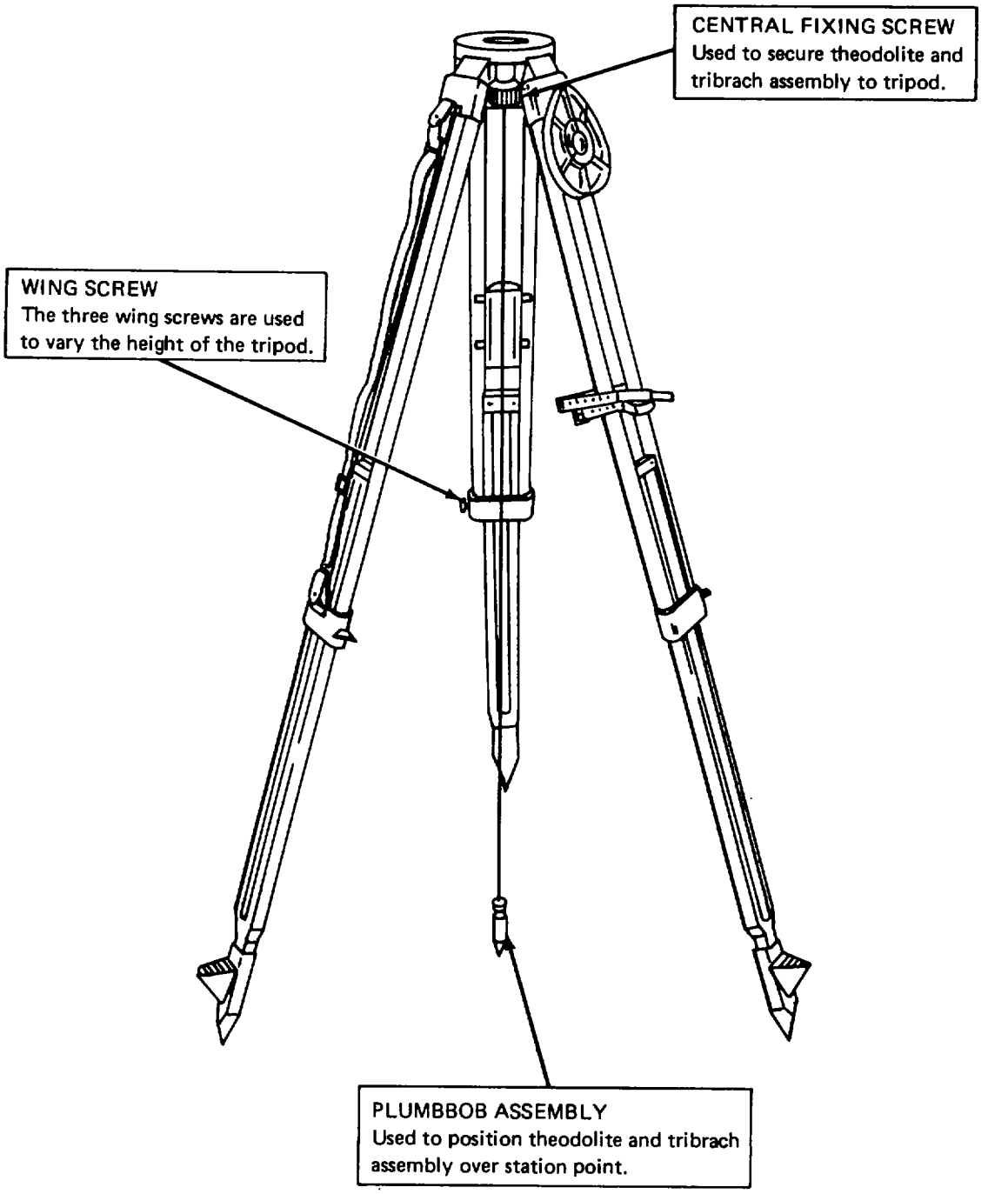

Figure 2-5. Tripod controls

Section II. PREVENTIVE MAINTENANCE CHECKS AND SERVICES

2-3. GENERAL

a. Before you operate. Always keep in mind the CAUTIONS and WARNINGS.

Perform you before (B) PMCS.

b. While you operate. Always keep in mind the CAUTIONS and WARNINGS. Perform your during (D) PMCS.

c. After you operate. Be sure to perform your after (A) PMCS.

d. If your equipment fails to operate. Troubleshoot with proper equipment. Report any deficiencies using the proper forms, see TM 38-750.

2-4. PREVENTIVE MAINTENANCE CHECKS AND PROCEDURES The operator preventive maintenance checks and services are listed in table 2-1.

Table 2-1. Operator Preventive Maintenance Checks and Services

NOTE: Within designated interval these checks are to be performed in the order listed.

B - Before **A - After**
D - During **W - Weekly**

Item No.	Interval				Item to be inspected	Procedures Check for and have repaired or adjusted as necessary	For readiness reporting, equipment is not ready/ available if:
	B	D	A	W			
1	▪	▪	▪	▪	Metal Carrying Case	Inspect for serviceability. Check desiccant for proper color	

Table 2-1. Operator Preventive Maintenance Checks and Services (cont)

Item No.	Interval				Item to be inspected	Procedures Check for and have repaired or adjusted as necessary	For readiness reporting, equipment is not ready/ available if:
	B	D	A	W			
						(blue). De-hydrate or re-place desiccant if any other color.	
2	▪		▪	▪	Battery Box Assembly	Inspect for pre-sence of com-ponents. In-spect batteries and wiring for serviceable con-dition. Check rheostat for tight and clean connections and proper opera-tion.	
3	▪		▪	▪	Rucksack	Inspect for ser-viceable con-dition.	

Table 2-1. Operator Preventive Maintenance Checks and Services (cont)

Item No.	Interval B	Interval D	Interval A	Interval W	Item to be inspected	Procedures Check for and have repaired or adjusted as necessary	For readiness reporting, equipment is not ready/ available if:
4	▪		▪	▪	Accessory Case	Inspect for serviceability and presence of components.	Component(s) are missing
5	▪		▪	▪	Eyepiece Prism Assembly	Inspect for cracks, chips, and serviceability.	Cracks or chips are present
6	▪	▪	▪	▪	Handlamp	Inspect for serviceable condition and proper operation.	Handlamp does not operate properly.
7	▪	▪	▪	▪	Plug-in Lamp	Inspect for serviceable condition and proper operation.	Plug-in lamp does not operate properly.
8	▪	▪	▪	▪	Sunshade chips, and serviceability.	Inspect for cracks, are present.	Cracks or chips
9	▪	▪	▪	▪	Black Filter Eyepiece	Inspect for cracks, chips, and serviceability.	Cracks or chips are present

Table 2-1. Operator Preventive Maintenance Checks and Services (cont)

Item No.	Interval B	Interval D	Interval A	Interval W	Item to be inspected	Procedures Check for and have repaired or adjusted as necessary	For readiness reporting, equipment is not ready/ available if:
10	▪	▪	▪	▪	Autocollimation Eyepiece	Inspect for serviceable condition and proper operation.	Autocollimation eyepiece does not operate properly.
11	▪	▪	▪	▪	Circular Compass Assembly	Inspect for serviceable condition and proper operation. Clean with a clean int-free cloth.	Circular compass assembly does not operate properly.
12	▪	▪	▪	▪	Telescope Level	Inspect for serviceable condition and proper operation. Clean with a clean, lint-free cloth.	Telescope level does not operate properly.
13	▪	▪	▪	▪	Theodolite	Inspect eyepieces, adjusting and clamping knobs, and	Theodolite damaged.

Table 2-1. Operator Preventive Maintenance Checks and Services (cont)

Item No.	Interval B	Interval D	Interval A	Interval W	Item to be inspected	Procedures Check for and have repaired or adjusted as necessary	For readiness reporting, equipment is not ready/ available if:
						adjusting screws for proper operation. Inspect for paint chips. Clean metal parts with clean, lint-free cloth, if necessary. Inspect lenses, level vials, and mirrors for cracks, cleanliness, and serviceable condition. Clean lenses, level vials, and mirror with lens tissue or dust brush.	
14	▪	▪	▪	▪	Tribrach Assembly	Inspect for cracks, breaks, proper operation, and cleanliness. Clean tribrach	Cracked, broken or does not operate properly.

Table 2-1. Operator Preventive Maintenance Checks and Services (cont)

Item No.	Interval B	Interval D	Interval A	Interval W	Item to be inspected	Procedures Check for and have repaired or adjusted as necessary	For readiness reporting, equipment is not ready/ available if:
						assembly with clean, lint-free cloth.	
15	▪	▪	▪	▪	Tripod	Inspect for serviceable con p dition. Inspect tripod accessory case for tears and other damage. Check tripod accessory case for presence of plumbbob assembly and allen wrench.	
16	▪	▪	▪	▪	Controls and Indicators	Inspect for serviceable condition. Check for proper operation.	Operation is improper.

NOTE

During operation observe for proper function, alinement, adjustment, and calibration.

Section III. OPERATION UNDER USUAL CONDITIONS

2-5. GENERAL This section provides step-by-step instructions for all actions necessary to operate the equipment.

WARNING

Always notify the battery executive officer before starting operations so that adequate warning can be given operators prior to a firing exercise. Always notify the chief of any construction project of the survey plans, in order to protect operators against injury from moving equipment and blasting.

a. The instructions in this section are published for the information and guidance of personnel responsible for operation of Theodolite.

b. The operator must know how to perform every operation of which the Theodolite is capable. This section gives instructions on handling and preparation for operation of the Theodolite basic motions, adjustments, and on coordinating the basic motions to perform the specific tasks for which the equipment is designed. Since nearly every job presents a different problem, the operator may have to vary given procedures to fit the individual job.

2-6. ASSEMBLY AND PREPARATION FOR USE

CAUTION

Avoid setting up the equipment near a battery or firing site, where possible vibrations may affect the accuracy of the equipment.

a. Unpacking Equipment. Select a location that is protected from the weather. Set the Theodolite shipping case up off the ground on a box, table, or on the tripod shipping crate. After unpacking, do not discard the theodolite shipping case or the tripod shipping crate and packing materials.

(1) Theodolite and Tribrach Assembly

(a) Release shipping case snap-lock (fig. 2-6) and open shipping case cover.

(b) Grasp metal carrying case strap (fig. 2-6) with both hands and lift metal carrying case out of shipping crate.

(c) Grasp the carrying strap (fig. 2-7) just above the two lock levers and pull outward to release clamps.

(d) Lift the hood (fig. 2-7) from the base.

(e) Lift the two levers (fig. 2-8) to release the clamps that secure theodolite and tribrach assembly to metal carrying case base.

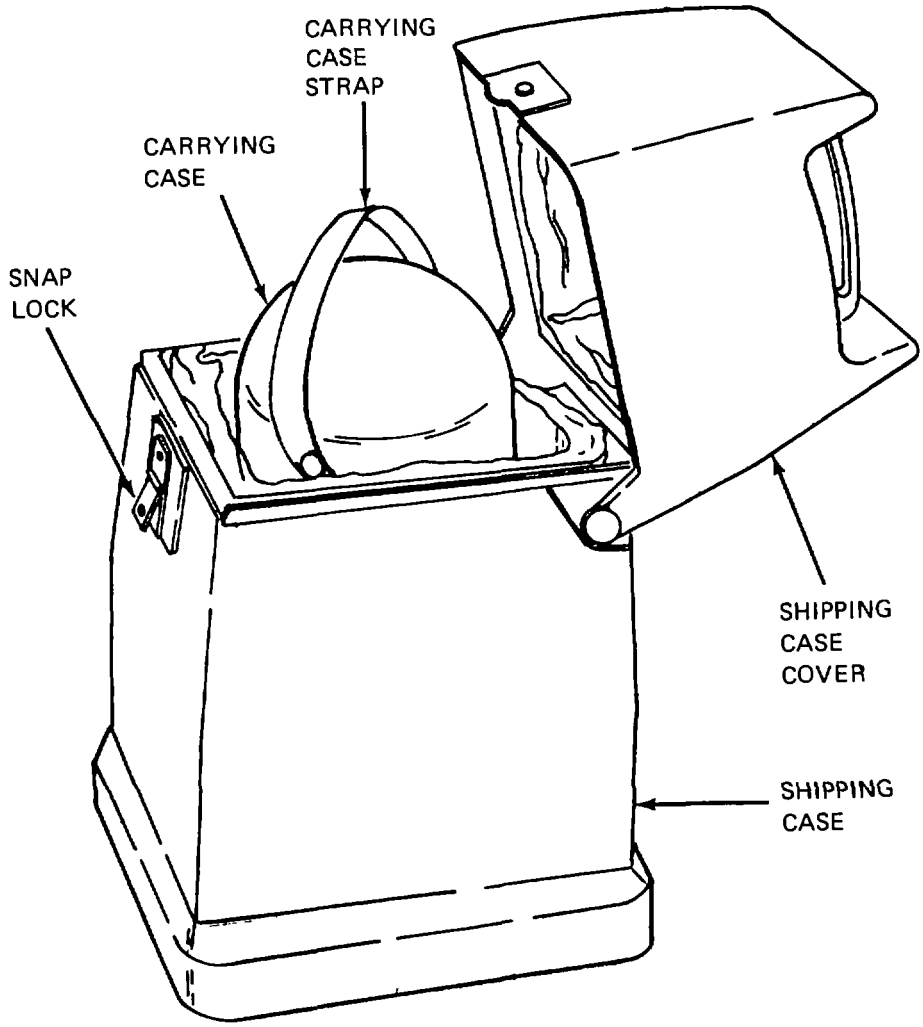

NOTE: GRASP CARRYING CASE STRAP WITH BOTH HANDS AND REMOVE THEODOLITE IN ITS CARRYING CASE, FROM THE SHIPPING CASE.

5-6675-312-14/2-6

Figure 2-6. Removal of metal carrying case from shipping case.

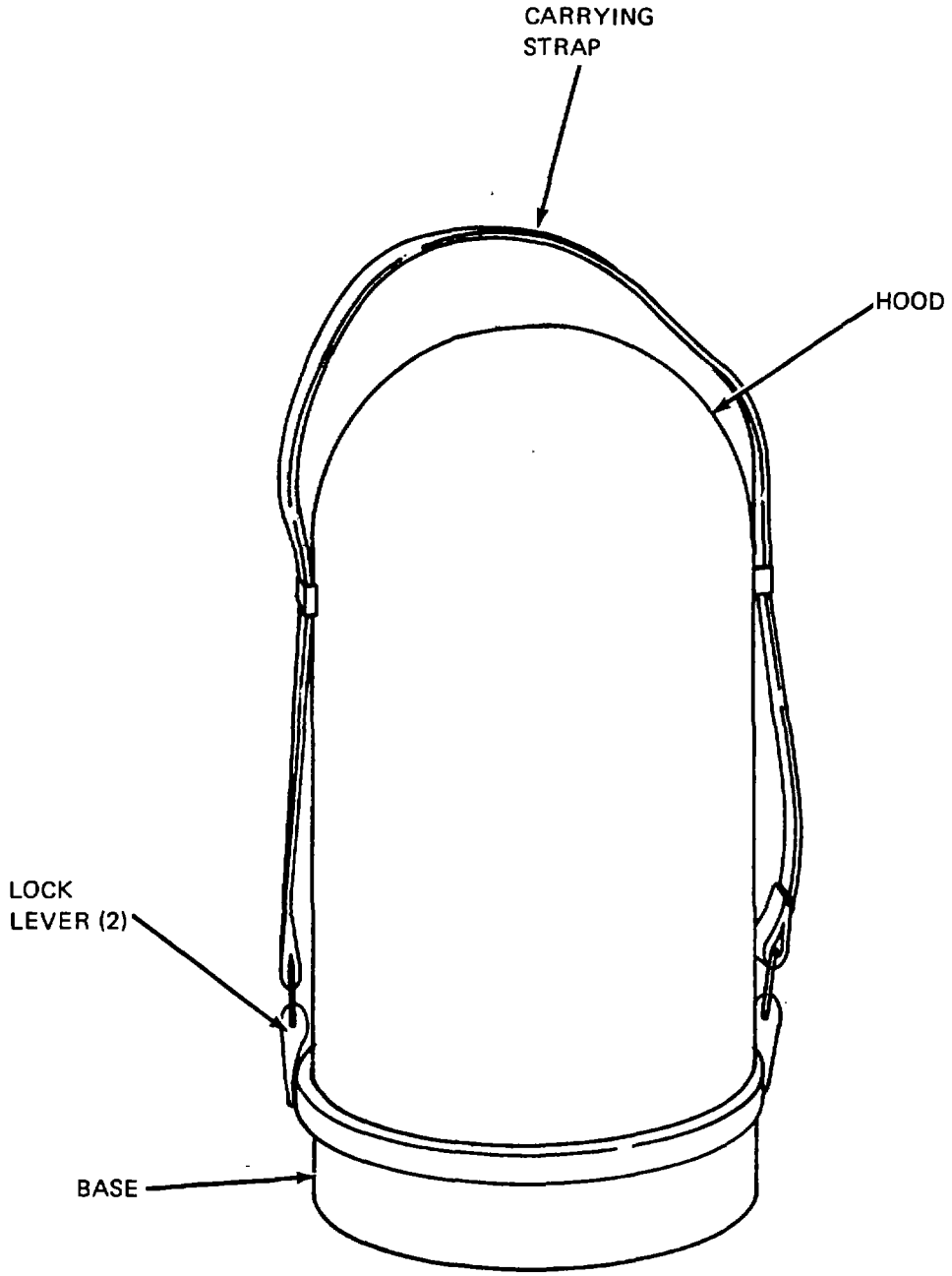

STEP 1. Grasp carrying strap just above lock levers and pull outward to release clamps.

STEP 2. Lift the hood from the base.

5-6675-312-14/2-7

Figure 2-7. Removal of metal carrying case hood.

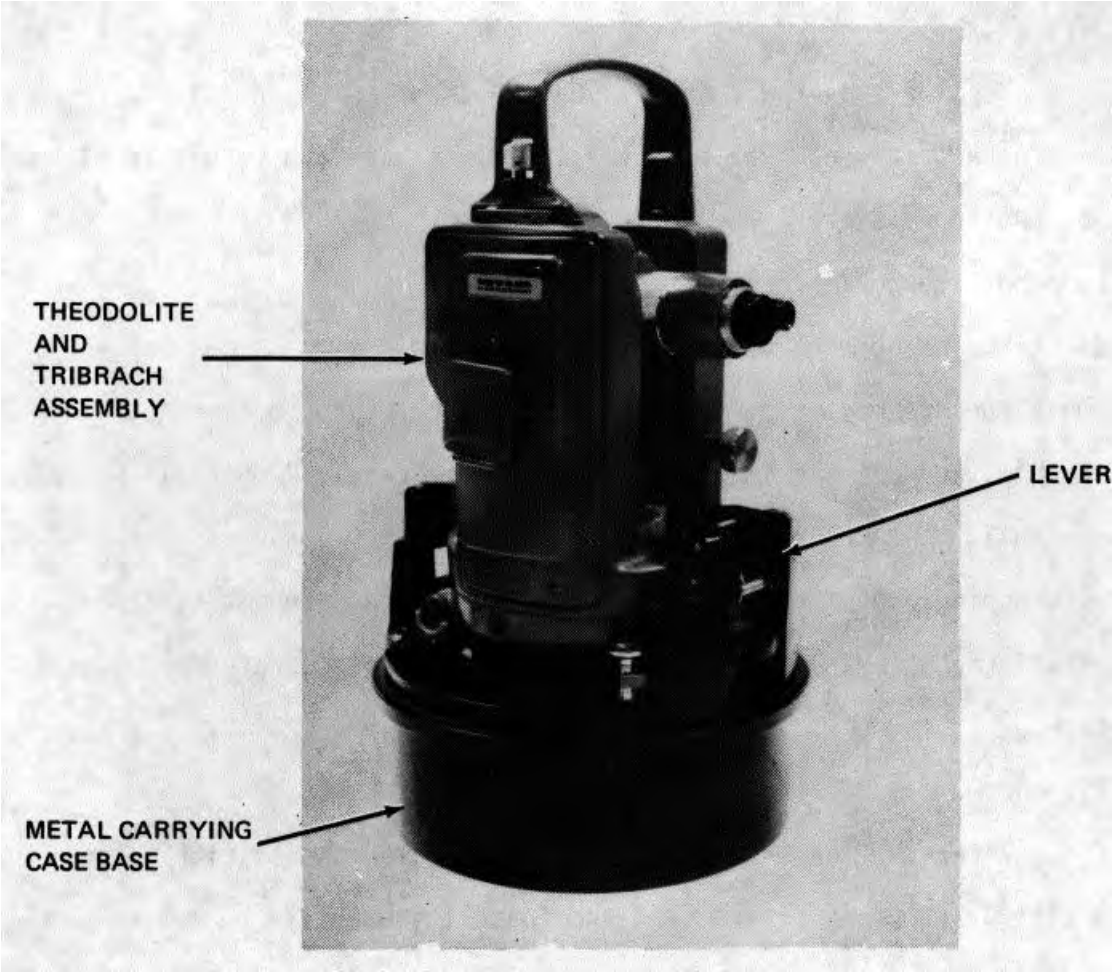

STEP 1. Lift the two levers to release the clamps that secure the theodolite and tribrach assembly to the metal carrying case base.

STEP 2 Lift theodolite off of metal carrying case base and place theodolite and tribrach assembly on a level, secure surface.

Figure 2-8. Removal of theodolite and tribrach assembly from metal carrying case base.

(f) Lift the theodolite and tribrach assembly off of the metal carrying case base and place theodolite and tribrach assembly on level, secure surface.

(g) Close shipping case cover (fig. 2-6) and secure with snap-lock.

(h) Place metal carrying case hood (fig. 2-7) on base and secure in place with two lock levers.

(2) Tripod and Accessories.

(a) Remove the top of the tripod shipping crate.

(b) Remove the wrapped tripod, rucksack, accessory case, battery box assembly, and all packing material from the crate. Remove all wrapping material.

(c) Put wrapping and packing materials in the tripod shipping crate and install the shipping crate top. Store the shipping crate in a safe place.

b. Installation.

(1) Tripod. Refer to figure 2-9 and erect tripod over the station point.

(2) Theodolite. Refer to figure 2-10 and install theodolite on tripod.

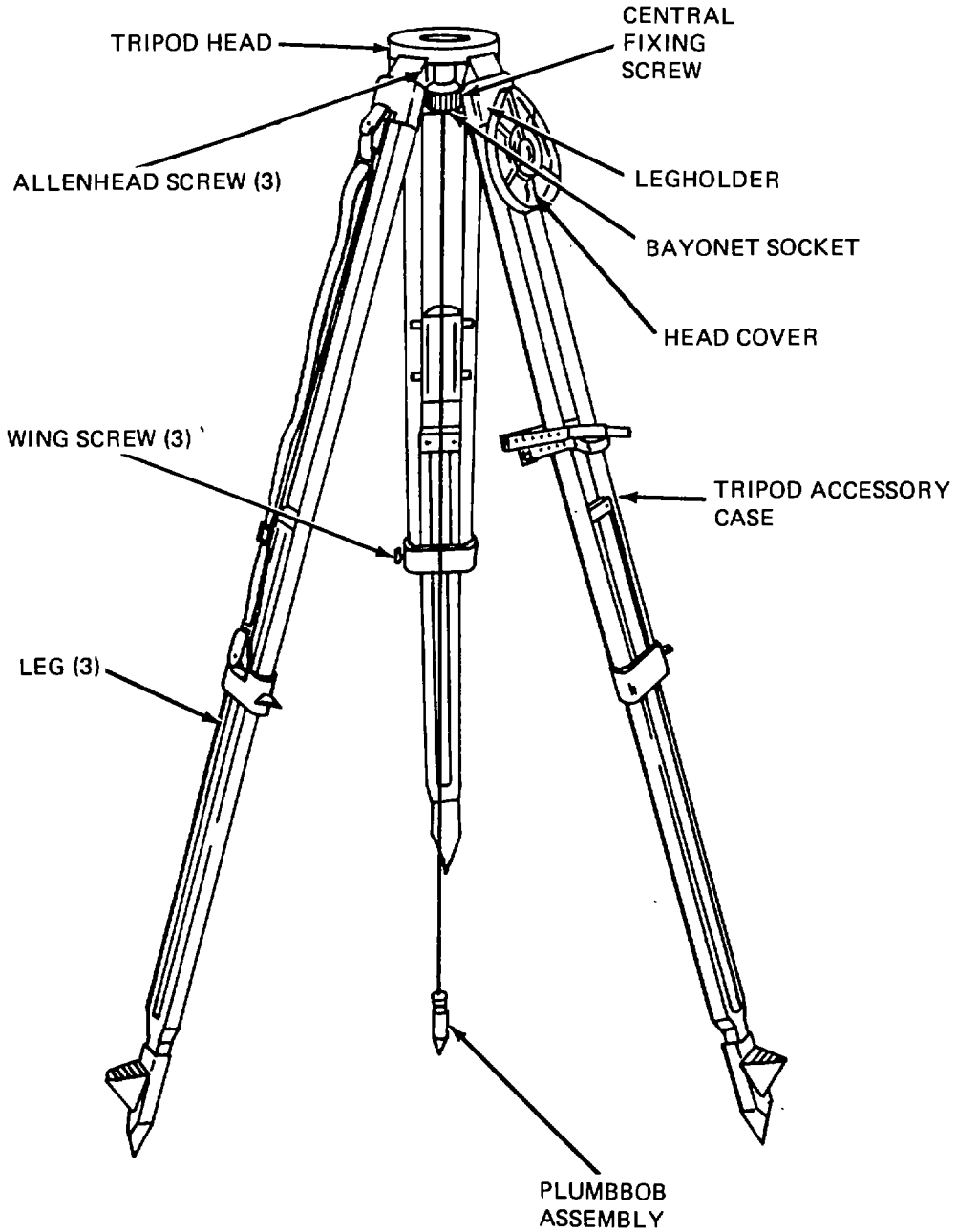

STEP 1. Unfold and extend legs to desired length. Tighten three wing screws.

STEP 2. Tighten Allenhead screws.

STEP 3. Remove head cover. Hook on legholder as shown.

STEP 4. Remove plumbbob assembly from tripod accessory case, insert bayonet socket into central fixing screw. Secure by turning clockwise 1/4 turn.

STEP 5. Position tripod so that plumbbob is 1/2-inch from station point.

STEP 6. Set legs firmly in ground with foot pressure.

5-6675-312-14/2-9

Figure 2-9. Tripod installation.

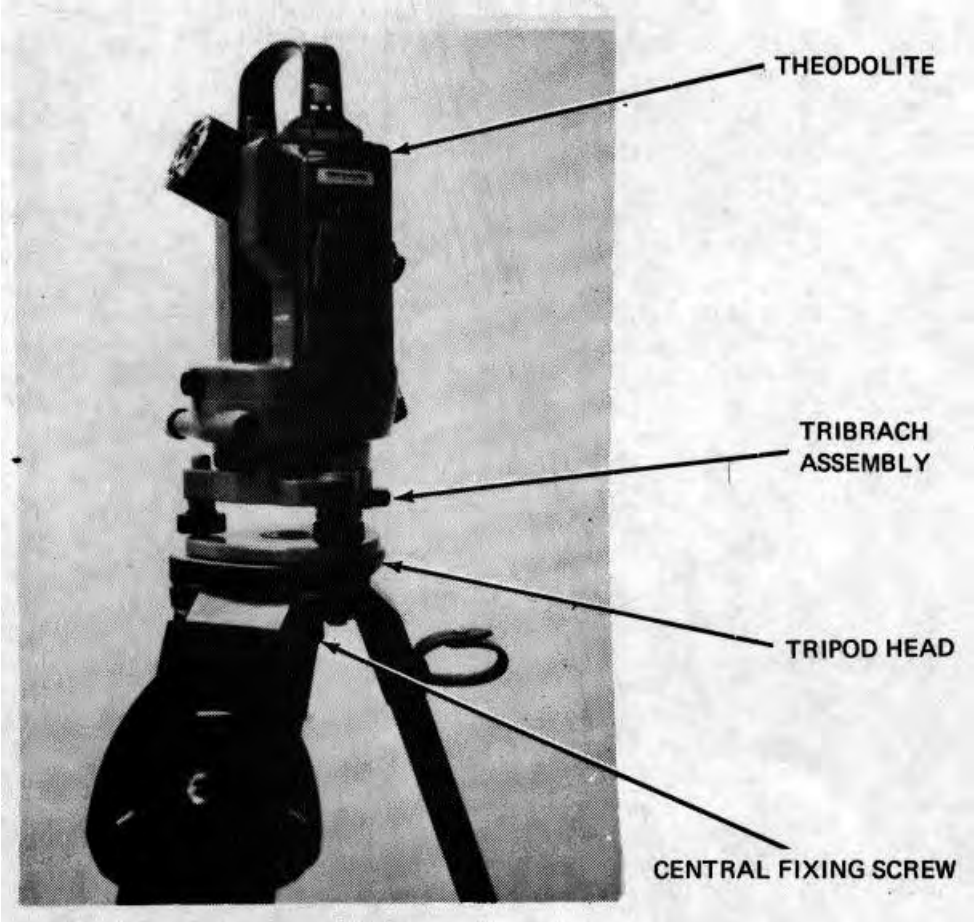

STEP 1. Position theodolite and tribrach assembly on tripod head and secure with central fixing screw.

Figure 2-10. Theodolite and tribrach assembly installation on tripod.

2-7. INITIAL ADJUSTMENTS AND DAILY CHECKS

a. General. Perform the daily preventive maintenance services (para. 2-4).

b. Metal Carrying Case.

(1) Inspect the metal carrying case hood and base (fig. 2-7) for dents, cracks, and rust. Inspect clamps and carrying strap for defects.

(2) Inspect the gasket in the metal carrying base (fig. 2-8).

(3) Inspect the metal carrying case desiccant for discoloration.

NOTE

Desiccant should be blue in color. Pink desiccant indicates moisture saturation and must be dehydrated or replaced.

c. Theodolite and Tribrach assembly.

(1) Visually inspect the theodolite for broken or missing parts, cracked or scratched lenses and mirror, loose or missing hardware, and other indications of damage.

(2) Rotate the tribrach assembly three footscrew assemblies (fig. 2-1) and inspect for rough travel and instability.

(3) Inspect the theodolite horizontal drive screw and horizontal clamp (fig. 2-1) for proper operation.

(4) Inspect the theodolite vertical drive screw and vertical clamp (fig. 2-1) for proper operation.

(5) Inspect the theodolite telescope eyepiece, reading microscope eyepiece, and focusing sleeve (fig. 2-1) for proper operation and smooth operation throughout their full travel.

d. Tripod.

(1) Refer to figure 2-11 and inspect the tripod for damaged or missing parts and loose or missing hardware.

(2) Refer to figure 2-12 and inspect the tripod accessory case for damage. See that the plumbbob assembly and allen wrench are contained in the case and are in serviceable condition.

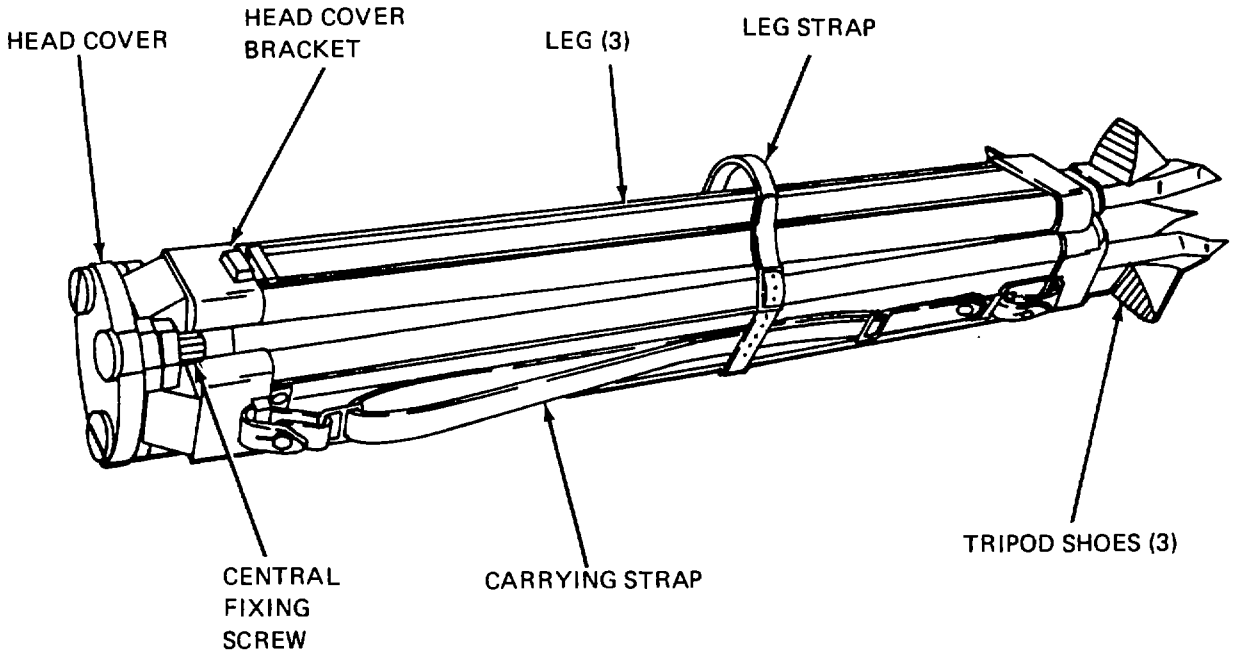

5-6675-312-14/2-11

Figure 2-11. Tripod.

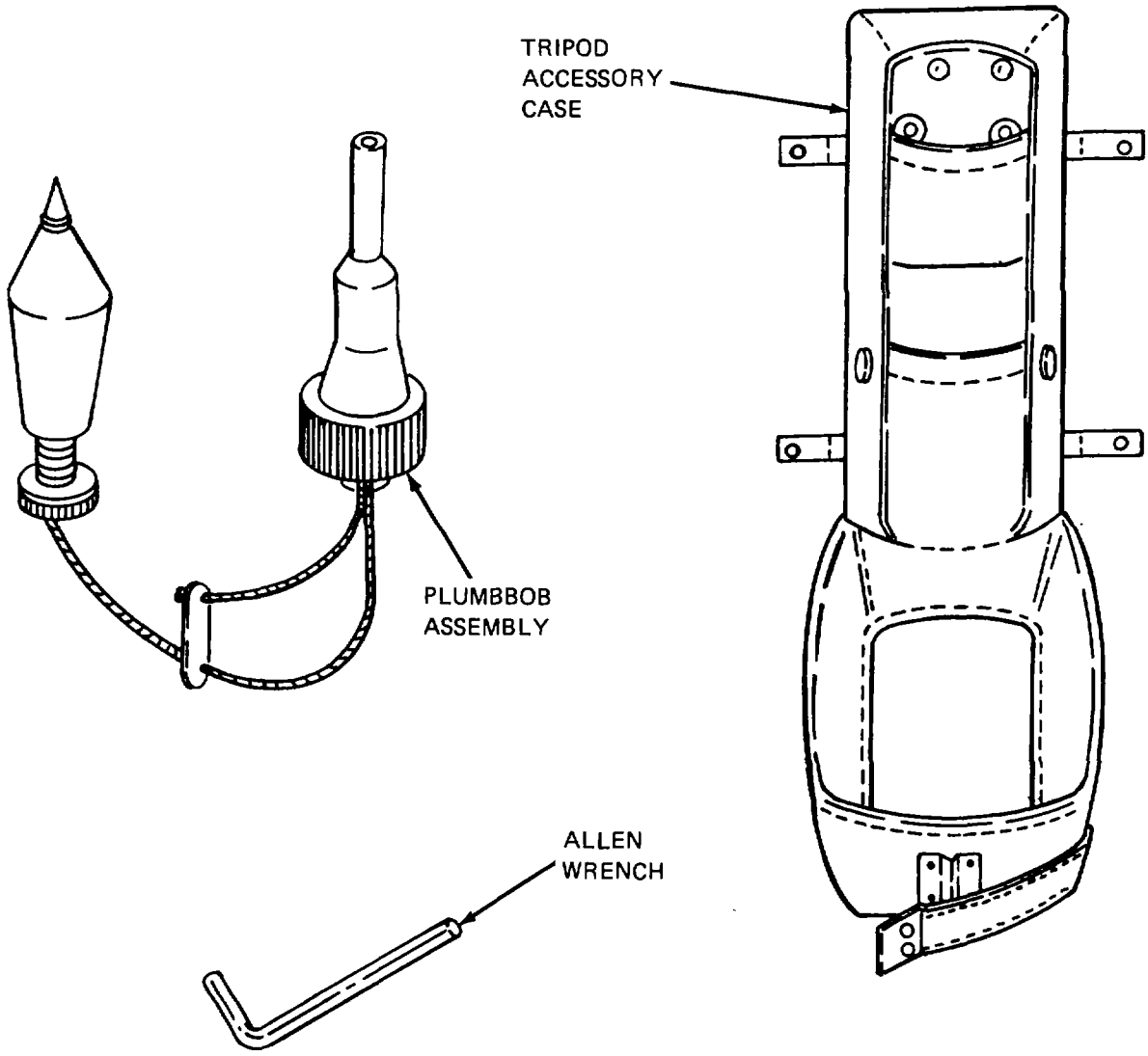

5-6675-312-14/2-12

Figure 2-12. Tripod accessory case, unpacked view.

e. Accessory Case.

(1) Inspect the accessory case for damage and defective zipper and shaps. Make certain that the accessory case contains the components shown in figure 2-13.

(2) Inspect the black eyepiece filter and autocollimation eyepiece for scratches, cracks, and defective mounting surfaces.

(3) Inspect plug-in lamp and autocollimation eyepiece for broken glass, corroded or defective contacts, and defective wires.

(4) Inspect telescope level for broken or cracked glass, cracks and rust.

f. Battery Box Assembly.

(1) Inspect the battery box assembly (fig. 2-14) for damage, rust, and defective clamps and carrying handle. Make certain the box contains all the components shown in figure 2-14.

(2) Turn the rheostat knob through its full travel. The movement should be smooth and free of binding.

(3) Inspect all electrical contacts for loose connections and corrosion.

(4) Inspect the handlamp for broken casing, defective slide switch, insecure or damaged plug, and frayed insulation.

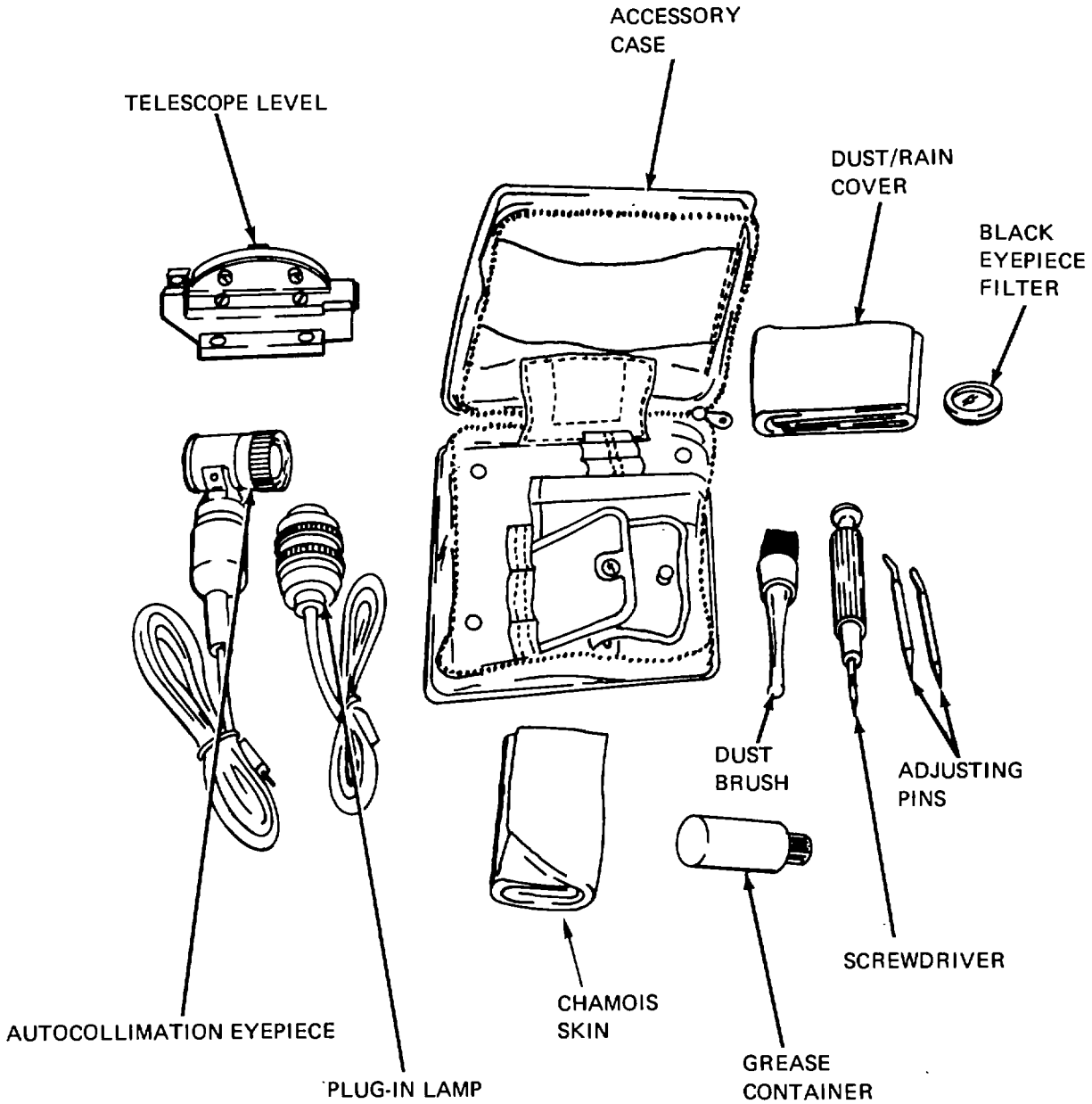

5-6675-312-14/2-13

Figure 2-13. Accessory, case, unpacked view.

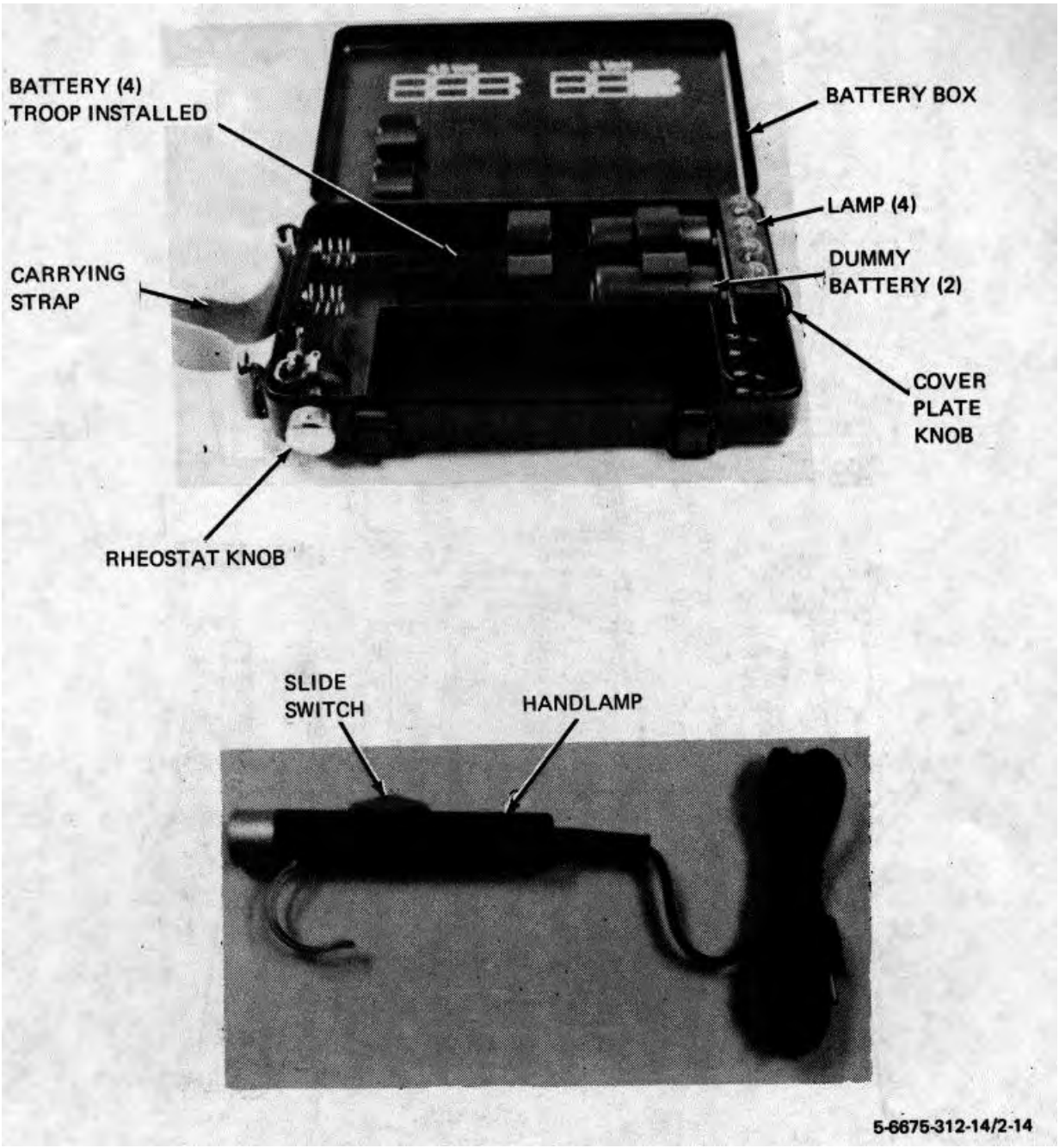

Figure 2-14. Battery box assembly, unpacked view.

g. Rucksack. Inspect the rucksack (fig. 2-15) for damaged straps, insecure or defective buckles, torn padding, and tears or cuts.

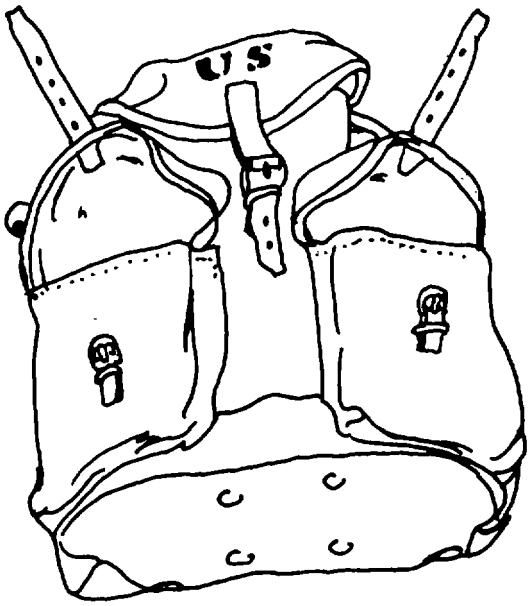

5-6675-312-14/2-15

Figure 2-15. Rucksack

h. Eyepiece Prism Assembly.

(1) Inspect eyepiece prism assembly case (fig. 2-16) for defective zipper.
(2) Inspect the eyepiece prism assembly for scratches, cracks, and defective mounting surfaces.

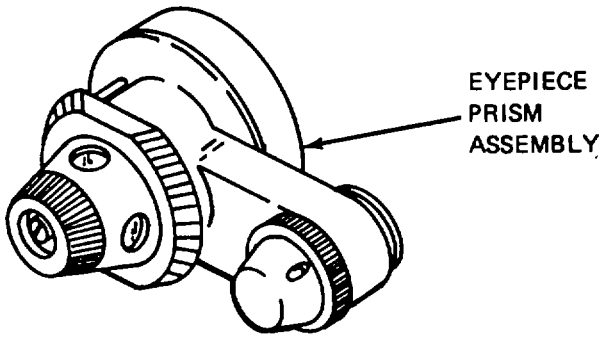

5-6675-312-14/2-16

Figure 2-16. Eyepiece prism assembly.

i. Sunshade. Inspect the sunshade (fig. 2-17) for distortion and cracks.

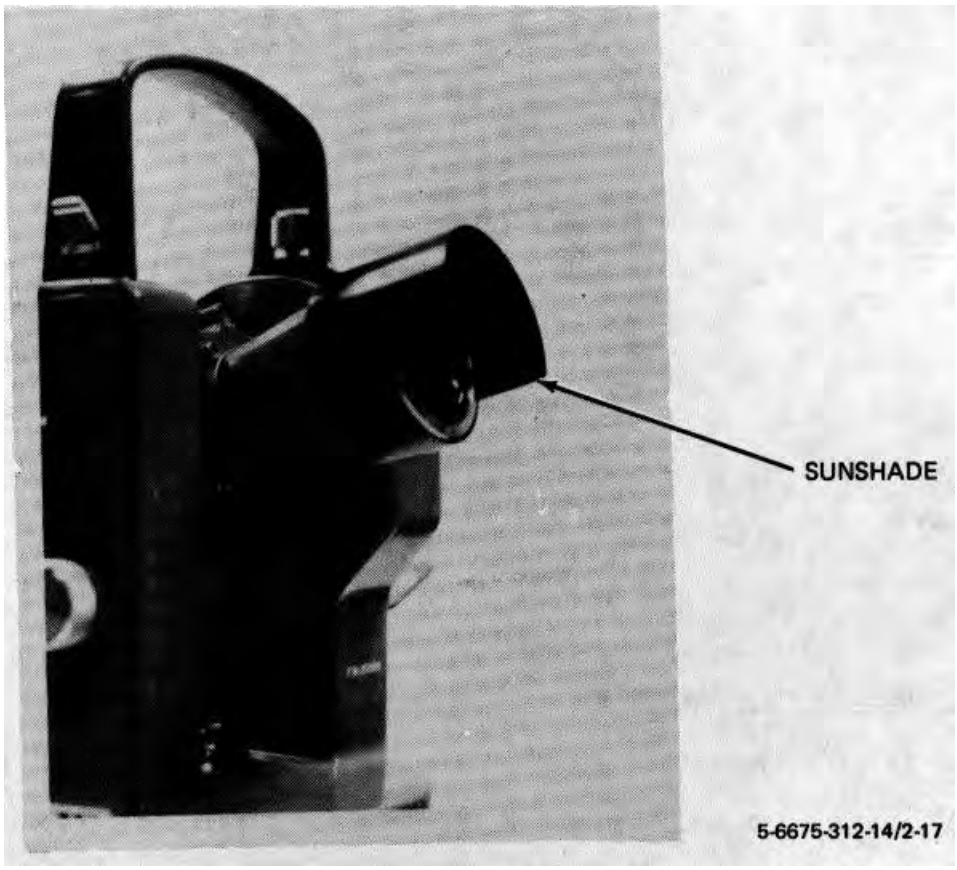

Figure 2-17. Sunshade.

j. Circular Compass Assembly.

(1) Inspect circular compass assembly (fig. 2-18) carrying case for damage and defective snap.
(2) Inspect circular compass assembly safety catch and locking screw for proper operation.
(3) Inspect circular compass assembly for scratched and broken glass, and damaged compass circle.
(4) Inspect circular compass assembly release knob for proper operation.
(5) Inspect circular compass assembly clamp assembly for proper operation.

(6) Inspect circular compass assembly eyepiece assembly for scratches, cracks, and defective operation.
(7) Inspect compass case and metal circle for scratches, cracks and corrosion.

12-8. OPERATING PROCEDURES The following paragraphs contain the preparation for operation instructions and the normal autocollimation eyepiece, circular compass assembly, and telescope level operating procedures.

a. Preparation for Operation. Preparation for operation consists of centering the theodolite and tribrach assembly (on the tripod) over the station point and leveling the theodolite. The theodolite and tribrach assembly can be centered using either the plumbbob assembly or the optical plummet.

(1) Centering with the Plumbbob. To center the theodolite and tribrach assembly over the station point using the plumbbob assembly, refer to figure 2-19.

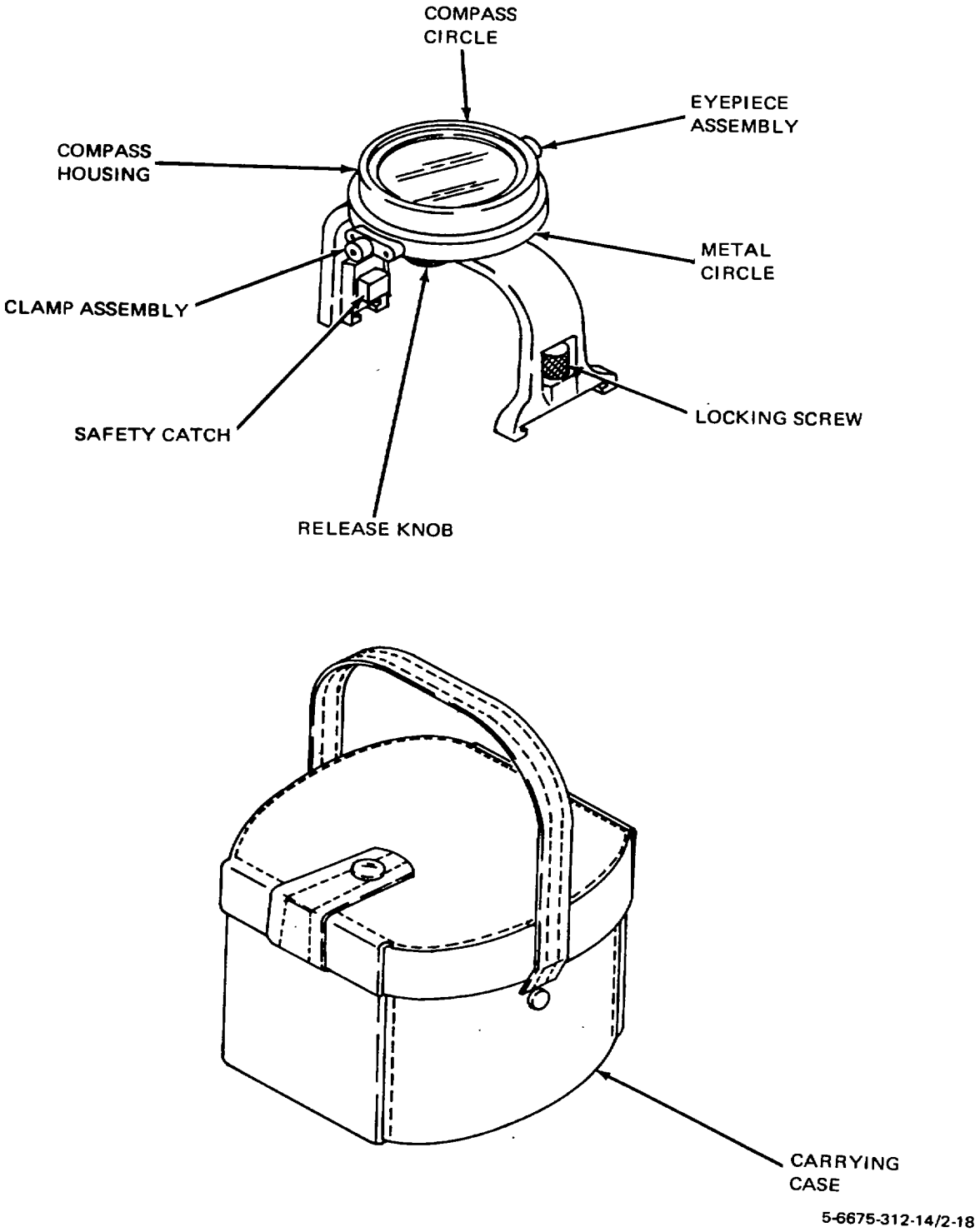

Figure 2-18. Circular compass assembly.

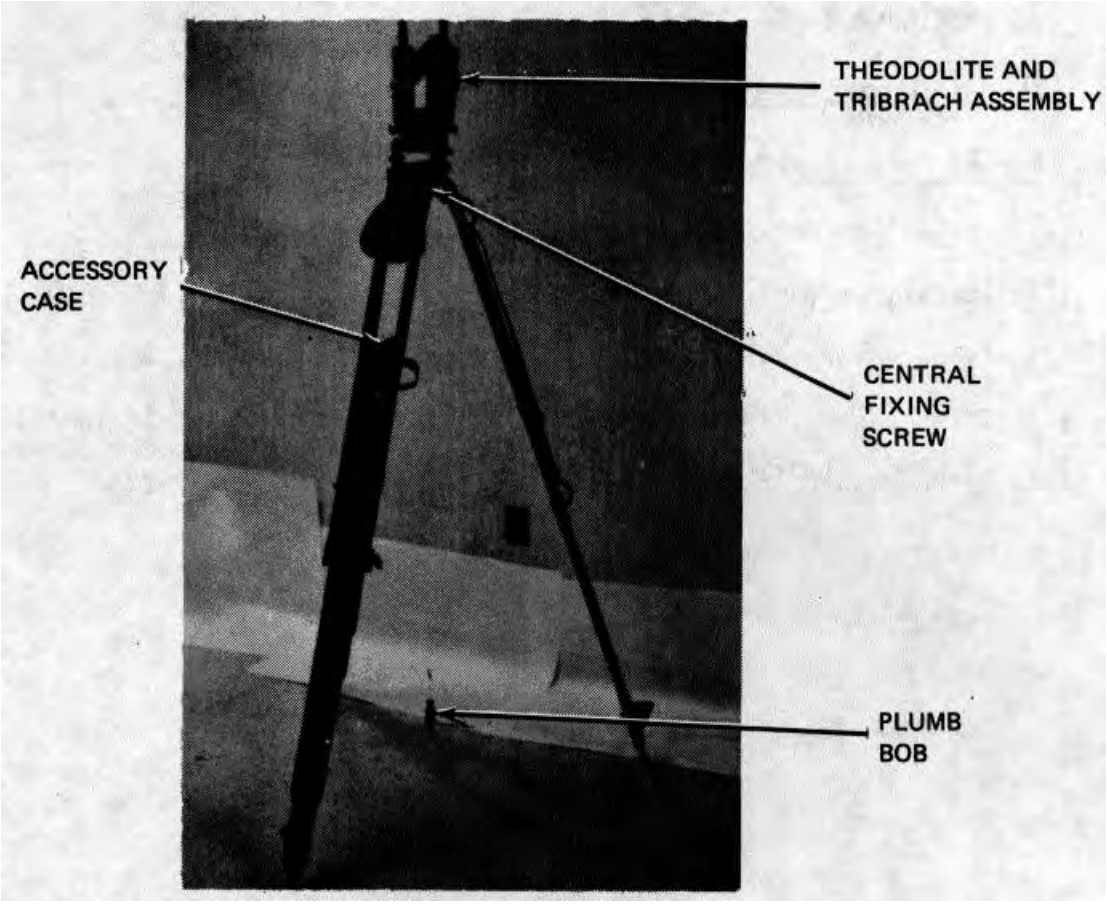

STEP 1. Install tripod (refer to figure 2-9).
STEP 2. Loosen central fixing screw and move theodolite and tribrach assembly on tripod until plumbbob is exactly over station point.
STEP 3. Tighten central fixing screw insuring that plumbbob remains exactly over station point.

5-6675-31 2-14/2-19

Figure 2-19. Centering with the plumbbob.

(2) Centering using the Optical Plummet. To center the theodolite and tribrach assembly over the st.tiotn point using the optical plummet refer to figure 2-20.
(3) Leveling. To level the theodolite refer to figure 2-21.

b. Normal Operation.

(1) Install theodolite on tribrach assembly (fig. 3-7).
(2) Install theodolite on tribrach assembly on tripod (fig. 2-10).
(3) If necessary, install the battery box assembly (fig. 3-1).
(4) If necessary, install the handlamp (3-2) or the plug-in lamp (fig. 3-3).
(5) If necessary install eyepiece prism assembly (fig. 2-22).

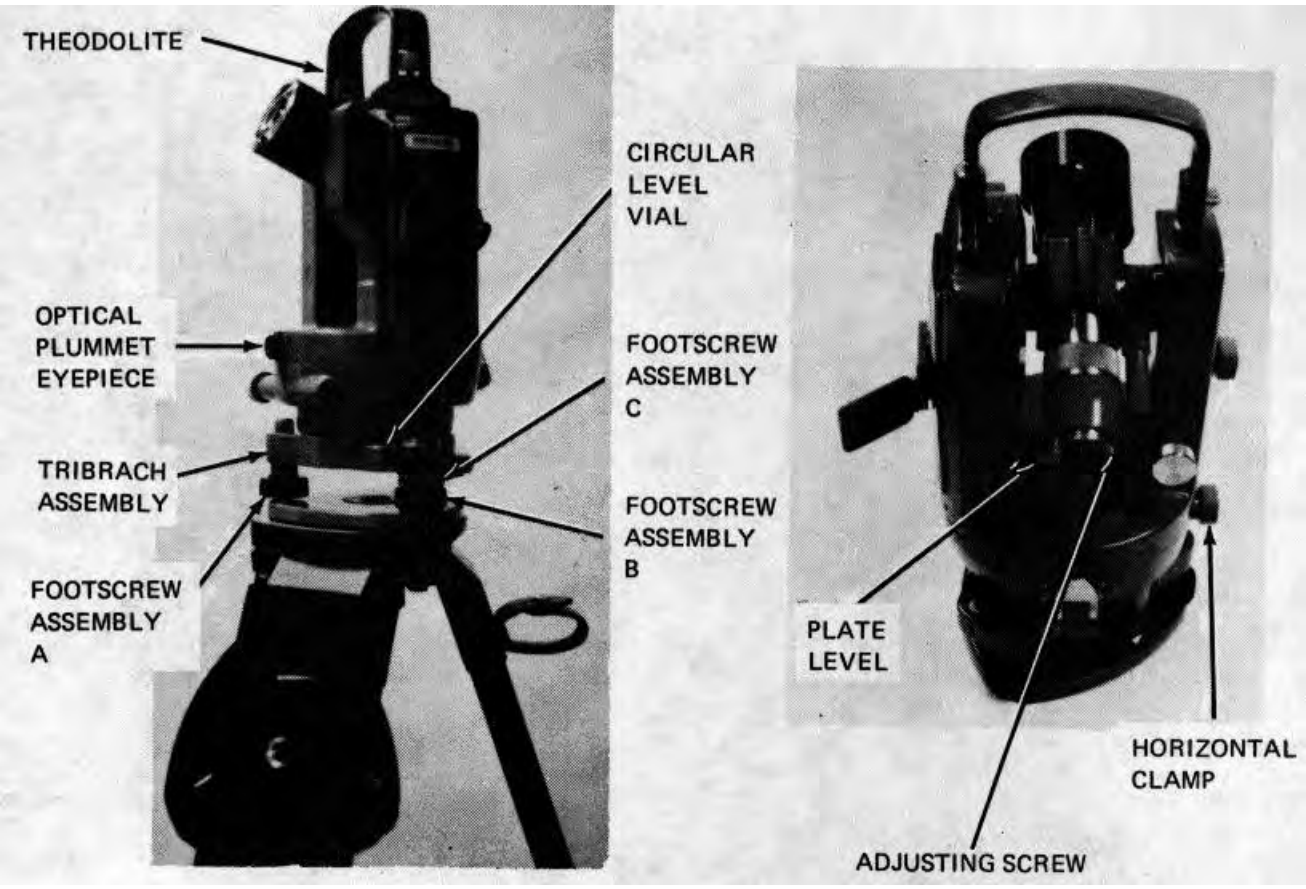

STEP 1. Install tripod (refer to figure 2-9).
STEP 2. Center theodolite and tribrach assembly using plumbbob (refer to figure 2-19).
STEP 3. Remove plumbob assembly by rotating bayonet socket one-quarter turn counter-clockwise and pulling down.
STEP 4. Level theodolite and tribrach assembly (refer to figure 2-21).
STEP 5. Turn optical plummet eyepiece to focus cross hairs.
STEP 6. Pull out or push in optical plummet eyepiece to focus station point.
STEP 7. Loosen central fixing screw and move theodolite and tribrach assembly until cross hairs coincide with station point. Do not rotate theodolite and tribrach assembly in relation to tripod or level will be disturbed. Tighten central fixing screw.
STEP 8. Relevel theodolite (refer to figure 2-21).
STEP 9. Repeat steps 4, 5, and 6.
STEP 10. Release horizontal clamp, rotate theodolite 1800°.
STEP 11. Loosen central fixing screw and move theodolite to take up one-half of the deviation.
STEP 12. Relevel theodolite (refer to figure 2-21).
STEP 13. Centering is correct when, for a full rotation (3600) of the theodolite, the cross hairs remain on the station point.

5-6675-31 2-14/2-20

Figure 2-20. Centering with optical plummet.

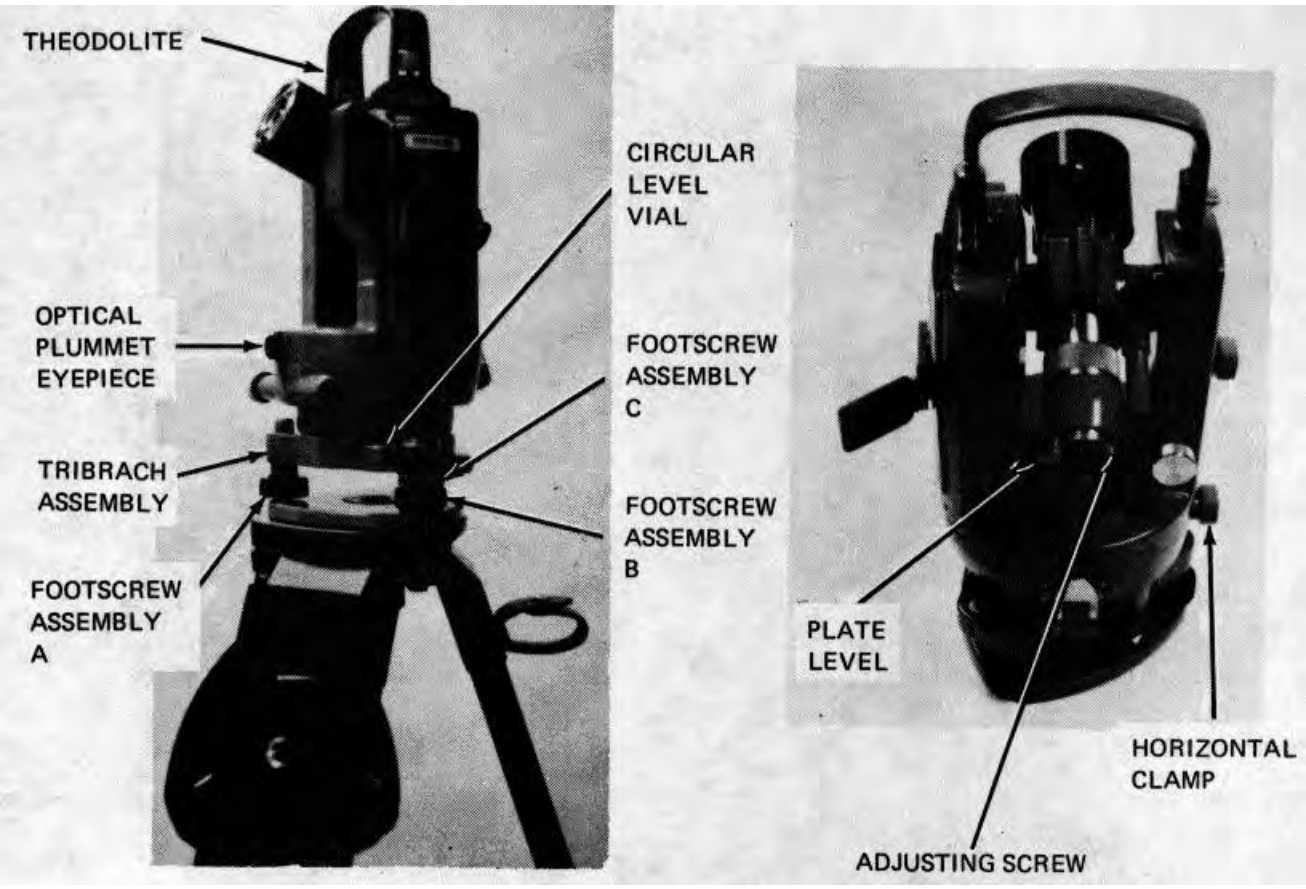

STEP 1. Adjust footscrew assemblies, A, B, and C to center bubble in circular level vial.

STEP 2. Release horizontal clamp and rotate theodolite so that optical plummet eyepiece is over any one of the footscrew assemblies which will become footscrew assembly A.

STEP 3. Rotate footscrew assemblies B and C in equal but opposite directions to center the plate level bubble.

STEP 4. Rotate the theodolite 900 clockwise and center the bubble in plate level using footscrew assembly A.

STEP 5. Rotate the theodolite 900 clockwise and note the position of the bubble in plate level. Bring the bubble in plate level to a point halfway between noted position and center position (mean position) by rotating footscrew assemblies B and C in equal but opposite directions.

STEP 6. Rotate theodolite 900 clockwise and set the bubble in plate level to the mean (halfway position noted in step 5) using the footscrew assembly A.

STEP 7. Rotate the theodolite slowly through 360° and observe that the bubble in plate level remains in the mean position.

STEP 8. If the bubble in plate level does not remain in the mean position throughout 360°, repeatthis procedure but use the mean position observed in step 5.

NOTE

The theodolite is level when the bubble in plate level remains in the same, though not necessarily the center position, for all directions of the theodolite.

STEP 9. Using adjusting pin adjust plate level adjusting screw to center the bubble in plate level.

5-6675-312-14/2-21

Figure 2-21. Leveling.

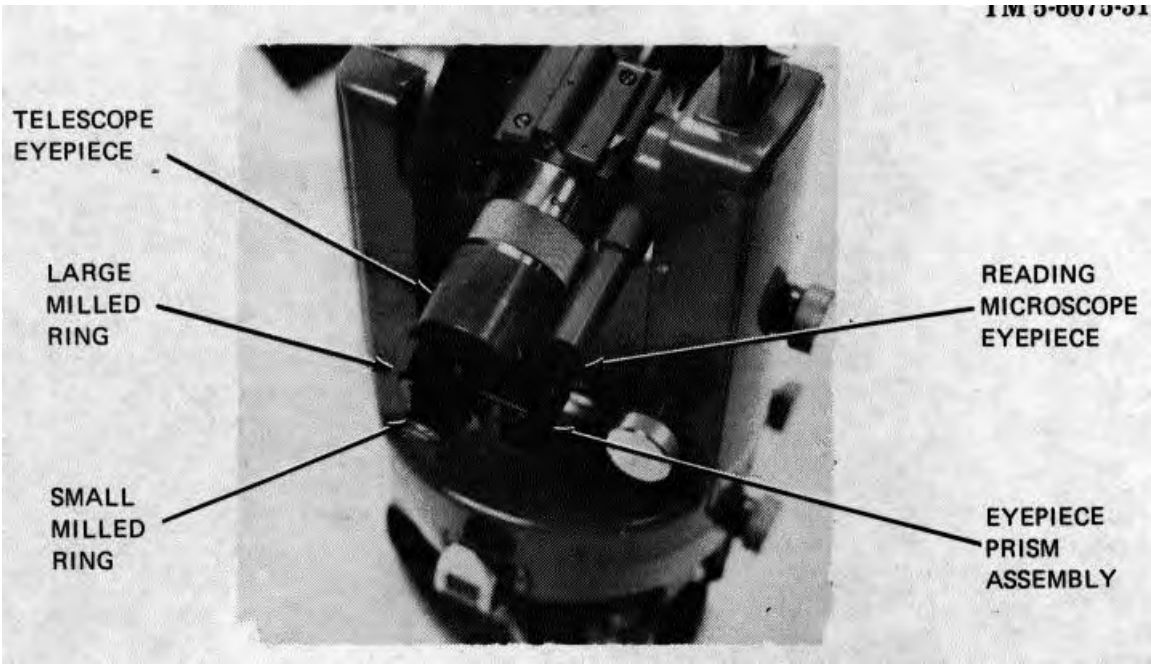

STEP 1. Push eyepiece prism assembly onto telescope eyepiece and reading microscope eyepiece.
STEP 2. Select yellow, green, or black filter by rotating the small milled ring.
STEP 3. Position the face of the prisms, as required by rotating the large milled ring.

5-6675-31 2-14/2-22

Figure 2-22. Eyepiece prism assembly installation

WARNING

Severe eye damage can result from performing observations against direct sunlight if the black eyepiece filter is not used.

(6) If necessary, install black eyepiece filter (fig. 2-23).

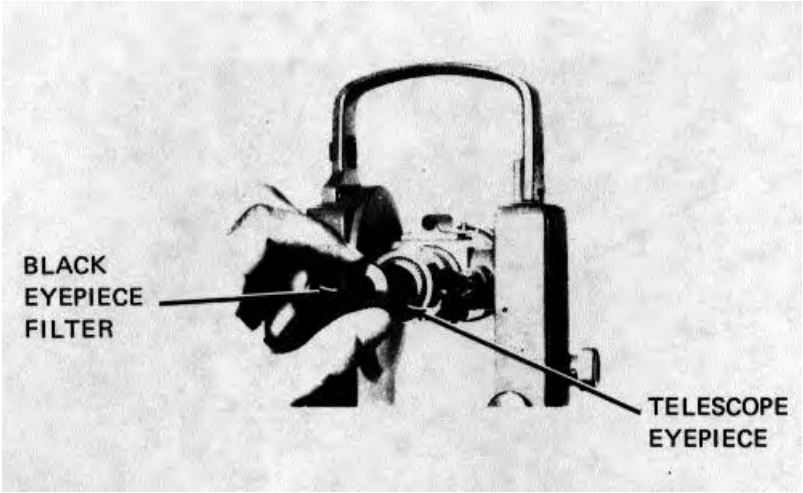

WARNING

Severe eye damage can result from performing observations against direct sunlight if the black eyepiece filter is not used. 5-6675-312-14/2-23

Figure 2-23. Black eyepiece filter installation.

(7) Center and level the theodolite.
(8) Focus the telescope as follows:

(a) Direct the telescope toward a uniformly lighted background. Adjust the telescope eyepiece (fig. 2-1) until the cross hairs are sharp and black.

NOTE

Observe the setting on the telescope eyepiece (fig. 2-1). This setting will remain constant for the same observer but will change for other observers.

(b) Adjust the focusing sleeve (fig. 2-1) to bring into view a clear, sharp image of the object being sighted.

(9) Loosen vertical and horizontal clamps (fig. 2-1) and sight theodolite on target using optical sight. Tighten vertical and horizontal clamps.
(10) Sighting through the telescope, adjust vertical and horizontal drive screws (fig. 2-1) to place cross hairs on target.

(11) Look into reading microscope eyepiece (fig. 2-1) and, if necessary, adjust position of illumination mirror (fig. 2-1) for maximum brightness. Observe both the vertical (V) and horizontal (Hz) circle reading scales indications (fig. 2-24).

Vertical (V) circle – 96° 06.5′ (96° 06′30″)

Horizontal (Hz) circle – 235° 56.4′ (235° 56′26″)

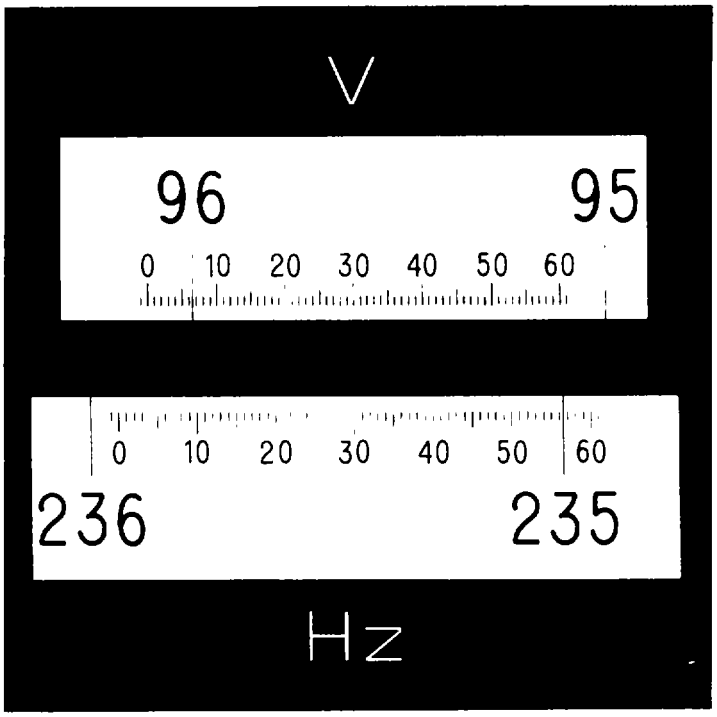

5-6675-312-14/2-24

Figure 2-24. Vertical and horizontal circle reading scales.

c. Autocollimation Eyepiece Operating Procedure.

(1) Install theodolite and tribrach assembly on tripod (fig. 2-10).
(2) Install the battery box assembly (fig. 3-1).
(3) Install the autocollimation eyepiece (fig. 3-4).
(4) Center and level the theodolite (para. 2-8a).
(5) Take the vertical and horizontal scale readings for the line of sight.
(6) Rotate the vertical and horizontal drive screws (fig. 2-1) until the telescope cross hairs and their reflected image are in exact coincidence (autocollimation) and read the vertical and horizontal circle reading scales again. The difference between the two sets of vertical and horizontal reading scales reading gives the angular deviations of the mirror, in V and Hz, from the plane perpendicular to the line of sight.

d. Circular Compass Assembly Operating Procedure.

(1) Install theodolite and tribrach assembly on tripod (fig. 2-10).

(2) If necessary, install the battery box assembly (fig. 3-1).

(3) If necessary, install the handlamp (fig. 3-2) or the plug-in lamp (fig. 3-3).

(4) If necessary, install black eyepiece filter (fig. 2-23).

(5) Center and level theodolite (para. 2-8a).

(6) Install circular compass assembly (fig. 3-5).

(7) Aline theodolite with known magnetic bearing using horizontal drive screw (19, fig. 2-1).

(8) Loosen clamp assembly (3, fig.2-2).

(9) While looking into eyepiece assembly (5, fig. 2-2), rotate eyepiece assembly to focus circular compass assembly heading indication.

(10) Rotate spring loaded knob (2, fig. 2-2) counterclockwise and hold.

(11) Rotate compass housing (4, fig. 2-2), while viewing compass heading through eyepiece assembly (5, fig. 2-2), until circular compass assembly is at known magnetic bearing.

(12) Release spring loaded knob (2, fig. 2-2).

NOTE

In order that the circular compass assembly pivot friction will always act in the same direction the last half turn of the horizontal drive screw (19, fig. 2-1) should always be made in the clockwise direction.

(13) All subsequent reading will be magnetic bearings.

(14) The metal circle (6, fig. 2-2) around the base of the circular compass assembly carries a short scale. This metal circle can be moved independently of both the compass base and housing, provided that the three screws underneath the compass base are loosened. With the three screws loosened, rotate the metal circle so that the zero of the scale or the amount of local declination is alined with the index mark underneath the

eyepiece assembly and then tighten the three screws. By means of this metal circle scale, the compass can always be set correctly in relation to the theodolite. If the declination changes or if it is necessary to set the circular compass assembly to some other reference direction, the compass housing (4, fig. 2-2) can be turned against the metal circle (6, fig. 2-2) scale.

e. Telescope Level Operating Procedure.

(1) Install theodolite and tribrach assembly on tripod (fig. 2-10).

(2) If necessary, install the battery box assembly (fig. 3-1).

(3) If necessary, install the handlamp (fig. 3-2) or the plug-in lamp (fig. 3-3).

(4) If necessary, install the black eyepiece filter (fig. 2-23).

(5) Install telescope level (fig. 3-6).

(6) Center and level the theodolite (para. 2-8a).

(7) While observing the split bubble indicator in the telescope level (fig. 3-6) adjust the vertical drive screw (fig. 2-1) until the ends of the split bubble are in coincidence.

12-9. PREPARATION FOR MOVEMENT

a. Dismantling for Movement.

(1) Short distances. For short distances in cleared, level areas, the operator may carry the theodolite and tribrach assembly mounted on the tripod. If the equipment is carried while mounted on the tripod, the operator should not carry it in any position other than upright.

CAUTION

Exercise care when moving the theodolite mounted on tripod. Handle the equipment carefully. Never subject it to bumps, jars, or shocks. Never leave the equipment unattended for long periods of time unless it is returned to the carrying case. Never carry the equipment over the shoulder.

(2) Long Distances.

(a) When the equipment must be moved for long distances or over rough terrain, the equipment should be transported in the carrying case (fig. 2-7). To prepare the equipment for movement proceed as follows:

1 If necessary, remove any installed accessory items from theodolite and tripod.
2 Loosen central fixing screw (fig. 2-10) and remove theodolite and tribrach assembly from tripod.
3 Place theodolite and tribrach assembly (fig. 2-8) on metal carrying case base and secure in place with levers.
4 Place metal carrying case hood (fig. 2-7) on base and secure with two lock levers.
5 If necessary, place plumbbob assembly (fig. 2-9) in tripod accessory case.
6 Place head cover (fig. 2-9) on tripod head.
7 Loosen three wing screws (fig. 2-9) and shorten legs.
8 Fold up tripod (fig. 2-11) and secure with leg strap.

(b) Handle the metal carrying case carefully to avoid sudden jolts, continued vibration, or other shocks that might damage the delicate parts of the equipment.

(c) Do not drop the metal carrying case into a vehicle or on the ground during transportation.

NOTE

If the carrying case is accidentally dropped, the equipment should be thoroughly inspected for damage.

(d) If the equipment is to be carried long distances by manpower, the rucksack (fig. 2-15) should be utilized.

b. Reinstallation After Movement. Refer to paragraph 2-6 for assembly and preparation for use.

Section IV. OPERATION UNDER UNUSUAL CONDITIONS

2-10. GENERAL This section contains the instructions to obtain optimum performance of the equipment under unusual operating conditions.

2-11. OPERATION UNDER UNUSUAL CONDITIONS

a. Operation in Extreme Cold (Below 0°F.) (-18°C.) With proper precautions and servicing, the equipment can be used in extreme cold. Its use is limited only by the endurance of operating personnel and conditions affecting visibility. The equipment should be kept out-of-doors or in unheated buildings for short periods of nonuse. Extreme temperature changes will induce internal stresses affecting accuracy and lenses, and prisms may become fogged.

CAUTION

Avoid subjecting the equipment to sudden changes in temperature.

b. Operation in Extreme Heat. Operation of the equipment in extreme heat and under the direct rays of the sun can cause internal stresses and distortion in the equipment and produce poor sightings because of heat waves. If possible, the

equipment and the operator should be protected from the direct sunlight by an umbrella or other suitable means. Under these conditions, shorter sightings will decrease the amount of sighting errors. Taking sightings during early morning and late evening will also minimize error magnitude. The use of suitable dark glasses by the operator will reduce eyestrain and fatigue. If the equipment is kept in cool storage place, it should be removed from storage in sufficient time before use to allow the temperature of the metal to approach that of the outside air.

c. Operation in Dusty or Sandy Areas. Special care must be given equipment which is being used in dusty or sandy areas, since both dust and sand are highly abrasive. If dust and sand are allowed to remain on threaded or sliding surfaces, moving parts of the equipment will soon bind and the equipment will become inaccurate or inoperable. The equipment should be brushed frequently with the dust brush and carefully wiped clean with a soft lint-free cloth. Be extremely careful not to scratch lens and prism surfaces during cleaning operations. Always protect the equipment from blowing dust and sand. Place the dust/rain cover over the theodolite when it is not in use.

d. Operation Under Rainy or Humid Conditions. In humid areas, a slight lowering of the temperature will cause condensation of moisture and fogging of lenses and prisms. Internal fogging can usually be removed by placing the equipment in a warm, dry place. Corrosion caused by high humidity can be partially eliminated by using warm, dry storage areas and desiccants. After use, dry the equipment thoroughly with a soft, lint-free cloth. Place the dust/rain cover over the theodolite when it is not in use.

e. Operation in Salt Water Areas. When operating the equipment in salt water areas, wipe the instrument frequently with a soft lint-free cloth. If the equipment is exposed to direct salt spray, it should be cleaned thoroughly and should be

returned to an instrument shop for overhauling as soon as possible. Cleaning intervals should be shorted considerably for equipment subjected to salt air exposure. Salt is highly corrosive to metal.

f. Operation in Snow. Visibility is sharply reduced while snow is falling. When taking sightings after a snowfall, the use of suitable dark glasses by the instrument man will reduce eyestrain and fatigue. If snow conditions are accompanied by extreme cold (below 0°F.) (-18°C.), refer to paragraph 2-11a. Place dust/rain cover over theodolite when it is not in use.

g. Operation in Mud. Mud is highly abrasive and if allowed to remain on threaded or sliding surfaces, moving parts of the equipment will soon bind and the equipment will become inaccurate or inoperable. The equipment should be carefully wiped clean with a soft, lint-free cloth. Be extremely careful not to scratch lens and prism surfaces during cleaning operations. Place the dust/rain over the theodolite when not in use. When the tripod is set up on muddy ground, leveling is extremely important and should be checked frequently. Anchor tripod legs firmly to avoid slippage which will cause incorrect readings.

h. Operation at High Altitudes. No special procedures are required to operate the equipment at high altitudes.

CHAPTER 3

OPERATOR MAINTENANCE INSTRUCTIONS

Section I. LUBRICATION INSTRUCTIONS

(There are no operator lubrication requirements.)

Section II. TROUBLESHOOTING PROCEDURES

(There are no operator troubleshooting procedures.)

Section III. MAINTENANCE PROCEDURES

3-1. GENERAL Operator maintenance is limited to installing the battery box assembly, handlamp, plug-in lamp, autocollimation eyepiece, circular compass assembly, telescope level, and tribrach assembly, and servicing the tripod.

3-2. INSTALLATION

a. Battery Box Assembly. To install the battery box assembly on the tripod refer to figure 3-1.

b. Headlamp. To install the headlamp refer to figure 3-2.

c. Plug-in Lamp. To install the plug-in lamp refer to figure 3-3.

d. Autocollimation Eyepiece. To install the autocollimation eyepiece refer to figure 3-4.

e. Circular Compass Assembly. To install the circular compass assembly refer to figure 3-5.

f. Telescope Level. To install the telescope level refer to figure 3-6.

g. Tribrach Assembly. To install the tribrach assembly on the theodolite refer to figure 3-7.

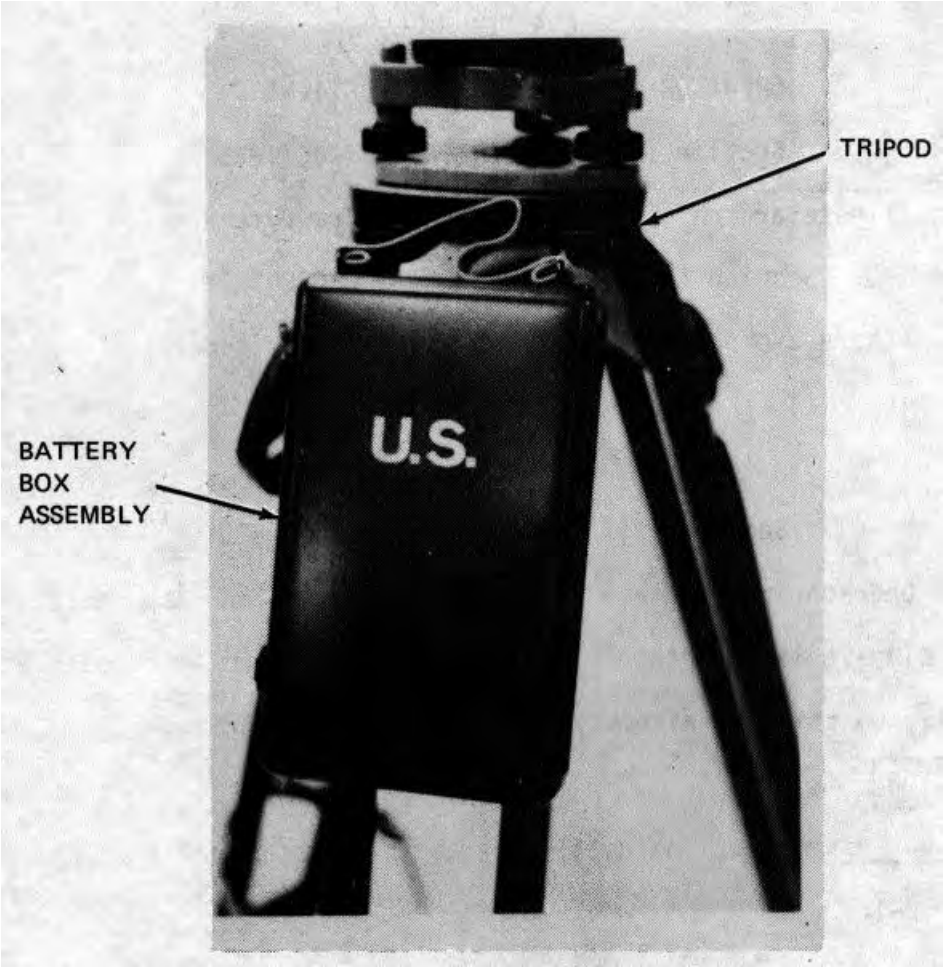

STEP 1. Hook battery assembly on tripod leg holder.

5-6675-312-14/3-1

Figure 3-1. Battery box assembly installation

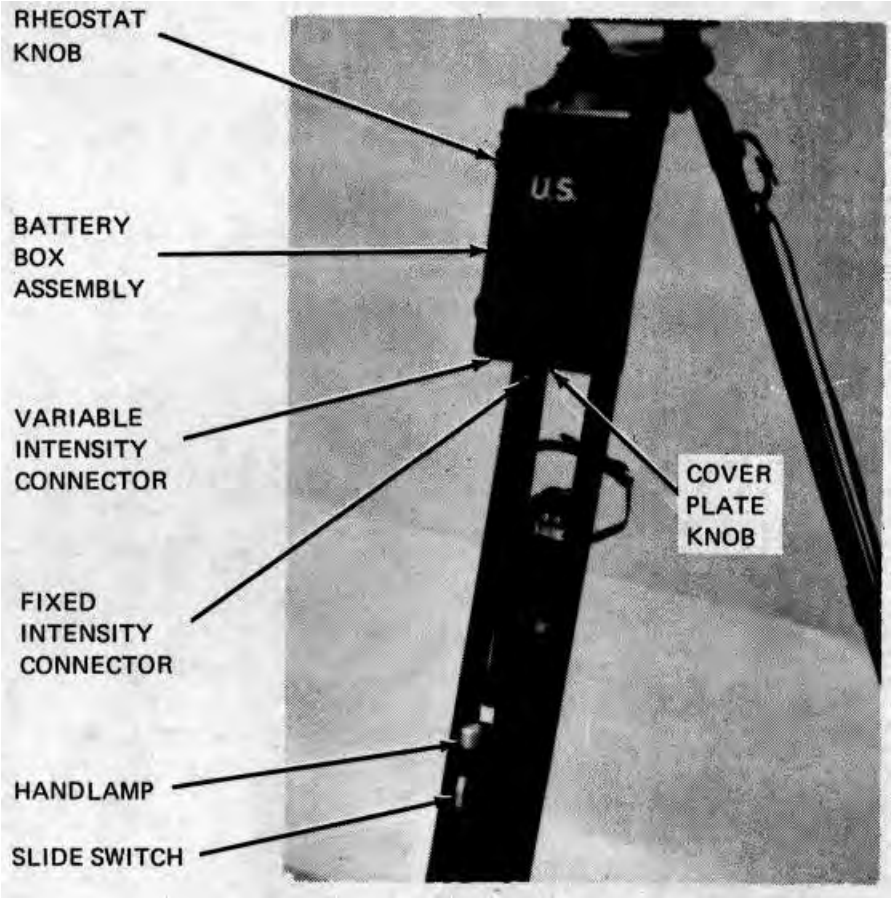

STEP 1. Slide cover plate knob to the left and insert handlamp connector to battery box assembly fixed intensity connector.

STEP 2. Slide handlamp slide switch forward to turn on handlamp.

56675-312-14/3-2

Figure 3-2. Handlamp installation.

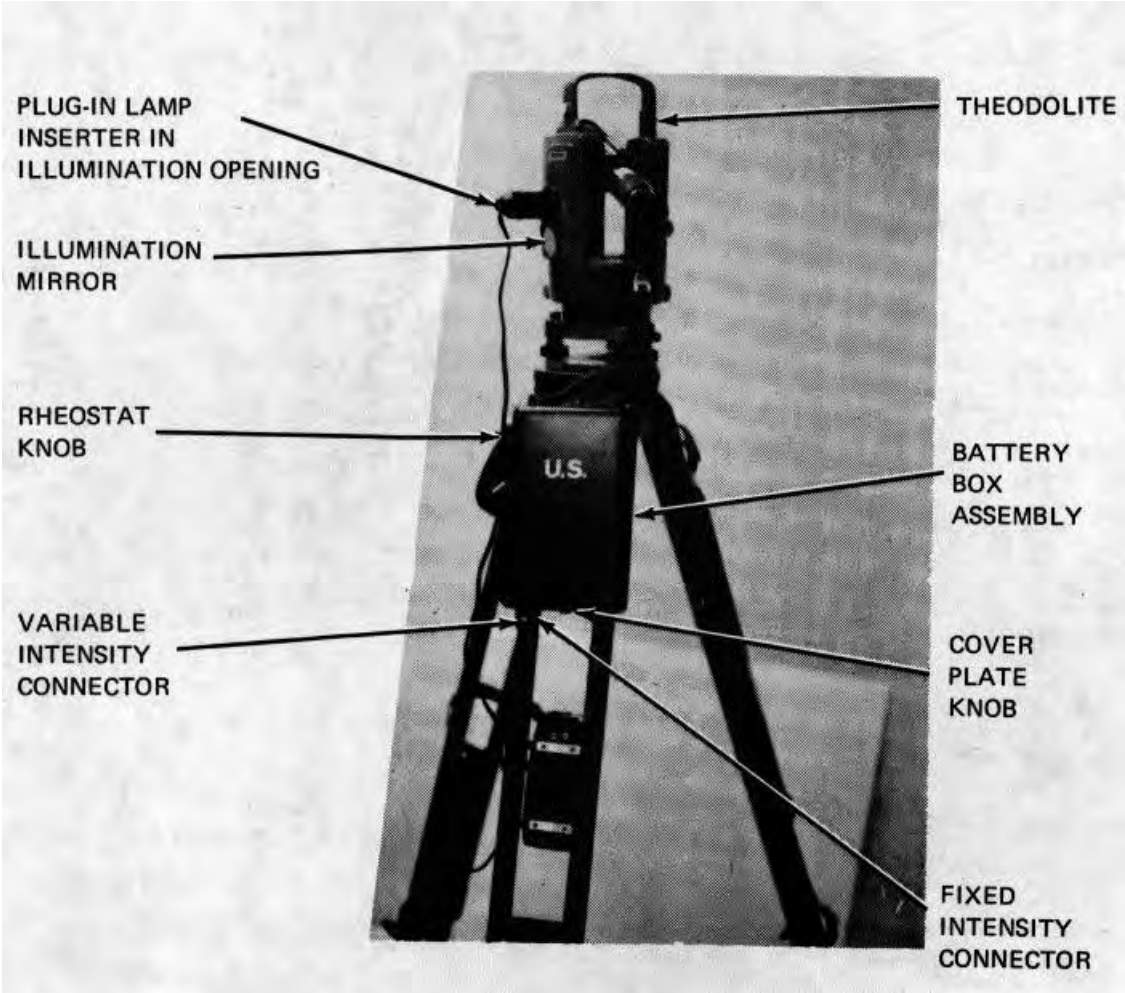

STEP 1. Insert plug-in lamp into theodolite illumination opening.

STEP 2. Slide cover plate knob to left and insert plug-in lamp connector to battery box assembly variable intensity connector.

STEP 3. Rotate battery box assembly rheostat knob clockwise to turn on and control the intensity of the plug-in lamp.

546675-312-14/3-3

Figure 3-3. Plug-in lamp installation.

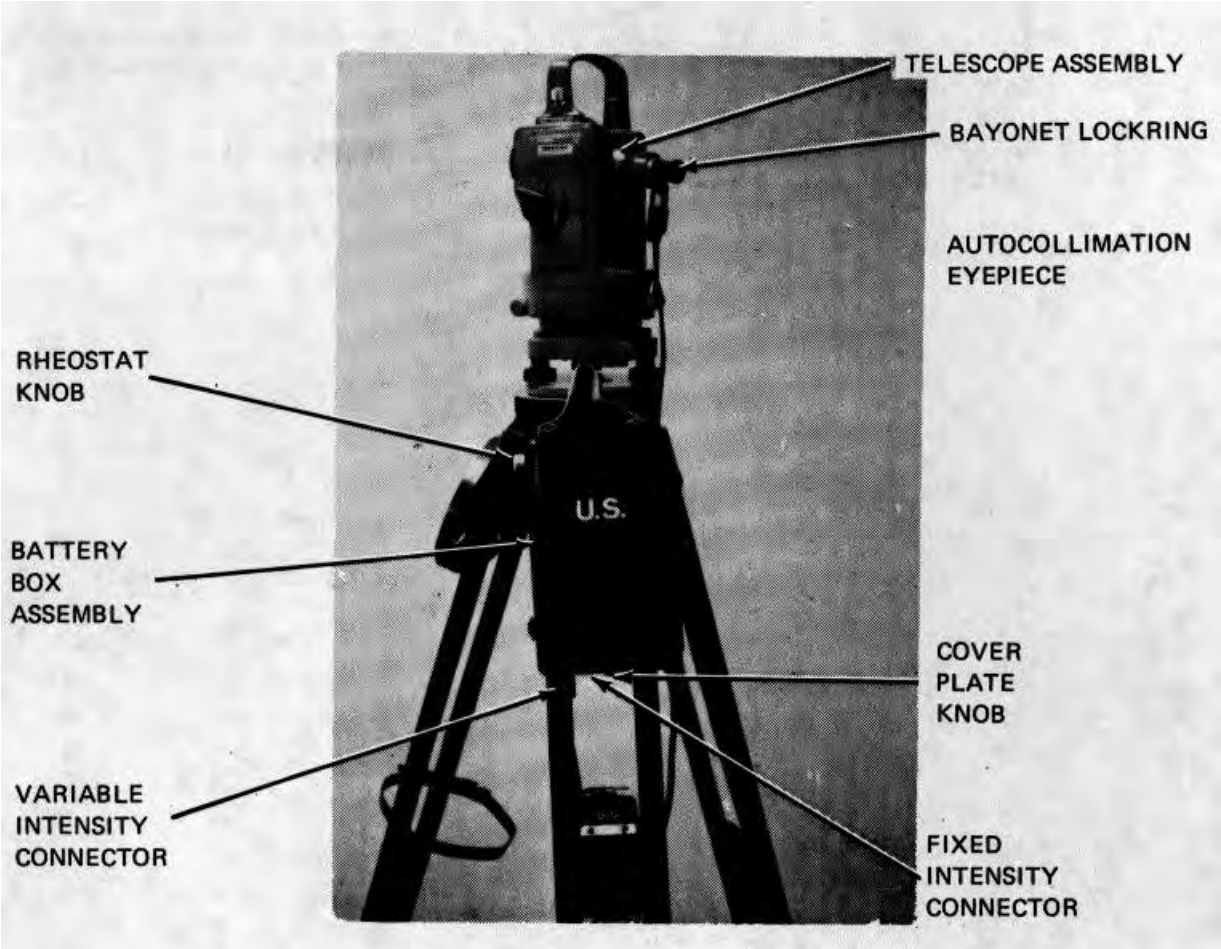

STEP 1. Rotate bayonet lockring counterclockwise and remove eyepiece.

STEP 2. Insert autocollimation eyepiece into telescope assembly insuring that the autocollimation eyepiece pin engages the notch in the telescope assembly. Rotate bayonet lockring clockwise to lock autocollimation eyepiece to telescope assembly.

STEP 3. Slide cover plate knob to left and insert autocollimator eyepiece connector to battery box assembly variable intensity connector.

STEP 4. Rotate the battery box assembly rheostat knob clockwise to turn on and control the intensity of the autocollimation eyepiece lamp.

5-6675-312-14/34

Figure 3-4. Autocollimation eyepiece installation.

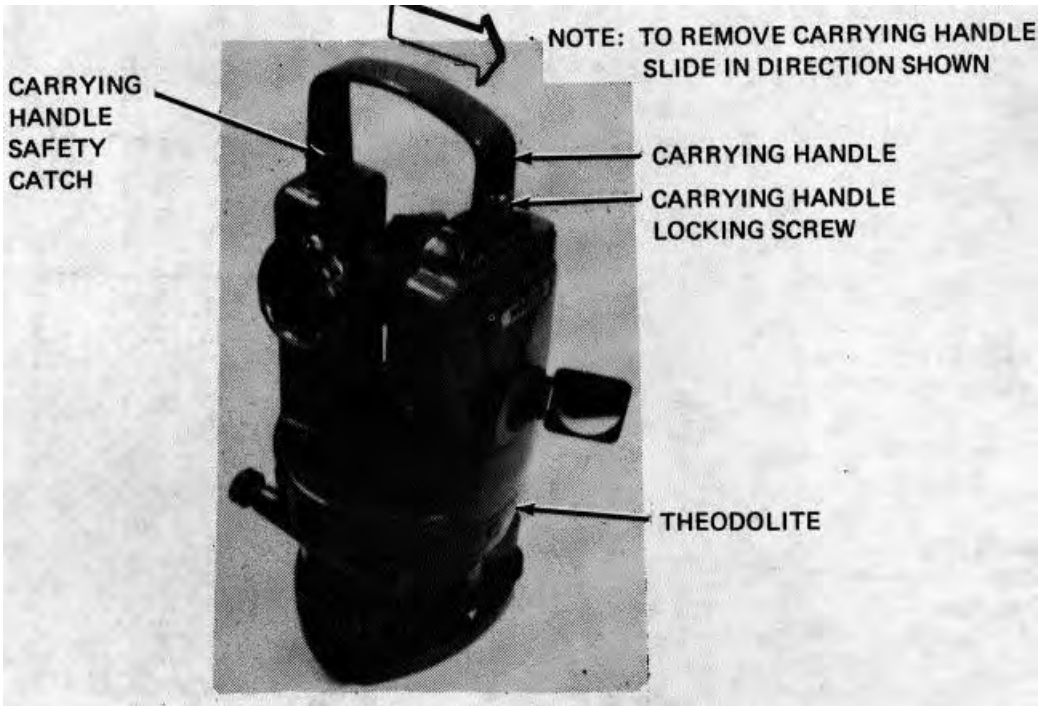

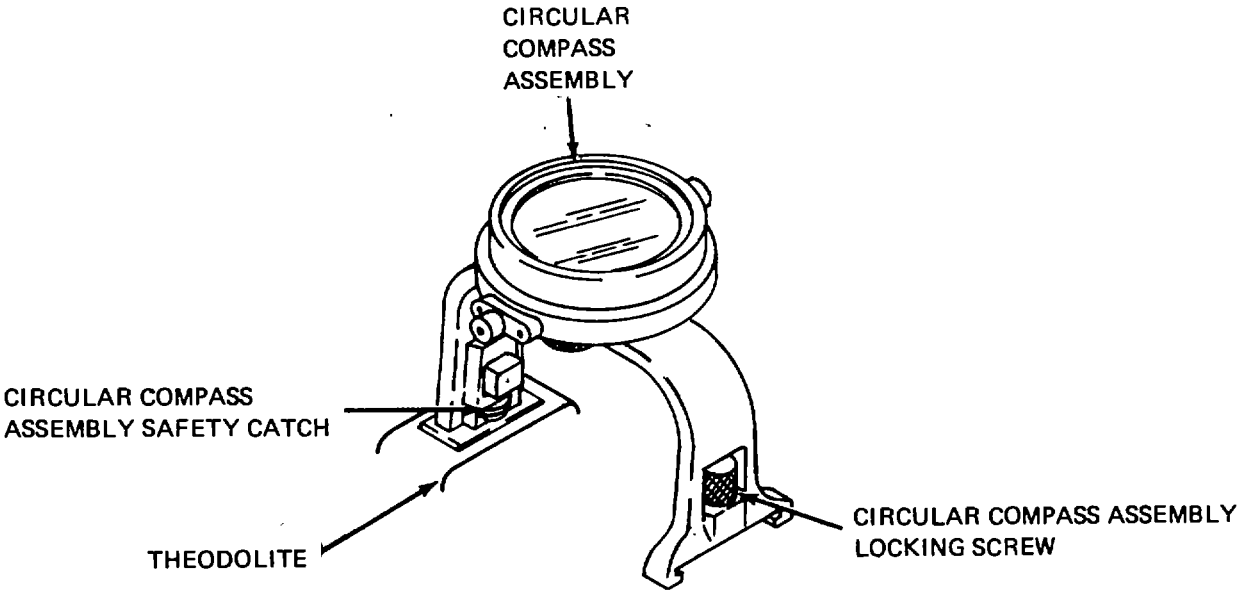

STEP 1. Loosen carrying handle locking screw.

STEP 2. Release carrying handle safety catch and remove carrying handle from theodolite.

STEP 3. Slide circular compass assembly on theodolite insuring that circular compass assembly safety catch engages.

STEP 4. Tighten circular compass assembly locking screw.

5-6675-312-14/3-5

Figure 3-5. Circular compass assembly installation.

STEP 1. Center and level theodolite (para. 2-8).

STEP 2. Rotate telescope so that optical sight is on bottom.

STEP 3. Remove four screws that will secure telescope level to telescope assembly.

STEP 4. Secure telescope level to telescope assembly with four screws.

STEP 5. Setup a vertical staff approximately 50 yards (or 50 meters) from theodolite.

NOTE

"Face right" is defined as, when the illumination mirror is on the right the viewer can look into the telescope eyepiece (fig. 2-1). "Face left" is defined as, when the illumination mirror is on the left the viewer can look into the telescope eyepiece.

STEP 6. Place theodolite in "face left".

STEP 7. Using the vertical drive screw (fig. 2-1) set the vertical circle reading scale (V) to 90 **°** 00.0' as indicated in reading microscope eyepiece.

STEP 8. Viewing through the telescope eyepiece (fig. 2-1) note where the horizontal cross hair cuts the vertical staff.

STEP 9. Place the theodolite in "face right".

STEP 10. Using the vertical drive screw (fig. 2-1) set the vertical circle reading scale (V) to 270° 00.0' as indicated in the reading microscope eyepiece.

STEP 11. Viewing through the telescope eyepiece (fig. 2-1) note where horizontal cross hair cuts the vertical staff.

STEP 12. Using the vertical drive screw (fig. 2-1) set telescope eyepiece cross hair to the mean (center) of readings noted in steps 7 and 9.

STEP 13. Using adjusting pin, adjust telescope level until the ends of the split bubble are in coincidence.

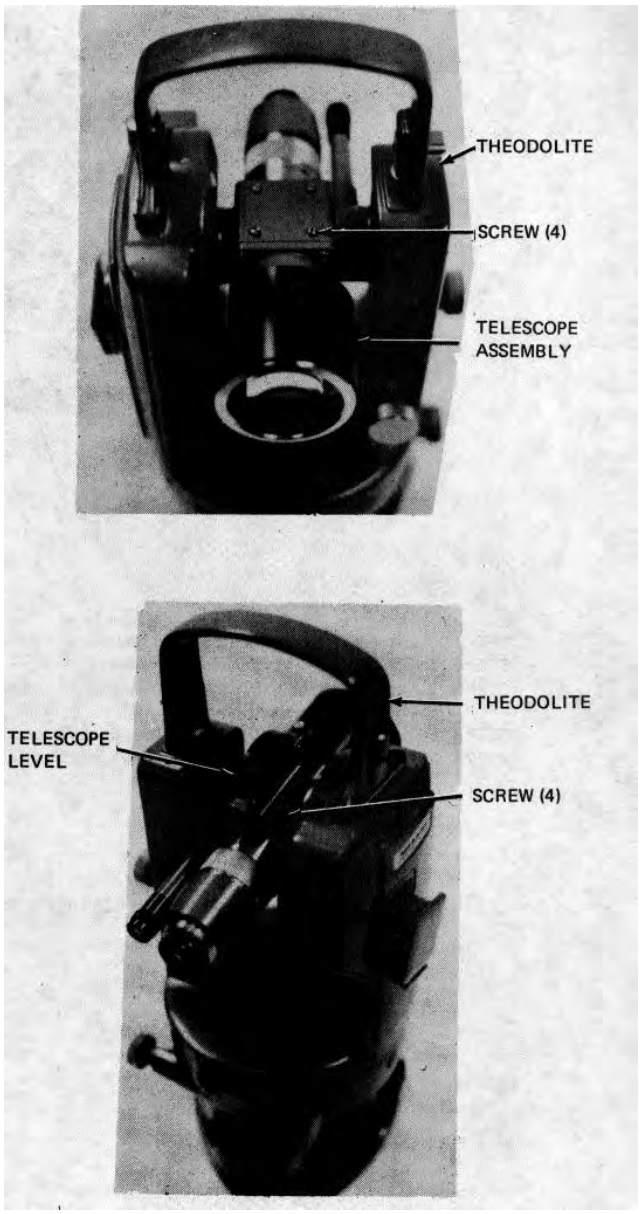

Figure 3-6. Telescope level installation.

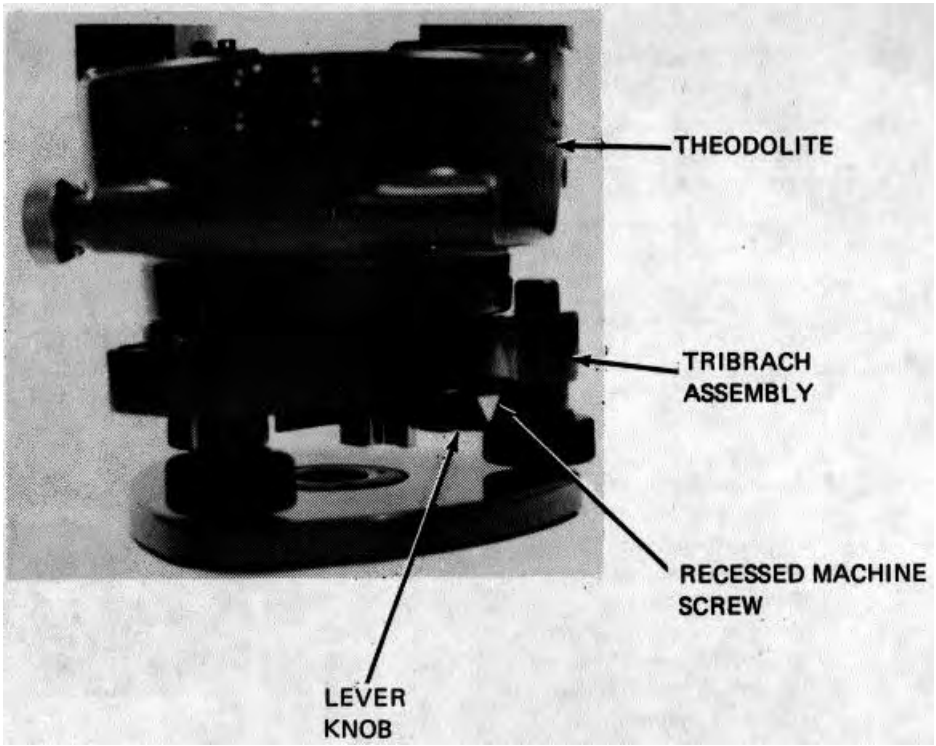

STEP 1. Insure that recessed machine screw is screwed all the way in to release lever knob.

STEP 2. Rotate lever knob so that arrow on lever knob points upward.

STEP 3. Lower theodolite into tribrach assembly insuring that three studs of base plate pass through the holes in the tribrach assembly.

STEP 4. Rotate lever knob so that arrow on lever knob points down.

STEP 5. Unscrew recessed machine screw to secure lever knob.

5-675-312-14/3-7

Figure 3-7. Tribrach assembly installation.

3-3. SERVICING. Servicing consists of cleaning and painting the tripod.

a. Cleaning. To clean the tripod, proceed as follows.

WARNING

Dry cleaning solvent, P-D-680, used to clean parts is potentially dangerous to personnel and property. Avoid repeated and prolonged contact with skin. Do not use near open flame or excessive heat. Flash point of solvent is 100F. 138°F (38°C.-59°C.) Do not use P-D-680 to clean lens.

(1) Clean all metal parts with dry cleaning solvent and dry thoroughly.
(2) Clean all wooden parts with a soft cloth moistened with water and dry thoroughly.
(3) Clean the strap with saddle soap.

b. Painting. If necessary, paint normally painted surfaces in accordance with MIL-T-704, Type B. The theodolite contact surface of the tripod head and threaded portion of the central fixing screw shall not be painted.

CHAPTER 4

ORGANIZATIONAL MAINTENANCE INSTRUCTIONS

Section I. REPAIR PARTS, SPECIAL TOOLS, TMDE AND SUPPORT EQUIPMENT

4-1. COMMON TOOLS AND EQUIPMENT. For authorized common tools and equipment refer to the Modified Table of Organization and Equipment (MTOE) applicable to your unit.

4-2. SPECIAL TOOLS, TMDE, AND SUPPORT EQUIPMENT. There are no special tools, TMDE, or support equipment required for organizational support maintenance.

4-3. REPAIR PARTS. Repair parts are listed and illustrated in the repair parts and special tools list, TM5-6675-312-24P, covering organizational maintenance for this equipment.

Section II. SERVICE UPON RECEIPT

4-4. SITE REQUIREMENTS. There are no special site requirements required for the equipment.

4-5. SERVICE UPON RECEIPT

a. Unpacking. To unpack the equipment refer to paragraph 2-6a.
b. Checking Unpacked Equipment.

(1) Inspect the equipment for damage incurred during shipment. If the equipment has been damaged, report the damage on DD Form 6, Packaging Improvement Report.
(2) Check the equipment against the packing slip to see if the shipment is complete. Report all discrepancies in accordance with the instructions of TM 38-750.
(3) Check to see whether the equipment has been modified.

c. Deprocessing Unpacked Equipment. There are no special instructions required to deprocess the unpacked equipment.

4-6. INSTALLATION INSTRUCTIONS.

a. Tools, Test Equipment, and Materials Required for Installation. Other than the screwdriver, adjusting pin, and tripod allen wrench no other tools, test equipment or materials are required for installation.

b. Assembly of Equipment. To assemble the equipment refer to paragraph 2-6b.

c. Installation Instruction. To install the various major items on the equipment refer to paragraph 3-2.

Section III. PREVENTIVE MAINTENANCE CHECKS AND SERVICES

4-7. INTRODUCTION. This section contains the organizational maintenance level preventive maintenance checks and services.

4-8. PREVENTIVE MAINTENANCE CHECKS AND SERVICES. Table 4-1 lists the preventive maintenance checks and services.

Table 4-1. Preventive Maintenance Checks and Services

W - Weekly Q - Quarterly A - Annually

M - Monthly S - Semiannually

ITEM NO.	INTERVAL					ITEM TO BE INSPECTED	PROCEDURES
	W	M	Q	S	A		
1	▪					Shipping case	Inspect shipping case for cracks, dents, defective hinges and hasp.
2	▪					Metal carrying case	Inspect metal carrying case hood and base for dents, cracks, and rust. Inspect

Table 4-1. Preventive Maintenance Checks and Services (cont)

ITEM NO.	INTERVAL					ITEM TO BE INSPECTED	PROCEDURES
	W	M	Q	S	A		
							clamps and carrying strap for defects. Inspect desiccant for discoloration. Desiccant should be blue in color.
3						Theodolite and tribrach assembly	Inspect theodolite and tribrach assembly for broken or missing parts, cracked or scratched lenses, loose or missing hardware, and other indications of damage. Rotate the tribrach assembly foot-screw assemblies and inspect for rough travel and in-stability. Inspect the hori-zontal and vertical drive screws and the horizontal and vertical clamps for proper operation. Inspect the telescope eyepiece, reading microscope eyepiece, and focusing sleeve for proper operation and smooth operation throughout their full travel.

Table 4-1. Preventive Maintenance Checks and Services (cont)

ITEM NO.	INTERVAL					ITEM TO BE INSPECTED	PROCEDURES
	W	M	Q	S	A		
4	·					Tripod	Inspect tripod for damaged or missing parts and loose or missing hardware. Insure that plumbbob and allen wrench are contained in the accessory case and are in serviceable condition.
5	·					Accessory case	Inspect the accessory case for damaged or defective zipper and snaps. Insure that the accessory case contains the items shown in figure 2-13. Inspect the black eyepiece filter and autocollimation eyepiece for scratches, cracks, and defective mounting. Inspect plug-in lamp and autocollimation eyepiece for broken glass, corroded or defective contacts, and defective wires.

Table 4-1. Preventive Maintenance Checks and Services (cont)

ITEM NO.	INTERVAL					ITEM TO BE INSPECTED	PROCEDURES
	W	M	Q	S	A		
							Inspect telescope level for broken or cracked glass, cracks and rust.
6	•					Battery box assembly	Inspect battery box assembly for damage, rust and defective clamps and carrying handle. Insure that battery box assembly contains the items shown in figure 2-14. Rotate the rheostat knob through its full travel and verify that the movement is smooth and free of binding. Inspect all electrical contacts for loose connections and corrosion. Inspect handlamp for broken housing, defective slide switch, insecure or damaged plug, and frayed or cracked insulation. Inspect connecting cable for insecure

Table 4-1. Preventive Maintenance Checks and Services (cont)

ITEM NO.	INTERVAL					ITEM TO BE INSPECTED	PROCEDURES
	W	M	Q	S	A		
							or damaged plugs and frayed or cracked insulation.
7	▪					Rucksack	Inspect rucksack for damaged straps, insecure or defective buckles, torn padding, and tears or cuts.
8	▪					Eyepiece prism assembly	Inspect case for defective snap and carrying strap. Inspect eyepiece prism assembly for scratches, cracks and defective mounting.
9	▪					Sunshade	Inspect sunshade for dents or cracks.
10	▪					Circular compass assembly	Inspect circular compass assembly case for damage and defective zipper. Inspect circular compass assembly safety catch and locking screw for proper operation. Inspect for scratched and broken glass

Table 4-1. Preventive Maintenance Checks and Services (cont)

ITEM NO.	INTERVAL					ITEM TO BE INSPECTED	PROCEDURES
	W	M	Q	S	A		
							and damaged pivot. Inspect spring loaded knob for defective operation. Inspect clamp assembly for defective operation. Inspect eyepiece assembly for scratches, cracks, and defective operation.

Section IV. TROUBLESHOOTING

4-9. GENERAL

a. This section contains troubleshooting or malfunction information and tests for locating and correcting most of the troubles which may develop in the theodolite. Each malfunction or trouble symptom for an individual component, unit, or system is followed by a list of tests or inspections necessary for you to determine probable causes and suggested corrective actions for you to remedy the malfunction.

b. This manual cannot list all possible malfunctions that may occur or all tests or inspections, and corrective actions. If a malfunction is not listed, or is not corrected by listed corrective actions, you should notify higher level maintenance.

4-10. TROUBLESHOOTING. Table 4-2 lists the common malfunctions that you may find during the operation or maintenance of the theodolite or its components. You should perform the tests/inspections and corrective actions in the order listed.

NOTE
If you have a malfunction which is not listed in this table, notify the next higher level of maintenance.

Table 4-2. Troubleshooting

MALFUNCTION TEST OR INSPECTION CORRECTIVE ACTION
THEODOLITE AND TRIBRACH ASSEMBLY
1. THEODOLITE AND TRIBRACH ASSEMBLY WILL NOT SEAT PROPERLY ON TRIPOD HEAD
Step 1. Check alinement of the central fixing screw. Restart central fixing screw (see fig. 2-5).
Step 2. Inspect tribrach assembly for defects. Replace defective tribrach assembly (see fig. 2-1).
Step 3. Tripod head defective. Replace tripod.
2. THEODOLITE AND TRIBRACH ASSEMBLY WILL NOT STAY ON LINE
Step 1. Check theodolite and tribrach assembly leveling (fig. 2-21). Replace theodolite and tribrach assembly.
3. LIGHTS ON VERTICAL AND HORIZONTAL CIRCLES UNEQUAL OR ABSENT
Step 1. Plug-in lamp defective. Repair plug-in lam (see fig. 3-3).
Step 2. Batteries defective. Replace batteries (see fig. 2-14).
Step 3. Illuminating mirror defective. Replace theodolite.
4. TRIPOD LEG WILL NOT LOCK IN POSITION
Leg clamping screws loose. Tighten screws (see fig. 4-7).

Table 4-2. Troubleshooting (cont)

MALFUNCTION TEST OR INSPECTION CORRECTIVE ACTION
THEODOLITE AND TRIBRACH ASSEMBLY
5. HORIZONTAL AND/OR VERTICAL DRIVE SCREWS
Horizontal and/or vertical screw assemblies defective.
Replace theodolite.
6. FOOTSCREWS TOO TIGHT OR LOOSE
Footscrews defective.
Replace tribrach assembly (see fig. 2-1).
7. THEODOLITE TURNS TOO HARD
Horizontal clamp not fully released.
Release horizontal clamp (see fig. 2-1).
8. TELESCOPE ASSEMBLY TURNS TOO HARD
Vertical clamp not fully released.
Release vertical clamp (see fig. 2-1).

Section V. MAINTENANCE PROCEDURES

4-12. SHIPPING CASE-MAINTENANCE INSTRUCTIONS

This task covers:

a. Inspection

LOCATION	ITEM	ACTION	REMARKS
INSPECTION			
Shipping case	Shipping case	a. Inspect for cracks, dents, defective hinges and hasp.	Replace defective shipping case.

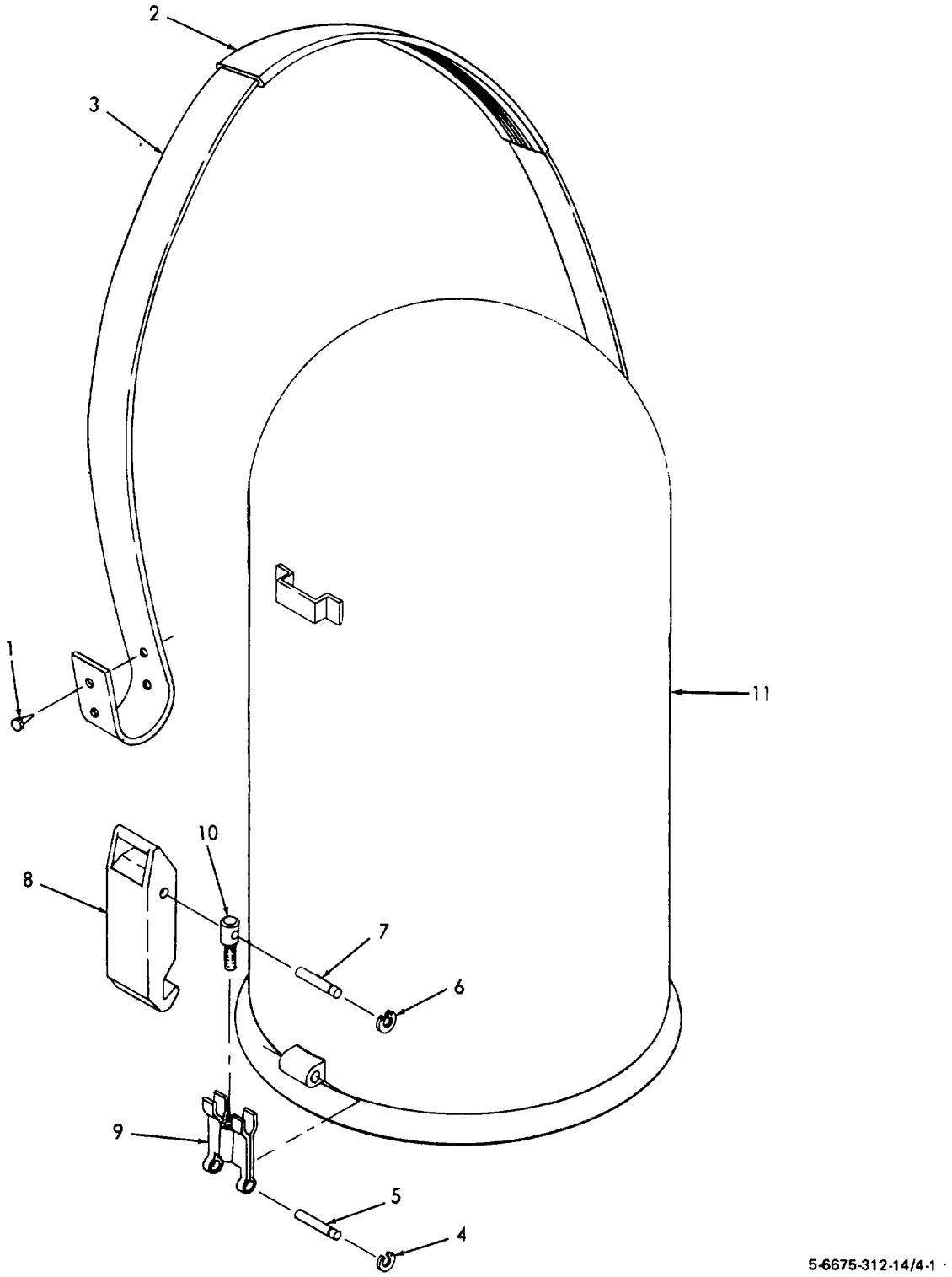

Figure 4-1. Metal carrying case metal hood, disassembly and assembly.

KEY for fig. 4-1:

1.	Rivet (4)	6.	Snap ring (s)
2.	Sleeve	7.	Axis (2)
3.	Carrying straps	8.	Lock clamp (2)
4.	Snap ring (2)	9.	Lock lever (2)
5.	Axis (2)	10.	Setscrew (2)
		11.	Metal hood

4-13. METAL CARRYING CASE HOOD - MAINTENANCE INSTRUCTIONS

This task covers:

a. Removal
b. Disassembly
c. Cleaning, Inspection, and Repair
d. Reassembly
e. Installation

LOCATION	ITEM	ACTION	REMARKS
REMOVAL			
1. Metal carrying case	Hood	Removal	Refer to fig. 2-7.

4-13. METAL CARRYING CASE HOOD - MAINTENANCE INSTRUCTIONS (cont)

LOCATION	ITEM	ACTION	REMARKS
DISASSEMBLY			
2. Metal carrying case	Hood	Disassemble	Refer to fig. 4-1. Disassemble in sequence of key numbers.

CLEANING, INSPECTION, AND REPAIR

WARNING

Dry cleaning solvent, P-D-680, used to clean parts is potentially dangerous to personnel and property. Avoid repeated and prolonged skin contact. Do not use near open flame or excessive heat. Flash point of solvent is 100F.-1380F. (380C. 590C.) Do not use P-D-680 to clean lens.

LOCATION	ITEM	ACTION	REMARKS
3. Metal carrying case	Hood	a. Clean all metal parts with cleaning solvent and dry thoroughly.	
		b. Clean the carrying strap with saddle soap.	
		c. Inspect carrying strap for cracks, breaks, and cuts.	
		d. Inspect carrying strap for enlarged	

4-13. METAL CARRYING CASE HOOD - MAINTENANCE INSTRUCTIONS (cont)

LOCATION	ITEM	ACTION	REMARKS
		mounting holes and deterioration due to age.	
		e. Inspect axis for burrs and wear.	
		f. Inspect lock clamps and lock levers for burrs, bends, and cracks.	
		g. Inspect metal hood for dents, cracks, rust, and bottom rim out of round.	
		h. Remove burrs from lock clamps and lock levers. Remove rust and repaint where necessary.	
		i. Remove dents and bends in metal hood. Remove rust and repaint where necessary.	

4-13. METAL CARRYING CASE HOOD - MAINTENANCE INSTRUCTIONS (cont)

LOCATION	ITEM	ACTION	REMARKS
		j. Replace defective parts.	
REASSEMBLY			
4. Metal carrying case	Hood	Reassemble	Refer to fig. 4-1. Reassemble in reverse of key number sequence.
INSTALLATION			
5. Metal carrying	Hood	Install	Refer to figure 2-7 and reverse the procedure.

KEY for figure 4-2

1.	Setscrew (2)	14.	Lever arm
2.	Spring housing (2)	15.	Lock lever (2)
3.	Lock ring (2)	16.	Machine screw
4.	Spring washer (18)	17.	Spring clip
5.	Flat washer (2)	18.	Screwdriver
6.	Buffer (2)	19.	Adjusting pin (2)
7.	Spring loaded ball	20.	Machine screw
8.	Snap ring (4)	21.	Plate
9.	Axis (4)	22.	Machine screw
10.	Flat washer (8)	23.	Plate
11.	Bearing bolt (8)	24.	Plate
12.	Plate lever (8)	25.	Rubber gasket
13.	Lever arm	26.	Base

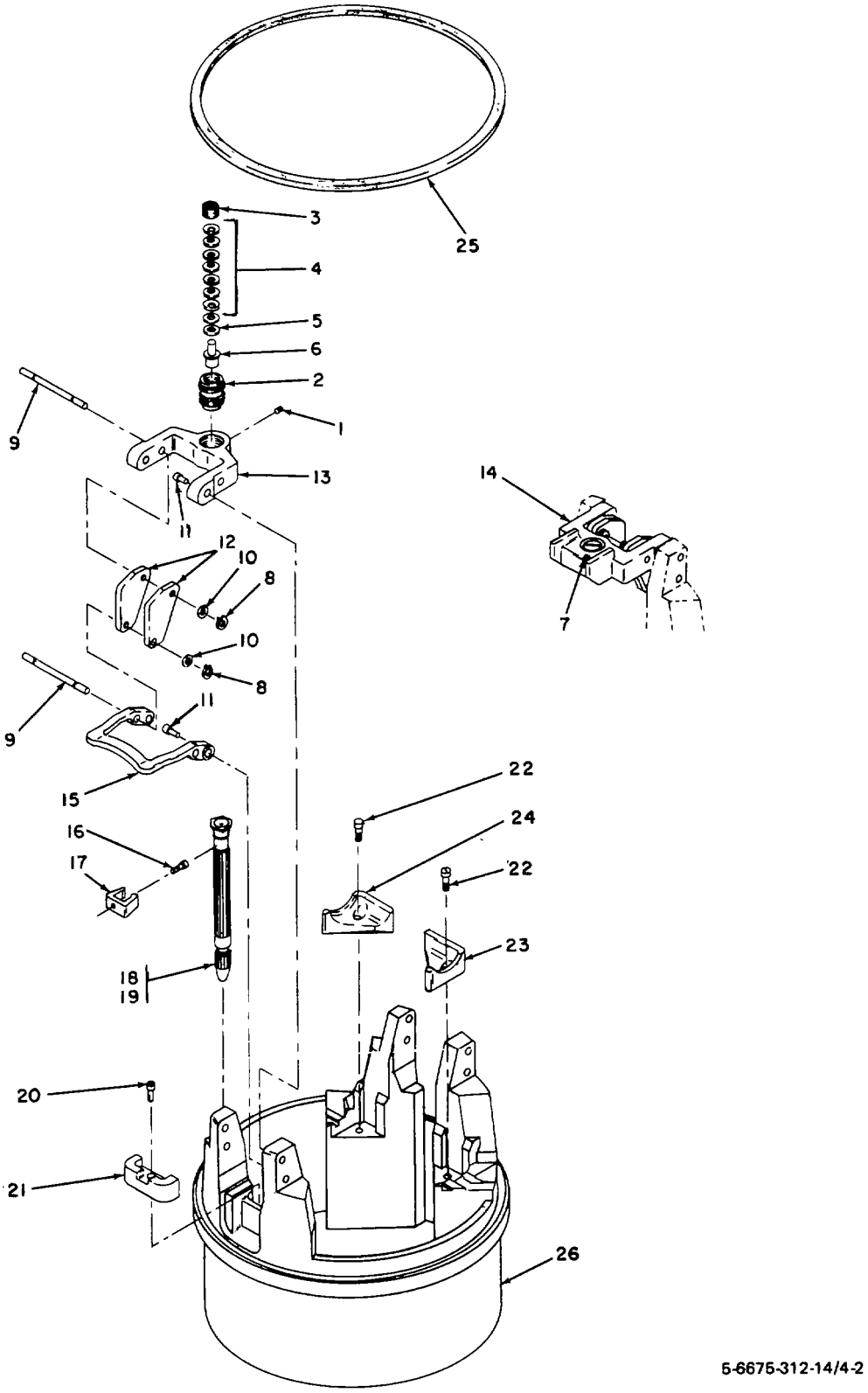

Figure 4-2. Metal carrying case base, disassembly and assembly.

4-14. METAL CARRYING CASE - BASE MAINTENANCE INSTRUCTIONS

This task covers:

a. Removal
b. Disassembly
c. Cleaning, Inspection, and Repair
d. Reassembly
e. Installation

LOCATION	ITEM	ACTION	REMARKS
REMOVAL			
1. Metal carrying case	Base	a. Remove hood.	Refer to figure 2-7.
		b. Remove theodolite and tribrach assembly from base.	Refer to figure 2-8.
DISASSEMBLY			
2. Metal carrying case	Base	Disassemble	Refer to figure 4-2. Disassemble in sequence of key numbers.

CLEANING, INSPECTION AND REPAIR

WARNING

Dry cleaning solvent, P-D-680, used to clean parts is potentially dangerous to personnel and property. Avoid repeated and prolonged skin contact. Do not use near open flame or excessive heat. Flash point of solvent is 100°F.-138°F. (38°C. 59°C.) Do not use P-D-680 to clean lens.

4-14. METAL CARRYING CASE BASE - MAINTENANCE INSTRUCTIONS (cont)

LOCATION	ITEM	ACTION	REMARKS
3. Metal carrying case	Base	a. Brush threaded surfaces free of any foreign matter.	
		b. Clean rubber gasket with clean, lint-free cloth.	
		c. Clean metal parts with approved cleaning solvent.	
		d. Inspect threaded surfaces for worn or damaged threads.	
		e. Inspect lever arms, lever locks, and washers for burrs and worn surfaces.	
		f. Inspect the base for cracks, scratches, and broken casting. Inspect the collar of the base for	

4-14. METAL CARRYING CASE BASE - MAINTENANCE INSTRUCTIONS (cont)

LOCATION	ITEM	ACTION	REMARKS
		bends, breaks, and out of round.	
		g. Inspect rubber gasket for nicks, cuts, distortion, and deterioration or hardening due to age or excessive heat.	
		h. Inspect desiccant for color. Serviceable desiccant is blue. Pink desiccant indicates moisture saturation, and desiccant must be dehydrated or replaced.	
		i. Remove all burrs, straighten bend.	
		j. Replace defective parts.	

4-14. METAL CARRYING CASE BASE - MAINTENANCE INSTRUCTIONS (cont)

LOCATION	ITEM	ACTION	REMARKS
REASSEMBLY			
4. Metal carrying case	Base	Reassemble	Refer to figure 4-2. Reassemble in reverse of key number sequence.
INSTALLATION			
5. Metal carrying case	Base	a. Install theodolite and tribrach assembly on base.	Refer to figure 2-8 and reverse the procedure.
		b. Install hood.	Refer to figure 2-7 and reverse the procedure.

4-15. RUCKSACK - MAINTENANCE INSTRUCTIONS

This task covers:

a. Cleaning and inspection

LOCATION	ITEM	ACTION	REMARKS
CLEANING AND INSPECTION			
1. Rucksack	Rucksack	a. Brush rucksack with a stiff brush to remove dust and dirt.	

4-15. RUCKSACK - MAINTENANCE INSTRUCTIONS (cont)

LOCATION	ITEM	ACTION	REMARKS
		b. Inspect for damaged straps, insecure or defective buckles, and tears or cuts.	
		c. Replace defective rucksack.	

4-16. ACCESSORY CASE - MAINTENANCE INSTRUCTIONS

This task covers:

a. Cleaning and Inspection

LOCATION	ITEM	ACTION	REMARKS
CLEANING AND INSPECTION			
1. Accessory case	Accessory case	a. Brush accessory case with a stiff brush to remove dust and dirt.	
		b. Inspect for defective zipper, tears and cuts.	
		c. Replace defective accessory case.	

4-17. ADJUSTING PINS AND SCREWDRIVER-MAINTENANCE INSTRUCTIONS

This task covers:

a. Removal
b. Cleaning and Inspection
c. Installation

4-17. ADJUSTING PINS AND SCREWDRIVER - MAINTENANCE INSTRUCTIONS (CONT)

This task covers:

a. Pre-Inspection **b. Removal** **c. Cleaning.**
c. Disassembly **e. Inspection** **g. Installation**

INITIAL SETUP

LOCATION	ITEM	ACTION	REMARKS
REMOVAL			
1. Accessory case	Adjusting pins and screwdriver	Remove from accessory case.	Refer to figure 2-13.
CLEANING AND INSPECTION			
		WARNING **Dry cleaning solvent, P-D-680, used to clean parts is potentially dangerous to personnel and property. Avoid repeated and prolonged skin contact. Do not use near open flame or excessive heat. Flash point of solvent is 100°F. 138°F. (38°C. 59°C.) Do not use P-D-680 to clean lens.**	
2. Accessory case	Adjusting pins and screwdriver	a. Clean with cleaning solvent and dry thoroughly. b. Inspect for nicks, burns, and corrosion. c. Remove nicks, burrs and corrosion. d. Replace defective parts.	
INSTALLATION			
3. Accessory case	Adjusting pins and screwdriver	Install adjusting pins and screwdriver in accessory case.	Refer to figure 2-13.

4-18. BLACK EYEPIECE FILTER - MAINTENANCE INSTRUCTIONS

This task covers:

a. Removal **b. Cleaning and Inspection** **c. Installation**

LOCATION	ITEM	ACTION	REMARKS
REMOVAL			
1. Accessory case	Black eye-piece filter	Remove from accessory case	Refer to figure 2-13.
CLEANING AND INSPECTION			
		WARNING **Dry cleaning solvent, P-D-680, used to clean parts is potentially dangerous to personnel and property. Avoid repeated and prolonged skin contact. Do not use near open flame or excessive heat. Flash point of solvent is 100°F. -138°F. (38°C.--59°C.) Do not use P-D-680 to clean lens.**	
2. Accessory case	Black eye-piece filter	a. Clean metal part with clean lint-free cloth mois-tened with clean-ing solvent. b. Clean lens with dust brush or lens tissue. c. Inspect metal part for cracks,	

4-18. BLACK EYEPIECE FILTER - MAINTENANCE INSTRUCTIONS (cont)

LOCATION	ITEM	ACTION	REMARKS
			scratches, and corrosion. d. Inspect lens for chips, cracks, scratches, and fungus etching. e. Replace defective black eyepiece filter.
INSTALLATION			
3. Accessory case	Black eye-piece filter	Install in accessory case	Refer to figure 2-13.

4-19. DUST BRUSH - MAINTENANCE INSTRUCTIONS

This task covers:
a. Removal **b. Inspection** **c. Installation**

LOCATION	ITEM	ACTION	REMARKS
REMOVAL			
1. Accessory case	Dust brush	Remove from accessory case	Refer to figure 2-13.
INSPECTION			
2. Accessory case	Dust brush	a. Inspect for loose, frayed,	

4-19. DUST BRUSH - MAINTENANCE INSTRUCTIONS (CONT)

LOCATION	ITEM	ACTION	REMARKS
		broken, and dirty bristles. b. Replace defective dust brush	
INSTALLATION			
3. Accessory case	Dust brush	Install in accessory case	Refer to figure 2-13.

4-20. CHAMOIS SKIN - MAINTENANCE INSTRUCTIONS

This task covers:

a. Removal **b. Inspection** **c. Installation**

LOCATION	ITEM	ACTION	REMARKS
REMOVAL			
1. Accessory case	Chamois skin	Remove from accessory case	Refer to figure 2-13.
INSPECTION			
2. Accessory case	Chamois skin	a. Inspect for rips, cuts, frays, and dirt. b. Replace defective chamois skin.	
INSTALLATION			
3. Accessory case	Chamois skin	Install in accessory case.	Refer to figure 2-13.

4-21. DUST/RAIN COVER - MAINTENANCE INSTRUCTIONS

This task covers:

a. Removal **b. Cleaning and Inspection** **c. Installation**

LOCATION	ITEM	ACTION	REMARKS
REMOVAL			
1. Accessory case	Dust/rain cover	Remove from accessory case.	Refer to figure 2-13.
CLEANING AND INSPECTION			
2. Accessory case	Dust/rain cover	a. Clean with clean lint-free cloth moistened with water b. Inspect for rips, cuts, and frays. c. Replace defective dust/rain cover.	
INSTALLATION			
3. Accessory case	Dust/rain cover	Install in accessory case.	Refer to figure 2-13.

4-22. GREASE CONTAINER - MAINTENANCE INSTRUCTIONS

This task covers:

a. Removal **b. Cleaning and Inspection** **c. Installation**

LOCATION	ITEM	ACTION	REMARKS
REMOVAL			
1. Accessory case	Grease container	Remove from accessory case.	Refer to figure 2-13.
CLEANING AND INSPECTION			
		WARNING **Dry cleaning solvent, P-D-680, used to clean parts is potentially dangerous to personnel and property. Avoid repeated and prolonged skin contact. Do not use near open flame or excessive heat. Flash point of solvent is 100°F. 138°F. (38°C. 59°C.) Do not use P-D-680 to clean lens.**	
2. Accessory case	Grease container	a. Clean outside with a clean, lint-free cloth moistened with cleaning solvent. b. Inspect for cracks, holes, and leaks.	

4-22. GREASE CONTAINER - MAINTENANCE INSTRUCTIONS (cont)

LOCATION	ITEM	ACTION	REMARKS
		c. Replace defective grease container.	
INSTALLATION			
3. Accessory case	Grease container	Install in accessory case.	Refer to figure 2-13.

4-23. EYEPIECE PRISM ASSEMBLY - MAINTENANCE INSTRUCTIONS

This task covers:
a. Removal **b. Cleaning and Inspection** **c. Installation**

LOCATION	ITEM	ACTION	REMARKS
1. Eyepiece prism assembly	Eyepiece prism assembly	Remove from case.	Refer to figure 1-1.
CLEANING AND INSPECTION			

WARNING
Dry cleaning solvent, P-D-680, used to clean parts is potentially dangerous to personnel and property. Avoid repeated and prolonged skin contact. Do not use near open flame or excessive heat. Flash point of solvent is 100°F. 138°F. (38°C. 59°C.) Do not use P-D-680 to clean lens.

2. Eyepiece prism assembly	Eyepiece prism assembly	a. Clean all parts except lens and prisms with a	

4-23. EYEPIECE PRISM ASSEMBLY - MAINTENANCE INSTRUCTIONS (cont)

This task covers:

a. Pre-Inspection	**b. Removal**	**c. Cleaning.**
c. Disassembly	**e. Inspection**	**g. Installation**

INITIAL SETUP

LOCATION	ITEM	ACTION	REMARKS
		clean, lint-free cloth moistened with cleaning solvent.	
		b. Clean lens with dust brush or lens tissue.	
		c. Inspect metal parts for bends, breaks, cracks and corrosion.	
		d. Inspect lens for chips, cracks, scratches, and fungus etching.	
		e. Replace defective eyepiece prism assembly.	

4-23. EYEPIECE PRISM ASSEMBLY - MAINTENANCE INSTRUCTIONS (cont)

LOCATION	ITEM	ACTION	REMARKS
INSTALLATION			
3. Eyepiece prism assembly	Eyepiece prism assembly	Install eyepiece prism assembly in case.	Refer to figure 1-1.

4-24. SUNSHADE - MAINTENANCE INSTRUCTIONS

This task covers:
a. Removal **b. Cleaning and Inspection** **c. Installation**

LOCATION	ITEM	ACTION	REMARKS
REMOVAL			
1. Theodolite	Sunshade	Twist slightly counterclockwise then pull from telescope.	Refer to figure 2-17.
CLEANING AND INSPECTION			
		WARNING **Dry cleaning solvent, P-D-680, used to clean parts is potentially dangerous to personnel and property. Avoid repeated and prolonged skin contact. Do not use near open flame or excessive heat. Flash point of solvent is 100°F. 138°F. (38°C. 59°C.) Do not use P-D-680 to clean lens.**	
2. Sunshade	Sunshade	a. Clean with clean lint-free cloth	

4-24. SUNSHADE - MAINTENANCE INSTRUCTIONS (cont)

LOCATION	ITEM	ACTION	REMARKS
		moistened with cleaning solvent.	
		b. Inspect for cracks, scratches, corrosion, and distortion.	
		c. Replace defective sunshade.	
INSTALLATION			
3. Telescope	Sunshade	Gently push sunshade on to telescope. To store, aline slot in sunshade with projection, push sunshade on to telescope and twist clockwise to lock in place.	Refer to figure 2-17.

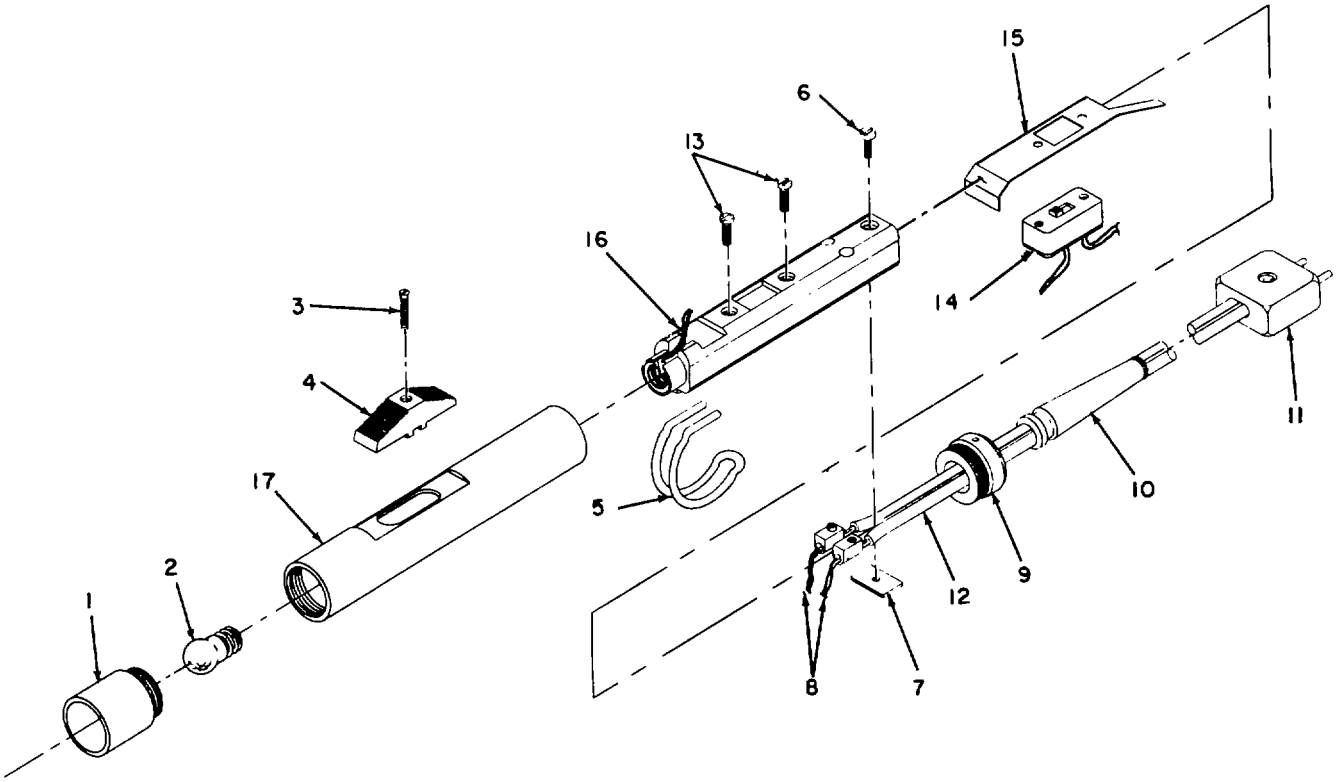

5-6675-312-14/4-3

1. Sleeve
2. Bulb
3. Machine screw
4. Switch slide
5. Hook
6. Machine screw
7. Plate
8. Wire (2)
9. End cover
10. Sleeve
11. Plug
12. Cable
13. Machine screw (2)
14. Switch
15. Contact spring
16. Insulation housing
17. Housing

Figure 4-3. Handlamp, disassembly and assembly

4-25. HANDLAMP - MAINTENANCE INSTRUCTIONS

This task covers:

a. Removal **b. Disassembly** **c. Cleaning. Inspection, and Repair**
d. Reassembly **e. Installation**

4-25. HANDLAMP - MAINTENANCE INSTRUCTIONS (cont)

LOCATION	ITEM	ACTION	REMARKS
REMOVAL			
1. Battery box assembly	Handlamp	Remove from battery box assembly.	Refer to figure 2-14.
DISASSEMBLY			
2. Handlamp	Handlamp	Disassembly	Refer to figure 4-3. Disassemble in sequence of key numbers.
CLEANING, INSPECTION, AND REPAIR			

WARNING

Dry cleaning solvent, P-D-680, used to clean parts is potentially dangerous to personnel and property. Avoid repeated and prolonged skin contact. Do not use near open flame or excessive heat. Flash point of solvent is 100°F. 138°F. (38°C. 59°C.) Do not use P-D-680 to clean lens.

3. Handlamp	Handlamp	a. Clean all parts with a clean, lint-free cloth moistened with cleaning fluid.	

4-25. HANDLAMP - MAINTENANCE INSTRUCTIONS (cont)

LOCATION	ITEM	ACTION	REMARKS
		b. Inspect for cracks, breaks, burrs, corrosion, broken wires, and frayed and cracked insulation.	
		c. Inspect plug for corro-sion and defective contacts.	
		d. Inspect switch for smooth and proper operation.	
		e. Replace de-fective parts.	
REASSEMBLY			
4. Handlamp	Handlamp	Reassemble	Refer to figure 4-3. Reassemble in reverse of key number sequence.

4-25. HANDLAMP - MAINTENANCE INSTRUCTIONS (cont)

LOCATION	ITEM	ACTION	REMARKS
INSTALLATION			
Battery box assembly	Handlamp	Install in battery box assembly.	Refer to figure 2-14.

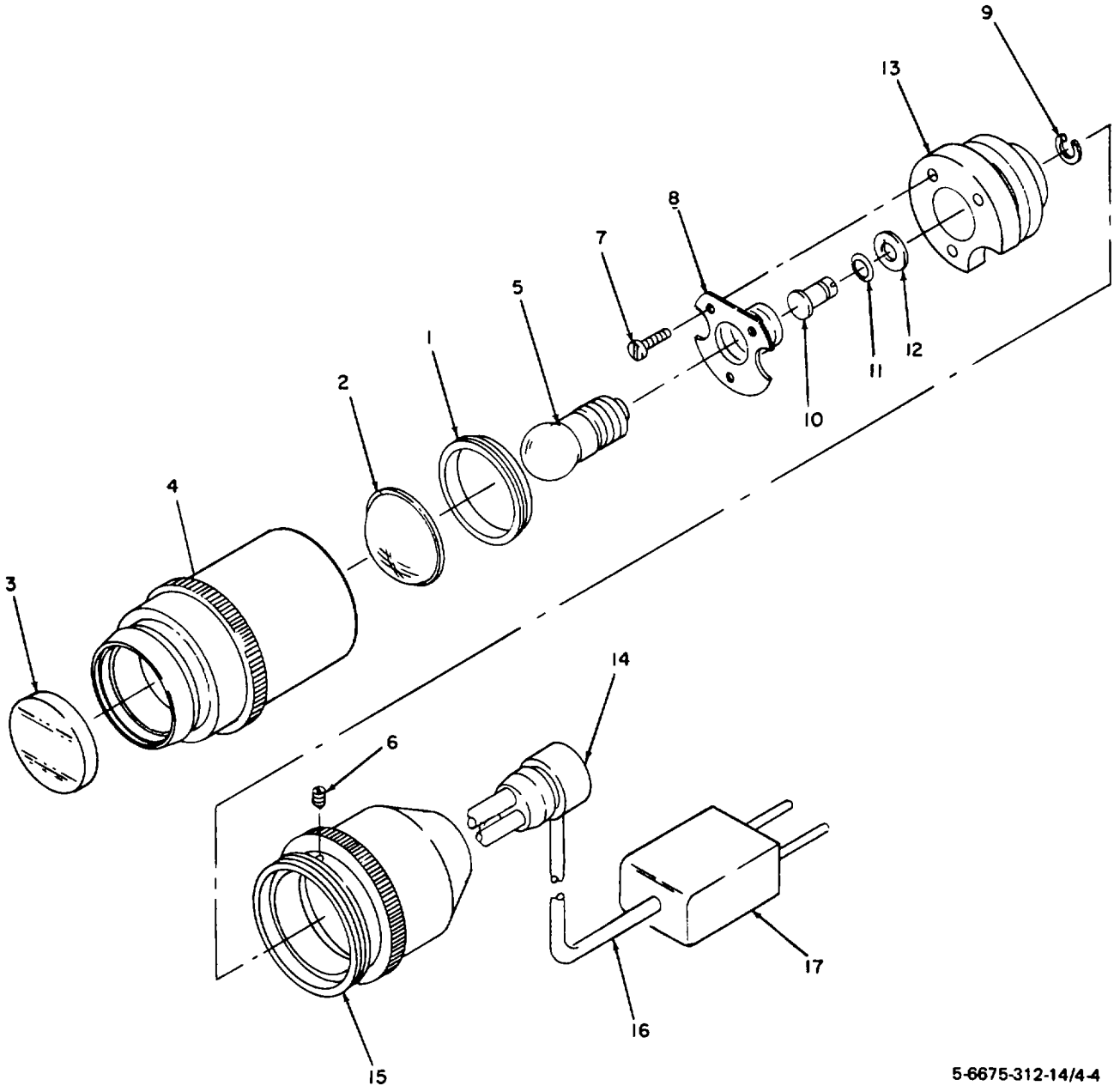

Figure 4-4. Plug-in lamp, disassembly and reassembly

KEY to fig. 4-4:

1.	Lock ring	9.	Snap ring
2.	Condensor lens	10.	Contact
3.	Blue filter	11.	Spring Washer
4.	Mount	12.	Flat washer
5.	Bulb	13.	Insulation
6.	Setscrew	14.	Cable sleeve
7.	Screw (3)	15.	Mount
8.	Lamp mount	16.	Cable
	17. Plug		

4-26. PLUG-IN LAMP MAINTENANCE INSTRUCTIONS

This task covers:

a. Removal **b. Disassembly** **c. Cleaning, Inspection, and Repair**

4-26. PLUG-IN LAMP MAINTENANCE INSTRUCTIONS (cont)

d. Reassembly
e. Installation

LOCATION	ITEM	ACTION	REMARKS
REMOVAL			
1. Accessory case	Plug-in lamp	Remove from accessory case	Refer to figure 2-13.

LOCATION	ITEM	ACTION	REMARKS
DISASSEMBLY			
2. Plug-in lamp	Plug-in lamp	Disassemble	Refer to figure 4-4. Disassemble in sequence of key numbers.

CLEANING, INSPECTION, AND REPAIR

WARNING

Dry cleaning solvent, P-D-680, used to clean parts is potentially dangerous to personnel and property. Avoid repeated and prolonged skin contact. Do not use near open flame or excessive heat. Flash point of solvent is 100°F.-138°F. (38°C.-59°C.) Do not use P-D-680 to clean lens.

3. Plug-in lamp	Plug-in lamp	a. Clean all parts except blue filter and condensor lens with a clean, lint-free cloth moistened with	

4-26. PLUG-IN LAMP - MAINTENANCE INSTRUCTIONS (cont)

cleaning solvent.

b. Clean blue filter and condenser lens with dust brush or lens tissue.

c. Inspect blue filter and condensor lens for chips, cracks, scratches, and fungus etching.

d. Inspect for cracks, breaks, burrs, corrosion, broken wires, and frayed or cracked insulation.

e. Inspect plug for corrosion and defective contacts.

4-26. PLUG-IN LAMP - MAINTENANCE INSTRUCTIONS (cont)

LOCATION	ITEM	ACTION	REMARKS
		f. Replace defective parts.	
REASSEMBLY			
4. Plug-in lamp	Plug-in lamp	Reassemble	Refer to figure 4-4. Reassemble in reverse of key number sequence.
INSTALLATION			
5. Accessory case	Plug-in lamp	Install plug-in lamp in accessory case.	Refer to figure 2-13.

KEY to fig. 4-5:

1. Setscrew
2. Eyepiece assembly
3. Plug-in lamp assembly
4. Plug
5. Pin
6. Plug-in mount
7. Bulb
8. Lamp housing
9. Cable assembly

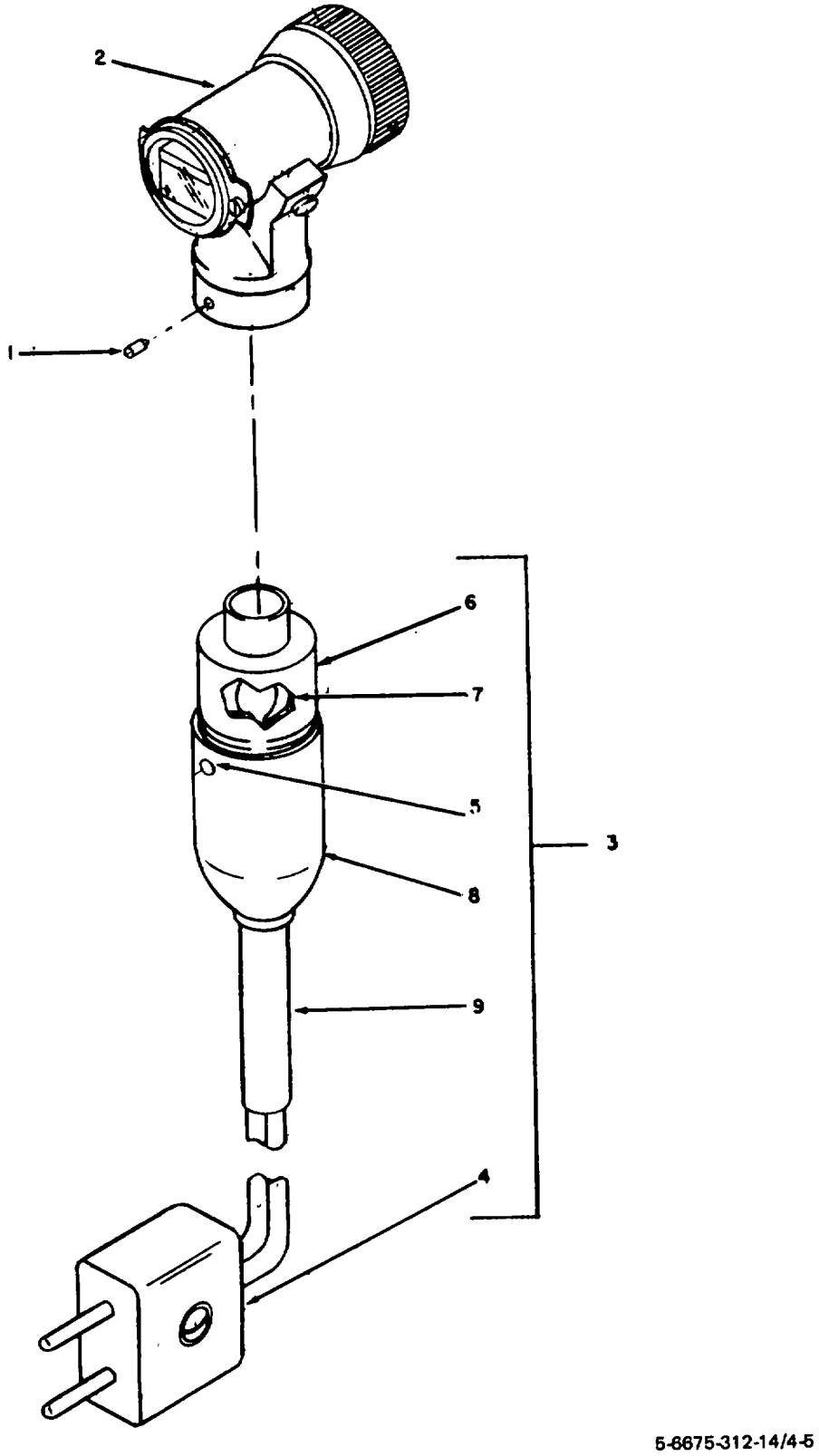

Figure 4-5. Autocollimation, eyepiece disassembly and reassembly

4-27. AUTOCOLLIMATION EYEPIECE - MAINTENANCE INSTRUCTIONS

This task covers:

a. Removal **b. Disassembly** **c. Cleaning, Inspection, and Repair**
d. Reassembly **e. Installation**

LOCATION	ITEM	ACTION	REMARKS
REMOVAL			
1. Accessory case	Autocollimation eyepiece	Remove autocollimation eyepiece from accessory case.	Refer to figure 2-13.
DISASSEMBLY			
2. Autocollimation eyepiece	Autocollimation eyepiece	Disassemble	Refer to figure 4-5. Disassemble in sequence of key numbers.
CLEANING, INSPECTION, AND REPAIR			
		WARNING **Dry cleaning solvent, P-D-680, used to clean parts is potentially dangerous to personnel and property. Avoid repeated and prolonged skin contact. Do not use near open flame or excessive heat. Flash point of solvent is 100°F.-138°F. (38°C.-59°C.) Do not use P-D-680 to clean lens.**	
3. Autocollimation eyepiece	Autocollimation eyepiece	a. Clean parts, except for	

4-27. AUTOCOLLIMATION EYEPIECE - MAINTENANCE INSTRUCTIONS (cont)

LOCATION	ITEM	ACTION	REMARKS
		lens, with a clean, lint-free cloth moistened with cleaning solvent.	
		b. Clean lens in eyepiece assembly with dust brush or lens tissue.	
		c. Inspect eyepiece assembly for cracks, scratches, chips, and proper operation.	
		d. Inspect cable assembly for broken wires, and cracked and frayed insulation.	

4-27. AUTOCOLLIMATION EYEPIECE - MAINTENANCE INSTRUCTIONS (cont)

LOCATION	ITEM	ACTION	REMARKS
		e. Inspect plug for corrosion and defective contacts.	
		f. Inspect plug-in mount for cracks and breaks.	
		g. Replace defective parts.	
REASSEMBLY			
4. Autocollimation eyepiece	Autocollimation eyepiece	Reassemble	Refer to figure 4-5. Reassemble in reverse of key number sequence.
INSTALLATION			
5. Accessory case	Autocollimation eyepiece	Install autocollimation eyepiece in accessory case.	Refer to figure 2-13.

equipment and the operator should be protected from the direct sunlight by an umbrella or other suitable means. Under these conditions, shorter sightings will decrease the amount of sighting errors. Taking sightings during early morning and late evening will also minimize error magnitude. The use of suitable dark glasses by the operator will reduce eyestrain and fatigue. If the equipment is kept in cool storage place, it should be removed from storage in sufficient time before use to allow the temperature of the metal to approach that of the outside air.

c. Operation in Dusty or Sandy Areas. Special care must be given equipment which is being used in dusty or sandy areas, since both dust and sand are highly abrasive. If dust and sand are allowed to remain on threaded or sliding surfaces, moving parts of the equipment will soon bind and the equipment will become inaccurate or inoperable. The equipment should be brushed frequently with the dust brush and carefully wiped clean with a soft lint-free cloth. Be extremely careful not to scratch lens and prism surfaces during cleaning operations. Always protect the equipment from blowing dust and sand. Place the dust/rain cover over the theodolite when it is not in use.

d. Operation Under Rainy or Humid Conditions. In humid areas, a slight lowering of the temperature will cause condensation of moisture and fogging of lenses and prisms. Internal fogging can usually be removed by placing the equipment in a warm, dry place. Corrosion caused by high humidity can be partially eliminated by using warm, dry storage areas and desiccants. After use, dry the equipment thoroughly with a soft, lint-free cloth. Place the dust/rain cover over the theodolite when it is not in use.

e. Operation in Salt Water Areas. When operating the equipment in salt water areas, wipe the instrument frequently with a soft lint-free cloth. If the equipment is exposed to direct salt spray, it should be cleaned thoroughly and should be

returned to an instrument shop for overhauling as soon as possible. Cleaning intervals should be shortened considerably for equipment subjected to salt air exposure. Salt is-highly corrosive to metal.

f. Operation in Snow. Visibility is sharply reduced while snow is falling. When taking sightings after a snowfall, the use of suitable dark glasses by the instrument man will reduce eyestrain and fatigue. If snow conditions are accompanied by extreme cold (below 0°F.) (-18°C), refer to paragraph 2-11 a. Place dust/rain cover over theodolite when it is not in use.

g. Operation in Mud. Mud is highly abrasive and if allowed to remain on threaded or sliding surfaces, moving parts of the equipment will soon bind and the equipment will become inaccurate or inoperable. The equipment should be carefuly wiped clean with a soft, lint-free cloth. Be extremely careful not to scratch lens and prism surfaces during cleaning operations. Place the dust/rain cover over the theodolite when not in use. When the tripod is set up on muddy ground, leveling is extremely important and should be checked frequently. Anchor tripod legs firmly to avoid slippage which will cause incorrect readings.

h. Operation at High Altitudes. No special procedures are required to operate the equipment at high altitudes.

4-28. CIRCULAR COMPASS ASSEMBLY - MAINTENANCE INSTRUCTION (cont)

LOCATION	ITEM	ACTION	REMARKS
		e. Inspect cover glass and eyepiece assembly for scratches, cracks, chips, and fungus etching.	
		f. Inspect eyepiece assembly for proper operation.	
		g. Inspect safety catch and locking screw for proper operation.	
		h. Inspect for damaged compass circle.	
		i. Inspect release knob for proper operation.	

4-28. CIRCULAR COMPASS ASSEMBLY - MAINTENANCE INSTRUCTIONS (cont)

LOCATION	ITEM	ACTION	REMARKS
		j. Inspect clamp assembly for proper operation.	
		k. Inspect metal parts for cracks, scratches, and rust and corrosion.	
		l. Replace defective circular compass assembly.	
INSTALLATION			
3. Circular compass assembly	Circular compass assembly	Install circular compass assembly in carrying case.	Refer to figure 2-18.

4-29. TRIBRACH ASSEMBLY - MAINTENANCE INSTRUCTIONS

This task covers:

a. Removal **b. Cleaning and Inspection** **c. Installation**
d. Adjustment

4-29. TRIBRACH ASSEMBLY - MAINTENANCE INSTRUCTIONS (cont)

LOCATION	ITEM	ACTION	REMARKS
REMOVAL			
1. Theodolite and tribrach assembly in.	Tribrach assembly	a. Screw recessed machine screw all the way	Refer to figure 3-7.
		b. Rotate lever knob so that arrow point upward.	
		c. Lift theodolite off of tribrach assembly.	
CLEANING AND INSPECTION			

WARNING

Dry cleaning solvent, P-D-680, used to clean parts is potentially dangerous to personnel and property. Avoid repeated and prolonged skin contact. Do not use near open flame or excessive heat. Flash point of solvent is 100°F. 138°F. (38°C. 59°C.). Do not use P-D-680 to clean lens.

2. Tribrach assembly	Tribrach assembly	a. Clean with a clean, lint-free cloth moistened with cleaning solvent.	

4-29. TRIBRACH ASSEMBLY - MAINTENANCE INSTRUCTIONS (cont)

LOCATION	ITEM	ACTION	REMARKS
		b. Inspect for cracks and breaks.	
		c. Inspect foot-screw assemblies for proper operation. They should turn smoothly, yet require a moderate amount of force. There should be no backlash.	
		d. Replace defective tribrach assembly.	

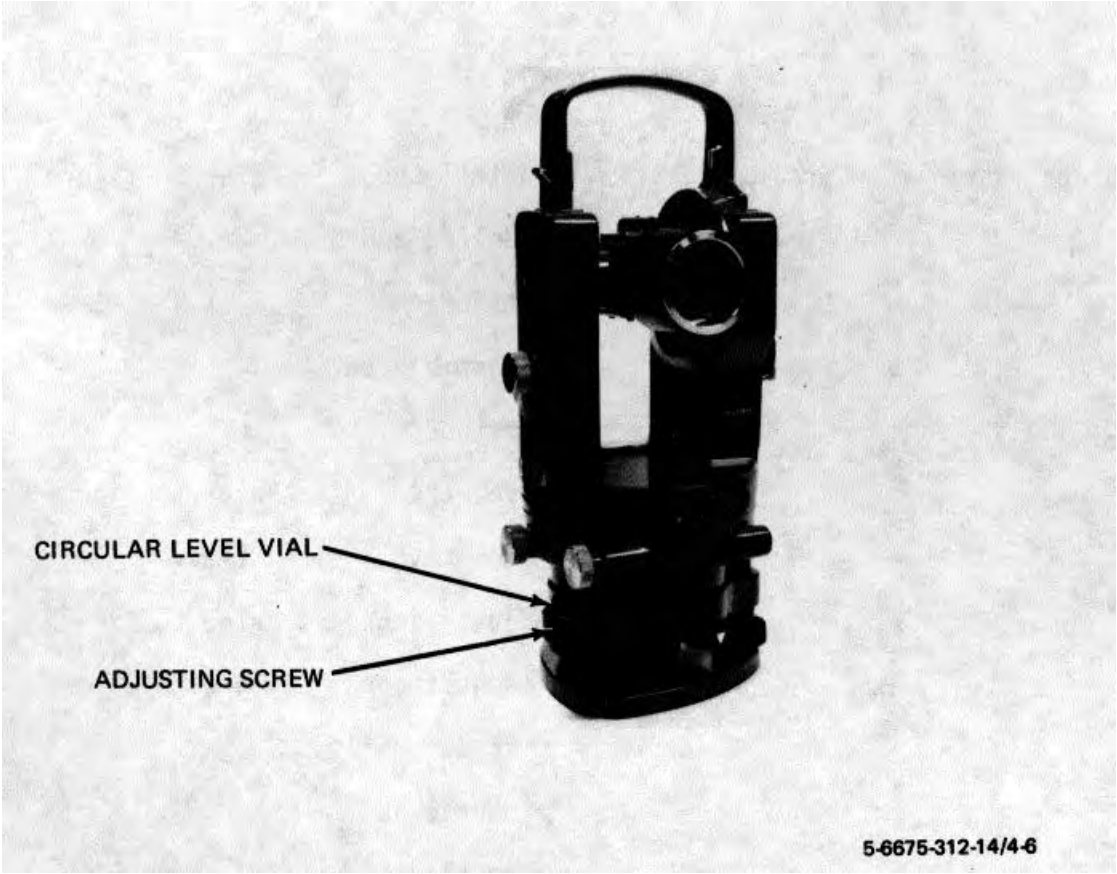

Figure 4-6. Circular level vial adjustment

4-29. TRIBRACH ASSEMBLY - MAINTENANCE INSTRUCTIONS (cont)

LOCATION	ITEM	ACTION	REMARKS
INSTALLATION			
3. Theodolite and tribrach assembly		Tribrach assembly	Install Refer to figure 3-7.
ADJUSTMENT			
4. Tribrach assembly	level vial	Circular dolite and	a. Install theo- Refer to figure 2-10. tribrach assembly on tripod.
			b. Level theo- dolite. Refer to figure 2-21.
			c. Adjust either adjustment screw until bubble is on the imaginary line join- ing the other adjustment screw and the center of the setting circle. Refer to figure 4-6.

4-29. TRIBRACH ASSEMBLY - MAINTENANCE INSTRUCTIONS (cont)

LOCATION	ITEM	ACTION	REMARKS
		d. Adjust the other adjustment screw to center the bubble in the setting circle.	

4-30. TRIPOD - MAINTENANCE INSTRUCTIONS

This task covers:

a. Removal
b. Cleaning and Inspection
c. Installation

LOCATION	ITEM	ACTION	REMARKS
REMOVAL			
1. Tripod		Tripod Loosen central fixing screw and remove theodolite and tribrach assembly from tripod.	Refer to figure 2-19.
2. Tripod	assembly and allen wrench and allen wrench.	Plumbbob Open tripod accessory case and remove plumbbob assembly	Refer to figure 2-19.

4-30. TRIPOD - MAINTENANCE INSTRUCTIONS (cont)

LOCATION	ITEM	ACTION	REMARKS
CLEANING AND INSPECTION			
		WARNING **Dry cleaning solvent, P-D-680, used to clean parts is potentially dangerous to personnel and property. Avoid repeated and prolonged skin contact. Do not use near open flame or excessive heat. Flash point of solvent is 100°F. - 138°F (38°C. - 59°C.). Do not use P-D-680 to clean lens.**	
3. Tripod	Tripod	a. Clean metal parts with a clean, lint-free cloth moistened with cleaning fluid. b. Clean wood and plastic parts with a clean,	

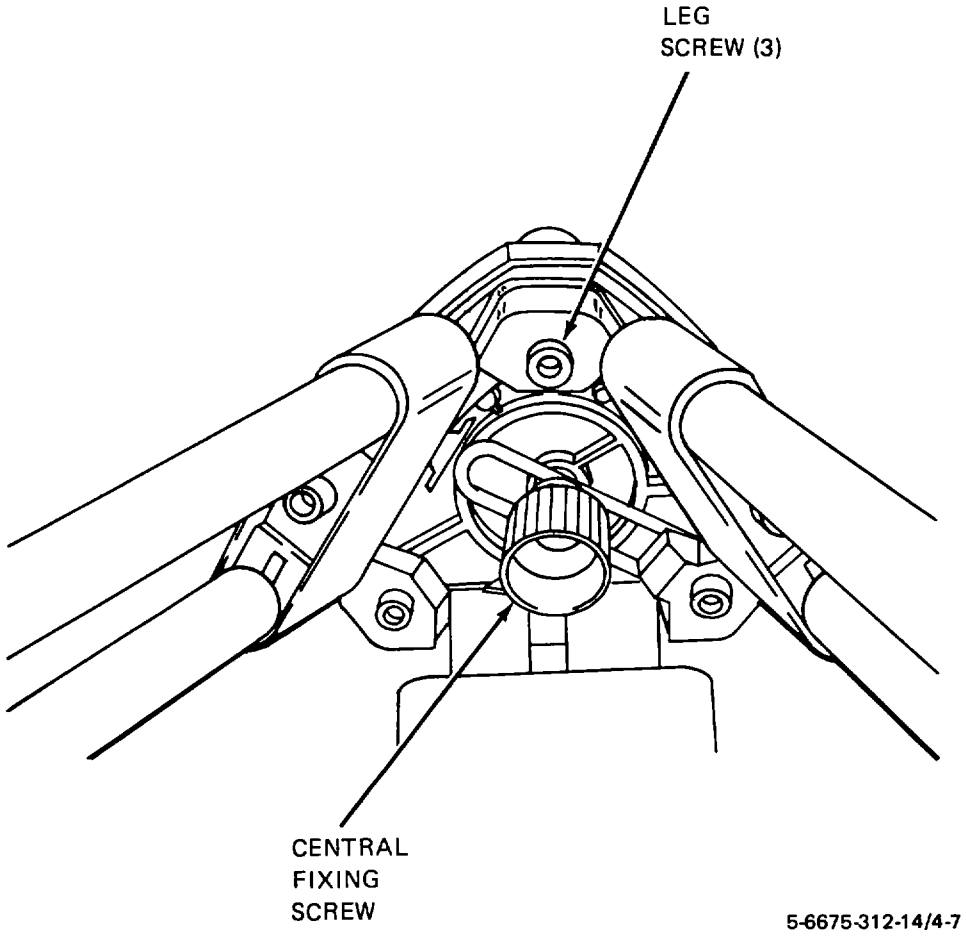

Figure 4-7. Tripod leg adjustment

4-30. TRIPOD - MAINTENANCE INSTRUCTIONS (cont)

LOCATION	ITEM	ACTION	REMARKS
		lint-free cloth moistened with water. Dry thoroughly.	
		c. Clean leather strap with saddle soap.	
		d. Inspect metal parts for cracks, scratches, burrs, breaks, wear, and rust and corrosion.	
		e. Inspect wood and plastic parts for cracks, breaks, and wear.	
		f. Verify that when tripod is lifted by the tripod head plate the legs just remain spread out. If not, adjust leg screws with allen wrench.	Refer to figure 4-7.

4-30. TRIPOD - MAINTENANCE INSTRUCTIONS (cont)

LOCATION	ITEM	ACTION	REMARKS
			g. Replace defective tripod.
4. Tripod		Plumbbob assembly	a. Clean with a lint-free cloth moistened with water. Dry thoroughly.
			b. Inspect for breaks, cracks, wear, and damaged string.
			c. Replace defective plumbob assembly.
5. Tripod	wrench	Allen clean, lint-	a. Clean with a free cloth moistened with cleaning solvent.
			b. Inspect for scratches, cracks, breaks, and rust and corrosion.

4-30. TRIPOD - MAINTENANCE INSTRUCTIONS (cont)

LOCATION	ITEM	ACTION	REMARKS
		c. Replace defective allen wrench.	
INSTALLATION			
6. Tripod	assembly and allen wrench Close tripod accessory case.	Plumbbob assembly and allen wrench in tripod accessory case. Place plumbbob assembly and allen wrench in tripod accessory case.	Refer to figure 2-19.
7. Tripod		Tripod tribrach assembly on tripod. Install theodolite tribrach assembly on tripod.	Refer to figure 2-19.

Section VI. PREPARATION FOR STORAGE AND SHIPMENT

4-31. GENERAL This section contains the information necessary to prepare the equipment for storage and shipment.

4-32. PREPARATION FOR STORAGE AND SHIPMENT

a. Perform the preventive maintenance checks and services in accordance with para. 2-4.

b. Remove top from shipping crate.

c. Wrap tripod, rucksack, accessory case, and battery box assembly with wrapping material.

d. Place wrapped tripod, rucksack, accessory case, and battery box assembly in shipping crate with packing material.

4-32. PREPARATION FOR STORAGE AND SHIPMENT (cont)

e. Install top on shipping crate. Store shipping crate in a safe place.

f. Insure that desiccant in metal carrying case is blue. If desiccant is pink replace or dehydrate desiccant.

g. Secure theodolite to metal carrying case base (fig. 2-8) using two levers.

h. Lower metal carrying case hood onto base and secure with clamps (fig. 2-7).

i. Place metal carrying case in shipping case (fig. 2-6).

j. Close shipping case cover (fig. 2-6) and secure with snap-lock.

CHAPTER 5

DIRECT SUPPORT MAINTENANCE INSTRUCTIONS

Section I. REPAIR PARTS, SPECIAL TOOLS, TMDE AND SUPPORT EQUIPMENT

5-1. COMMON TOOLS AND EQUIPMENT For authorized common tools and equipment refer to the Modified Table of Organization and Equipment (MTOE) applicable to your unit.

5-2. SPECIAL TOOLS, TMDE AND SUPPORT EQUIPMENT There are no special tools, TMDE or support equipment required for direct support maintenance.

5-3. REPAIR PARTS Repair parts are listed and illustrated in the repair parts and special tools list. TM5-6675-312-24P, covering direct support maintenance for this equipment.

Section II. SERVICE UPON RECEIPT

5-4. SITE REQUIREMENTS There are no special site requirements required for the equipment.

5-5. SERVICE UPON RECEIPT

a. Unpacking. To unpack the equipment refer to paragraph 2-6a.

b. Checking Unpacked Equipment.

(1) Inspect the equipment for damage incurred during shipment. If the equipment has been damaged, report the damage on DD Form 6, Packaging Improvement Report.

(2) Check the equipment against the packing slip to see if the shipment is complete. Report all discrepancies in accordance with the instructions of TM 38-750.

(3) Check to see whether the equipment has been modified.

5-5. SERVICE UPON RECEIPT (cont)

c. Deprocessing Unpacked Equipment. There are no special instructions required to deprocess the unpacked equipment.

5-6. INSTALLATION INSTRUCTIONS

a. Tools, Test Equipment, and Materials Required for Installation. Other than the tripod allen wrench no other tools, test equipment or materials are required for installation.

b. Assembly of Equipment. To assemble the equipment refer to paragraph 2-6b.

c. Installation Instruction. To install the various major items on the equipment refer to paragraph 3-2.

Section III. PREVENTIVE MAINTENANCE CHECKS AND SERVICES

5-7. INTRODUCTION This section contains the direct support maintenance level preventive maintenance checks and services.

5-8. PREVENTIVE MAINTENANCE CHECKS AND SERVICES Table 4-1 lists the direct support preventive maintenance checks and services.

Section IV. TROUBLESHOOTING

5-9. GENERAL

a. This section contains troubleshooting or malfunction information and tests for locating and correcting most of the troubles which may develop in the theodolite. Each malfunction or trouble symptom for an individual component, unit, or system is followed by a list of tests or inspections necessary for you to determine probable causes and suggested corrective actions for you to remedy the malfunction.

5-9. GENERAL (cont)

b. This manual cannot list all possible malfunctions that may occur or all tests or inspections, and corrective actions. If a malfunction is not listed, or is not corrected by listed corrective actions, you should notify higher level maintenance.

5-10. TROUBLESHOOTING Table 5-1 lists the common malfunctions that you may find during the operation or maintenance of the theodolite or its components. You should perform the tests/inspections and corrective actions in the order listed.

NOTE

If you have a malfunction which is not listed in this table, notify the next higher level of maintenance.

Table 5-1. Troubleshooting

MALFUNCTION TEST OR INSPECTION CORRECTIVE ACTION
THEODOLITE AND TRIBRACH ASSEMBLY
1. THEODOLITE AND TRIBRACH ASSEMBLY WILL NOT SEAT PROPERLY ON TRIPOD HEAD
Step 1. Check alinement of the central fixing screw. Restart central fixing screw (see fig. 2-5).
Step 2. Inspect tribrach assembly for defects. Replace a defective tribrach assembly (see fig. 2-1).
Step 3. Tripod head defective. Repair tripod (para. 5-12).
2. THEODOLITE AND TRIBRACH ASSEMBLY WILL NOT STAY ON LINE
Step 1. Check theodolite and tribrach assembly for leveling (fig. 2-21). Replace theodolite and tribrach assembly.

Table 5-1. Troubleshooting (cont)

MALFUNCTION TEST OR INSPECTION CORRECTIVE ACTION
3. LIGHTS ON VERTICAL AND HORIZONTAL CIRCLES UNEQUAL OR ABSENT
Step 1. Plug-in lamp defective. Repair plug-in lamp (see fig. 3-3).
Step 2. Batteries defective. Replace batteries (see fig. 2-14).
Step 3. Illuminating mirror defective. Replace theodolite and tribrach assembly.
4. TRIPOD LEG WILL NOT LOCK IN POSITION Leg clamping screws loose. Tighten screws (see fig. 4-7).
5. HORIZONTAL AND VERTICAL DRIVE SCREWS HARD TO MOVE Horizontal and/or vertical screw assemblies defective. Replace theodolite and tribrach assembly.
6. FOOTSCREWS TOO TIGHT OR LOOSE Footscrews defective. Repair tribrach assembly (para. 5-13).
7. THEODOLITE TURNS TOO HARD OR TOO EASILY Horizontal clamp not fully released. Release horizontal clamp (see fig. 2-1).
8. TELESCOPE ASSEMBLY TURNS TOO HARD Vertical clamp not fully released. Release vertical clamp (see fig. 2-1).

Section V. MAINTENANCE PROCEDURES

5-11. GENERAL. The following paragraphs contain direct level maintenance procedures.

5-12. BATTERY BOX ASSEMBLY - MAINTENANCE INSTRUCTIONS This task covers:

a. Removal

b. Disassembly

c. Cleaning, Inspection, and Repair

d. Reassembly

e. Installation

LOCATION	ITEM	ACTION	REMARKS
REMOVAL			
1. Tripod	Handlamp, plug-in lamp, and/or autocollimation eyepiece assembly and battery box assembly from tripod leg holder from tripod leg holder.	a. Disconnect handlamp, plug-in lamp, and/or autocollimation eyepiece assembly from battery box assembly.	
		b. Unhook battery box assembly	Refer to figure 3-1.

5-12. BATTERY BOX ASSEMBLY - MAINTENANCE INSTRUCTIONS (cont)

LOCATION	ITEM	ACTION	REMARKS
DISASSEMBLY			
2.	Battery box assembly	Battery box assembly	Disassemble. Refer to figure 5-1. Disassemble in sequence of key numbers.

KEY for fig. 5-1:

1. Dummy battery (2)
2. Bulb (4)
3. Cover plate knob
4. Machine screw (2)
5. Plug (2)
6. Wood screw (2)
7. Wood screw (3)
8. Wooden block
9. Nut
10. Contact plate
11. Cover plate
12. Plate spring
13. Connector plate
14. Setscrew
15. Pin
16. Rheostat knob
17. Potentiometer
18. Washer
19. Machine screw
20. Spring washer
21. Cable clip
22. Cable
23. Insulating tube
24. Machine screw (2)
25. Nut (2)
26. Contact spring (2)
27. Contact plate
28. Rivet
29. Insulation plate
30. Battery box

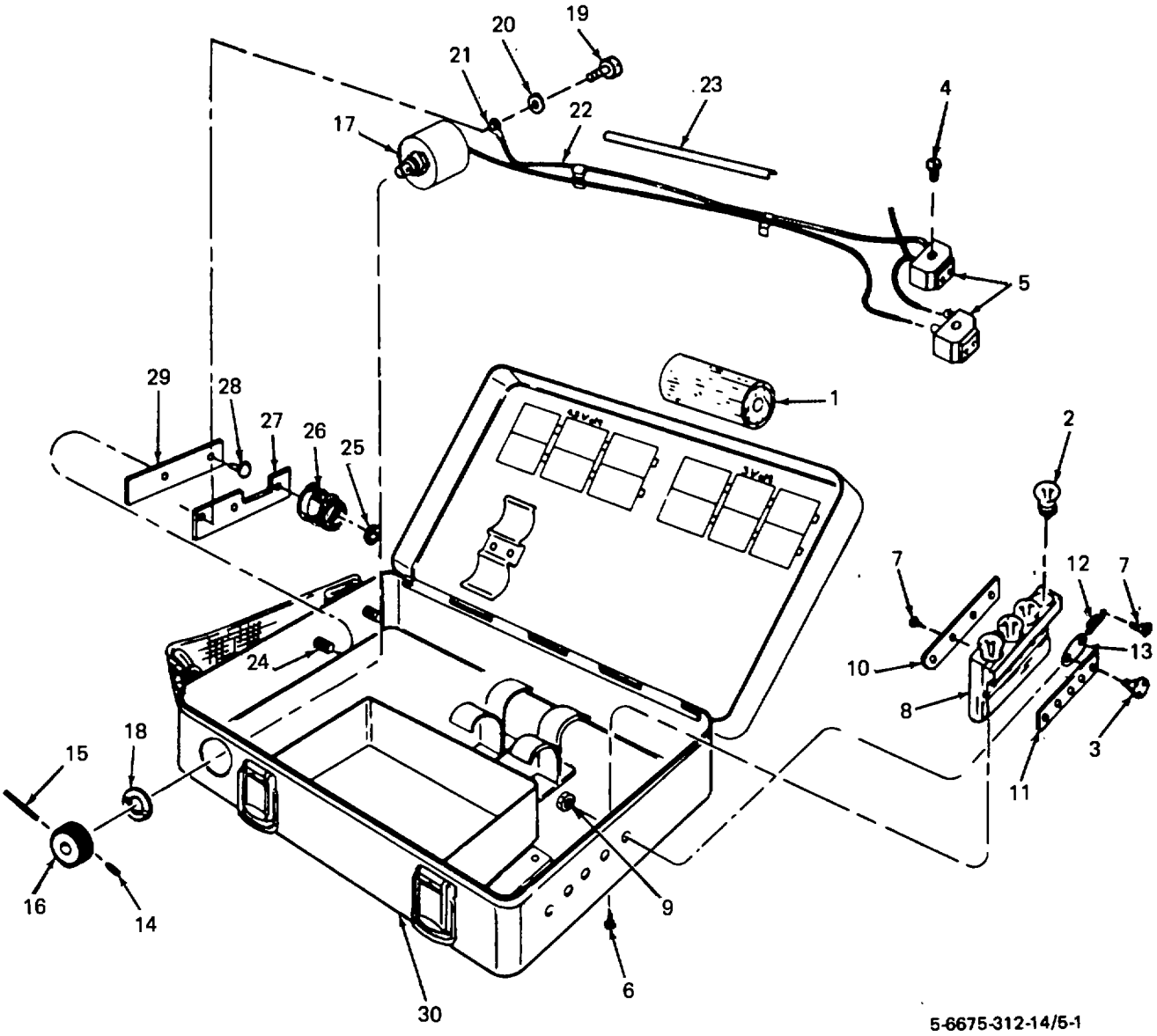

Figure 5-1. Battery assembly, disassembly and reassembly

5-12. BATTERY BOX ASSEMBLY - MAINTENANCE INSTRUCTIONS (cont)

LOCATION	ITEM	ACTION	REMARKS
CLEANING, INSPECTION, AND REPAIR			
		WARNING **Dry cleaning solvent, P-D-680, used to clean parts is potentially dangerous to personnel and property. Avoid repeated and prolonged skin contact. Do not use near open flame or excessive heat. Flash point of solvent is 100°F. - 138°F. (38°C. - 59°C.)**	
3. Battery box assembly		Battery box assembly a. Clean metal parts with a clean, lint-free cloth moistened with cleaning solvent. b. Clean plastic and wood parts with a clean, lint-free cloth moistened with water. Dry thoroughly. c. Inspect metal parts for burrs, bends, dents, cracks, rust and corrosion.	

5-12. BATTERY BOX ASSEMBLY - MAINTENANCE INSTRUCTIONS (cont)

LOCATION	ITEM	ACTION	REMARKS
		d. Inspect plastic parts for breaks and cracks.	
		e. Inspect wooden block for cracks.	
		f. Inspect batteries for leakage and corrosion.	
		g. Inspect cable for cracked and frayed insulation.	
		h. Inspect potentiometer for smooth operation and proper switch detent action.	

5-12. BATTERY BOX ASSEMBLY - MAINTENANCE INSTRUCTIONS (cont)

LOCATION	ITEM	ACTION	REMARKS
		i. Remove burrs. Straighten dents and bends. Remove rust and corrosion, and repaint where necessary.	
		j. Replace defective parts that can not be repaired.	
REASSEMBLY			
4. Battery box assembly	Battery box assembly	Reassemble	Refer to figure 5-1. Reassemble in reverse order of key numbers.
INSTALLATION			
5. Tripod	Battery box assembly	Hook battery box assembly on tripod leg holder.	Refer to figure 3-1.

5-13. TRIPOD - MAINTENANCE INSTRUCTIONS

This task covers:

a. Removal
b. Disassembly
c. Cleaning, Inspection, and Repair
d. Reassembly
e. Installation

LOCATION	ITEM	ACTION	REMARKS
REMOVAL			
1. Tripod	Tripod	Loosen central fixing screw and remove theodolite and tribrach assembly from tripod.	Refer to figure 2-19.
2. Tripod	Plumbbob assembly and allen wrench	Open tripod accessory case and remove plumbbob assembly and allen wrench.	Refer to figure 2-19.
DISASSEMBLY			
3. Tripod	Tripod	Disassemble	Refer to figure 5-2. Disassemble in sequence of key numbers.

5-13. TRIPOD - MAINTENANCE INSTRUCTIONS (cont)

LOCATION	ITEM	ACTION	REMARKS
4. Plumbbob assembly	Plumbbob assembly	Disassemble	Refer to figure 5-3. Disassemble in sequence of key numbers.

KEY to fig. 5-2:

1. Head cover
2. Carrying strap
3. Screw (3)
4. Nut (3)
5. Wedge (3)
6. Pressure wedge (6)
7. Screw (3)
8. Clamp jaw (3)
9. Clamp jaw
10. Bridge
11. Central fixing screws
12. Bearing (6)
13. Leg Holder
14. Head plate
15. Screw (2)
16. Leather strap
17. Screw (4)
18. Rivet (4)
19. Bracket (2)
20. Screw (6)
21. Stop plate (3)
22. Stop plate (3)
23. Screw (3)
24. Washer (3)
25. Nut (3)
26. Tripod shoe (3)
27. Lower leg (3)
28. Screw (3)
29. Screw (6)
30. Wing screw (3)
31. Clamp plate (3)
32. Clamp band (2)
33. Clamp band
34. Wood dowel (3)
35. Wood dowel (3)
36. Pin (24)

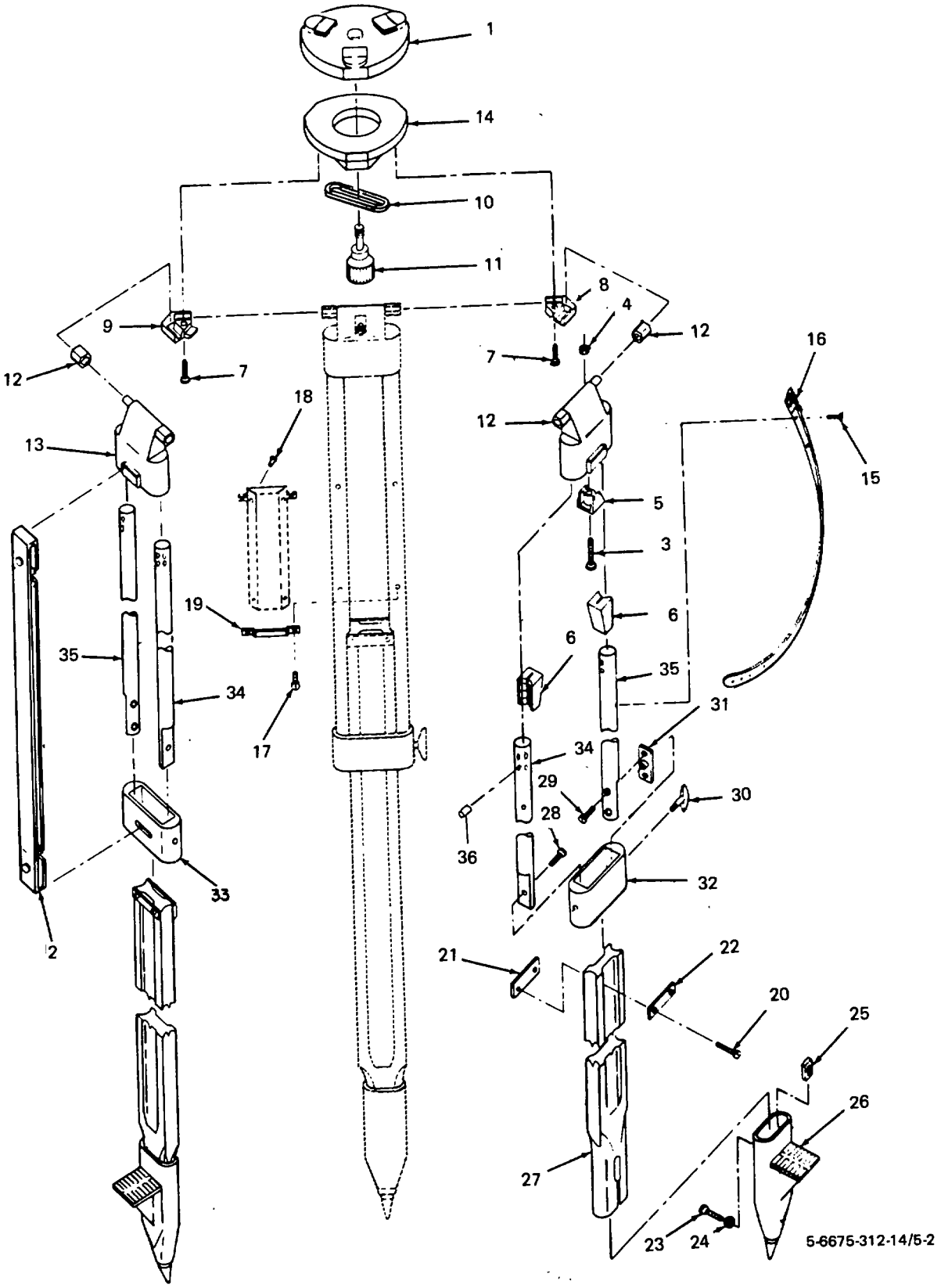

Figure 5-2. Tripod, disassembly and reassembly

KEY to fig. 5-3:

1. Plumbbob
2. Nut
3. Adjuster slide
4. String
5. Ring
6. Bayonet socket

5-13. TRIPOD - MAINTENANCE INSTRUCTIONS (cont)

LOCATION	ITEM	ACTION	REMARKS

CLEANING, INSPECTION, AND REPAIR

WARNING

Dry cleaning solvent, P-D-680, used to clean parts is potentially dangerous to personnel and property. Avoid repeated and prolonged skin contact. Do not use near open flame or excessive heat. Flash point of solvent is 100 °F. 138 °F. (38 °C. 59 °C.).

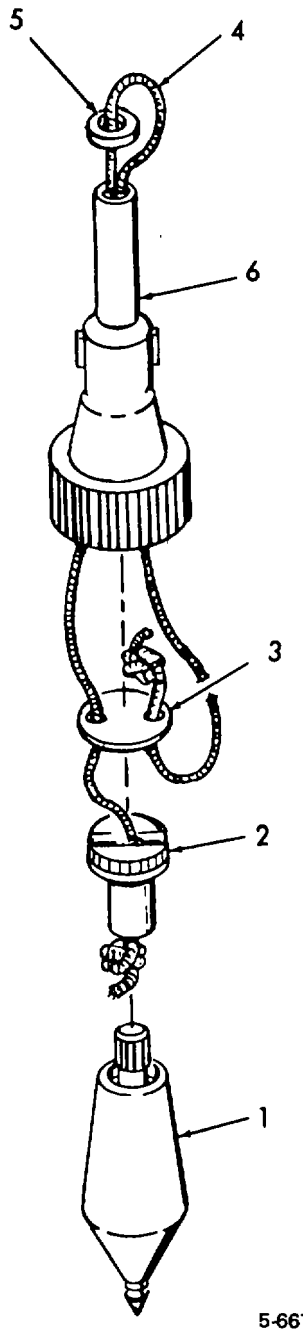

5-6675-312-14/5-3

Figure 5-3. Plumbbob assembly, disassembly and reassembly

5-13. TRIPOD - MAINTENANCE INSTRUCTIONS (cont)

LOCATION	ITEM	ACTION	REMARKS
5. Tripod	Tripod	a. Clean metal parts with a clean, lint-free cloth moistened with cleaning fluid. b. Clean wood and plastic parts with a clean, lint-free cloth moistened with water. Dry thoroughly. c. Clean leather strap with saddle soap. d. Inspect metal parts for cracks, scratches, burrs, wear, and rust and corrosion. e. Inspect wood and plastic parts for cracks, breaks, and wear.	

5-13. TRIPOD - MAINTENANCE INSTRUCTIONS (cont)

LOCATION	ITEM	ACTION	REMARKS
		NOTE **Do not paint central fixing screw or surface of tripod head plate that mates with tribrach assembly.**	
		f. Remove burrs. Remove rust and corrosion, and repaint where necessary.	
		g. Replace defective parts that can not be repaired.	
6. Plumbbob assembly	Plumbbob assembly	a. Clean with a clean, lint-free cloth moistened with water. Dry thoroughly.	
		b. Inspect for breaks, cracks, wear, and damaged string.	
		c. Replace defective parts.	

5-13. TRIPOD - MAINTENANCE INSTRUCTION (cont)

LOCATION	ITEM	ACTION	REMARKS
7. Allen wrench	Allen wrench	a. Clean with a clean, lint-free cloth moistened with cleaning solvent. b. Inspect for scratches, cracks, breaks, and rust and corrosion. c. Remove dust and corrosion. d. Replace defective allen wrench.	
REASSEMBLY			
8. Plumbbob assembly	Plumbbob assembly	Reassemble	Refer to figure 5-3. Re-assemble in reverse of key number sequence.
9. Tripod	Tripod	a. Reassemble	Refer to figure 5-2. Re-assemble in reverse of key number sequence.

5-13. TRIPOD - MAINTENANCE INSTRUCTION (cont)

LOCATION	ITEM	ACTION	REMARKS
		b. Verify that when tripod is lifted by tripod head plate the legs just remain spread out. If not adjust leg screws with allen wrench.	Refer to figure 4-7.
INSTALLATION			
10. Tripod	Plumbbob assembly and allen wrench	Place plumbbob assembly and allen wrench in tripod accessory case. Close tripod accessory case.	Refer to figure 2-19.
11. Tripod	Tripod	Install theodolite and tribrach assembly on tripod.	Refer to figure 2-19.

Section VI. PREPARATION FOR STORAGE AND SHIPMENT

5-14. GENERAL This section contains the information necessary to prepare the equipment for storage and shipment.

5-15. PREPARATION FOR STORAGE AND SHIPMENT

a. Perform the preventive maintenance checks and services in accordance with para. 2-4.

b. Remove top from shipping crate.

c. Wrap tripod, rucksack, accessory case, and battery box assembly with wrapping material.

d. Place wrapped tripod, rucksack, accessory case, and battery box assembly in shipping crate with packing material.

e. Install top on shipping crate. Store shipping crate in a safe place.

f. Insure that desiccant in metal carrying case is blue. If desiccant is pink, replace or dehydrate desiccant.

g. Secure theodolite and tribrach assembly to metal carrying case base (fig. 8) using two levers.

h. Lower metal carrying case hood onto base and secure with clamps (fig. 2-7).

i. Place metal carrying case in shipping case (fig. 2-6).

j. Close shipping case cover (fig. 2-6) and secure with snap-lock.

CHAPTER 6

GENERAL SUPPORT MAINTENANCE INSTRUCTIONS

Section I. REPAIR PARTS, SPECIAL TOOLS, TMDE AND SUPPORT EQUIPMENT

6-1. COMMON TOOLS AND EQUIPMENT For authorized common tools and equipment refer to the Modified Table of Organization and Equipment (MTOE) applicable to your unit.

6-2. SPECIAL TOOLS, TMDE, AND SUPPORT EQUIPMENT There are no special tools, TMDE, or support equipment required for general support maintenance.

6-3. REPAIR PARTS Repair parts are listed and illustrated in the repair parts and special tools list, TM5-6675-312-24P, covering general support maintenance for this equipment.

Section II. SERVICE UPON RECEIPT

6-4. SITE REQUIREMENTS There are no special site requirements required for the equipment.

6-5. SERVICE UPON RECEIPT

a. Unpacking. To unpack the equipment refer to paragraph 2-6a.

b. Checking Unpacked Equipment.

(1) Inspect the equipment for damage incurred during shipment. If the equipment has been damaged, report the damage on DD Form 6, Packaging Improvement Report.

(2) Check the equipment against the packing slip to see if the shipment is complete. Report all discrepancies in accordance with the instructions of TM 38-750.

(3) Checkto see whether the equipment has been modified.

c. Deprocessing Unpacked Equipment. There are no special instructions required to deprocess the unpacked equipment.

6-6. INSTALLATION INSTRUCTIONS

a. Tools, Test Equipment, and Materials Required for Installation. Other than the tripod allen wrench no other tools, test equipment or materials are required for installation.

b. Assembly of Equipment. To assemble the equipment refer to paragraph 2-6b.

c. Installation Instruction. To install the various major items on the equipment refer to paragraph 3-2.

Section III. PREVENTIVE MAINTENANCE CHECKS AND SERVICES.

6-7. INTRODUCTION This section contains the general support maintenance level preventive maintenance checks and services.

6-8. PREVENTIVE MAINTENANCE CHECKS AND SERVICES Table 4-1 lists the general support preventive maintenance checks and services.

Section IV. TROUBLESHOOTING

For troubleshooting information refer to paragraph 5-9.

Section V. MAINTENANCE PROCEDURES

6-9. GENERAL This section contains the circular compass assembly maintenance procedures.

KEY to fig. 6-1:

1. Machine screw (2)
2. Eyepiece assembly
3. Diopter ring
4. Lens mount
5. Eyepiece lens
6. Lens
7. Eyepiece mount
8. Coverglass assembly
9. Lock ring
10. Cover glass
11. Mount
12. Machine screw (2)
13. Prism assembly
14. Setscrew
15. Prism
16. Prism mount
17. Machine screw (2)
18. Clamp assembly
19. Clamp knob
20. Clamp screw
21. Bracket
22. Pressure plate
23. Machine screw (3)
24. Compass housing
25. O-ring
26. Magnet
27. Circle bearing
28. Machine screw (4)
29. Balancing weight (2)
30. Balancing weight (2)
31. Washer (4)
32. Compass circle
33. Compass pivot
34. Clamping ring assembly
35. Lock ring
36. Clamping ring
37. Setscrew
38. Flange
39. Base assembly
40. Setscrew
41. Release knob
42. Machine screw
43. Stop screw
44. Bolt
45. Torsion spring
46. Bushing
47. Screw
48. Release spring
49. Machine screw (3)
50. Washer (3)
51. Metal circle
52. Machine screw (3)
53. Flange
54. Bottom cover
55. Machine screw (4)
56. Bracket assembly
57. Setscrew
58. Knurled knob
59. Screw
60. Setscrew
61. Lock bolt
62. Spring
63. Lever
64. Mounting bracket
65. Compass pivot (2)
66. Pivot, holder
67. Carrying case

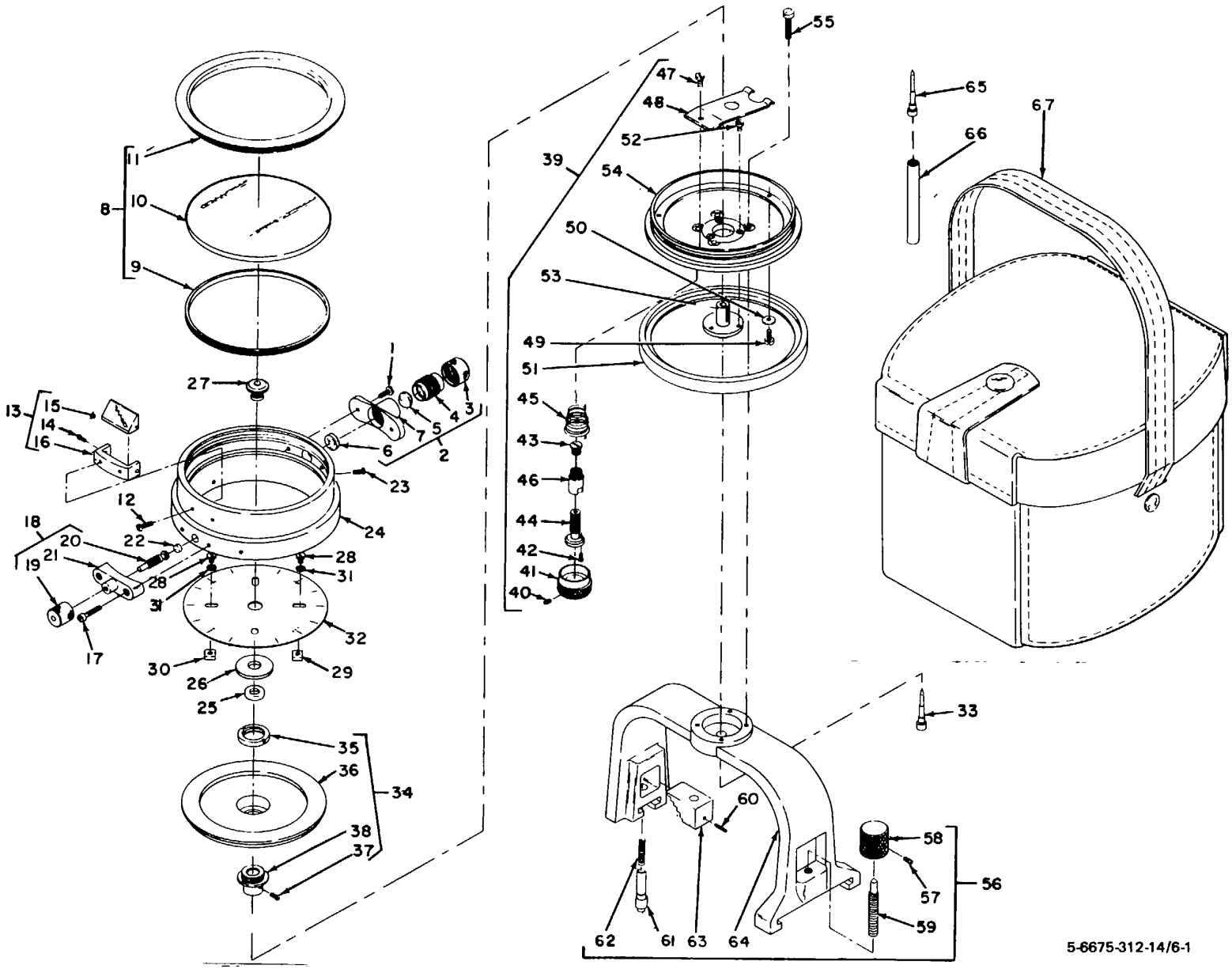

Figure 6-1. Circular compass assembly, disassembly and reassembly

6-10. CIRCULAR COMPASS ASSEMBLY - MAINTENANCE INSTRUCTIONS

This task covers:

a. Removal
b. Disassembly
c. Cleaning, Inspection, and Repair
d. Reassembly
e. Balancing
f. Installation

LOCATION	ITEM	ACTION	REMARKS
REMOVAL			
1. Circular compass assembly	Circular compass assembly	Remove circular compass assembly from carrying case.	Refer to figure 2-18.
DISASSEMBLY			
2. Circular compass assembly	Circular compass assembly	Disassemble	Refer to figure 6-1. Disassemble in sequence of key numbers.

CLEANING, INSPECTION, AND REPAIR

WARNING

Dry cleaning solvent, P-D-680, used to clean parts is potentially dangerous to personnel and property. Avoid repeated and prolonged skin contact. Do not use near open flame or excessive heat. Flash point of solvent is 100 °F. 138 °F. (38 °C. 59 °C.) Do not use P-D-680 to clean lens.

6-10. CIRCULAR COMPASS ASSEMBLY - MAINTENANCE INSTRUCTIONS (cont)

LOCATION	ITEM	ACTION	REMARKS
3. Circular compass assembly	Circular compass assembly	a. Clean metal parts with clean, lint-free cloth moistened with cleaning solvent. b. Clean cover glass, eye-piece lens, lens, and prism with dust brush or lens tissue. c. Clean carrying case with clean, lint-free cloth moistened with water. Dry thoroughly.	

6-10. CIRCULAR COMPASS ASSEMBLY - MAINTENANCE INSTRUCTIONS (cont)

LOCATION	ITEM	ACTION	REMARKS
		d. Inspect carrying case for defective snaps and zipper, and cuts and tears.	
		e. Inspect cover glass, eyepiece lens, lens, and prism for chips, cracks, scratches, and fungus etching.	
		f. Inspect all other parts for cracks, breaks, burrs, scratches, rust and corrosion, and damaged threads.	
		g. Replace defective parts.	

6-10. CIRCULAR COMPASS ASSEMBLY - MAINTENANCE INSTRUCTIONS (cont)

LOCATION	ITEM	ACTION	REMARKS
REASSEMBLY			
4. Circular compass assembly	Circular compass assembly	Reassemble	Refer to figure 6-1. Reassemble in reverse of key number sequence.
BALANCING			
5. Circular compass assembly	Compass circle	a. Install circular compass assembly on theodolite.	Refer to figure 3-5.
		b. Level theodolite	Refer to figure 2-21.
		c. Release clamp assembly	Refer to figure 2-18.
		d. Remove three machine screws (49) and washers (50) and lift off compass housing (24)	Refer to figure 6-1.

6-10. CIRCULAR COMPASS ASSEMBLY - MAINTENANCE INSTRUCTIONS (cont)

LOCATION	ITEM	ACTION	REMARKS
		e. Rotate release knob counter-clockwise and hold to lower compass circle (32, fig. 6-1) on to pivot (33, fig. 6-1).	Refer to figure 2-18.
		f. Carefully loosen four machine screws (28) and slide four balancing weights (29 and 30) in their grooves to balance compass circle (32).	Refer to figure 6-1.
		g. Carefully tighten four machine screws (28).	Refer to figure 6-1.
		h. Slowly rotate circular compass assembly through 3600, observe that the gap	Refer to figure 6-1.

6-10. CIRCULAR COMPASS ASSEMBLY - MAINTENANCE INSTRUCTIONS (cont)

LOCATION	ITEM	ACTION	REMARKS
		between the compass circle (32) and clamping ring assembly remains the same. If not, repeat steps f and g.	
		i. Release release knob.	Refer to figure 2-18.
		j. Secure compass housing (24) to bottom cover (42) with three machine screws (49) and washers (50).	Refer to figure 6-1.
		k. Screw in clamp assembly.	Refer to figure 2-18.
		l. Remove circular compass assembly from theodolite.	

6-10. CIRCULAR COMPASS ASSEMBLY - MAINTENANCE INSTRUCTIONS (cont)

LOCATION	ITEM	ACTION	REMARKS
		m. Install carrying handle on theodolite.	
INSTALLATION			
6. Circular compass assembly	Circular compass assembly	Install circular compass assembly in carrying case.	Refer to figure 2-18.

Section VI. PREPARATION FOR STORAGE AND SHIPMENT

6-11. GENERAL This section contains the information necessary to prepare the equipment for storage and shipment.

6-12. PREPARATION FOR STORAGE AND SHIPMENT

a. Perform the preventive maintenance checks and services in accordance with para. 2-4.

b. Remove top from shipping crate.

c. Wrap tripod, rucksack, accessory case, and battery box assembly with wrapping material.

d. Place wrapped tripod, rucksack, accessory case, and battery box assembly in shipping crate with packing material.

e. Install top on shipping crate. Store shipping crate in a safe place.

f. Insure that desiccant in metal carrying case is blue. If desiccant is pink, replace or dehydrate desiccant.

g. Secure theodolite and tribrach assembly to metal carrying case base (fig. 2-8) using two levers.

h. Lower metal carrying case hood onto base and secure with clamps (fig. 2-7).

i. Place metal carrying case in shipping case (fig. 2-6).

j. Close shipping case cover (fig. 2-6) and secure with snap-lock.

APPENDIX A

REFERENCES

A-1. Painting

TM43-0139	Painting Instructions for Field Use

A-2. Shipment and Storage

TB740-97-2	Preservation of Mechanical Equipment for Shipment and Storage
TM740-90-1	Administrative Storage of Equipment
TM10-269	General Repair for Canvas and Webbing

A-3. Maintenance I

TM38-750	The Army Equipment Records System
TM5-6675-312-24P	Organizational, Direct and General Support, and Depot Maintenance Repair Parts and Special Tools List

A-4. Demolition

TM-750-244-3	Destruction of Equipment to Prevent Enemy Use

APPENDIX B

COMPONENTS OF END ITEM LIST

Section I. INTRODUCTION

1. SCOPE

This appendix lists integral components of and basic issue items for the theodolite to help you inventory items required for safe and efficient operation.

2. GENERAL

This Components of End Item List is divided into the following sections:

a. Section II. Integral Components of the End Item. These items, when assembled, comprise the theodolite and must accompany it whenever it is transferred or turned in. The illustrations will help you identify these items.

b. Section III. Basic Issue Items. These are the minimum essential items required to place the theodolite in operation, to operate it, and to perform emergency repairs. Although shipped separately packed they must accompany the theodolite during operation and whenever it is transferred between accountable officers. The illustrations will assist you with hard-to-identify items. This manual is your authority to requisition placement BII, based on TOE/MTOE authorization of the end item.

3. EXPLANATION OF COLUMNS

a. Illustration. This column is divided as follows:

(1) Figure Number. Indicates the figure number of the illustration on which the item is shown.

(2) Item Number. The number used to identify item called out in the illustration.

b. National Stock Number. Indicates the National stock number assigned to the item and which will be used for requisitioning.

c. Part Number. Indicates the primary number used by the manufacturer, which controls the design and characteristics of the item by means of its engineering drawings, specifications, standards, and inspection requirements to identify an item or range of items.

d. Description. Indicates the Federal item name and, if required, a minimum description to identify the item.

e. Location. The physical location of each item listed is given in this column. The lists are designed to inventory all items in one area of the major item before moving on to an adjacent area.

f. Usable on Code. "USABLE ON" codes are included to help you identify which component items are used on the different models. Identification of the codes used in these lists are:

Code	Used On
DCM	Model T1 6-75DEG
EAK	Model T16-84MIL

g. Quantity Required (Qty Reqd). This column lists the quantity of each item required for a complete major item.

h. Quantity. This column is left blank for use during an inventory. Under the Rcv'd column, list the quantity you actually receive on your major item. The Date columns are for your use when you inventory the major item at a later date; such as for shipment to another site.

Section II.

INTEGRAL COMPONENTS OF END ITEM

(1) ILLUSTRATION (a) FIGURE NO.	(b) FIGURE NO.	(2) NATIONAL STOCK NUMBER	(3) PART NO. & FSCM	(4) DESCRIPTION	(5) LOCATION	(6) USABLE ON CODE	(7) QTY REQD	(8) QUANTITY RCV'D	DATE	DATE	DATE
1-1			(89905)	Battery Box Assy		DCM	1				
			308574			EAK	1				
2-14			(89905)	Battery Dummy		DCM	2				
			310432			EAK	2				
			(89905)	Cap Objective		DCM	1				
			356106			EAK	1				
1-1			(89905)	Case, Metal,		DCM	1				
			376263	Carring		EAK	1				
1-1			(89905)	Case Shipping		DCM	1				
			370480			EAK	1				
1-1			(89905)	Compass assy		DCM	1				
			381122			EAK	1				
1-1			(89905)	Cover, Tripod,		DCM	1				
			319062	Head		EAK	1				
1-1			(89905)	Eyepiece Assy		DCM	1				
			199899			EAK	1				
1-1			(89905)	Eyepiece Prism		DCM	1				
			358293	Assy		EAK	1				
1-1			(89905)	Filter, Block,		DCM	1				
			370472	Eyepiece		EAK	1				
1-1			(89905)	Handlamp		DCM	1				
			369364			EAK	1				
3-5			(89905)	Handle Assy		DCM	1				
			372708			EAK	1				
1-1			(89905)	Lamp Assy		DCM	1				
			199898			EAK	1				
1-1			(89905)	Lamp, plug in		DCM	1				
			369365			EAK	1				

Section II.

INTEGRAL COMPONENTS OF END ITEM

(1) ILLUSTRATION (a) FIGURE NO.	(b) FIGURE NO.	(2) NATIONAL STOCK NUMBER	(3) PART NO. & FSCM	(4) DESCRIPTION	(5) LOCATION	(6) USABLE ON CODE	(7) QTY REQD	(8) QUANTITY RCV'D	DATE	DATE	DATE
1-1			(89905) 353600	Level, Telescope		DCM EAK	1 1				
2-12			(89905) 296672	Plumbbob		DCM EAK	1 1				
1-1			(89905) 205573	Rucksack		DCM EAK	1 1				
2-17			(89905) 376222	Sunshade		DCM EAK	1 1				
3-7			(89905) 372689	Tribrach		DCM EAK	1 1				
2-5			(89905) 312994	Tripod		DCM EAK	1 1				
1-1			(89905) 171315	Theodolite		DCM	1				
1-1			(89905)	Theodolite		EAK	1				

Section II.

BASIC ISSUE ITEMS

(1) ILLUSTRATION (a) FIGURE NO.	(b) FIGURE NO.	(2) NATIONAL STOCK NUMBER	(3) PART NO. & FSCM	(4) DESCRIPTION	(5) LOCATION	(6) USABLE ON CODE	(7) QTY REQD	(8) QUANTITY RCV'D	DATE	DATE	DATE
				TM 5-6675-312-14 Operator, Organiza-tional, Direct Support and General Support Maintenance Manual							
1-1			(89905) 109335	Brush		DCM EAK	1 1				
1-1			(89905) 166684	Chamois, Leather		DCM EAK	1 1				
1-1			(89905) 167226	Container, Grease		DCM EAK	1 1				
1-1			(89905) 311846	Cover, Plastic		DCM EAK	1 1				
1-1			(89905) 166370	Lamp, Incan-descent		DCM EAK	4 4				
1-1			(89905) 109334	Pin, Adjust-ing		DCM EAK	4 4				
1-1			(89905) 166794	Screwdriver, Jeweler		DCM EAK	2 2				
			(89905) 166494	Wrench, Tripod		DCM EAK	1 1				

APPENDIX C

MAINTENANCE ALLOCATION CHART

Section 1. INTRODUCTION

C-1. GENERAL

a. This section provides a general explanation of all maintenance and repair functions authorized at various maintenance levels.

b. Section II designates overall responsibility for the performance of maintenance functions on the identified end item or component and the work measurement time required to perform the functions by the designated maintenance level. The implementation of the maintenance functions upon the end item or component will be consistent with the assigned maintenance functions.

c. Section III lists the tools and test equipment required for each maintenance function as referenced from Section II.

C-2. EXPLANATION OF COLUMNS IN SECTION II

a. Column 1, Group Number. Column 1 lists group numbers to identify related components, assemblies, sub-assemblies, and modules and their next higher assembly. The applicable groups are listed in the MAC in disassembly sequence beginning with the first group removed.

b. Column 2, Component/Assembly. This column contains the noun names of components, assemblies, sub-assemblies and modules for which maintenance is authorized.

c. Column 3, Maintenance Functions. This column lists the functions to be performed on the item listed in Column 2. The maintenance functions are defined as follows:

(1) Inspect. To determine serviceability of an item by comparing its physical, mechanical, or electrical characteristics with established standards through examination.

(2) Test. To verify serviceability and detect incipient failure by measuring the mechanical or electrical characteristics of an item and comparing those characteristics with prescribed standards.

(3) Service. Operations required periodically to keep an item in proper operating condition, i.e., to clean (decontaminate), to preserve, to drain, to paint, or to replenish fuel, lubricants, hydraulic fluids, or compressed air supplies.

(4) Adjust. To maintain within prescribed limits, by bring into proper or exact position, or by setting the operating characteristics to specified parameters.

(5) Align. To adjust specified variable elements of an item to bring about optimum desired performance.

(6) Calibrate. To determine and cause corrections to be made or to be adjusted on instruments or test measuring and diagnostic equipments used in precision measurement. Consists of comparison of two instruments, one of which is a certified standard of known accuracy, to detect and adjust any discrepancy in the accuracy of the instrument being compared.

(7) Install. The act of emplacing, seating, or fixing into position an item, part, or module (component or assembly) in a manner to allow the proper functioning of an equipment or system.

(8) Replace. The act of substituting a serviceable like type part, subassembly, or module (component or assembly) for an unserviceable counterpart.

(9) Repair. The application of maintenance services (inspect, test, service, adjust, align, calibrate, or replace) or other maintenance actions (welding, grinding, riveting, straightening, facing, remachining or resurfacing) to restore serviceability to an item by correcting specific damage, fault, malfunction, or failure in a part, sub-assembly, module (component or assembly), end item, or system.

(10) Overhaul. That maintenance effort (service/action) necessary to restore an item to a completely serviceable/operational condition as prescribed by maintenance standards (i.e., DMWR) in appropriate technical publications. Overhaul is normally the highest degree of maintenance performed by the Army. Overhaul does not normally return an item to a like new condition.

(11) Rebuild. Consists of those services/actions necessary for the restoration of unserviceable equipment to a like new condition in accordance with original manufacturing standards. Rebuild is the highest degree of material maintenance applied to Army equipment. The rebuild operation includes the act of returning to zero those age measurements (hours/miles, etc.) considered in classifying Army equipments/components.

d. Column 4, Maintenance Level. This column is made up of sub-columns for each category of maintenance. Work time figures are listed in these sub-columns for the lowest level of maintenance authorized to perform the function listed in Column 3. These figures indicate the average active time required to perform the maintenance function at the indicated category of maintenance under typical field operating conditions.

e. Column 5, Tools and Equipment. This column is provided for referencing by code, the common tool sets (not individual tools) special tools, test and support equipment required to perform the designated function.

C-3. EXPLANATION OF COLUMNS IN SECTION III

a. Column 1, Reference Code. This column consists of an Arabic number listed in sequence from Column 5 of Section II. The number references the common tool sets, special tools and test equipment requirements.

b. Column 2, Maintenance Level. This column shows the lowest category of maintenance authorized to use the special tools or test equipment.

c. Column 3, Nomenclature. This column lists the name or identification of the common tool sets, special tools, or test equipment.

d. Column 4, National/Nato Stock No. (NSN). This column is provided for the NSN of common tool sets, special tools and test equipment listed in the nomenclature column.

e. Column 5, Tool Number. This column lists the manufacturer's code and part number of tools and test equipment.

Section II. MAINTENANCE ALLOCATION CHART

(1) Group Number	(2) Component/ Assembly	(3) Maintenance Function	(4) Maintenance Level C	O	F	H	D	(5) Tools and Equipment	(6) Remarks
01	Cases, Shipping and Carrying								
0101	Shipping Case	Inspect		0.1					
		Replace		0.1					
		Repair			0.2				
0102	Carrying Case	Inspect		0.1					
		Replace		0.1					
		Repair		0.2					
02	Accessory Items								
0201	Battery Box	Inspect		0.1					
		Install	0.1						
		Replace			0.2				
		Repair			0.1				
0202	Rucksack	Inspect		0.1					
		Service		0.3					
		Replace		0.1					
0203	Case Accessory	Inspect		0.1					
		Service		0.3					
		Replace		0.1					
0204	Eyepiece Prism and Sunglass	Inspect		0.1					
		Service		0;2					
		Replace		0.1					
0205	Handlamp Assembly	Inspect		0.1					
		Install	0.1						
		Repair		0.2					
		Replace		0.1					
0206	Illumination Assembly	Inspect		0.1					
		Install	0.1						
		Repair		0.2					
		Replace		0.1					
0207	Miscellaneous Items	Inspect		0.1					
		Replace		0.1					

* SUBCOLUMNS ARE AS FOLLOWS: C - OPERATOR/CREW; O - ORGANIZATIONAL;
F - DIRECT SUPPORT; H *GENERAL SUPPORT; D -DEPOT
* * INDICATES WT/MH REQUIRED

Section II. MAINTENANCE ALLOCATION CHART

(1) Group Number	(2) Component/ Assembly	(3) Maintenance Function	(4) Maintenance Level C	O	F	H	D	(5) Tools and Equipment	(6) Remarks
0208	Compass and Compass Bridge Assembly and Case	Inspect		0.1					
		Install	0.1						
		Repair				0.1			
		Replace		0.1					
0209	Telescope Level Assembly	Inspect	0.1						
		Repair		0.5					
		Replace	0.1						
		Adjust	'0.2						
03	Theodolite								
0301	Tribrach Assembly	Inspect		0.1					
		Adjust		0.1					A
		Install	0.1						
		Repair					*	8,14,15	
		Overhaul					*		
0302	Horizontal Circle Clamp, Assembly and Circled Prism Assembly	Inspect					*		
		Adjust					*	8,9,10	
		Repair					*		
		Replace					*		
0303	Horizontal Clamp, slow motion screw, Circle housing and Inner base housing Assembly	Inspect					*	8	
		Repair					*		
		Replace					*		
0304	Horizontal Circle Assembly and Outer Vertical Axis	Inspect					*	5,6,7,8,10	
		Repair					*		
		Replace					*		
		Align					*		
0305	Optical Plumb Device and Eyepiece Assembly	Inspect					*	4,8	
		Repair					*		
		Replace					*		
		Adjust					*		
0306	Left Side Support area Assembly with Compensator	Inspect					*	3,8	
		Adjust					*		
		Repair					*		
		Replace					*		
0307	Right Side Cover, Vertical Clamp Slow-motion Screw	Inspect					*	3,8	
		Adjust					*		
		Repair					*		
		Replace					*		

Section II. MAINTENANCE ALLOCATION CHART

(1) Group Number	(2) Component/ Assembly	(3) Maintenance Function	(4) Maintenance Level C	O	F	H	D	(5) Tools and Equipment	(6) Remarks
0308	Plate Level Assem-	Inspect	0.1					8	
	bly	Adjust	0.3						B
		Repair					*		
		Replace					*		
0309	Microscope Assembly	Inspect					*	8,11	
		Repair					*		
		Replace					*		
0310	Telescope	Inspect					*	8,12,13	
	Focus objective,	Align					*	16	
	Reticule and Eye-	Repair					*		
	piece Assemblies	Replace					*		

* Work times are included in the DMWR.

Section III. TOOL AND TEST EQUIPMENT REQUIREMENTS

(1) Reference Code	(2) Maintenance Level	(3) Nomenclature	(4) National/NATO Stock Number	(5) Tool Number
1	D	Adapter for Optical Diopter P/N 266345		(89905) 377411
2	D	Device, adjusting, Cam Centering Telescope		(89905) 377306
3	D	Device, adjusting, Compensator		(89905) 366875
4	D	Device, Centering, Optical Plummet		(89905) 363766
5	D	Device, Universal Circle Centering		(89905) 211399
6	D	Device, Universal Circle Centering, Ax		(89905) 381428
7	D	Device, Zero setting, Vertical Circle		(89905) 377316
8	D	Key, Socket Head Screw		(89905) 352700
9	D	Optical Diopter, Axis Prism		(89905) 266345
10	D	Optical Diopter, Optical Plumment and Center Point		(89905) 200035
11	D	Pliers, fine drives and reading microscope		(89905) 213286
12	D	Pliers, Retaining Ring, Axle Box		(89905) 381791
13	D	Spanner, Axle prism, Adjustment mount		(89905) 377319
14	D	Spanner, footscrew		(89905) 377320
15	D	Spanner, Footscrew, Axial Ball Bearing		(89905) 366957
16	D	Spanner, Locking Ring, Telescope Cross Plate		(89905) 105473

Section III. REMARKS

Maintenance Allocation Chart

Reference Code	Remarks
A.	Adjustment consist of adjusting circular level vial only.
B.	Adjustment consist of adjusting plate level adjusting screw only.

APPENDIX D

ADDITIONAL AUTHORIZATION LIST

Section I. INTRODUCTION

D-1. Scope

This appendix lists additional items you are authorized for the support of the theodolite.

D-2. General

This list identifies items that do not have to accompany the theodolite and that do not have to be turned in with it. These items are all authorized to you by CTA, MTOE, TDA, or JTA.

D-3. Explanation of Listing

National stock numbers, descriptions, and quantities are provided to help you identify and request the additional items you require to support this equipment.

Section II.

ADDITIONAL AUTHORIZATION LIST

(1) National Stock Number	(2) Description FSCM & Part Number Usable on Code	(3) U/M	(4) Qty Auth
6135-00-120-1020	BA30 (81349) Battery Dry 1.5 Volts	EA	8

APPENDIX E

EXPENDABLE SUPPLIES AND MATERIALS LIST

Section I. INTRODUCTION

E-1. Scope

This appendix lists expendable supplies and materials you will need to operate and maintain the theodolite. These items are authorized to you by CTA 50-970, Expendable Items (Except Medical, Class V, Repair Parts, and Heraldic Items).

E-2. Explanation of Columns

a. Column 1 Item number. This number is assigned to the entry in the listing and is referenced in the narrative instructions to identify the material (e.g., "Use cleaning compound, item 5, App. D").

b. Column 2 Level. This column identifies the lowest level of maintenance that requires the listed item.

C - Operator/Crew

0 - Organizational Maintenance

F - Direct Support Maintenance

H - General Support Maintenance

c. Column 3 National Stock Number. This is the National stock number assigned to the item; use it to request or requisition the item.

d. Column 4 Description. Indicates the Federal item name and, if required, a description to identify the item. The last line for each item indicates the part number followed by the Federal Supply Code for Manufacturer (FSCM) in parentheses, if applicable.

e. Column 5 Unit of Measure (U/M). Indicates the measure used in performing the actual maintenance function. This measure is expressed by a two-character alphabetical abbreviation (e.g., ea, in, pr). If the unit of measure differs from the unit of issue, requisition the lowest unit of issue that will satisfy your requirements.

Section II

EXPENDABLE SUPPLIES AND MATERIALS LIST

(1) Item Number	(2) Level	(3) National Stock Number	(4) Description	(5) U/M
1.	C, 0	6810-00-223-2739	Acetone, Technical, 1 pt can; Fed Spec MMM-A-185	PT
2.	C, 0	6850-00-664-5685	Cleaning Solvent Fed Spec PD-680	QT
3.	C, 0	7920-00-401-8034	Cloth, Lint-free, Non Abrasive, General Purpose Part No. 1001	BX
4.	C, 0	6850-00-680-2233	Desiccant Activated	LB
5.	C, 0	9150-00-985-7244	Grease, Instrument and Aircraft (GIA) MIL-G-23827	TU
6.	C, 0	6640-00-597-6745	Paper, Lens Tissue (4 in.x 6 in) 50 sheets	PK
7.	C, 0	9150-00-252-6382	Lubrication Oil Watch making	BT
8.	C, 0	5120-01-018-5908	Orange Sticks 13218E3063 (97403)	PK

ALPHABETICAL INDEX

	Paragraph	Page No.
A		
Accessory Case	4-14	
Adjusting Pins and Screwdriver	4-15	
Assembly and Preparation for Use	2-6	
B		
Battery Box Assembly	5-11	
Black Eyepiece Filter	4-16	
C		
Circular Compass Assembly	4-23, 6-9	
Common Tools and Equipment	4-1, 5-1, 6-1	
Controls and Indicators	2-2	
D		
Destruction of Army Material to Prevent Enemy Use	1-3	
Dust Brush, Chamois Skin, Dust/Rain Cover	4-17	
E		
Equipment Characteristics, Capabilities and Features	1-7	
Equipment Data	1-10	
Eyepiece Prism Assembly	4-19	

ALPHABETICAL INDEX (cont)

	Paragraph	Page No.
G		
General	2-1, 2-3, 2-5, 2-10, 3-1, 4-8, 4-10, 4-26, 5-8, 5-10, 5-14, 6-8, 6-10	
Grease Container	4-18	
H		
Handlamp	4-21	
I		
Initial Adjustments and Daily Checks	2-7	
Installation	3-2	
Installation Instructions	4-5, 5-5, 6-5	
Introduction	4-6, 5-6, 6-6	
L		
Location and Description of Major Components	1-8	
M		
Maintenance Forms, Record, and Reports	1-2	
Metal Carrying Case	4-12	
N		
Nomenclature Cross-Reference List	1-5	

ALPHABETICAL INDEX (cont)

	Paragraph	Page No.
O		
Operating Procedures	2-8	
Operation Under Unusual Conditions	2-11	
P		
Plug-in Lamp	4-22	
Preparation for Movement	2-9	
Preparation for Storage and Shipment	4-27, 5-15, 6-11	
Preparation for Storage or Shipment	1-4	
Preventive Maintenance Checks and Services	2-4, 4-7, 5-7, 6-7	
R		
Repair Parts	4-2, 5-2, 6-2	
Reporting, Equipment Improvement		
Recommendations (EIR)	1-6	
Rucksack	4-13	
S		
Safety, Care, and Handling	1-11	
Scope	1-1	
Service Upon Receipt	4-4, 5-4, 6-4	
Shipping Case	4-11	
Site Requirements	4-3, 5-3, 6-3	
Sunshade	4-20	

ALPHABETICAL INDEX (cont)

	Paragraph	Page No.
T		
Tribrach Assembly	4-24, 5-13	
Tripod	4-25, 5-12	
Troubleshooting	4-9, 5-9	

By Order of the Secretary of the Army:

E. C. MEYER
General, United States Army
Chief of Staff

Official:

J. C. PENNINGTON
Major General, United States Army
The Adjutant General

DISTRIBUTION:
To be distributed in accordance with DA Form 12-25-A, Operator Requirements for Surveying Equipment.

¶ U.S. GOVERNMENT PRINTING OFFICE: 1980-665-134/2140

RECOMMENDED CHANGES TO EQUIPMENT TECHNICAL PUBLICATIONS

SOMETHING WRONG WITH PUBLICATION

FROM: (PRINT YOUR UNIT'S COMPLETE ADDRESS)

DATE SENT

PUBLICATION NUMBER	PUBLICATION DATE	PUBLICATION TITLE

BE EXACT PIN-POINT WHERE IT IS

PAGE NO.	PARA-GRAPH	FIGURE NO.	TABLE NO.

IN THIS SPACE, TELL WHAT IS WRONG AND WHAT SHOULD BE DONE ABOUT IT.

PRINTED NAME, GRADE OR TITLE AND TELEPHONE NUMBER	SIGN HERE

DA FORM 1 JUL 79 2028-2

PREVIOUS EDITIONS ARE OBSOLETE.

P.S.--IF YOUR OUTFIT WANTS TO KNOW ABOUT YOUR RECOMMENDATION MAKE A CARBON COPY OF THIS AND GIVE IT TO YOUR HEADQUARTERS.

The Metric System and Equivalents

Linear Measure

1 centimeter = 10 millimeters = .39 inch
1 decimeter = 10 centimeters = 3.94 inches
1 meter = 10 decimeters = 39.37 inches
1 dekameter = 10 meters = 32.8 feet
1 hectometer = 10 dekameters = 328.08 feet
1 kilometer = 10 hectometers = 3,280.8 feet

Weights

1 centigram = 10 milligrams = .15 grain
1 decigram = 10 centigrams = 1.54 grains
1 gram = 10 decigram = .035 ounce
1 decagram = 10 grams = .35 ounce
1 hectogram = 10 decagrams = 3.52 ounces
1 kilogram = 10 hectograms = 2.2 pounds
1 quintal = 100 kilograms = 220.46 pounds
1 metric ton = 10 quintals = 1.1 short tons

Liquid Measure

1 centiliter = 10 milliters = .34 fl. ounce
1 deciliter = 10 centiliters = 3.38 fl. ounces
1 liter = 10 deciliters = 33.81 fl. ounces
1 dekaliter = 10 liters = 2.64 gallons
1 hectoliter = 10 dekaliters = 26.42 gallons
1 kiloliter = 10 hectoliters = 264.18 gallons

Square Measure

1 sq. centimeter = 100 sq. millimeters = .155 sq. inch
1 sq. decimeter = 100 sq. centimeters = 15.5 sq. inches
1 sq. meter (centare) = 100 sq. decimeters = 10.76 sq. feet
1 sq. dekameter (are) = 100 sq. meters = 1,076.4 sq. feet
1 sq. hectometer (hectare) = 100 sq. dekameters = 2.47 acres
1 sq. kilometer = 100 sq. hectometers = .386 sq. mile

Cubic Measure

1 cu. centimeter = 1000 cu. millimeters = .06 cu. inch
1 cu. decimeter = 1000 cu. centimeters = 61.02 cu. inches
1 cu. meter = 1000 cu. decimeters = 35.31 cu. feet

Approximate Conversion Factors

To change	*To*	*Multiply by*	*To change*	*To*	*Multiply by*
inches	centimeters	2.540	ounce-inches	Newton-meters	.007062
feet	meters	.305	centimeters	inches	.394
yards	meters	.914	meters	feet	3.280
miles	kilometers	1.609	meters	yards	1.094
square inches	square centimeters	6.451	kilometers	miles	.621
square feet	square meters	.093	square centimeters	square inches	.155
square yards	square meters	.836	square meters	square feet	10.764
square miles	square kilometers	2.590	square meters	square yards	1.196
acres	square hectometers	.405	square kilometers	square miles	.386
cubic feet	cubic meters	.028	square hectometers	acres	2.471
cubic yards	cubic meters	.765	cubic meters	cubic feet	35.315
fluid ounces	milliliters	29,573	cubic meters	cubic yards	1.308
pints	liters	.473	milliliters	fluid ounces	.034
quarts	liters	.946	liters	pints	2.113
gallons	liters	3.785	liters	quarts	1.057
ounces	grams	28.349	liters	gallons	.264
pounds	kilograms	.454	grams	ounces	.035
short tons	metric tons	.907	kilograms	pounds	2.205
pound-feet	Newton-meters	1.356	metric tons	short tons	1.102
pound-inches	Newton-meters	.11296			

Temperature (Exact)

°F	Fahrenheit temperature	5/9 (after subtracting 32)	Celsius temperature	°C

PIN: 045657-001