DEPARTMENT OF THE ARMY SUPPLY BULLETIN

AMMUNITION INSPECTION PROCEDURES FOR

CHEMICAL BOMB MARK 116 MOD O

This copy is a reprint which includes current pages from Changes 1 and 2.

HEADQUARTERS DEPARTMENT OF THE ARMY
DECEMBER 1979

DEPARTMENT OF THE ARMY SUPPLY BULLETIN

AMMUNITION INSPECTION PROCEDURES FOR CHEMICAL BOMB MARK 116 MOD O

Headquarters, Department of the Army, Washington, DC
24 July 1981

SB 742-1325-94-20, 28 December 1979, is changed as follows:
Page 4-2. paragraph 4-6.

Subparagraph *b*, change the second sentence to read, "These samples, after test with white/blue band tubes, shall be monitored with bubblers to the 0.0001 MG/M level and, if results are negative, opened.

Subparagraphs c and d are added as follows:
c. Storage containers with agent concentration exceeding 0.0001 MG/M^3 but less than 0.2 MG/M^3 will be marked to indicate date of sampling and results.

WARNING
DO NOT REMOVE SAFETY PINS OR PULL FIN BLADE RELEASE WIRE. THE FINS ARE SPRING LOADED AND COULD CAUSE SERIOUS INJURY TO PERSONNEL.

d. Visual Inspection.

(1) The fins shall be inspected for distortion or any irregularity which could hamper freedom of movement. Particular attention shall be paid to the pivot points to ensure that they are free of corrosion.

(2) Inspect the tail assembly clamping bolts and clamps for corrosion to ensure freedom of movement.

(3) The fuze cavity shall be inspected for leaks/corrosion. Threaded surfaces shall be inspected for burrs/nicks. There are electrical leads for the M990 fuzes stored in the fuze cavity. These will be removed, stored separately and reported for disposition.

(4) The burster tube shall be inspected for leaks/corrosion and the threaded surfaces for burrs/nicks. The O ring on the tailplug will be inspected for serviceability.

(5) Inspect areas where a metal to metal seal or metal to soft goods seal occurs to ensure a good seal can be maintained.

Paragraph 4-7, subparagraph *b*. The last sentence is changed to read, "In addition to the blue/white band tube test, 20 of these samples will be monitored with bubblers to the 0.0001 MG/M^3 level. In addition those containers previously identified as having an agent concentration between 0.0001 MG/M^3 will be monitored with bubblers.

Subparagraph *c* is added as follows:
c. Items which are tested for agent leakage will have the container jam nut retorqued to assure a torque of 100 inch-pounds. Containers with negative agent leakage test will have the container pressurization test performed in accordance with paragraph 6-4k(6).

Page 4-3, paragraph 4-11. Subparagraph *c* is superseded as follows:
c. Leaking munitions, 0.2 MG/M^3 or greater agent concentration, will be declared unserviceable and stored in accordance with paragraph 4-13. In addition, the leaker ammunition lot will be 100 percent bubbler tested to the 0.0001 MG/M^3 level. Those containers with agent concentration exceeding 0.0001 MG/M^3 but less than 0.2 MG/M^3, will be marked to indicate date of sampling and results.

Page 6-1, paragraph 6-3.

Subparagraph c is superseded as follows:
c. Visually inspect bomb for damage or leakage. Particular attention shall be given to the filling port and burster tube areas.

Page 6-2, paragraph 6-4.

Subparagraph b is superseded as follows:

b. Remove rubber loading ring, plywood forward filler and aft filler, and polyethylene foam forward cushion and aft cushion from container (see fig. 3-1). Inspect for completeness and serviceability.

Subparagraph *h* is superseded as follows:

h. Insert plywood forward filler into container between forward cushion and loading ring. Hold loading ring in place to avoid displacing it. Inspect container gasket to ensure proper sealing capability. Primary concern is material resiliency, missing pieces and positioning. Inspect container strap assembly for corrosion and hinged joints freedom of movement.

Subparagraph *i* (6) is added as follows:

(6) Inspect container latches for proper operation and freedom of movement.

By Order of the Secretary of the Army:

E. C. MEYER
General, United States Army
Chief of Staff

Official:

ROBERT M. JOYCE
Brigadier General, United States Army
The Adjutant General

DISTRIBUTION:
To be distributed in accordance with Special List.

DEPARTMENT OF THE ARMY SUPPLY BULLETIN

AMMUNITION INSPECTION PROCEDURES
FOR
CHEMICAL BOMB MARK 116 MOD O

Headquarters, Department of the Army, Washington, DC
30 June 1983

SB 742-1325-94-20, 28 December 1979, and Change 1, 24 July 1981, is changed as follows:

Page 4-2, paragraph 4-7.

Subparagraph *b*, change the last sentence to read, "In addition, those containers previously identified as having an agent concentration between 0.0001 MG/M^3 and 0.2 MG/M^3 will be monitored with bubblers."

Subparagraph *c* is superseded as follows. 6c. Containers with a negative agent leakage test will have the container pressurization test performed in accordance with paragraph 6-4k(6). Any containers failing the pressurization test will be removed from the stack and have the jam nuts retorqued to assure a torque of 100 inch-pounds.

Page 4-2, paragraph 4-8.

Change the first two sentences to subparagraph *a*.

Subparagraph *b* is added as follows:

b. Containers with a negative agent leakage est will have the container pressurization test performed in accordance with paragraph 6-4k(6). Any containers failing the pressurization test will have the jam nuts retorqued to assure a torque of 100 inch-pounds.

By Order of the Secretary of the Army:

E. C. MEYER
General, United States Army
Chief of Staff

Official:

ROBERT M. JOYCE
Major General, United States Army
The Adjutant General

Distribution:

To be distributed in accordance with DA Form 12-34, requirements for SB 740 Series: Storage Serviceability Standards.

SUPPLY BULLETIN

No. 742-1325-94-20

HEADQUARTERS
DEPARTMENT OF THE ARMY
WASHINGTON, DC, *28 December 1979*

Ammunition Inspection Procedures For CHEMICAL BOMB MARK 116 MOD O

SECTION		Paragraph	Page
I	INTRODUCTION		
	Weapon	1-1	1-1
	Purpose and scope	1-2	1-1
	Applicable documents	1-3	1-1
II	DESCRIPTION		
	Physical characteristics	2-1	2-1
	Bomb body	2-2	2-1
	Burster charge	2-3	2-2
	Fuzes	2-4	2-2
	Operation	2-5	2-2
III	SUPPORT EQUIPMENT AND SPECIAL TOOLS		
	Hand tools	3-1	3-1
	Handling equipment	3-2	3-1
	Special safety items	3-3	3-1
	Containers	3-4	3-1
IV	SAFETY AND INSPECTION		
	Hazard	4 -1	4-1
	General	4-2	4-1
	Types of inspections	4-3	4-1
	Initial receipt and receipt inspections	4-4	4-1
	Inspection of chemical bomb	4-5	4-1
	Periodic Inspection	4-6	4-2
	Storage Monitoring (SMI)	4-7	4-2
	Pre-Issue Inspection	4-8	4-2
	Receipt Inspection	4-9	4-2
	Special Inspections	4-10	4-2
	Tests for Leakage	4-11	4-2
	Documentation	4-12	4-2
	Special Inspections	4-13	4-3
V	SPECIAL HANDLING PROCEDURES		
	Handling Techniques	5-1	5-1
VI	UNPACKING AND REPACKING		
	Sequence of operation	6-1	6-1
	Unpacking	6-2	6-1
	Unpack chemical bomb	6-3	6-1
	Repacking	6-4	6-2
APPENDIX A	SUPPLEMENTAL PUBLICATIONS,		A-1

LIST OF ILLUSTRATIONS

Figure		Page
1-1	Chemical Bomb MK 116 MOD O	1-1
2-1	Cutaway View of Chemical Bomb	2-1
2-2	Bomb Bursters	2-2
2-3	Mechanical Fuze M904E2	2-3
2-4	Assembled Electric Fuze M990D	2-3
3-1	Shipping and Storage Container MK 398 MOD O	3-2
3-2	Shipping and Storage Container MK 417 MOD O	3-3

LIST OF TABLES

Table		Page
I	Hand Tools	3-1
II	Handling Equipment	3-1

SECTION I

INTRODUCTION

1-1. Weapon. This supply bulletin contains information on the Chemical Bomb MK 116 MOD O (Wet-eye), figure 1-1.

1-2. Purpose and Scope. *a. Purpose*. This supply bulletin, when used in conjunction with SB 742-1, provides a method for determining the serviceability and safety in storage of Bomb, Chemical Mark 116 MOD O, GB Filled (w/o fuze and burster).

b. Scope. The provisions of this supply bulletin are mandatory for use in determining the serviceability and safety in storage of Bomb, Chemical, Mark 116 MOD O, GB Filled (w/o fuze and burster), regardless of condition code, accountability or owning service.

1-3. Applicable Documents. The following documents form a part of this bulletin to the extent specified.

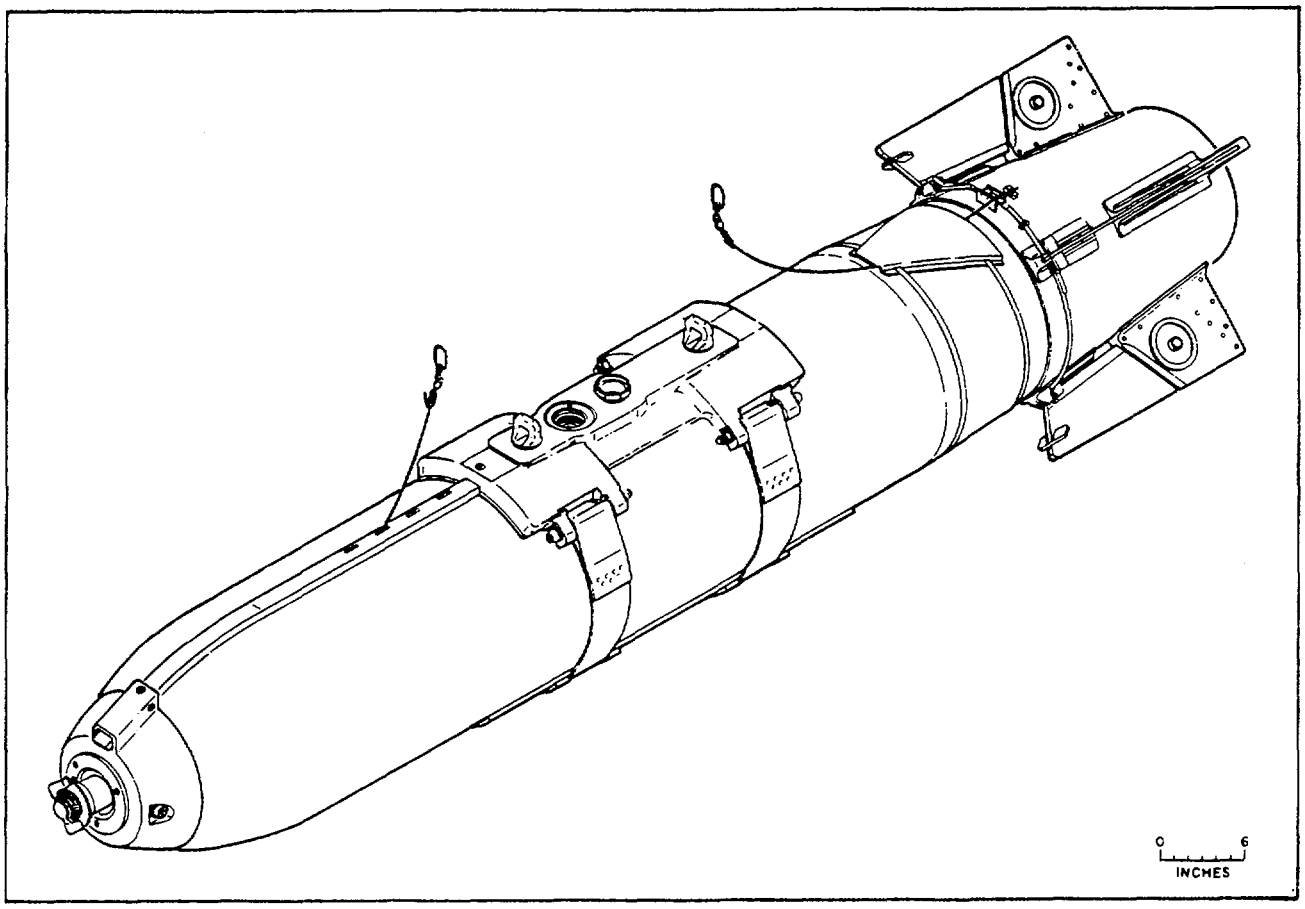

Figure 1-1. Chemical bomb MK 116MOD O.

DEPARTMENT OF THE ARMY

ARMY REGULATIONS

AR 50-6	- Chemical Surety Program
AR 380-5	- Information Security Program Regulation
AR 380-86	- Classification of Chemical Warfare and Biological Research Data
AR 750-25	- Army Metrology and Calibration System
SUPPLY BULLETIN	
SB 742-1	- Ammunition Surveillance Procedures
FIELD MANUAL	
FM 3-21	- Chemical Accident Contamination Control
FM 3-9	- Military Chemistry and Chemical Compounds
TECHNICAL MANUALS	
TM 3-220	- Chemical, Biological and Radiological (CBR) Decontamination
TM 3-250	- Storage, Shipment and Handling and Disposal of Chemical Agents and Hazardous Chemicals
TM 38-750	- The Army Maintenance Management System
TM 743-200	- Storage and Materials Handling (Department of Defense)
TM 743-200-1	- Storage and Materials Handling (Department of the Army)
TM 9-1300-206	- Ammunition and Explosive Standards
TM 8-285	- Treatment of Chemical Agent Casualties and Conventional Military Chemical Injuries
TM 10-277	- Protective Clothing-Chemical Operations

SECTION II

DESCRIPTION

2-1. Physical Characteristics. The Chemical Bomb Mk 116 MOD O, figure 2-1, is a high agent-to-weight ratio bomb filled with the chemical agent Sarin (GB). The chemical bomb is fuzed with a Mechanical Fuze M904E2 or an Electrical Fuze M990D. Weapon stability is achieved by four folded, spring-loaded fins, which are extended upon release from the air-craft. Four Bomb Bursters Mk 5 MOD O explosively disseminate the chemical agent upon impact. Physical data on the chemical bomb are as follows:

(1) Length (fins folded), inches 92.65
(2) Diameter, inches 14.00
(3) Tail Assembly Span, inches
(a) Fins Folded..... 20.70
(b) Fins Open..... 35.00
(4) Weight, pounds
(a) Gross 562.50
(b) GB Agent.....347.50
(c) Fuze and Bursters.....38.50
(d) Empty.....176.50

2-2. Bomb Body. The bomb body has an 0.125-inch-thick aluminum alloy wall. Its external components are tail assembly, counterweight assembly, suspension assembly, and conduit. Inside the bomb body are a payload of GB agent, bulkheads, a burster tube, and a void-control tube. The counterweight assembly consists of a counterweight and rubber buffer pad, which are permanently attached to the bomb body by three Allenhead screws, A nose cap is

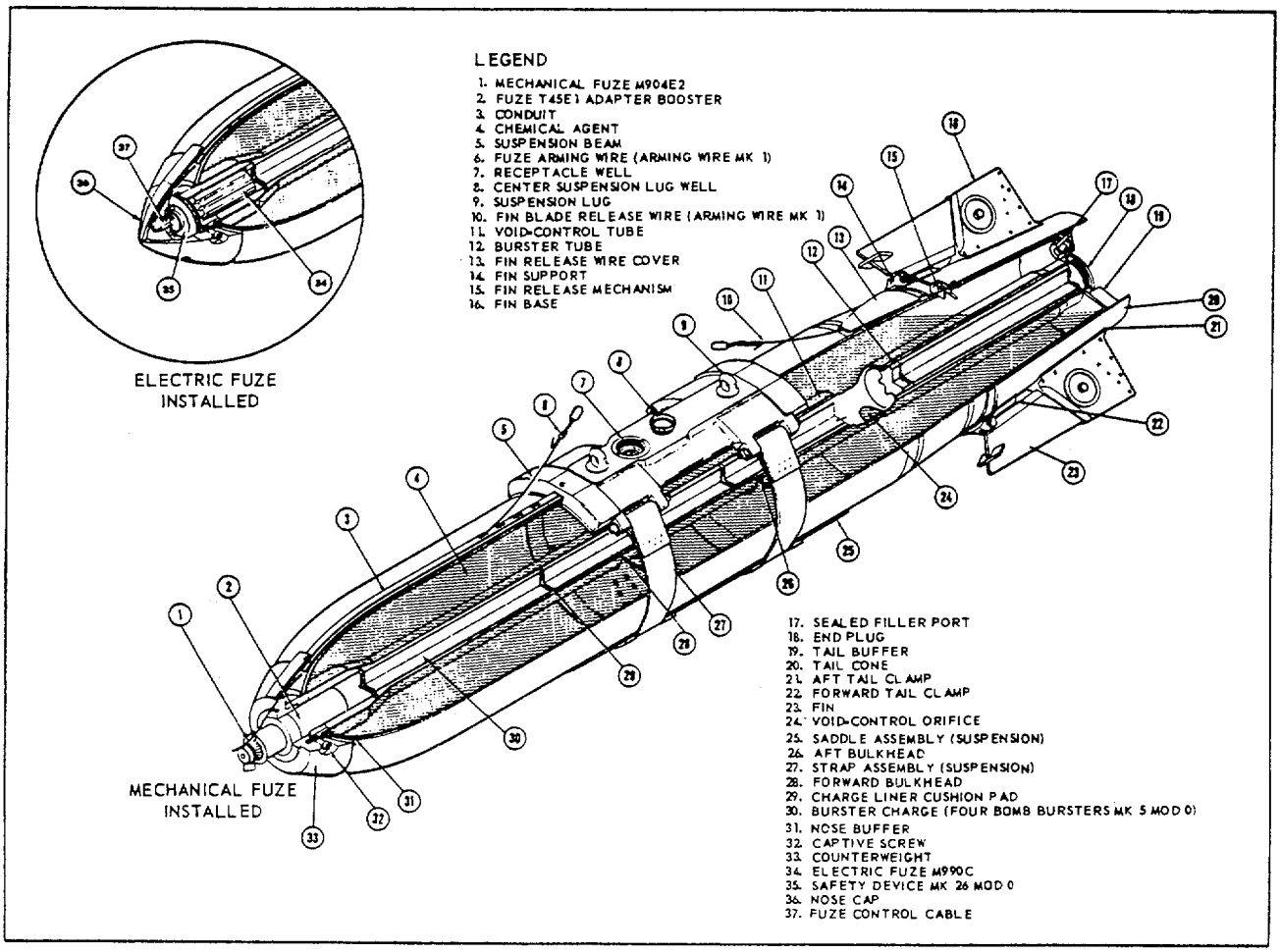

Figure 2-1. Cutaway view of chemical bomb.

installed when the electric fuze is used. The tail assembly consists of a tail cone, four fins, and a fin release mechanism, and is secured to the bomb body with two clamps. Each of the four spring-loaded fins is retained in the folded position by the fin release mechanism, which has a latching mechanism and safety pin. A fin locking mechanism locks the fins in the extended position. A synthetic rubber tail buffer is cemented and clipped to the aft end of the bomb body. An end plug provides access for loading the bursters through the center of the tail buffer. The suspension assembly consists of a suspension beam, two adjustable steel strap assemblies, two suspension lugs, and a saddle. A threaded socket provides access to the electrical charging receptacle well. A void-control tube, around the burster tube between the aft bulkhead and the tail, minimizes any shift in the center of gravity during flight.

2-3. Burster Charge. The burster charge consists of four Bomb Bursters Mk 5 MOD O, figure 2-2. They are installed end-to-end in the burster tube and extend from the fuze well to the tail of the bomb. Each bomb burster is composed of approximately six pounds of Composition B explosive cast into an aluminum, star-shaped case.

2-4. Fuzes. *a. Mechanical Fuze*. The Mechanical Fuze M904E2, figure 2-3, is used with the T45E1 adapter booster and the T2E3 nondelay element (instantaneous). *b. Electrical Fuze*. The Electrical Fuze M990D, figure 2-4, consists of the Electrical Fuze M990C with the Safety Device Mk 26 MOD O installed and is used with a connector adapter. Fuze Function Control AN/AWW-1 is required when this fuze is used.

2-5. Operation. The chemical bomb is used for massive delivery of nerve gas against enemy personnel. When the bomb is released from the delivery aircraft, fuze and tail arming wires are extracted. This frees fuze arming vanes to rotate in the airstream, arming the fuze, and releases the tail fins to the open position, providing aerodynamic stability to the bomb in its free-fall trajectory. The fuze detonates the bomb burster charge on impact with the target. The burster charge detonation splits the bomb body and disperses the chemical agent in the form of vapor and an aerosol cloud over the area.

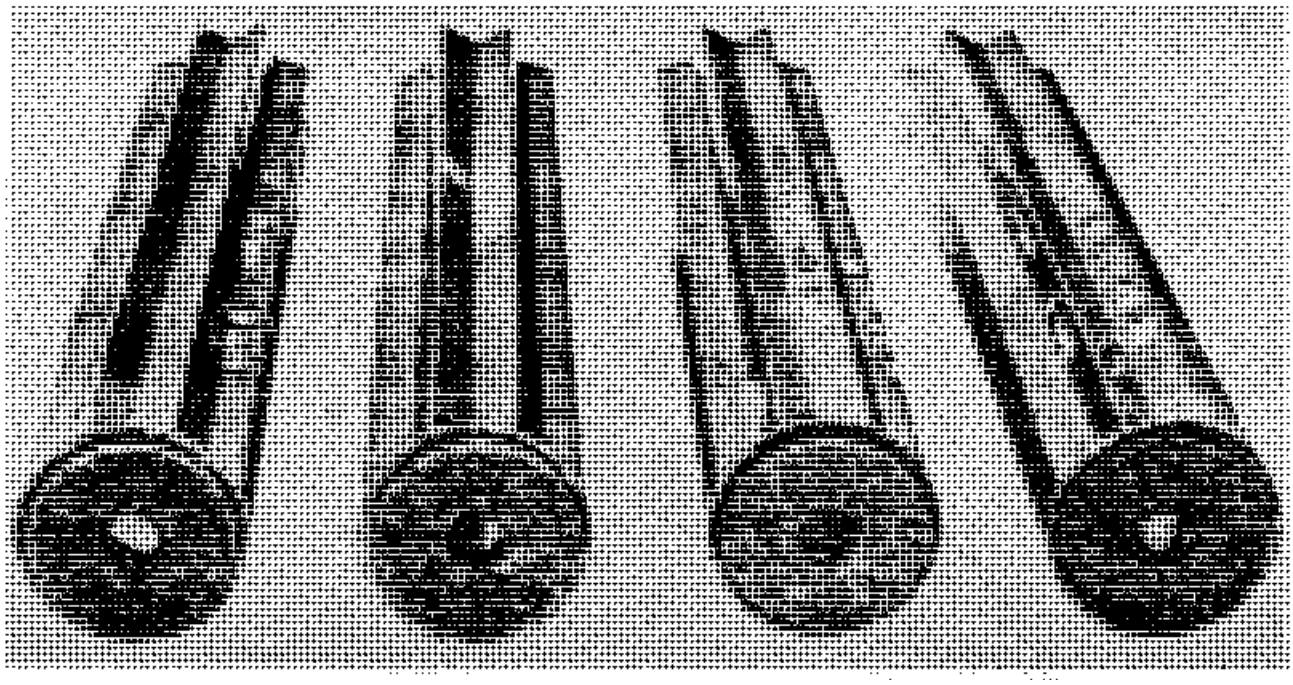

Figure 2-2. Bomb bursters

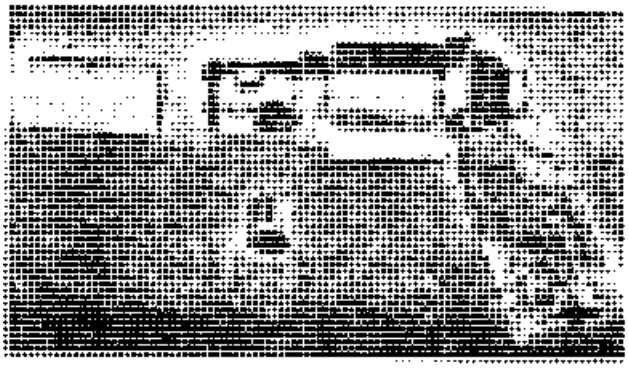

Figure 2-3. Mechanical fuze M904E2

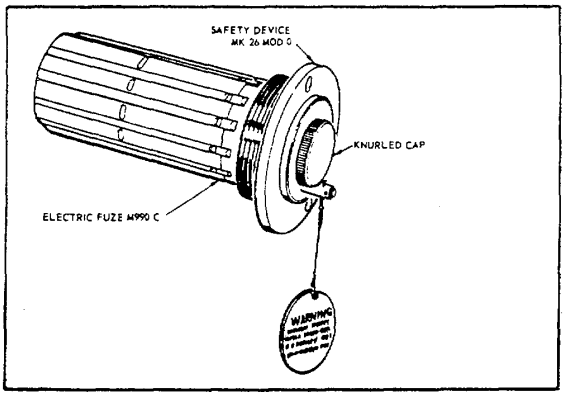

Figure 2-4. Assembled electric fuze M990D

SECTION III
SUPPORT EQUIPMENT AND SPECIAL TOOLS

3-1. Hand Tools. Hand tools necessary to handle the bomb must be on hand before the bomb container is opened. Table I lists the hand tools required.

3-2. Handling Equipment. Handling equipment for moving the bomb in and out of its container is listed in table II.

3-3. Special Safety Items. Protective clothing, masks or oxygen-breathing apparatus are required when handling the bomb, when inspecting it, and when an emergency exists.

3-4. Containers. *a. Container for Bomb*. The chemical bomb is shipped and stored in the *Shipping and Storage Container Mk 398 MOD O*, figure 3-1. The chemical bomb in its container is assembled except for fuze, bomb bursters, and suspension lugs. The fuzes and bursters are packaged separately. The suspension lugs are packed with the chemical bomb. The container is resealable and reusable. It consists of two halves. Bomb retaining straps are in the bottom half of the container. Removable packing and cushioning materials are in each end of the container. A sampling port for leak detection is in each end of the container upper half. Twenty overcenter latches join and seal the container halves. Forklift guides and lifting eyes are on the bottom container half.

b. *Container for Bomb Bursters*. The bomb bursters are shipped and stored in the Shipping and Storage Container Mk 417 MOD O, figure 3-2. The reusable container is gasket sealed and opens at the end. The eight bursters are supported in dunnage of rubberized hair cushion.

Table I. Hand Tools

Tool	Use
3/4-inch open-end wrench	To remove and replace detection plug from bomb container test connection.
3/s-inch screwdriver	To remove bomb nose cap from stored position in bottom of bomb container and to separate top and bottom halves of container.
9/16-inch deep-socket and ratchet drive	To release tension on bomb retaining straps in bomb container and, during repack, to tighten and torque retaining strap bolts.
9/16-inch open-end wrench.	In lieu of 9/16-inch socket to loosen and tighten bomb retaining straps.
Torque Wrench, 150-Inch-Pound	With 9/16-inch or 1/2-inch socket to torque retaining strap bolts or container latch nuts.
/2-inch socket	With torque wrench to torque container latch nuts.

Table II. Handling Equipment

Tool	Use
Forklift, 4,000-pound capacity containers.	To handle bombs in
Hoisting bar, 1,000-pound capacity, for 14-inch suspension lug	To attach bomb to chain hoist when removing bomb from container.
Hoisting bridle, 1,000-pound capacity, 4-hook, 30-inches long	To hoist bomb in container.
Trailer Aero 51A (with suitable towing vehicle)	To move bomb in container.
Trailer, Rough Terrain, A/M 32K-4	With Rough Terrain Forklift RFD-60, to move bomb in container.
Stacking Frame, Small, Universal Cradle, MHU-64/E	With Rough Terrain Trailer A/M 32K-4.
Forklift, Rough Terrain, 6,000 pound capacity, RFK-60	To move bombs in containers over rough terrain.
Crane, Rough Terrain, M-60.	To handle bombs during transfer in or out of containers.
Hook Adapter Aero 85A	With forklifts to provide hooklifting capability.

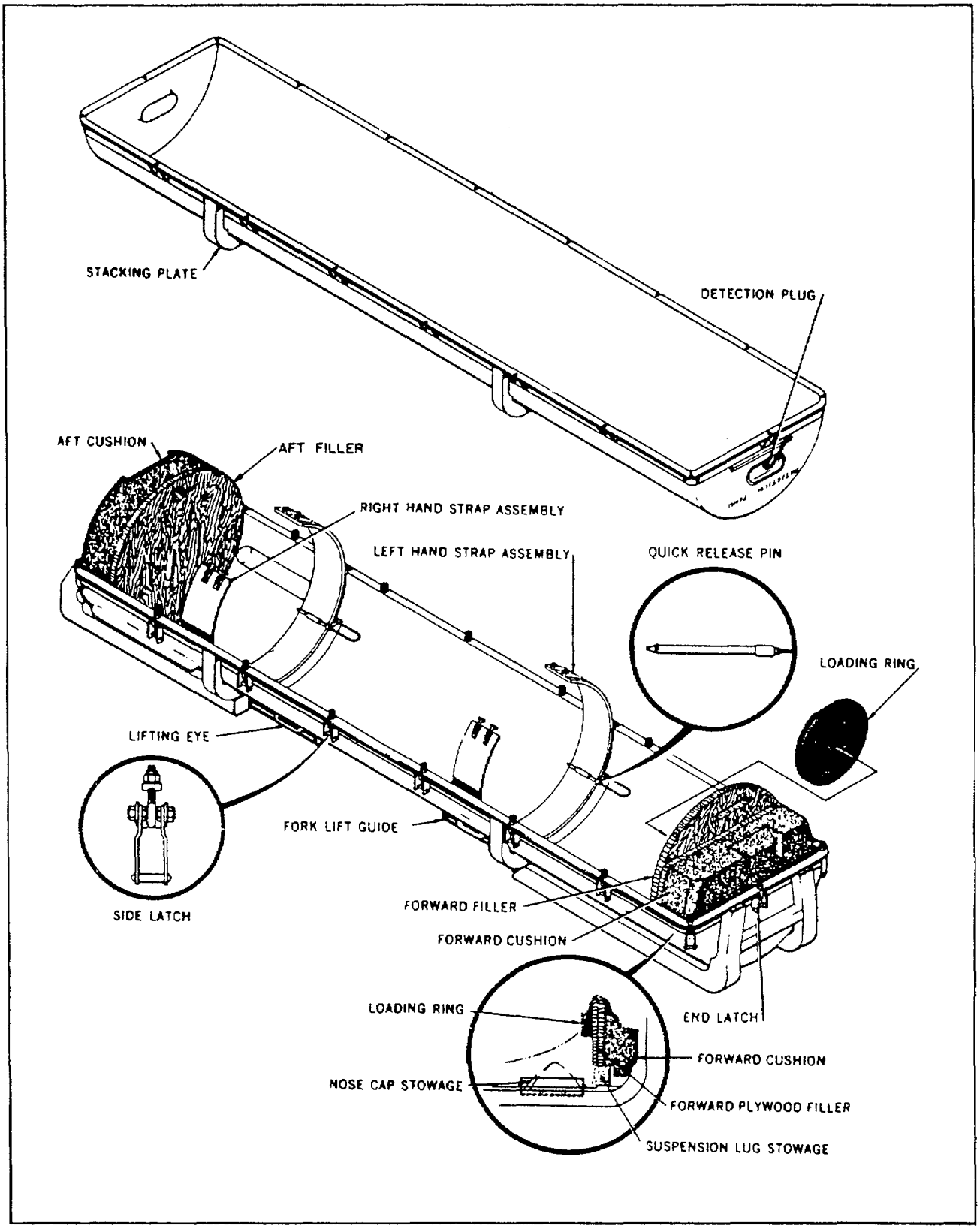

Figure 3-1. Shipping and storage container Mk 398MOD O.

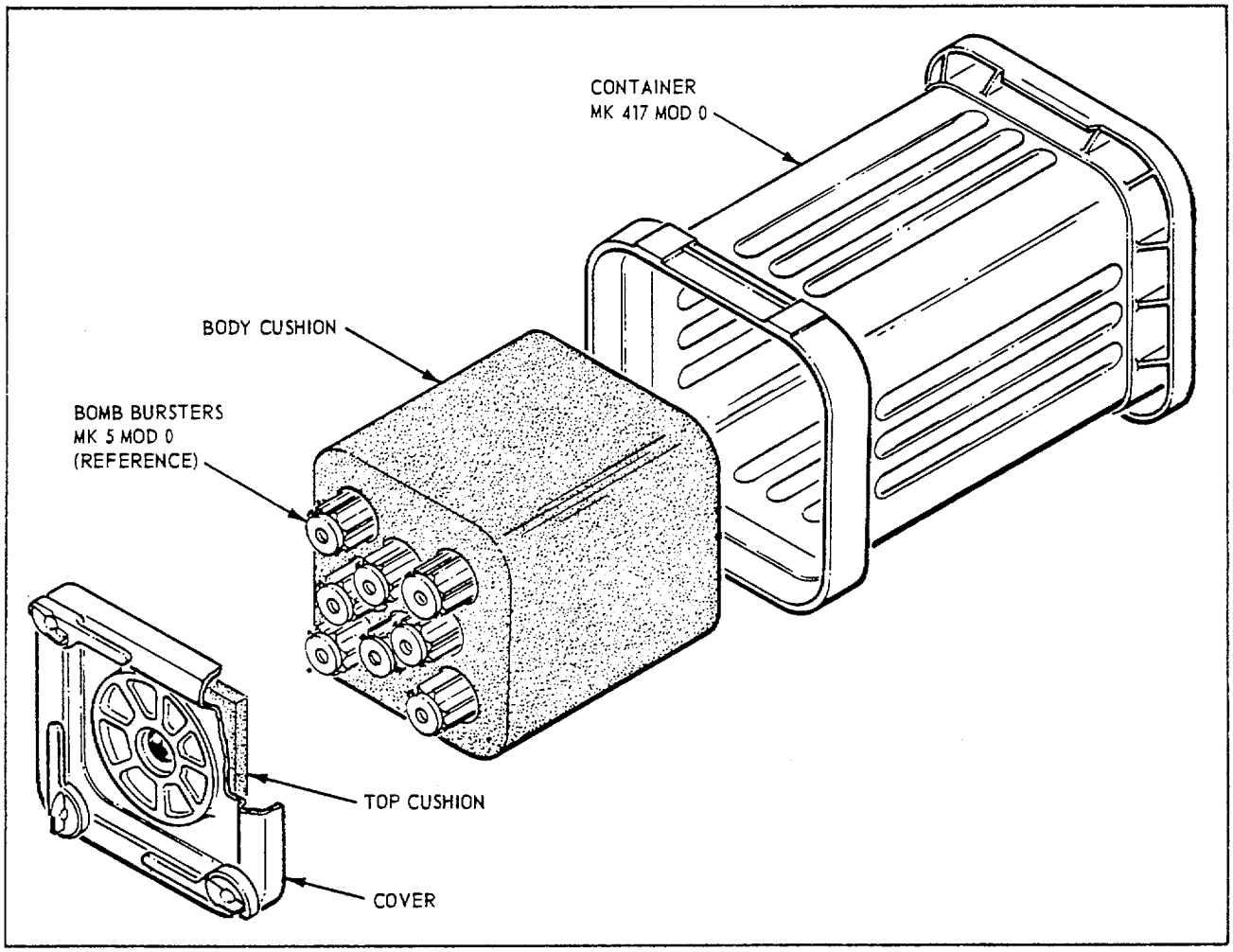

Figure 3-2. Shipping and storage container Mk 417MOD O.

SECTION IV

SAFETY AND INSPECTION

4-1. Hazard. Although the Chemical Bomb MK 116 MOD O and its container are designed to be leakproof and durable, neither is puncture proof, and the chemical agent GB in the bomb is hazardous to personnel.

4-2. General. a. *Safety*. During testing and handling of chemical material, inspection personnel shall observe the safety precautions prescribed in FM 3-9, TM 3-220, TM 3-250, TM 743-200, TM 743200-1, TM 9-1300-206, and approved standing operating procedures.

NOTE

STACKED CHEMICAL BOMBS IN CONTAINERS NOT TO EXCEED THREE UNITS HIGH.

b. TM 8-285, Treatment of Chemical Agent Casualties and Conventional Military Chemical Injuries, describes signs and symptoms of nerve agent poisoning, principles of self aid and treatment of chemical agent casualties.
c. TM 10-277, Protective Clothing-Chemical Operations, describes the various items of protective clothing and accessories and provides instructions for their use, fitting, wear, and decontamination in chemical operations.
d. FM 3-21, Chemical Accident Contamination Control, provides guidance for training, equipping and utilizing teams for contamination control.
e. TM 3-220, Chemical, Biological, and Radiological (CBR) Decontamination, contains information about decontaminants, decontaminating equipment, and decontamination methods.
f. AR 50-6, Chemical Surety Program, includes the suitability and reliability requirements for personnel assigned to toxic operations.
g. Inspections are required to determine serviceability and agent leakage from the bomb/container.

4-3. Types Of Inspections. Assembled GB filled chemical bombs in their shipping and storage containers will be subjected to the following inspections as required; receipt, initial receipt, pre-issue, during unpacking, periodic, storage monitoring and special.

4-4. Initial Receipt And Receipt Inspections. Each bomb in its container shall be inspected, both at the shipping point by the releasing activity and at the receiving point by the receiving activity. Equipment and materials required for this inspection are as follows:
a. Chemical Bomb Mk 116 MOD O in Shipping and Storage Container Mk 398 MOD O.
b. Aspirator Bulb NSN 6640-00-630-7965 or APE 2053 series, Air Sampling Device.
c. Open-end wrench, 3/4-inch.
d. Protective Mask M17 or M9A1.
e. Protective clothing, Level B.
f. Trailer Aero 51A (with appropriate towing vehicle).
g. Crane, chain hoist, or other suitable lifting equipment.
h. Suspension lug hoisting bar, 14-inch.
i. Four-hook hoisting bridle.
j. Torque wrench, 0-50-inch-pound capacity, 1/2inch drive.
k. Deep socket wrench, 9/16-inch, and ratchet drive.
l. Socket wrench, 1/2-inch.
m. Open-end wrench, 9/16-inch.
n. White band tubes, NSN 6665-00-702-7136 or Blue Band Tubes, NSN 6665-00-856-8236.
o. Adapter.
p. Indole. Analyzed reagent (obtain from any local chemical supply company) (minimum 99 percent purity).
q. Sodium Pyrophosphate Peroxide, NSN 681000-034-1319.

WARNING

When a suspect leaker is detected, an alarm will be sounded and all personnel, not in Level A, will mask and evacuate. Except for leaker removal, containerization, and decontamination activities, re-entry into the area will not be permitted until appropriate corrective actions have been accomplished and the area has been declared free of exposed agent.

4-5. Inspection of Chemical Bomb. Inspection of the chemical bomb for agent leakage is as follows:
a. Remove detection plug from sampling port on one end of container using 3/4-inch open-end wrench.

Insert probe (quarter inch steel tubing) to assure

styrofoam packing has not blocked air flow. Repeat this procedure on opposite end of container. Connect threaded fitting with short length of stainless steel tubing and short length of tygon tubing to sample port of shipping container. Insert white or blue band tube between tygon tubing on shipping container adapter and sample line from APE air sampling device or aspirator bulb (insure sampling port on opposite end of shipping container is open prior to making this connection). Test for GB vapor IAW SB 742-1.

b. At completion of the agent vapor test, replace detection plugs, torque 5 to 7 inch-pounds. If leakage was confirmed, place in isolated storage and report IAW para 4-12.

c. Inspect chemical bomb container visually for damage. If container is damaged to the extent that it may not constrain GB vapors should bomb leak, replace container as follows:

(1) Using crane, chain hoist, or other suitable lifting equipment, and 4-hook hoisting bridle, load chemical bomb in container on bomb trailer.

(2) Unpack chemical bomb, using procedures given in paragraph 6-3.

(3) Pack chemical bomb in new container, using procedures in paragraph 6-4.

(4) Using suitable lifting equipment and hoisting bridle, remove chemical bomb in container from bomb trailer and return it to its original location.

(5) Decontaminate and dispose of damaged container in accordance with instructions.

4-6. Periodic Inspection. a. Inspection will be performed IAW the visual and test procedures in SB 742-1. The interval will be yearly (12 months) from the date of last inspection. If deemed necessary by the Quality Assurance Specialist (Ammo Survl) (QASAS) in charge, inspection may be performed at lesser or greater intervals, but interval is not to be exceed 15 months.

b. A sample of 20 units will be selected from total stock in proportion to lot size. These samples, after test with white/blue band tubes, shall be monitored with bubblers or concentrators and, if results are negative, opened. Visual inspection for leakage/ evidence of leakage, defects as described in SB 742-1, and any other nonstandard conditions, will be performed. The outer pack of these samples will be marked "Item Visual Insp (Date)." No previously opened sample will be reopened for item visual inspection until all containers have been opened, thereby starting a new cycle.

4-7. Storage Monitoring (SMI). a. Agent leakage tests will be performed IAW SB 742-1. Quarterly (3 months) inspection are from data of last inspection. If deemed necessary by the Quality Assurance Specialist (Ammo Survl) (QASAS) in charge, inspection may be performed at lesser or greater intervals, but interval is not to exceed 115 days. Letters indicating accomplishment shall be submitted quarterly to Commander, US Army Armament Materiel Readiness Command, ATTN: DRSAR-QAS-N, Rock Island, IL 61299.

b. Basis of monitoring will be as follows. Samples from each lot will have the exterior of the container inspected for visual evidence of leakage without being removed from the stack, and tested for agent leakage using blue/white band tubes so that a total of 25 percent of each lot is visually inspected and tested each quarter. These samples should be tagged/marked indicating quarterly inspection and test completed (date) to insure a 100 percent visual inspection and test yearly. In addition to the blue/ white band tube test, 20 of these samples will be monitored with bubblers or concentrators.

4-8. Preissue Inspection. Before a chemical bomb in its container is transported from one location to another, or transferred to another activity, inspect and test for GB agent leakage and for damage to the container, using applicable steps of paragraph 4-5.

Equipment and materials are the same as those listed in paragraph 4-4.

4-9. Receipt Inspection. Inspect and test for GB agent leakage and for damage to the container, using applicable steps of paragraph 4-5. Equipment and materials are the same as those listed in paragraph 4-4. The first SMI will include the inspections and test required by the Periodic Inspection and will establish the inspection cycles.

4-10. Special Inspection,. Any time that the chemical bomb, in or out of 5's container, is damaged during handling, an immediate hazard assessment is required. It must be treated as a leaker by personnel in the vicinity until proven otherwise. The equipment and materials required are the same as those listed in paragraph 4-4; procedures are the same as those of paragraph 4-5.

4-11. Tests For Leakage. *a*. Vapor and liquid tests will be performed IAW SB 742-1.

b. Items showing evidence of leakage will be isolated and reported IAW paragraph 4-12, and handled as specified in paragraph 4-13.

c. Leaking munitions will be declared unserviceable and stored IAW paragraph 4-13.

4-12. Documentation. a. When reporting data, the following forms will be used:

(1) DA Form 984 (Munitions Surveillance Report).
(2) DA Form 2415 (Ammunition Condition Report) (if applicable, see TM 38-750).
b. Reporting. Reports required by this document shall be submitted as follows:
(1) Original and one copy to Commander, US Army Armament Materiel Readiness Command, ATTN: DRSAR-QAS-N, Rock Island, IL 61299.
(2) Leakers are not reportable under the provisions contained in AR 385-40 unless there is damage to property or injury to personnel.
(3) *Critical Defect Reporting.*
(a) *Leakage or Contamination*. Reporting of leaking or contaminated munitions will be submitted in accordance with SB 742-1, appendix B.
(b) *Other Critical Defects*. When a critical defect is found, it shall be reported to the Commander, US Army Armament Materiel Readiness Command, ATTN: DRSAR-QAS-N, Rock Island, IL 61299. The report shall be by telephone or teletype stating the nomenclature, the lot number of the item involved and the defect encountered.

4-13. Special Instructions. *a*. Comments regarding errors or omissions will be forwarded on DA Form 2028 to Commander, US Army Armament Materiel Readiness Command, ATTN: DRSAR-QAS-N, Rock Island, IL 61299.
b. Reports prepared in accordance with this bulletin may contain classified information in accordance with AR 380-86 and AR 380-5. Compilation of SB 742-1325-94-20 reports may require a higher degree of classification.
c. Safety rules pertaining to the handling of munitions containing high explosives shall be followed where applicable. A leaking bomb shall not be removed from the container, but shall be placed in isolation to await disposal.
d. APE 2053 series air sampling device. The canister will be discarded and the device will be checked for contamination prior to removal from the area in which the leaker was found. If necessary, the device will be decontaminated. Dispose of contaminated canisters by chemical decontamination or other approved methods and other contaminated test material will be chemically decontaminated and disposed of by an approved method.
e. Prior to an inspection, operation or test, all measuring devices that require calibration will be inspected to verify that the calibration interval and equipment limits have not been exceeded. (See AR 750-25.)
f. Technical assistance will be provided at the request of the depot in the event an emergency hazardous situation, an abnormal condition, questionable test results or a problem beyond local capability is encountered during surveillance operations. The technical assistance will be rendered promptly, but within normal depot working hours unless an emergency is indicated. The point of contact will be the US Army Armament Materiel Readiness Command, ATTN: DRSAR-QAS-N, Rock Island, IL 61299.

SECTION V

SPECIAL HANDLING PROCEDURES

5-1. Handling Techniques. The chemical bomb in its container is handled with cranes and hoists and on flatbed trailers and forklifts, table II. Special handling is required when the bomb is received at a facility and cannot be transported immediately to storage. At such times, maintain physical security of the bomb to deny access of unauthorized personnel to the area, thus eliminating hazards.

SECTION VI

UNPACKING AND REPACKING

6-1. Sequence of Operation. Chemical Bomb Mk 116 MOD O is received in Shipping and Storage Container Mk 398 MOD O.

6-2. Unpacking. The following equipment and materials are required to unpack the chemical bomb or to replace the container:

a. Chemical Bomb Mk 116 MOD O in Shipping and Storage Container Mk 398 MOD O.
b. Protective clothing, Level B.
c. Aspirator Bulb NSN 6640-00-636-7965 or APE 2053 series, Air Sampling Device.
d. Open-end wrench, 3/4-inch.
e. Four-hook hoisting bridle.
f. Aero 51A trailer.
g. Suspension lug hoisting bar, 14-inch.
h. Crane or other suitable lifting equipment.
i. White band tubes, NSN 6665-00-702-7136 or blue band tubes, NSN 6665-00-856-8236.
j. Torque Wrench 1/2-inch drive, 0-150 inch-pounds.
k. Indole. Analyzed reagent (obtain from any local chemical supply company) (minimum 99% purity).
1. Sodium Pyrophosphate Peroxide, NSN 6810-00-034-1319.
m. Air pressure gage.
n. Compressed air source.

6-3. Unpack Chemical Bomb. Unpack chemical bomb as follows:

WARNING

For safety and security reasons, work on Chemical Bomb Mk 116 MOD O shall be performed with a crew of at least two men. Handling crews shall not leave the unpacked bomb unattended for any reasons, except as directed by authorized personnel in case of an emergency. During inspection of the bomb, all personnel in the area shall wear Level B protective clothing at a minimum.

WARNING

When a suspect leaker is detected, an alarm will be sounded and all personnel, not in Level A, will mask and evacuate. Except for leaker removal, containerization, and decontamination activities, re-entry into the area will not be permitted until appropriate corrective actions have been accomplished and the area has been declared free of exposed agent.

a. Inspect and test the chemical bomb for agent leakage and inspect container visually for damage, as directed in paragraph 4-5.

CAUTION

When unpacking the bomb, do not loosen nuts on upper ends of side latches and end latches. These nuts are torqued when the bomb is packed and, if loosened, must be retorqued when the bomb is repacked.

b. Release all side latches and end latches and remove top half of container.

WARNING

If inspection reveals the presence of GB agent when top half of container is removed, an emergency exists.

c. Visually inspect bomb for damage or leakage.
d. If no damage or GB leakage is evident, proceed to step e below. If damage or presence of GB is detected and confirmed, replace top half of bomb container, secure all side and end latches, and comply with instructions in paragraph 4-11.
e. Release right and left-hand strap assemblies by loosening bolts at top of each strap assembly and pulling quick release pins from side of each strap assembly, figure 3-1.
f. Remove forward filler and loading ring from container.
g. Remove aft cushion from container.
h. Remove suspension lugs from stored position in bottom of container and install lugs in forward and aft suspension lug holes.

CAUTION

Provide sufficient clearance around bomb to prevent contact between bomb and other objects or surfaces and to permit operation of tail assembly.

i. Using a crane or other suitable lifting equip-

ment and 14-inch suspension lug hoisting bar, lift bomb from container.

j. Repeat steps c and d.

k. Place bomb in bottom half of new container, (see para 6-4).

l. Place loading ring, forward filler and aft cushion in unserviceable container for future use.

6-4. Repacking. Chemical Bomb Mk 116 Mod 0 shall be packed and sealed in Shipping and Storage Container Mk 398 Mod 0 for any movement after replacement of damaged container or for return to storage.

a. Place bottom half of container on Trailer Aero 51A.

b. Remove rubber loading ring, plywood forward filler and aft filler, and polyethylene foam forward cushion and aft cushion from container (see fig. 3-1).

c. Position loading ring on nose of bomb.

d. Make sure bomb container right and left-hand strap assemblies are fully open to allow sufficient clearance for bomb to be lowered into container. If strap assemblies have been removed, make sure that quick-release pins are hanging outside container so they will be readily accessible.

e. Hold aft cushion in place in container. Using a crane and 14-inch suspension lug hoisting bar or other suitable lifting equipment, carefully lower bomb into container. Make sure that bomb is firmly seated against aft cushion.

f. Remove hoisting bar. Remove suspension lugs from suspension beam, and store lugs in suspension lug storage retainer assembly in bottom of bomb container.

g. With loading ring properly positioned on bomb nose, insert forward cushion into container.

h. Insert plywood forward filler into container between forward cushion and loading ring. Hold loading ring in place to avoid displacing it.

i. Close and secure each bomb container strap assembly as follows:

(1) Install and close each strap assembly. Install quick-release pin.

(2) Torque each strap bolt to 50 inch-pounds.

(3) Retorque each strap bolt to 75 inch-pounds.

(4) Retorque each strap bolt to 100 inch-pounds.

(5) Retorque each strap bolt to 100 ±5 inch-pounds.

j. Position top half of container over bomb. After making sure that top half is positioned properly, close container side latches and end latches as follows:

(1) Close center end latches.

(2) Close two each side latches nearest each end latch.

(3) Close remaining latches.

k. Inspect 9/16-inch latch nuts and 1/2-inch jam nuts on each latch. If any latch nut or jam nut is loose, retorque all latch nuts to 75 ±5 inch-pounds and retorque all jam nuts to 110 ±10 inch-pounds as follows:

(1) Remove jam nut from latch.

(2) Back off latch nut one turn.

(3) torque latch nut to 50 inch-pounds.

(4) Retorque latch nut to 75 inch-pounds.

(5) Remove torque wrench from 9/16-inch retaining nut, hold nut with 9/16-inch open-end wrench, install and tighten 1/2-inch jam nut, and torque jam nut to 110 ±10 inch-pounds.

(6) Pressurize container to 15 PSIG. A pressure drop in excess of one and one-half pound after 3 minutes will reject the container. Vent pressure in container to atmospheric. The bomb, in a serviceable container, is now ready for transporting to storage.

APPENDIX A

SUPPLEMENTAL PUBLICATIONS

DARCOMR 385-100	AMC Safety Manual
DARCOMR 385-102	Safety Regulations for Chemical Agents GB and VX

By Order of the Secretary of the Arn.: :

E. C. MEYER
General, United States Army
Chief of Staff

Official:

J. C. PENNINGTON
Major General, United States Army
The Adjutant General

Distribution:
To be distributed in accordance with list furnished.

☺U.S. GOVERNMENT PRINTING OFFICE: 1994 - 300-421/82221

TEAR ALONG PERFORATED LINE

RECOMMENDED CHANGES TO EQUIPMENT TECHNICAL PUBLICATIONS

SOMETHING WRONG WITH THIS PUBLICATION?

FROM: (PRINT YOUR UNIT'S COMPLETE ADDRESS)

DATE SENT

PUBLICATION NUMBER	PUBLICATION DATE	PUBLICATION TITLE

BE EXACT. . .PIN-POINT WHERE IT IS

PAGE NO.	PARA-GRAPH	FIGURE NO	TABLE NO.

IN THIS SPACE TELL WHAT IS WRONG AND WHAT SHOULD BE DONE ABOUT IT:

PRINTED NAME, GRADE OR TITLE, AND TELEPHONE NUMBER

SIGN HERE:

DA FORM 1 JUL 79 2028-2

PREVIOUS EDITIONS ARE OBSOLETE.

P.S.—IF YOUR OUTFIT WANTS TO KNOW ABOUT YOUR RECOMMENDATION MAKE A CARBON COPY OF THIS AND GIVE IT TO YOUR HEADQUARTERS.

THE METRIC SYSTEM AND EQUIVALENTS

LINEAR MEASURE

1 Centimeter 10 Millimeters 0 01 Meters 0 3937 Inches
1 Meter 100 Centimeters 1000 Millimeters 39 37 Inches
1 Kilometer 1000 Meters 0 621 Miles

WEIGHTS

1 Gram 0 001 Kilograms 1000 Milligrams 0 035 Ounces
1 Kilogram 1000 Grams 2 2 Lb
1 Metric Ton 1000 Kilograms 1 Megagram 1 1 Short Tons

LIQUID MEASURE

1 Milliliter 0 001 Liters 0 0338 Fluid Ounces
1 Liter 1000 Milliliters 33 82 Fluid Ounces

SQUARE MEASURE

1 Sq Centimeter 100 Sq Millimeters
1 Sq Meter 10,000 Sq Centimeters
1 Sq Kilometer 1,000,000 Sq Meter

CUBIC MEASURE

1 Cu Centimeter 1000 Cu Millimete
1 Cu Meter 1,000,000 Cu Centimet

TEMPERATURE

5/9 (F 32) C
212 Fahrenheit is equivalent to 100 (
90 Fahrenheit is equivalent to 32 2
32 Fahrenheit is equivalent to 0 Ce
9/5 C + 32 F

APPROXIMATE CONVERSION FACTORS

TO CHANGE	TO	MULTIPLY BY
Inches	Centimeters	2 540
Feet	Meters	0 305
Yards	Meters	0 914
Miles	Kilometers	1 609
Square Inches	Square Centimeters	6 451
Square Feet	Square Meters	0 093
Square Yards	Square Meters	0 836
Square Miles	Square Kilometers	2.590
Acres	Square Hectometers	0 405
Cubic Feet	Cubic Meters	0.028
Cubic Yards	Cubic Meters	0.765
Fluid Ounces	Milliliters	29 573
Pints	Liters	0.473
Quarts	Liters	0.946
Gallons	Liters	3.785
Ounces	Grams	28.349
Pounds	Kilograms	0.454
Short Tons	Metric Tons	0 907
Pound-Feet	Newton-Meters	1.356
Pounds per Square Inch	Kilopascals	6.895
Miles per Gallon	Kilometers per Liter	0.425
Miles per Hour	Kilometers per Hour	1.609

TO CHANGE	TO	MULTIPLY BY
Centimeters	Inches	0.394
Meters	Feet	3.280
Meters	Yards	1.094
Kilometers	Miles	0.621
Square Centimeters	Square Inches	0.155
Square Meters	Square Feet	10.764
Square Meters	Square Yards	1.196

SB 742-1325-94-20 CHEMICAL BOMB MARK-DECEMBER 1979

PIN: 044823-000