* TM 55-1520-228-23-1

TECHNICAL MANUAL
AVIATION UNIT AND INTERMEDIATE MAINTENANCE MANUAL

ARMY MODEL
OH-58A AND OH-58C HELICOPTERS

(NSN 1520-00-169-7137) (EIC: ROA)
(NSN 1520-01-020-4216) (EIC: ROB)

DISTRIBUTION STATEMENT A: Approved for public release; distribution is unlimited.

*** This manual supersedes TM 55-1520-228-23-1 dated 4 August 1978, including all changes.**

HEADQUARTERS, DEPARTMENT OF THE ARMY

28 FEBRUARY 1989

WARNING

CRITICAL SAFETY ITEM (CSI)

This manual contains procedures identifying critical characteristics of CSI. Critical characteristics may be identi.ed as dimensions, tolerances, finishes, materials, assembly, or inspection procedures. Some processes may require qualified sources. CSI indicating a maximum allowable limit shall not be continued in use when limits have been exceeded. These parts must be replaced.

WARNING

Personnel performing operations, procedures, and practices which are included or implied in this technical manual shall observe the following instructions. Disregard of these warnings and precautionary information can cause serious injury, death, or an aborted mission.

WARNING

TOXIC POISONS DANGEROUS CHEMICALS ARE USED IN NICKEL-CADMIUM BATTERIES

The electrolyte used in nickel-cadmium batteries contains potassium hydroxide (KOH), which is a caustic chemical agent. Serious and deep burns of body tissue will result if the electrolyte comes in contact with the eyes or any part of the body. Use rubber gloves, rubber apron, and protective eye covering when handling the battery. If accidental contact with the electrolyte is made, use ONLY clean water and immediately (seconds count) flush contaminated areas. Continue flushing with large quantities of clean water. Seek medical attention immediately. Before removing or installing the battery, ensure that the battery switch is off and the battery has cooled down if overheated. Removal or installation of the battery connector while the battery is under load may result in explosion, electrical arcing, and possible severe burns to personnel. Take every possible step to keep the nickel-cadmium battery as far away as possible from the lead-acid type of battery. Do not use the same tools and materials (screwdrivers, wrenches, gloves, apron, etc.) for both types of batteries. Anything associated with the lead-acid battery, even the air, must never come in contact with the nickel-cadmium battery or its electrolyte. Even a trace of sulfuric acid fumes from a lead-acid battery may result in damage to the nickel-cadmium battery. If sulfuric acid has been inadvertently mixed with the electrolyte in the battery, the upper areas of the cells will appear greenish in color. In such cases, the battery must be replaced.

Turbine fuels and lubricating oils contain additives which are poisonous and readily absorbed through the skin. Do not allow them to remain on skin longer than necessary.

WARNING

HANDLING HYDRAULIC FLUID

Prolonged contact with liquid or mist can irritate eyes and skin. After any prolonged contact with skin, immediately wash contact area with soap and water. If liquid contacts eyes, flush immediately with clear water. If liquid is swallowed, do not induce vomiting; get immediate medical attention. Wear rubber gloves when handling liquid. If prolonged contact with mist is likely, wear an appropriate respirator. When fluid is decomposed by heating, toxic gases are released.

WARNING

NOISE

Sound pressure levels in this helicopter during some operation conditions exceed the Surgeon General hearing conservation criteria, as defined in TB MED-501. Hearing protection devices, such as aviator helmets or ear plugs are required to be worn by all personnel in and around the helicopter during operation.

WARNING

GROUND OPERATION

Engine will be started and operated only by authorized personnel. Reference AR 95-1.

WARNING

FIRE EXTINGUISHER

Exposure to high concentrations of monobromotrifluoromethane (CF3BR) extinguishing agent or decomposition products should be avoided. The liquid should not be allowed to come into contact with the skin, as it may cause frost bite or low temperature burns.

When helicopter is to be parked where ambient temperature equals or exceeds 90°F (32°C), the fire extinguisher shall be removed until the next mission.

WARNING

ARMAMENT

Loaded weapons, or weapons being loaded or unloaded, shall be pointed in a direction which offers the least exposure to personnel or property in the event of accidental firing. Personnel should remain clear of hazardous area of all loaded weapons.

ANY ROTATION OF THE GUN ARMAMENT SUBSYSTEM BARRELS WILL CAUSE THE GUN TO FIRE. Upon landing, immediately alert personnel to probable presence of live rounds in the gun. Summon armament repairman to clear weapon.

WARNING

FUELING AND DEFUELING

When refueling helicopter, the refueling vehicle or forward air refueling unit must be parked a minimum of 20 feet from the helicopter. Before starting the fueling operation, always insert fueling nozzle grounding chain of fuel truck ground wire into GROUND HERE receptacle located on the right side of the helicopter aft of the cabin area.

When defueling, turn off all electrical switches and disconnect external power from the helicopter. The helicopter must be electrically grounded prior to defueling.

WARNING

RADIOACTIVE MATERIALS

Self-luminous dials and ignition units may contain radioactive materials. If such an instrument or unit is broken or becomes unsealed, avoid personal contact. Use forceps or gloves made of rubber or polyethylene to pick up contaminated material. Place materials and gloves in a plastic bag. Seal bag and dispose of it as radioactive waste in accordance with AR 755-15 and TM 3-261 (Refer to TB 55-1500-314-25). Repair procedures shall conform to requirements in AR 700-52.

WARNING

EXPLOSIVES

The missile round contains explosives. All applicable safety regulations shall be strictly enforced. Explosive components containing electrical wiring must be protected at all times from stray voltages or induced electrical currents.

Handling operations should not be performed during electrical storms.

WARNING

TOXIC MATERIALS

The basic stinger missile round and captive flight trainer (CFT) contain mercury thallium. If the IR dome should break, do not touch the basic stinger missile round or CFT in the vicinity of the IR dome. This material is toxic to unprotected skin. Avoid all contact with the released material unless protective equipment is being worn, such as a respirator, gloves, and chemical goggles. If the skin or eyes are exposed to the spilled material, immediately flush with large quantities of water. Any person exposed to the released material should be promptly referred to a physician.

WARNING

CORROSION

During any inspection of the aircraft or components, the person making the inspection should pay particular attention to areas prone to corrosion. When corrosion is found, a prime consideration is to evaluate what corrective action will be required to correct the discrepancy. Corrosion repair and treatment can be time consuming, and for this reason, early evaluation is essential for good aircraft maintenance planning. This evaluation will assist in determining if sheet metal or aircraft mechanics will be necessary to make the needed repair. In cases where corrosion has exceeded the accept or reject criteria, material replacement will be necessary. For material replacement, refer to TM 1-1500-204-23 General Aircraft Maintenance Manual. For corrosion treatment, refer to TM 43-0105, Corrosion Control for Army Aircraft; and for painting, refer to TM 55-1500-345-23, Painting and Marking of Army Aircraft. If corrosion is found and not covered by applicable TM's submit a DA Form 2028, Recommended Changes to Equipment Technical Publications, or an Equipment Improvement Recommendation (EIR) where a design change is necessary.

WARNING

ACETONE, ASTM D329

Acetone is extremely flammable and toxic to eyes, skin, and respiratory tract. Wear protective gloves and goggles/face shield. Avoid repeated or prolonged contact. Use only in well-ventilated areas (or use approved respirator as determined by local safety/industrial hygiene personnel). Keep away from open flames, sparks, hot surfaces or other sources of ignition.

WARNING

DEGREASING SOLVENT, MIL-PRF-680

Degreasing Solvent is combustible and toxic to eyes, skin, and respiratory tract. Wear protective gloves and goggles/face shield. Avoid repeated or prolonged contact. Use only in well-ventilated areas (or use approved respirator as determined by local safety/industrial hygiene personnel). Keep away from open flames or other sources of ignition.

WARNING

ISOPROPYL ALCOHOL, TT-I-735

Isopropyl alcohol is flammable and toxic to eyes, skin, and respiratory tract. Wear protective gloves and goggles/face shield. Avoid repeated or prolonged contact. Use only in well-ventilated areas (or use approved respirator as determined by local safety/industrial hygiene personnel). Keep away from open flames, sparks or other sources of ignition.

WARNING

ALIPHATIC NAPHTHA, TT-N-95

Aliphatic Naphtha is flammable and toxic to eyes, skin, and respiratory tract. Wear protective gloves and goggles/face shield. Avoid repeated or prolonged contact. Use only in well-ventilated areas (or use approved respirator as determined by local safety/industrial hygiene personnel). Keep away from open flames, sparks or other sources of ignition.

WARNING

ASBETOS FIBERS

Breathing asbestos fibers/dust can cause cancer and lung disease. Consult local industrial hygiene/safety representatives for specific asbestos operating procedures. Do not work with asbestos materials unless assigned protective equipment is worn. Avoid any work practice that will create dust. Use proper wetting procedures to keep dusting to a minimum.

CHANGE

NO. 36

HEADQUARTERS
DEPARTMENT OF THE ARMY
WASHINGTON, D.C., 28 June 2010

AVIATION UNIT AND INTERMEDIATE MAINTENANCE MANUAL ARMY MODEL OH-58A AND OH-58C HELICOPTERS

(NSN 1520-00-169-7137/1520-01-020-4216) (EIC: ROA/ROB)

DISTRIBUTION STATEMENT A: Approved for public release; distribution is unlimited.

TM 55-1520-228-23-1, dated 28 February 1989, is changed as follows:

1. Remove and insert pages as indicated below. New or changed text material is indicated by a vertical bar in the margin. An illustration change is indicated by a miniature pointing hand.

Remove Pages	Insert Pages
a and b	a and b
A thru K/(L blank)	A thru J
i and iii/(iv blank)	i and ii
P-1 and P-2	P-1 and P-2
1-1 and 1-2	1-1 and 1-2
1-7 through 1-10	1-7 through 1-10
1-11 thru 1-20	1-11 thru 1-20
1-20.1/(1-20.2 blank)	1-20.1/(1-20.2 blank)
1-23 and 1-24	1-23 and 1-24
1-35 and 1-36	1-35 and 1-36
1-41 and 1-42	1-41 and 1-42
1-47 through 1-52	1-47 through 1-52
1-52.1/(1-52.2 blank)	1-52.1/(1-52.2 blank)
1-53 through 1-56	1-53 through 1-56
— — —	1-56.1(1-56.2 blank)
1-57 and 1-58	1-57 and 1-58
— — —	1-58.1 and 1-58.2
1-59 through 1-62	1-59 through 1-62
1-62.1 and 1-62.2	1-62.1 and 1-62.2
1-65 and 1-66	1-65 and 1-66
1-66.1 through 1-66.3(1-66.4 blank)	1-66.1 through 1-66.3(1-66.4 blank)
1-67 and 1-68	1-67 and 1-68
2-1 and 2-2	2-1 and 2-2
2-5 and 2-6	2-5 and 2-6
2-6.1 and 2-6.2	(2-6.1 blank)/2-6.2
2-27 and 2-28	2-27 and 2-28
2-28.1/(2-28.2 blank)	2-28.1/(2-28.2 blank)
2-59 through 2-62	2-59 through 2-62
2-67 and 2-68	2-67 and 2-68
2-73 through 2-78	2-73 through 2-78
2-81 and 2-82	2-81 and 2-82
2-87 and 2-88	2-87 and 2-88
2-107 and 2-108	2-107 and 2-108
2-109 and 2-110	2-109 and 2-110
3-1 and 3-2	3-1 and 3-2
3-25 and 3-26	3-25 and 3-26
4-1 and 4-2	4-1 and 4-2

Remove Pages	Insert Pages
4-7 and 4-8	4-7 and 4-8
4-11 and 4-12	4-11 and 4-12
4-15 through 4-20	4-15 through 4-20
4-22.3 and 4-22.4	4-22.3 and 4-22.4
4-29 through 4-32	4-29 through 4-32
4-39 and 4-40	4-39 and 4-40
4-45 and 4-46	4-45 and 4-46
4-51 and 4-52	4-51 and 4-52
4-53 and 4-54	4-53 and 4-54
5-1 through 5-4	5-1 through 5-4
5-7 and 5-8	5-7 and 5-8
5-11 and 5-12	5-11 and 5-12
5-17 and 5-18	5-17 and 5-18
5-41 and 5-42	5-41 and 5-42
5-57 and 5-58	5-57 and 5-58
5-67 and 5-68	5-67 and 5-68
5-103 and 5-104	5-103 and 5-104
5-107 and 5-108	5-107 and 5-108
5-119 and 5-120	5-119 and 5-120
5-155 through 5-158	5-155 through 5-158
5-169 and 5-170	5-169 and 5-170
5-171 through 5-199/(5-200 blank)	— — —
6-5 and 6-6	6-5 and 6-6
6-11 through 6-12	6-11 through 6-12
6-13 through 6-26	6-13 through 6-26
6-39 and 6-40	6-39 and 6-40
6-57 and 6-58	6-57 and 6-58
6-97 and 6-98	6-97 and 6-98
6-103 and 6-104	6-103 and 6-104
7-11 and 7-12	7-11 and 7-12
7-23 and 7-24	7-23 and 7-24
8-15 and 8-16	8-15 and 8-16
9-25 and 9-26	9-25 and 9-26
9-53 through 9-56	9-53 through 9-56
9-57 and 9-58	9-57 and 9-58
9-63 and 9-64	9-63 and 9-64
9-107 and 9-108	9-107 and 9-108
9-108.1 through 9-108.25/(9-108.26 blank)	— — —
9-109 and 9-110	9-109 and 9-110
Index 1 through Index 52	Index 1 through Index 33/(Index 34 Blank)

2. Retain this sheet in front of manual for reference purposes.

By Order of the Secretary of the Army:

GEORGE W. CASEY, JR.
General, United States Army
Chief of Staff

Official:

JOYCE E. MORROW
Administrative Assistant to the
Secretary of the Army
1016707

Distribution:
To be distributed in accordance the initial distribution number (IDN) 310226, requirements for TM 55-1520-228-23-1.

CHANGE

NO. 35

HEADQUARTERS
DEPARTMENT OF THE ARMY
WASHINGTON, D.C., 17 November 2008

AVIATION UNIT AND INTERMEDIATE MAINTENANCE MANUAL
ARMY MODEL OH-58A AND OH-58C HELICOPTERS
NSN 1520-00-169-7137 (EIC: ROA)
NSN 1520-01-020-4216 (EIC: ROB)

DISTRIBUTION STATEMENT A: Approved for public release; distribution is unlimited.

TM 55-1520-228-23-1, dated 28 February 1989, is changed as follows:

1. Remove and insert pages as indicated below. New or changed text material is indicated by a vertical bar in the margin. An illustration change is indicated by a miniature pointing hand.

Remove Pages	Insert Pages
A through K/(L blank)	A through K/(L blank)
1-51 and 1-52	1-51 and 1-52
1-55 through 1-58	1-55 through 1-58
1-67 through 1-69/(1–70 blank)	1-67 through 1-69/(1–70 blank)
5–139 and 5–140	5–139 and 5–140
7-21 and 7-22	7–21 and 7–22

2. Retain this sheet in front of manual for reference purposes.

By Order of the Secretary of the Army:

GEORGE W. CASEY, JR.
General, United States Army
Chief of Staff

Official:

JOYCE E. MORROW
Administrative Assistant to the
Secretary of the Army
0828103

Distribution:

To be distributed in accordance with the initial distribution number (IDN) 310226, requirements for TM 55-1520-228-23-1.

CHANGE

NO. 34

HEADQUARTERS
DEPARTMENT OF THE ARMY
WASHINGTON, D.C.,1 August 2007

AVIATION UNIT AND INTERMEDIATE MAINTENANCE MANUAL ARMY MODEL OH-58A AND OH-58C HELICOPTERS

(NSN 1520-00-169-7137/1520-01-020-4216) (EIC: ROA/ROB)

DISTRIBUTION STATEMENT A: Approved for public release; distribution is unlimited.

TM 55-1520-228-23-1, dated 28 February 1989, is changed as follows:

1. Remove and insert pages as indicated below. New or changed text material is indicated by a vertical bar in the margin. An illustration change is indicated by a miniature pointing hand.

Remove Pages	Insert Pages
A through K/(L blank)	A through K/(L blank)
i and ii	i and ii
1-17 and 1-18	1-17 and 1-18
1-57 through 1-62	1-57 through 1-62
1-67 and 1-68	1-67 and 1-68
2-41 and 2-42	2-41 and 2-42
—	2-42.1/(2-42.2 blank)
2-49 and 2-50	2-49 and 2-50
2-91 and 2-92	2-91 and 2-92
2-108.1 and 2-108.2	2-108.1 and 2-108.2
2-109 and 2-110	2-109 and 2-110
2-129 and 2-130	2-129 and 2-130
4-39 and 4-40	4-39 and 4-40
4-40.1 and 4-40.2	4-40.1 and 4-40.2
5-13 through 5-16	5-13 through 5-16
5-43 through 5-46	5-43 through 5-46
5-67 and 5-68	5-67 and 5-68
—	5-68.1/(5-68.2 blank)
5-169 and 5-170	5-169 and 5-170
6-35 through 6-42	6-35 through 6-42
—	6-42.1/(6-42.2 blank)
6-57 through 6-60	6-57 through 6-60
—	6-60.1/(6-60.2 blank)
6-103 and 6-104	6-103 and 6-104
—	6-104.1/(6-104.2 blank)
7-11 and 7-12	7-11 and 7-12
7-21 and 7-22	7-21 and 7-22
—	7-22.1/(7-22.2 blank)
9-25 and 9-26	9-25 and 9-26
9-108.19 and 9-108.20	9-108.19 and 9-108.20
Cover	Cover

2. Retain this sheet in front of manual for reference purposes.

By Order of the Secretary of the Army

GEORGE W. CASEY, JR.
General, United States Army
Chief of Staff

Official:

JOYCE E. MORROW
Administrative Assistant to the
Secretary of the Army
0717904

DISTRIBUTION:
To be distributed in accordance with Initial Distribution Number (IDN) 310226 for TM 55-1520-228-23-1.

CHANGE

NO. 33

HEADQUARTERS
DEPARTMENT OF THE ARMY
WASHINGTON, D.C.,31 October 2005

AVIATION UNIT AND INTERMEDIATE MAINTENANCE MANUAL ARMY MODEL OH-58A AND OH-58C HELICOPTERS

DISTRIBUTION STATEMENT A: Approved for public release; distribution is unlimited.

TM 55-1520-228-23-1, dated 28 February 1989, is changed as follows:

1. Remove and insert pages as indicated below. New or changed text material is indicated by a vertical bar in the margin. An illustration change is indicated by a miniature pointing hand.

Remove Pages	Insert Pages
A through H	A through H
1-53 and 1-54	1-53 and 1-54
1-61 and 1-62	1-61 and 1-62
1-66.1 and 1-66.2	1-66.1 and 1-66.2
5-11 and 5-12	5-11 and 5-12
—	5-42.1/(5-42.2 blank)
—	5-124.1/(5-124.2 blank)
6-93 and 6-94	6-93 and 6-94
6-103 and 6-104	6-103 and 6-104
6-115 and 6-116	6-115 and 6-116
6-116.1/(6-116.2 blank)	6-116.1/(6-116.2 blank)
9-75 and 9-76	9-75 and 9-76

2. Retain this sheet in front of manual for reference purposes.

By Order of the Secretary of the Army:

PETER J. SCHOOMAKER
General, United States Army
Chief of Staff

OFFICIAL:

Sandra R. Riley

SANDRA R. RILEY
Administrative Assistant to the Secretary of the Army

0525104

DISTRIBUTION: To be distributed in accordance with Initial Distribution (IDN) 310226, requirements for TM 55-1520-228-23-1.

CHANGE

NO. 32

HEADQUARTERS
DEPARTMENT OF THE ARMY
WASHINGTON, D.C.,10 June 2005

AVIATION UNIT AND INTERMEDIATE MAINTENANCE MANUAL ARMY MODEL OH-58A AND OH-58C HELICOPTERS

DISTRIBUTION STATEMENT A: Approved for public release; distribution is unlimited.

TM 55-1520-228-23-1, dated 28 February 1989, is changed as follows:

1. Remove and insert pages as indicated below. New or changed text material is indicated by a vertical bar in the margin. An illustration change is indicated by a miniature pointing hand.

Remove Pages	Insert Pages
a through c/(d blank)	a through d
A through G/(H blank)	A through J
P-1 and P-2	P-1 and P-2
i and ii	i and ii
—	iii/(iv blank)
1-9 and 1-10	1-9 and 1-10
1-13 through 1-20	1-13 through 1-20
1-21 and 1-22	1-21 and 1-22
1-25 and 1-26	1-25 and 1-26
1-51 and 1-52	1-51 and 1-52
1-55 and 1-56	1-55 and 1-56
1-57 through 1-60	1-57 through 1-60
1-62.1 /(1-62.2 blank)	1-62.1 and 1-62.2
1-66.1 and 1-66.2	1-66.1 and 1-66.2
2-3 and 2-4	2-3 and 2-4
2-13 through 2-16	2-13 through 2-16
2-19 and 2-20	2-19 and 2-20
2-31 and 2-32	2-31 and 2-32
2-41 and 2-42	2-41 and 2-42
2-81 and 2-82	2-81 and 2-82
2-89 through 2-92	2-89 through 2-92
—	2-92.1/(2-92.2 blank)
2-93 through 2-96	2-93 through 2-96
2-99 through 2-102	2-99 through 2-102
2-107 and 2-108	2-107 and 2-108
—	2-108.1/(2-108.2 blank)
2-113 through 2-116	2-113 through 2-116
2-119 and 2-120	2-119 and 2-120
2-131 and 2-132	2-131 and 2-132
2-137 through 2-144	2-137 through 2-144
3-11 and 3-12	3-11 and 3-12
4-5 and 4-6	4-5 and 4-6
4-7 and 4-8	4-7 and 4-8
4-11 and 4-12	4-11 and 4-12
4-19 and 4-20	4-19 and 4-20
4-22.1 through 4-22.4	4-22.1 through 4-22.4
—	4-22.5/(4-22.6 blank)
4-23 and 4-24	4-23 and 4-24
4-35 through 4-38	4-35 through 4-38
4-39 and 4-40	4-39 and 4-40

Remove Pages	Insert Pages
4-40.1 and 4-40.2	4-40.1 and 4-40.2
4-55 and 4-56	4-55 and 4-56
5-7 and 5-8	5-7 and 5-8
5-11 through 5-14	5-11 through 5-14
5-41 through 5-46	5-41 through 5-46
5-49 and 5-50	5-49 and 5-50
5-53 and 5-54	5-53 and 5-54
5-57 and 5-58	5-57 and 5-58
5-61 and 5-62	5-61 and 5-62
5-65 through 5-68	5-65 through 5-68
5-68.1/(5-68.2 blank)	5-68.1/(5-68.2 blank)
5-73 and 5-74	5-73 and 5-74
5-79 and 5-80	5-79 and 5-80
—	5-80.1/(5-80.2 blank)
5-87 and 5-88	5-87 and 5-88
5-93 and 5-94	5-93 and 5-94
5-99 and 5-100	5-99 and 5-100
5-101 and 5-102	5-101 and 5-102
5-105 and 5-106	5-105 and 5-106
5-111 and 5-112	5-111 and 5-112
5-119 and 5-120	5-119 and 5-120
5-123 and 5-124	5-123 and 5-124
5-137 and 5-138	5-137 and 5-138
5-141 through 5-144	5-141 through 5-144
5-144.1/(5-144.2 blank)	5-144.1/(5-144.2 blank)
5-151 through 5-154	5-151 through 5-154
5-157 through 5-160	5-157 through 5-160
5-167 and 5-168	5-167 and 5-168
5-169 and 5-170	5-169 and 5-170
6-19 through 6-22	6-19 through 6-22
6-31 and 6-32	6-31 and 6-32
6-37 through 6-42	6-37 through 6-42
6-45 through 6-48	6-45 through 6-48
6-55 and 6-56	6-55 and 6-56
6-59 through 6-62	6-59 through 6-62
6-71 and 6-72	6-71 and 6-72
6-83 through 6-92	6-83 through 6-92
6-95 and 6-96	6-95 and 6-96
6-103 and 6-104	6-103 and 6-104
6-109 through 6-112	6-109 through 6-112
6-115 and 6-116	6-115 and 6-116
6-119 through 6-122	6-119 through 6-122
6-127 and 6-128	6-127 and 6-128
6-128.1 and 6-128.2	6-128.1 and 6-128.2
6-129 through 6-132	6-129 through 6-132
7-7 through 7-18	7-7 through 7-18
7-21 and 7-22	7-21 and 7-22
7-27 through 7-30	7-27 through 7-30
8-5 through 8-10	8-5 through 8-10
8-13 and 8-14	8-13 and 8-14
8-25 and 8-26	8-25 and 8-26
8-47/(8-48 blank)	8-47/(8-48 blank)
9-19 and 9-20	9-19 and 9-20
9-20.1/(9-20.2 blank)	9-20.1/(9-20.2 blank)
9-25 and 9-26	9-25 and 9-26

Remove Pages	Insert Pages
9-27 and 9-28	9-27 and 9-28
9-35 and 9-36	9-35 and 9-36
—	9-36.1/(9-36.2 blank)
9-51 and 9-52	9-51 and 9-52
9-63 and 9-64	9-63 and 9-64
9-75 and 9-76	9-75 and 9-76
9-83 through 9-88	9-83 through 9-88

2. Retain this sheet in front of manual for reference purposes.

By Order of the Secretary of the Army:

PETER J. SCHOOMAKER
General, United States Army

Chief of Staff

OFFICIAL:

Sandra R. Riley

SANDRA R. RILEY
Administrative Assistant to the Secretary of the Army

0511805

DISTRIBUTION: To be distributed in accordance with Initial Distribution (IDN) 310226, requirements for TM 55-1520-228-23-1.

URGENT

CHANGE

NO. 31

HEADQUARTERS
DEPARTMENT OF THE ARMY
WASHINGTON, D.C.,2 March 2005

AVIATION UNIT AND INTERMEDIATE MAINTENANCE MANUAL ARMY MODEL OH-58A AND OH-58C HELICOPTERS

DISTRIBUTION STATEMENT A: Approved for public release; distribution is unlimited.

TM 55-1520-228-23-1, dated 28 February 1989, is changed as follows:

1. Remove and insert pages as indicated below. New or changed text material is indicated by a vertical bar in the margin. An illustration change is indicated by a miniature pointing hand.

Remove Pages	Insert Pages
1-1 and 1-2	1-1 and 1-2
1-59 and 1-60	1-59 and 1-60

2. Retain this sheet in front of manual for reference purposes.

By Order of the Secretary of the Army:

PETER J. SCHOOMAKER
General, United States Army
Chief of Staff

OFFICIAL:

Sandra R. Riley

SANDRA R. RILEY
Administrative Assistant to the Secretary of the Army

0505503

DISTRIBUTION: To be distributed in accordance with Initial Distribution (IDN) 310226, requirements for TM 55-1520-228-23-1.

CHANGE

NO. 30

HEADQUARTERS
DEPARTMENT OF THE ARMY
WASHINGTON, D.C.,13 June 2003

AVIATION UNIT AND INTERMEDIATE MAINTENANCE MANUAL ARMY MODEL OH-58A AND OH-58C HELICOPTERS

DISTRIBUTION STATEMENT A: Approved for public release; distribution is unlimited.

TM 55-1520-228-23-1, dated 28 February 1989, is changed as follows:

1. Remove and insert pages as indicated below. New or changed text material is indicated by a vertical bar in the margin. An illustration change is indicated by a miniature pointing hand.

Remove Pages	Insert Pages
P-1 and P-2	P-1 and P-2
A through G/(H blank)	A through G/(H blank)
1-1 and 1-2	1-1 and 1-2
1-9 and 1-10	1-9 and 1-10
1-13 through 1-20	1-13 through 1-20
1-21 and 1-22	1-21 and 1-22
1-25 and 1-26	1-25 and 1-26
1-37 and 1-38	1-37 and 1-38
1-43 and 1-44	1-43 and 1-44
1-56.1/(1-56.2 blank)	1-56.1/(1-56.2 blank)
1-57 through 1-62	1-57 through 1-62
1-63 and 1-64	1-63 and 1-64
1-66.1 and 1-66.2	1-66.1 and 1-66.2
1-67 through 1-69/(1-70 blank)	1-67 through 1-69/(1-70 blank)
2-1 and 2-2	2-1 and 2-2
2-19 through 2-28	2-19 through 2-28
2-29 through 2-32	2-29 through 2-32
2-39 and 2-40	2-39 and 2-40
—	2-40.1/(2-40.2 blank)
2-57 and 2-58	2-57 and 2-58
2-91 and 2-92	2-91 and 2-92
2-107 through 2-114	2-107 through 2-114
2-121 through 2-124	2-121 through 2-124
2-127 through 2-132	2-127 through 2-132
2-135 and 2-136	2-135 and 2-136
2-139 and 2-140	2-139 and 2-140
2-143 and 2-144	2-143 and 2-144
3-1 and 3-2	3-1 and 3-2
4-5 and 4-6	4-5 and 4-6
4-11 and 4-12	4-11 and 4-12
4-19 through 4-22	4-19 through 4-22
4-22.1 through 4-22.4	4-22.1 through 4-22.4
4-23 and 4-24	4-23 and 4-24
4-27 through 4-32	4-27 through 4-32
4-33 through 4-38	4-33 through 4-38
4-39 and 4-40	4-39 and 4-40
4-41 and 4-42	4-41 and 4-42
4-42.1 and 4-42.2	4-42.1 and 4-42.2
4-55 and 4-56	4-55 and 4-56
5-7 through 5-18	5-7 through 5-18

Remove Pages	Insert Pages
5-39 and 5-40	5-39 and 5-40
5-40.1 and 5-40.2	5-40.1 and 5-40.2
5-41 through 5-46	5-41 through 5-46
5-53 and 5-54	5-53 and 5-54
5-57 and 5-58	5-57 and 5-58
5-67 and 5-68	5-67 and 5-68
5-68.1/(5-68.2 blank)	5-68.1/(5-68.2 blank)
5-79 and 5-80	5-79 and 5-80
5-97 through 5-100	5-97 through 5-100
5-103 and 5-104	5-103 and 5-104
5-111 and 5-112	5-111 and 5-112
5-121 and 5-122	5-121 and 5-122
5-127 and 5-128	5-127 and 5-128
5-139 and 5-140	5-139 and 5-140
5-157 through 5-160	5-157 through 5-160
5-167 and 5-168	5-167 and 5-168
6-11 and 6-12	6-11 and 6-12
6-23 and 6-24	6-23 and 6-24
6-27 and 6-28	6-27 and 6-28
6-35 and 6-36	6-35 and 6-36
6-39 through 6-44	6-39 through 6-44
6-47 through 6-50	6-47 through 6-50
6-55 through 6-58	6-55 through 6-58
6-65 and 6-66	6-65 and 6-66
6-69 through 6-72	6-69 through 6-72
—	6-72.1/(6-72.2 blank)
6-81 and 6-82	6-81 and 6-82
6-91 through 6-94	6-91 through 6-94
6-97 through 6-104	6-97 through 6-104
6-109 through 6-112	6-109 through 6-112
6-115 and 6-116	6-115 and 6-116
6-127 and 6-128	6-127 and 6-128
7-7 and 7-8	7-7 and 7-8
7-11 and 7-12	7-11 and 7-12
7-15 through 7-18	7-15 through 7-18
7-21 and 7-22	7-21 and 7-22
7-27 and 7-28	7-27 and 7-28
7-31 and 7-32	7-31 and 7-32
8-7 and 8-8	8-7 and 8-8
8-19 and 8-20	8-19 and 8-20

2. Retain this sheet in front of manual for reference purposes.

By Order of the Secretary of the Army:

JOHN M. KEANE

General, United States Army
Acting Chief of Staff

OFFICIAL:

JOEL B. HUDSON
Administrative Assistant to the Secretary of the Army

0312106

DISTRIBUTION: To be distributed in accordance with Initial Distribution (IDN) 310226, requirements for TM 55-1520-228-23-1.

URGENT

CHANGE

NO. 29

HEADQUARTERS
DEPARTMENT OF THE ARMY
WASHINGTON, D.C.,20 November 2002

AVIATION UNIT AND INTERMEDIATE MAINTENANCE MANUAL ARMY MODEL OH-58A AND OH-58C HELICOPTERS

DISTRIBUTION STATEMENT A: Approved for public release; distribution is unlimited.

TM 55-1520-228-23-1, dated 28 February 1989, is changed as follows:

1. Remove and insert pages as indicated below. New or changed text material is indicated by a vertical bar in the margin. An illustration change is indicated by a miniature pointing hand.

Remove Pages	Insert Pages
A through G/(H blank)	A through G/(H blank)
1-55 and 1-56	1-55 and 1-56
4-5 and 4-6	4-5 and 4-6
5-109 and 5-110	5-109 and 5-110
7-23 and 7-24	7-23 and 7-24
9-85 and 9-86	9-85 and 9-86

2. Retain this sheet in front of manual for reference purposes.

By Order of the Secretary of the Army:

ERIC K. SHINSEKI
General, United States Army
Chief of Staff

OFFICIAL:

JOEL B. HUDSON
Administrative Assistant to the Secretary of the Army

0231802

DISTRIBUTION: To be distributed in accordance with Initial Distribution (IDN) 310226, requirements for TM 55-1520-228-23-1.

URGENT

CHANGE

NO. 28

HEADQUARTERS
DEPARTMENT OF THE ARMY
WASHINGTON, D.C.,14 July 2000

AVIATION UNIT AND INTERMEDIATE MAINTENANCE MANUAL ARMY MODEL OH-58A AND OH-58C HELICOPTERS

DISTRIBUTION STATEMENT A: Approved for public release; distribution is unlimited.

TM 55-1520-228-23-1, dated 28 February 1989, is changed as follows:

1. Remove and insert pages as indicated below. New or changed text material is indicated by a vertical bar in the margin. An illustration change is indicated by a miniature pointing hand.

Remove Pages	Insert Pages
—	A through F
1-59 and 1-60	1-59 and 1-60
5-99 and 5-100	5-99 and 5-100
—	5-100.1/(5-100.2 blank)
5-123 and 5-124	5-123 and 5-124
5-145 and 5-146	5-145 and 5-146

2. Retain this sheet in front of manual for reference purposes.

By Order of the Secretary of the Army:

ERIC K. SHINSEKI
General, United States Army
Chief of Staff

OFFICIAL:

JOEL B. HUDSON
Administrative Assistant to the Secretary of the Army

0019304

DISTRIBUTION: To be distributed in accordance with Initial Distribution (IDN) 310226, requirements for TM 55-1520-228-23-1.

URGENT

CHANGE

NO. 27

HEADQUARTERS
DEPARTMENT OF THE ARMY
WASHINGTON, D.C.,18 July 1997

AVIATION UNIT AND INTERMEDIATE MAINTENANCE MANUAL ARMY MODEL OH-58A AND OH-58C HELICOPTERS

DISTRIBUTION STATEMENT A: Approved for public release; distribution is unlimited.

TM 55-1520-228-23-1, dated 28 February 1989, is changed as follows:

1. Remove and insert pages as indicated below. New or changed text material is indicated by a vertical bar in the margin. An illustration change is indicated by a miniature pointing hand.

Remove Pages	Insert Pages
1-66.3/(1-66.4 blank)	1-66.3/(1-66.4 blank)
6-125 through 6-128	6-125 through 6-128
—	6-128.1 and 6-128.2
8-31 and 8-32	8-31 and 8-32
—	8-36.1/(8-36.2 blank)

2. Retain this sheet in front of manual for reference purposes.

By Order of the Secretary of the Army:

DENNIS J. REIMER
General, United States Army
Chief of Staff

OFFICIAL:

JOEL B. HUDSON
Administrative Assistant to the Secretary of the Army
03871

DISTRIBUTION: To be distributed in accordance with DA Form 12-31-E, block no. 0226, requirements for TM 55-1520-228-23-1.

URGENT

CHANGE

NO. 26

HEADQUARTERS
DEPARTMENT OF THE ARMY
WASHINGTON, D.C.,3 December 1996

AVIATION UNIT AND INTERMEDIATE MAINTENANCE MANUAL ARMY MODEL OH-58A AND OH-58C HELICOPTERS

DISTRIBUTION STATEMENT A: Approved for public release; distribution is unlimited.

TM 55-1520-228-23-1, dated 28 February 1989, is changed as follows:

1. Remove and insert pages as indicated below. New or changed text material is indicated by a vertical bar in the margin. An illustration change is indicated by a miniature pointing hand.

Remove Pages	Insert Pages
1-57 and 1-58	1-57 and 1-58
1-66.1 and 1-66.2	1-66.1 and 1-66.2
—	1-66.3/(1-66.4 blank)
1-67 and 1-68	1-67 and 1-68

2. Retain this sheet in front of manual for reference purposes.

By Order of the Secretary of the Army:

DENNIS J. REIMER
General, United States Army
Chief of Staff

OFFICIAL:

JOEL B. HUDSON
Administrative Assistant to the Secretary of the Army
02807

DISTRIBUTION: To be distributed in accordance with DA Form 12-31-E, block no. 0226, requirements for TM 55-1520-228-23-1.

URGENT

CHANGE

NO. 25

HEADQUARTERS
DEPARTMENT OF THE ARMY
WASHINGTON, D.C.,4 October 1996

AVIATION UNIT AND INTERMEDIATE MAINTENANCE MANUAL ARMY MODEL OH-58A AND OH-58C HELICOPTERS

DISTRIBUTION STATEMENT A: Approved for public release; distribution is unlimited.

TM 55-1520-228-23-1, dated 28 February 1989, is changed as follows:

1. Remove and insert pages as indicated below. New or changed text material is indicated by a vertical bar in the margin. An illustration change is indicated by a miniature pointing hand.

Remove Pages	Insert Pages
2-29 and 2-30	2-29 and 2-30
6-63 and 6-64	6-63 and 6-64
9-57 and 9-58	9-57 and 9-58

2. Retain this sheet in front of manual for reference purposes.

By Order of the Secretary of the Army:

DENNIS J. REIMER
General, United States Army
Chief of Staff

OFFICIAL:

JOEL B. HUDSON
Administrative Assistant to the Secretary of the Army
02678

DISTRIBUTION: To be distributed in accordance with DA Form 12-31-E, block no. 0226, requirements for TM 55-1520-228-23-1.

CHANGE

NO. 24

HEADQUARTERS
DEPARTMENT OF THE ARMY
WASHINGTON, D.C.,31 August 1996

AVIATION UNIT AND INTERMEDIATE MAINTENANCE MANUAL ARMY MODEL OH-58A AND OH-58C HELICOPTERS

DISTRIBUTION STATEMENT A: Approved for public release; distribution is unlimited.

TM 55-1520-228-23-1, dated 28 February 1989, is changed as follows:

1. Remove and insert pages as indicated below. New or changed text material is indicated by a vertical bar in the margin. An illustration change is indicated by a miniature pointing hand.

Remove Pages	Insert Pages
1-9 and 1-10	1-9 and 1-10
1-13 through 1-20	1-13 through 1-20
1-24.1/(1-24.2 blank)	1-24.1/(1-24.2 blank)
1-31 and 1-32	1-31 and 1-32
1-59 and 1-60	1-59 and 1-60
1-67 and 1-68	1-67 and 1-68
2-5 and 2-6	2-5 and 2-6
2-27 and 2-28	2-27 and 2-28
2-28.1/(2-28.2 blank)	2-28.1/(2-28.2 blank)
2-37 and 2-38	2-37 and 2-38
2-105 and 2-106	2-105 and 2-106
—	2-106.1/(2-106.2 blank)
2-107 through 2-110	2-107 through 2-110
2-137 through 2-140	2-137 through 2-140
3-1 through 3-4	3-1 through 3-4
3-4.1 and 3-4.2	3-4.1 and 3-4.2
3-13 through 3-16	3-13 through 3-16
—	4-6.1/(4-6.2 blank)
4-9 and 4-10	4-9 and 4-10
4-17 and 4-18	4-17 and 4-18
4-22.3 and 4-22.4	4-22.3 and 4-22.4
4–23 and 4-24	4–23 and 4-24
4-27 and 4-28	4-27 and 4-28
5-13 and 5-14	5-13 and 5-14
5-127 and 5-128	5-127 and 5-128
5-157 and 5-158	5-157 and 5-158
5-169 and 5-170	5-169 and 5-170
6-3 through 6-6	6-3 through 6-6
6-13 and 6-14	6-13 and 6-14
6-27 and 6-28	6-27 and 6-28
6-37and 6-38	6-37and 6-38
6-91 through 6-94	6-91 through 6-94
7-21 through 7-24	7-21 through 7-24
8-5 through 8-8	8-5 through 8-8
9-19 and 9-20	9-19 and 9-20
9-20.3 and 9-20.4	9-20.3 and 9-20.4
9-25 and 9-26	9-25 and 9-26
9-27 and 9-28	9-27 and 9-28
—	9-28.1/(9-28.2blank)
9-61 and 9-62	9-61 and 9-62

Remove Pages	Insert Pages
9-71 and 9-72	9-71 and 9-72
9-108.1 through 9-108.4	9-108.1 through 9-108.4
9-108.13 and 9-108.14	9-108.13 and 9-108.14

2. Retain this sheet in front of manual for reference purposes.

By Order of the Secretary of the Army:

DENNIS J. REIMER
General, United States Army

Chief of Staff

OFFICIAL:

JOEL B. HUDSON
Administrative Assistant to the Secretary of the Army

02349

DISTRIBUTION: To be distributed in accordance with DA Form 12-31-E, block no. 0226, requirements for TM 55-1520-228-23-1.

URGENT

CHANGE

NO. 23

HEADQUARTERS
DEPARTMENT OF THE ARMY
WASHINGTON, D.C.,11 June 1996

AVIATION UNIT AND INTERMEDIATE MAINTENANCE MANUAL ARMY MODEL OH-58A AND OH-58C HELICOPTERS

DISTRIBUTION STATEMENT A: Approved for public release; distribution is unlimited.

TM 55-1520-228-23-1, dated 28 February 1989, is changed as follows:

1. Remove and insert pages as indicated below. New or changed text material is indicated by a vertical bar in the margin. An illustration change is indicated by a miniature pointing hand.

Remove Pages	Insert Pages
1-1 and 1-2	1-1 and 1-2
—	1-56.1/(1-56.2 blank)
2-1 and 2-2	2-1 and 2-2
8-9 and 8-10	8-9 and 8-10
8-37 and 8-38	8-37 and 8-38
9-13 through 9-16	9-13 through 9-16

2. Retain this sheet in front of manual for reference purposes.

By Order of the Secretary of the Army:

DENNIS J. REIMER
General, United States Army
Chief of Staff

OFFICIAL:

JOEL B. HUDSON
Administrative Assistant to the Secretary of the Army
01874

DISTRIBUTION: To be distributed in accordance with DA Form 12-31-E, block no. 0226, requirements for TM 55-1520-228-23-1.

URGENT

CHANGE

NO. 22

HEADQUARTERS
DEPARTMENT OF THE ARMY
WASHINGTON, D.C.,15 July 1995

AVIATION UNIT AND INTERMEDIATE MAINTENANCE MANUAL ARMY MODEL OH-58A AND OH-58C HELICOPTERS

DISTRIBUTION STATEMENT A: Approved for public release; distribution is unlimited.

TM 55-1520-228-23-1, dated 28 February 1989, is changed as follows:

1. Remove and insert pages as indicated below. New or changed text material is indicated by a vertical bar in the margin. An illustration change is indicated by a miniature pointing hand.

Remove Pages	Insert Pages
1-1 and 1-2	1-1 and 1-2
1-51 and 1-52	1-51 and 1-52
1-55 through 1-58	1-55 through 1-58
1-63 and 1-64	1-63 and 1-64
1-66.1 and 1-66.2	1-66.1 and 1-66.2
4-31 and 4-32	4-31 and 4-32
—	4-32.1/(4-32.2 blank)
—	4-38.1 and 4-38.2
4-39 and 4-40	4-39 and 4-40
—	4-40.1 and 4-40.2
4-50.1/(4-50.2 blank)	4-50.1/(4-50.2 blank)
5-9 through 5-12	5-9 through 5-12
5-139 and 5-140	5-139 and 5-140
8-37 through 8-42	8-37 through 8-42

2. Retain this sheet in front of manual for reference purposes.

By Order of the Secretary of the Army:

DENNIS J. REIMER
General, United States Army
Chief of Staff

OFFICIAL:

JOEL B. HUDSON
Administrative Assistant to the Secretary of the Army

00515

DISTRIBUTION: To be distributed in accordance with DA Form 12-31-E, block no. 0226, requirements for TM 55-1520-228-23-1.

URGENT

URGENT

CHANGE

NO. 21

HEADQUARTERS
DEPARTMENT OF THE ARMY
WASHINGTON, D.C.,15 September 1994

AVIATION UNIT AND INTERMEDIATE MAINTENANCE MANUAL ARMY MODEL OH-58A AND OH-58C HELICOPTERS

DISTRIBUTION STATEMENT A: Approved for public release; distribution is unlimited.

TM 55-1520-228-23-1, dated 28 February 1989, is changed as follows:

1. Remove and insert pages as indicated below. New or changed text material is indicated by a vertical bar in the margin. An illustration change is indicated by a miniature pointing hand.

Remove Pages	Insert Pages
5-17 and 5-18	5-17 and 5-18
5-40.1 and 5-40.2	5-40.1 and 5-40.2
5-43 and 5-44	5-43 and 5-44
5-93 and 5-94	5-93 and 5-94
5-137 and 5-138	5-137 and 5-138
5-147 and 5-148	5-147 and 5-148
5-155 and 5-156	5-155 and 5-156

2. Retain this sheet in front of manual for reference purposes.

By Order of the Secretary of the Army:

GORDON R. SULLIVAN
General, United States Army
Chief of Staff

OFFICIAL:

MILTON H. HAMILTON
Administrative Assistant to the Secretary of the Army

06748

DISTRIBUTION: To be distributed in accordance with DA Form 12-31-E, block no. 0226, requirements for TM 55-1520-228-23-1.

URGENT

URGENT

CHANGE

NO. 20

HEADQUARTERS
DEPARTMENT OF THE ARMY
WASHINGTON, D.C.,26 July 1994

AVIATION UNIT AND INTERMEDIATE MAINTENANCE MANUAL ARMY MODEL OH-58A AND OH-58C HELICOPTERS

DISTRIBUTION STATEMENT A: Approved for public release; distribution is unlimited.

TM 55-1520-228-23-1, dated 28 February 1989, is changed as follows:

1. Remove and insert pages as indicated below. New or changed text material is indicated by a vertical bar in the margin. An illustration change is indicated by a miniature pointing hand.

Remove Pages	Insert Pages
1-66.1 and 1-66.2	1-66.1 and 1-66.2
3-3 and 3-4	3-3 and 3-4
—	3-4.1 and 3-4.2
3-11 through 3-14	3-11 through 3-14
—	3-14.1 and 3-14.2
5-67 and 5-68	5-67 and 5-68
—	5-68.1/(5-68.2 blank)
5-69 and 5-70	5-69 and 5-70

2. Retain this sheet in front of manual for reference purposes.

By Order of the Secretary of the Army:

GORDON R. SULLIVAN
General, United States Army
Chief of Staff

OFFICIAL:

MILTON H. HAMILTON
Administrative Assistant to the Secretary of the Army
06746

DISTRIBUTION: To be distributed in accordance with DA Form 12-31-E, block no. 0226, requirements for TM 55-1520-228-23-1.

URGENT

CHANGE

NO. 19

HEADQUARTERS
DEPARTMENT OF THE ARMY
WASHINGTON, D.C.,1 March 1994

AVIATION UNIT AND INTERMEDIATE MAINTENANCE MANUAL ARMY MODEL OH-58A AND OH-58C HELICOPTERS

DISTRIBUTION STATEMENT A: Approved for public release; distribution is unlimited.

TM 55-1520-228-23-1, dated 28 February 1989, is changed as follows:

1. Remove and insert pages as indicated below. New or changed text material is indicated by a vertical bar in the margin. An illustration change is indicated by a miniature pointing hand.

Remove Pages	Insert Pages
1-23 and 1-24	1-23 and 1-24
1-61 and 1-62	1-61 and 1-62
1-66.1/(1-66.2 blank)	1-66.1 and 1-66.2
5-11 and 5-12	5-11 and 5-12
5-17 and 5-18	5-17 and 5-18
5-18.1/(5-18.2 blank)	5-18.1 and 5-18.2
8-43 and 8-44	8-43 and 8-44
9-63 and 9-64	9-63 and 9-64

2. Retain this sheet in front of manual for reference purposes.

By Order of the Secretary of the Army:

GORDON R. SULLIVAN
General, United States Army
Chief of Staff

OFFICIAL:

Milton H. Hamilton

MILTON H. HAMILTON
Administrative Assistant to the Secretary of the Army

05817

DISTRIBUTION: To be distributed in accordance with DA Form 12-31-E, block no. 0226, requirements for TM 55-1520-228-23-1.

CHANGE

NO. 18

HEADQUARTERS
DEPARTMENT OF THE ARMY
WASHINGTON, D.C.,28 February 1994

AVIATION UNIT AND INTERMEDIATE MAINTENANCE MANUAL ARMY MODEL OH-58A AND OH-58C HELICOPTERS

DISTRIBUTION STATEMENT A: Approved for public release; distribution is unlimited.

TM 55-1520-228-23-1, dated 28 February 1989, is changed as follows:

1. Remove and insert pages as indicated below. New or changed text material is indicated by a vertical bar in the margin. An illustration change is indicated by a miniature pointing hand.

Remove Pages	Insert Pages
a and b	a through c/(d blank)
i and ii	i and ii
1-1 and 1-2	1-1 and 1-2
1-7 through 1-10	1-7 through 1-10
1-13 through 1-20	1-13 through 1-20
1-21 and 1-22	1-21 and 1-22
1-24.1/(1-24.2 blank)	1-24.1/(1-24.2 blank)
1-29 through 1-32	1-29 through 1-32
1-34.1 and 1-34.2	1-34.1 and 1-34.2
1-39 and 1-40	1-39 and 1-40
1-43 and 1-44	1-43 and 1-44
1-47 and 1-48	1-47 and 1-48
1-51 and 1-52	1-51 and 1-52
1-57 through 1-60	1-57 through 1-60
1-63 through 1-66	1-63 through 1-66
2-1 and 2-2	2-1 and 2-2
—	2-2.1/(2-2.2 blank)
2-5 and 2-6	2-5 and 2-6
2-11 through 2-16	2-11 through 2-16
2-25 and 2-26	2-25 and 2-26
2-29 and 2-30	2-29 and 2-30
2-39 through 2-44	2-39 through 2-44
2-50.1 through 2-50.7/(2-50.8 blank)	2-50.1 through 2-50.7/(2-50.8 blank)
2-51 and 2-52	2-51 and 2-52
2-71 and 2-72	2-71 and 2-72
2-77 and 2-78	2-77 and 2-78
2-101 and 2-102	2-101 and 2-102
2-111 and 2-112	2-111 and 2-112
2-115 and 2-116	2-115 and 2-116
2-121 and 2-122	2-121 and 2-122
2-131 through 2-140	2-131 through 2-140
2-143 and 2-144	2-143 and 2-144
3-1 through 3-6	3-1 through 3-6
3-9 through 3-14	3-9 through 3-14
3-17 through 3-24	3-17 through 3-24
4-5 and 4-6	4-5 and 4-6
4-11 through 4-14	4-11 through 4-14
4-17 through 4-22	4-17 through 4-22
4-23 and 4-24	4-23 and 4-24
4-31 through 4-34	4-31 through 4-34

Remove Pages	Insert Pages
4-37 through 4-42	4-37 through 4-42
—	4-42.1 and 4-42.2
4-43 and 4-44	4-43 and 4-44
4-49 and 4-50	4-49 and 4-50
4-50.1/(4-50.2 blank)	4-50.1/(4-50.2 blank)
4-52.1/(4-52.2 blank)	4-52.1/(4-52.2 blank)
4-53 and 4-54	4-53 and 4-54
5-1 and 5-2	5-1 and 5-2
5-7 through 5-16	5-7 through 5-16
5-25 through 5-30	5-25 through 5-30
5-35 and 5-36	5-35 and 5-36
5-39 and 5-40	5-39 and 5-40
5-40.1/(5-40.2 blank)	5-40.1 and 5-40.2
5-41 through 5-44	5-41 through 5-44
5-55 through 5-58	5-55 through 5-58
5-65 and 5-66	5-65 and 5-66
5-69 and 5-70	5-69 and 5-70
5-75 and 5-76	5-75 and 5-76
5-79 and 5-80	5-79 and 5-80
5-87 and 5-88	5-87 and 5-88
5-93 and 5-94	5-93 and 5-94
5-99 through 5-102	5-99 through 5-102
5-105 through 5-108	5-105 through 5-108
5-123 and 5-124	5-123 and 5-124
5-129 through 5-134	5-129 through 5-134
5-137 through 5-142	5-137 through 5-142
5-144.1/(5-144.2 blank)	5-144.1/(5-144.2 blank)
5-145 and 5-146	5-145 and 5-146
5-153 and 5-154	5-153 and 5-154
5-157 through 5-160	5-157 through 5-160
5-176 and 5-168	5-176 and 5-168
—	5-168.1/(5-168.2 blank)
5-169 and 5-170	5-169 and 5-170
5-183 and 5-184	5-183 and 5-184
5-191 through 5-194	5-191 through 5-194
6-17 through 6-26	6-17 through 6-26
6-27 and 6-28	6-27 and 6-28
6-35 through 6-42	6-35 through 6-42
6-45 and 6-46	6-45 and 6-46
6-49 through 6-54	6-49 through 6-54
—	6-54.1/(6-54.2 blank)
6-55 through 6-58	6-55 through 6-58
6-61 through 6-64	6-61 through 6-64
6-67 through 6-72	6-67 through 6-72
6-79 through 6-86	6-79 through 6-86
6-89 through 6-102	6-89 through 6-102
6-105 and 6-106	6-105 and 6-106
6-109 through 6-112	6-109 through 6-112
6-115 and 6-116	6-115 and 6-116
6-117 and 6-118	6-117 and 6-118
6-125 through 6-128	6-125 through 6-128
6-131 and 6-132	6-131 and 6-132
7-9 through 7-12	7-9 through 7-12
7-21 through 7-24	7-21 through 7-24
7-27 through 7-30	7-27 through 7-30

Remove Pages	Insert Pages
8-1 through 8-12	8-1 through 8-12
8-15 and 8-16	8-15 and 8-16
8-16.1/(8-16.2 blank)	8-16.1/(8-16.2 blank)
8-19 through 8-24	8-19 through 8-24
8-31 and 8-32	8-31 and 8-32
8-35 through 8-38	8-35 through 8-38
8-45 and 8-46	8-45 and 8-46
9-1 and 9-2	9-1 and 9-2
9-21 and 9-22	9-21 and 9-22
9-35 and 9-36	9-35 and 9-36
9-87 and 9-88	9-87 and 9-88
9-108.7 and 9-108.8	9-108.7 and 9-108.8
Index 13 through Index 16	Index 13 through Index 16
Index 19 and Index 20	Index 19 and Index 20
Index 29 and Index 30	Index 29 and Index 30
Index 41 through Index 44	Index 41 through Index 44
Index 51 and Index 52	Index 51 and Index 52

2. Retain this sheet in front of manual for reference purposes.

By Order of the Secretary of the Army:

GORDON R. SULLIVAN
General, United States Army

Chief of Staff

OFFICIAL:

Milton H. Hamilton

MILTON H. HAMILTON
Administrative Assistant to the Secretary of the Army

06158

DISTRIBUTION: To be distributed in accordance with DA Form 12-31-E, block no. 0226, requirements for TM 55-1520-228-23-1.

URGENT

CHANGE

NO. 17

HEADQUARTERS
DEPARTMENT OF THE ARMY
WASHINGTON, D.C.,23 March 1993

AVIATION UNIT AND INTERMEDIATE MAINTENANCE MANUAL ARMY MODEL OH-58A AND OH-58C HELICOPTERS

DISTRIBUTION STATEMENT A: Approved for public release; distribution is unlimited.

TM 55-1520-228-23-1, dated 28 February 1989, is changed as follows:

1. Remove and insert pages as indicated below. New or changed text material is indicated by a vertical bar in the margin. An illustration change is indicated by a miniature pointing hand.

Remove Pages	Insert Pages
4-3 and 4-4	4-3 and 4-4
5-19 and 5-20	5-19 and 5-20
5-37 and 5-38	5-37 and 5-38
5-40.1/(5-40.2 blank)	5-40.1/(5-40.2 blank)

2. Retain this sheet in front of manual for reference purposes.

By Order of the Secretary of the Army:

GORDON R. SULLIVAN
General, United States Army
Chief of Staff

OFFICIAL:

MILTON H. HAMILTON
Administrative Assistant to the Secretary of the Army

03409

DISTRIBUTION: To be distributed in accordance with DA Form 12-31-E, block no. 0226, requirements for TM 55-1520-228-23-1.

URGENT

CHANGE

NO. 16

HEADQUARTERS
DEPARTMENT OF THE ARMY
WASHINGTON, D.C.,16 February 1993

AVIATION UNIT AND INTERMEDIATE MAINTENANCE MANUAL ARMY MODEL OH-58A AND OH-58C HELICOPTERS

DISTRIBUTION STATEMENT A: Approved for public release; distribution is unlimited.

TM 55-1520-228-23-1, dated 28 February 1989, is changed as follows:

1. Remove and insert pages as indicated below. New or changed text material is indicated by a vertical bar in the margin. An illustration change is indicated by a miniature pointing hand.

Remove Pages	Insert Pages
5-95 through 5-98	5-95 through 5-98
6-65 and 6-66	6-65 and 6-66

2. Retain this sheet in front of manual for reference purposes.

By Order of the Secretary of the Army:

GORDON R. SULLIVAN
General, United States Army
Chief of Staff

OFFICIAL:

MILTON H. HAMILTON
Administrative Assistant to the Secretary of the Army

03442

DISTRIBUTION: To be distributed in accordance with DA Form 12-31-E, block no. 0226, requirements for TM 55-1520-228-23-1.

URGENT

CHANGE

NO. 15

HEADQUARTERS
DEPARTMENT OF THE ARMY
WASHINGTON, D.C.,22 January 1993

AVIATION UNIT AND INTERMEDIATE MAINTENANCE MANUAL ARMY MODEL OH-58A AND OH-58C HELICOPTERS

DISTRIBUTION STATEMENT A: Approved for public release; distribution is unlimited.

TM 55-1520-228-23-1, dated 28 February 1989, is changed as follows:

1. Remove and insert pages as indicated below. New or changed text material is indicated by a vertical bar in the margin. An illustration change is indicated by a miniature pointing hand.

Remove Pages	Insert Pages
1-15 and 1-16	1-15 and 1-16
9-17 through 9-20	9-17 through 9-20
—	9-20.1/(9-20.2 blank)
—	9-20.3 and 9-20.4

2. Retain this sheet in front of manual for reference purposes.

By Order of the Secretary of the Army:

GORDON R. SULLIVAN
General, United States Army
Chief of Staff

OFFICIAL:

MILTON H. HAMILTON
Administrative Assistant to the Secretary of the Army

03440

DISTRIBUTION: To be distributed in accordance with DA Form 12-31-E, block no. 0226, requirements for TM 55-1520-228-23-1.

URGENT

CHANGE

NO. 14

HEADQUARTERS
DEPARTMENT OF THE ARMY
WASHINGTON, D.C.,30 October 1992

AVIATION UNIT AND INTERMEDIATE MAINTENANCE MANUAL ARMY MODEL OH-58A AND OH-58C HELICOPTERS

DISTRIBUTION STATEMENT A: Approved for public release; distribution is unlimited.

TM 55-1520-228-23-1, dated 28 February 1989, is changed as follows:

1. Remove and insert pages as indicated below. New or changed text material is indicated by a vertical bar in the margin. An illustration change is indicated by a miniature pointing hand.

Remove Pages	Insert Pages
1-66.1/(1-66.2 blank)	1-66.1/(1-66.2 blank)

2. Retain this sheet in front of manual for reference purposes.

By Order of the Secretary of the Army:

GORDON R. SULLIVAN
General, United States Army
Chief of Staff

OFFICIAL:

MILTON H. HAMILTON
Administrative Assistant to the Secretary of the Army

02509

DISTRIBUTION: To be distributed in accordance with DA Form 12-31-E, block no. 0226, requirements for TM 55-1520-228-23-1.

URGENT

URGENT

CHANGE

NO. 13

HEADQUARTERS
DEPARTMENT OF THE ARMY
WASHINGTON, D.C.,31 July 1992

AVIATION UNIT AND INTERMEDIATE MAINTENANCE MANUAL ARMY MODEL OH-58A AND OH-58C HELICOPTERS

DISTRIBUTION STATEMENT A: Approved for public release; distribution is unlimited.

TM 55-1520-228-23-1, dated 28 February 1989, is changed as follows:

1. Remove and insert pages as indicated below. New or changed text material is indicated by a vertical bar in the margin. An illustration change is indicated by a miniature pointing hand.

Remove Pages	Insert Pages
1-51 and 1-52	1-51 and 1-52
1-59 through 1-62	1-59 through 1-62
1-65 and 1-66	1-65 and 1-66
—	1-66.1/1-66.2
6-113 through 6-116	6-113 through 6-116
9-63 and 9-64	9-63 and 9-64
—	9-64.1/ 9-64.2

2. Retain this sheet in front of manual for reference purposes.

By Order of the Secretary of the Army:

GORDON R. SULLIVAN
General, United States Army
Chief of Staff

OFFICIAL:

MILTON H. HAMILTON
Administrative Assistant to the Secretary of the Army

02255

DISTRIBUTION: To be distributed in accordance with DA Form 12-31-E, block no. 0226, requirements for TM 55-1520-228-23-1.

URGENT

CHANGE

NO. 12

HEADQUARTERS
DEPARTMENT OF THE ARMY
WASHINGTON, D.C.,27 May 1992

AVIATION UNIT AND INTERMEDIATE MAINTENANCE MANUAL ARMY MODEL OH-58A AND OH-58C HELICOPTERS

DISTRIBUTION STATEMENT A: Approved for public release; distribution is unlimited.

TM 55-1520-228-23-1, dated 28 February 1989, is changed as follows:

1. Remove and insert pages as indicated below. New or changed text material is indicated by a vertical bar in the margin. An illustration change is indicated by a miniature pointing hand.

Remove Pages	Insert Pages
4-11 and 4-12	4-11 and 4-12
4-22.1 and 4-22.2	4-22.1 and 4-22.2

2. Retain this sheet in front of manual for reference purposes.

By Order of the Secretary of the Army:

GORDON R. SULLIVAN
General, United States Army
Chief of Staff

OFFICIAL:

MILTON H. HAMILTON
Administrative Assistant to the Secretary of the Army

01485

DISTRIBUTION: To be distributed in accordance with DA Form 12-31-E, block no. 0226, requirements for TM 55-1520-228-23-1.

URGENT

CHANGE

NO. 11

HEADQUARTERS
DEPARTMENT OF THE ARMY
WASHINGTON, D.C.,30 April 1992

AVIATION UNIT AND INTERMEDIATE MAINTENANCE MANUAL ARMY MODEL OH-58A AND OH-58C HELICOPTERS

DISTRIBUTION STATEMENT A: Approved for public release; distribution is unlimited.

TM 55-1520-228-23-1, dated 28 February 1989, is changed as follows:

1. Remove and insert pages as indicated below. New or changed text material is indicated by a vertical bar in the margin. An illustration change is indicated by a miniature pointing hand.

Remove Pages	Insert Pages
1-55 and 1-56	1-55 and 1-56
1-59 through 1-62	1-59 through 1-62
1-67 through 1-69/1-70	1-67 through 1-69/1-70
6-113 through 6-116	6-113 through 6-116

2. Retain this sheet in front of manual for reference purposes.

By Order of the Secretary of the Army:

GORDON R. SULLIVAN
General, United States Army
Chief of Staff

OFFICIAL:

MILTON H. HAMILTON
Administrative Assistant to the Secretary of the Army

00773

DISTRIBUTION: To be distributed in accordance with DA Form 12-31-E, block no. 0226, requirements for TM 55-1520-228-23-1.

URGENT

CHANGE

NO. 10

HEADQUARTERS
DEPARTMENT OF THE ARMY
WASHINGTON, D.C.,31 October 1991

AVIATION UNIT AND INTERMEDIATE MAINTENANCE MANUAL ARMY MODEL OH-58A AND OH-58C HELICOPTERS

DISTRIBUTION STATEMENT A: Approved for public release; distribution is unlimited.

TM 55-1520-228-23-1, dated 28 February 1989, is changed as follows:

1. Remove and insert pages as indicated below. New or changed text material is indicated by a vertical bar in the margin. An illustration change is indicated by a miniature pointing hand.

Remove Pages	Insert Pages
4-22.1 through 4-22.4	4-22.1 through 4-22.4
4-23 and 4-24	4-23 and 4-24

2. Retain this sheet in front of manual for reference purposes.

By Order of the Secretary of the Army:

GORDON R. SULLIVAN
General, United States Army
Chief of Staff

OFFICIAL:

MILTON H. HAMILTON
Administrative Assistant to the Secretary of the Army

00017

DISTRIBUTION: To be distributed in accordance with DA Form 12-31-E, block no. 0226, requirements for TM 55-1520-228-23-1.

CHANGE

NO. 9

HEADQUARTERS
DEPARTMENT OF THE ARMY
WASHINGTON, D.C.,20 September 1991

AVIATION UNIT AND INTERMEDIATE MAINTENANCE MANUAL ARMY MODEL OH-58A AND OH-58C HELICOPTERS

DISTRIBUTION STATEMENT A: Approved for public release; distribution is unlimited.

TM 55-1520-228-23-1, dated 28 February 1989, is changed as follows:

1. Remove and insert pages as indicated below. New or changed text material is indicated by a vertical bar in the margin. An illustration change is indicated by a miniature pointing hand.

Remove Pages	Insert Pages
9-108.19 and 9-108.20	9-108.19 and 9-108.20
9-108.20.1 through 9-108.20.4	9-108.20.1 through 9-108.20.4
Index 1 through Index 4	Index 1 through Index 4
Index 9 and Index 10	Index 9 and Index 10

2. Retain this sheet in front of manual for reference purposes.

By Order of the Secretary of the Army:

GORDON R. SULLIVAN
General, United States Army
Chief of Staff

OFFICIAL:

PATRICIA P. HICKERSON
Colonel, United States Army
The Adjutant General

DISTRIBUTION: To be distributed in accordance with DA Form 12-31-E, block no. 0226, AVUM and AVIM maintenance requirements for TM 55-1520-228-23-1.

URGENT

CHANGE

NO. 8

HEADQUARTERS
DEPARTMENT OF THE ARMY
WASHINGTON, D.C.,3 July 1991

AVIATION UNIT AND INTERMEDIATE MAINTENANCE MANUAL ARMY MODEL OH-58A AND OH-58C HELICOPTERS

DISTRIBUTION STATEMENT A: Approved for public release; distribution is unlimited.

TM 55-1520-228-23-1, dated 28 February 1989, is changed as follows:

1. Remove and insert pages as indicated below. New or changed text material is indicated by a vertical bar in the margin. An illustration change is indicated by a miniature pointing hand.

Remove Pages	Insert Pages
1-65 and 1-66	1-65 and 1-66
4-21 and 4-22	4-21 and 4-22
4-22.1 and 4-22.2	4-22.1 and 4-22.2
4-23 and 4-24	4-23 and 4-24

2. Retain this sheet in front of manual for reference purposes.

By Order of the Secretary of the Army:

CARL E. VUONO
General, United States Army
Chief of Staff

OFFICIAL:

PATRICIA P. HICKERSON
Colonel, United States Army
The Adjutant General

DISTRIBUTION: To be distributed in accordance with DA Form 12-31-E, block no. 0226, AVUM and AVIM maintenance requirements for TM 55-1520-228-23-1.

URGENT

CHANGE

NO. 7

HEADQUARTERS
DEPARTMENT OF THE ARMY
WASHINGTON, D.C.,24 May 1991

AVIATION UNIT AND INTERMEDIATE MAINTENANCE MANUAL ARMY MODEL OH-58A AND OH-58C HELICOPTERS

DISTRIBUTION STATEMENT A: Approved for public release; distribution is unlimited.

TM 55-1520-228-23-1, dated 28 February 1989, is changed as follows:

1. Remove and insert pages as indicated below. New or changed text material is indicated by a vertical bar in the margin. An illustration change is indicated by a miniature pointing hand.

Remove Pages	Insert Pages
1-21 and 1-22	1-21 and 1-22
1-35 and 1-36	1-35 and 1-36
1-39 and 1-40	1-39 and 1-40
1-39 and 1-40	1-39 and 1-40
—	1-46.1/1-46.2
1-47 through 1-52	1-47 through 1-52
—	1-52.1/1-52.2
1-53 through 1-56	1-53 through 1-56
1-56.1/1-56.2	1-56.1/1-56.2
1-57 through 1-62	1-57 through 1-62
—	1-62.1/1-62.2
1-63 and 1-64	1-63 and 1-64
1-67 and 1-68	1-67 and 1-68
—	1-69/1-70
2-31 and 2-32	2-31 and 2-32
—	2-32.1/2-32.2
2-133 through 2-136	2-133 through 2-136
4-21 and 4-22	4-21 and 4-22
—	4-22.1/4-22.2
4-23 and 4-24	4-23 and 4-24
4-49 and 4-50	4-49 and 4-50
—	4-50.1/4-50.2
5-21 and 5-22	5-21 and 5-22
5-39 and 5-40	5-39 and 5-40
—	5-48.1.5-48.2
5-49 and 5-50	5-49 and 5-50
6-45 and 6-46	6-45 and 6-46
6-103 through 6-106	6-103 through 6-106
6-113 through 6-116	6-113 through 6-116
—	6-116.1/6-116.2
8-21 and 8-22	8-21 and 8-22
9-25 and 9-26	9-25 and 9-26
—	9-26.1/9-26.2

2. Retain this sheet in front of manual for reference purposes.

By Order of the Secretary of the Army:

CARL E. VUONO
General, United States Army

Chief of Staff

OFFICIAL:

PATRICIA P. HICKERSON

Colonel, United States Army
The Adjutant General

DISTRIBUTION: To be distributed in accordance with DA Form 12-31-E, block no. 0226, AVUM and AVIM maintenance requirements for TM 55-1520-228-23-1.

URGENT

CHANGE

NO. 6

HEADQUARTERS
DEPARTMENT OF THE ARMY
WASHINGTON, D.C.,15 September 1990

AVIATION UNIT AND INTERMEDIATE MAINTENANCE MANUAL ARMY MODEL OH-58A AND OH-58C HELICOPTERS

DISTRIBUTION STATEMENT A: Approved for public release; distribution is unlimited.

TM 55-1520-228-23-1, dated 28 February 1989, is changed as follows:

1. Remove and insert pages as indicated below. New or changed text material is indicated by a vertical bar in the margin. An illustration change is indicated by a miniature pointing hand.

Remove Pages	Insert Pages
—	5-22.1 and 5-22.2

2. Retain this sheet in front of manual for reference purposes.

By Order of the Secretary of the Army:

CARL E. VUONO
General, United States Army
Chief of Staff

OFFICIAL:

THOMAS F. SIKORA
Brigadier General, United States Army
The Adjutant General

DISTRIBUTION: To be distributed in accordance with DA Form 12-31-E, block no. 0226, AVUM and AVIM maintenance requirements for TM 55-1520-228-23-1.

URGENT

CHANGE

NO. 5

HEADQUARTERS
DEPARTMENT OF THE ARMY
WASHINGTON, D.C.,24 August 1990

AVIATION UNIT AND INTERMEDIATE MAINTENANCE MANUAL ARMY MODEL OH-58A AND OH-58C HELICOPTERS

DISTRIBUTION STATEMENT A: Approved for public release; distribution is unlimited.

TM 55-1520-228-23-1, dated 28 February 1989, is changed as follows:

1. Remove and insert pages as indicated below. New or changed text material is indicated by a vertical bar in the margin. An illustration change is indicated by a miniature pointing hand.

Remove Pages	Insert Pages
1-34.1 and 1-34.2	1-34.1 and 1-34.2
4-51 and 4-52	4-51 and 4-52
—	4-52.1/4-52.2
4-53 and 4-54	4-53 and 4-54
5-17 and 5-18	5-17 and 5-18
—	5-18.1/5-18.2
5-19 through 5-22	5-19 through 5-22
5-37 through 5-40	5-37 through 5-40
—	5-40.1/5-40.2
8-15 and 8-16	8-15 and 8-16
—	6-16.1/8-16.2
8-19 and 8-20	8-19 and 8-20
9-25 and 9-26	9-25 and 9-26
9-29 and 9-30	9-29 and 9-30

2. Retain this sheet in front of manual for reference purposes.

By Order of the Secretary of the Army:

CARL E. VUONO
General, United States Army
Chief of Staff

OFFICIAL:

THOMAS F. SIKORA
Brigadier General, United States Army
The Adjutant General

DISTRIBUTION: To be distributed in accordance with DA Form 12-31-E, block no. 0226, AVUM and AVIM maintenance requirements for TM 55-1520-228-23-1.

URGENT

CHANGE

NO. 4

HEADQUARTERS
DEPARTMENT OF THE ARMY
WASHINGTON, D.C.,15 March 1990

AVIATION UNIT AND INTERMEDIATE MAINTENANCE MANUAL ARMY MODEL OH-58A AND OH-58C HELICOPTERS

DISTRIBUTION STATEMENT A: Approved for public release; distribution is unlimited.

TM 55-1520-228-23-1, dated 28 February 1989, is changed as follows:

1. Remove and insert pages as indicated below. New or changed text material is indicated by a vertical bar in the margin. An illustration change is indicated by a miniature pointing hand.

Remove Pages	Insert Pages
1-67 and 1-68	1-67 and 1-68

2. Retain this sheet in front of manual for reference purposes.

By Order of the Secretary of the Army:

CARL E. VUONO
General, United States Army
Chief of Staff

OFFICIAL:

WILLIAM J. MEEHAN II
Brigadier General, United States Army
The Adjutant General

DISTRIBUTION: To be distributed in accordance with DA Form 12-31, AVUM and AVIM Maintenance requirements for the OH-58A/C Helicopters, Observation.

URGENT

CHANGE

NO. 3

HEADQUARTERS
DEPARTMENT OF THE ARMY
WASHINGTON, D.C.,27 November 1989

AVIATION UNIT AND INTERMEDIATE MAINTENANCE MANUAL ARMY MODEL OH-58A AND OH-58C HELICOPTERS

DISTRIBUTION STATEMENT A: Approved for public release; distribution is unlimited.

TM 55-1520-228-23-1, dated 28 February 1989, is changed as follows:

1. Remove and insert pages as indicated below. New or changed text material is indicated by a vertical bar in the margin. An illustration change is indicated by a miniature pointing hand.

Remove Pages	Insert Pages
1-31 through 1-34	1-31 through 1-34
—	1-34.1 and 1-34.2
2-50.1 and 2-50.2	2-50.1 and 2-50.2
5-143 and 5-144	5-143 and 5-144
—	5-144.1/5-144.2
5-147 and 5-148	5-147 and 5-148
5-151 through 5-154	5-151 through 5-154

2. Retain this sheet in front of manual for reference purposes.

By Order of the Secretary of the Army:

CARL E. VUONO
General, United States Army
Chief of Staff

OFFICIAL:

WILLIAM J. MEEHAN II
Brigadier General, United States Army
The Adjutant General

DISTRIBUTION: To be distributed in accordance with DA Form 12-31, AVUM and AVIM Maintenance requirements for the OH-58A/C Helicopters, Observation.

URGENT

CHANGE

NO. 2

HEADQUARTERS
DEPARTMENT OF THE ARMY
WASHINGTON, D.C.,23 October 1989

AVIATION UNIT AND INTERMEDIATE MAINTENANCE MANUAL ARMY MODEL OH-58A AND OH-58C HELICOPTERS

DISTRIBUTION STATEMENT A: Approved for public release; distribution is unlimited.

TM 55-1520-228-23-1, dated 28 February 1989, is changed as follows:

1. Remove and insert pages as indicated below. New or changed text material is indicated by a vertical bar in the margin. An illustration change is indicated by a miniature pointing hand.

Remove Pages	Insert Pages
1-53 through 1-56	1-53 through 1-56
—	1-56.1/1-56.2
1-67 and 1-68	1-67 and 1-68
6-11 and 6-12	6-11 and 6-12
—	6-12.1/6-12.2
6-15 through 6-18	6-15 through 6-18
6-21 through 6-26	6-21 through 6-26
—	6-26.1/6-26.2
6-27 and 6-28	6-27 and 6-28

2. Retain this sheet in front of manual for reference purposes.

By Order of the Secretary of the Army:

CARL E. VUONO
General, United States Army
Chief of Staff

OFFICIAL:

WILLIAM J. MEEHAN II
Brigadier General, United States Army
The Adjutant General

DISTRIBUTION: To be distributed in accordance with DA Form 12-31, AVUM and AVIM Maintenance requirements for the OH-58A/C Helicopters, Observation.

CHANGE

NO. 1

HEADQUARTERS
DEPARTMENT OF THE ARMY
WASHINGTON, D.C.,1 February 1990

AVIATION UNIT AND INTERMEDIATE MAINTENANCE MANUAL ARMY MODEL OH-58A AND OH-58C HELICOPTERS

DISTRIBUTION STATEMENT A: Approved for public release; distribution is unlimited.

TM 55-1520-228-23-1, dated 28 February 1989, is changed as follows:

1. Remove and insert pages as indicated below. New or changed text material is indicated by a vertical bar in the margin. An illustration change is indicated by a miniature pointing hand.

Remove Pages	Insert Pages
P-1 and P-2	P-1 and P-2
a and b	a and b
i and ii	i and ii
1-1 and 1-2	1-1 and 1-2
1-9 and 1-10	1-9 and 1-10
—	1-10.1/1-10.2
1-15 through 1-20	1-15 through 1-20
—	1-20.1/1-20.2
1-23 and 1-24	1-23 and 1-24
—	1-24.1/1-24.2
1-63 and 1-64	1-63 and 1-64
1-67 and 1-68	1-67 and 1-68
2-1 and 2-2	2-1 and 2-2
2-5 and 2-6	2-5 and 2-6
—	2-6.1/2-6.2
2-27 and 2-28	2-27 and 2-28
—	2-28.1/2-28.2
2-107 through 2-110	2-107 through 2-110
3-25 and 3-26	3-25 and 3-26
—	3-26.1/3-26.2
9-53 through 9-56	9-53 through 9-56
—	9-56.1/9-56.2
9-57 and 9-58	9-57 and 9-58
9-101 through 9-108	9-101 through 9-108
—	9-108.1 through 9-108.25/108–26
Index 1 through Index 10	Index 1 through Index 10
—	Index 10.1/Index10.2
Index 11 through Index 26	Index 11 through Index 26
—	Index 26.1/Index 26.2
Index 27 through Index 34	Index 27 through Index 34
—	Index 34.1/Index 34.2
Index 35 through Index 52	Index 35 through Index 52

2. Retain this sheet in front of manual for reference purposes.

By Order of the Secretary of the Army:

CARL E. VUONO
General, United States Army

Chief of Staff

OFFICIAL:

WILLIAM J. MEEHAN II

Brigadier General, United States Army
The Adjutant General

DISTRIBUTION: To be distributed in accordance with DA Form 12-31, AVUM and AVIM Maintenance requirements for the OH-58A/C Helicopters, Observation.

LIST OF EFFECTIVE PAGES

Dates of issue for original and changed pages are:

Original . . . . . 28 February 1989
Change 1 . . . . . 1 February 1990
Change 2 . . . . . 23 October 1989
Change 3 . . . . . 27 November 1989
Change 4 . . . . . 15 March 1990
Change 5 . . . . . 24 August 1990
Change 6 . . . . . 15 September 1990
Change 7 . . . . . 24 May 1991
Change 8 . . . . . 3 July 1991
Change 9 . . . . . 20 September 1991
Change 10 . . . . . 31 October 1991
Change 11 . . . . . 30 April 1992
Change 12 . . . . . 27 May 1992
Change 13 . . . . . 31 July 1992
Change 14 . . . . . 30 October 1992
Change 15 . . . . . 22 January 1993
Change 16 . . . . . 16 February 1993
Change 17 . . . . . 23 March 1993
Change 18 . . . . . 28 February 1994
Change 19 . . . . . 1 March 1994
Change 20 . . . . . 26 July 1994
Change 21 . . . . . 15 September 1994
Change 22 . . . . . 15 July 1995
Change 23 . . . . . 11 June 1996
Change 24 . . . . . 31 August 1996
Change 25 . . . . . 4 October 1996
Change 26 . . . . . 3 December 1996
Change 27 . . . . . 18 July 1997
Change 28 . . . . . 14 July 2000
Change 29 . . . . . 20 November 2002
Change 30 . . . . . 13 June 2003
Change 31 . . . . . 2 March 2005
Change 32 . . . . . 10 June 2005
Change 33 . . . . . 31 October 2005
Change 34 . . . . . 1 August 2007
Change 35 . . . . . .17 November 2008
Change 36 . . . . . 28 June 2010

TOTAL NUMBER OF PAGES IN THIS PUBLICATION IS 1032 , CONSISTING OF THE FOLLOWING:

Page No.	*Change No.
Cover	0
a	36
b	32
c	32
d	32
A	36
B	36
C	36
D	36
E	36
F	36
G	36
H	36
I	36
J	36
i	36
ii	36
P-1	32
P-2	36
1-1	0
1-2	36
1-3	0
1-4	0
1-5	0
1-6	0
1-7	36
1-8	36
1-9	36
1-10	36
1-10.1	1
1-10.2 Blank	1
1-11	36
1-12	0
1-13	24
1-14	36
1-15	36
1-16	36
1-17	32
1-18	36
1-19	32
1-20	36
1-20.1	36
1-20.2 Blank	1
1-21	32
1-22	0
1-23	19
1-24	36
1-24.1	24
1-24.2 Blank	24
1-25	30
1-26	32
1-27	0
1-28	0
1-29	18
1-30	32
1-31	0
1-32	24
1-33	0

***Zero in this column indicates an original page.**

LIST OF EFFECTIVE PAGES (Cont)

Page No.	*Change No.
1-34	3
1-34.1	18
1-34.2	18
1-35	36
1-36	0
1-37	30
1-38	0
1-39	7
1-40	18
1-41	0
1-42	36
1-43	30
1-44	18
1-45	0
1-46	7
1-46.1	7
1-46.2 Blank	7
1-47	36
1-48	18
1-49	36
1-50	36
1-51	36
1-52	36
1-52.1	36
1-52.2 Blank	36
1-53	36
1-54	36
1-55	36
1-56	36
1-56.1	36
1-56.2 Blank	36
1-57	34
1-58	36
1-58.1	36
1-58.2	36
1-59	36
1-60	34
1-61	36
1-62	36
1-62.1	36
1-62.2	32
1-63	30
1-64	7
1-65	0
1-66	36
1-66.1	36
1-66.2	36
1-66.3	36
1-66.4 Blank	36
1-67	30
1-68	36
1-69	35
1-70 Blank	35
2-1	36
2-2	23
2-2.1	18
2-2.2 Blank	18
2-3	32
2-4	0
2-5	24
2-6	36
2-6.1 Blank	36
2-6.2	36
2-7	0
2-8	0
2-9	0
2-10	0
2-11	0
2-12	18
2-13	0
2-14	32
2-15	0
2-16	32
2-17	0
2-18	0
2-19	32
2-20	30
2-21	30
2-22	0
2-23	0
2-24	30
2-25	0
2-26	30
2-27	30
2-28	36
2-28.1	36
2-28.2 Blank	36
2-29	30
2-30	18
2-31	32
2-32	30
2-32.1	7
2-32.2 Blank	7
2-33	0
2-34	0
2-35	0
2-36	0
2-37	0
2-38	24
2-39	0
2-40	30
2-40.1	30
2-40.2 Blank	30
2-41	30
2-42	34
2-42.1	34
2-42.2 Blank	34
2-43	18

***Zero in this column indicates an original page.**

LIST OF EFFECTIVE PAGES (Cont)

Page No.	*Change No.
2-44	0
2-45	0
2-46	0
2-47	0
2-48	0
2-49	0
2-50	34
2-50.1	18
2-50.2	18
2-50.3	18
2-50.4	18
2-50.5	0
2-50.6	18
2-50.7	18
2-50.8 Blank	18
2-51	18
2-52	0
2-53	0
2-54	0
2-55	0
2-56	0
2-57	0
2-58	30
2-59	0
2-60	36
2-61	0
2-62	36
2-63	0
2-64	0
2-65	0
2-66	0
2-67	36
2-68	0
2-69	0
2-70	0
2-71	0
2-72	18
2-73	0
2-74	36
2-75	36
2-76	36
2-77	18
2-78	36
2-79	0
2-80	0
2-81	0
2-82	36
2-83	0
2-84	0
2-85	0
2-86	0
2-87	0
2-88	36
2-89	32
2-90	0
2-91	34
2-92	34
2-92.1	32
2-92.2 Blank	32
2-93	0
2-94	32
2-95	0
2-96	32
2-97	0
2-98	0
2-99	0
2-100	32
2-101	32
2-102	0
2-103	0
2-104	0
2-105	0
2-106	24
2-106.1	24
2-106.2 Blank	24
2-107	36
2-108	36
2-108.1	34
2-108.2	34
2-109	34
2-110	36
2-111	30
2-112	18
2-113	30
2-114	32
2-115	18
2-116	32
2-117	0
2-118	0
2-119	32
2-120	32
2-121	18
2-122	30
2-123	30
2-124	0
2-125	0
2-126	0
2-127	30
2-128	0
2-129	0
2-130	34
2-131	30
2-132	32
2-133	0
2-134	18
2-135	30
2-136	0
2-137	0

***Zero in this column indicates an original page.**

LIST OF EFFECTIVE PAGES (Cont)

Page No.	*Change No.
2-138	32
2-139	30
2-140	32
2-141	32
2-142	0
2-143	32
2-144	30
2-145	0
2-146	0
2-147	0
2-148	0
2-149	0
2-150	0
2-151	0
2-152	0
2-153	0
2-154	0
2-155	0
2-156	0
2-157	0
2-158	0
2-159	0
2-160	0
2-161	0
2-162	0
2-163	0
2-164	0
2-165	0
2-166	0
2-166.1	0
2-166.2 Blank	0
2-167	0
2-168	0
2-168.1	18
2-168.2	18
2-169	0
2-170	0
2-171	0
2-172	0
2-173	0
2-174	0
2-175	0
2-176	0
2-177	0
2-178 Blank	0
3-1	36
3-2	36
3-3	24
3-4	20
3-4.1	20
3-4.2	24
3-5	0
3-6	18
3-7	0
3-8	0
3-9	0
3-10	18
3-11	18
3-12	32
3-13	24
3-14	20
3-14.1	20
3-14.2	20
3-15	0
3-16	24
3-17	18
3-18	0
3-19	18
3-20	18
3-21	0
3-22	18
3-23	0
3-24	18
3-25	36
3-26	1
3-26.1	1
3-26.2 Blank	1
3-27	0
3-28	0
3-29	0
3-30	0
3-31	0
3-32 Blank	0
4-1	36
4-2	36
4-3	17
4-4	0
4-5	0
4-6	32
4-6.1	24
4-6.2 Blank	24
4-7	0
4-8	36
4-9	24
4-10	0
4-11	36
4-12	36
4-13	0
4-14	18
4-15	36
4-16	36
4-17	36
4-18	36
4-19	36
4-20	32
4-21	30
4-22	18
4-22.1	32

***Zero in this column indicates an original page.**

LIST OF EFFECTIVE PAGES (Cont)

Page No.	*Change No.
4-22.2	32
4-22.3	36
4-22.4	36
4-22.5	32
4-22.6 Blank	32
4-23	32
4-24	30
4-25	0
4-26	0
4-27	30
4-28	0
4-29	36
4-30	30
4-31	36
4-32	18
4-32.1	22
4-32.2 Blank	22
4-33	30
4-34	0
4-35	32
4-36	0
4-37	32
4-38	0
4-38.1	22
4-38.2	22
4-39	32
4-40	36
4-40.1	34
4-40.2	22
4-41	30
4-42	18
4-42.1	30
4-42.2	30
4-43	18
4-44	0
4-45	36
4-46	0
4-47	0
4-48	0
4-49	18
4-50	18
4-50.1	22
4-50.2 Blank	22
4-51	36
4-52	36
4-52.1	18
4-52.2 Blank	18
4-53	5
4-54	36
4-55	32
4-56	0
5-1	36
5-2	36
5-3	36

Page No.	*Change No.
5-4	0
5-5	0
5-6	0
5-7	36
5-8	30
5-9	18
5-10	30
5-11	36
5-12	36
5-13	32
5-14	34
5-15	34
5-16	30
5-17	36
5-18	36
5-18.1	19
5-18.2	19
5-19	17
5-20	0
5-21	7
5-22	7
5-22.1	6
5-22.2	6
5-23	0
5-24	0
5-25	18
5-26	0
5-27	0
5-28	18
5-29	0
5-30	18
5-31	0
5-32	0
5-33	0
5-34	0
5-35	0
5-36	18
5-37	17
5-38	5
5-39	30
5-40	18
5-40.1	30
5-40.2	18
5-41	18
5-42	36
5-42.1	33
5-42.2 Blank	33
5-43	0
5-44	32
5-45	34
5-46	30
5-47	0
5-48	0
5-48.1	7

***Zero in this column indicates an original page.**

LIST OF EFFECTIVE PAGES (Cont)

Page No.	*Change No.
5-48.2 Blank	7
5-49	7
5-50	32
5-51	0
5-52	0
5-53	32
5-54	0
5-55	18
5-56	0
5-57	36
5-58	32
5-59	0
5-60	0
5-61	32
5-62	0
5-63	0
5-64	0
5-64.1	0
5-64.2	0
5-65	32
5-66	32
5-67	32
5-68	36
5-68.1	34
5-68.2 Blank	34
5-69	20
5-70	0
5-71	0
5-72	0
5-73	0
5-74	32
5-75	0
5-76	18
5-77	0
5-78	0
5-79	0
5-80	32
5-80.1	32
5-80.2 Blank	32
5-81	0
5-82	0
5-83	0
5-84	0
5-85	0
5-86	0
5-87	0
5-88	32
5-89	0
5-90	0
5-91	0
5-92	0
5-93	0
5-94	32
5-95	0

Page No.	*Change No.
5-96	16
5-97	30
5-98	30
5-99	32
5-100	28
5-100.1	28
5-100.2 Blank	28
5-101	18
5-102	32
5-103	0
5-104	36
5-105	32
5-106	18
5-107	36
5-108	0
5-109	29
5-110	0
5-111	0
5-112	32
5-113	0
5-114	0
5-115	0
5-116	0
5-117	0
5-118	0
5-119	36
5-120	0
5-121	0
5-122	30
5-123	28
5-124	32
5-124.1	33
5-124.2 Blank	33
5-125	0
5-126	0
5-127	0
5-128	30
5-129	0
5-130	18
5-131	0
5-132	18
5-133	18
5-134	0
5-135	0
5-136	0
5-137	32
5-138	0
5-139	0
5-140	35
5-141	32
5-142	32
5-143	32
5-144	32
5-144.1	32

***Zero in this column indicates an original page.**

LIST OF EFFECTIVE PAGES (Cont)

Page No.	*Change No.
5-144.2 Blank	32
5-145	0
5-146	28
5-147	21
5-148	3
5-149	0
5-150	0
5-151	0
5-152	32
5-153	32
5-154	32
5-155	0
5-156	36
5-157	36
5-158	32
5-159	32
5-160	30
5-161	0
5-162	0
5-163	0
5-164	0
5-165	0
5-166	0
5-167	32
5-168	0
5-168.1	18
5-168.2 Blank	18
5-169	36
5-170	36
6-1	0
6-2	0
6-3	0
6-4	24
6-5	24
6-6	36
6-7	0
6-8	0
6-9	0
6-10	0
6-11	0
6-12	36
6-12.1	2
6-12.2 Blank	2
6-13	0
6-14	36
6-15	36
6-16	36
6-17	36
6-18	0
6-19	36
6-20	32
6-21	36
6-22	32
6-23	0
6-24	36
6-25	0
6-26	36
6-26.1	2
6-26.2 Blank	2
6-27	24
6-28	30
6-29	0
6-30	0
6-31	32
6-32	0
6-33	0
6-34	0
6-35	18
6-36	34
6-37	34
6-38	18
6-39	36
6-40	36
6-41	34
6-42	34
6-42.1	34
6-42.2 Blank	34
6-43	0
6-44	30
6-45	32
6-46	32
6-47	32
6-48	30
6-49	30
6-50	18
6-51	18
6-52	18
6-53	18
6-54	0
6-54.1	18
6-54.2 Blank	18
6-55	30
6-56	32
6-57	0
6-58	36
6-59	0
6-60	34
6-60.1	34
6.60.2 Blank	34
6-61	0
6-62	32
6-63	0
6-64	25
6-65	16
6-66	30
6-67	18
6-68	0
6-69	30

***Zero in this column indicates an original page.**

LIST OF EFFECTIVE PAGES (Cont)

Page No.	*Change No.
6-70	18
6-71	0
6-72	32
6-72.1	30
6-72.2 Blank	30
6-73	0
6-74	0
6-75	0
6-76	0
6-77	0
6-78	0
6-79	0
6-80	18
6-81	30
6-82	30
6-83	32
6-84	32
6-85	18
6-86	32
6-87	32
6-88	0
6-89	32
6-90	0
6-91	32
6-92	24
6-93	33
6-94	30
6-95	32
6-96	0
6-97	36
6-98	18
6-99	30
6-100	32
6-101	18
6-102	30
6-103	36
6-104	34
6-104.1	34
6-104.2 Blank	34
6-105	7
6-106	18
6-107	0
6-108	0
6-109	0
6-110	32
6-111	0
6-112	32
6-113	0
6-114	13
6-115	0
6-116	33
6-116.1	33
6-116.2 Blank	33
6-117	18
6-118	0
6-119	0
6-120	32
6-121	32
6-122	32
6-122.1	0
6-122.2 Blank	0
6-123	0
6-124	0
6-125	27
6-126	18
6-127	30
6-128	32
6-128.1	32
6-128.2	27
6-129	32
6-130	0
6-131	32
6-132	32
7-1	0
7-2	0
7-3	0
7-4	0
7-5	0
7-6	0
7-7	32
7-8	32
7-9	32
7-10	18
7-11	36
7-12	34
7-13	32
7-14	0
7-15	32
7-16	30
7-17	0
7-18	32
7-19	0
7-20	0
7-21	34
7-22	35
7-22.1	34
7-22.2 Blank	34
7-23	36
7-24	36
7-25	0
7-26	0
7-27	18
7-28	32
7-29	32
7-30	32
7-31	30
7-32	30
8-1	0

***Zero in this column indicates an original page.**

LIST OF EFFECTIVE PAGES (Cont)

Page No.	*Change No.
8-2	18
8-3	0
8-4	18
8-5	32
8-6	0
8-7	32
8-8	30
8-9	32
8-10	18
8-11	18
8-12	0
8-13	0
8-14	32
8-15	18
8-16	36
8-16.1	18
8-16.2 Blank	18
8-17	0
8-18	0
8-19	30
8-20	0
8-21	18
8-22	0
8-23	18
8-24	18
8-25	32
8-26	0
8-27	0
8-28	0
8-29	0
8-30	0
8-31	27
8-32	18
8-33	0
8-34	0
8-35	18
8-36	0
8-36.1	27
8-36.2 Blank	27
8-37	23
8-38	22
8-39	22
8-40	22
8-41	22
8-42	0
8-43	19
8-44	0
8-45	18
8-46	0
8-47	32
8-48 Blank	32
9-1	18
9-2	0
9-3	0
9-4	0
9-5	0
9-6	0
9-7	0
9-8	0
9-9	0
9-10	0
9-11	0
9-12	0
9-13	0
9-14	23
9-15	23
9-16	0
9-17	0
9-18	15
9-19	32
9-20	0
9-20.1	32
9-20.2 Blank	32
9-20.3	15
9-20.4	24
9-21	18
9-22	18
9-23	0
9-24	0
9-25	0
9-26	36
9-26.1	7
9-26.2 Blank	7
9-27	32
9-28	24
9-28.1	24
9-28.2 Blank	24
9-29	0
9-30	5
9-31	0
9-32	0
9-33	0
9-34	0
9-35	18
9-36	32
9-36.1	32
9-36.2 Blank	32
9-37	0
9-38	0
9-39	0
9-40	0
9-41	0
9-42	0
9-43	0
9-44	0
9-45	0
9-46	0
9-47	0

***Zero in this column indicates an original page.**

LIST OF EFFECTIVE PAGES (Cont)

Page No.	*Change No.
9-48	0
9-49	0
9-50	0
9-51	0
9-52	32
9-53	36
9-54	0
9-55	36
9-56	1
9-56.1	1
9-56.2 Blank	1
9-57	36
9-58	25
9-59	0
9-60	0
9-61	0
9-62	24
9-63	19
9-64	36
9-64.1	13
9-64.2 Blank	13
9-65	0
9-66	0
9-67	0
9-68	0
9-69	0
9-70	0
9-71	0
9-72	24
9-73	0
9-74	0
9-75	32
9-76	33
9-77	0
9-78	0
9-79	0
9-80	0
9-81	0
9-82	0
9-83	0
9-84	32
9-85	32
9-86	29
9-87	18
9-88	32
9-89	0
9-90	0
9-91	0
9-92	0
9-93	0
9-94	0
9-95	0
9-96	0
9-97	0
9-98	0
9-99	0
9-100	0
9-101	1
9-102	1
9-103	1
9-104	1
9-105	1
9-106	1
9-107	1
9-108	36
9-109	36
9-110	0
Index-1 thru Index-33/Index-34 Blank	36

***Zero in this column indicates an original page.**

TECHNICAL MANUAL

No. 55-1520-228-23-1

U.S. ARMY AVIATION
AND MISSILE COMMAND
28 February 1989

AVIATION UNIT AND INTERMEDIATE MAINTENANCE MANUAL
ARMY MODEL
OH-58A AND OH-58C HELICOPTERS
(NSN 1520-00-169-7137) EIC:ROA
(NSN 1520-01-020-4216) EIC:ROB

REPORTING ERRORS AND RECOMMENDING IMPROVEMENTS

You can improve this manual. If you find mistakes or if you know of a way to improve procedures, please let us know. Mail your letter or DA Form 2028 (Recommended Changes to Publications and Blank Forms) located at the back of this manual, directly to: Commander, U.S. Army Aviation and Missile Command, ATTN: AMSAM-MMA-NP, Redstone Arsenal, AL 35898-5000. A reply will be furnished to you. You may also send your comments electronically to our E-mail address is 2028@redstone.army.mil. or by fax 256-842-6546/DSN 788-6546. For the World Wide Web use: https://amcom2028.redstone.army.mil. Instructions for sending an electronic 2028 may be found at the back of this manual immediately preceding the hard copy 2028.

OZONE DEPLETING CHEMICALS INFORMATION

This document has been reviewed for the presence of Class I Ozone Depleting Chemicals by the Engineering, Environment, and Logistics Oversight Office. As of the base document through Change 30, dated 13 June 2003. All references to Class I Ozone Depleting Chemicals have been removed from this document by substitution with chemicals that do not cause atmospheric ozone depletion. Except Bromotrifluoromethane (CF3Br); Fire Extinguisher Agent (Halon 1301). A waiver dated September 1999 to allow continuing use of Halon 1301 has been granted in the OH-58A/C weapon system.

This document has been reviewed for the presence of Solvents containing hazardous materials as defined by the EPCRA 302 and 313 lists by the Engineering, Environment, and Logistics Oversight Office. As of the base document through change 11, dated 12 January 1998, all references to Solvents containing hazardous materials have been removed from this document by substitution with non-hazardous or less hazardous materials where possible.

DISTRIBUTION STATEMENT A: **Approved for public release; distribution is unlimited.**

TABLE OF CONTENTS

		Page
CHAPTER 1	AIRCRAFT GENERAL	1-1
Section I	SERVICING	1-1
Section II	LUBRICATION	1-25
Section III	HANDLING, JACKING, MOORING, HOISTING, AND SLING LOADING	1-25
Section IV	INSPECTION REQUIREMENTS	1-37
Section V	OVERHAUL AND RETIREMENT SCHEDULE	1-67
CHAPTER 2	AIRFRAME	2-1
Section I	FUSELAGE	2-1
Section II	TAILBOOM	2-112
Section III	PYLON	2-132
Section IV	WING	2-154
Section V	EXTRUSION CHART	2-154
Section VI	WIRE STRIKE PROTECTION SYSTEM	2-154
CHAPTER 3	ALIGHTING GEAR	3-1
Section I		3-1
Section II	LANDING GEAR	3-1
Section II	SKIDS AND STRUTS	3-26
Section III	FLOAT LANDING GEAR SYSTEM	3-26
Section IV	BRAKES	3-31
Section V	SKIS	3-31
CHAPTER 4	POWER PLANT	4-1
Section I	POWER PLANT	4-1
Section II	COOLING SYSTEM	4-20

* This manual supersedes TM 55-1520-228-23-1 dated 4 August 1978, including all changes.

TABLE OF CONTENTS (Cont)

		Page
Section IV	EXHAUST SYSTEM	4-27
Section V	OIL SYSTEM	4-31
Section VI	IGNITION SYSTEM	4-40.2
Section VII	POWER CONTROLS	4-40.2
CHAPTER 5	SECTION IROTORS	5-1
Section II	MAIN ROTOR HUB	5-11
Section III	MAIN ROTOR BLADES	5-57
Section IV	MAIN ROTOR CONTROLS	5-68
Section V	TAIL ROTOR	5-107
Section VI	TAIL ROTOR HUB AND CONTROLS	5-119
Section VII.	TAIL ROTOR BLADES	5-157
Section VII	TRACKING PROCEDURES (ALL MODELS)	5-170
CHAPTER 6	DRIVE TRAIN SYSTEM	6-1
Section I	MAIN DRIVESHAFT	6-12
Section II.	CLUTCHES	6-28
Section III	MAIN TRANSMISSION	6-42
Section IV	TAIL ROTOR DRIVESHAFT	6-66
Section V	INTERMEDIATE GEARBOX	6-102
Section VI	TAIL ROTOR GEARBOX	6-103
Section VII	OIL SYSTEM	6-122
CHAPTER 7	HYDRAULIC SYSTEM	7-1
Section I	FLIGHT CONTROL	7-1
Section II	HYDRAULIC PUMP	7-11
Section III	SOLENOID VALVE	7-16
Section IV	SERVOACTUATORS (CYCLIC AND COLLECTIVE)	7-19
Section V	SERVOACTUATOR SUPPORT	7-24
Section VI	PRESSURE SWITCH	7-28
Section VII	HYDRAULIC RESERVOIR	7-28
Section VIII	HYDRAULIC FILTERS	7-29
Section IX	HYDRAULIC HOSES, LINES, AND QUICK-DISCONNECTS	7-31
Section X	HYDRAULIC CHECK VALVE	7-31
Section XI	HYDRAULIC RELIEF VALVE	7-32
CHAPTER 8	INSTRUMENT SYSTEMS	8-1
Section I	ENGINE, ROTOR, AND TRANSMISSION INSTRUMENTS	8-3
Section II	FLIGHT INSTRUMENTS	8-21
Section III	NAVIGATION INSTRUMENTS	8-36
Section IV	MISCELLANEOUS INSTRUMENTS	8-37
CHAPTER 9	ELECTRICAL SYSTEM	9-1
Section I	DIRECT CURRENT POWER DISTRIBUTION SYSTEM	9-1
Section II	ALTERNATING CURRENT SYSTEM	9-66
Section III	STARTING SYSTEM	9-67
Section IV	IGNITION SYSTEM	9-70
Section V	LIGHTING PROVISIONS	9-72
Section VI	MISCELLANEOUS EQUIPMENT.	9-93
INDEX		Index-1

PREFACE

P-1. GENERAL

This manual is the official document for Aviation Unit and Intermediate Maintenance of Army Model OH-58A and OH-58C Helicopters.

The purpose of this manual is to familiarize you with the maintenance functions to be performed at the Aviation Unit and Intermediate Maintenance levels. The Table of Contents for this manual is provided to assist in determining the chapter in the manual in which individual functions are covered. This manual provides all essential information for personnel to accomplish Aviation Unit and Intermediate Maintenance on the complete airframe, its components, and systems, excluding the armament and avionics subsystem as indicated for Aviation Unit and Intermediate Maintenance activities in the Maintenance Allocation Chart (MAC). (Refer to Appendix B.)

P-2. QUALITY ASSURANCE/QUALITY CONTROL (QA/QC)

Personnel will assure proper maintenance has been performed by verification of dimensions and tolerances as set forth within this manual.

P-3. DESCRIPTION

The helicopter described in this manual is a single engine, light observation helicopter which features a low silhouette and low vulnerability to meet combat requirements. The fuselage consists of two main sections; the forward section and the aft, or boom section. This helicopter is capable of operating from prepared or unprepared landing areas by day or night. Minimum instrumentation has been provided in event of inadvertent IFR flight. (Refer to AR 95-1.) Maximum visibility is afforded the crew by extensive use of transparent plastic panels at the top, front, bottom, and sides of the cabin. For principal dimensions, refer to TM 55-1520-228-10.

P-4. DESTRUCTION OF ARMY MATERIAL TO PREVENT ENEMY USE

For destruction of Army material to prevent enemy use, refer to TM 750-244-1-5.

P-5. MAINTENANCE OF FORMS AND RECORDS

Maintenance of forms, records, and reports which are to be used by maintenance personnel at all maintenance levels are listed in and prescribed by DA PAM 738-751.

P-6. WARNINGS, CAUTIONS, AND NOTES

Warnings, cautions, and notes are used to emphasize important and critical instructions and are used for the following conditions:

WARNING

An operating procedure, practice, etc., which if not correctly followed, could result in personal injury or loss of life.

CAUTION

An operating procedure, practice, etc., which, if not strictly observed, could result in damage to or destruction of equipment.

NOTE

An operating procedure, condition, etc., which is essential to highlight.

P-7. AUTHORITY FOR SUBSTITUTION

Substitution or interchange of items of material for maintenance of Department of the Army aircraft/helicopter shall not be authorized, nor shall orders be issued for shipment. Substitution or interchangeability shall only be authorized by AMCOM, ATTN: AMSAM-EN, Redstone Arsenal, AL 35898-5000.

P-8. SPECIAL TOOLS AND EQUIPMENT

Aviation Unit (AVUM) and Intermediate maintenance (AVIM) special tools and equipment will be found in TM 55-1520-228-23P Repair Parts and Special Tools List (RPSTL). Special tools and test equipment for complex tasks are included in this manual.

P-9. CALIBRATION

Equipment requiring calibration shall be indicated and reference made to a publication(s) containing the applicable procedures.

Helicopter components, accessories, and instruments requiring calibration shall be specified in Chapter 1.

Special tools and test equipment shall be calibrated as specified in TB 750-25, Army Metrology and Calibration System and TB 43-180, Calibration Procedure.

P-10. STORAGE

Refer to Appendix E for Storage of Aircraft.

P-11. DESIGNATOR SYMBOLS

Designator symbols used in conjunction with text contents, text headings, and illustration titles are used to indicate limited effectivity of the material. Symbol A indicates material is applicable only to OH-58A helicopter. Symbol C indicates material is applicable only to OH-58C helicopter. If material applies to all series and configurations, no designator symbol will be used.
OE OIL ENGINE,
OTS OIL Turbine Oil,
OHA Oil Hydraulic Aircraft.

P-12. EXPLANATION OF CHANGE SYMBOLS

Changes, except as noted below to the text and tables, including new material on added pages, are indicated by a vertical line in the outer margin extending close to the entire area of the material affected; exception: pages with emergency markings, which consist of black diagonal lines around three edges, may have the vertical line or change symbol placed along the inner margins. Symbols show current changes only. A miniature pointing hand symbol is used to denote a change to an illustration. However, a vertical bar in the outer margin, rather than miniature pointing hand is utilized where there have been extensive changes made to an illustration. Change symbols are not utilized to indicate changes in the following:

Introductory material

Indexes and tabular data where changes cannot be identified

Blank space resulting from the deletion of text, an illustration, or a table

Correction of minor inaccuracies, such as spelling, punctuation, relocation of material, etc., unless such correction changes the meaning of instructive information and procedures.

P-13. ENGINEERING AUTHORIZATION

All requests for engineering authorization, when required by this manual will be forwarded to Commander, U.S. Army Aviation and Missile Command, ATTN: AMSAM-RD-SE-TD-CM, Redstone Arsenal, AL 35898-5000. Urgent requests shall be clearly identified to ensure priority handling and response. The requests shall include detailed information of the problem, e.g., sketches, photographs, dimensional data, etc., to assist in the evaluation and prompt reply.

P-14. USE OF WORDS SHALL, SHOULD, AND MAY

Within this technical manual the word "shall" is used to indicate a mandatory requirement. The word "should" is used to indicate a non-mandatory but preferred method of accomplishment. The word "may" is used to indicate an acceptable method of accomplishment.

CHAPTER 1
AIRCRAFT GENERAL

SECTION I. SERVICING

1-1. SERVICING.

1-2. DESCRIPTION — SERVICING. Instructions and information for complete servicing of helicopter with fuel, oil, and hydraulic fluid are provided in the following paragraphs. Location of fillers, sight gages, and drains are shown on servicing diagrams as required, with indications of how frequently each reservoir should be checked and serviced. Refer to Figure for servicing diagram. Instructions for use of grease and other lubricants refer to Lubrication Requirements Section II, this chapter.

1-3. FUEL SYSTEM. The fuel supply system consists of a single bladder type cell, fuel pump, and lines. The filler cap (10, Figure) is located on the right side of helicopter aft of passenger door. Helicopters are equipped with a crashworthy fuel system, self-sealing TANK CAPACITY is 71.5 U.S. Gallons.

1-4. PRECAUTIONS IN FUEL SERVICING AND DEFUELING.

WARNING

Observe the following precautions in all fuel servicing and defueling operations as applicable. Refer to FM 10-68 and FM 10-69 for additional precautions prior to servicing the helicopter.

a. Position auxiliary ground power unit on windward side of helicopter.

b. Do not refuel or defuel during electrical storms.

c. Do not refuel or defuel while ground radar sets are operating within 300 feet of helicopter.

d. Servicing personnel must not wear metal taps on shoes.

e. Ensure battery switch is in OFF position and external power is disconnected before refueling or defueling helicopter.

f. Ground helicopter at receptacle located adjacent to filler cap on right side of helicopter; to filler nozzle before removing filler cap.

g. Fuel truck shall be grounded (truck to ground and truck to helicopter). Helicopter shall be grounded to the same ground point as the fuel truck.

h. Do not use splash-filling. Fill tanks slowly and evenly.

i. After completion of servicing, wash-down, and remove any spillover of jet fuel. This fuel does not evaporate as rapidly as gasoline, and constitutes a fire hazard for a much longer time. Cleaning materials which have become saturated with fuel shall be disposed of in a designated area well away from buildings.

j. In event of fuel spillage on personnel, clothing shall be washed down thoroughly with clear water before removing clothing.

k. Refuelling will be accomplished as soon as possible after landing to keep moisture condensation to a minimum.

1-5. SERVICING — FUEL SYSTEM.

CAUTION

Insert nozzle carefully in a generally downward direction, avoiding contact with internal fuel hose. Fuel nozzles must be hand held during servicing.

a. Fill tank cells with specified jet fuel (C75). Crashworthy fuel tank capacity is 71.5 gallons. The

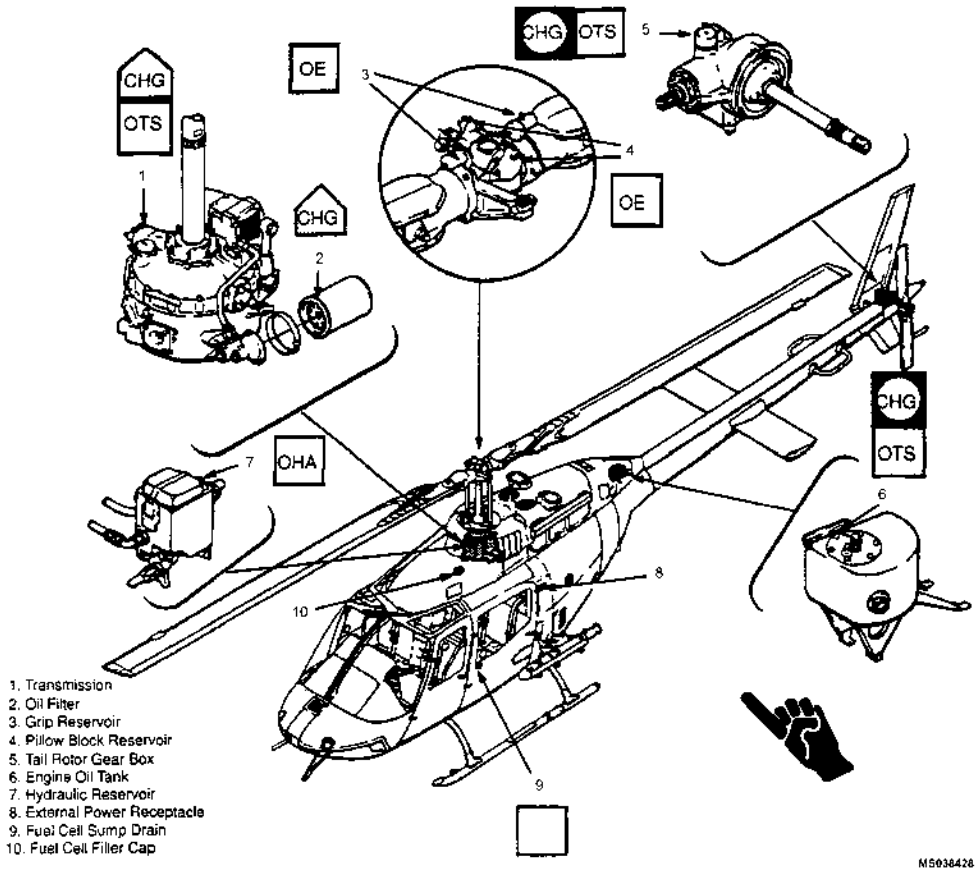

		Symbol	Specification
CHG	Change each 300 hours	OE	MIL-L-2104
CHG	Change each 100 hours*	OTS	MIL-L-7808
	Deleted Change each 200 hours***		DOD-L-85734
	Daily	OHA	MIL-H-5606 MIL-H-53282

CAUTION

Lubrication oil made to MIL-L-7808 by Shell Oil Company under their part number 307, qualifications number 7D-1 shall not be used in engine or aircraft systems. It contains additives which are harmful to seals in the systems.

CAUTION

Lubrication oil DOD-L-85734 will not be used in the engine.

NOTE

*On OH-58A/C without MWO 1-1520-228-50-44 completed, drain and refill lubrication system of the T63-A-720 engine after each 100 hours of operation.

Deleted

*** After completion of MWO 1-1520-228-50-44 scavenge oil filter kit, service engine oil every 300 hours or 12 months.

NOTE

After completion of MWO 55-1520-228-50-25, service gearbox to oil level indicator line only.

NOTE

Items 8 and 10 are located on right side of aircraft.

NOTE

On helicopters with standard landing gear, gearbox oil level must be 1/8 inch above oil level indicator oil line. On helicopters with high landing gear or floats, maintain oil level at indicator line

following fuel servicing instructions apply to helicopters incorporating the closed circuit refueling provision.

b. Closed Circuit Refueling.

CAUTION

The closed circuit refueling receptacle is subject to damage at the gravity refueling port. Refer to figure 1-2. This damage can cause external fuel leakage during subsequent closed circuit refueling operations. To preclude damage to the receptacle, the closed circuit nozzle will be used if possible when refueling. If, however, the receptacle has been previously damaged and leakage occurs, the following must be observed:

Closed circuit refueling operations with a leaking receptacle shall be discontinued. Gravity refueling method shall be used until the receptacle can be replaced or repaired.

(1) Ground the helicopter at the receptacle, located adjacent to the filler cap on the helicopter, to the filler-nozzle and remove filler cap.

(2) Ensure that gravity refueling port is closed. If not, rotate inner sleeve counterclockwise until gravity refueling port is closed and flange of sleeve is in contact with rivet at base of receiver cylinder. Refer to figure 1-3.

CAUTION

Ensure that servicing unit pressure is not above 125 psi while refueling.

(3) Insert fueling nozzle into receiver and actuate automatic nozzle lever to ON or FLOW position. Pin at base of nozzle will momentarily indicate when fuel flow stops.

(4) Fuel flow will automatically shut off when normal fuel level is reached. Just prior to normal shut off, fuel flow may cycle several times as fuel level is reached. Gage on servicing unit will indicate when flow is stopped.

(5) When fuel flow has stopped, actuate lever on nozzle to OFF, disconnect nozzle from receiver and replace filler cap.

(6) Disconnect fuel nozzle ground and rewind hose assembly.

(7) Disconnect servicing unit ground at helicopter.

(8) Disconnect servicing unit ground at grounding stake.

CAUTION

If helicopter is equipped with closed circuit refueling system and fuel servicing unit is not equipped with related nozzle for closed circuit refueling, a gravity system may be used providing the servicing nozzle does not exceed 1.75 inches outside diameter. To refuel, utilizing the gravity nozzle, it is necessary to position the inner sleeve of receiver until slot is lined up with fuel port in bottom of receiver. Position nozzle into port in order to bypass closed circuit valve. Damage could result to the closed circuit refueling system if caution is not used in positioning nozzle into inner sleeve of fuel receiver at fuel port.

c. Gravity Refueling.

(1) Ground the helicopter at the receptacle, located adjacent to the filler cap on the helicopter, to the filler-nozzle and remove filler cap.

(2) Rotate inner sleeve clockwise until sleeve clears the port in bottom of fuel receiver. Refer to figure 1-3.

(3) Position nozzle into port of fuel receiver.

(4) Fill to specified level.

(5) Remove nozzle and rotate inner sleeve counterclockwise until gravity refueling port is closed and flange of inner sleeve is in contact with rivet at base of receiver cylinder.

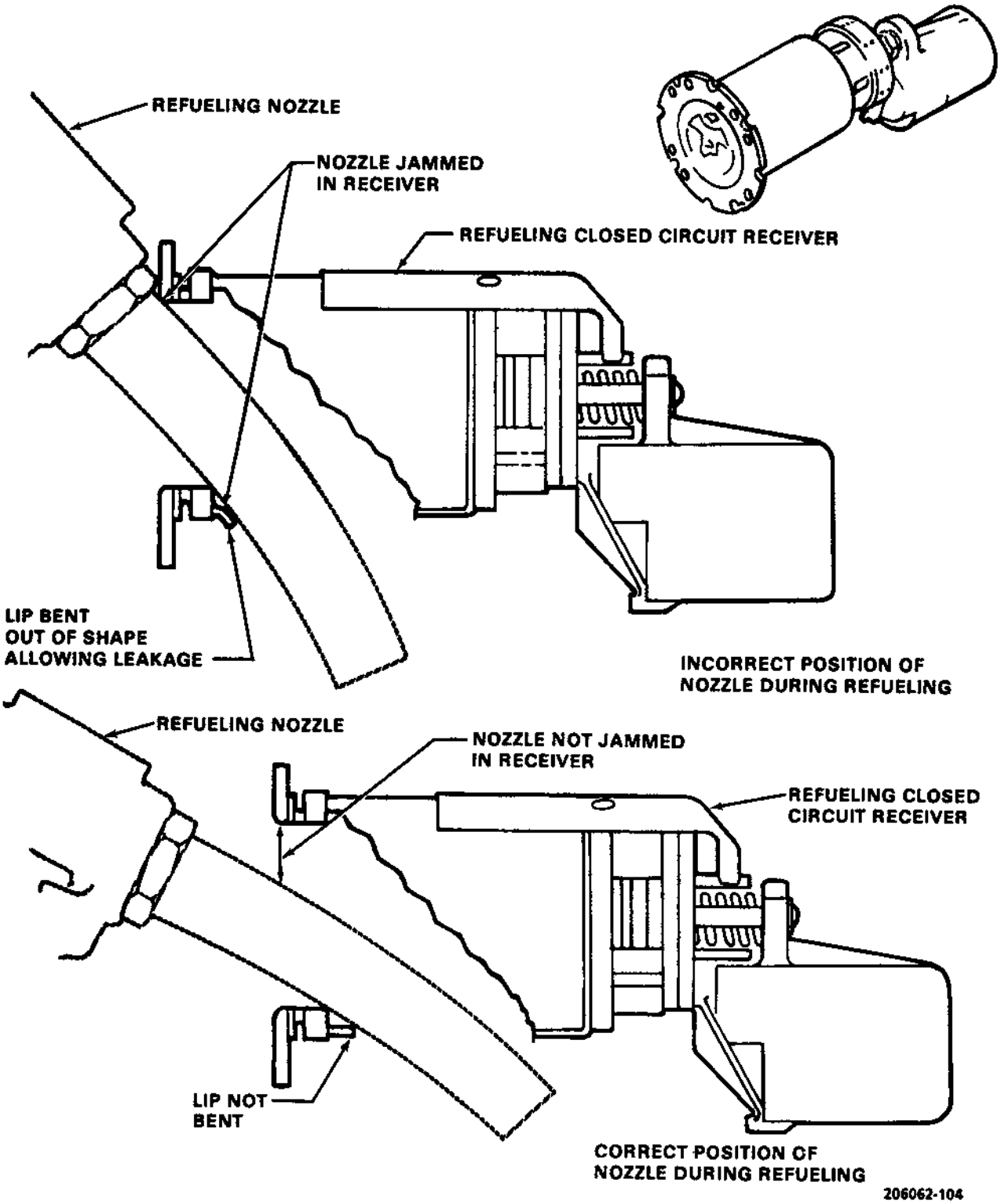

Figure 1-2. Gravity Refueling with Closed Circuit Receiver

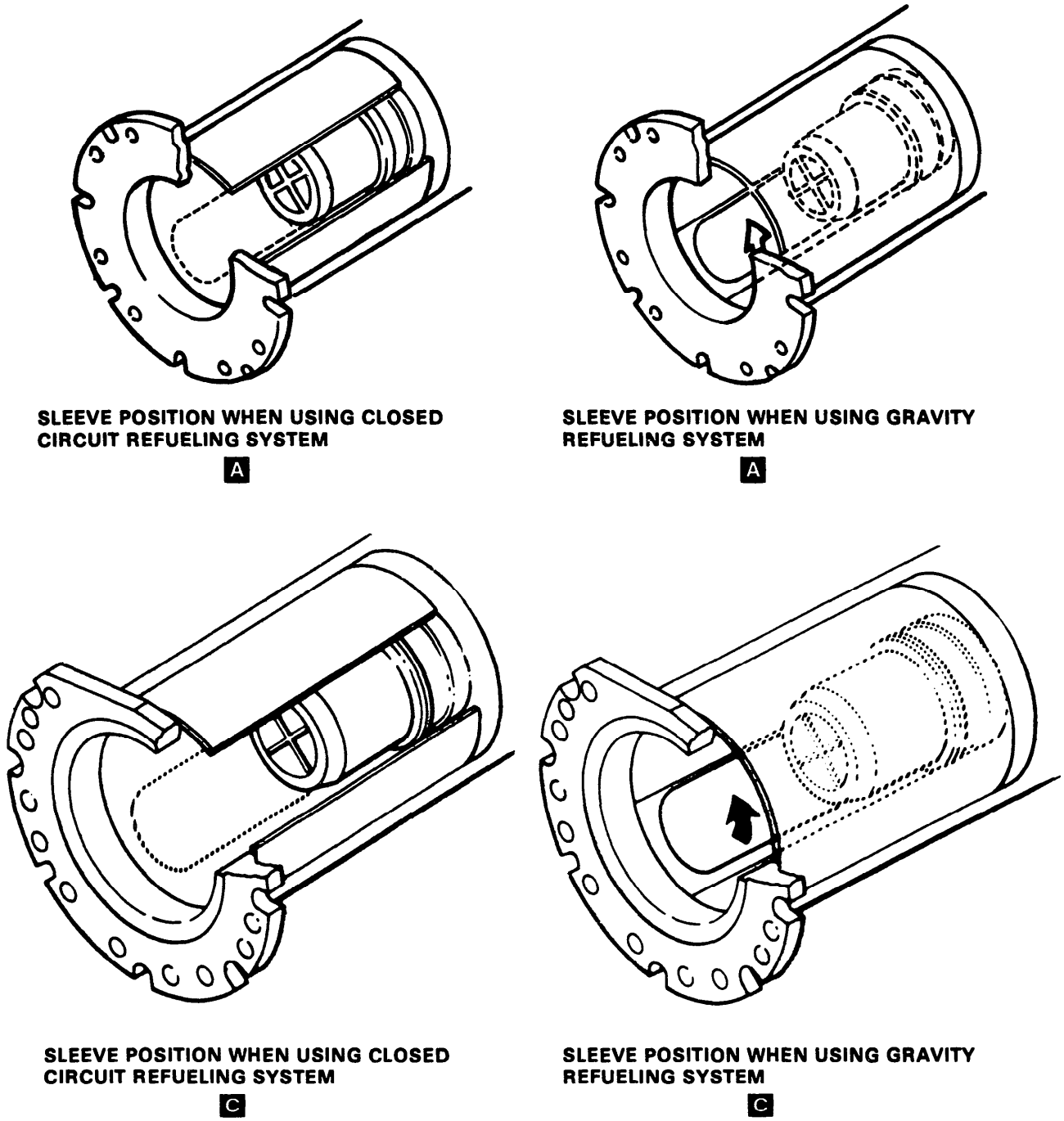

Figure 1-3. Refueling Receptacle

(6) Reinstall filler cap.

(7) Disconnect fuel nozzle ground and rewind hose.

(8) Disconnect servicing unit ground at helicopter.

(9) Disconnect servicing unit ground at grounding stake.

1-6. FUEL SYSTEM SERVICING (RAPID (HOT) REFUELING).

WARNING

Aircraft may be rapid (hot) refueled with engine/engines running, electrical power on, radios on, weapons systems on with safety covers/guards/switches in SAFE position, and any computer systems operating that would require reprogramming.

a. Precautions.

NOTE

Servicing personnel shall comply with all safety precautions and procedures in FM 10-68.

(1) Ground the helicopter at the receptacle, located adjacent to the filler cap on the helicopter, to the filler-nozzle before removing filler cap.

(2) Servicing unit shall be grounded (servicing unit to ground and servicing unit to helicopter). The helicopter should be grounded to the same ground point as is the servicing unit.

(3) After completion of servicing, remove nozzle, install cap and disconnect all grounds from helicopter.

b. Servicing - Fuel System. Fill tank cells with specified jet fuel (C75). Crashworthy fuel tank capacity is 71.5 gallons. The following fuel servicing instructions apply to helicopters incorporating the closed circuit refueling provision.

c. Before Rapid (Hot) Refueling.

WARNING

Only emergency radio transmission should be made during rapid refueling.

In case of aircraft fire, observe fire emergency procedures in Chapter 9, TM 55-1520-228-10 . Do not attempt to fly the helicopter.

(1) Minimum crew will remain at the controls.

(2) Throttle - Idle.

(3) Force Trim - ON or controls frictioned.

(4) Passengers shall depart the aircraft and go to the terminal or passenger marshalling area.

(5) No smoking allowed during refueling operations.

(6) A crewmember, if available, should observe the refueling operation (performed by authorized refueling personnel) and stand fire guard as required.

d. During Rapid (Hot) Refueling.

(1) Closed circuit refueling.

(a) Ground the helicopter at the receptacle, located adjacent to the filler cap on the helicopter, to the filler-nozzle and remove filler cap.

(b) Ensure that gravity refueling port is closed. If not, rotate inner sleeve counterclockwise until gravity refueling port is closed and flange of sleeve is in contact with rivet at base of receiver cylinder. Refer to figure 1-3.

CAUTION

Ensure that servicing unit pressure is not above 126 psi while refueling.

(c) Insert fueling nozzle into receiver and actuate automatic nozzle lever to ON or FLOW position. Pin at base of nozzle will momentarily indicate when fuel flow stops.

(d) Fuel flow will automatically shut off when normal fuel level is reached. Just prior to normal shut off, fuel flow may cycle several times as fuel level is reached. Gage on servicing unit will indicate when flow is stopped.

(e) When fuel flow has stopped, actuate lever on nozzle to OFF, disconnect nozzle from receiver and replace filler cap.

(f) Disconnect fuel nozzle ground and rewind hose assembly.

(g) Disconnect servicing unit ground at helicopter.

(h) Disconnect servicing unit ground at grounding stake.

CAUTION

If helicopter is equipped with closed circuit refueling system and fuel servicing unit is not equipped with related nozzle for closed circuit refueling, a gravity system may be used providing the servicing nozzle does not exceed 1.75 inches outside diameter. To refuel utilizing the gravity nozzle, it is necessary to position the inner sleeve of receiver until slot is lined up with fuel port in bottom of receiver. Position nozzle into port in order to bypass closed circuit valve. Damage could result to the closed circuit refueling system if caution is not used in positioning nozzle in its inner sleeve of fuel receiver at fuel port.

(2) Gravity refueling.

(a) Ground the helicopter at the receptacle, located adjacent to the filler cap on the helicopter, to the filler-nozzle and remove filler cap.

(b) Rotate inner sleeve clockwise until sleeve clears port in bottom of fuel receiver. Refer to figure 1-3.

(c) Position nozzle into port of fuel receiver.

(d) Fill to specified level.

(e) Remove nozzle and rotate inner sleeve counterclockwise until gravity refueling port is closed and flange of inner sleeve is in contact with rivet at base of receiver cylinder.

(f) Reinstall filler cap.

(g) Disconnect fuel nozzle ground and rewind hose.

(h) Disconnect servicing unit ground at helicopter.

(i) Disconnect servicing unit ground at grounding stake.

e. After Rapid Refueling.

(1) The pilot shall be advised by the refueling crew that fuel cap(s) are secure and ground cables have been removed.

(2) Crewmembers and passengers can enter aircraft.

1-7. DEFUELING AND DRAIN VALVES.

a. Remove fuel cap; rotate inner sleeve clockwise until end of sleeve clears port in bottom of fuel receiver.

b. Insert a suction pickup from a defuel unit into the fuel filler opening and remove all possible fuel.

c. To complete defueling, drain remaining fuel into a suitable container by opening fuel cell sump drain valve (9, figure).

d. Purge fuel cell. Refer to TM 1-1500-204-23.

1-8. SERVICING - ENGINE OIL SYSTEM. The engine oil tank (6, figure) is located aft of the engine and oil cooler blower fan. Oil level is checked by a "trapped ball" sight gage on the tank. Normal capacity is 11.2 pints. Service with lubricating oil (C103). Tank drain valve is accessible through small door on the left side of aft cowl and has an overboard drain line. Clean oil filter at each oil change. Refer to TM 55-2840-241-23.

CAUTION

An engine high oil level coupled with a transmission low oil level condition indicates a possible failure of the engine gearbox seal(s) which allows oil to be transmitted from the transmission through the freewheeling unit into the engine.

NOTE

The oil systems in the helicopter are the engine oil system, the transmission oil system, the tail rotor gearbox oil system, and the main rotor hub oil system. The engine oil systems are serviced with either MIL-L-7808 or MIL-L-23699, depending on the anticipated temperature range in which the helicopter will be operated. (Refer to TB 55-9150-200-24.) Do not mix MIL-L-7808 and MIL-L-23699 except in an emergency. If oils are mixed, drain oil and service with correct oil within six hours of operation.

a. To prime the pumps, perform the following steps:

NOTE

For additional information on pump priming refer to TM 55-2840-241-23.

(1) Disconnect the engine oil pump inlet hose assembly (figure 1-4) from the elbow fitting.

(2) Loosen the elbow locknut and rotate the elbow to an upright position.

(3) Fill the elbow to spillover with engine oil (C103).

(4) Fill engine inlet hose with engine oil (C103).

(5) Reposition elbow and connect the engine oil pump inlet hose assembly and tighten appropriate components.

1-9. SERVICING - OIL LUBRICATED MAIN ROTOR HUB. Service two pillow block reservoirs (4, figure) and two grip reservoirs (3) with lubricating oil (C102). Fill to one-half full level. Lockwire (C96) filler plugs after servicing.

CAUTION

Do not overservice transmission system. To do so will cause damage to the main rotor mast seal and other transmission seals.

NOTE

For lubrication requirements for the grease lubricated main rotor hub refer to figure 1-5, detail C.

1-10. SERVICING - TRANSMISSION OIL SYSTEM.

NOTE

If MIL-L-7808 and MIL-L-23699 or DOD-L-85734 were mixed in the transmission, drain the transmission and freewheeling unit. Replace the oil filter and service with correct oil. DOD-L-85734 is the preferred oil to use.

Service the transmission (1, figure) with lubricating oil (C103 or C103.1). The normal capacity is 4.0 US quarts. A sight glass located on the transmission housing is used to check the oil level in the transmission. The oil level must be visible in sight glass. If oil is visible, additional oil is not required. If oil is not visible in sight glass, add oil to the center dot only. Transmission is drained by removing the forward chip detector and plug assembly, allowing oil to drain into a trough and into a container; by opening freewheeling unit oil lines at firewall and catching oil in a container, or by using ground drain unit (S4) to avoid spilling oil onto the airframe. To utilize drain fitting, remove chip detector and insert ground drain unit into transmission. After oil has been drained, remove magnetic chip detector from freewheeling unit and drain oil.

1-11. SERVICING - TAIL ROTOR GEARBOX. Service the gearbox (5, figure) with lubricating oil (C103 or C103.1) at the filler-breather cap. The normal capacity is 0.375 US pint (6 oz) A sight glass is provided for ease in checking oil level.

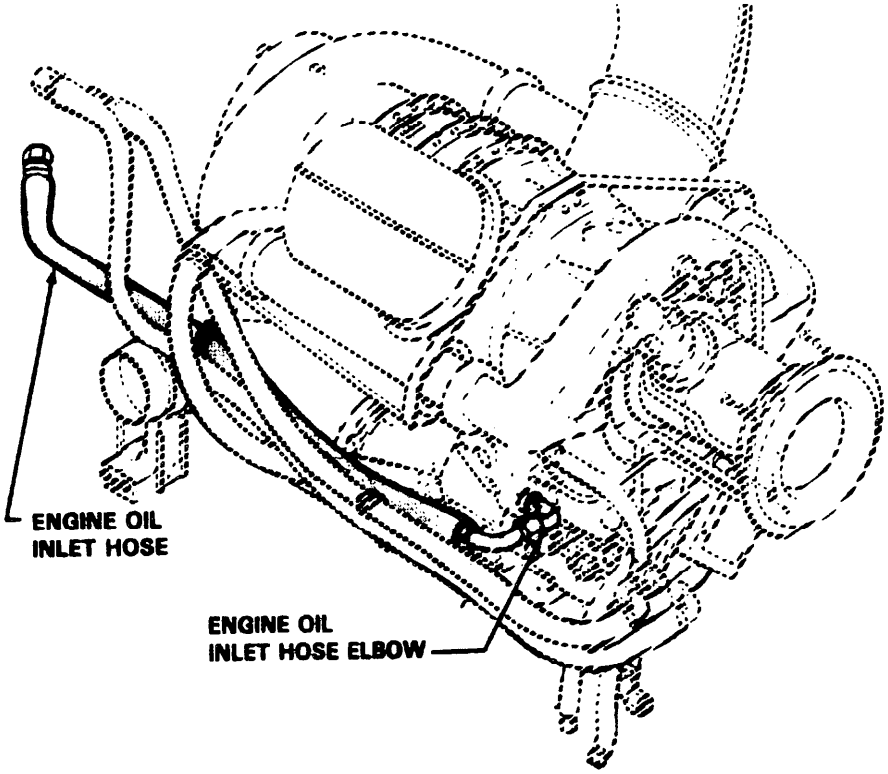

Figure 1-4. Engine Oil Inlet Hose and Elbow

CAUTION

Deleted.

NOTE

When properly serviced, the oil level will be 1/8 inch above the oil level line with standard gear, and to the oil level line when high gear or floats are installed. Drain oil by removing chip detector. Catch oil in a suitable container or by using ground drain unit (S5) to avoid spilling oil onto the airframe. To utilize drain fitting, remove chip detector and insert drain fitting into the gearbox

NOTE

Care should be taken to not overfill gearbox as excessive oil leakage may occur. When servicing, allow oil level to stabilize for correct indication on sight glass.

1-12. SERVICING — HYDRAULIC SYSTEM. Service the hydraulic reservoir (7, figure) with hydraulic fluid (C73). The reservoir is located on the forward side of the transmission. A sight glass with ball float or line level is provided to determine low quantity of fluid in the reservoir. Fill to overflow lip in reservoir. Whenever the fluid in the reservoir is changed, inspect inside of bottom of reservoir for corrosion. Refer to paragraph 7-56.

WARNING

Contact with liquid or mist can irritate eyes and skin. After any contact with skin, immediately wash contacted area with soap and water. If liquid contacts eyes, flush immediately with clear water. If liquid is swallowed, do not induce vomiting; get immediate medical attention. Wear rubber gloves when handling liquid. If prolonged contact with mist is likely, wear appropriate respirator. When fluid is decomposed by heating, toxic gases are released.

1-13. SERVICING — BATTERY. Remove the battery from the helicopter for servicing in accordance with procedures

in TM 11-6140-203-14-2, Chapter 4. Refer to paragraph 8-29 for battery removal procedures.

1-14. SERVICING — TIRES. The ground handling truck assembly tires are inflated to 90 psi.

Deleted

1-15. CLEANING HELICOPTER.

1-16. DESCRIPTION — CLEANING. Cleaning the helicopter is important because residues from exhaust gases, dirt, and contamination of any kind will accelerate corrosion, whether coated with preservative compound or not. Helicopter must be electrically grounded prior to any cleaning, maintenance, disassembly, or preservation. Refer to TM 55-1500-344-23.

WARNING

Degreasing Solvent is combustible and toxic to eyes, skin, and respiratory tract. Wear protective gloves and goggles/face shield. Avoid repeated or prolonged contact. Use only in well-ventilated areas (or use approved respirator as determined by local safety/industrial hygiene personnel). Keep away from open flames or other sources of ignition.

NOTE

Additional cleaning procedures are covered in this manual under individual components.

1-17. INTERIOR — CLEANING. Clean the interior of the helicopter to prevent debris from falling into the operating mechanism. To clean the upholstery, use dishwashing compound (C61) and water. To remove oil or grease spots, use degreasing solvent (C62), then wipe dry with a clean cloth. Clean the interior of the helicopter thoroughly with a vacuum cleaner.

CAUTION

Do not use steam or high pressure water hose to clean helicopter. Do not spray water or solvents directly on isolation mount.

1-18. EXTERIOR — CLEANING. Clean the exterior structure in accordance with TM 1-1500-344-23.

CAUTION

To prevent discoloration, streaking and other damage by inadvertently splashing cleaning solution on plexiglass, rinse off the area thoroughly with clear water before the surface dries.

a. Steam cleaning of the helicopter is prohibited.

b. Low-pressure water, no warmer than 150°F (65°C) may be used providing the following conditions and precautions are observed:

(1) A spray head must be used.

(2) Spray head must be held at a sufficient distance to ensure that the low water pressure does not damage the following;

(a) Edge of bonded panels.

(b) Electrical components.

(c) Bearings.

(d) Seals.

(e) Oil cooler core and air ducts.

c. Preparation of aircraft for washing:

(1) Cover open pitot static ports with tape.

(2) Install pitot tube cover.

1-19. SNOW AND ICE REMOVAL. Snow and ice accumulation may be removed from the airframe and rotor blades using de-icing fluid (C58) in accordance with procedures in TM 1-1500-344-23. Refer to TM 1-1500-204-23.

1-20. PLEXIGLASS - CLEANING. Observe the following cleaning practices:

a. Clean all transparent plastics with large quantities of dishwashing compound (C61) and water.

b. Gently free all mud or dirt with fingers. Do not use sponges or coarse cloths. Rinse the area with low-pressure water while removing the mud.

CAUTION

Do not use Aliphatic Naphtha TT-N-95, Type I.

Do not use compounds containing any abrasive material or solutions containing chlorinated hydrocarbons. Avoid excessive scrubbing of plastic panels during washing operation.

WARNING

Aliphatic Naphtha is flammable and toxic to eyes, skin, and respiratory tract. Wear protective gloves and goggles/face shield. Avoid repeated or prolonged contact. Use only in well-ventilated areas (or use approved respirator as determined by local safety/industrial hygiene personnel). Keep away from open flames, sparks or other sources of ignition.

c. Remove grease or oil with Aliphatic Naphtha, Type II (C22).

d. Allow surfaces to drip dry.

e. To remove or reduce minor scratches apply polishing compound (C113) to affected surfaces.

1-21. ACRYLIC - CLEANING. Acrylic panels on the helicopter are cleaned with large quantities of cleaning compound (C43) and water. Refer to TM 1-1500-204-23.

CAUTION

Do not use compounds other than those specified. Avoid excessive scrubbing of acrylics during washing operation.

1-22. ROTOR BLADES - CLEANING. Wash rotor blades with dishwashing compound (C61) and water.

1-23. TREATMENT OF ALUMINUM AND MAGNESIUM ALLOY CORROSION. Aluminum and magnesium alloy corrosion will be treated in accordance with TM 1-1500-204-23. Apply the protective paint finish to the affected area immediately after drying of chemical treatment in accordance with TM 55-1500-345-23.

1-24. PAINTING - TOUCH UP.

Refer to TM 55-1500-345-23 for touch up painting procedures.

1-25. TORQUE PROCEDURES AND REQUIREMENTS.

NOTE

Standard torque to be used if special torque is not specified.

a. Requirements Governing Application of Torque Loads.

CAUTION

Standard torque values for final tightening are shown in parts I and II of table 1-1.

(1) The values in table 1-1 apply to cadmium-plated bolts, cadmium-plated nuts, and nuts coated with molybdenum disulfide.

NOTE

The final torque value for self-locking nuts must be determined by adding the free running torque (torque wrench reading) to the specified torque value. (The free running torque is the torque required to overcome the friction of the nut running down the bolt thread prior to reaching the clamp-up point.)

(2) Lubricant applied by the manufacturer must not be removed nor additional lubricant added unless otherwise specified.

(3) The bolts, nuts, and the surfaces they bear on must be clean, dry, and free of lubricant (except as stated in preceding substep (2)).

(4) The turning (drag) torque required to install a self-locking nut up to the point of final tightening must always be added to the final torque value specified in parts I and II of the table 1-1, or the maintenance instruction. as applicable.

(5) Torques specified in maintenance instructions are special torques that take precedence over those in parts I and II of table 1-1.

(6) Unless otherwise specified, bolts and screws with strength of less than 125,000 psi do not require a mandatory torque value. The nut and bolt combination will be tightened sufficiently to make a satisfactory joint.

(7) Bolts and screws with strength of 125,000 psi or higher must have torque applied to table 1-1, part I and II values (except as stated in substep (5) above).

Table 1-1. Recommended Standard Nut Torques

Part I. Minimum and Maximum Torques for Tightening Tension-Type Nuts*					
Thread Size	Recommended Torque (in./lb)	Maximum Allowable (in./lb)	Thread Size	Recommended Torque (in./lb)	Maximum Allowable (in./lb)
8-36	12-15	20	8-32	12-15	20
10-32	20-25	40	10-24	20-25	35
1/4-28	50-70	100	1/4-20	40-50	75
5/16-24	100-140	225	5/16-18	80-90	160
3/8-24	160-190	390	3/8-16	160-185	275
7/16-20	450-500	840	7/16-14	235-255	475
1/2-20	480-690	1100	1/2-13	400-480	880
9/16-18	800-1000	1600	9/16-12	500-700	1100
5/8-18	1100-1300	2400	5/8-11	700-900	1500
3/4-16	2300-2500	5000	3/4-10	1150-1600	2500
7/8-14	2500-3000	7000	7/8-9	2200-3000	4600
1-14	3700-5500	10000	1-8	3700-5000	7600
1-1/8-12	5000-7000	15000	1-1/8-8	5500-6500	12000
1-1/4-12	9000-11000	25000	1-1/4-8	6500-8000	16000
* AN 310, AN365, MS 20365, MS 21042, NAS 1021, NAS 1291, NAS 679					
Part II. Minimum and Maximum Torques for Tightening Shear-Type Nuts*					
8-36	7-9	12	8-32	7-9	12
10-32	12-15	25	10-24	12-15	21
1/4-28	30-40	60	1/4-20	25-30	45
5/16-24	60-85	140	5/16-18	48-55	180
3/8-24	95-110	240	3/8-16	95-110	170
7/16-20	270-300	500	7/16-14	150-166	280
1/2-20	290-410	600	1/2-13	240-290	520
9/16-18	480-600	960	9/16-12	300-420	650
5/8-18	660-780	1400	5/8-11	420-540	900
3/4-16	1300-1500	3000	3/4-10	700-950	1500
7/8-14	1500-1800	4200	7/8-9	1300-1800	2700
1-14	2200-3300	6000	1-8	2200-3000	4500
1-1/8-12	3000-4200	9000	1-1/8-8	3300-4000	7200
1-1/4-12	5400-6600	15000	1-1/4-8	4000-5000	10000
* AN 320, AN 364, MS 20364, NAS 1022					

(8) If adapters are used such that the adapter and the torque wrench are not at right (90 degree) angles to each other, the wrench or indicator reading must be corrected. Refer to TM 1-1500-204-23.

(9) The bolt must not be rotated during installation or application or torque to nut.

(10) Checking fasteners accurately to determine if they have been tightened to the specified torque value is not possible. A fastener that has been tightened to a specified torque value requires approximately 10% more torque than was originally applied to overcome friction and start the fastener turning. To ensure proper torque value has been applied, the fastener should be backed off from one-half to one full turn and retightened to the correct torque value. A torque wrench should not be used for the backoff operation.

b. Installation of Castellated Nuts on Nonrotating (Static) Parts. Maximum applied torque must not exceed the applicable values in parts I and II of table 1-1.

c. Installation of Castellated Nuts on Rotating (Dynamic) Parts. When tightening castellated nuts on bolts, it is possible that the cotter pin holes will not line up with the slots in the nuts for the range of recommended installation torques. In such a case, the nut may be tightened to minimum torque and rotated one castellation to line up the nearest slot with the cotter pin hole.

d. Installation of Self-locking Tension and Steel-Type Nuts.

(1) Use torques in part I of table 1-1 for tension-type cadmium-plated steel nuts.

(2) Use torques in part II of table 1-1 for shear-type cadmium-plated steel nuts.

e. Installation of Bolts - General.

(1) If the bolt can be inserted through the material and started into the nut by the fingers, use the applicable torque in parts I and II of table 1-1.

(2) If installing the bolt into a close tolerance hole, or under other conditions that increase the tightening resistance, torque to the high limit of the applicable recommended torque in parts I and II of table 1-1.

f. Installation of Bolts into Threaded Parts.

(1) Use the applicable torque in part I of table 1-1 when installing the bolt into a threaded part if the mating thread length is equal to or greater than one diameter of the bolt.

(2) Use part II of table 1-1 if the mating thread length is less than one diameter of the bolt.

NOTE

The requirements in preceding steps c. and f. also apply to thread inserts.

1-26. RE-USE OF SELF-LOCKING NUTS.

For re-use of self-locking nuts refer to TM 1-1500-204-23

1-27. LIST OF CONSUMABLE MATERIALS.

WARNING

Special attention to label precautionary instructions regarding: product usage, safety, ventilation requirements, and emergency information should be followed before using any consumable supplies.

1-28. DESCRIPTION. Consumable maintenance supplies and materials are listed in table 1-2 in alphabetical order. Each consumable also has an item number assigned for ease of location and reference. When an item number is unknown you may locate any consumables used within this manual through its alphabetical arrangement. When an item number is referenced in the manual, locate the item through its C designator and item number. The C designators are used only with consumable maintenance supplies and materials. Consumable maintenance supplies and materials tables are found only in this chapter; therefore, table number will not be referenced in text. In the event of deletion of a consumable maintenance supplies and materials from the list, item numbers shall remain in proper numerical sequence and the word "deleted" will be placed in the empty space. For those materials that have been replaced or for which alternate materials have been listed, a statement like the following shall be entered: "Replaced, use fibrous cord (C48)".

Table 1-2. Consumable Maintenance Supplies and Materials

The supplies and materials listed in this table are required for maintenance support of this equipment and are authorized to be requisitioned by CTA 50-970.

Item No.	Description	Ref No. and FSCM	NSN
1	Accelerator	81C29 (73842)	Local Purchase
2	Acetone, Technical	ASTM D329(81348)	6810-00-184-4796
3	Acid, Acetic	O-A-76 (81348)	6810-00-275-1215
4	Acid, Boric	O-C-265-(81348)	6810-00-264-6535
5	Adhesive	Eccobond (04552)	8040-00-148-7183
6	Adhesive	EC2216 (94960)	8040-00-145-0019
7	Adhesive	MIL-A-46050 (81349)	8040-00-142-9193
8	Adhesive	MMM-A-121 (81348)	8040-00-165-8614
9	Adhesive	EC-766 (04963)	8040-00-597-9723
10	Adhesive, BHT SPEC 299-947-152 Type I, Class 1	DAPCOTAC 3300 (58093)	8040-01-136-5464
			8040-00-097-6524
11	Adhesive	EA9309.3NA (04347)	8040-01-163-3481
12	Adhesive — Epoxy	MIL-A-14042	8040-00-944-7292
	Metalset A4	(90414)	
	RP1258	(02684)	
	EA9340	(22893)	
	EPI Seal 1010	(19012)	
12.1	Adhesive Repair Kit	S1607-7021 (78286)	1560-00-856-9222
13	Adhesive Film and Primer, Variable Cure System (225° to 280°F)	299-947-121, Type II (97499) (92627)	
14	Adhesive, General Purpose EC1300L	BHT SPEC 299-947-107	8040-00-514-1880
15	Adhesive — Insulation	No. 34 (04963)	Local Purchase
16	Adhesive — Rubber Base	MMM1617B, Type II (81348)	8040-00-664-4318
17	Adhesive (Sealant) EC1675-B2 or Proseal 890-B2	299-947-107, Type III, Class 7 (97499)	8030-00-723-4599
17.1	Adhesive, Urlane (Part A and B) 5738-A/BX	EC3549AB (04963)	8040-01-016-4726

Table 1-2. Consumable Maintenance Supplies and Materials — Continued

Item No.	Description	Ref No. and FSCM	NSN
18	Adhesive, Silicone Rubber, Color Red	RTV-106 (01139)	8040-00-941-9984
18.1	Adhesive, Silicone RTV	MIL-A-46146 (01139)	8040-00-145-0020
19	Adhesive, Two-Part A and B EA934NA	299-947-100, Type II, Class 2 (97499) (04347)	8040-01-102-2098
20	Adhesive (Urethane) (8089)	(01139)	8030-01-145-1768
21	Alcoholic Phosphoric Acid Solution Turco No. 1	(81349)	6850-00-270-5551
22	DELETED		
23	Aluminum Wool	MIL-A-4864 (81349)	5350-00-597-5367
24	DELETED		
24.1	DELETED		
25	Asbestos Style G-89, Type II	TM 89-3-64 (48482)	1560-01-387-5677
26	Barrier Material Grease and Waterproof	MIL-B-131, Class I (81349)	8135-00-282-0565
27	Barrier Material Waterproof Grade A, Class I	MIL-B-121, Type I (81349)	8135-00-224-8885
28	Bottle, Screw Cap. 16 oz	8275G (64484)	6640-00-404-0660
29	Bottle, Screw Cap. 32 oz	8275H (64484)	6640-00-404-0661
30	Brasso		Local Purchase
31	Brush, Stiff Fiber Bristle	HB6 43 TY2 (81349)	7920-00-514-2417
32	Calcium Sulfate		Commercial
33	Cement, Silicone Adhesive	RTV 732 (71984)	8040-00-877-9872
34	Cement, Silicone Adhesive A4000	MIL-A-25447 (71984)	8040-00-057-2324
35	Cement — Type 81057	(73842)	Local Purchase
36	Cement — Type III	MIL-A-5092 (81348)	8040-00-152-0067
37	Cheesecloth	(81348)	8305-00-267-3015
37.1	Cheesecloth	(81348)	8305-00-205-3558
38	Corrosion Resistant Coating	MIL-DTL-81706(81349)	8030-00-065-0957

Table 1-2. Consumable Maintenance Supplies and Materials — Continued

Item No.	Description	Ref No. and FSCM	NSN
39	Chromic Acid - 5% Solution	A-A-55827	6810-00-174-1818
40	Chromic Pickle-Brush Solution Type VI	Dow No. 19 (96717)	8030-00-764-6176
41	Cleaning Compound	MIL-C-0043616CL2 (81349)	6850-01-045-7929
42	Cleaning Compound, Aircraft Surface, Alkaline Base	MIL-C-87937	6850-00-935-0995
43	Cleaning Compound, Aircraft Surface, Alkaline, Waterbase	MIL-C-87937	6850-00-935-0995
44	DELETED		
45	Cloth, Abrasive, Aluminum Oxide	PC 451, Type I (81348)	5350-00-246-0330
45.1	Cloth, Cleaning, Low-Lint	MIL-C-85043, Type II (81349)	7920-00-044-9281
46	Cloth, Fiberglass, 120 or 127 Weave Volan, a finish	MIL-C-9084 (81349)	8305-00-082-6135
47	Compound, Lacquer	Torque Seal Green (01195)	8030-01-573-2917
48	Cord, Fibrous	MIL-C-5040 (81349)	4020-00-246-0688
49	Cord, Fibrous	MIL-C-5040 (81349)	4020-00-240-2154
50	Corrosion Preventive Compound	MIL-PRF-16173, Grade I (81349)	8030-00-231-2345
51	Corrosion Preventive Compound	MIL-PRF-16173, Grade 2 (81349)	8030-00-244-1297
52	Corrosion Preventive Compound	MIL-C-15074 (81349)	8030-00-664-4017
53	Corrosion Preventive Compound	MIL-C-81309, Class 3 (81340)	8030-00-231-2353
53.1	Corrosion Preventive Compound	MIL-C-23411 (81349)	8030-00-835-4348
54	Hurrisafe 8065 Aircraft Cleaner		6850-01-434-6553
55	Crocus Cloth	PC-458 (81348)	5350-00-221-0872
56	Cushioning Material, Cellulosic	PPP-C-843, Type II (81348)	8135-00-664-6958
57	Dampening Fluid	W-D-1078 (81348)	9150-00-024-9623

Table 1-2. Consumable Maintenance Supplies and Materials — Continued

Item No.	Description	Ref No. and FSCM	NSN
58	De-Icing Fluid	SAE-AMS 1424	6850-00-901-0591
59	Denatured Alcohol	O-E-760 (81349)	6810-00-201-0907
60	Desiccant, Activated	MIL-D-3464 (81349)	6850-00-264-6573
61	Dishwashing Compound	P-D-410 (81348)	7980-00-880-4454
62	Degreasing Solvent	MIL-PRF-680, Type II	6850-00-474–2319
63	Ethylene Glycol, Mono Butyl Ether	TT-E-776 (81348)	6810-00-281-2001
64	Enamel, Staking, Glyptol	MIL-E-22118A (81349)	8010-00-823-8046
65	End Dip Compound	AE13702-003	
66	Epoxy, Epon 828	(36131)	8040-00-952-5713
67	Aerospace Equipment Cleaning Compound	MIL-PRF-87397	6850–01–390–7827
68	Aerospace Equipment Cleaning Compound	MIL-PRF-87397	6850-01-429-2368
69	Fairing Compound	RP1257-3A (02684)	8030-00-891-3113
70	Fastener Tape (Pile)	MIL-F-21840 (81349)	8315-00-926-4930
71	Fiberglass Cloth Fingerprint Remover, Corrosion Preventive	SAE-AMS-C-9084	8305-00-530-0109
72	Fingerprint Remover, Corrosion Preventive	MIL-C-15074 (81349)	8030-00-664-4017
73	Fluid, Hydraulic, (Refer to TB 55-1500-334-24)	MIL-H-5606 (81349)	9150-00-252-6383
		MIL-H-83282 (81349)	9150-00-149-7431
74	Aircraft Exterior Cleaning Compound	MIL-PRF-85570	6850-01-500-8919
75	Fuel, Jet, JP-8	MIL-T-83133 (81349)	9130-00-256-8617
76	Gloves, White, Cotton	MIL-G-3866 (81349)	8415-00-268-8353
77	Grease, Aircraft	MIL-PRF-81322F (81349)	9150-01-262-3358
78	Grease, Aircraft	MIL-G-23827 (81349)	9150-00-985-7246
79	Grease, Aircraft Driveshaft Coupling	204-040-755-5 (97499)	9150-00-506-8497

Table 1-2. Consumable Maintenance Supplies and Materials — Continued

Item No.	Description	Ref No. and FSCM	NSN
80	Grease, Helicopter, Oscillating Bearing	MIL-G-25537 (81349)	9150-00-478-0055
81	Grease, Silicone Grease,	MIL-L-15719 (81349)	9150-00-257-5358
81.1	DELETED		
82	DELETED		
83	Ignition Sealing Compound, DC-4	MIL-S-8660 (81349)	6850-00-880-7616
84	India Stone, Fine	SS-S-736A (81348)	5345-00-260-0759
85	Ink, Marking Stencil (White)	TT-1-1795 (81348)	7510-00-224-6732
86	Insulation Sheet, Electrical	MIL-P-15037 (81347)	5970-00-118-8838
87	Jet Engine Lubrication Oil (Grade 1010)	MIL-L-6081 (81349)	9150-00-273-2388
88	Lacquer, Acrylic, Olive Drab	MIL-PRF-81352 (81349)	8010-00-144-9998
89	Lacquer, Acrylic, Low-Reflective, Type I, Black	MIL-DTL-53039 (81349)	8010-01-229-7540
90	Lacquer, Acrylic, Clear	TT-L-50	8010-00-515-2487
91	Lacquer, Acrylic, Gloss Gull Gray No. 36440, P-95	MIL-L-81352 (81349)	8010-00-935-7060
92	Lacquer, Acrylic, Gloss Red No. 11136	MIL-PRF-81352 (81349)	8010-00-935-7063
93	Lacquer, Acrylic, Glossy White No. 17875	MIL-L-81352 (81348)	8010-00-935-6608
93.1	Lens Cleaning Tissue	M42215AJ (97942)	6640-00-559-1384
94	LHE Cadmium Solution (Brush On) Macro Bronze No. 1 Enthox 982		
95	Lockwire, Steel, 0.020 Dia, Corrosion Resistant	539798 (73471)	9505-00-596-5101

Table 1-2. Consumable Maintenance Supplies and Materials — Continued

Item No.	Description	Ref No. and FSCM	NSN
96	Lockwire, Steel, 0.032 Dia, Corrosion Resistant	MS20995C32 (96906)	9505-00-293-4208
97	Lockwire, Steel, 0.041 Dia, Corrosion Resistant	MS20995C41 (96906)	9505-00-331-3275
98	Lockwire, Copper, 0.020	MS20995CY20 (96906)	9525-01-047-6455
99	Lubricant, Dry, Molybdenum Disulphide	SAE-AMS-M-7866 (81349)	6810-00-264-6715
100	Lubricant, Solid Film Air Drying, Corrosion Inhibiting	MIL-L-46147A	9150-00-142-9361
101	Lubricating Oil	W-L-825 (83148)	9150-00-598-2911
102	Lubricating Oil (Grade 30)	MIL-L-2104 (83149)	9150-00-186-6681
103	Lubricating Oil, Synthetic Base, Turbine Engine	MIL-L-23699 or MIL-L-7808 (81349)	9150-00-180-6266 9150-00-782-2627
103.1	Lubricating Oil (Primary)	DOD-L-85734	9150-01-209-2684
104	Lubricant, Silicone	MIL-S-8660 (81349)	6850-00-880-7616
105	Lubricant, Solid Film	MIL-PRF-46010 (81349)	9150-00-948-6912
106	Lubricant, Surgical (KY Jelly)		6505-00-153-8809
107	DELETED		
107.1	Molding Plastic	Nopcofoam G506 (87570)	9330-01-006-5310
108	Needle, 18 Gage	MIL-N-36124 (81349)	6515-00-754-2834
108.1	Nonslip Walking Compound	MIL-W-5044 Type II	5610-00-641-0426
108.2	DELETED		
109	Pad, Scouring	LP50, Type II	7920-00-753-5242
110	Paint Remove, Alkaline Type, General	MIL-R-81294A (Equivalent MIL-R-8633A)	8010-00-926-1488
111	Petrolatum (Technical Vaseline)	W-P-236 (81348)	9150-00-250-0926
112	Plastic, Strip, Pressure Sensitive	SJ8561 (76381)	9330-00-169-6407
113	Polishing Compound (Transparent Plastic)	RS-69 (32834)	1560-00-450-3622

Table 1-2. Consumable Maintenance Supplies and Materials — Continued

Item No.	Description	Ref No. and FSCM	NSN
114	Primer, Adhesive	LOCQUIC Primer, Grade N (05972)	8030-01–388–5606
115	Primer, Sealing Compound (use with item 120)	LOCQUIC Primer, Grade T (05972)	8030-01–388–5604
116	Primer, Epoxy Polyamide (Yellow)	MIL-PRF-23377 (81349)	8010-00-082-2450
116.1	Primer, Epoxy Polyamide (Green)	MIL-PRF-23377, Type II (81349)	8010-01-266-5677
117	Primer, Lacquer Type	MIL-P-7962 (81349)	8010-00-584-2426
118	Primer, Zinc Chromate (Low Moisture Sensitivity)	TT-P-1757 (81348)	8010-00-835-2114
119	Putty, Chromate	MIL-P-8116 (81349)	8030-00-664-4968
119.1	Rag Wiping, Cotton and Cotton Synthetic	A-A-531, Grade B (58536)	7920-01-084-3860
120	Retaining Compound, Sealing, Anaerobic CV 4-10 (use with item 115)	PN 08031, Grade E (05972),	8030-00-081-2328
121	Rod, Welding, Aluminum Type I, Class FS-RA 143	QQ-R-566 (81348)	3439-00-268-9654
122	Rod, Welding, Steel, Type 347, Class 5	MIL-R-5031 (81349)	3439-00-528-1490
123	Sandpaper, 80 Grit	P-P-101 (81348)	5350-00-619-9167
124	Sandpaper, 180 Grit	P-P-101 (81348)	5350-00-721-8117
125	Sandpaper, 320 Grit	P-P-101 (81348)	5350-00-224-7203
126	Sandpaper, 400 Grit	P-P-101 (81348)	5350-00-224-7201
127	Sandpaper, 600 Grit	P-P-101 (81348)	5350-01-060-8212
128	Sealant, Epoxy Resin	EPK1C (04347)	8040-00-777-0631
129	Sealant, Proseal 706	MIL-S-8784 (81349)	8030-00-616-9191
130	Sealing Compound	PR-1826 B-2 (83574)	8030-01-290-5138
131	Sealing Compound	PR-1826 B-2 (83574)	8030-01-290-5139
131.1	Sealant, Proseal 606C-2	MIL-S-8784CLB-2 (81349)	8030-00-680-2041

Table 1-2. Consumable Maintenance Supplies and Materials — Continued

Item No.	Description	Ref No. and FSCM	NSN
132	Sealing Compound, F900 Torque Seal	(01195)	8030-01-573-2921
132.1	Soap, Toilet, Cake	P-S-620 (81348)	8520-00-531-6484
133	Solder, Tin Alloy	QQS-571 (81348)	3439-00-224-3567
134	Syringe, Hypodermic	MIL-S-36157 (81349)	6515-00-754-0412
135	Talcum Powder	U-T-30A (81348)	8510-00-817-0295
136	Tape, Adhesive Pressure (Type II)	PPP-T-60 (81348)	7510-00-663-3732
137	Tape, Electrical	MIL-I-15126 (81349)	5970-00-959-0012
138	Tape, Dissimilar Metal Separation	MIL-T-23142 (81349)	7510-00-472-4021

Consumable Maintenance Supplies and Materials – Continued

Item No.	Description	Ref No. and FSCM	NSN
139	Tape, Doubleface (Scotch No. 666 3M Corp)	UUT91 (81348)	7510-00-634-1549
140	Tape Fastener, Hook	MIL-F-21840 (81349)	8315-00-926-4931
141	Tape Fastener, Pile	MIL-F-21840 (81349)	8315-00-926-4930
142	Tape, Instrument Marking	L-T-90, Type I, Class B	
		Yellow	7510-00-550-7125
		Red	7510-00-550-7126
		Green	7510-00-550-7129
143	Tape, Masking	A-A-883	7510-00-283-0612
144	Tape, Teflon, Self-Adhesive	5490 (76381)	8135-00-923-0591
145	Tedlar	FED SPEC L-P-104B (81348)	
146	Thermomelt (188)	(94858)	6685-00-938-0435
147	Thinner (for Acrylic Nitrocellulose Lacquer)	MIL-T-19544 (81349)	8010-00-527-2897
148	Thinner	MIL-T-81722	8010-01-200-2637
149	Thread, Nylon, 1616 Test	VT-295 (81348)	8310-00-227-1244
150	Isopropyl, Alcohol	TT-I-735 (81349)	6505-00-205-6513
151	DELETED		
152	Urethane	MIL-P-26514 (81349)	8135-00-181-7456
153	Varnish, Alkali-Resistant	TT-V-119 (81348)	8010-00-597-7856
154	Webb, Nylon Abrasive Pad, Type A (Scotchbrite)	MIL-A-9962A, Type I, Class 1 (76381)	5350-00-967-5092
155	Wool, Steel	FF-S-740, Type I, Class 0 (81348)	5350-00-242-4405
156	Paint, Top Coating, Silver, Sermetel	(78710)	8010-00-111-6384
157	Polyamide Epoxy Primer	MIL-PRF-23377 (81349)	8010-00-082-2450
158	Grease	130A (73219)	9150-00-754-0063
159	Adhesive	RTV732	8040-00-833-9563
160	Plastic Sheet	L-C-110	8135-00-582-5170
161	Sealant	RTV 128	8040-01-252-8567
162	Tape, Adhesive Pressure	7455 (88301)	7510-00-180-6288
163	Shellac	TT-S-300 (81348)	8010-01-070-4549
164	Rubber Sheet, Solid	MIL-R-6855, Class 2, Type A, Grade 40	9320-00-756-2460

1-29. SPECIAL TOOLS AND TEST EQUIPMENT.

1-30. DESCRIPTION. Special tools and test equipment are listed in table 1-3 in alphanumeric order. Each tool or piece of test equipment has an item number assigned for ease of location and reference. When an item number is unknown, you may locate special tools and test equipment through alphanumeric arrangement within the table. When an item is referenced in the manual, you may locate the item through a T-designator and item number. T-designators are used only with special tools and test equipment. The special tools and test equipment table is found only within this chapter; therefore, the table number will not be referenced within the text. A complete listing of all special tools and test equipment authorized for use to perform maintenance on the helicopter accessories are contained in the helicopter parts manual. The following usability codes apply to table 1-3.

USABILITY CODES

R — Removal
D — Disassembly
I — Inspection
RP — Repair/Replace
T — Testing
A — Assembly
IN — Installation
AD — Adjustment
S/P — Storage/Preservation

Table 1-3. Special Tools and Test Equipment

Item No.	Part Number	Nomenclature	Usability Code	Figure Reference
1	B-4951	Kit, Balancing - VIBREX	T	
2	BH112JA-36	Tester, Exhaust Gas Temp		
3	BH112JB-53	Tester Exhaust Gas Temp T.		
4	FRES 10	Adapter, Torque	IN	
5	MIL-I-18997/1	Gauge, Pressure (0-1000 PSI)	I	
6	MPI	Gage, Pressure (0-100 PSI)	T	
7	PD1201	Power Wrench	R/IN	
8	PD2733	Adapter, Mast Nut	R/IN	
9	PD2734	Socket, Mast Nut	R/IN	
10	T100061	Tool, Float Inflation	A/IN	
11	T100089	Adapter, Aircraft Hoisting	R/IN	
12	T100220	Sling, Main Rotor	R/IN	
13	T101401	Scope Assembly	AD	
14	T101444	Tool, Tab Bending	AD	
15	T101445	Gage, Tab	AD	

Table 1-3. Special Tools and Test Equipment — Continued

Item No.	Part Number	Nomenclature	Usability Code	Figure Reference
16	T101491	Puller, Bearing	R	
17	T101499	Fixture, Holding	D/A	
18	T101503	Tool, Bearing	R/IN	
19	T101511	Wrench, Spline	R/IN/D	
20	T101529-3	Tool, Staking	RP	
21	T101529-5	Assembly, Base	D/A	
22	T101529-7	Assembly, Housing	D/A	
23	T101529-23	Punch and Set	D	
24	T101529-25	Pilot	D	
25	T101529-27	Support	RP	
26	T101529-29	Shims	IN/AD	
27	T101530	Tool, Roll Staking	RP	
28	T101532	Support Assembly	AD	
29	T101536	Assembly, Target	AD/T	
30	T101547	Tool, Staking	RP	
31	T101554	Wrench, Socket	D/A	
32	T101555	Tool, Holding	R/IN	
	5120-EG-009	Tool, Holding	R/IN (Alternative)	
33	T101584	Tool, Roll Staking	A/RP	
34	T101740	Tool, Rigging	AD	11-15
35	T101741	Tool, Flapping Axis	AD	11-15
36	T102040	Wrench	R/IN/D	
37	T102103	Dehydrator	S/P	
38	1560-OH58-105-1	Tool	RP	D-157
39	2539	Post Assembly	AD	

Table 1-3. Special Tools and Test Equipment — Continued

Item No.	Part Number	Nomenclature	Usability Code	Figure Reference
40	6796963	Tool, Engine Lifting	R/IN	
41	7A050	Kit, Propeller Balancing	AD	
42	7HEL069	Balancing Kit, Main and Tail Rotor	AD	
43	810550	Level, Bull's Eye	AD	
44	847A	Puller, Battery Terminal	D	
45	946-29760	Test Fixture	T	
46	951	Bearing Puller Attachment	R	
47	96369	0.006 Wire Gage	I	
48	Deleted			
49	Deleted			
50	Deleted			
51	Deleted			
52	Deleted			
53	TTU-27/E	Tester Tachometer	AD/T	
54	BH22167	Temp Indicator Check Adapter		
55	BH22196	RPM Check Adapter		
56	BH22168	Temp Trim Adapter		
57	1ABB03320AGA	Gauge, Pressure (0-30 PSI)	I	

1-31. SUPPORT EQUIPMENT.

1-32. DESCRIPTION. Support equipment required for maintenance performance on the helicopter is listed in alphanumeric sequence in table 1-4. Each item is assigned a number for ease of location and reference. The S designator and item number is referenced in the text where the equipment is used. The table number will not be referenced since the support equipment table is found only within this chapter. Items not listed within this table may be found in TM 55-1520-228-23P.

Table 1-4. Support Equipment

ITEM NO.	PART NO.	NOMENCLATURE
1	AA173-1251	Tow Bar
2	AA1730-1301-8	Rod Anchor
3	D-5A	Test Stand - Hydraulic
4	DB3188L	Drain Unit - Transmission
5	DB3225L	Drain Unit - Tail Rotor Gearbox
6	Delete	
7	Delete	
8	Delete	
9	Delete	
10	Delete	
11	206-070-472-11	Cover and Shield
12	214-782-001	Maintenance Hoise
13	369A9905	Truck, Ground Handling
14	53D22020	Jack, Helicopter - 5-ton
15	585819	Tiedown Strap
16	* Make Item	Hoisting Adapter
* (Reference TM 55-1500-338-S, Pages 3-2 and 3-3.)		

SECTION II. LUBRICATION

1-33. LUBRICATION REQUIREMENTS.

1-34. DESCRIPTION — LUBRICATION REQUIREMENTS. The lubrication chart (figure 1-5) consists of a perspective diagram of the helicopter, indicating parts requiring periodic lubrication.

The lubrication chart uses symbols and abbreviations to indicate the required lubricant, method of application, and time interval for lubrication of each part listed. A key on the chart defines the meanings of symbols and abbreviations. Refer to figure for servicing of engine, transmission, and tail rotor gearboxes which are lubricated by oil.

SECTION III HANDLING, JACKING, MOORING, HOISTING, AND SLING LOADING

1-35. GROUND HANDLING.

1-36. DESCRIPTION. The ground handling requirements in extreme environmental conditions (heat, cold, dust, high humidity, etc.) consists essentially of procedures followed during normal conditions with added emphasis on the following:

a. Wet weather and high humidity conditions create corrosion, rot, mildew, and mold. Keep helicopter as clean and dry as possible to prevent deterioration.

b. Check frequently to ensure drain valves are open and free of blockage.

c. Ensure fuel tanks are full to prevent internal condensation during cold weather.

d. Ensure protective covers are installed and secured.

e. If space is available, park helicopter in hangar or shed.

f. The following paragraphs contain information necessary for hoisting, jacking, leveling, mooring, parking, towing, and other ground handling operations for the helicopter.

CAUTION

Ensure that main rotor tiedown (6, .gure 1-6) is installed prior to any ground handling.

Do not move helicopter with pilot or copilot windshield removed.

Airframe structure damage can occur if stress panels are not in place before jacking or hoisting. Ensure all stress panels are installed.

1-37. TOWING.

CAUTION

Do not move helicopter for 25 minutes after power has been removed from the AN/ASN-43 compass to preclude damage to the compass. However, if the helicopter must be moved before 25 minutes has elapsed, apply power to the compass and allow a 5-minute warmup time. The helicopter may then be moved without damage to the gyro with power applied.

CAUTION

Install ground handling trucks (S13) in accordance with detail instructions given in Chapter 3. Use ground handling extension lever only for raising helicopter after installation of truck assemblies. Never ground handle helicopter by the vertical stabilizer, nor step on tail skid to raise front of helicopter.

NOTE

Inspect tow .ttings for security prior to attachment of tow bar.

a. Tow fittings (11, figure 1-6) are provided on forward inboard portion of each landing gear skid for

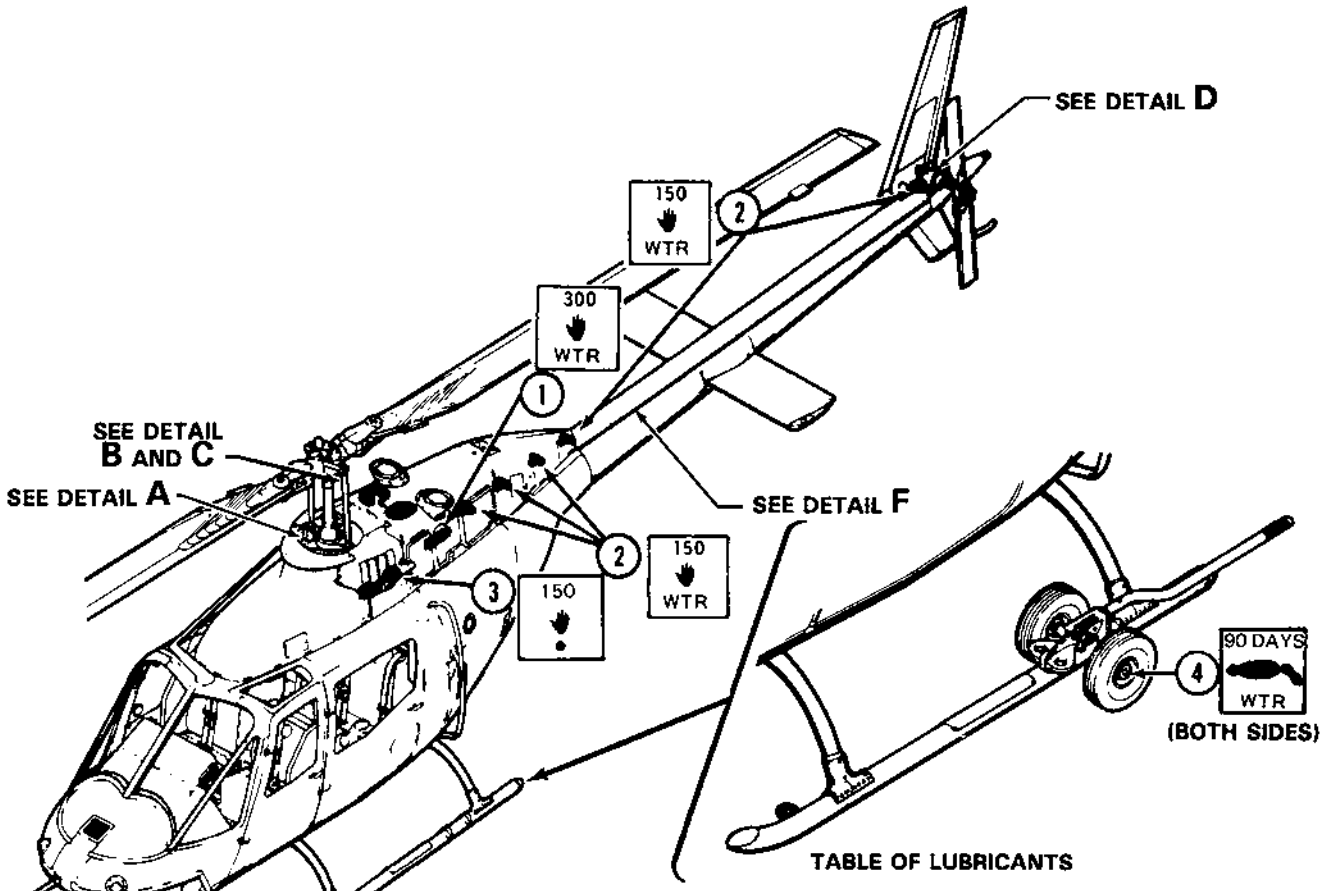

TABLE OF LUBRICANTS

SYMBOL	SPECIFICATION	TYPE OF LUBRICANT
WTR	MIL-PRF 81322F	Grease, Aircraft (C77)
●	204-040-755-5 or 204-040-755-3	Grease, Aircraft (C79)
	Grease Gun	
	Syringe	
	Hand	
25	25 ± 2.5 Hour Interval	
50	50 ± 5 Hour Interval	
100	100 ± 10 Hour Interval	
150	150 ± 15 Hour Interval	
300	300 ± 30 Hour Interval	
90 DAYS	90 Day Interval	

206900-540-1

NOTE

Lubrication to be performed at each indicated inteval or every 6 months, whichever occurs first, for all items on this lubrication chart.

Figure 1-5. Lubrication Chart (Sheet 1 of 6)

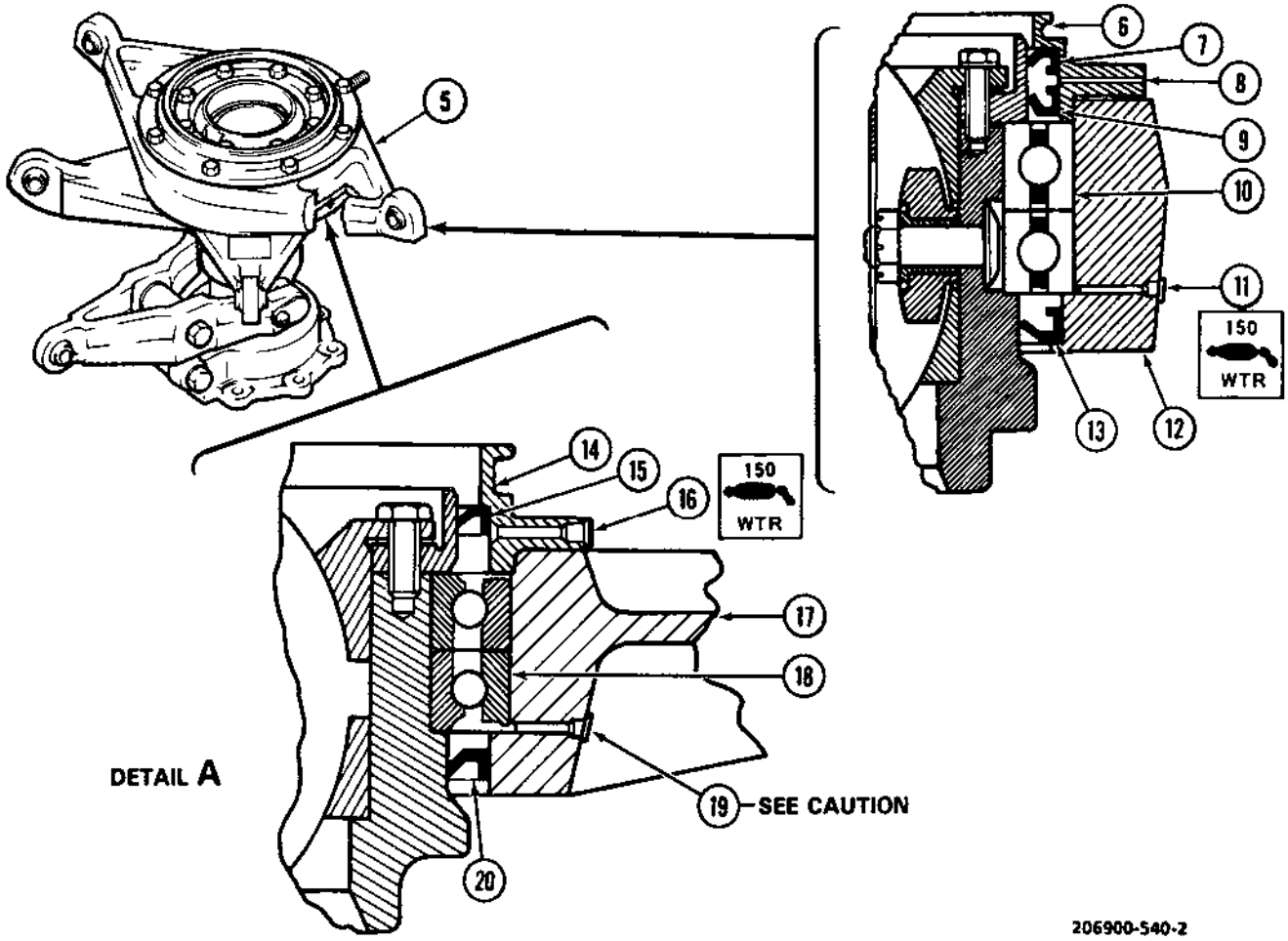

Lubricate swashplate as follows:

a. Inspect swashplate (5) and determine whether there are four holes (8) in the cap, or if there is one lubrication fitting (16) and no holes. If there are four holes (8) make certain they are open and unobstructed.

b. If there are four holes (8), apply lubricant at lubrication fitting (11) until lubricant is purged from one or more holes (8). Rotate outer ring (12) 360 degrees in 90 degree increments. Repeat lubrication at each increment to ensure thorough lubrication of bearings.

c. If there is one lubrication fitting (16), apply lubricant at lubrication fitting (16) until lubricant is purged from lower seal (20). Rotate outer ring (17) 360 degrees in 90 degree increments. Repeat lubrication at each increment to ensure thorough lubrication of bearings. When lubrication fitting (16) is installed, lubrication fitting (19) should be plugged. If lubrication fitting (19) is open, do not use it because lubricant will purge past seal (20) and bearings (18) will not be lubricated.

CAUTION

If both lubrication fittings (16) and (19) are installed or if the assembly does not purge as described, the swashplate may be improperly assembled and the bearings may not be lubricated. Request assistance from AVIM. Reference TB 55-1520-228-20-24.

Figure 1-5. Lubrication Chart (Sheet 2 of 6)

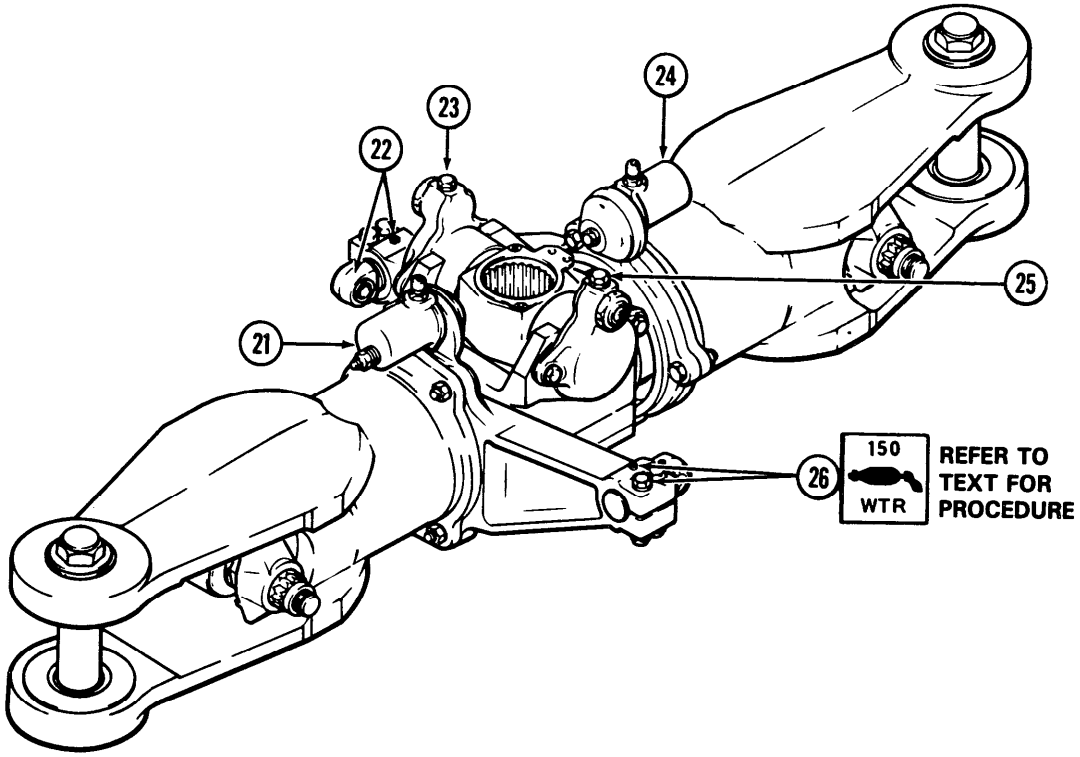

DETAIL B

OIL LUBRICATED ROTOR HUB

206900-540-3

WARNING

Do not allow main rotor blades to rotate on pitch axis while main rotor pitch links are disconnected in following step. If blade is inadvertently allowed to rotate on pitch change axis beyond 90 degrees, the main rotor grip retention strap must be replaced prior to operation of the helicopter.

a. Lubricate trunnion lubrication fittings (26) and the opposite trunnion lubrication fittings (22) as shown. During lubrication procedure disconnect main rotor pitch links and support pitch horn to prevent rotor blades from rotating on pitch change axis. Apply lubricant at fitting, rotate trunnion bearing 360 degrees clockwise and 360 degrees counterclockwise. Apply lubricant until clean lubricant is purged out of bearing seal. Lubricate through 2 fittings at each trunnion. Connect main rotor pitch links and ensure that cotter pins are installed in bolts.

b. Lubricate grip reservoirs and pillow block reservoirs as shown on figure , Servicing Diagram.

Figure 1-5. Lubrication Chart (Sheet 3 of 6)

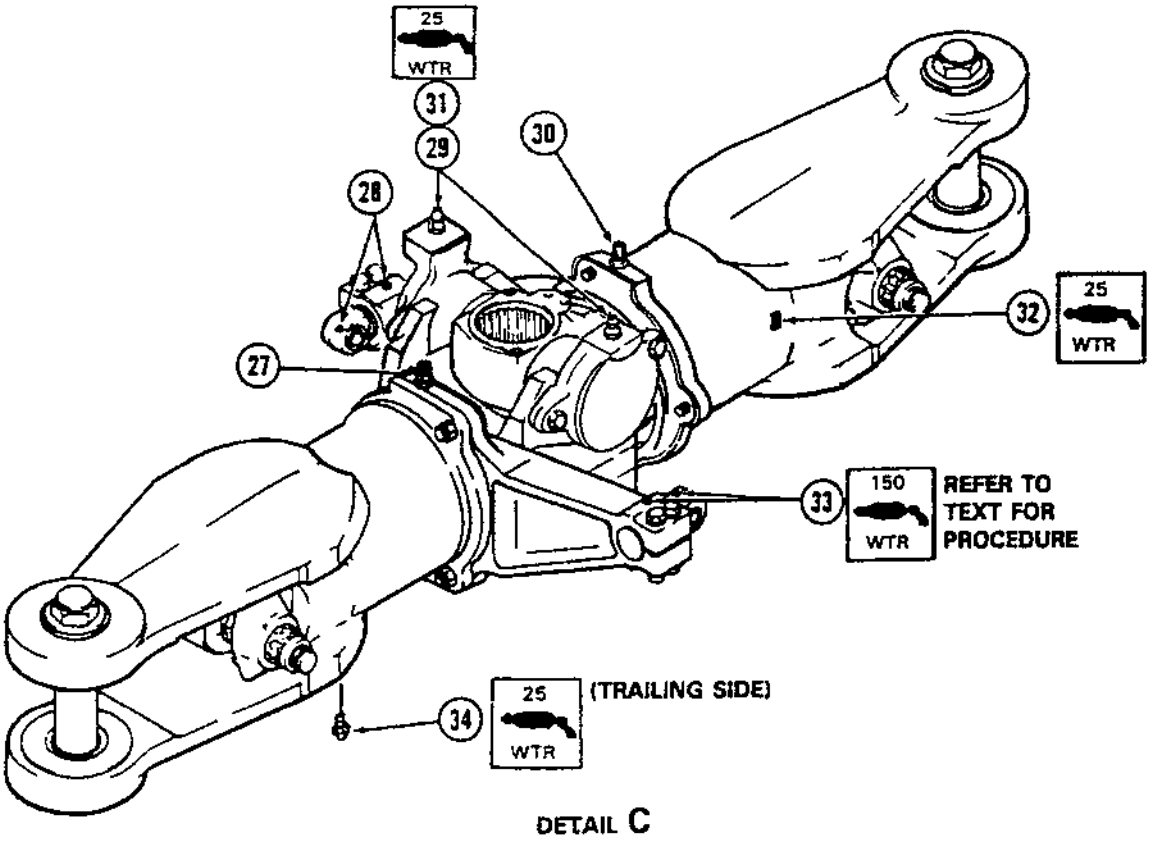

GREASE LUBRICATED ROTOR HUB

If grease lubricated rotor hub has been installed, lubricate as follows:

WARNING

Do not allow main rotor blades to rotate on pitch axis while main rotor pitch links are disconnected in following step. If blade is inadvertently allowed to rotate on pitch change axis beyond 90 degrees, the main rotor grip retention strap must be replaced prior to operation of the helicopter.

a. Lubricate trunnion lubrication fittings (33) and the opposite trunnion lubrication fittings (28) as shown. During lubrication procedures disconnect main rotor pitch links and support pitch horn to prevent rotor blades from rotating on pitch change axis. Apply lubricant at fitting, rotate trunnion bearing 360 degrees clockwise and 360 degrees counterclockwise. Apply lubricant until clean lubricant is purged out of bearing seal. Lubricate through 2 fittings at each trunnion. Connect main rotor pitch links and ensure that cotter pins are installed in bolts.

b. Purge grip cavities with grease at grease fittings (32 and 34) until clean grease is purged past relief valves (27 and 30).

c. Purge pillow block cavities with grease at grease fittings (29 and 31).

d. When grease lubricated hub is placed in service, lubricate after first runup, after first flight, and each 25 hours thereafter.

Figure 1-5. Lubrication Chart (Sheet 4 of 6)

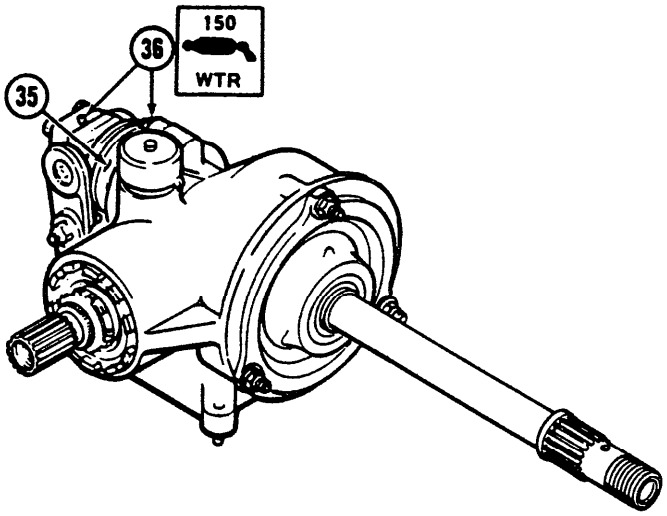

DETAIL D

TAIL ROTOR PITCH CONTROL LUBRICATION FITTINGS

206900-540-5

Lubricate two pitch control lubrication fittings (36) as follows:

a. Loosen boot (35) on large end to prevent pumping grease into tail rotor gearbox.

b. Lubricate two fittings (36) as shown on detail D until grease just purges past seal. Do not over lubricate. Clean boot of all grease after purging.

c. Check to ensure that vent holes in control tube and bushing are aligned and free of obstruction. (Reference para 5-212 and included note.)

d. Secure boot (35).

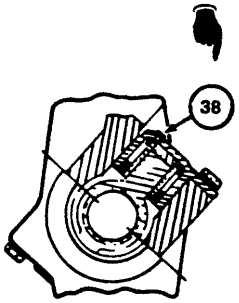

DETAIL E

206900-540-5

The improved tail rotor hub trunnion (MWO 55-1520-228-50-25) shall be purge lubricated with grease MIL-G-81322 as follows:

a. Every 25 hours.

b. After each day's operation when exposed to rain, snow, washing, or other moisture.

c. At each runup when in flyable storage.

Figure 1-5. Lubrication Chart (Sheet 5 of 6)

WARNING

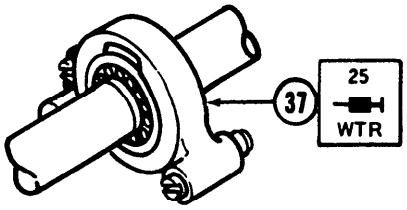

Do not use glass syringe. Breakage of a glass syringe can result in severe injury.

DETAIL F

TAIL ROTOR DRIVESHAFT HANGER BEARINGS

206900-540-6

Lubricate all eight bearings with hypodermic syringes (C134) and 18 gage needle (C108) as follows: (use of a hand grease gun with locally procured or made needle adapter is acceptable.)

a. For bearings having no grease ports, insert tapered portion of needle under lip of bearing seal using care to avoid damage to seal.

b. For bearings, P/N 206-040-339-9 having grease ports lubricate through these ports.

c. Inject 0.5 cc to 1.0 cc of grease (C77) into each bearing.

d. After lubrication is complete, wipe off all excess grease.

CAUTION

Do not exceed lubricant quantity stated. Excessive lubrication or lubrication by pressure method will damage bearing seals.

1. Starter-Generator Gear Shaft and Engine Adapter Splines
2. Tail Rotor Spline Couplings
3. Engine to Transmission Driveshaft Couplings
4. Ground Handling Truck (Wheels)
5. Swashplate
6. Cap Assembly
7. Seal
8. Hole (Cap has four symmetrically spaced holes)
9. Seal
10. Bearing
11. Lubrication Fitting
12. Outer Ring
13. Seal
14. Cap Assembly
15. Seal
16. Lubrication Fitting
17. Outer Ring
18. Bearing
19. Lubrication Fitting
20. Seal
21. Grip Oil Reservoir
22. Trunnion Lubrication Fitting
23. Pillow Block Reservoir Filler Plug
24. Grip Oil Reservoir
25. Pillow Block Reservoir Filler Plug
26. Trunnion Lubrication Fitting
27. Relief Valve
28. Trunnion Lubrication Fitting
29. Pillow Block Grease Fitting
30. Relief Valve
31. Pillow Block Grease Fitting
32. Grease Fitting
33. Trunnion Lubrication Fitting
34. Grease Fitting
35. Boot
36. Lubrication Fittings
37. Driveshaft Hanger Bearing
38. Lubrication Fitting

Figure 1-5. Lubrication Chart (Sheet 6 of 6)

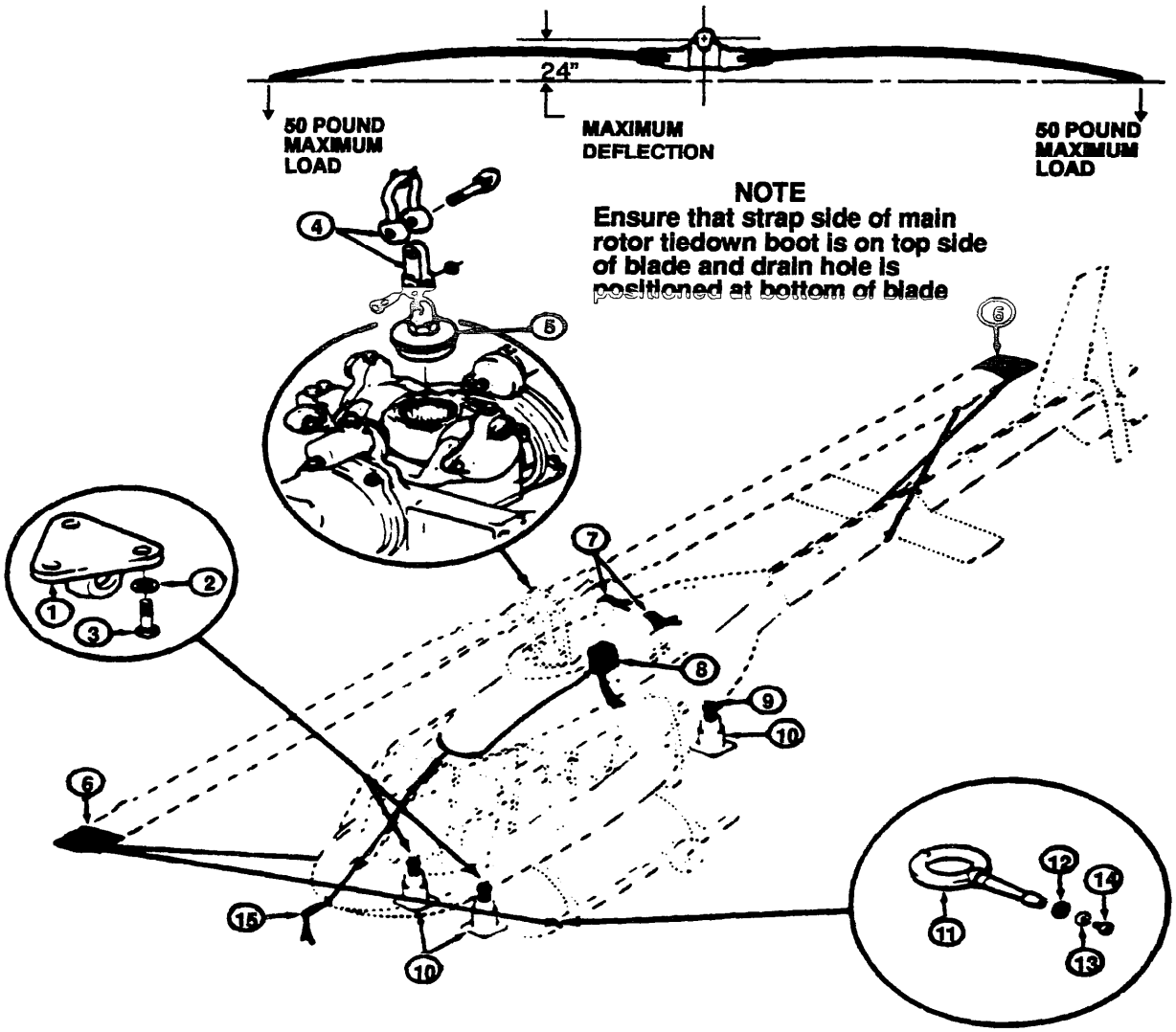

1. Forward Jogging and Teardown Fitting
2. Washer
3. Bolt
4. Hosting Adapter
5. Main Rotor Mast Nut
6. Main Rotor Tiedown
7. Engine Exhaust Cover
8. Engine Inlet Shield
9. Aft Jacking and Tiedown Fitting
10. Jack
11. Tow Fitting
12. Washer
13. Washer
14. Screw
15. Pitot Tube Cover

Figure 1-6. Ground Handling (Sheet 1 of 2)

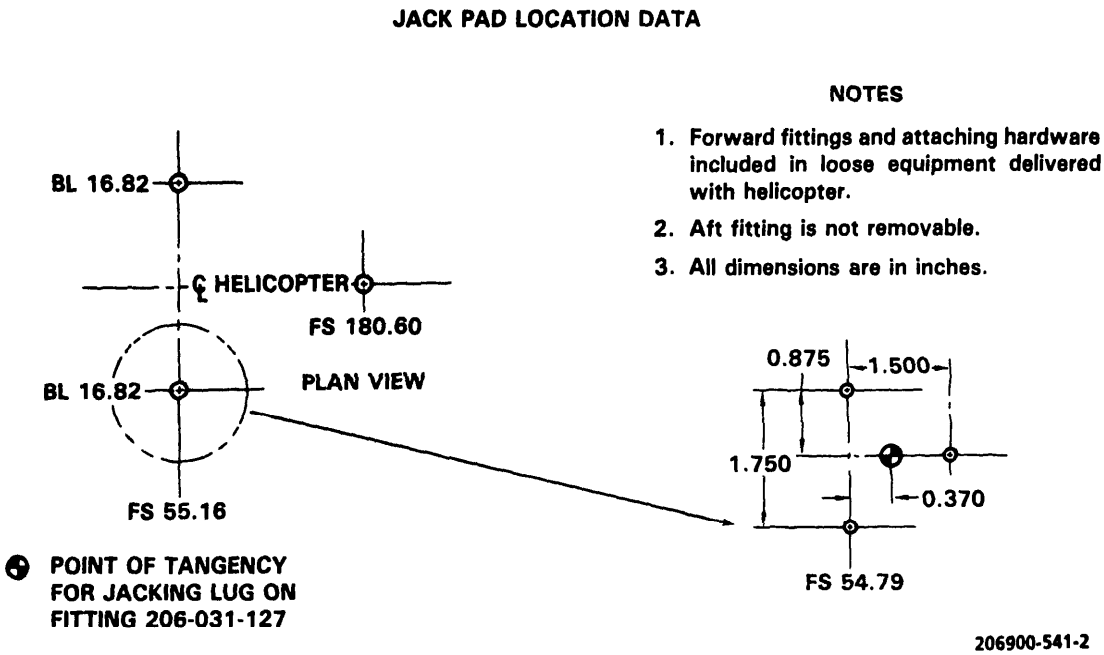

Figure 1-6. Ground Handling (Sheet 2 of 2)

attachment of a standard aircraft tow bar (S1). Helicopter is towed on ground handling truck assemblies mounted on the landing skids.

CAUTION

Tow the helicopter slowly, observing obstructions to prevent damage to main rotor blades.

b. Station one person in area of horizontal stabilizer to apply a light force, as needed, to the tailboom to guide and balance the helicopter and to advise towing vehicle driver of conditions at tailboom during towing.

1-38. JACKING.

CAUTION

It is required that area around helicopter be roped off and signs displayed to warn that: THIS HELICOPTER IS ON JACKS.

NOTE

The two forward jacking and tiedown fittings (1, figure 1-6) are loose equipment and must be installed prior to jacking.

a. Place two jacks (S14) (10) under two forward jacking and tiedown fittings (1) located forward of the landing gear crosstube at each side, and one jack (10) under the aft jacking and tiedown fitting (9) aft of the anticollision light.

b. Raise helicopter evenly. Observe the following precautions while helicopter is supported on jacks:

(1) Do not climb on or enter helicopter.

(2) Personnel will use caution to avoid bumping or otherwise disturbing helicopter while helicopter is on jacks.

CAUTION

Do not leave helicopter unattended when using jacks without positive locks.

c. After necessary work, lower helicopter slowly and evenly. Remove jacks.

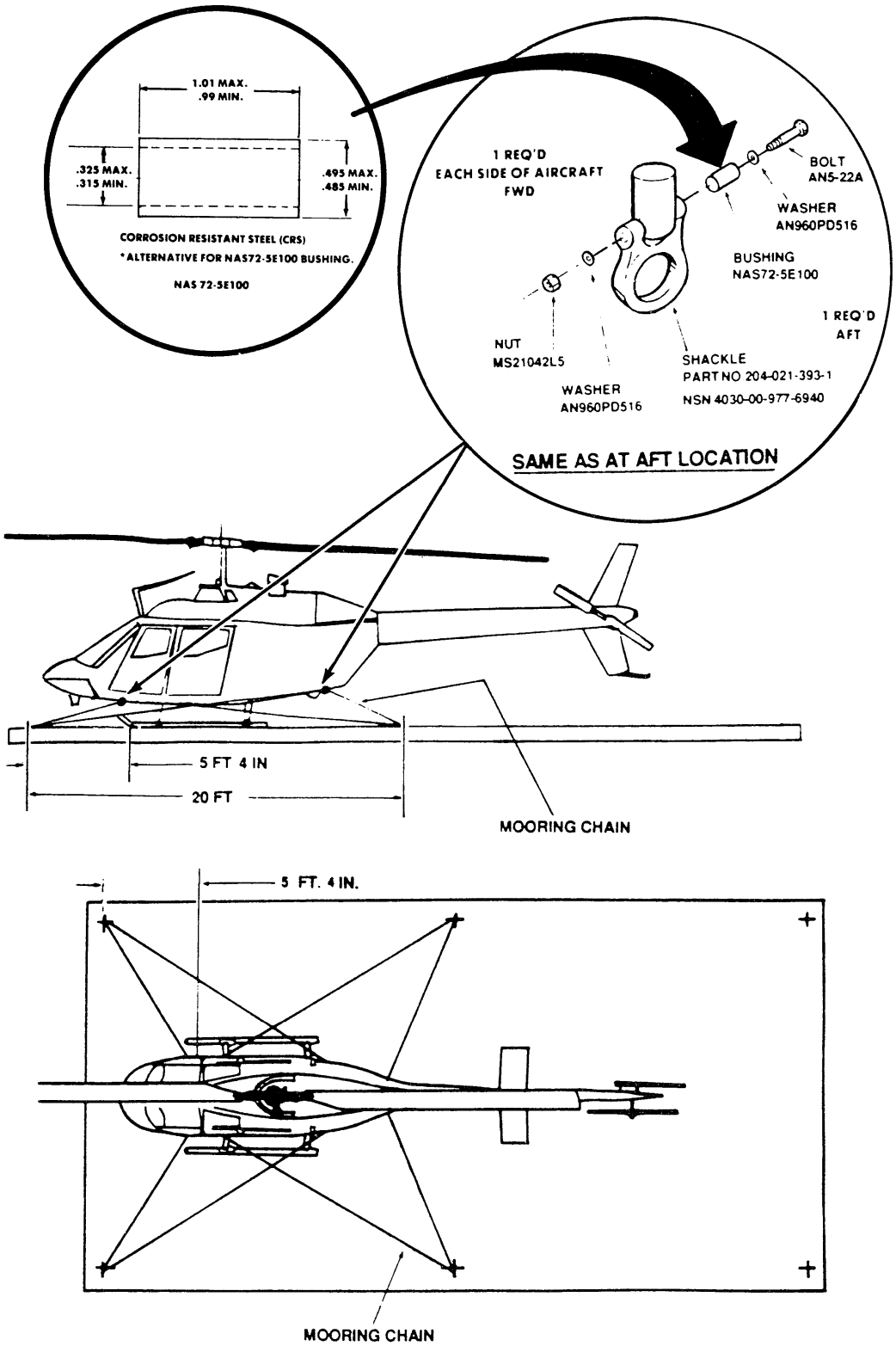

Figure 1-6.1. OH-58 A & C Paved Surface Mooring Con.guration

Table 1-5. Tie-Down and Mooring Hardware

Item No.	Description	Part Number	NSN	QTY
1	Chain Adjuster	MB-1	1670-00-212-1149	8
2	Chain with Hook	For MB-1	4010-00-516-8405	16
3	Shackle	204-031-393-1	4030-00-977-6940	3
4	Bolt	AN5-22A	5306-00-151-2621	3
5	Washer	AN960PD516	5310-00-187-2399	6
6	Nut	MS21042L5	5310-00-807-1476	3
7	Bushing	NAS72-5E100	3120-01-245-2631	3
8	Polyester Rope 1/2 inch diameter		4020-00-630-4873	AR

1-39. PARKING.

a. Retract the ground handling trucks (S13) and allow the helicopter to rest on the skid-type landing gear. Refer to Chapter 3.

b. Install shield assemblies (8) in engine induction fairing, cover (7) on engine exhaust, and cover (15) on pitot tube.

c. Install static grounds.

1-40. TIE-DOWN AND MOORING. For tie-down and mooring hardware (see Table 1-5).

CAUTION

Structural damage can occur from flying objects during high wind conditions. Helicopter should be hangared or evacuated to a safe area when wind conditions above 50 knots are expected.

NOTE

All active mooring points shall be equipped with this hardware. For additional information refer to TM 1-1500-250-23.

1-40.1. MOORING, PAVED SURFACE.

a. Position the aircraft on the mooring pad with the longitudinal centerline of the aircraft directly above and parallel to the longitudinal axis on the pad as shown in figure 1-6.1. The forward mooring rings are to be located 5 feet 4 inches aft of the first mooring point as shown.

NOTE

It will be necessary to attach a mooring clevis to each of the three jack/mooring points. The clevis provided with the aircraft will not be large enough to accept the hooks on the mooring chains provided with the mooring pad. Mooring rings are to be installed on the aircraft as shown in figure 1-6.1.

b. Place the hook-ends of the mooring chains into the appropriate clevis rings. Adjust the chains using the adjusting devices provided on the mooring pad. Chains should be adjusted to the point where the slack has been removed.

CAUTION

The mooring hardware is to be carried in the flyaway kit. Flying the OH-58 with the mooring hardware installed may result in damage to the aircrafts' honeycomb surface. Retain all hardware together for each specific installation, due to wear, the bushings may not be interchangeable.

1-40.2. MOORING, UNPAVED SURFACE.

If suitable spaced ramp tiedowns are not available, park the helicopter on an unpaved parking area headed in the direction from which the highest velocity forecast winds are expected and retract ground handling trucks (S13). Use anchor rods (S2), to make "dead man" anchors. Moor helicopter as described in para 1-40.1.

1-40.3. ROTOR BLADE TIE-DOWN.

CAUTION

Secure the tiedown ropes carefully. Do not damage the skin by flipping the strap weights around the tailboom.

a. To tie-down the aft blade, securely tie the straps of the boot to the 1/2 inch polyester rope near the boot. Ensure the ropes are long enough to cross and tie in position illustrated in figure 1-6.

b. The forward blade shall also be tied-down using the same boot strap/rope arrangement device. The ropes shall be tied to the forward eyebolts of the landing skids as shown in figure 1-6.

CAUTION

Maximum load at tips is 50 pounds. Maximum allowable deflection is 24 inches measured between flapping axis and connecting line between blade tips as shown in figure 1-6. Excessive deflection of the blade can result in delamination of the doubler.

c. Install covers on pitot tube (15), engine exhaust cover (7) and engine inlet shields (8).

d. An alternative method of installing pitot and engine inlet covers shown in figure 1-6 will aid in preventing marring and scratching of windshields and is accomplished as follows:

(1) Route strap from pitot tube through the lower front edge of pilot door near lower hinge, and then out the top edge of door to engine air inlets.

(2) Cut the strap connecting the pitot cover to the engine shields strap at both ends. The pitot tube cover may be held in place with the nylon cord and/or a scrapped packing of the proper diameter. If a packing is used, it may be permanently attached to pitot tube cover to prevent its loss when the cover is removed. The strap connecting the engine shields should also be shortened.

e. Position collective control full down, and tighten friction.

f. Center cyclic control and tighten friction.

g. Close all windows, doors, and access panels.

h. Fill fuel tank to capacity with prescribed fuel.

i. Secure all ground handling equipment.

1-41. HELICOPTER COVERS. Protective covers must be installed at locations shown in figure 1-6 when helicopter is parked/moored.

1-42. HOISTING.

CAUTION

Ensure that main rotor tiedown (6, figure 1-6) is installed prior to any ground handling.

CAUTION

Do not move helicopter with pilot or copilot windshield removed. Station individual at the hoist emergency shut-off in case of run-away condition.

a. Attach a hoisting shackle (S16) (4, figure 1-6) or cable to eye provided on retaining nut at top of main rotor mast (5). Connect a suitable hoist shackle or cable and take up slack.

b. Station a person at tail skid to steady helicopter when hoisted. If lifting beyond reach from ground, use of a steadying rope will be necessary.

c. Hoist slowly with a steady lifting force.

WARNING

Install aircraft jacks (S14) prior to removal or installation of landing gear.

CAUTION

The following hoisting procedures apply to recovery of downed aircraft only.

All hoisting of serviceable aircraft shall be by using the hoisting shackle and adapter only.

Use of the "belly band" and/or rotor head sling as cited in FM 55-413 is not authorized for serviceable aircraft and/or maintenance.

d. When hoisting is required as a part of recovery the following additional precautions will apply.

(1) If main rotor mast and transmission attaching points are intact recover as follows:

(a) Remove all loose equipment from cabin and passenger compartment.

(b) Tie down or remove main rotor and tail rotor blades from hubs.

(c) Attach main rotor sling (T12) or suitable substitute to hoisting shackle and secure loosely to main rotor hub grips to provide a secondary lifting device in case of failure of the main rotor hub nut.

(2) If main rotor mast is not in place or structural damage is suspected proceed as follows:

(a) Remove all loose equipment from cabin and passenger compartment.

(b) Remove all loose or broken hardware (i.e., cowling, tailboom, etc.).

(c) If landing gear cross tubes are intact, provide a four point sling to the cross tubes on each side of the fuselage to a common hoisting shackle. Use standard sling to provide lifting capability of a minimum of 3,000 pounds **A** or 3,200 pounds **C**. Protect fuselage where sling may contact with padding.

(3) If (1) or (2) above cannot be accomplished use larger cargo net under the fuselage with the four corners of the net attached to the lifting clevis.

1-43. SLING LOADING.

CAUTION

The sling loading procedures of FM 55-413 are for recovery of downed aircraft only. As stated in that manual, sling loading will often cause damage to the aircraft.

All normal hoisting of serviceable aircraft shall only be by the procedures of this manual, paragraph 1-42 hoisting procedures.

Use of the "belly band" procedures and/or rotor head sling as covered in FM 55-413 is not authorized for normal maintenance procedures on serviceable aircraft.

Refer to FM 55-413 for sling loading information.

1-44. WEIGHT AND BALANCE.

Refer to TM 55-1520-228-10, TM 55-1500-342-23 and AR 95-3, Chapter 6, Aircraft Weight and Balance.

WARNING

Weight and Balance Records must reflect true and accurate information relative to helicopter configuration at all times.

1-45. LEVELING.

a. Drop plumb bob from smaller hole in upper plate at water line 71.5 and fuselage station 90.0. When pointer is at center of + target on lower plate secured to compartment floor, helicopter is level. Jack to correct helicopter position. Refer to figure 1-7.

b. The fuselage and buttline station shown in figure 1-7 for the lower leveling plate is only approximate. If the lower plate must be installed and the previous location is not indicated by prior rivet holes, contact AMCOM Engineering for instructions. Do not install a lower plate unless the former location is obviously indicated.

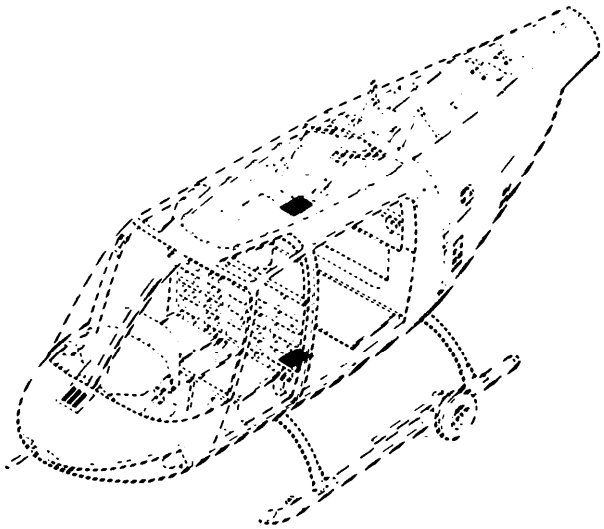

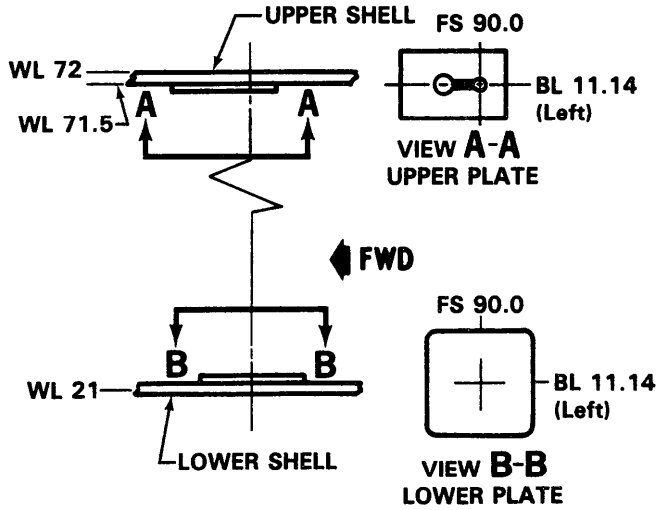

Drop plumb bob from smaller hole in upper plate. When pointer is at center of "+" target on lower plate, the helicopter is level.

206900-542

Figure 1-7. Helicopter Leveling Plates

1-46. APPLICATION OF EXTERNAL POWER.

An external power unit with a 28-volt DC output, and minimum capacity of 300 amperes is required for starting the engine; however, limits of 300 to 750 amperes and 28 volts are allowable for starting the engine.

a. Turn helicopter battery switch OFF.

b. Turn external power OFF.

c. Plug the external power source cable securely into the external power receptacle (8, figure). Turn external power source switch ON. The electrical system for helicopter should be energized.

NOTE

An external power unit should be used for the first start of the day; however, engine starts can be made on helicopter battery power, but are not recommended.

SECTION IV INSPECTION REQUIREMENTS

1-47. INSPECTION REQUIREMENTS.

1-48. GENERAL INFORMATION. This section contains complete requirements for special inspection, overhaul and retirement schedule, and standards of serviceability applicable to the helicopter. The inspections prescribed in this chapter shall be accomplished at specific periods by aviation unit maintenance activities with the assistance of intermediate maintenance activities when required. Complete Daily and Periodic inspections are contained in Preventive Maintenance Checklists (TM 55-1520-228-PM, TM 55-1520-228-PMD A /C).

NOTE

During inspection, ensure that component identification plates are available and, if applicable, are current in accordance with TB 55-1500-307-24.

NOTE

During inspection of teflon lined bearings, for additional data on bearings, refer to TM 55-1500-322-24 (Maintenance of Aeronautical Antifriction Bearings).

1-49. STANDARDS OF SERVICEABILITY.

Standards of Serviceability to be utilized in the day-to-day inspection and maintenance of the helicopter can be found as fits, tolerances, wear limits, and specifications in the applicable chapter. Standards of serviceability for transfer to helicopter are contained in TM 1-1500-328-23.

1-50. SPECIAL INSPECTION.

NOTE

Special inspection criteria may be expanded as deemed necessary by the aviation unit commander.

This section supplements the scheduled inspection as outlined in the Preventive Maintenance Checklists (TM 55-1520-228-PM, TM 55-1520-228-PMD A /C). This section also includes inspection of items which are required to be inspected at intervals not compatible with airframe, operating time, or airframe inspection intervals. Refer to DA PAM 738-751 for applicable forms, records, and worksheets required for these inspection intervals. Typical of this type inspection items are:

a. An inspection which is contingent upon specific conditions or incidents that arise, and only because of these conditions or incidents, immediate inspection is required to ensure safety of flight. Typical of these conditions are hard landings, overspeed, and sudden stoppage.

b. Inspection of components or airframe on a calendar basis: first aid kits, weight and balance checks, aircraft inventory, etc.

c. Refer to DA PAM 738-751 for applicable forms, records, and worksheets.

d. Refer to figure 1-8 for inspection areas.

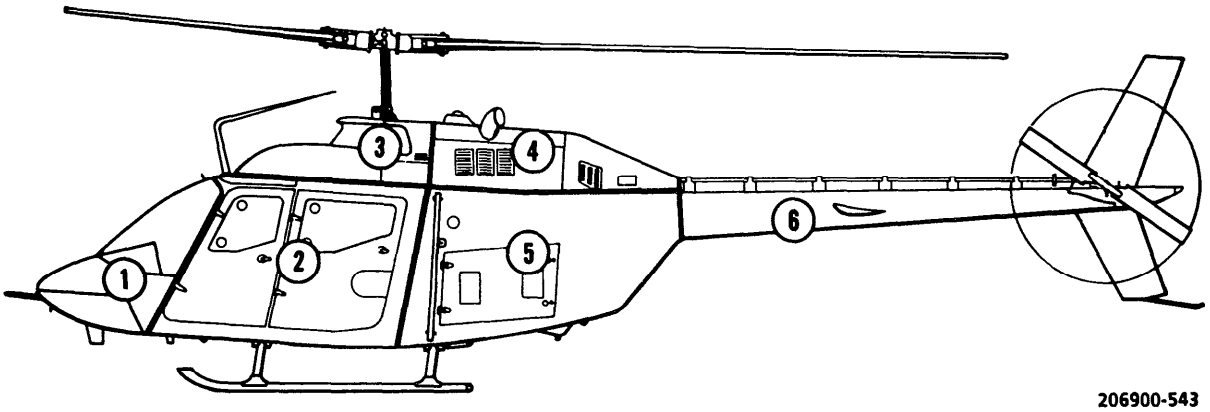

Area No. 1 Nose Area

All surfaces and components in nose compartment and on exterior ahead of crew doors.

Area No. 2 Cabin and Landing Gear Area

All surfaces, components, equipment inside cabin, and on cabin exterior between forward side of crew doors and aft side of passenger door and cabin overhead. Includes complete landing gear, fuel cell sumps and filler.

Area No. 3 Transmission and Pylon Area

All surfaces, components, and equipment of the main motor pylon group, from top of mast to cabin roof. Includes main rotor, mast and rotating controls, transmission with accessories and mounts, and main drive shaft.

Area No. 4 Engine Area

All surfaces, components, and equipment associated with engine installation, located above engine work deck and within engine cowling and tailpipe fairing.

Area No. 5 Avionics and Aft Fuselage Area

All surfaces, components, and equipment in fuselage below engine deck level, between cabin area and tailboom attachment bulkhead.

Area No. 6 Tailboom

All surfaces, components, and equipment located in the tailboom and vertical fin structure. Includes tail rotor, elevator, and control linkages. Also all supports, bearing, and shaft mounted on tailboom.

Figure 1-8. Inspection Area Diagram

AIRCRAFT INSPECTION CHECKSHEET		TYPE OF INSP (Daily, Intermediate, etc.) SPECIAL	PAGE NO. 1	NO. OF PAGES 28	
AIRCRAFT AND SERIAL NO.		INSPECTION NO.	DATE OF INSPECTION		
AREA NO.	REQUIREMENT EVERY	ITEM		STATUS	RECORDED ON WORKSHEET
All Areas	AFTER A HARD LANDING Definition: Hard landing is defined as any accident or incident in which ground impact of the helicopter causes severe pitching of main rotor, allowing hard contact of hub with mast, or results in noticeable yielding or cracking of fuselage pylon support structure or landing gear. This definition is confined only to those accidents not involving sudden stoppage of main rotor or tail rotor. Inspections: When a probable hard landing incident has occurred, proceed as follows: **e.** Check all cowling and doors for proper fit and alignment. Misaligned cowling may indicate a distorted fuselage, resulting in major stresses and damage. Remove centerpost cover assembly and inspect cap angles for buckling and bending. **b.** Remove all cowling as necessary to perform a complete visual inspection. **c.** Inspect landing gear skid tubes and crosstubes for damage and deflection. Inspect crosstube attachment points for damage or distortion. **d.** Inspect structure with a 10-power magnifying glass around the transmission mounting points. Particular attention should be given to the isolation mount and pylon support mounts. Inspect the transmission support where the spike on the drag pin assembly fits into the stop. This area is directly under the transmission on top of the cabin. **e.** Inspect upper longerons and adjacent skin near the aft engine firewall (station 167) for loose rivets, cracks, or distortion. **f.** Inspect tail skid tube and mounting for damage. Inspect tailboom internally and externally for cracks, distortion, and loose rivets. Inspect the tailboom attachment points for elongated bolt holes and damaged structure. Inspect external skin of tailboom for cracks in area of attachment of the horizontal stabilizer. **g.** Deleted. **h.** Deleted.			

AIRCRAFT INSPECTION CHECKSHEET			TYPE OF INSP (Daily, Intermediate, etc.) SPECIAL	PAGE NO. 2	NO. OF PAGES 28
AIRCRAFT AND SERIAL NO.			INSPECTION NO.	DATE OF INSPECTION	
AREA NO.	REQUIREMENT EVERY	ITEM		STATUS	RECORDED ON WORKSHEET
		j. Completely inspect the flight control system from pilot controls to rotor head for bent or damaged tubes, bellcranks, and supports, and for damaged bearings. Particular attention should be given to the pitch links and collective sleeve assembly. **k**. Check for leaks in the hydraulic system and interference or binding, and for satisfactory operation. **l.** Inspect the transmission and mast assembly for the following: **(1)** Mast for indentation caused by hard contact with static stops. **(2)** Mast outside diameter (O.D.) for out-of-round condition as follows: **(a)** Using a suitable micrometer, measure the mast O.D., at a minimum of six places for out-of-round condition; two opposing measurements under the collar set and above the swashplate, two opposing measurements midway between the collar set and the static stop contact area, two opposing measurements approximately **2.000** inches below the static stop contact area on the mast. **(b)** If any set of opposing measurements vary in excess of **0.002** inch, the mast is suspected of bending and a runout check must be performed. **NOTE** Cadium plating on the outside diameter of mast is 0.0003 to 0.0004 inch. **(3)** Structure supporting the transmission — mount points for cracks or deformation. **(4)** Transmission — drag pin for security of attachment. Refer to paragraph 2-291. **(5)** Transmission — drag pin — transmission mount support on cabin roof for deformation and/or loss of attachment bolt torque. Supporting structure for damage and loose or sheared rivets.			

AIRCRAFT INSPECTION CHECKSHEET			TYPE OF INSP (Daily, Intermediate, etc.) SPECIAL	PAGE NO. 3	NO. OF PAGES 28
AIRCRAFT AND SERIAL NO.			INSPECTION NO.	DATE OF INSPECTION	
AREA NO.	REQUIRE-MENT EVERY	ITEM		STATUS	RECORDED ON WORKSHEET
		NOTE If inspection, substeps (1) or (2), reveals yielding or deformation in the area which would be contacted by the main rotor hub, the mast assembly should be considered unserviceable/nonreparable. Mast assembly should be disposed of locally. If any inspection, substeps (1) through (5), reveals an unsatisfactory condition, proceed as follows: **(a)** The transmission-to-engine coupling will be removed and a detailed inspection performed. **(b)** The transmission assembly will be removed and returned to depot. **(6)** Inspect the two forward and the two aft transmission support straps for cracks. Refer to paragraph 2-299. **m.**Inspect main rotor blades for contact With tailboom. If damage is found, refer to AFTER SUDDEN STOPPAGE — MAIN ROTOR. **n.** Inspect tail rotor blades for damage. If damage is found, refer to AFTER SUDDEN STOPPAGE — TAIL ROTOR. **o.** Inspect fuel and oil systems for damage. Before flight, check fuel and oil systems for leaks. Inspect the crashworthy fuel system for the following: **(1)** Sump retainer and surrounding airframe for cracks and/or distortion. **(2)** Sump area for leaks. **(3)** Sump drain valve for proper operation. **(4)** Fuel boost pump wiring for broken leads. **(5)** Retainer at filler cap and adapter for cracks and/or sheared rivets. **(6)** Relation of fuel cell fitting with airframe fuel opening. **(7)** Fuel feed hose for clamping security inside fuel cell.			

AIRCRAFT INSPECTION CHECKSHEET			TYPE OF INSP (Daily, Intermediate, etc.) SPECIAL	PAGE NO. 4	NO. OF PAGES 28
AIRCRAFT AND SERIAL NO.			INSPECTION NO.	DATE OF INSPECTION	
AREA NO.	REQUIREMENT EVERY	ITEM		STATUS	RECORDED ON WORKSHEET
		(8) Cover assembly to ensure no pullout has occurred at screws attaching cover assembly to seat back panel. **(9)** Fuel feed valve at top right side of fuel tank for cracks. **(10)** Boost pump pressure available to engine and that no leakage occurs. **(11)** Manual shutoff valve for binding. **(12)** Fuel quantity indicator for proper operation and probe leads for broken wires. **(13)** All hoses for chafing and broken or distorted clamps. **p**. Inspect engine mounts and fuselage attachment points for cracks and damage. **q**. Check power and accessory gearbox for cracked flanges. **r**. Inspect magnetic chip detectors for metal accumulation. **s**. Check engine mounting pads for cracks. **t**. Check air, oil, and fuel hose connections for tightness. **u**. Check all engine accessories for cracked flanges, loose bolts and nuts, connections, and general condition. **v**. Perform engine hard landing inspection. Refer to TM 55-2840-241-23. **w**. After a hard landing: If damage or misalignment to fuselage structure, skid gear, or tailboom is such that a major repair, replacement, or alignment is necessary, refer to TB 43-0002-3 and proceed as follows: **(1)** Remove and inspect the following components and make disposition as indicated: **(a)** Transmission assembly. (Depot) Refer to paragraphs 6-70, 6-71, and 6-74. **(b)** Mast assembly (AVIM). Refer to paragraphs 6-93 and 6-96.			

AIRCRAFT INSPECTION CHECKSHEET		TYPE OF INSP (Daily, Intermediate, etc.) SPECIAL	PAGE NO. 5	NO. OF PAGES 28	
AIRCRAFT AND SERIAL NO.		INSPECTION NO.	DATE OF INSPECTION		
AREA NO.	REQUIREMENT EVERY	ITEM		STATUS	RECORDED ON WORKSHEET
		(c) Transmission-to-engine coupling assembly. Refer to paragraphs 6-11 through 6-14. **(d)** Tail rotor driveshafts. Refer to paragraphs 6-114 and 6-116 (before compliance with MWO 55-1520-228-20-25). Refer to paragraphs 6-158 and 6-160 (after compliance with MWO 55-1520-228-50-25). **(2)** If a thorough visual inspection does not reveal any discrepancies or obvious damage to components listed below, they may be retained in service for continued usage. **(a)** Main rotor hub and blades **(b)** Main rotor controls **(c)** Swashplate and support assembly **(d)** All control rods and bolts **(e)** 90 degree gearbox **(f)** Tail rotor hub and blades **(g)** Tail rotor controls **(h)** Isolation mount. **x**. After a hard landing: If damage is found in rotating controls, accomplish the following steps: **(1)** Replace all control rods and bolts from hydraulic servos to the main rotor hub. **(2)** Remove and inspect the following components and make disposition as indicated: **(a)** Main rotor hub assembly. (Depot) Refer to paragraph 5-8. **(b)** Swash plate and support assembly. (AVIM). Refer to paragraph 5-114. **y**. After a hard landing: Inspect wire strike protection system (WSPS) as follows: **(1)** Lower assembly: **(a)** Inspect for obvious damage to WSPS.			

AIRCRAFT INSPECTION CHECKSHEET		TYPE OF INSP (Daily, Intermediate, etc.) SPECIAL	PAGE NO. 6	NO. OF PAGES 28	
AIRCRAFT AND SERIAL NO.		INSPECTION NO.		DATE OF INSPECTION	
AREA NO.	REQUIREMENT EVERY	ITEM		STATUS	RECORDED ON WORKSHEET
A Areas	**(b)** Inspect attachment area for damage. **(2)** Windshield deflector and upper WSPS assembly: **(a)** Inspect for obvious damage to WSPS. **(b)** Inspect attachment area for damage. **AFTER PYLON WHIRL** Definition: A combination of very low rotor speeds, below 330 RPM A . 93% C , and high collective blade angles which results in excessive flapping of the main rotor hub, which in turn causes bumping and rotation of the pylon in an elliptical pattern. Pylon whirl will usually include spike knocking and swashplate to cowling contact. a. Visually inspect the tailboom in the area aft of the tailboom attach point to the horizontal stabilizers. Look for bending, buckling, or creasing, especially on the top of the tailboom. b. Visually inspect the fiberglass fairing under the tailboom assembly on the aft section assembly for cracking. c. Visually inspect the aft section assembly of the helicopter forward of the tailboom attach point for approximately **36** inches both sides of the helicopter. Look for skin wrinkling above WL 61.76 which is characterized by permanent creasing and abrupt changes in profile. Wrinkles of this nature cross rivet patterns and frequently result in loose rivets. **NOTE** Oil canning and some wrinkling occurring aft of the avionics compartment door below WL 61.76 is normal on the helicopter. d. If the fiberglass fairing has been cracked, or if the aft section assembly skin is wrinkled above WL 61.76, the longerons and stiffeners must also be inspected for bending, cracking, or tearing. e. Visually inspect the transmission cowling for swashplate to cowling contact. Check for loose jamnuts on swashplate control tubes. Perform fluorescent penetrant inspection of swashplate support assembly for cracks at base of cylinder.				

AIRCRAFT INSPECTION CHECK-SHEET		TYPE OF INSP (Daily, Intermediate, etc.) SPECIAL	PAGE NO. 7	NO. OF PAGES 28	
AIRCRAFT AND SERIAL NO.		INSPECTION NO.		DATE OF INSPECTION	
AREA NO.	REQUIREMENT EVERY	ITEM		STATUS	RECORDED ON WORKSHEET
		f. Visually inspect the transmission drag pin assembly and its static stop for permanent deformation and security of attachment. **g**. If there is damage to the drag pin and/or its static stop, inspect the two forward and the two aft transmission support straps for cracks. Refer to paragraph 2-299. **h**. If the preceding inspections reveal no damage as a result of pylon whirl, or suspected pylon whirl, the helicopter may be released for flight. Otherwise, a complete hard landing inspection is required. AFTER SPIKE KNOCK **a**. If spike knocking occurred as a result of harder than normal landing, slope landing, unusual attitude landing, or sudden stoppage of the helicopter in sand or mud, the hard landing inspection is required. **b**. If spike knocking occurred during flight, but did not involve rotor rpms below 330 RPM A , 93% C and high collective blade angles, only the transmission adapter mount (drag link) and isolation mount must be inspected. If spike knocking was accompanied by severe vibrations (shuddering), the inspection after pylon whirl is applicable. **c**. If spike knocking occurred during flight, and involved rotor rpms below 330 A RPM, 93% C and high collective blade angles, the transmission adapter mount (drag link) and isolation mount must be inspected. Pylon whirl inspection will be performed. **d**. If spike knocking occurred during ground runup, but was induced by lateral movements of the cyclic rather than full up collective and rotor speed below 225 RPM A 63% C only the transmission adapter mount (drag link), and isolation mount must be inspected. **e**. If spike knocking occurred during ground runup with full up collective and rotor speed below 225 RPM A , 63% C , the inspection after pylon whirl will be accomplished. whirl will be accomplished.			

AIRCRAFT INSPECTION CHECK-SHEET		TYPE OF INSP (Daily, Intermediate, etc.) SPECIAL	PAGE NO. 8	NO. OF PAGES 28	
AIRCRAFT AND SERIAL NO.		INSPECTION NO.		DATE OF INSPECTION	
AREA NO.	REQUIREMENT EVERY	ITEM		STATUS	RECORDED ON WORKSHEET
		NOTE If swash plate to cowling or main driveshaft to isolation mount contact occurs, the following inspections will be complied with: Hard landing inspection, pylon whirl inspection (to include special inspection of main driveshaft assembly (paragraph 6-13). The drag pin assembly must be removed from transmission assembly for detailed inspection (paragraph 6-75). The four drag pin assembly mounting studs will be replaced. AFTER SUDDEN STOPPAGE — MAIN ROTOR **NOTE** Sudden stoppage is defined as an abnormal deceleration of the drive system caused by internal seizure of the transmission or by the main rotor or tail rotor blades striking something which causes rapid deceleration. Sudden stoppage could be further defined as an instantaneous shock load applied to the drive train and rotor system. Shock loads result from blades striking an object. Visible damage to the blades is evidence that a shock load could have been applied to the system. Damage to only the blade tip-cap fairing should not be cause to do a sudden stoppage inspection. In each case the pilot and maintenance personnel will need to evaluate what occurred and determine if the sudden stoppage inspection is required. **a**. If visible damage to either one or both blades (other than tip-cap fairing damage) is evident, remove the following components for evaluation and disposition indicated:			

AIRCRAFT INSPECTION CHECKSHEET			TYPE OF INSP (Daily, Intermediate, etc.) SPECIAL	PAGE NO. 8.1	NO. OF PAGES 28
AIRCRAFT AND SERIAL NO.			INSPECTION NO.	DATE OF INSPECTION	
AREA NO.	REQUIREMENT EVERY	ITEM		STATUS	RECORDED ON WORKSHEET
		NOTE Records of inspection should be maintained with the component to avoid repeat inspections. The records should indicate when the next inspection is due in terms of operating hours on the component so that the information is not lost when the component is separated from the aircraft. For the main and tail rotor hub, compliance and next time of the inspection will be recorded on DA Form 2408-16 (or in the continuation DA Form 2408-15) in terms of operating time on the component. For the main rotor mast and main driveshaft which do not normally have a DA Form 2408-16, maintain local records with the component when removed using data from the losing aircraft DA Form 2408-18. When the component is installed on an aircraft, the airframe hours that the next inspection is due will be entered in block 8 of the aircraft DA Form 2408-18. If record of the inspection is available, the special inspection at time of transfer to another aircraft is not required. **(1)** Main rotor blades and attachments (depot)			

AIRCRAFT INSPECTION CHECKSHEET			TYPE OF INSP (Daily, Intermediate, etc.) SPECIAL	PAGE NO. 9	NO. OF PAGES 28
AIRCRAFT AND SERIAL NO.			INSPECTION NO.	DATE OF INSPECTION	
AREA NO.	REQUIRE-MENT EVERY	ITEM		STATUS	RECORDED ON WORKSHEET
		(2) Main rotor hub (depot) **(3)** Mast (AVIM) **(4)** Swashplate assembly (AVIM) **(5)** Rotating control tubes (both pitch change links) **(6)** Nonrotating control tubes (all six swashplate to servo actuator control tubes). **(7)** Transmission (depot) **(8)** Freewheeling assembly (AVIM). **b**. After sudden stoppage with no visible damage, inspect the exterior of blades for security of all bonds and visible damage. **c**. Inspect engine mounts for security, cracks, or misalignment. **d**. Inspect each transmission magnetic plug for metal accumulation. **e**. Refer to TM 55-2840-241-23 for engine sudden stoppage inspection. **f**. Inspect engine inlet for foreign objects; then motor engine and check for unusual noise. **g**. Repeat inspection of transmission magnetic plugs after five hours of operation.			
6		AFTER SUDDEN STOPPAGE — TAIL ROTOR **a**. Visually inspect the tail rotor driveshaft support hangers for cracks or distortion. If there is obvious damage or if the driveshaft has failed as a result of torsional overload, all tail rotor driveshaft hangers will be considered unserviceable and nonreparable. **b**. Inspect the bonds between the tail rotor driveshafts and adapters for integrity. Check for obvious looseness, misalignment, or evidence of movement. If bonds have failed as a result of sudden stoppage, remove and replace the 90 degree gearbox.			

AIRCRAFT INSPECTION CHECKSHEET		TYPE OF INSP (Daily, Intermediate, etc.) SPECIAL	PAGE NO. 10	NO. OF PAGES 28	
AIRCRAFT AND SERIAL NO.		INSPECTION NO.	DATE OF INSPECTION		
AREA NO.	REQUIRE-MENT EVERY	ITEM		STATUS	RECORDED ON WORKSHEET
		NOTE Known or suspected contact of tail rotor blades with loose earth, snow, water, or vegetation does not require removal and replacement of the 90 degree gearbox unless inspection as required by this section, a. through g., reveals an obvious defect, and provided the hub assembly can be dynamically balanced. (see step j. for disposition of damaged tail rotor hub.) **c**. Inspect the tailboom in the area of the tail rotor gearbox mounting studs, using a ten-power magnifying glass. **d**. Inspect the four tailboom attachment points for cracks, distortion, damage, and security. Check torque on nuts of attachment bolts. **e**. Inspect the tailboom internally for cracks, distortion, and loose or missing rivets. Check external skin of tailboom for cracks in area of the attachment of the horizontal stabilizer. **f**. Deleted. **g**. Inspect tail rotor flight controls for damage. **h**. Inspect the horizontal stabilizer for skin cracks and looseness in mounting. **i**. Inspect the vertical fin for security and overall condition. Check the tail skid for condition and security. **j**. Visually inspect the tail rotor hub and blade assembly for damage. **(1)** If sudden stoppage originated at the tail rotor blades, the tail rotor hub and blade assembly will be considered as nonairworthy and nonreparable. Should damage be limited to minor blade tip denting, chafing or skin wrinkling with no apparent hub distortion or damage, the 90 degree gearbox will remain in service provided a replacement hub and blade assembly can be dynamically balanced. More extensive damage is cause for replacement of the 90 degree gearbox in addition to the hub assembly. **(2)** If sudden stoppage originated at the main rotor, the tail rotor hub and blade assembly may remain in service providing no visual external damage is noted. Obvious damage noted to the tail rotor hub and blade assembly is cause for detailed inspection and/or repair.			

AIRCRAFT INSPECTION CHECKSHEET			TYPE OF INSP (Daily, Intermediate, etc.) SPECIAL	PAGE NO. 11	NO. OF PAGES 28
AIRCRAFT AND SERIAL NO.			INSPECTION NO.	DATE OF INSPECTION	
AREA NO.	REQUIREMENT EVERY	ITEM		STATUS	RECORDED ON WORKSHEET
		(3) If sudden stoppage originated at the transmission or 90 degree gearbox, the 90 degree gearbox and transmission will be removed and sent to depot maintenance. Tail rotor hub and blade will be evaluated and repaired and/or disposed of locally.			
		(4) Refer to TM 55-2840-241-23 for engine stoppage inspection.			
		k. Remove and inspect freewheeling assembly (AVIM).			
3 and		AFTER MAIN ROTOR OVERSPEED			
4		If main rotor overspeeds in excess of 390 RPM **A** , 110% **C** perform the following inspections:			
		a. Main rotor blades — Return to depot for evaluation.			
		b. Tail rotor blades.			
		(1) If one blade has been damaged badly enough that metal has been torn or any bond lines have separated, then both blades must be scrapped.			
		(2) If any movement of the tip end or root end balance weights has occurred, scrap the blade.			
		(3) If the tip block is cracked, scrap the blade.			
		c. Inspect tail rotor driveshaft bearing hanger brackets for security of attachment and for cracks or bends.			
		d. Inspect oil cooler blower fan for visible distortion or cracks of the brazed vane joints.			
		e. Complete inspection of main rotor hub tension torsion strap assemblies. Refer to paragraphs 5-31 through 5-36.			
		f. Inspect Tension/Torsion (T/T) strap assemblies, fitting, pins and strap bolts.			

AIRCRAFT INSPECTION CHECKSHEET			TYPE OF INSP (Daily, Intermediate, etc.) SPECIAL	PAGE NO. 12	NO. OF PAGES 28
AIRCRAFT AND SERIAL NO.			INSPECTION NO.	DATE OF INSPECTION	
AREA NO.	REQUIRE-MENT EVERY	ITEM		STATUS	RECORDED ON WORKSHEET
1,2, and 3	AFTER WIRE STRIKE				
	a. Lower WSPS assembly.				
	(1) Inspect for obvious damage to WSPS.				
	(2) Inspect attachment area for damage.				
	b. Windshield deflector and upper WSPS assembly.				
	(1) Inspect for obvious damage to WSPS.				
	(2) Inspect attachment area for damage.				
1	AFTER LOWER WSPS GROUND CONTACT				
	a. Inspect for obvious damage.				
	b. Inspect attachment area for damage.				
	c. Remove panel and inspect structure and directional control tubes and bellcranks for damage.				
	NOTE				
	Loss of breakaway tip or damage not affecting structural integrity of installation are not causes for grounding of aircraft. However, replacement of tip and damage repair shall be accomplished as soon as practical.				
4	ANYTIME ENGINE ASSEMBLY IS REPLACED DUE TO METAL CONTAMINATION				
	Refer to TM 55-2840-241-23 for guidance regarding recognitions of relevant metal contamination. Refer to Chapter 4 for instructions concerning inspection and replacement of applicable engine accessories.				
4	ENGINE PERFORMANCE CHECK REQUIRED				
	Refer to TM 55-1520-228-MTF.				
	a. After installation of engine.				

AIRCRAFT INSPECTION CHECKSHEET	TYPE OF INSP (Daily, Intermediate, etc.) SPECIAL	PAGE NO. 13	NO. OF PAGES 28
AIRCRAFT AND SERIAL NO.	INSPECTION NO.	DATE OF INSPECTION	

AREA NO.	REQUIREMENT EVERY	ITEM	STATUS	RECORDED ON WORKSHEET
		b. Anytime poor performance is noted. **c.** Removal/replacement, repairs certain adjustment of fuel control (refer to appropriate engine manual), governor, double check valve compressor or rigging adjustment. **d.** DELETED. **e.** Anytime a fuel system control air line is loosened, as defined in TM 55-1520-228-MTF, Section II Inflight Checks. TM 55-1520-228-MTF defines that a fuel system control air line as the air lines between the fuel control and the governor, I.E., PR, PG, PY, and PC from the “Tee” fitting of the fuel control. **f.** Calibration/Replacement of torque or TOT indicating system. **g.** DELETED.		
3 and 4		**AFTER INSTALLING AN ENGINE OR ENGINE COMPONENT** **NOTE** **The term “Engine Component” applies to any engine part or assembly that may be removed and replaced at the unit and or intermediate level of maintenance.** **a.** Check turbine outlet temperature system, refer to Chapter 8 TM 55-1520-228-23. **b.** Test engine fuel pump bypass valve. Refer to TM 55-2840-241-23. **c.** Operate engine in accordance with TM 55-1520-228-10 and check for leaks. Refer to TM 55-2840-241-23. **d.** Shut down and check for leaks. **e.** Remove, inspect, replace external engine oil filter element. After compliance with MWO 1-1520-228-50-44. **f.** Perform engine post installation as follows: **NOTE** **Substeps (1) through (3) are not required when engine is removed to facilitate other maintenance and same engine is reinstalled.** **(1)** Remove, clean, inspect and reinstall both engine chip detectors. **(2)** Remove, clean, inspect and reinstall engine oil filter. Refer to TM 55-2840-241-23. **(3)** Check turbine outlet temperature system. Refer to TM 55-2840-241-23. **(4)** Torque bolts attaching engine mounts to airframe. Refer to paragraph 2-308.		

AIRCRAFT INSPECTION CHECKSHEET			TYPE OF INSP (Daily, Intermediate, etc.) SPECIAL	PAGE NO. 14	NO. OF PAGES 28
AIRCRAFT AND SERIAL NO.			INSPECTION NO.	DATE OF INSPECTION	
AREA NO.	REQUIREMENT EVERY	ITEM		STATUS	RECORDED ON WORKSHEET
4		**HEALTH INDICATOR TEST (HIT) NEW BASELINE REQUIRED**			
		Refer to TM 55-2840-241-23.			
		a. After installation of engine.			
		b. When airflow of an engine has been affected by any maintenance performed.			
3		**ANYTIME MAIN ROTOR MAST ASSEMBLY IS TRANSFERRED TO ANOTHER AIRCRAFT/TRANSMISSION.**			
		Complete disassembly inspection for corrosion and condition of parts is required (AVIM) (Paragraph 6-96).			
3		**ANYTIME TRANSMISSION IS REMOVED AS RESULT OF METAL PARTICLES.**			
		a. Remove and flush all external transmission oil lines.			
		b. Complete disassembly inspection of main rotor mast assembly is required (AVIM) (Paragraph 6-96).			
		c. Complete disassembly inspection of freewheeling assembly is required (AVIM) (Paragraph 6-29).			
3 and 4		**ANYTIME TRANSMISSION IS OPERATED WITHOUT OIL**			
		a. Complete disassembly inspection of main rotor mast assembly is required (AVIM) (Paragraph 6-96).			
		b. Complete disassembly inspection of freewheeling assembly is required (AVIM) (Paragraph 6-29).			
		c. If upper mast bearing and/or freewheeling assembly falls inspection due to oil starvation, replace transmission.			
		d. If there are any external signs of transmission damage, replace transmission.			
		e. Accomplish transmission serviceability check (Paragraph 6-6).			

AIRCRAFT INSPECTION CHECKSHEET			TYPE OF INSP (Daily, Intermediate, etc.) SPECIAL	PAGE NO. 14.1	NO. OF PAGES 28
AIRCRAFT AND SERIAL NO.			INSPECTION NO.	DATE OF INSPECTION	
AREA NO.	REQUIREMENT EVERY	ITEM		STATUS	RECORDED ON WORKSHEET
3 and 4		**f.** Take oil sample. **g.** Take special oil sample after five hours of operation. ANYTIME MAIN DRIVESHAFT IS TRANSFERRED TO ANOTHER HELICOPTER Complete disassembly and inspection is required (paragraph 6-11). This inspection not applicable to P/N SKCP2348–5 **NOTE** Records of inspection should be maintained with the component to avoid repeat inspections. The records should indicate when the next inspection is due in terms of operating hours on the component so that the information is not lost when the component is separated from the aircraft. For the main and tail rotor hub, compliance and next time of the inspection will be recorded on DA Form 2408-16 (or in the continuation DA Form 2408-15) in terms of operating time on the component. For the main rotor mast and main driveshaft which do not normally have a DA Form 2408-16, maintain local records with the component when removed using data from the losing aircraft DA Form 2408-18. When the component is installed on an aircraft, the airframe hours that the next inspection is due will be entered in block 8 of the aircraft DA Form 2408-18. If record of the inspection is available, the special inspection at time of transfer to another aircraft is not required. AFTER INSTALLING A REPAIRED FREEWHEELING UNIT **a.** Ground run helicopter for 15 minutes. Obtain as high a power level as possible without lift-off and decelerate rapidly at least 2 times. **b.** Fly helicopter in the vicinity of a safe landing area for 15 minutes and perform power recovery autorotation. **c.** Remove freewheeling magnetic drain plug and drain oil into clean container. **d.** Check plug and oil for metal chips.			

AIRCRAFT INSPECTION CHECKSHEET		TYPE OF INSP (Daily, Intermediate, etc.) SPECIAL	PAGE NO. 15	NO. OF PAGES 28	
AIRCRAFT AND SERIAL NO.		INSPECTION NO.	DATE OF INSPECTION		
AREA NO.	REQUIREMENT EVERY	ITEM		STATUS	RECORDED ON WORKSHEET
4	SUSPECTED FOREIGN OBJECT DAMAGE Refer to TM 55-2840-241-23 for foreign object damage inspection.				
6	ANYTIME THE TAIL ROTOR HUB AND BLADE ASSEMBLY IS TRANSFERRED TO ANOTHER AIRCRAFT Fluorescent penetrant inspection of the yoke, bearing liner and trunnion is required. (Refer to paragraph 5-198 or 5-233.) **NOTE** Records of inspection should be maintained with the component to avoid repeat inspections. The records should indicate when the next inspection is due in terms of operating hours on the component so that the information is not lost when the component is separated from the aircraft. For the main and tail rotor hub, compliance and next time of the inspection will be recorded on DA Form 2408-16 (or in the continuation DA Form 2408-15) in terms of operating time on the component. For the main rotor mast and main driveshaft which do not normally have a DA Form 2408-16, maintain local records with the component when removed using data from the losing aircraft DA Form 2408-18. When the component is installed on an aircraft, the airframe hours that the next inspection is due will be entered in block 8 of the aircraft DA Form 2408-18. If record of the inspection is available, the special inspection at time of transfer to another aircraft is not required.				
6	ANYTIME TAIL ROTOR DRIVESHAFT AND/OR BEARINGS HAVE BEEN REMOVED/REPLACED OR CENTERED. Not applicable on aircraft modified with MWO 55-1520-228-50-25				

AIRCRAFT INSPECTION CHECKSHEET		TYPE OF INSP (Daily, Intermediate, etc.) SPECIAL	PAGE NO. 16	NO. OF PAGES 28	
AIRCRAFT AND SERIAL NO.		INSPECTION NO.		DATE OF INSPECTION	
AREA NO.	REQUIREMENT EVERY	ITEM		STATUS	RECORDED ON WORKSHEET
		AFTER FIRST FLIGHT following maintenance operational check. Inspect slippage marks on tail rotor driveshaft bearings.			
4		AFTER SUSPECTED HOT START DUE TO GROUND POWER UNIT FAILURE.			
		a. Hot end inspection. Refer to TM 55-2840-241-23.			
		b. Battery inspection. Refer to TM 11-6140-203-14-2.			
		c. Aircraft electrical inspection.			
6		ANYTIME TAIL ROTOR GEARBOX IS INSTALLED OR ATTACHMENT HARDWARE IS ADJUSTED			
		a. Check tail rotor gearbox retaining nuts for proper torque after 100 (±10) hours of operation.			
		b. Anytime tail rotor gearbox is installed, inspect tail rotor gearbox case studs for perpendicularity. Replace any broken, bent, damaged, or loose studs in accordance with paragraph 6-190 prior to compliance with MWO 55-1520-228-50-25 or paragraph 6-125 after compliance with MWO 55-1520-228-50-25.			
		c. Anytime tail rotor gearbox is installed, inspect and verify serviceable condition for the bore of gearbox mounting holes on tail rotor gearbox support.			
6		AFTER INITIAL RUNUP FOLLOWING TAIL ROTOR GEARBOX INSTALLATION			
		Torque tail rotor gearbox hold-down nuts.			
4		AFTER POWER LOSS, N2 DROOP, OR FLAMEOUT			
		After a power loss, N2 droop, or flameout occurs, check/inspect in accordance with the troubleshooting charts in TM 55-2840-241-23.			
4		AFTER OVERTEMPERATURE OPERATION			
		Refer to TM 55-2840-241-23 for after over-temperature operation inspection.			
4		AFTER OVERSPEED OR OVERTORQUE OPERATION			
		a. Engine:			
		(1) Remove engine and tag to indicate overtorque or overspeed. Refer to TM 55-2840-241-23 for overspeed limits.			
		(2) Engine does not have to be removed after transmission overtorque .			

AIRCRAFT INSPECTION CHECKSHEET			TYPE OF INSP (Daily, Intermediate, etc.) SPECIAL	PAGE NO. 17	NO. OF PAGES 28
AIRCRAFT AND SERIAL NO.			INSPECTION NO.	DATE OF INSPECTION	
AREA NO.	REQUIREMENT EVERY	ITEM		STATUS	RECORDED ON WORKSHEET
		b. Main transmission: **(1)** After overspeed, inspect for obvious damage. **(2)** After overtorque in excess of 92 psi A , 100% C ; inspect for obvious damage. **(3)** After overtorque in excess of 106 psi A , 115% C ; return to depot maintenance for overhaul. Indicate overspeed or overtorque. **c.** Freewheeling assembly: **(1)** After overspeed inspect for obvious damage. **(2)** After overtorque inspect for obvious damage. **(3)** After overtorque in excess of 106 psi A , 115% C ; remove and inspect freewheeling assembly (AVIM). **d.** Main Driveshaft (SKCP2348-5). After overtorque of 101 psi A 110% C replace main driveshaft (SKCP2348-5).			
3, 4 and 6		**ANYTIME FUEL FILTER LIGHT COMES ON.** **a.** Perform electrical inspection of fuel filter switch/bypass light system IAW Chapter 9. If inspection isolates fault to electrical indicating/fault, repair or replace the switch. If electrical system is not at fault, continue to steps b, c, d, e, and f. **b.** Remove and replace fuel filter. Refer to TM 55-2840-241-23. **c.** Inspect fuel system for possible contamination. **d.** Remove and replace gas producer fuel control filter assembly. Refer to TM 55-2840-241-23. **e.** Inspect engine fuel dump filter bypass valve for proper operation. Refer to TM 55-2840-241-23. **f.** Remove and replace airframe mounted fuel filter element. After compliance with MWO 1-1520-228-50-48.			

AIRCRAFT INSPECTION CHECKSHEET			TYPE OF INSP (Daily, Intermediate, etc.) SPECIAL	PAGE NO. 18	NO. OF PAGES 28
AIRCRAFT AND SERIAL NO.			INSPECTION NO.	DATE OF INSPECTION	
AREA NO.	REQUIREMENT EVERY	ITEM		STATUS	RECORDED ON WORKSHEET
3, 4 and 6		**ANYTIME MAGNETIC CHIP LIGHT COMES ON, TRANSMISSION OR FREEWHEELING UNIT.** **a.** Submit oil sample for special analysis. Refer to TB 43-0211. **b.** Remove chip detector leads in turn, to determine which magnetic plug caused the light. **NOTE** **If you can identify the material on the chip detector as fuzz, stop after step c.** **c.** Remove and inspect applicable magnetic plug for metal accumulation. **d.** Clean or replace oil filter if component is acceptable. Refer to table 6-2 Metal Contamination. **ANYTIME MAGNETIC CHIP LIGHT COMES ON, ENGINE.** Refer to TM 55-2840-241-23.			
4		**IF ENGINE OIL TEMPERATURE EXCEEDS 107°C WITHOUT A CHANGE IN NORMAL OIL PRESSURE.** Refer to TM 55-2840-241-23. **IF ENGINE OIL TEMPERATURE EXCEEDS 107°C WITH A CHANGE IN NORMAL OIL PRESSURE.** Refer to TM 55-2840-241-23.			

AIRCRAFT INSPECTION CHECKSHEET	TYPE OF INSP (Daily, Intermediate, etc.) SPECIAL	PAGE NO. 18.1	NO. OF PAGES 28
AIRCRAFT AND SERIAL NO.	INSPECTION NO.	DATE OF INSPECTION	

AREA NO.	REQUIREMENT EVERY	ITEM	STATUS	RECORDED ON WORKSHEET
All Areas		**AFTER THE HELICOPTER HAS BEEN SUBJECTED TO SALT WATER OR SALT SPRAY** Wash entire helicopter with fresh water, particularly inside the engine compartment doors. Wash all components which were exposed to salt water and make a detailed check of all surfaces for corrosion. Apply corrosion preventive compound to exposed nonpainted, anodized, or cadium plated assemblies. Refer to TM 1-1500-204-23. **WHEN OPERATING WITHIN 10 MILES OF SALT WATER** (With or without Inlet Barrier Filter system installed) Clean engine compressor after the last flight of each day. Refer to TM 55-2840-241-23. **WHEN OPERATING WITHIN 200 MILES OF VOLCANIC ACTIVITY** (Without Inlet Barrier Filter system installed) Clean engine compressor after the last flight of each day. Refer to TM 55-2840-241-23. **AFTER WASHING HELICOPTER** **a.** Check pitot static system for moisture. **b.** Check fuselage and tailboom attachment fittings for accumulation of water. **c.** Check main transmission and hydraulic reservoir for accumulation of water. Water and sludge accumulation must not exceed 10% of total amount drained. **d.** Purge tail rotor trunnion with MIL-G-81322 if MWO 55-1520-228-50-25 has been applied.		
6		**AFTER HELICOPTER HAS BEEN OPERATED IN RAIN, ICE OR HEAVY SNOW** Purge tail rotor trunnion with MIL-G-81322 if MWO 55-1520-228-50-25 has been applied.		

AIRCRAFT INSPECTION CHECKSHEET			TYPE OF INSP (Daily, Intermediate, etc.) SPECIAL	PAGE NO. 19	NO. OF PAGES 28
AIRCRAFT AND SERIAL NO.			INSPECTION NO.	DATE OF INSPECTION	
AREA NO.	REQUIRE-MENT EVERY	ITEM		STATUS	RECORDED ON WORKSHEET
		ANYTIME A COMPONENT OF TURBINE OUTLET TEMPERATURE INDICATING SYSTEM IS CHANGED			
		A system calibration check is required (refer to paragraph 8-134).			
	3	AFTER PROBABLE EXPOSURE TO RADIOACTIVITY			
		Accomplish the following:			
All Areas		**a.** Survey helicopter for level of radioactivity.			
		b. Decontaminate helicopter as required. Refer to FM 3-5 and DA PAM 738-751.			
All		**TAILBOOM REPLACED**			
		When tailboom is replaced, weigh aircraft and perform weight and balance records check.			
	6	**AT EACH TRANSMISSION OIL CHANGE**			
		a. Take oil sample. Refer toTB 43-0211.			
All Areas		**b.** Drain freewheeling unit. Refer to paragraph 6-25.			
		c. Replace oil filter and inspect oil filter head assembly. Refer to paragraph 6-235.			
		d. Remove, inspect, and dean electrical chip detector plugs.			
		e. Check freewheeling unit magnetic plug.			
		f. Inspect oil sight glass for discoloration and cleanliness.			
All Areas		**g.** Inspect oil level indicator to verify transmission fluid is free to pass in and out of assembly.			
		h. Inspect oil pump inlet screen. Refer to paragraph 6-292.			

AIRCRAFT INSPECTION CHECKSHEET			TYPE OF INSP (Daily, Intermediate, etc.) SPECIAL	PAGE NO. 20	NO. OF PAGES 28
AIRCRAFT AND SERIAL NO.			INSPECTION NO.	DATE OF INSPECTION	
AREA NO.	REQUIREMENT EVERY	ITEM		STATUS	RECORDED ON WORKSHEET
All Areas	**AT EACH TAIL ROTOR GEARBOX OIL CHANGE** **a.** Take oil sample. Refer to TB 43-0211. **b.** Remove, inspect, and clean electric chip detector plug. **c.** Inspect oil sight glass for discoloration and cleanliness. 25 flight hours after installation of the tail rotor disc pack coupling recheck tail rotor disc pack coupling attaching hardware for proper torque.				
All Areas	**AT EACH ENGINE OIL CHANGE** **a.** Take oil sample. Refer to TB 43-0211. **b.** Inspect and clean oil filter. **c.** Remove, inspect, replace external scavenge oil filter element. After compliance with MWO 1-1520-228-50-44. **d.** Remove, inspect, and clean electrical chip detector plugs. **e.** Inspect oil sight glass for discoloration and cleanliness. **f.** Perform functional check of oil bypass valve. **g.** Remove and clean oil screen in line to #6 and #7 bearing. Motor engine to allow small amount of oil to escape. Refer to TM 55-2840-241-23. **h.** Perform scavenge oil flow check. Refer to TM 55-2840-241-23.				
	AFTER EMERGENCY FUEL USAGE				
4	Emergency fuel usage is limited to an accumulative total of 6.00 hours. When limit is exceeded, remove engine and return it for overhaul. Any mixture of emergency fuel to regular fuel greater than 1% of emergency fuel must be considered emergency fuel usage.				
2	Defuel tank completely. Open tank sump and drain remaining fuel into suitable container. No hot end inspection or operational check is required.				
All Areas	**AFTER ANY MODIFICATION/CHANGE TO THE EXISTING ELECTRICAL SYSTEM OR MAJOR STRUCTURAL CHANGE** Check magnetic standby and remote compass indicators for accuracy. Compensate when necessary. Refer to TM 1-1500-204-23 Series.				

AIRCRAFT INSPECTION CHECKSHEET			TYPE OF INSP (Daily, Intermediate, etc.) SPECIAL	PAGE NO. 20.1	NO. OF PAGES 28
AIRCRAFT AND SERIAL NO.			INSPECTION NO.	DATE OF INSPECTION	
AREA NO.	REQUIREMENT EVERY	ITEM		STATUS	RECORDED ON WORKSHEET
All Areas	**POST RECOVERY DAMAGED HELICOPTER PROCEDURES** Perform the following recovered aircraft inspections for ever **UMARK** aerial recover. **a.** If tail rotor blades were left on aircraft during recovery, replace tail rotor blades. **b.** If transmission drive shaft (K-Flex) coupling was not removed during aerial recovery, remove and return the engine and transmission drive shaft flex frame (K-Flex) coupling to the manufacturer for inspection. **c.** Visually inspect the skids and airframe for evidence of hard landing. **d.** Visually inspect vertical fin and soft mounts for cracks, distortion, buckled skin, and missing, sheared, or loose fasteners. **e.** Visually inspect tail rotor gearbox support and adjacent skin for cracks, distortion, buckled skin, and missing, sheared, or loose fasteners. **f.** Visually inspect drive shaft cover at sling contact points for damage, dents, cracks, and abrasion. **g.** Visually inspect tailboom joining area, attachment fittings, and bulkhead webs and skins for distortion, deformation, buckled skin, cracks, and missing, sheared, or loose fasteners. **h.** Visually inspect tailboom attachment bolt torque for loss of preload. **i.** Remove cowlings and inspect for damage, cracks, deformation, and security. **j.** Visually inspect pylon support structure on cabin roof and surrounding airframe for cracks, deformation, loss of attachment hardware, and loose or broken fasteners. **k.** Visually inspect main rotor blades for damage, cracks, and debonding. Wipe entire main rotor blades with cheese cloth (C37.1). Cloth snagging indicates possible crack. **l.** If TB 1-1670-260-12(Figure 4) Recovery Parameters are exceeded or it cannot be determined that the parameters were met, contact RDMR-AED for corrective action or disposition.				

AIRCRAFT INSPECTION CHECKSHEET			TYPE OF INSP (Daily, Intermediate, etc.) SPECIAL	PAGE NO. 20.1	NO. OF PAGES 28
AIRCRAFT AND SERIAL NO.			INSPECTION NO.	DATE OF INSPECTION	
AREA NO.	REQUIREMENT EVERY	ITEM		STATUS	RECORDED ON WORKSHEET
	m.	Recovery of damaged OH-58 A/C Helicopter may further compromise the structural integrity of the victim helicopter. The damaged helicopter may not be approved for return to flight status without additional engineering evaluation and possible depot level inspections. Post recovery personnel should visually identify the areas of damage, record recovery flight data, and contact RDMR-AED for corrective action to return the recovered helicopter to flight status or for disposition of the recovered damaged helicopter.			

AIRCRAFT INSPECTION CHECKSHEET		TYPE OF INSP (Daily, Intermediate, etc.) SPECIAL	PAGE NO. 21	NO. OF PAGES 28	
AIRCRAFT AND SERIAL NO.		INSPECTION NO.		DATE OF INSPECTION	
AREA NO.	REQUIREMENT EVERY	ITEM		STATUS	RECORDED ON WORKSHEET
1	EVERY 25 (± 2.50) HOURS OR 30 DAYS, WHICHEVER OCCURS FIRST, ACCOMPLISH THE FOLLOWING: **a.** Perform preventative maintenance checks and services on the nickel-cadmium battery every 120 days. Refer to TM 55-1500-345-23, and TM 1-1500-344-23. **b.** Perform battery check inspection (Not applicable if battery tray is installed). AFTER AIRCRAFT HAS REMAINED INACTIVE FOR SEVEN CONSECUTIVE DAYS. Process the aircraft into the appropriate storage category (refer to Appendix E).				
	Deleted				
4 and 6	EVERY 25 HOURS **a.** Visually inspect tail rotor driveshaft and bearings. (This inspection applicable with or without MWO 55-1520-228-50-25 incorporated.) **b.** Inspect tailboom P/N 206-032-004-105 for loose or missing rivets, and skin cracks at the rivets securing the gearbox support casting to the tailboom skin immediately forward of the tail rotor gearbox. **c.** Inspect tailboom P/N 206-032-004-105 for cracks in the tail rotor gearbox support casting by removing the tail cone and visually inspect interior of casting, particularly the web areas for cracks. Removal of the tail rotor gearbox is not required.				
3	**d.** At each transmission oil sampling — drain, flush and replace transmission oil if water contamination is present or suspected.				
6	**e.** Purge lubricate improved tail rotor hub trunnion. After compliance with MWO 55-1520-228-50-25. **f.** A torque check is required after 25 flight hours any time the tail rotor disk pack coupling P/N 32721-1 has been disconnected or replaced.				
3, 4 and 6	EVERY 50 (±5) HOURS **NOTE** If engine Inlet Barrier Filter (IBF) system is installed, clean engine compressor at 150 (±5) hours. **a.** Clean engine compressor. Refer to TM 55-2840-241-23. **b.** Remove transmission oil cooler hose and inspect hose and radiator for foreign object restriction of air flow.				

AIRCRAFT INSPECTION CHECKSHEET			TYPE OF INSP (Daily, Intermediate, etc.) SPECIAL	PAGE NO. 22	NO. OF PAGES 28
AIRCRAFT AND SERIAL NO.			INSPECTION NO.	DATE OF INSPECTION	
AREA NO.	REQUIREMENT EVERY	ITEM		STATUS	RECORDED ON WORK-SHEET
		c. Saturate battery tray felt pad in a solution of boric acid and water (only if battery tray and felt pad are installed).			
		d. Perform engine spectrometric analysis on T63-A-720 engine without 3 micron filter installed. Refer to TB 43-0211. If aircraft is equipped with a 3 micron filter as directed by MWO 1-1520-228-50-44. No oil analysis is required.			
3		50 (±5) HOURS AFTER MAIN ROTOR PITCH HORN/GRIP INSTALLATION			
		Retorque nuts attaching main rotor pitch from horn to grip. Refer to paragraph 5-22.			
3		50 (±5) HOURS AFTER ENGINE INSTALLATION			
		Retorque nuts attaching engine mounts to airframe. Refer to paragraph 2-308.			
3		EVERY 100 (±10) HOURS:			
		a. Inspect servo actuators, serial numbers 8383 through and including serial number 9318, for cracks on aft end of piston rod between jamnut on rod end and valve housing.			
		NOTE The above special inspection is not required on those servo cylinders have an A suffix after the serial number.			
		b. Inspect servo actuator sequence valve for excessive leakage. Refer to paragraph 7-7.			
		c. Visually inspect pitch change links P/N 206-010-360-3 using a 3X magnifying glass for cracks and corrosion on outer surfaces of swaged ends. Removal not required.			
		d. Deleted.			
5		EVERY 120 CALENDAR DAYS, ACCOMPLISH THE FOLLOWING:			
		a. Perform preventive maintenance checks and services and VR check on the nickel-cadmium battery. Refer to TM 11-6140-203-14-2.			
		b. Check and adjust voltage regulator. Refer to TM 1-1500-204-23.			
		c. Perform battery quick-disconnect inspection. Refer to paragraph 9-27.			
		d. Using a flashlight and mirror, inspect through refueling port for missing or damaged umbrella check valve on top of boost pump housing. Inspection should be performed with 250 lbs or less of fuel. Replace umbrella check value IAW Task 2-11, TM 55-2915-335-30&P. For OH-58 A/C reove access panel behind the passenger seats (TM 55-1520-228-23P, figure 25, item 9) and fuel cell access panel (TM 55-1520-228-23P, figure 90, item 89) to accomplish this inspection.			

AIRCRAFT INSPECTION CHECKSHEET		TYPE OF INSP (Daily, Intermediate, etc.) SPECIAL	PAGE NO. 23	NO. OF PAGES 28	
AIRCRAFT AND SERIAL NO.		INSPECTION NO.		DATE OF INSPECTION	
AREA NO.	REQUIREMENT EVERY	ITEM		STATUS	RECORDED ON WORK-SHEET
3	100 (± 10) HOURS AFTER INSTALLATION OF PILLOW BLOCK RETENTION BOLTS AND NUTS OR INSTALLATION OF A NEW OR OVERHAULED MAIN ROTOR HUB ASSEMBLY	Inspect pillow block retention bolts and nuts for security. If slippage has occurred, replace hardware. If slippage has not occurred, retorque nuts to proper torque limits IAW paragraph 5-84, depending on type of hardware installed.			
4 and 5	100 (± 10) HOURS AFTER SELF-SEALING AND NONSELF-SEALING HOSES AND/OR HOSE CLAMPS ARE REPLACED OR INSTALLED (NOT APPLICABLE IF MWO 55-1520-228-30-32 HAS BEEN INCORPORATED)	Retorque hose clamps. Refer to table 7-3, TM 1-1500-204-23.			
		EVERY 100 HOURS INSPECT THE TAIL BOOM ATTACHMENT FITTINGS ON THE TAILBOOM AND AIRFRAME SIDE FOR CORROSION, CRACKS, AND LOOSE RIVETS. Pay particular attention to the following two locations:			
		a. Lower left tailboom attachment fitting. Look for cracks in rivet area between fitting and intercostal.			
		b. Cracking in AFT fuselage frame in upper right area (1 to 2 o'clock position looking forward). Check mount bolts for torque stripe alignment.			
5	AFTER MAINTENANCE TEST FLIGHT AS A RESULT OF TAILBOOM INSTALLATION RETORQUE TAILBOOM ATTACHMENT BOLTS (375-415 IN-LBS).				
5	100 (±10) HOURS AFTER INSTALLATION OF TAILBOOM RETORQUE TAILBOOM ATTACHMENT BOLTS (375-415 IN-LBS).				
3	20 (±5) HOURS AFTER SERVOACTUATOR INSTALLATION	**a.** Retorque trunnion plate nuts.			
		b. Retorque bearing plate nuts.			
4	EVERY 150 (± 5) HOURS (For engines with the Inlet Barrier Filter system installed)	Clean engine compressor. Refer to TM 55-2840-241-23.			
4	150 (± 15) HOURS OR EVERY SIX CALENDAR MONTHS, WHICHEVER OCCURS FIRST	Remove, disassemble, inspect, and lubricate the engine-to-transmission driveshaft. (Not applicable to P/N SKCP2348-5).			
4	EVERY 300 (± 30) HOURS OR 12 CALENDAR MONTHS, WHICHEVER OCCURS FIRST	**a.** Replace fuel pump filter element. Refer to TM 55-2840-241-23.			
		b. Clean fuel control filter assembly. Refer to TM 55-2840-241-23.			
3		**c.** Main rotor mast (inside diameter) for corrosion.			
		d. Clean and inspect PC filter assembly. Refer to TM 55-2840-241-23.			
		e. Remove and replace airframe mounted fuel filter element. After compliance with MWO 1-1520-228-50-48.			

AIRCRAFT INSPECTION CHECKSHEET		TYPE OF INSP (Daily, Intermediate, etc.) SPECIAL	PAGE NO. 24	NO. OF PAGES 28	
AIRCRAFT AND SERIAL NO.		INSPECTION NO.	DATE OF INSPECTION		
AREA NO.	REQUIREMENT EVERY	ITEM		STATUS	RECORDED ON WORKSHEET
		f. Test engine fuel pump bypass valve. Refer to TM 55-2840-241-23. **g.** Deleted. **h.** Bleed (purge) air from entire fuel system in the following sequence: **(1)** At the airframe mounted fuel filter. After compliance with MWO 1-1520-228-50-48. **(2)** At the engine fuel pump filter. Refer to TM 55-2840-241-23. **(3)** At the engine nozzle. Refer to TM 55-2840-241-23. **i.** Deleted.			
		Deleted.			
3		600 HOURS AFTER (INITIAL) INSTALLATION OF MAIN ROTOR TENSION/TORSION STRAP ASSEMBLIES **NOTE** This inspection not required on 206-011-100-131 or -143 main rotor hub assemblies. **a.** Remove main rotor hub and blade assembly for disassembly INSPECTION. **b.** Perform complete inspection of straps, fittings, and pins. Refer to text for requirements. **c.** Deleted. **d.** Verify records. **e.** Reassemble using corrosion protection procedures. Refer to text for requirements. **NOTE** The preceding special inspection shall be accomplished upon accumulation of 600 hours operating time since new, since last overhaul, or since replacement of tension/torsion strap assemblies, whichever is greater. Main rotor hub assemblies may be inspected at the scheduled periodic or phased inspection nearest the 600 hours.			

AIRCRAFT INSPECTION CHECKSHEET			TYPE OF INSP (Daily, Intermediate, etc.) SPECIAL	PAGE NO. 24.1	NO. OF PAGES 28
AIRCRAFT AND SERIAL NO.			INSPECTION NO.	DATE OF INSPECTION	
AREA NO.	REQUIRE-MENT EVERY	ITEM		STATUS	RECORDED ON WORKSHEET
3	EVERY 600 HOURS SINCE LAST INSPECTION, SINCE NEW, OR SINCE MAIN ROTOR HUB ASSEMBLY OVERHAUL Remove main rotor trunnion bearing sleeves and magnetic particle inspect trunnion P/N 206-011-113-1. (This inspection not required on main rotor trunnion P/N 206-011-113-103). **NOTE** **This inspection may be accomplished at the phase (300 hrs) inspection nearest the 600 hours. When time due or trunnion P/N is unknown, accomplish at next scheduled phase.** **NOTE** **Records of inspection should be maintained with the component to avoid repeat inspections. The records should indicate when the next inspection is due in terms of operating hours on the component so that the information is not lost when the component is separated from the aircraft. For the main and tail rotor hub, compliance and next time of the inspection will be recorded on DA Form 2408-16 (or in the continuation DA Form 2408-15) in terms of operating time on the component. For the main rotor mast and main driveshaft which do not normally have a DA Form 2408-16, maintain local records with the component when removed using data from the losing aircraft DA Form 2408-18. When the component is installed on an aircraft, the airframe hours that the next inspection is due will be entered in block 8 of the aircraft DA Form 2408-18. If record of the inspection is available, the special inspection at time of transfer to another aircraft is not required.**			
6	Tail rotor blades serial number TLL8000 and below, with operating time of 900 hours or more, shall be removed from service and replaced.				
3	EVERY 1200 HOURS Main rotor mast removed for disassembly and inspection.				
6	Remove tail rotor hub assembly and perform complete disassembly inspection, fluorescent penetrant inspect yoke, trunnion, and bearing housings. Verify records, center trunnion, and balance tail rotor assembly. Not required after compliance with MWO 55-1520-228-50-25.				

AIRCRAFT INSPECTION CHECKSHEET			TYPE OF INSP (Daily, Intermediate, etc.) SPECIAL	PAGE NO. 24.2	NO. OF PAGES 28
AIRCRAFT AND SERIAL NO.			INSPECTION NO.	DATE OF INSPECTION	
AREA NO.	REQUIREMENT EVERY	ITEM		STATUS	RECORDED ON WORK-SHEET
	Swashplates with more than 1200 hrs time must have the support inspected every 50 acft hours. I/A/W OH-58-94-ASAM-10 every fifty hours. **a.** Raise collective control to gain access to the base of the swashplate support assembly. **b.** Thoroughly clean the base using solvent PD680. **c.** Using a 10X magnifying glass, visually inspect the full circumference of the fillet radius where the cylindrical (slider) portion joins the support base. This area is directly below area C in TM 55-1520-228-23, Fig 5-48. Pay particular attention to the aft side of the swashplate and support assembly. **d.** If no crack is found, lower the collective and return acft to service. **e.** If crack is suspected, confirm by performing fluorescent penetrant inspection. **NOTE** The 50 hour inspection criteria is for swashplate and support with “more” than 1200 hours.				

AIRCRAFT INSPECTION CHECKSHEET			TYPE OF INSP (Daily, Intermediate, etc.) SPECIAL	PAGE NO. 25	NO. OF PAGES 28
AIRCRAFT AND SERIAL NO.			INSPECTION NO.	DATE OF INSPECTION	
AREA NO.	REQUIREMENT EVERY	ITEM		STATUS	RECORDED ON WORKSHEET
		NOTE This inspection applies after MWO 55-1520-228-50-25 has been accomplished. The preceding special inspection shall be accomplished at the scheduled phased inspection nearest the 1200 hours.			
2	**SIX MONTHS**				
		a. Inspect portable fire extinguisher. Refer to TM 1-1500-204-23 series.			
		b. Drain hydraulic reservoir and inspect inside bottom for corrosion. Refer to paragraph 7-56. Inspect drained hydraulic fluid for moisture or contamination. Flush in accordance with paragraph 7-7 if evidence of moisture, or other contamination, or if bottom of reservoir is corroded.			
		c. Inspect and test connector receptacle (ground) in accordance with TM 1-1500-204-23 series.			
		d. Inspect and check refueling receiver for grounding strap and proper ground.			
2	**EVERY 12 MONTHS**				
		a. Check magnetic standby compass for compensation. Refer to paragraph 8-224.			
		b. Check gyromagnetic compass set (AN/ASN43) for accuracy. Compensate if necessary. Refer to TM 11-6605-202-12.			
		c. Delete.			
		d. Inspect pylon isolation mount (all P/N's) for bonding separation, corrosion, and deterioration of rubber components. (Remove from aircraft.)			
All Areas	**12 MONTHS, OR WHENEVER HELICOPTER IS TRANSFERRED, RECEIVED, PLACED IN STORAGE, OR REMOVED FROM STORAGE**				
		Check and account for all inventoried property (not required while helicopter is in storage). Refer to TM 1-1500-204-23 series.			

AIRCRAFT INSPECTION CHECKSHEET			TYPE OF INSP (Daily, Intermediate, etc.) SPECIAL	PAGE NO. 26	NO. OF PAGES 28
AIRCRAFT AND SERIAL NO.			INSPECTION NO.	DATE OF INSPECTION	
AREA NO.	REQUIREMENT EVERY	ITEM		STATUS	RECORDED ON WORKSHEET
2	**EVERY 12 MONTHS OR NEAREST SCHEDULED INSPECTION ACCOMPLISH THE FOLLOWING:**				
	Inspect and test OAT/FAT gage. Refer to TM 1-1500-204-23 series.				
2	**EVERY 24 MONTHS OR NEAREST SCHEDULED INSPECTION ACCOMPLISH THE FOLLOWING:**				
	a. Perform functional check of pitot-static system and instruments.				
	b. First aid kit inspection. Refer to TM 1-1500-204-23 series.				
All Areas	**24 MONTHS**				
	Weigh aircraft and perform weight and balance records check. Refer to paragraph 1-44.				
	LIGHTNING STRIKE INSPECTION				
	a. General requirements when helicopter is struck by lightning:				
	(1) Inspect fuselage interior and exterior, landing gear, rotor system, and static ground wire for burn marks, cracks, pitting, or signs of high temperature stress; to determine lightning entry and exit points.				
	(2) Trace path of lightning strike to extent possible using a magneto-meter.				
	(3) Check magnetic compass for accuracy (degree of inaccuracy may serve as an indicator of severity of strike).				
	(4) Inspect wiring in tunnel areas and exposed areas for burns.				
	(5) Inspect antennas for burns and pitting.				
	(6) Inspect all electrically operated components and lighting systems for damage.				
	(7) Inspect communications and navigation equipment for damage.				

AIRCRAFT INSPECTION CHECKSHEET			TYPE OF INSP (Daily, Intermediate, etc.) SPECIAL	PAGE NO. 27	NO. OF PAGES 28
AIRCRAFT AND SERIAL NO.			INSPECTION NO.	DATE OF INSPECTION	
AREA NO.	REQUIREMENT EVERY	ITEM		STATUS	RECORDED ON WORKSHEET
	(8) If the preceding steps (1) through (7) reveal major damage has occurred, proceed as follows: **(9)** Bench test all avionics and electrical systems and components. **(10)** Perform a continuity check on all wiring and cables. **(11)** Perform a Voltage Standing Wave Ratio (VSWR) check on all antennas, antenna cables, and connectors. **(12)** Perform specific inspections/replacements as required. **(13)** Perform a ground run operational check on the aircraft. Functionally check the flight control system, and all avionics, electrical, lighting, communication, and navigation systems. **(14)** Repair any damage and replace damaged components as required using standard maintenance practices. **b.** Specific requirements whenever lightning strike is evident on main rotor system. **(1)** inspect blades for damage such as burns, pitting, skin separation, etc. If damage is evident, locally scrap damaged blade(s). **(2)** Remove hub assembly and return for overhaul. **(3)** Replace all bearings (or next higher assembly if required in the fixed and rotating control system located above the servo-cylinders. **(4)** Remove swashplate assembly, mast assembly and transmission assembly, and return for overhaul. **(5)** Check driveshafts for residual magnetism. If magnetized or damaged replace driveshafts and remove engine and return for overhaul. **c.** Specific requirements when lightning strike is evident on tail rotor system. **(1)** Inspect blades for damage such as burns, pitting, skin separation, etc. If damage is evident, locally scrap damaged blade(s). **(2)** Tail rotor hub, scrap locally. **(3)** Remove and condemn pitch change links, and crosshead bearing.				

AIRCRAFT INSPECTION CHECK-SHEET		TYPE OF INSP (Daily, Intermediate, etc.) SPECIAL	PAGE NO. 28	NO. OF PAGES 28	
AIRCRAFT AND SERIAL NO.		INSPECTION NO.	DATE OF INSPECTION		
AREA NO.	REQUIRE-MENT EVERY	ITEM		STATUS	RECORDED ON WORKSHEET
		(4) Inspect crosshead and control rod for any indications of aging. Replace if necessary.			
		(5) Remove 90 degree gearbox and return for overhaul.			
		(6) Replace any magnetized tail rotor driveshaft hanger bearings.			
		(7) Check disc assembly, blower assembly, splined adapter, freewheeling assembly, main driveshaft and tail rotor driveshaft couplings for residual magnetism. Replace as necessary.			
		(8) Inspect oil cooler and oil cooler filter assembly for damage. Replace as necessary.			
		(9) If previous drive train items show magnetism, remove transmission and return for overhaul.			
		(10) If freewheeling assembly shows magnetism remove engine assembly and return for overhaul.			
		(11) Inspect engine mounts, support installation, pylon, and mount installation, isolation pylon for damage. Replace if necessary.			
4		Whenever operating in heavy sand or dust conditions, or whenever operating aircraft from unprepared surfaces.			
		a. Deleted.			
		b. Inspect particle separator to induction fairing seal and firewall to induction fairing seal for condition. Replace defective seal.			
		c. Inspect engine plenum chamber for freedom from air leaks.			
		EVERY 10 HOURS UNTIL 50 HOURS AFTER COMPLIANCE WITH MWO 1-1520-228-50-48 AND UNTIL ALL CONTAMINANTS HAVE BEEN FLUSHED FROM THE SYSTEM.			
		a. Inspect fuel control filter. Refer to TM 55-2840-241-23.			
		b. Bleed (purge) air from fuel system at engine nozzle. Refer to TM 55-2840-241-23.			

AIRCRAFT INSPECTION CHECKSHEET			TYPE OF INSP (Daily, Intermediate, etc.) SPECIAL	PAGE NO. 28.1	NO. OF PAGES 28
AIRCRAFT AND SERIAL NO.			INSPECTION NO.	DATE OF INSPECTION	
AREA NO.	REQUIREMENT EVERY	ITEM		STATUS	RECORDED ON WORKSHEET
	EVERY 25 HOURS UNTIL 50 HOURS AFTER COMPLIANCE WITH MWO 1-1520-228-50-48 AND UNTIL ALL CONTAMINANTS HAVE BEEN FLUSHED FROM FUEL SYSTEM. **a.** Inspect engine fuel pump filter. Refer to TM 55-2840-241-23. **b.** Test the engine fuel pump bypass valve. Refer to TM 55-2840-241-23. **c.** Bleed (purge) air from entire fuel system in the following sequence: **(1)** At airframe mounted fuel filter (after compliance with MWO 1-1520-228-50-48). **(2)** At engine fuel pump filter. Refer to TM 55-2840-241-23. **(3)** At engine nozzle. Refer to TM 55-2840-241-23. **EVERY 24 MONTHS OR NEAREST SCHEDULED INSPECTION.** **a.** Inspect entire fuel system (sump removed) for contamination and proper operation as follows: **(1)** Inspect fuel cell interior for damage, deterioration or activation. Refer to paragraph 10-5.1. **(2)** Inspect fuel shutoff valve for foreign material in fuel path. Refer to paragraph 10-44. **(3)** Inspect fuel shutoff valve for proper rigging. Refer to paragraph 10-45. **(4)** Test fuel low level switch. Refer to paragraph 10-26. **(5)** Test fuel boost pump and fuel pressure switch for proper operation. Refer to paragraphs 9-77 and 9-162. **(6)** Inspect fuel receiver and lanyard for damage (plastic coating on lanyard can fall into fuel cell). **(7)** Test fuel filter switch for proper operation. **b.** If fuel sump contamination is found, clean and inspect fuel system in accordance with TM 55-1520-228-23, Chapter 10. **c.** Deleted.				

AIRCRAFT INSPECTION CHECKSHEET			TYPE OF INSP (Daily, Intermediate, etc.) SPECIAL	PAGE NO. 28.2	NO. OF PAGES 28
AIRCRAFT AND SERIAL NO.			INSPECTION NO.	DATE OF INSPECTION	
AREA NO.	REQUIREMENT EVERY	ITEM		STATUS	RECORDED ON WORKSHEET
		d. Test and calibrate Fuel Quantity Indicating System. **e.** Deleted. **10 HOURS AFTER CLEANING FUEL SYSTEM.** **a.** Inspect engine fuel pump filter. Refer to TM 55-2840-241-23. **b.** Inspect engine fuel control filter. Refer to TM 55-2840-241-23. **WHENEVER WATER OR CONTAMINATION IS PRESENT IN FUEL CELL** Inspect complete fuel system and airframe mounted fuel filter (after compliance with MWO 1-1520-228-50-48) for contamination and/or presence of water. **BLEEDING OF ENTIRE FUEL SYSTEM REQUIRED.** **a.** Fuel lines have been opened anywhere between boost pump and fuel nozzle. This includes fuel pressure sensing lines as well as main fuel path. **b.** Engine flameout due to fuel exhaustion. **c.** Engine has been motored without fuel in tank. **d.** Engine has been shut down with emergency fuel shutoff. **e.** When any filter. drain or bleed plug (except sump valve) has been loosened or opened without boost pump ON. **ANY TIME ENGINE EXTERNAL SCAVENGE OIL FILTER INDICATOR PIN HAS BEEN ACTUATED (POPPED) (AFTER COMPLIANCE WITH MWO 1-1520-228-50-48).** **NOTE** If filter bypass (red button) is showing, reset indicator, ground run engine, and reinspect. If indicator is not showing after ground run, aircraft may be released for operations. If indicator is showing after ground run, change engine oil and replace scavenge filter element. **SWASHPLATE SUPPORT AT 1200 (±150) HOURS AND EVERY 50 (±5) HOURS THEREAFTER.** Inspect swashplate support Refer to paragraph 5-148.			

AIRCRAFT INSPECTION CHECKSHEET			TYPE OF INSP (Daily, Intermediate, etc.) SPECIAL	PAGE NO. 28.3	NO. OF PAGES 28
AIRCRAFT AND SERIAL NO.			INSPECTION NO.	DATE OF INSPECTION	
AREA NO.	REQUIRE-MENT EVERY	ITEM		STATUS	RECORDED ON WORKSHEET
		NOTE Whenever PDU mount support or launcher adapter is removed or reinstalled, the system must be boresighted. Deleted **ANYTIME TRANSMISSION ECTERNAL OIL FILTER INDICATOR PIN HAS BEEN ACTUATED (POPPED) (AFTER COMPLIANCE WITH MWO 1-1520-228-50-51).** **NOTE** If filter bypass (red button is showing, reset indicator, ground run transmission and reinspect. If indicator is not showing after ground run, aircraft may be released for operations. If indicator is showing after ground run, change transmission oil and replace filter element and repeat ground run. **WHEN TRANSMISSION OIL IS CHANGED AND WHEN TRANSMISSION IS REPLACED.** Clean filter bowl and replace filter element (if external filter is installed).			

SECTION V OVERHAUL AND RETIREMENT SCHEDULE

1-51. INTRODUCTION.

a. Overhaul and retirement schedule. This section lists units of operating equipment that are to be overhauled or retired at the period specified. Removal of equipment for overhaul may be accomplished at the inspection nearest the time when overhaul is due unless otherwise specified in TM 1-1500-328-23.

b. Overhaul interval. The maximum authorized operating time or calendar interval of parts prior to removal for overhaul at category of maintenance authorized in accordance with Maintenance Allocation Chart.

c. Retirement Schedule. The operating time or calendar interval specified for removal, condemnation, and disposal of parts in accordance with applicable directives.

WARNING

TM 1-1520-328-23 should be referred to concerning mutilation/destruction of items when they have reached the established life expectancy (finite life) before the items are forwarded for property disposal.

NOTE

Items replaced on a calendar basis (for the purpose of overhaul or retirement) will not be listed on DA Form 2408-16, Component Installation and Removal Record, but will be listed on DA Form 2408-18, Equipment Inspection List, for scheduling purposes.

OVERHAUL AND RETIREMENT SCHEDULE Model OH-58A/C Helicopter

Area	Part Number and Item	Overhaul Interval (Hours)	Retirement Interval (Hours)
2 602C0001-8	Pilot and Copilot Seat Covers		24 Months
Main Rotor			
3 206-010-102-9	Grip Assembly		4800
3 206-010-102-013	Grip Assembly		4800
3 206-010-102-121	Grip Assembly		4800
3 206-010-123-1	Pin, Strap Retainer		400
3 206-010-123-3	Pin, Strap Retainer		1200
3 206-010-155-7	Fitting Assembly		400
3 206-010-155-15	Fitting Assembly		1200
3 206-011-140-1	Fitting Assembly		1200
3 206-011-100-1	Hub Assembly	1200	
3 206-011-100-5	Hub Assembly	1200	
3 206-011-100-23	Hub Assembly	1200	
3 206-011-100-131	Hub Assembly		
3 206-011-100-143	Hub Assembly		
3 206-011-113-1	Trunnion Assembly		2400
3 206-011-113-103	Trunnion Assembly		4800
3 206-011-147-1	Strap Assembly		1200
3 206-011-147-5	Strap Assembly		1200
3 206-011-154-101	Strap Assembly		1200
3 206-011-154-105	Strap Assembly		1200

OVERHAUL AND RETIREMENT SCHEDULE Model OH-58A/C Helicopter — Continued

Area		Part Number and Item	Overhaul Interval (Hours)	Retirement Interval (Hours)
3	206-010-169-1	Latch Bolt		1200
3	206-010-169-3	Latch Bolt		1200
3	206-011-250-3	Blade Assembly		3600
3	206-011-250-113	Blade Assembly		3600
Main Rotor Controls				
3	206-001-194-1 A /C	Collective Rigid Connecting Link		4800
3	206-001-254-11 A /C	Collective Rigid Connecting Link		4800
3	206-010-407-1	Collective Idler Link Assembly		4800
3	206-010-450-5	Swashplate and Support Assembly	ON CONDITION	
3	206-010-450-7	Swashplate and Support Assembly	ON CONDITION	
3	206-010-450-9	Swashplate and Support Assembly	ON CONDITION	
3	206-010-452-1	Support, Swashplate Assembly		4800
3	206-010-454-1	Sleeve, Swashplate Assembly		4800
3	206-010-467-1	Collective Lever Assembly		4800
3	206-010-452-5	Support, Swashplate Assembly		4800
3	206-010-452-109	Support, Swashplate Assembly		4800
3	206-010-454-5	Sleeve, Swashplate Assembly		4800
3	206-101-454-109	Sleeve, Swashplate Assembly		4800
Engine				
4	206-061-432-1 A	Blower Assembly Oil Cooler	ON CONDITION	
4	206-061-432-39 C	Blower Assembly Oil Cooler	ON CONDITION	
4	6874204 A	Engine Turboshaft	750	
4	6874201 A	Engine, Turboshaft (Suffix B Serial Numbers Only)	1000	
4	6887191	Engine, Turboshaft	1800	
	Deleted			
Tail Rotor and Drive System				
6	206-010-750-5	Blade Assembly		1200
6	206-010-750-5	Blade Assembly (Serial Numbers TLL8000 and below only)		900
6	206-010-750-109	Blade Assembly		1200
	206-016-201-111	Blade Assembly		2400
	206-011-803-5	Trunnion Assembly		2400
	206-011-812-5	Trunnion Assembly		Unlimited

OVERHAUL AND RETIREMENT SCHEDULE Model OH-58A/C Helicopter — Continued

Area	Part Number and Item	Overhaul Interval (Hours)	Retirement Interval (Hours)
206-011-819-101	Yoke Assembly		4800
206-040-400-7	Gearbox Assembly	ON CONDITION	
206-040-400-9	Gearbox Assembly	ON CONDITION	
206-040-402-003	Gearbox Assembly	ON CONDITION	
206-040-371-111 (SKCP2348-5)	Main Driveshaft Assembly		5000

NOTES

All retirement life components will have a Demil code of "L" and be mutilated.

1 The complete -131 and -143 hub assembly has no overhaul or retirement interval. It does contain retirement items listed on this schedule. For record keeping purposes the -131 and -143 hub assembly will be treated as a time change component but listed on a condition change DA Form 2408-16. Hub assemblies will be recorded on the aircraft time change DA Form 2408-16, with the lowest retirement life components as the driver for time change requirements.

2 Applies to any engines having the letter B as part of the suffix.

3 Not to exceed 8.5 years from the date of manufacture (shelf life), or 36 months from the date of opening the sealed cartridge container (installed life), or 10 installations and/or removals from the ejector rack. Explosive life is not additive and therefore cartridge replacement is required whenever any of these conditions are reached.

4 Main rotor hub assemblies P/N 206-011-100-131 or earlier may contain the 206-011-113-1 or -103 trunnion. The 206-011-100-143 hub assembly should only have the -103 trunnion. Replacement of main rotor trunnion P/N 206-011-113-1 has been controlled at overhaul of the main rotor hub. When operating time of the -1 trunnion is unknown due to no records, field units may replace the trunnion on P/N 206-011-100-131 hubs at 1200 hours since last main rotor hub overhaul. The P/N 206-011-100-23 or earlier hubs may be operated to next scheduled main rotor overhaul. When part number or serial number of the installed trunnion cannot be determined, the unit may be operated to next required special (magnetic particle) trunnion inspection.

CHAPTER 2
AIRFRAME

Structural repairs described in this chapter are intended for use in conjunction with TM 1-1500-204-23, General Aircraft Maintenance Manual. The damage limits provided in this chapter on bonded panels are not intended to red X the helicopter. The limits are to provide guidance for scheduling repair or replacement at the next scheduled maintenance interval. When damage limits, particularly bond voids in bonded panels are exceeded, the responsible maintenance authority will establish a recurring special inspection on the damaged area until the damage to the structure is corrected. If the damage is in the area that requires engineering authority for repair, engineering should be contacted in writing with a description of damage. If depot assistance will be required, unit should contact ATCOM, AMSAT-I-MDO, with your requirements. The limitations in the following note should be observed when performing structural repair on the airframe.

NOTE

Repair at AVUM is limited to minor sheet metal cracks, scratches, corrosion, and loose or missing hardware. These repairs can be accomplished using the airframe repairman's tool kit and portable hand tools. If any extensive damage occurs or major repair is required, repairs shall be accomplished by AVIM. Repair at AVIM is limited to repair of sheet metal cracks, scratches, corrosion holes, and loose or missing hardware. If major damage occurs requiring jigs and fixtures, repairs shall be accomplished by next higher maintenance level.

SECTION I FUSELAGE

2-1. FUSELAGE.

2-2. DESCRIPTION — FUSELAGE. The fuselage consists of three main sections; the forward section, which extends from the cabin nose to the bulkhead aft of the passenger compartment, the aft section, which extends from the bulkhead aft of the passenger compartment to the tailboom, and tailboom section. The forward section utilizes aluminum honeycomb and sheet metal structures for the major load carrying elements. The forward section provides for pilot and passenger seating, fuel cell enclosure, and pylon support. The aft section utilizes an aluminum and honeycomb semimonocoque construction and provides a deck for engine installation and a compartment under the engine deck for electrical equipment. Refer to table 2-1 for Repair Materials.

2-3. DOOR ASSEMBLIES—CABIN.

2-4. DESCRIPTION—DOOR ASSEMBLIES. Four entrance doors (1 and 2, figure 2-1A (1 and 2, figure 2-2 C) are provided for access to the cabin. The doors are of sheet metal construction with stretched acrylic windows. A latch assembly, which may be operated from either side, secures the doors in the closed position. In an emergency, doors may be jettisoned by pulling the emergency release handle on the inside of each door forward support. Door lock devices were incorporated by MWO 55-1500-204-30-1. They consist of a strap, fastener, and a stud to hold the inside door handles of the left and right rear doors, and the left front door, in the locked position when the helicopter is secured on the ground. Also, there are two door lock angles and a padlock for the outside of the right front door. The door vents have aluminum tubing. running through drilled holes in each vent.

2-5. INSPECTION — DOOR ASSEMBLIES.

a. Inspect door for cracks, dents or damage, and seals for condition and security. If crack in door is suspected, refer to TM 1-1520-254-23, Technical Manual Aviation Unit Maintenance (AVUM) and Aviation Intermediate Maintenance (AVIM) Manual Nondestructive Inspection Procedures for OH-58 Helicopter Series.

b. Check hinges for condition and wear: If crack in hinge is suspected, refer to TM 1-1520-254-23, Technical Manual Aviation Unit Maintenance (AVUM) and Aviation Intermediate Maintenance (AVIM) Manual Nondestructive Inspection Procedures for OH-58 Helicopter Series.

(1) Check crew door hinges for condition and wear. Lock for bent or broken spring (19, figure 2-3). Inspect washer detent (14) for elongation of pivot hole, and for mutilated detent edges. Inspect hinge-half (34) for loose rivets, for bent, twisted or cracked pivot point. Pin (20) shall not be bent. Pivot hole diameters shall not exceed 0.198 inch. Door hinge shall not bind or squeak. Ensure door is properly aligned with latches. Check doors for fore or aft looseness. Doors shall not rattle or jar loose at extremes of travel. Inspect supporting structure for cracking, distortion and tears. No cracking or tears permitted.

(2) Check passenger door hinges for condition and wear. Look for bent bolt (33), cracked or bent hinge-halves. No cracking or bending permitted. Door hinges shall not bind or squeak. Ensure doors align with latches without forcing door up or down. Pivot holes shall not exceed 0.198 inch diameter. Inspect supporting structure for cracking, distortion and team. No cracking or tears permitted. Check doors for excessive fore or aft loose-

ness. Door hinges shall be sufficiently tight to prevent door from rattling or jarring loose at extremes of travel.

(3) Inspect the pivot pin holes. The holes are serviceable if the largest diameter of the hole does not exceed.210 inches. If that dimension is larger, the door hinge pivot holes can be repaired if the holes can be re-bored to.375 inches (maximum) maintaining the original center.

(a) Remove door from aircraft.

(b) Carefully rebore the hole, maintaining the center, to prevent binding from misalignment of the hinge pins. (It might be necessary to fabricate a drill jig to locate the hole on the original center.)

(c) Using chemical conversion coating, alodine (38) the area in and around the new hole.

(d) Coat spacer, sleeve P/N NAS 42 DD6-8 with epoxy and press into hinge.

(e) Allow epoxy to dry and reinstall door.

c. Inspect snap vents for security in windows, cracks, and operation.

WARNING

Door assembly may open in flight and separate from aircraft if latch assembly is improperly adjusted.

CAUTION

Door assembly may open in flight if latch assembly is improperly adjusted. Armament will fire through door when door is open.

d. Inspect latches for broken or loose handles, loose mountings, proper latching, and adjustment.

Table 2-1. Repair Material

ITEM	DESCRIPTION	COMMERCIAL GAGE	DESIGNATION	SPECIFICATION
1	Aluminum Alloy Block	0.125	7075-T6	QQ-A-250/13
2	Aluminum Alloy Honeycomb	0.375	3.1 1/8 0.0007	MIL-C-7438
3	Aluminum Alloy Honeycomb	0.500	3.1 1/8 0.0007	MIL-C-7348
4	Aluminum Alloy Honeycomb	1.000	3.1 1/8 0.0007	MIL-C-7438
5	Aluminum Alloy Honeycomb	1.000	8.1 1/8 0.0020	MIL-C-7438
6	Aluminum Alloy Honeycomb	1.250	3.1 1/8 0.0007	MIL-C-7438
7	Aluminum Alloy Honeycomb	1.250	5.7 3/16 0.0020	MIL-C-7438
8	Aluminum Alloy Honeycomb	1.250	8.1 1/8 0.0020	MIL-C-7438
9	Aluminum Alloy Rod	7.500	2024-T351	QQ-A 225/6
10	Aluminum Alloy Sheet	0.008	2024-T3	QQ-A-250/5
11	Aluminum Alloy Sheet	0.012	2024-T3	QQ-A-250/5
12	Aluminum Alloy Sheet	0.016	2024-T42	QQ-A-250/5
13	Aluminum Alloy Sheet	0.016	7075-T6	QQ-A-250/13
14	Aluminum Alloy Sheet	0.016	2024-T3	QQ-A-250/5
15	Aluminum Alloy Sheet	0.020	2024-T3	QQ-A-250/5
16	Aluminum Alloy Sheet	0.020	2024-T42	QQ-A-250/5
17	Aluminum Alloy Sheet	0.025	2024-T3	QQ-A-250/5
18	Aluminum Alloy Sheet	0.025	2024-T42	QQ-A-250/5
19	Aluminum Alloy Sheet	0.032	2024-T3	QQ-A-250/5
20	Aluminum Alloy Sheet	0.032	2024-T42	QQ-A-250/5
21	Aluminum Alloy Sheet	0.032	7075-T6	QQ-A-250/13
22	Aluminum Alloy Sheet	0.032	5052-H34	QQ-A-250/8
23	Aluminum Alloy Sheet	0.040	2024-T42	QQ-A-250/5
24	Aluminum Alloy Sheet	0.040	6061	QQ-A-250/11
25	Aluminum Alloy Sheet	0.040	2024-T3	QQ-A-250/5
26	Aluminum Alloy Sheet	0.040	7075-T6	QQ-A-250/13
27	Aluminum Alloy Sheet	0.050	2024-T3	QQ-A-250/5
28	Aluminum Alloy Sheet	0.050	7075-T6	QQ-A-250/13
29	Aluminum Alloy Sheet	0.050	2024-T42	QQ-A-250/5
30	Aluminum Alloy Sheet	0.063	2024-T3	QQ-A-250/5
31	Aluminum Alloy Sheet	0.063	7075-T6	QQ-A-250/13
32	Aluminum Alloy Sheet	0.064	7075-T6	QQ-A-250/13
33	Aluminum Alloy Sheet	0.071	2024-T3	QQ-A-250/5
34	Aluminum Alloy Sheet	0.071	7075-T6	QQ-A-250/13
35	Aluminum Alloy Sheet	0.080	7075-T6	QQ-A-250/13
36	Aluminum Alloy Sheet	0.090	7075-T6	QQ-A-250/13
37	Acrylic Plastic Sheet	0.060		MIL-P-25690
38	Acrylic Plastic Sheet	0.100		MIL-P-25690
39	Acrylic Plastic Sheet	0.125		MIL-P-25690
40	Foam Nopcofoam		G304/G306	
41	Glass Fabric		Type A	
42	Glass Fabric		Type C	
43	Phenolic Sheet	1.000		
44	Phenolic Sheet	0.15625		
45	Rubber	0.125	Type A/Gr 40	MIL-R-6855
46	Steel, Corrosion Resistant	0.012	302	MIL-S-5059
47	Steel, Corrosion Resistant	0.015 321/347	Cond A	MIL-S-6721

Table 2-1. Repair Material — Continued

ITEM	DESCRIPTION	COMMERCIAL GAGE	DESIGNATION	SPECIFICATION
48	Steel, Corrosion Resistant	0.020	T1	MIL-S-6721
49	Steel, Corrosion Resistant	0.032 321/347	Cond A	QQ-S-766
50	Steel, Corrosion Resistant	0.040	301	MIL-S-5059
51	Steel, Corrosion Resistant	0.063	301	MIL-S-5059
52	Titanium Sheet	0.025		MIL-T-9046
53	Titanium Alloy Sheet	0.012	Type I	MIL-T-9046
54	Styrofoam			

e. Inspect the inside door handle locking straps, fasteners, and studs for damage or wear (figure 2-6).

f. Check the outside of right front door for the door lock angles. They should be free of cracks or damage (figure 2-8).

g. Inspect for proper installation/condition of door vent locks (precut aluminum tubing) (figure 2-9).

2-6. ADJUSTMENT — DOOR ASSEMBLIES.

a. Remove pin (8, figure 2-3).

b. Adjust roller assembly (9) clearance for **0.090 to 0.140** inch from the rear wall of the striker housing (1) with latch in closed position. Refer to figure 2-3, detail C.

c. Align hole in roller assembly (9) with slot in rod (10) and insert pin (8).

d. Peel shim (3) on striker (4) as required for smooth operation of the latch with as little door panel deflection as possible with no door rattle.

2-7. REMOVAL — DOOR ASSEMBLIES.

a. Open door and support to prevent damage.

b. Remove cotter pin (23, figure 2-3), nut (22), washers (12), belleville washers (21), plates (14), spacers (13), and bolt (11 or 33) from hinge points. Remove door assembly.

NOTE

Crew doors may be jettisoned for ease of maintenance instead of removing the bolt from hinge points.

NOTE

Plates (14) and bolt (11) are only on doors with hold open latch. Removed doors must have the helicopter serial number stenciled on the inside of the door if the door will be reinstalled. Doors are not interchangeable from one helicopter to another without adjustment.

2-8. REMOVAL — DOOR SEALS.

a. Remove blind type rivets from retainer plate.

b. Remove damaged seal and clean adhesive residue to bare metal.

WARNING

Acetone is extremely flammable and toxic to eyes, skin, and respiratory tract. Wear protective gloves and goggles/face shield. Avoid repeated or prolonged contact. Use only in well-ventilated areas (or use approved respirator as determined by local safety/industrial hygiene personnel). Keep away from open flames, sparks, hot surfaces or other sources of ignition.

c. Wipe area with a clean cloth dampened in acetone (C2) and wipe with clean dry cloth.

2-9. DISASSEMBLY — DOOR ASSEMBLIES.

a. Removal of crew door latch assembly.

NOTE

Disassemble latch only to the extent necessary for repair or replacement.

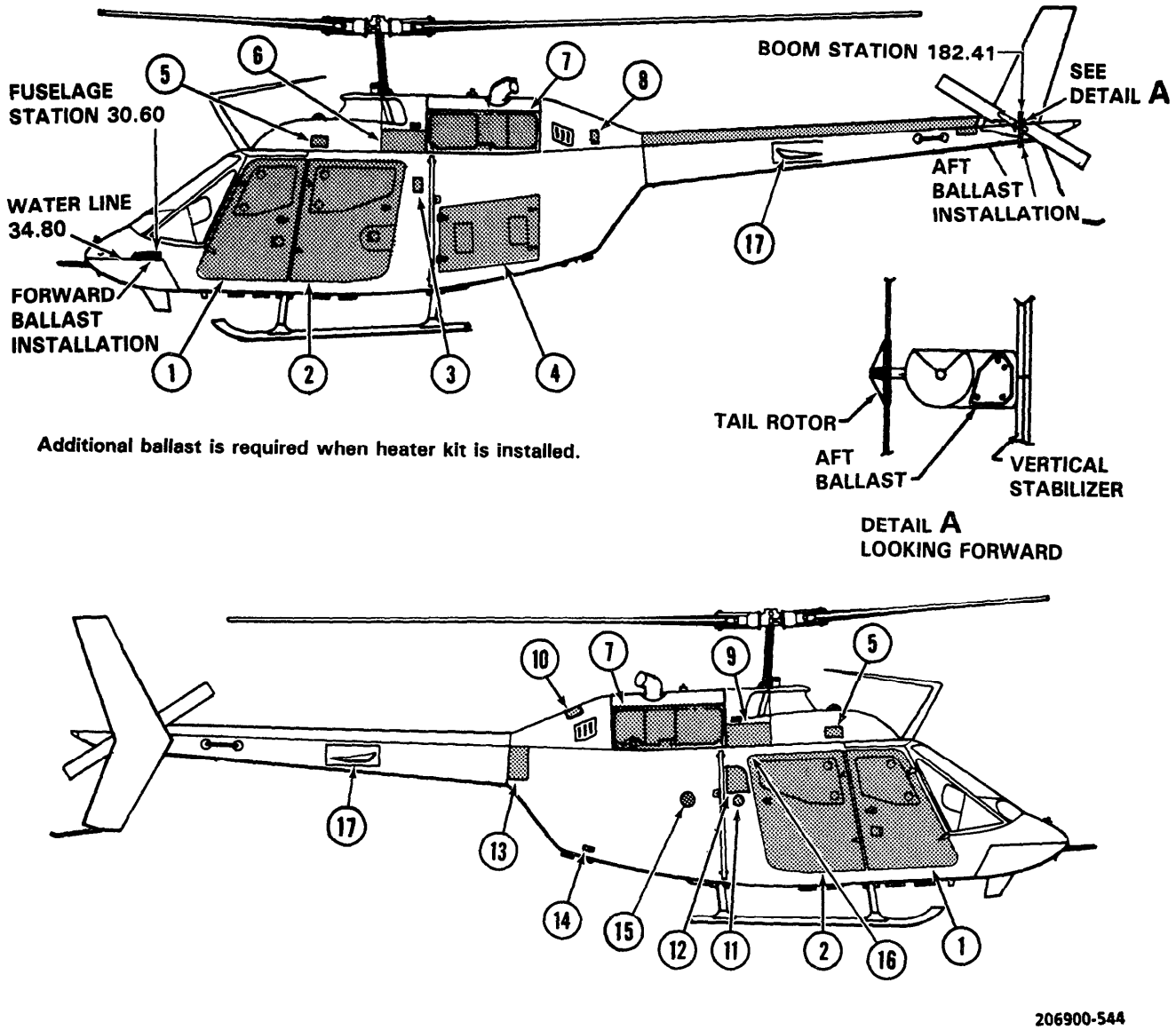

1. Crew Door
2. Passenger Door
3. Step Cover
4. Avionics Compartment Door
5. Forward Transmission Fairing Inspection Door
6. Transmission Induction Fairing Access Door
7. Engine Cowl Side Panel
8. Oil Tank Drain Access Door
9. Transmission Oil Level Access Door
10. Engine Oil Filler Cap Access Door
11. Fuel Tank Filler Cap
12. Access Panel Structural
13. Tailboom Inspection panel Structural
14. External Power Connector Access Door
15. Connector Receptacle (Ground)
16. Inside Panels
17. Horizontal Stabilizer Panels

Figure 2-1. Access Panels, Doors, and Ballast Installation

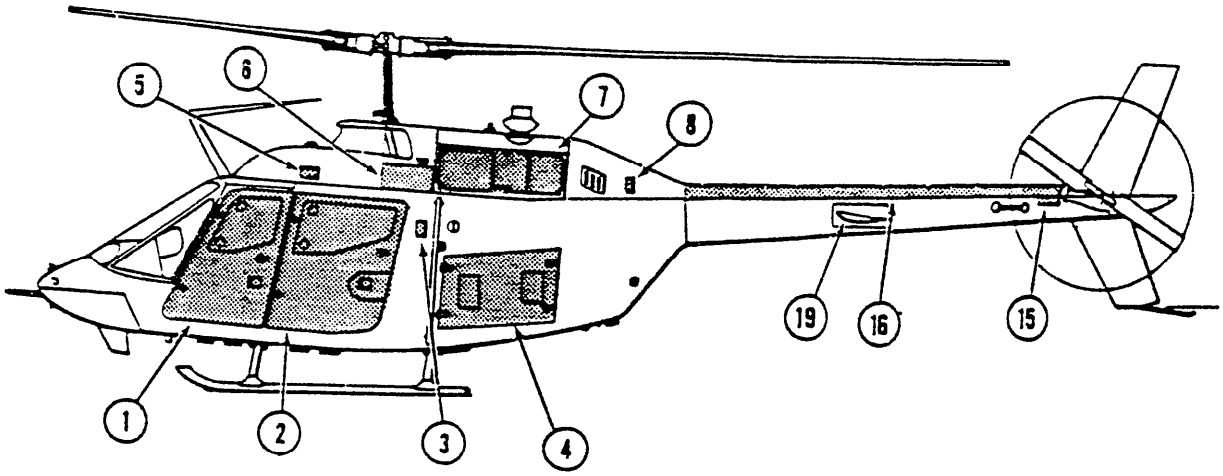

NOTE
FOR BALLAST INSTALLATION
SEE FIGURE 2-1.

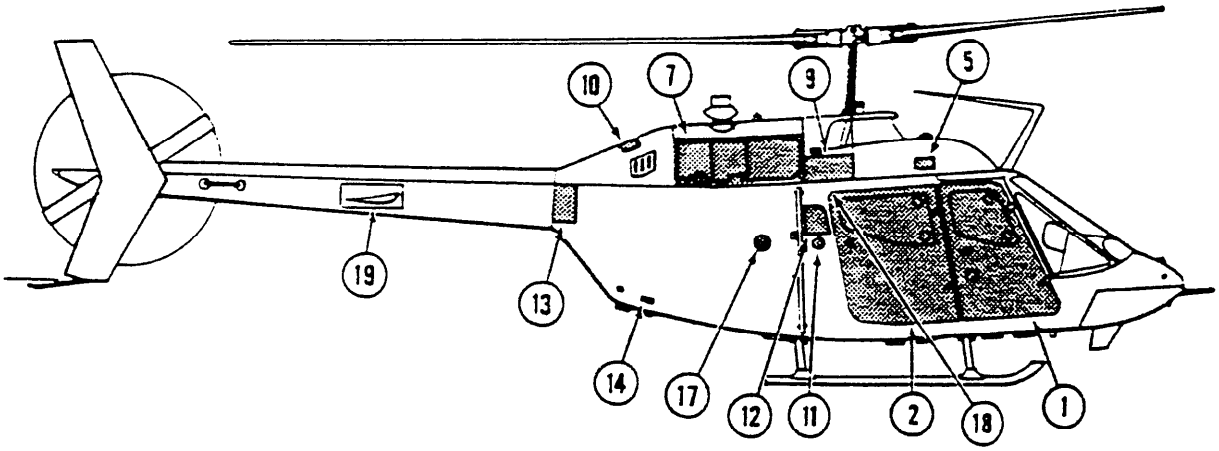

1. Crew Door
2. Passenger Door
3. Step Cover
4. Avionics Compartment Door
5. Forward Transmission Fairing Inspection Door
6. Transmission Induction Fairing Access Door
7. Engine Cowl Side Panel
8. Oil Tank Drain Access Door
9. Transmission Oil Level Access Door
10. Engine Oil Filler Cap Access Panel
11. Fuel Tank Filler Cap
12. Access Panel Structural
13. Tailboom Inspection Panel Structural
14. External Power Connector Access Door
15. Tailboom V/R Flight Controls Access Cover
16. Tail Rotor Driveshaft Cover
17. Connector Receptacle (Ground)
18. Inside Panel
19. Horizontal Stabilizer Panels

Figure 2-2. Access Panels and Doors C

Deleted Figure 2-2.1 Sheet 1 and 2

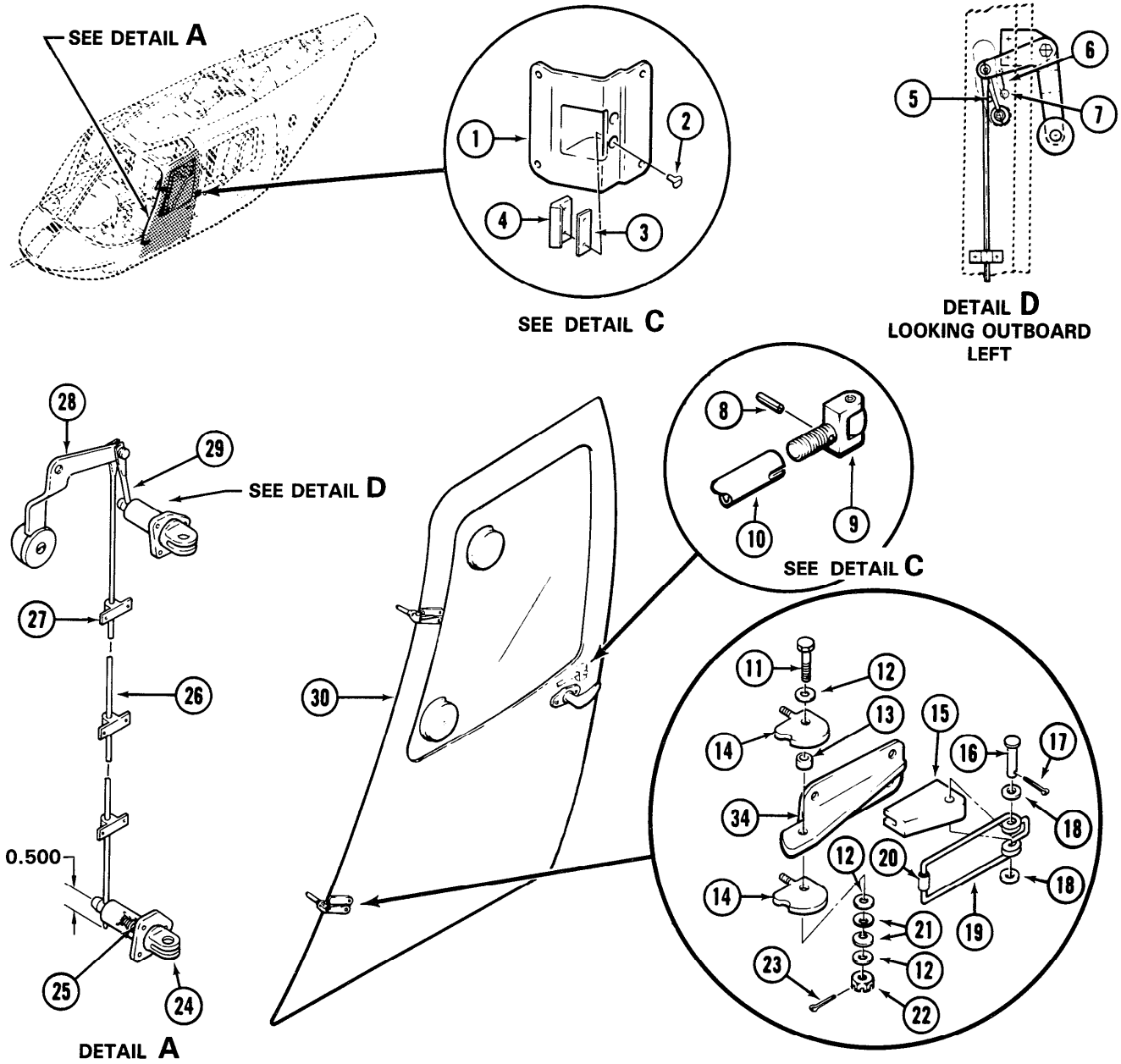

1. Striker Housing
2. Screw
3. Shim
4. Striker
5. Stop Screw
6. Lockwire
7. Screw
8. Pin
9. Roller Assembly
10. Rod
11. Bolt
12. Washer
13. Spacer
14. Plate
15. Adapter
16. Pin
17. Cotter Pin
18. Washer
19. Spring
20. Pin
21. Belleville Washer
22. Nut
23. Cotter Pin
24. Jettison Hinge
25. Spring
26. Rod
27. Rod Guide
28. Crew Jettison Handle
29. Rod
30. Crew Door
31. Passenger Door
32. Passenger Jettison Handle
33. Bolt
34. Hinge

Figure 2-3. Door Installation (Sheet 1 of 2)

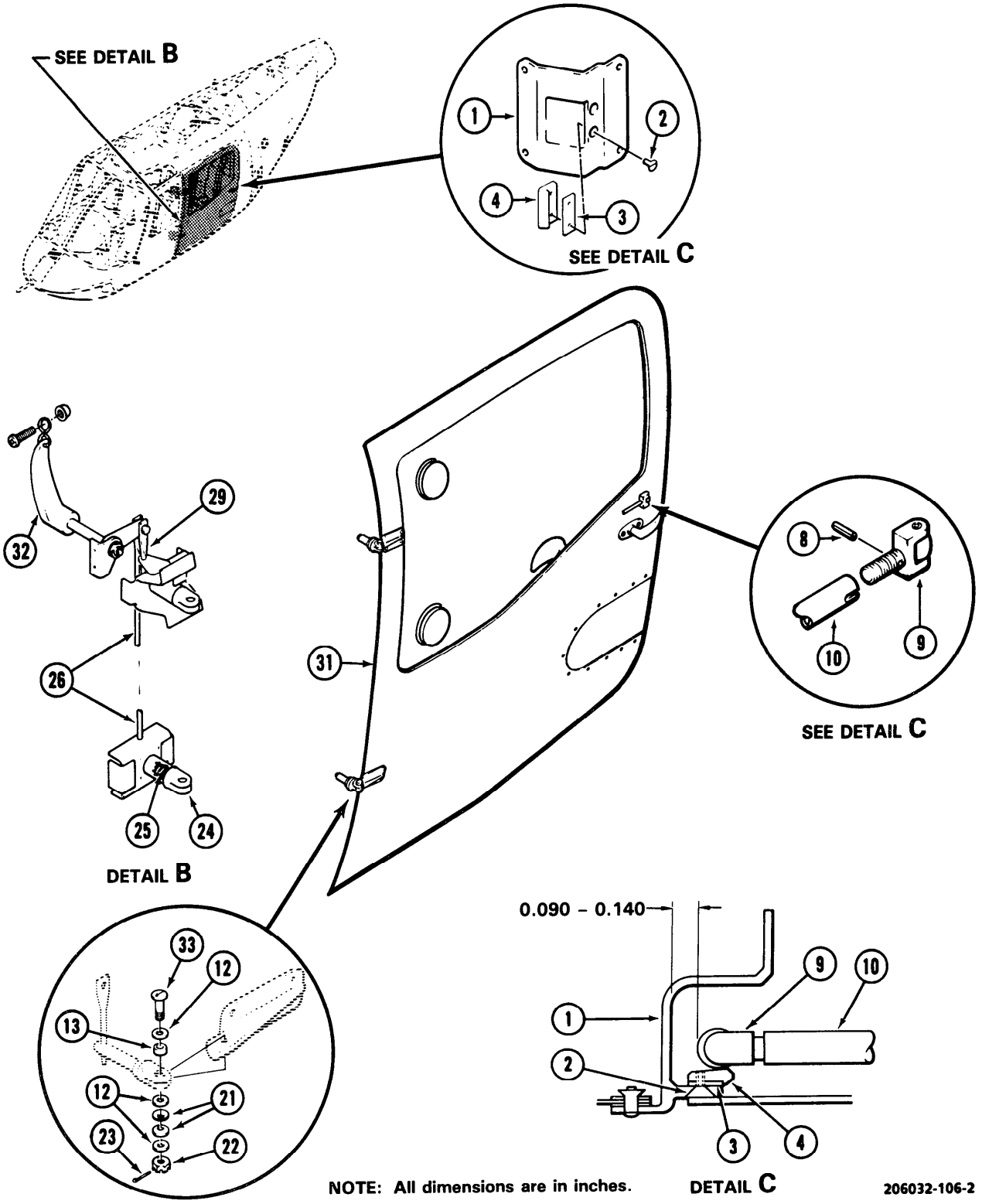

Figure 2-3. Door Installation (Sheet 2 of 2)

(1) Remove pin (1, figure 2-4) securing handle (2) to spindle (3). Remove handle.

(2) Remove screws (4) from escutcheon assembly (5). Remove escutcheon assembly and shim (6).

(3) Remove cotter pin (7), pin (8), and lift out bellcrank (9) and spindle (3).

(4) Remove pin (10) from bellcrank and pull out spindle (3).

(5) Remove two screws (11), washers (12), and remove escutcheon (13), handle (14), and spindle (15). Remove screw (16) from handle (14) and remove spindle (15) from handle. Remove retaining ring (32) and remove handle (14) from escutcheon (13).

(6) Remove seven screws (17) and washers (18) from support (19).

(7) Pull support (19) clear of door.

(8) Remove cotter pin (20) and pin (21) from rod (28).

(9) Remove washer (29) from link (22) and remove link from lever (30).

(10) Release spring (27) and remove rod (28).

(11) Remove pin (23) and remove roller assembly (24).

(12) Remove cotter pin (25), pin (26), and rod (31).

(13) Lift lever (30) free of support (19).

b. Removal of passenger door latch assembly.

NOTE

(1) Loosen screw (5, figure 2-5) and remove two screws (1). Remove escutcheon (3). Remove retaining ring (4) and separate handle (2) from escutcheon (3).

(2) Remove guard (6) from door. Knock out pin (11) and pull out spindle (12) from bellcrank (9).

(3) Remove cotter pin (8) and pin (7). Remove bellcrank (9) and receptacle (10) from inside door.

(4) Remove two screws (28), washers (27), and remove escutcheon (26), handle (29), and spindle (32). Remove screw (30) from handle (29) and remove spindle (32) from handle. Remove retaining ring (31) and remove handle (29) from escutcheon (26).

(5) Remove seven screws (16) and washers (17) from support (15).

(6) Pull support (15) clear of door.

(7) Remove cotter pin (21) and pin (22) from rod (18).

(8) Remove washer (23) from link (24) and remove link from lever (25).

(9) Release spring (14) and remove rod (18).

(10) Remove pin (19) and remove roller assembly (20).

(11) Remove cotter pin (33), pin (34), and rod (13).

(12) Lift lever (25) free of support (15).

2-10. REPAIR OR REPLACEMENT — DOOR ASSEMBLIES.

a. Replace door latch assemblies as follows:

(1) Inspect all parts for obvious damage.

NOTE

When replacing door hinge, door must be fitted to the helicopter to ensure proper hinge positioning.

(2) Replace all parts that are damaged or corroded.

b. Repair stud tearout as follows: (figure 2-6)

(1) Remove strap assembly (1), stud (2), and blind rivnut (4).

(2) Clean hole to minimum size.

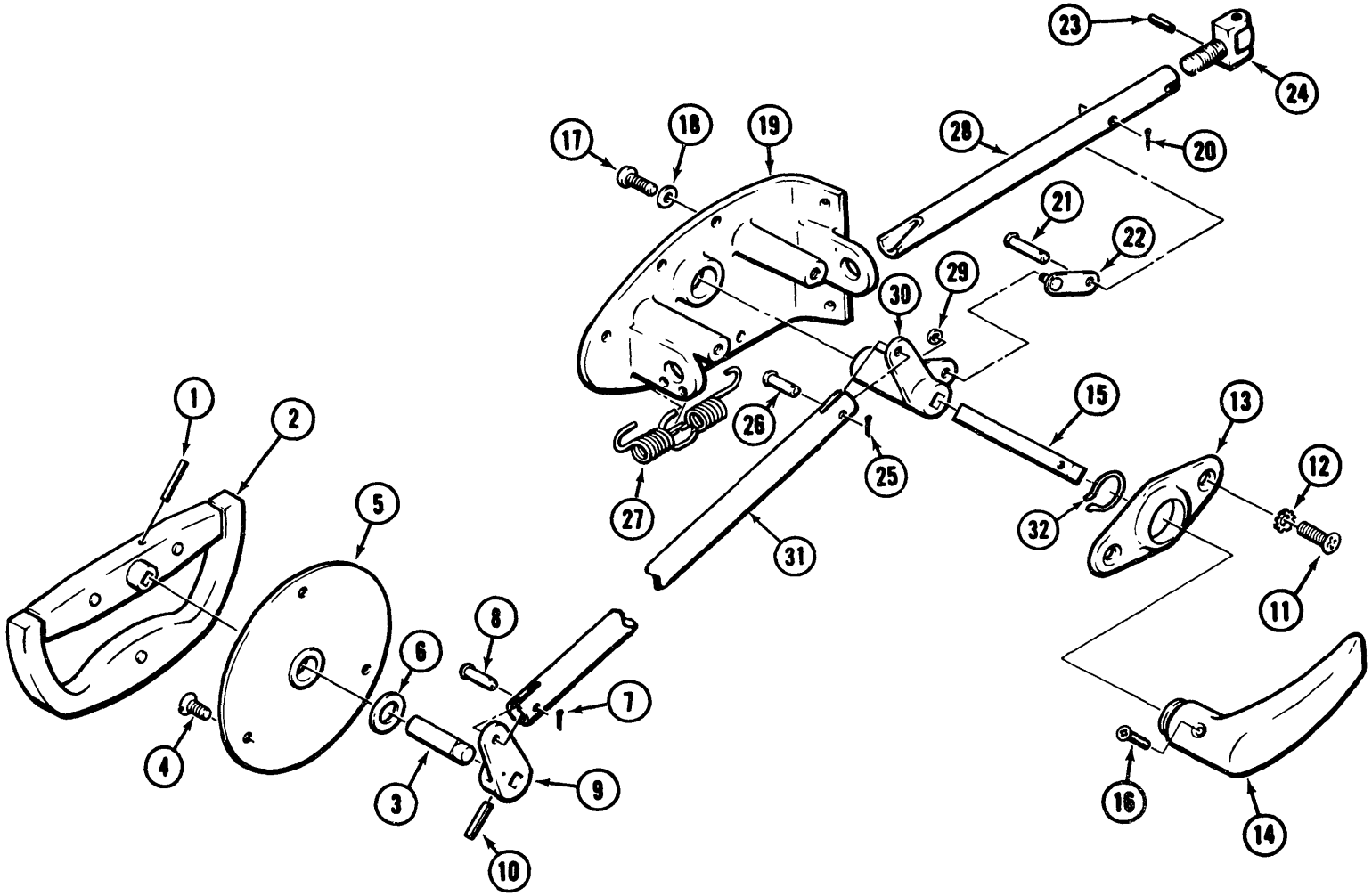

1. Pin
2. Handle
3. Spindle
4. Screw
5. Escutcheon Assembly
6. Shim
7. Cotter Pin
8. Pin
9. Bellcrank
10. Pin
11. Screw
12. Washer
13. Escutcheon
14. Handle
15. Spindle
16. Screw
17. Screw
18. Washer
19. Support
20. Cotter Pin
21. Pin
22. Link
23. Pin
24. Roller Assembly
25. Cotter Pin
26. Pin
27. Spring
28. Rod
29. Washer
30. Lever
31. Rod
32. Retaining Ring

206032-107

Figure 2-4. Latch Assembly — Crew Door

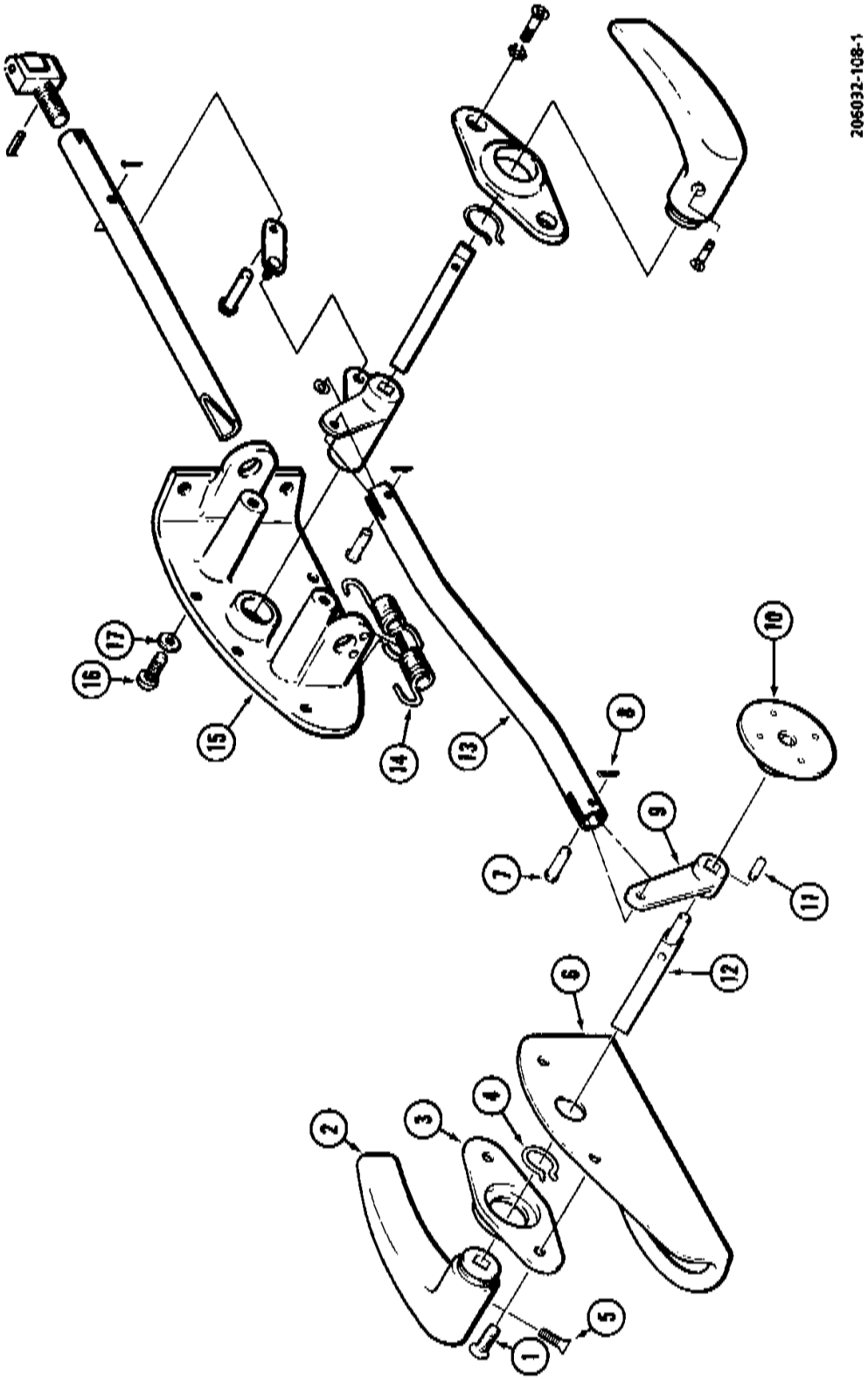

Figure 2-5. Latch Assembly — Passenger Door (Sheet 1 of 2)

1. Screw
2. Handle
3. Escutcheon
4. Retaining Ring
5. Screw
6. Guard
7. Pin
8. Cotter Pin
9. Bellcrank
10. Receptacle
11. Pin
12. Spindle
13. Rod
14. Spring
15. Support
16. Screw
17. Washer
18. Rod
19. Pin
20. Roller Assembly
21. Cotter Pin
22. Pin
23. Washer
24. Link
25. Lever
26. Escutcheon
27. Washer
28. Screw
29. Handle
30. Screw
31. Retaining Ring
32. Spindle
33. Cotter Pin
34. Pin

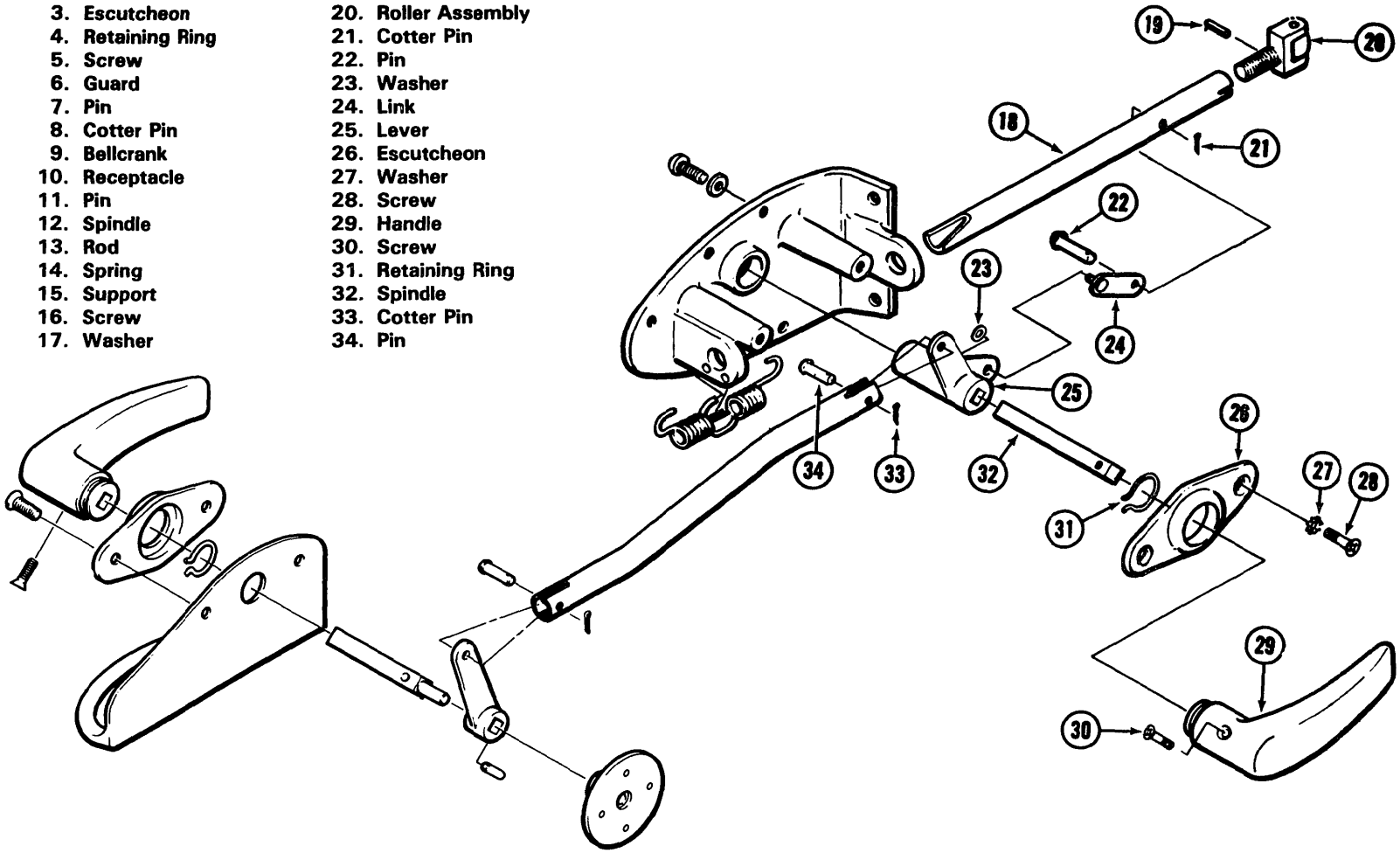

Figure 2-5. Latch Assembly — Passenger Door (Sheet 2 of 2)

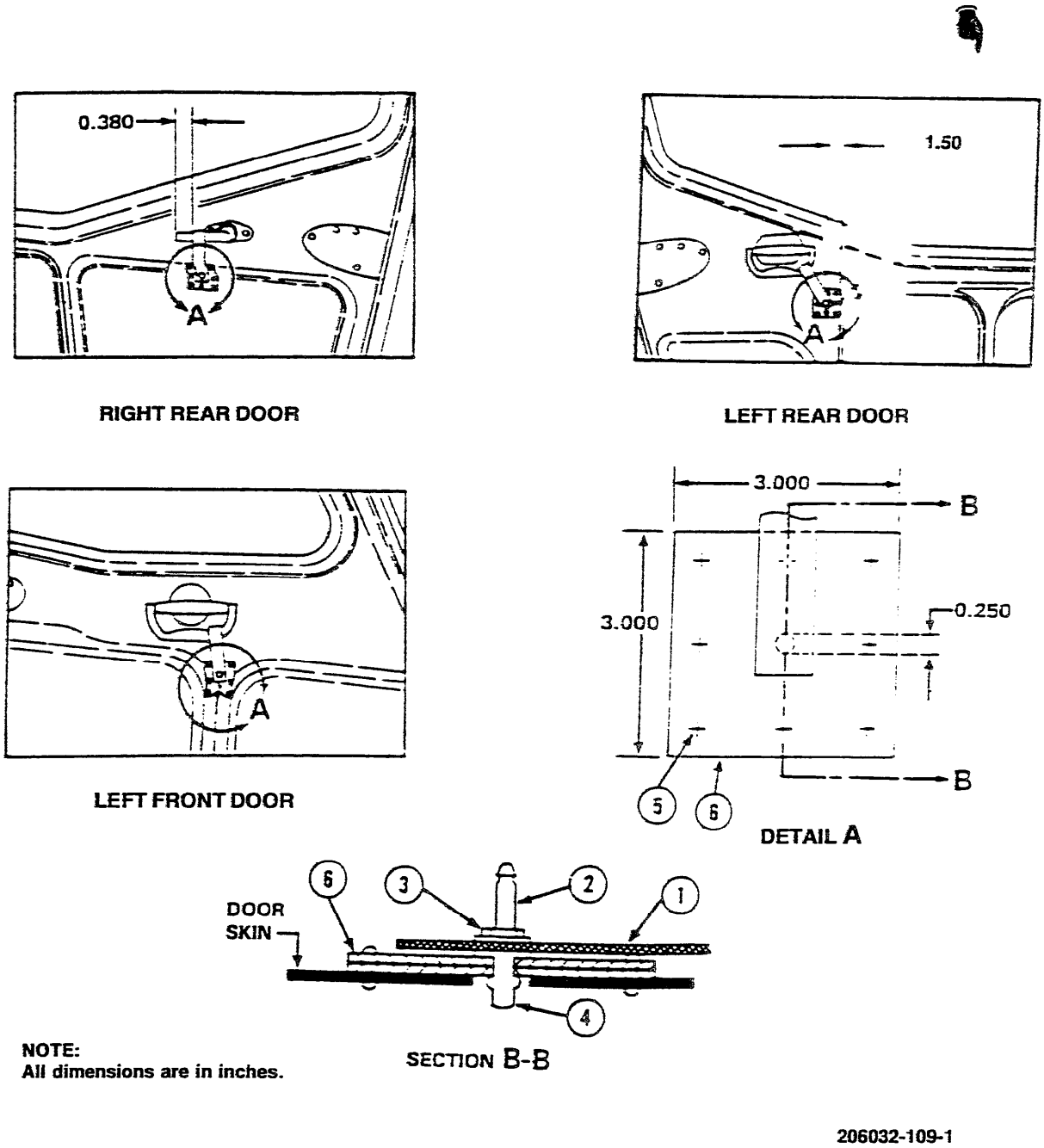

1. Strap Assembly
2. Stud, Snap Fastener
3. Washer
4. Nut, Blind Rivet
5. Rivet, Blind (6)
6. Doubler, Aluminum

Figure 2-6. Repair — Stud Tearout and Door Hinge (Sheet 1 of 3)

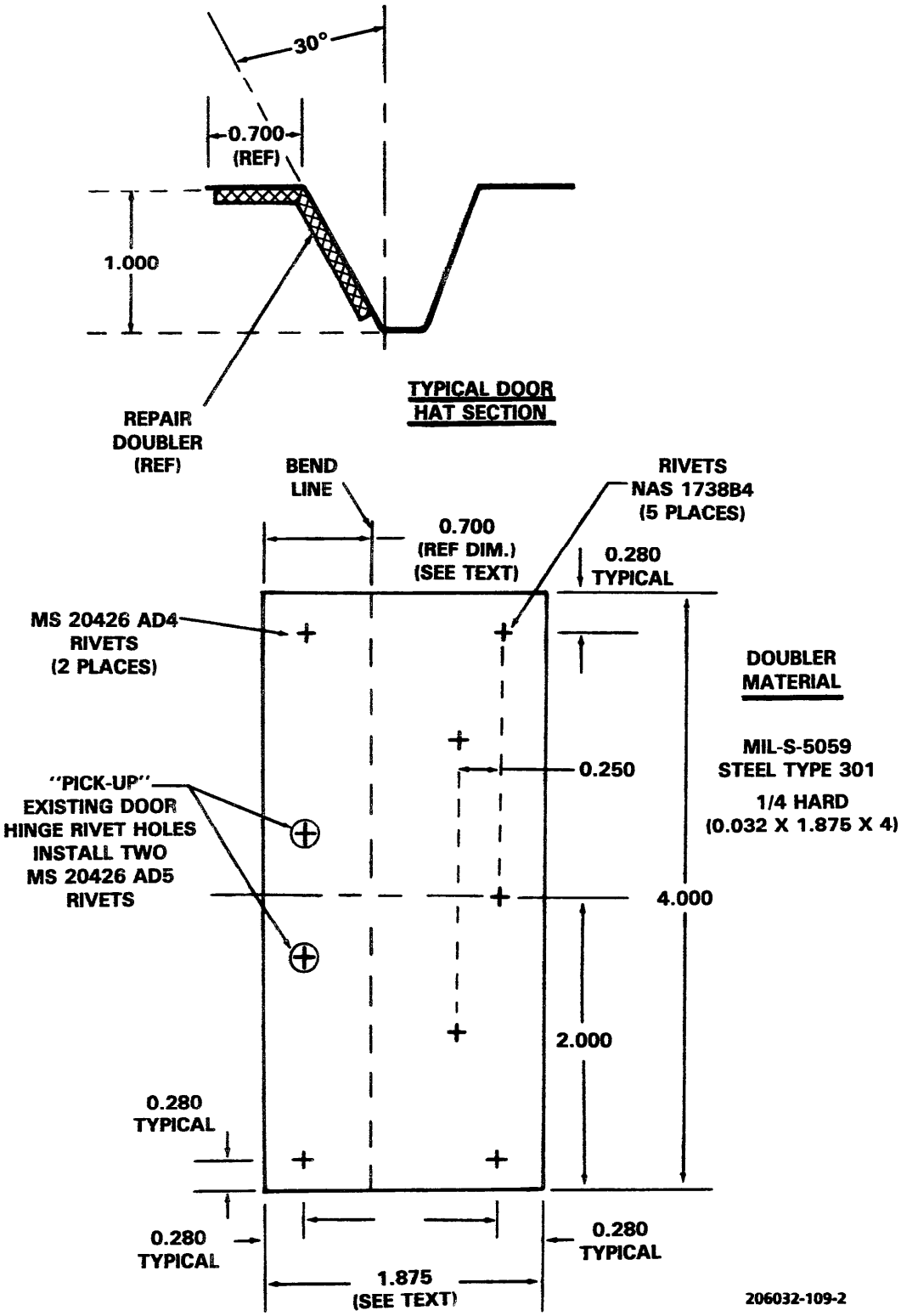

Figure 2-6. Repair — Stud Tearout and Door Hinge (Sheet 2 of 3)

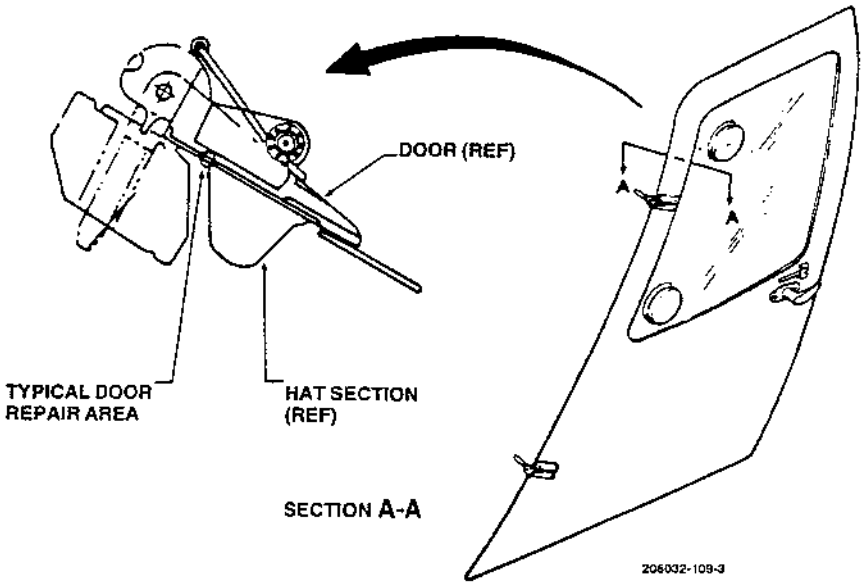

Figure 2-6. Repair — Stud Tearout and Door Hinge (Sheet 3 of 3)

(3) Add one 0.040 x 3 x 3 contour formed aluminum doubler centered along strap centerline over stud location and bond to door.

(4) Install blind rivnut (4).

(5) Install strap assembly (1) and stud (2) into rivnut.

c. For replacement of door lock angles for the outside of the right front door, fabricate (1560-OH-58-100-1 and -2) from angle material. Deburr and round corners with 1/8-inch radius (figure 2-8).

d. Repair of door hinge area:

(1) Cracks cannot exceed **0.750** inch above the upper existing rivet or **0.750** inch below existing rivet or extend into the centerline of door inner skin hat section. Stop drill all cracks with No. 40 drill.

WARNING

Acetone is extremely flammable and toxic to eyes, skin, and respiratory tract. Wear protective gloves and goggles/face shield. Avoid repeated or prolonged contact. Use only in well-ventilated areas (or use approved respirator as determined by local safety/industrial hygiene personnel). Keep away from open flames, sparks, hot surfaces or other sources of ignition.

(2) Fabricate doubler, figure 2-6, and bend to match door hat section. Position doubler on door and locate two holes for existing door hinge rivets centered about the centerline of doubler. Mark and trim off excess doubler material. Doubler should not extend over the door edge or over the crest of hat section. Locate remaining rivet holes and drill holes in doubler. Sand door area and mating surface of doubler with 180 grit sandpaper (C124) and wipe area with low-lint cleaning cloth (C45.1) saturated with acetone (C2).

(3) Bond doubler in place, using (C19) adhesive, install rivets through doubler and door, install door hinge, and prime and paint as required (reference TM 55-1500-345-23).

WARNING

Acetone is extremely flammable and toxic to eyes, skin, and respiratory tract. Wear protective gloves and goggles/face shield. Avoid repeated or prolonged contact. Use only in well-ventilated areas (or use approved respirator as determined by local safety/industrial hygiene personnel). Keep away from open flames, sparks, hot surfaces or other sources of ignition.

2-11. REPAIR — PASSENGER ENTRANCE SCUFF PLATES. Debond scuff plate and remove the two forward inboard rivets. Do not remove the two aft rivets. Cut through the aft section of the scuff plate at station 96.22 (figure 2-7). Remove the debonded and damaged scuff plate from the aircraft structure. Sand off any adhesive residue from disbonded area in spanwise direction, using abrasive (C45). Thoroughly clean the scuff plate with low-lint cleaning cloth (C45.1) saturated with acetone (C2). Wipe dry with low-lint cleaning cloth (C45.1) prior to evaporation of acetone (C2).

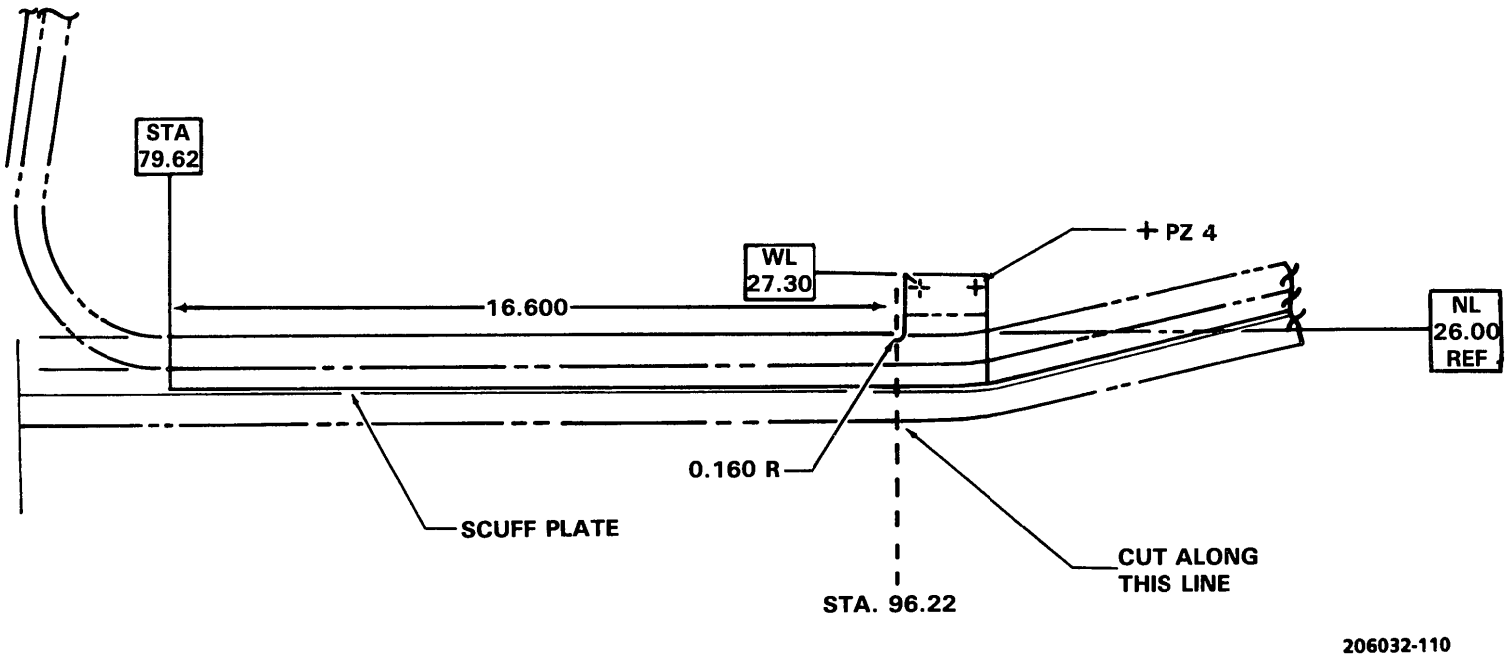

Figure 2-7. Passenger Entrance — Scuff Plate Repair

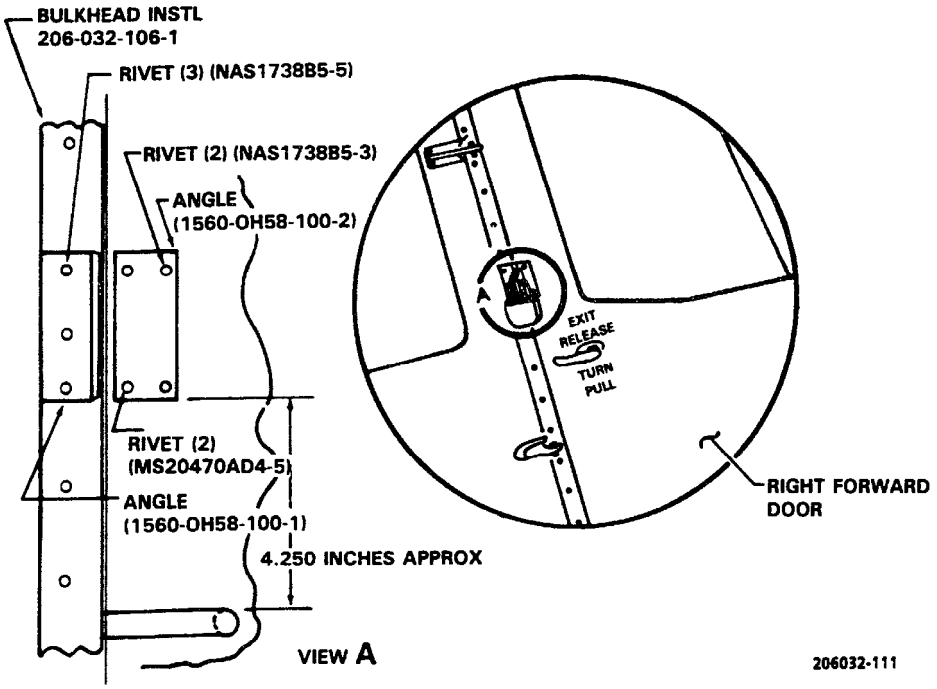

Figure 2-8. Right Front Door

Reshape the damaged scuff plate and install on aircraft bonding it with adhesive (C19) and with as many cherry rivets, (CR 2249-4) as necessary to retain scuff plate to the airframe.

2-12. INSTALLATION — DOOR SEALS.

WARNING

Acetone is extremely flammable and toxic to eyes, skin, and respiratory tract. Wear protective gloves and goggles/face shield. Avoid repeated or prolonged contact. Use only in well-ventilated areas (or use approved respirator as determined by local safety/industrial hygiene personnel). Keep away from open flames, sparks, hot surfaces or other sources of ignition.

a. Clean new seal with acetone (C2), abrade with sandpaper (C123) and clean seal again.

b. Apply adhesive (C10) using fiber brush (C31), to seal and door frame.

c. Air dry at room temperature for a minimum of one hour.

d. Press seal firmly into place against door and apply pressure for a minimum of two hours.

e. Using blind type rivets, install retainer.

2-13. ALTERNATE INSTALLATION — DOOR SEALS.

WARNING

Acetone is extremely flammable and toxic to eyes, skin, and respiratory tract. Wear protective gloves and goggles/face shield. Avoid repeated or prolonged contact. Use only in well-ventilated areas (or use approved respirator as determined by local safety/industrial hygiene personnel). Keep away from open flames, sparks, hot surfaces or other sources of ignition.

a. Clean edge of door with acetone (C2), abrade with sandpaper (C124) and clean door edge with acetone (C2) again.

b. Apply adhesive (C10) using fiber bristle brush (C31) to seal and door edge.

c. Press firmly into place on door and apply pressure for a minimum of two hours.

2-14. ASSEMBLY — DOOR ASSEMBLY.

a. Installation of crew door latch assembly.

(1) Position end of lever (30, figure 2-4) in hole in support (19).

(2) Press pin (21) on link (22) into inside arm in lever (30) and lock in place with washer (29).

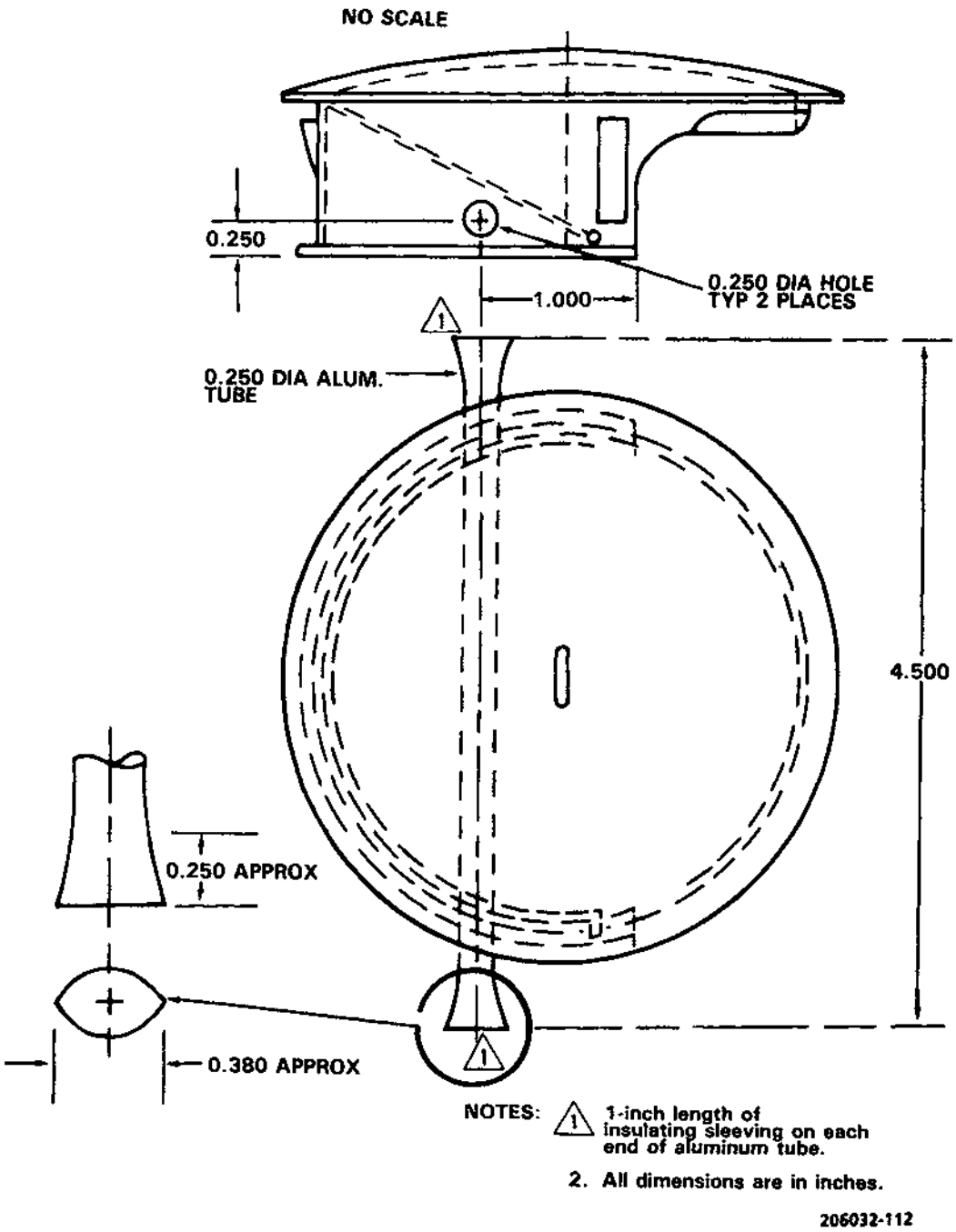

Figure 2-9. Door Vent Locks

(3) Insert rod (28) through holes in support (19) and attach springs (27). Align hole in rod with link (22) and insert pin (21). Lock in place with cotter pin (20).

(4) Position end of roller assembly (24) in rod (28) and secure with pin (23).

(5) Attach rod (31) to outside arm of lever (30) with pin (26) and cotter pin (25).

(6) Align hole in bellcrank (9) with hole forward end of rod (31), attach with pin (8) and cotter pin (7).

(7) Guide support (19) into place in door and attach with seven screws (17) and washers (18).

(8) Install handle (14) into escutcheon (13) and secure with retaining ring (32). Secure spindle (15) to handle (14) with screw (16).

NOTE

To correct fit of handle (2), peel shim (6) to move handle inboard or outboard.

(9) Guide spindle (15) into lever (30) ensuring outside arm on lever is up and install escutcheon (13) with two screws (11) and washers (12).

(10) Ensure bellcrank (9) is pointing with large square hole down and install spindle (3) and pin (10).

(11) Place shim (6) over spindle (3) and guide through escutcheon assembly (5). Install escutcheon assembly (5) with three screws (4).

(12) Install handle (2) horizontally and install pin (1) from above.

b. Installation of passenger door latch assembly.

(1) Position end of lever (25, figure 2-5) in hole in support (15).

(2) Press pin (22) on link (24) into inside arm in lever (25) and lock in place with washer (23).

(3) Insert rod (18) through holes in support (15) and attach springs (14). Align hole in rod with link (24) and insert pin (22). Lock in place with cotter pin (21).

(4) Position end of roller assembly (20) in rod (18) and secure with pin (19).

(5) Attach rod (13) to outside arm of lever (25) with pin (34) and cotter pin (33).

(6) Align hole in bellcrank (9) with hole in forward end of rod (13), attach with pin (7) and cotter pin (8).

(7) Guide support (15) into place in door and attach with seven screws (16) and washers (17).

(8) Install handle (29) into escutcheon (26) and secure with retaining ring (31). Secure spindle (32) to handle (29) with screw (30).

(9) Guide spindle (32) into lever (25), ensuring outside arm on lever is up and install escutcheon (26) with two screws (28) and washers (27).

(10) Install receptacle (10).

(11) Install bellcrank (9) to rod (13) with pin (7) and cotter pin (8).

(12) Insert spindle (12) in bellcrank (9) and install pin (11).

(13) Insert handle (2) through escutcheon (3) and install retaining ring (4).

(14) Position guard (6) and install assembled door handle over spindle (12). Align holes and install attaching screws (1). Tighten screw (5).

2-15. INSTALLATION — DOOR ASSEMBLIES.

CAUTION

Door assemblies are not directly interchangeable from one helicopter to another. Adjustment is required.

a. Position door in hinge fittings.

b. Install bolt (11 or 33, figure 2-3), washers (12), spacer (13), plates (14), belleville washers (21), and nut (22).

NOTE

Plates (14) and bolt (11) are only on doors with hold open latch. Ensure that the helicopter serial number stenciled on the inside of the door matches the serial number of the helicopter. Matching the door to the helicopter will ensure a proper fit with no further adjustment necessary. If a new door is installed, stencil the serial number of the helicopter on the inside of the new door.

c. Torque nut (22) to **15 INCH-POUNDS** and install cotter pin (23).

NOTE

Install crew doors if jettisoned (paragraph 2-32).

2-16. INSTRUMENT PANEL, SHROUD AND CONSOLE.

2-17. DESCRIPTION — INSTRUMENT PANEL, SHROUD AND CONSOLE. The instrument panel is mounted on the respective console and contains all instruments for the pilot and copilot. The instrument panel is mounted by mounting screws located around edge of panel. The instrument panel is rigidly mounted and no adjustments are required.

2-18. CLEANING — INSTRUMENT PANEL, SHROUD AND CONSOLE.

a. Remove moisture and loose dirt with a clean, soft cloth.

WARNING

Degreasing Solvent is combustible and toxic to eyes, skin, and respiratory tract. Wear protective gloves and goggles/face shield. Avoid repeated or prolonged contact. Use only in well-ventilated areas (or use approved respirator as determined by local safety/industrial hygiene personnel). Keep away from open flames or other sources of ignition.

b. Remove grease, fungus, and ground-in dirt with a clean, lint-free cloth (C45.1) dampened with degreasing solvent (C62).

2-19. INSPECTION — INSTRUMENT PANEL, SHROUD AND CONSOLE. Visually inspect panels, shrouds and consoles for surface scratches, cracks, loose or missing rivets or mounting screws, wrinkles, warpage, and evidence of corrosion. If a crack in the panel is suspected, refer to TM 1-1520-254-23, Technical Manual Aviation Unit Maintenance (AVUM) and Aviation Intermediate Maintenance (AVIM) Manual Nondestructive Inspection Procedures for OH-58 Helicopter Series.

2-20. REMOVAL — INSTRUMENT PANEL, SHROUD AND CONSOLE.

a. Ensure all electrical power if OFF.

b. Disconnect all electrical receptacles and hoses from instruments.

c. Cover all receptacles and hoses to prevent entrance of foreign particles.

d. Cover openings in instruments.

e. Remove mounting hardware from instrument panel, shroud or console and lift the components from the helicopter.

2-21. REPAIR — INSTRUMENT PANEL, SHROUD AND CONSOLE.

a. Repair cracks. Refer to TM 1-1500-204-23.

b. Replace loose and missing rivets and mounting screws.

c. Remove corrosion if present. Refer to TM 43-0105.

d. Touch up paint, if damaged or deteriorated, using primers (C118) A , (C116) C , and lacquers (C91) A and (C89 or C90) C in accordance with TM 55-1500-345-23.

2-22. INSTALLATION — INSTRUMENT PANEL, SHROUD AND CONSOLE.

a. Position console in place and install mounting hardware.

b. Position instrument panel on console and install mounting hardware.

c. Connect electrical receptacles to instruments. Refer to Chapter 8.

d. Position shrouds as applicable and install mounting hardware.

2-23. BEAM UPPER CABIN ROOF.

2-24. DESCRIPTION — BEAM UPPER CABIN ROOF. The beam is installed under the cabin roof between the bulkheads at station 73.0 and 30.0. The beam is

constructed of aluminum alloy forgings and extrusions and provides support for the pylon mount.

2-25. INSPECTION — BEAM UPPER CABIN ROOF. Inspect upper beam for loose, sheared or missing rivets, cracks, and evidence of corrosion. If crack in upper beam is suspected, refer to TM 1-1520-254-23, Technical Manual Aviation Unit Maintenance (AVUM) and Aviation Intermediate Maintenance (AVIM) Manual Nondestructive Inspection Procedures for OH-58 Helicopter Series.

2-26. REMOVAL — BEAM UPPER CABIN ROOF. Removal of upper beam must be accomplished at depot maintenance.

2-27. REPAIR — BEAM UPPER CABIN ROOF.

a. Repair is limited to replacement of loose, sheared or missing rivets and removal of corrosion. Refer to TM 1-1500-204-23 and TM 43-0105.

b. Repair of cracks in upper beam must be accomplished at depot maintenance.

2-28. JETTISON MECHANISM.

2-29. DESCRIPTION — JETTISON MECHANISM. The jettison mechanism (details A and B, figure 2-3) consists of a handle and rod assembly to facilitate emergency exiting of helicopter.

2-30. INSPECTION — JETTISON MECHANISM.

a. Inspect handles for cracks or bends. If crack in handle is suspected, refer to TM 1-1520-254-23, Technical Manual Aviation Unit Maintenance (AVUM) and Aviation Intermediate Maintenance (AVIM) Manual Nondestructive Inspection Procedures for OH-58 Helicopter Series.

b. Inspect rods for bends or corrosion.

c. Inspect crew door rods for a minimum of **0.500** inch extension through door hinges.

d. Ensure that handle is properly safetied with copper lockwire (C98). Refer to figure 2-3, detail D.

2-31. REMOVAL — JETTISON MECHANISM.

CAUTION

Removal of jettison mechanism rods will release spring loaded door hinges.

a. Remove cover plates and screws over rear door units.

b. Remove handles and rods.

2-32. REPAIR OR REPLACEMENT — JETTISON MECHANISM. Replace defective handles and/or rods with serviceable items.

2-33. INSTALLATION — JETTISON MECHANISM (FIGURE 2-3). Install jettison mechanism as follows:

a. Install rods ensuring they engage door hinge. Ensure crew door rod extends a minimum 0.500 inch through door hinge.

NOTE

To keep from bending rods, remove inspection plates and assist rod tip through rod guides and door hinge.

In the event stop screw (5) contacts crew upper jettison rod preventing 0.500 inch minimum engagement of rod at tower hinge half, file head of stop screw as required to obtain minimum engagement.

b. Install handles with bolts, nuts, and washers.

c. Attach rods to handles and lockwire (C98) handle to bulkhead.

2-34. COWLING AND FAIRINGS — ENGINE AND TRANSMISSION.

2-35. DESCRIPTION — COWLING AND FAIRINGS.

a. Cowling and fairings are used to protect and provide easy maintenance access to engine compartment, intake and exhaust tailpipe areas, and top of main transmission.

b. Repair patches are to be manufactured of aluminum alloy 2024, T3, .032 inch thick, 4 inches by 4 inches for installation on the cowl side panels at the snap open latches. The cut outs or the latches are to match drawing for 206-061-805-9. The latch cut outs are to be in the center of the patch one inch from the bottom edge of the patch. The patch is to be installed with rivets.

2-36. TRANSMISSION FAIRING ASSEMBLY.

2-37. DESCRIPTION — TRANSMISSION FAIRING ASSEMBLY. The transmission fairing is in two sections consisting of forward and induction fairings. Induction section provides for air intake to the particle separator. On helicopters, serial number 70-15244 and subsequent, and helicopters incorporating MWO 55-1520-228-30/9 acrylic plastic inlet plenum inspection windows (10, figure 2-10) are installed in the induction fairing (2). These windows make unnecessary the removal of induction fairing and particle separator for inlet plenum inspection. Helicopters with MWO 55-1520-228-30/-10

accomplished will have reverse inlet flow fairings (2, figure 2-11) over induction fairings. These fairings reduce the possibility of engine flameout due to snow ingestion. The OH-58C forward transmission fairing (1) has flame spray metal coating on part of inner and outer skin. Metal coating provides conductive surface for APX-100 antenna.

2-38. INSPECTION — TRANSMISSION FAIRING ASSEMBLY.

a. Inspect fairing for cracks, tears, and damage. If crack in fairing is suspected, refer to TM 1-1520-254-23, Technical Manual Aviation Unit Maintenance (AVUM) and Aviation Intermediate Maintenance (AVIM) Manual Nondestructive Inspection Procedures for OH-58 Helicopter Series.

b. Inspect hinges and fittings for wear, damage, and serviceability.

c. Inspect windows for abrasions, scratches, cracks, holes or other damage that impedes visual inspection of the inlet plenum or that permits outside air or material to enter. Refer to TM 1-1500-204-23 for repair.

d. Inspect rubber seal on top and sides of forward firewall assembly for tears and bond failure.

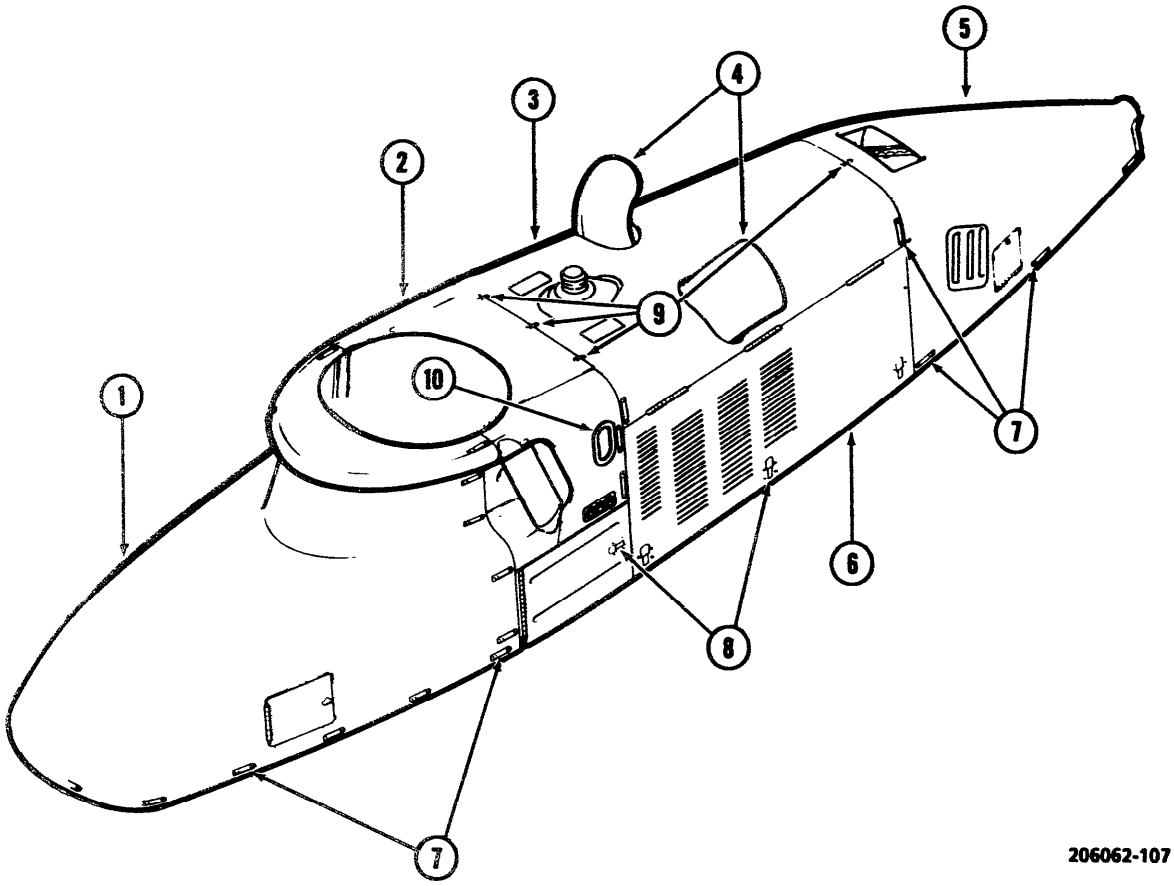

1. Forward Fairing
2. Induction Fairing
3. Engine Cowl
4. Exhaust Stacks
5. Aft Fairing
6. Cowl Side Panel
7. Fastener
8. Snap-Open Latch
9. Screw
10. Inlet Plenum Inspection Window

Figure 2-10. Engine and Transmission Cowling A

1. Forward Transmission Fairing
2. Reverse Inlet Flow Fairing
3. Induction Fairing
4. Screw
5. Screen
6. Exhaust Stack
7. Engine Cowl
8. Screens
9. Screw
10. Aft Fairing
11. Fastener
12. Cowl Side Panel
13. Snap-Open Latch
14. Access Door
15. Screw
16. Fastener
17. Infra-Red Shields
18. Access Door

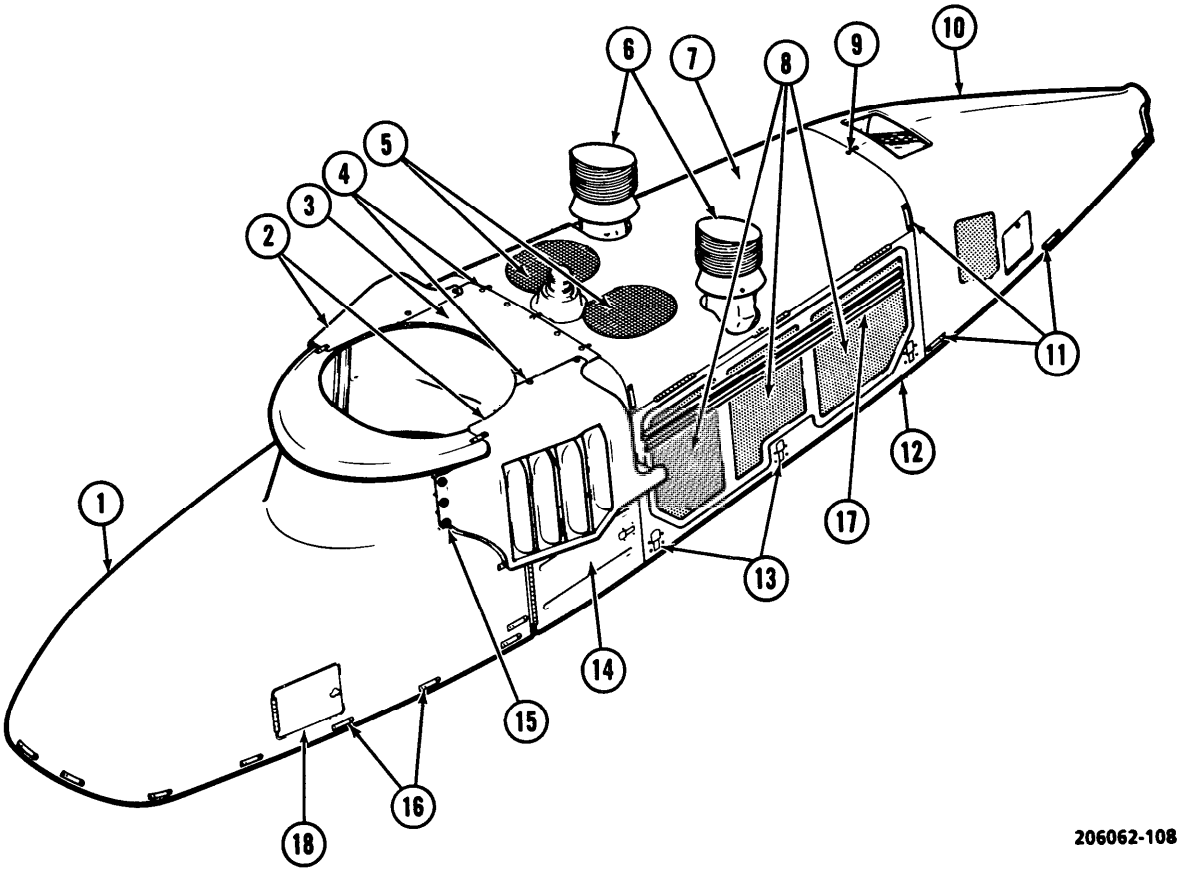

Figure 2-11. Engine and Transmission Cowling C

NOTE

To prevent access door (6 and 9, Figure 2-1) skin fractures caused by the snap open latch contacting edge of cutout when snapping open, latch cutout length may be extended by filing 0.188 inch from aft edge of cutout.

2-39. REMOVAL — TRANSMISSION FAIRING ASSEMBLY A.

CAUTION

Protect compressor inlet port opening and governor control rod on left side when the induction fairing is removed.

NOTE

Reverse inlet flow fairing, if installed, must be removed before removing either forward transmission fairing (1, figure 2-10) or induction fairing (2). Forward fairing (1) must be removed before removing induction fairing.

a. Loosen fasteners (7) securing the forward section of fairing (1). Lift fairing from helicopter.

b. Loosen fasteners securing induction fairing (2).

NOTE

Armor plate may be removed to aid in removal of fairing.

c. Unlatch access doors (6 and 9, figure 2-1) on each side of induction fairing and remove screws attaching induction fairing to roof deck.

d. Remove bleed air lines from particle separator.

e. Unlatch engine cowl panels (6, figure 2-10) to gain access to internal screws. Remove screws (9) attaching induction fairing to particle separator and forward firewall.

2-40. REMOVAL — TRANSMISSION FAIRING ASSEMBLY C.

NOTE

Reverse inlet flow fairing (2, figure 2-11), if installed, must be removed before removing either forward transmission fairing (1) or induction fairing (3). Forward transmission fairing must be removed before induction fairing is removed.

a. Unlatch access doors (6 and 9, figure 2-2) to remove bolt attaching lower edge of reverse inlet flow fairing (2, figure 2-11) to induction fairing (3).

b. Loosen fastener, remove attaching bolts and screws. Remove reverse inlet flow fairing (2).

c. Open forward fairing inspection doors (5, figure 2-2). Disconnect glideslope and APX-100 antenna cables inside doors. Refer to TM 11-1520-228-20-1.

d. Loosen fasteners (16, figure 2-11) and remove forward transmission fairing (1).

NOTE

Protect compressor inlet port opening and governor control rod on left side when induction fairing (3) is removed.

e. Loosen fasteners securing induction fairing (3).

NOTE

Armor plate may be removed to aid in removal of induction fairing.

f. Unlatch access doors (14) on each side of induction fairing and remove screws attaching fairing to top of deck.

g. Remove bleed air lines from particle separator.

h. Unlatch engine cowl side panels (7, figure 2-2) to gain access to screws inside. Remove screws attaching the particle separator to the forward firewall which is part of induction fairing on forward firewall.

i. Remove induction fairing (3, figure 2-11).

2-41. REPAIR — TRANSMISSION FAIRING ASSEMBLY. A Refer to TM 1-1500-204-23 for repair.

2-42. REPAIR — TRANSMISSION FAIRING ASSEMBLY C (FIGURE 2-12).

a. Repair areas that are not flame-spray metalized using standard repair methods. Refer to TM 1-1500-204-23.

NOTE

Remove minimum amount of flame-spray metalized surface necessary to accomplish repairs.

b. Repair edges, fastener attachment areas, and door hinge areas of flame-spray metalized surfaces as follows:

(1) Use 80 grit sandpaper (C123) to remove metalized coating, if required in repair area.

(2) Use standard repair procedures.

c. Repair other flame-spray metalized areas, if authorized by engineering.

2-43. INSTALLATION — TRANSMISSION FAIRING ASSEMBLY.

CAUTION

Exercise care to prevent damage to the rubber seal on forward firewall during installation of induction fairing assembly.

a. Position induction fairing assembly on forward firewall and align mounting holes.

b. Install screws securing fairing to roof deck.

c. Install bleed air lines on particle separator.

d. Install screws securing particle separator to forward firewall.

e. Tighten fasteners on fairing.

f. Position forward section in place and tighten fasteners to secure fairing. If reverse inlet flow fairing is to be installed at this time, do not tighten fastener at top edge of forward transmission fairing, adjacent to main rotor mast opening.

g. Connect glideslope and APX-100 antenna cables inside inspection door (5, figure 2-2) on forward fairing. Refer to TM 11-1520-228-20-1. C .

h. Install reverse inlet flow fairing (2, figure 2-11), if required. Place fairing (2) over forward transmission fairing (1). Tighten fastener and install three bolts and five screws. Install bolt on bottom edge through open access door (14) of induction fairing (3).

2-44. ENGINE COWLING.

2-45. DESCRIPTION — ENGINE COWLING. The engine cowling (3, figure 2-10 A) (7, figure 2-11 C) is constructed of aluminum alloy and is removable for engine change. Cowling access panels are provided with snap-open fasteners which permit inspection without removing the cover unit.

2-46. INSPECTION — ENGINE COWLING. Inspect engine cowling for cracks, dents, and damage. If crack in engine cowling is suspected, refer to TM 1-1520-254-23, Technical Manual Aviation Unit Maintenance (AVUM) and Aviation Intermediate Maintenance (AVIM) Manual Nondestructive Inspection Procedures for OH-58 Helicopter Series.

2-47. REMOVAL — ENGINE COWLING.

a. Remove four screws and unlatch four fasteners attaching upper cowling (3, figure 2-10 A) (7, figure 2-11 C) to forward and aft firewalls.

b. Open cowling side panels (6, figure 2-10 A) (12, figure 2-11 C) and disconnect anticollision light electrical lead.

c. Disconnect engine oil vent hose from right side engine exhaust stack.

d. Remove nuts from exhaust stack clamps and exhaust stacks (4, figure 2-10 A) (6, figure 2-11 C) from engine exhaust collectors.

e. Remove engine cowling (3, figure 2-10 A) (7, figure 2-11 **C**) from helicopter and exhaust stacks (4, figure 2-10 A) (6, figure 2-11 C) from cowling openings at the same time.

2-48. REPAIR — ENGINE COWLING.

a. Sheet metal repair will be accomplished as outlined in TM 1-1500-204-23.

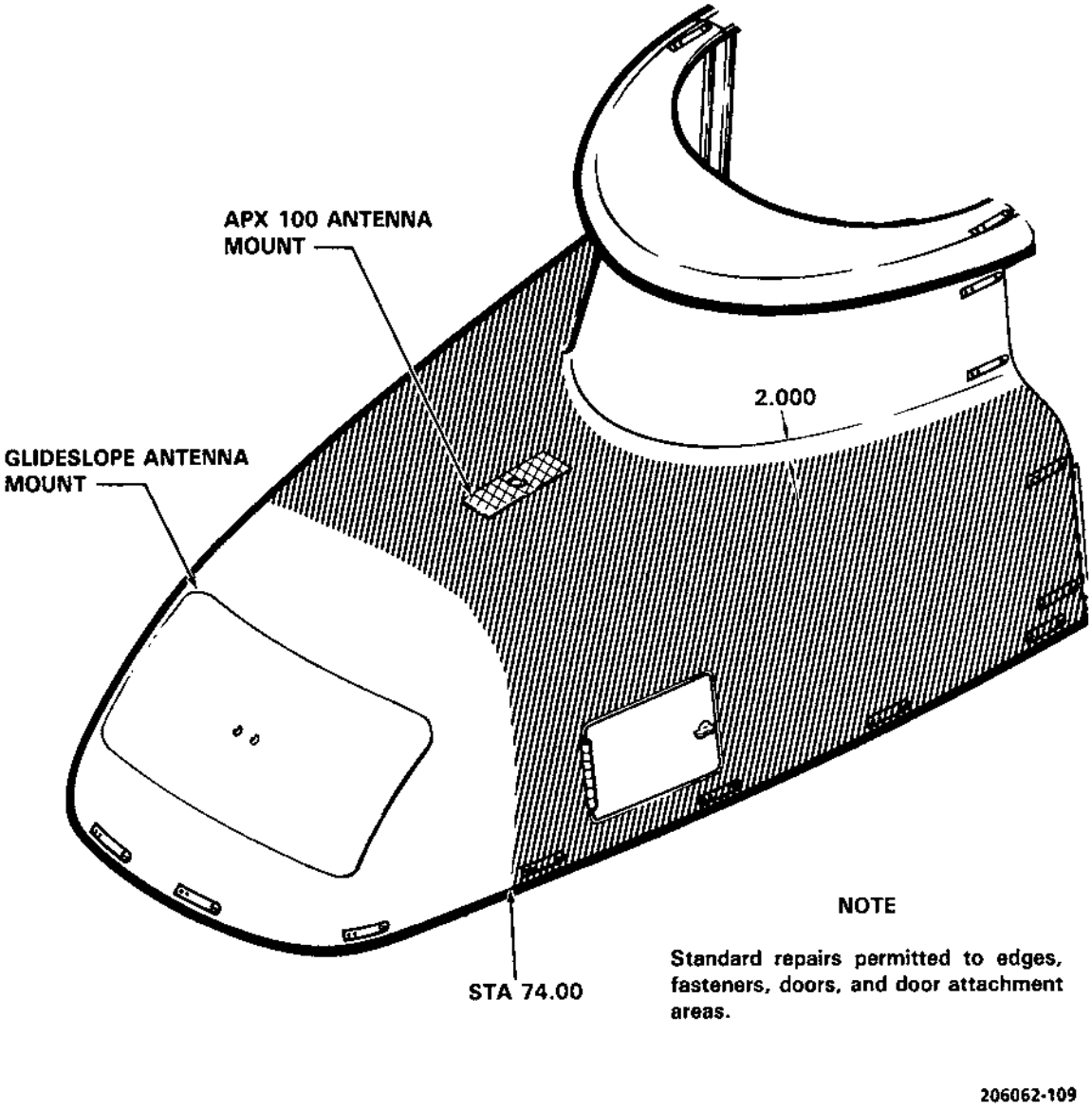

Standard repair. Refer to TM 1-1500-204-23.

Inner surface flame spray metalized. Repairs which affect inner surface require engineering approval.

Both surfaces flame spray metalized. Repairs require engineering approval.

Figure 2-12. Forward Fairing Repair C

b. Repair engine cowling side panel screens (8, figure 2-11) with aluminum alloy sheet (23, table 2-1). Make hole pattern to match existing screen. C

c. Upper engine cowling assemblies P/N 206-061-804-63 with deteriorated royalite on screen assemblies, P/N 206-062-817-1, will be repaired as follows:

(1) Remove screen assemblies from cowling and remove deteriorated layer of royalite from screen.

(2) Fabricate doubler the same size as screen O.D. from 300 series, 1/2 hard stainless steel,.025 x 5/8 inch.

(3) Reinstall screen and doubler to cowling, picking up original holes, with 3/32" MS20426AD rivets. Install rivets wet with zinc chromate primer.

2-49. INSTALLATION — ENGINE COWLING.

a. Position engine exhaust stacks (4, figure 2-10 A) (6, figure 2-11 C) in engine cowling (3, figure 2-10 A) (7, figure 2-11 C) openings and place both on helicopter.

b. Position cowling (3, figure 2-10 A) (7, figure 2-11 C) on forward and aft firewalls and install four screws and latch four fasteners attaching upper cowling (3, figure 2-10 A) (7, figure 2-11 C) to firewalls.

c. Install engine exhaust stacks (4, figure 2-10 A) (6, figure 2-11 C) on engine exhaust collector. Refer to paragraph 4-61.

d. Connect anticollision light electrical lead.

e. Close and fasten engine cowl side panels (6, figure 2-10 A) (12, figure 2-11 C).

2-50. REWORK — ENGINE COWLING (AVIM). OH-58A/C aircraft with the IR suppressor stacks may require the following rework:

WARNING

Remove Cowl prior to trimming of exhaust cutouts to preclude foreign materials from falling into the engine exhaust collectors. Keep exhaust collector openings covered to the maximum extent possible.

a. Remove engine cowling (paragraph 2-47) and exhaust cones (paragraph 4-58). Retain the attaching hardware for reinstallation.

b. Temporarily reinstall and fasten down the engine cowling, insert from the top and position replacement suppressor stacks on engine exhaust collector. Note any areas of interference between the stack sides and exhaust port cutouts in the engine upper cowl and compress stack insulation. Locally remove material from the cowl exhaust port cutouts as required to provide a minimum of **0.032** inch clearance in all areas.

c. If cowl exhaust cutouts require material removal to provide required clearance, determine if cutout support doubler width is decreased to less than **0.250** inch width and/or if doubler attach rivets have less than **0.140** inch edge distance. Less than **0.140** inch rivet edge distance necessitates additional trimming to remove the rivet hole. Doubler width of less than **0.250** inch in any area necessitates removal of the doubler and fabrication of a new doubler **0.500** inch wide to reinforce the new shape cutout. The new doubler to be fabricated from **0.032** inch aluminum sheet, QQ-A-250/5, and attached with MS20470AD3-4 rivets. Apply primer (C116), to reworked areas as required.

d. Reinstall engine cowling (paragraph 2-49) and exhaust stacks (paragraph 4-61).

2-51. DRIP PAN AND FRAME ASSEMBLY.

2-52. DESCRIPTION — DRIP PAN AND FRAME ASSEMBLY. The frame and drip pan are installed aft of the engine pan and provide mounting surfaces for the oil cooler and two drive shaft hangers. The frame is constructed of aluminum honeycomb core and aluminum facings with two ply fiberglass edging. Refer to paragraph 2-223 for drip pan drain installation.

2-53. INSPECTION — DRIP PAN AND FRAME ASSEMBLY.

a. Inspect for loose, sheared, or missing rivets, evidence of corrosion and security.

b. Inspect honeycomb frame assembly for delamination, punctures, dents, cracks, buckles, and other damage. If damage is suspected, refer to TM 1-1520-254-23, Technical Manual Aviation Unit Maintenance (AVUM) and Aviation Intermediate Maintenance (AVIM) Manual Nondestructive Inspection Procedures for OH-58 Helicopter Series.

2-54. REPAIR — DRIP PAN AND FRAME ASSEMBLY. Refer to paragraph 2-172 and TM 1-1500-204-23 for repairs.

2-55. PASSIVE DEFENSE. A

2-56. DESCRIPTION — PASSIVE DEFENSE. A Two pieces of armor plate are located in the forward section of the engine compartment for protection of the engine compressor section. These are mounted on the forward firewalls, one on each side of the engine compressor. Refer to paragraph 2-124 for additional armor panel information.

2-57. INSPECTION — PASSIVE DEFENSE. A

a. Inspect armor plates for security of mounting.

b. Inspect for damage resulting from enemy fire. Replace Armor plate.

2-58. REMOVAL — PASSIVE DEFENSE. A

a. Open engine cowling (7, figure 2-1) on side requiring armor plate.

b. At forward firewall remove two nuts, washers, and screws attaching plate to firewall stiffener.

c. Remove two nuts, washers, and screws attaching two brace assemblies to firewall support. Remove armor plate assembly.

2-59. DISASSEMBLY — PASSIVE DEFENSE. A Armor plate is removed from angle and brace assemblies by removing two nuts and washers at each brace assembly.

2-60. REPAIR OR REPLACEMENT — PASSIVE DEFENSE. A Repair is limited to replacement with like serviceable item.

2-61. REASSEMBLY — PASSIVE DEFENSE. A Position brace assembly on serviceable armor plate and secure with two nuts and washers on each brace assembly.

2-62. INSTALLATION — PASSIVE DEFENSE. A

a. Position armor plate assembly in firewall mounting supports.

b. Install two screws, washers, and nuts securing brace assemblies to firewall support.

c. Where armor plate assembly seats in firewall support install two screws, washers, and nuts. Close engine cowling.

2-63. AFT FAIRING.

2-64. DESCRIPTION — AFT FAIRING. The aft fairing (5, figure 2-10 A) 10, figure 2-11 C) encloses the oil cooler, oil cooler blower tan, and the oil tank.

2-65. INSPECTION — AFT FAIRING.

a. Inspect for cracks dents and damage. Refer to TM 1-1520-254-23, Technical Manual Aviation Unit Maintenance (AVUM) and Aviation Intermediate Maintenance (AVIM) Manual Nondestructive Inspection Procedures for OH-58 Helicopter Series.

b. Inspect for interference with the tail rotor driveshaft coupling disc. If interference with coupling disc is present, refer to AVIM maintenance for repair.

2-66. REMOVAL — AFT FAIRING. A Unlock fasteners (7, figure 2-10) attaching aft fairing to firewall and remove aft fairing (5) from helicopter.

2-67. REMOVAL — AFT FAIRING. C

a. Remove aft screw (10, figure 2-11) and unlock fasteners (11).

b. Remove aft fairing (10).

2-68. REPAIR — FAIRING. To prevent damage to aft fairing by tubing, cut out honeycomb as shown in figure 2-12.1. Fill edges of cut out with two part EA934 as shown. Reference TM 1-1500-204-23 for additional repair.

2-69. INSTALLATION — AFT FAIRING. A

a. Position aft fairing assembly to aft firewall and align mounting holes.

b. Install and lock three turnlock fasteners securing aft fairing to aft firewall and tighten.

2-70. INSTALLATION — AFT FAIRING. C

a. Position aft fairing (10, figure 2-11) to aft firewall. Align mounting holes.

b. Close fasteners (11) and install screws (9).

2-71. ACCESS DOORS AND PANELS.

2-72. DESCRIPTION — ACCESS DOORS AND PANELS. Access doors and panels consist of the avionics compartment door, external power receptacle door and inspection plates for access to and maintenance of components.

NOTE

Panels secured by screws or bolts are considered structural and will be in place for jacking, hoisting, towing, and flight. Panels that are cracked, bent, or having enlarged fastener holes will be replaced. Structural panels will be installed with all fasteners in place.

2-73. AVIONICS COMPARTMENT DOOR.

2-74. DESCRIPTION — AVIONICS COMPARTMENT DOOR. The avionics door (4, figure 2-1 A) (4, figure

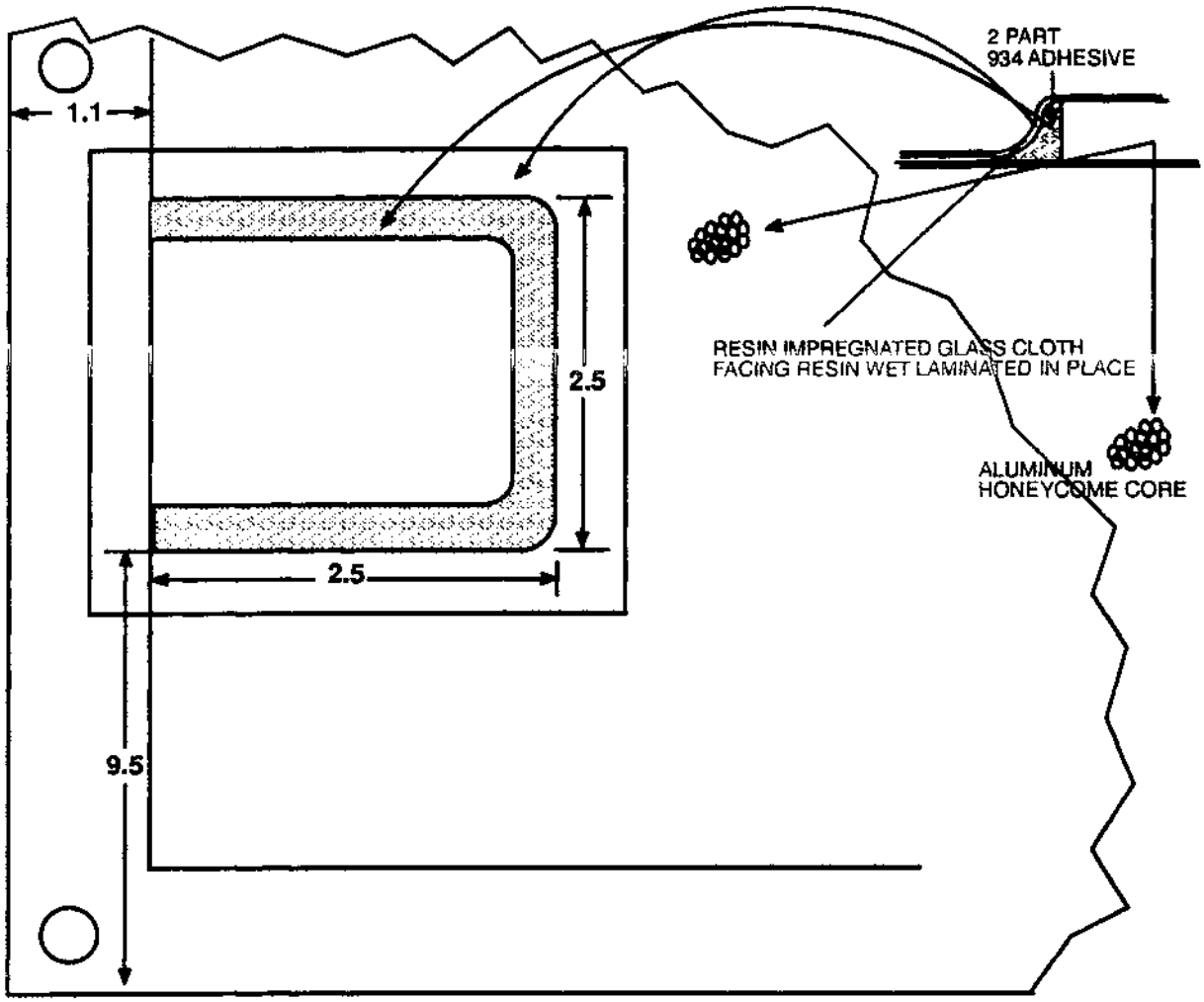

VIEW LOOKING INBOARD R/H SIDE FWD FAIRING ASSEMBLY P/N 206-532-401-111

Figure 2-12.1. AFT Fairing Repair

2-2 C) is on left side aft of the cabin doors and provides ready access to the battery and avionics equipment. This door is secured by two push type latches. Push inboard on two latches to release door.

2-75. INSPECTION — AVIONICS COMPARTMENT DOOR.

a. Inspect door for damage, cracks, and wear. If crack in door is suspected, refer to TM 1-1520-254-23, Technical Manual Aviation Unit Maintenance (AVUM) and Aviation Intermediate Maintenance (AVIM) Manual Nondestructive Inspection Procedures for OH-58 Helicopter Series.

b. Inspect hinges and latches for wear, damage, and serviceability.

c. Inspect quick release pins for wear, damage, and serviceability.

2-76. REMOVAL — AVIONICS COMPARTMENT DOOR. A C Open door and remove screws, washers, and nuts from hinge points; remove door.

Deleted

2-77. REPAIR — AVIONICS COMPARTMENT DOOR. Repair will be accomplished according to procedures outlined in TM 1-1500-204-23 (Series).

2-78. INSTALLATION — AVIONICS COMPARTMENT DOOR. A C Position door in hinges and install screws, washers, nuts.

Deleted

2-79. EXTERNAL POWER RECEPTACLE ACCESS DOOR. Inspect external power receptacle access door (14, Figure 2-1 A) (14, Figure 2-2 C) for locking, security, and damage.

NOTE

Panels secured by screws or bolts are considered structural and will be in place for jacking, hoisting, towing, and flight. Panels that are bent, cracked, or have enlarged fastener holes will be replaced. Structural panels will be Installed with all fasteners in place.

2-80. INSPECTION PANELS. Inspection panels (refer to Figure 2-1 A and 2-2 C), secured with screws or fasteners, are provided for inspection and maintenance of the helicopter.

2-81. REMOVAL — INSPECTION PANELS. Remove screws attaching panels to structures.

2-82. INSTALLATION — INSPECTION PANELS. Position inspection panel in opening and install screws to attach panel to structure.
To prevent inadvertent future installation of screw, nut plate should be removed and a **1/2** inch square of **0.023** inch thick aluminum bonded over exterior of holes with adhesive (C19). On OH-58C aircraft the lower left screw hole has been eliminated from the heater duct on the center post to prevent inadvertent installation of screw in this location.

CAUTION

Use of excessive length screws may cause damage to internal components or parts of the helicopter structure. Ensure that only specified size screws are used.

To avoid machine screw damage to tail rotor connecting link, do not reinstall screw which secures the center post cover assembly (and cover) at water line 37.55 (third screw up from bottom left side of center post).

2-83. CREW AND PASSENGER SEATS.

2-84. PILOT AND COPILOT SEATS.

2-85. DESCRIPTION — PILOT AND COPILOT SEATS. The pilot and copilot seats are constructed of tubing and raschel knit material. Each seat is equipped with back cushions, safety belts, shoulder harness, and inertial reel and strap.

2-86. INSPECTION — PILOT AND COPILOT SEATS.

a. Inspect seat netting.

(1) Deterioration or discoloration which indicates a strength decrease to the point where it affects integrity of the seat(s) is not allowed.

(2) Tears, cuts, or holes greater than one inch in length or diameter are not allowed.

b. Inspect cushions for tears and fraying. Comfort is the determining factor for replacement of the seatback cushions.

c. Inspect raschel seat covers for installation date, markings and service life criteria. Refer to TM 1-1500-204-23.

2-87. REMOVAL — PILOT AND COPILOT SEATS. Remove screws, washers and nuts securing seat bottom (21, figure 2-13) to supports.

2-88. REPAIR — PILOT AND COPILOT SEATS.

a. Tears, cuts or holes less than **1.000** inch in length or diameter in netting may be repaired by a darning procedure which picks up at least **0.250** inch of good material adjacent to or surrounding the cut, tear or hole. While mending, the thread tension should be maintained so as to produce a mend which disturbs as little as possible the natural lines of the seat netting adjacent to the mend. Type 1 thread (C149) or equivalent is used for repairs, This should be used only as a temporary repair, until new raschel covers can be installed.

b. Replace raschel kit seat covers as follows:

NOTE

Utilize seat cover manufacturer's installation instructions, if provided.

(1) Remove nylon cord securing bottom seat cover. Remove cover from seat support.

CAUTION

Additional pull cords may be used. Use tools with smooth jaws for clamping cords. Serrated jaws will damage the cord. Do not use safety wire. Damage can result to the grommets. Contact between metal reinforced area of the cover and the seat frame (bottom area of seat) is not cause for rejection if the reinforced area is inboard of tube center.

(2) Install cover on seat support and secure with new nylon cord laced through reinforcing eyes. Tighten to desired tension.

(3) The seat shall not deflect more than **2.000** inches with a load of approximately **166** pounds acting downward and uniformly distributed over the top panel. This may be accomplished by using an occupant, shot bags, or other high density material. Care should be taken when using shot bags or other high density material to place them in such a manner as to represent an occupant.

NOTE

Raschel covers may stretch after initial installation. Seat cover tension must be maintained to ensure support for occupant.

2-89. INSTALLATION — PILOT AND COPILOT SEATS.

a. Install seatback cushions (23, figure 2-13) by mating snap fasteners with fasteners on seatback support.

b. Install seat bottom (21) on seat support with screws and washers.

c. Refer to figure 2-31 for honeycomb panel repair.

2-90. PASSENGER SEATS.

2-91. DESCRIPTION — PASSENGER SEATS. The passenger seats are constructed of aluminum honeycomb panels and form an integral part of the airframe. The center panel of the seat back is removable to gain access to the fuel cell. Seats are equipped with shoulder harness, safety belts and cushions. Seating is provided for two passengers or without seats, space is provided for cargo.

WARNING

If helicopter is to be flown with passenger seat belts removed, passenger seat and back cushions must be removed.

2-92. INSPECTION — PASSENGER SEATS.

a. Inspect panels for cracks, dents and damage. If crack in panel is suspected, refer to TM 1-1520-254-23, Technical Manual Aviation Unit Maintenance (AVUM) and Aviation Intermediate Maintenance (AVIM) Manual Nondestructive Inspection Procedures for OH-58 Helicopter Series.

b. Inspect cushions for cleanliness, tears, fraying and loose or damaged fabric or metal fasteners.

c. Inspect cushion restraining loops, tabs and safety ties for proper installation, condition and security. Ensure seat belts are through loops and safety tied with nylon cord through slot in end fitting.

d. Inspect tape fastener on cushion support structure for damage, cleanliness and security. Fastener tape which fails to hold cushion in position should be replaced.

e. Cushions with damaged or worn tape fasteners, restraining loops or tabs should be replaced.

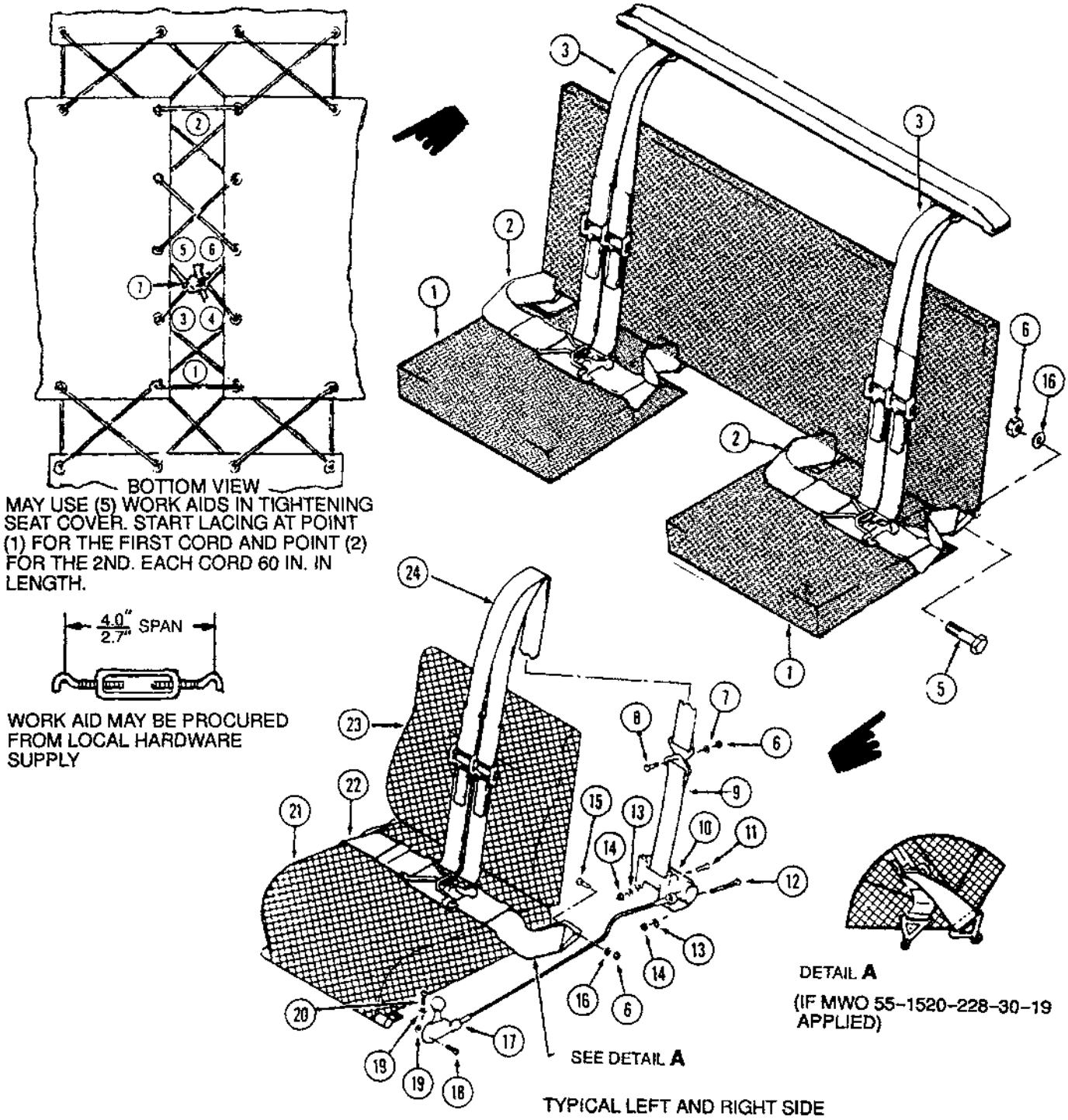

1. Cushioning Pad
2. Lap Belt Assembly
3. Shoulder Harness
4. Cushion Assembly
5. Bolt
6. Nut
7. Washer
8. Bolt
9. Strap Assembly
10. Reel Assembly
11. Screw
12. Screw
13. Washer
14. Nut
15. Bolt
16. Washer
17. Control Assembly
18. Screw
19. Washer
20. Screw
21. Cushion Assembly
22. Lap Belt Assembly
23. Cushion Assembly
24. Shoulder Harness

Figure 2-13. Seats and Restraint Installation

2-93. REMOVAL — PASSENGER SEATS.

a. Remove seat cushions (1, figure 2-13) as follows:

(1) Remove nylon cord safety ties from restraining loops and seat belt and fittings.

(2) Lift cushion to release fabric and metal fasteners.

(3) Slide restraining loops off of the seat belts and remove cushion.

b. Remove back cushion (4) as follows:

(1) Remove nylon cord safety ties from restraining loops on the bottom of cushion and the seat belt end fittings.

(2) Remove screws and washers which secure tabs on top of cushion to the bulkhead.

(3) Pull cushion to release snap and fabric fasteners.

(4) Slide restraining loops off of the seat belts and remove cushion.

2-94. REPAIR — PASSENGER SEATS.

a. Honeycomb panel repair is accomplished as outlined in paragraphs 2-179 and 2-184.

b. Seat cushion repairs. Refer to TM 1-1500-204-23 for repair.

c. Remove damaged/worn tape fasteners from seat structure.

(1) Using a blunt scraper (plastic or wood) work edge of tape fastener loose and pull tape fastener from seat structure.

WARNING

Acetone is extremely flammable and toxic to eyes, skin, and respiratory tract. Wear protective gloves and goggles/face shield. Avoid repeated or prolonged contact. Use only in well-ventilated areas (or use approved respirator as determined by local safety/industrial hygiene personnel). Keep away from open flames, sparks, hot surfaces or other sources of ignition.

(2) Remove adhesive residue using abrasive cloth (C45) or a clean scraper. Wipe clean residue, using clean cheesecloth (C37) dampened with acetone (C2).

(3) Cut tape, fastener, hook (C140) or tape fastener, pile (C141) to length; either item may be installed on seat structure as required for the cushion. Apply adhesive (C12) following directions on container and press tape fastener, hook or pile into position. Refer to figure 2-15.

(4) Allow adhesive to cure before engaging tape fasteners.

d. Seat belt anchor damage repair and prevention. Repair any negligible honeycomb panel damage per directions in paragraph 2-179. To prevent further damage from seat belt anchor fittings, add doublers to areas subject to damage (figure 2-16).

(1) Fabricate doublers (two required) from **0.040** inch thickness type 302 stainless steel, to approximate size **2.0 x 1.8** inches.

(2) Form doublers to shape of top of seat panel (figure 2-16).

(3) Clean up areas where doublers will be installed. Bond doublers in place, using adhesive (C19).

2-95. INSTALLATION — PASSENGER SEATS.

NOTE

Inspect cushion and corresponding attachment on the aircraft to ascertain that the fastener hook is installed in one location and the fastener pile in the other. Either hook or pile may be installed in any location. The installation must be such that a hook and pile mate at each fastener location. If necessary replace seat fasteners. Refer to paragraph 2-94.

a. Position seat and back panels and secure in place with screws and washers.

b. Install seat cushion (1).

(1) Feed seat belts through loops on corners of cushion.

(2) Position cushion and secure metal and fabric fasteners.

NOTE

Ensure seat belts are through restraining loops of both seat and back cushions before installing safety ties. Safety ties are required in four places.

(3) Install new nylon cord (C48) safety ties cut to a length of **15** inches. Sear ends and feed cord through both loops (one from seat and one from back cushions) and slot in seat belt end fitting. Tie in a square knot, tie an additional overhand knot in each end and pull down against square knot.

c. Install back cushion (4).

(1) Position cushion and install screws with washers through grommets in tabs on back of cushion to bulkhead. Refer to figure 2-15.

(2) Feed seat belts through respective restraining loops on bottom of cushion.

(3) Fasten metal and fabric fasteners.

(4) Install safety ties. Refer to step (3) for seat cushion installation.

2-96. RESTRAINT EQUIPMENT.

WARNING

Cotton restraint equipment is not authorized.

2-97. DESCRIPTION — RESTRAINT EQUIPMENT. The crew and passenger restraint systems consist of shoulder harness and safety belts for each location. In addition, each pilots shoulder harness is connected to an inertia reel by a webbed strap.

2-98. SEAT BELTS.

2-99. DESCRIPTION — SEAT BELTS. Seat belts for pilot, copilot, and two passengers are secured to seat structure at each position.

2-100. INSPECTION — SEAT BELTS.

a. Inspect belts for cuts, fraying and loose stitching and for buckle condition. Ensure that doublers (item 10, figure 2-14) are bonded adjacent to the four seat belt hinge supports. Refer to TM 1-1500-204-23.

b. Check to ensure correct installation of webbing retarder spring. Refer to TM 1-1500-204-23.

c. Inspect ends of upper and lower seat belt support assemblies P/N 206-032-153-3 and 206-032-153-1 for evidence of proper crimping. If seat belt support assembly crimps appear insufficient to keep pins captive, apply adhesive (C12) or equivalent to the end of the seat belt support assemblies so as to retain hinge pins while maintaining hinge movement.

2-101. REMOVAL — SEAT BELTS.

WARNING

If helicopter is to be flown with passenger seat belts removed, passenger seat and back cushions must be removed.

a. Removal — aft seat belts (passengers).

(1) Remove nylon cord safety ties from seat belt end fittings.

(2) Remove bolts (5, figure 2-13), washers (16), and nuts (6) at attach fitting.

(3) Slide belt end fitting from cushion retainer loops and remove belt (2).

b. Removal — forward belts (pilot or copilot).

(1) Remove nut (2, figure 2-14), washer (3), bolt (6).

(2) Remove nut (8) from bolt (6) on bulkhead support fitting (9).

(3) Remove bolt (6) with washer (3) and remove seat belt.

2-102. INSTALLATION — SEAT BELTS.

WARNING

Seat belt end fittings must be through seat and back cushion retainer loops. The loops must be secured to the end fitting with a nylon cord safety tie.

a. Installation — aft seat belts (passenger).

(1) Position belts so release latch lever is as shown on figure 2-13.

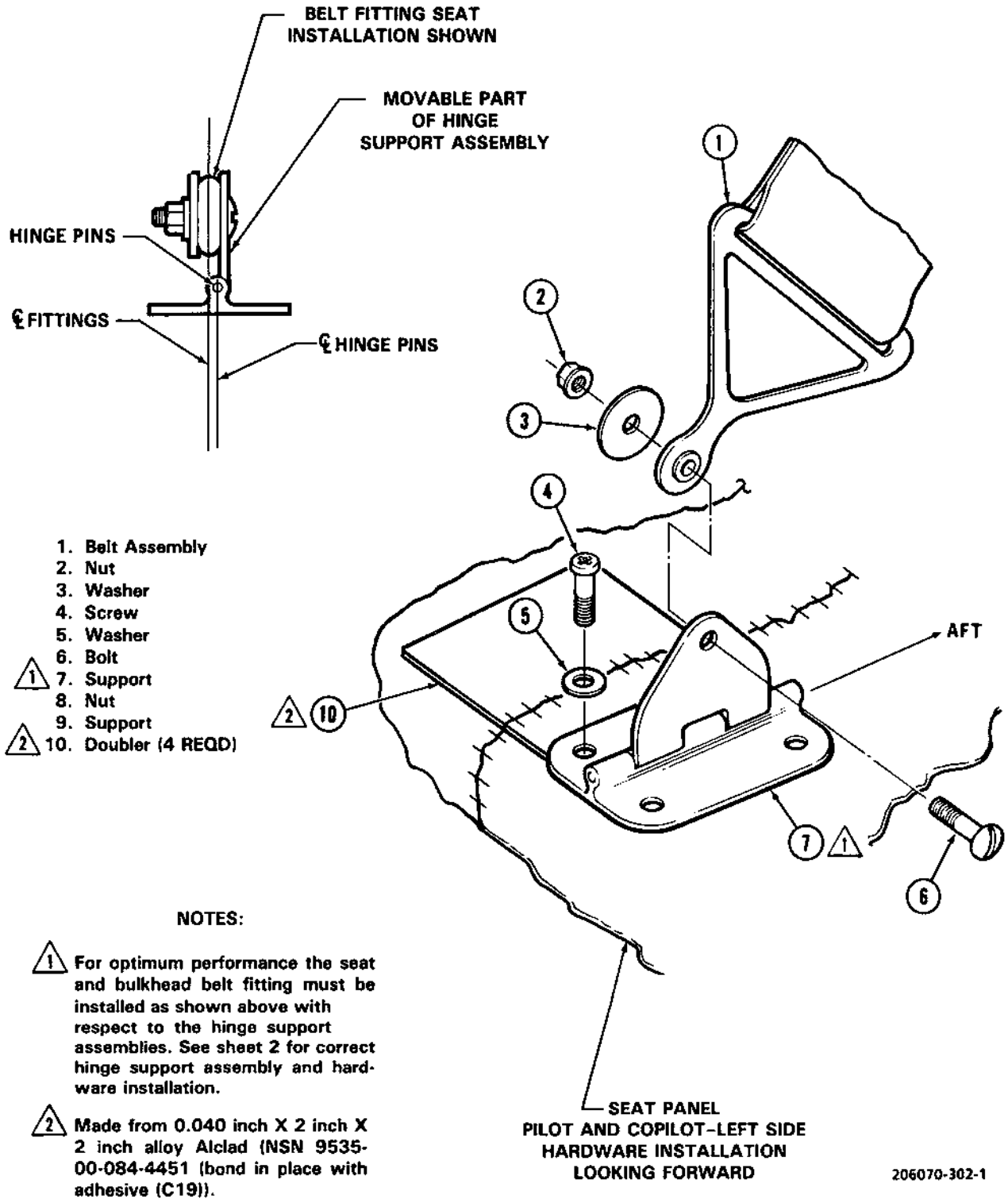

Figure 2-14. Crew and Passenger Seat Belt Installation (Sheet 1 of 2)

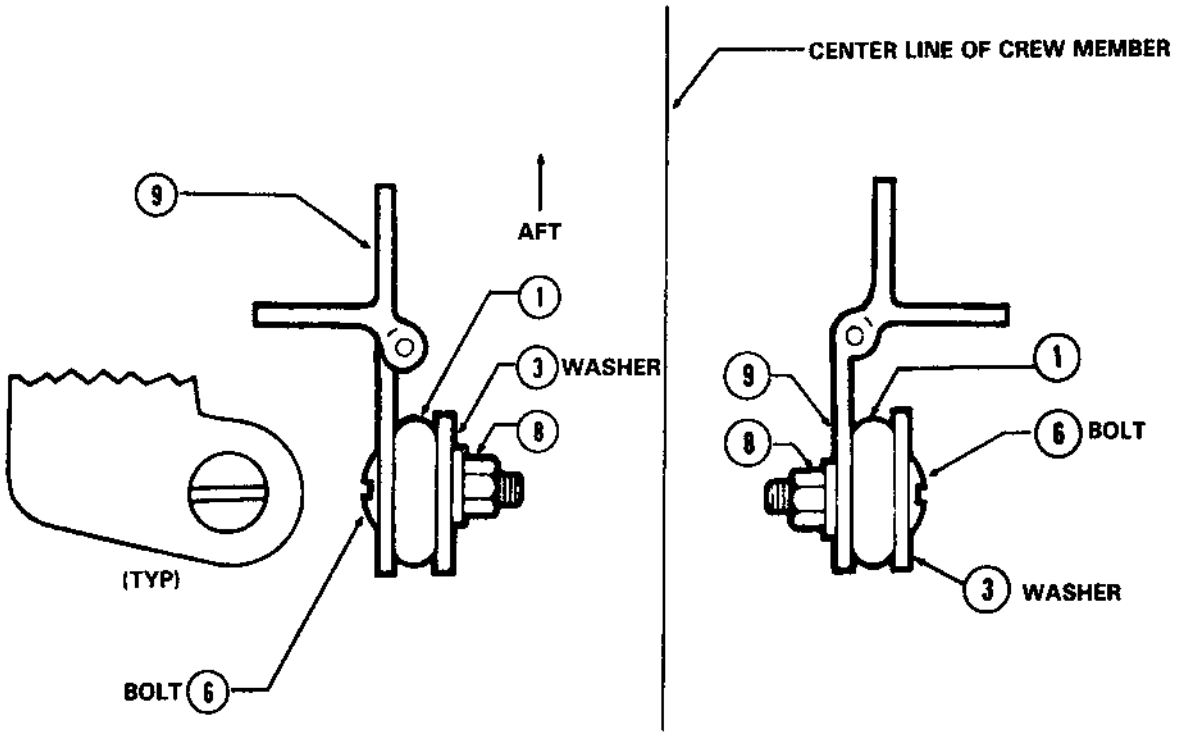

BULKHEAD INSTALLATION, LOOKING DOWN
INSTALL HINGE ASSEMBLIES AND HARDWARE AS SHOWN.

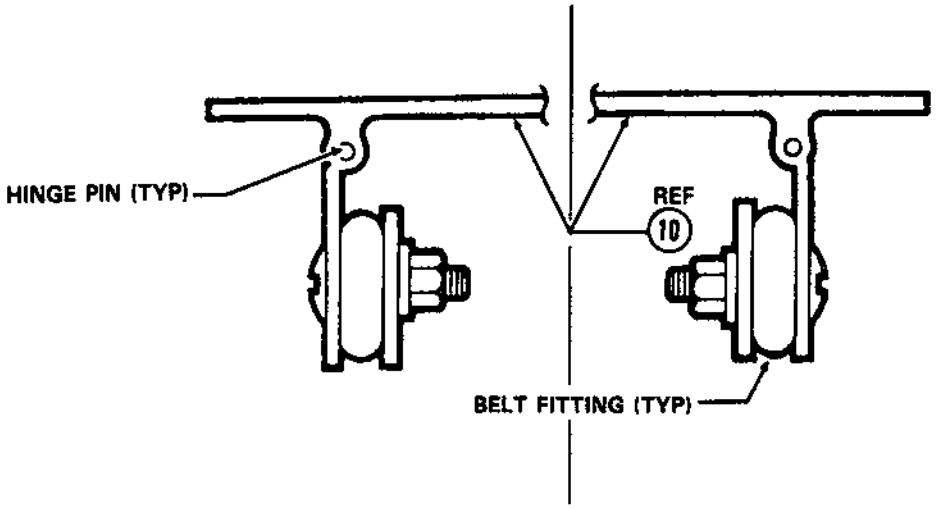

SEAT INSTALLATION, LOOKING AFT
INSTALL HINGE SUPPORT ASSEMBLIES
AND HARDWARE AS SHOWN.

206070-302-2

Figure 2-14. Crew and Passenger Seat Belt Installation (Sheet 2 of 2)

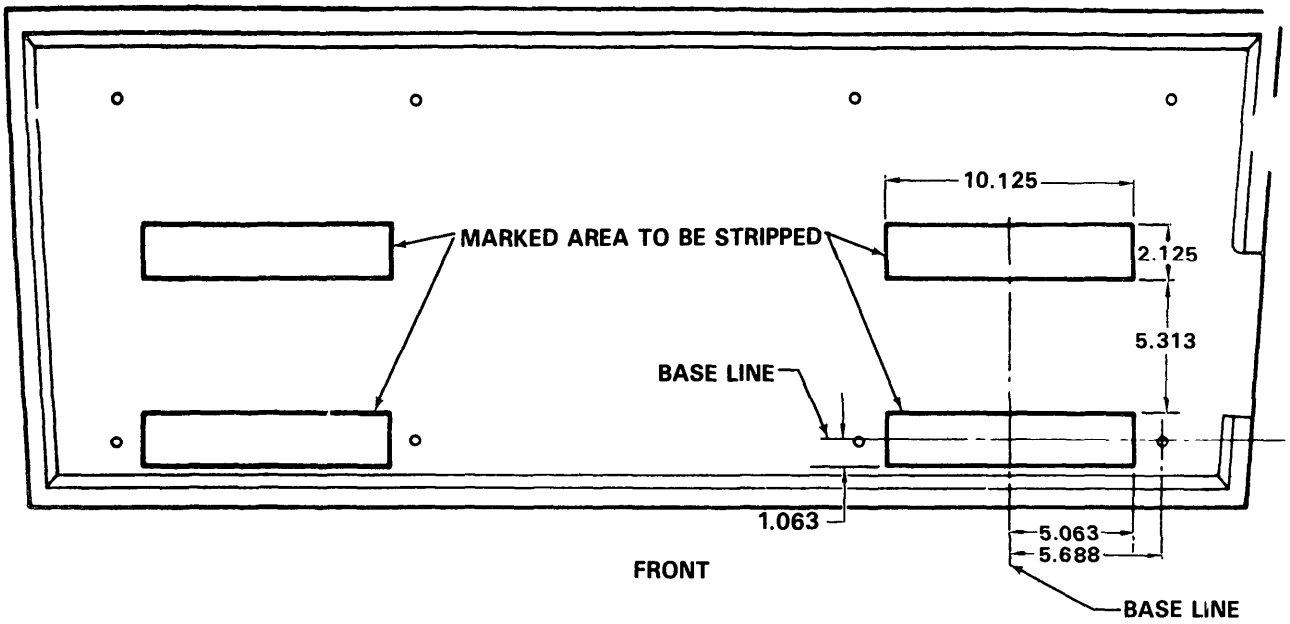

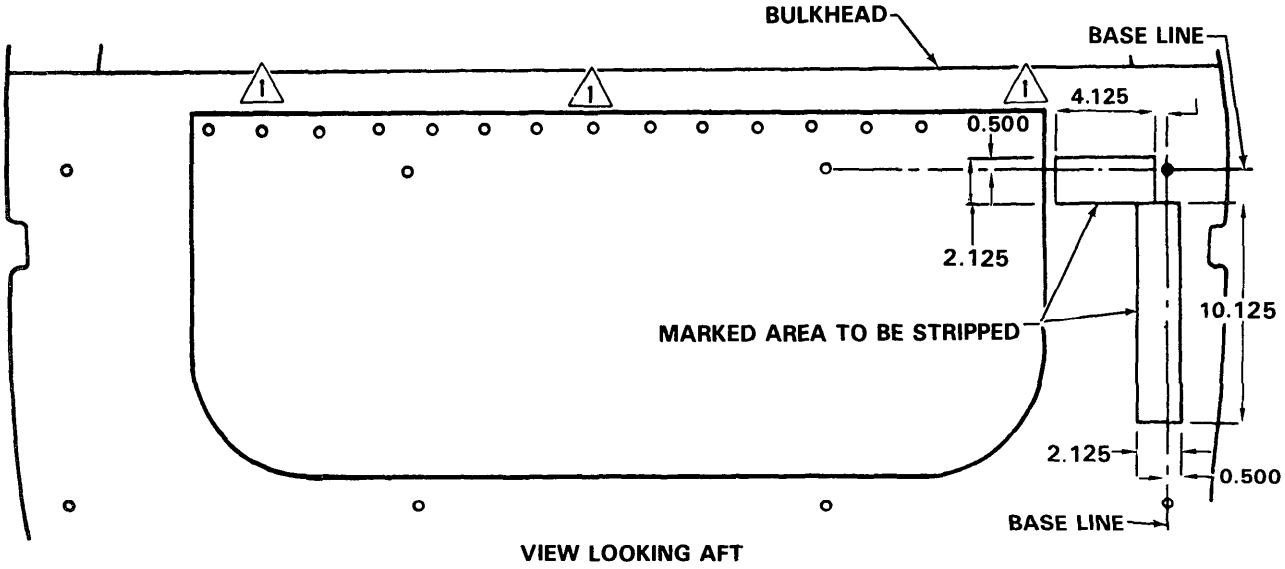

NOTE: Location measurement typical both sides showing area to be stripped.

1. Fasten tabs here with new bulkhead screws.
2. All dimensions are in inches.
3. Location measurements typical both sides.

206070-303

Figure 2-15. Fastener Tape Location

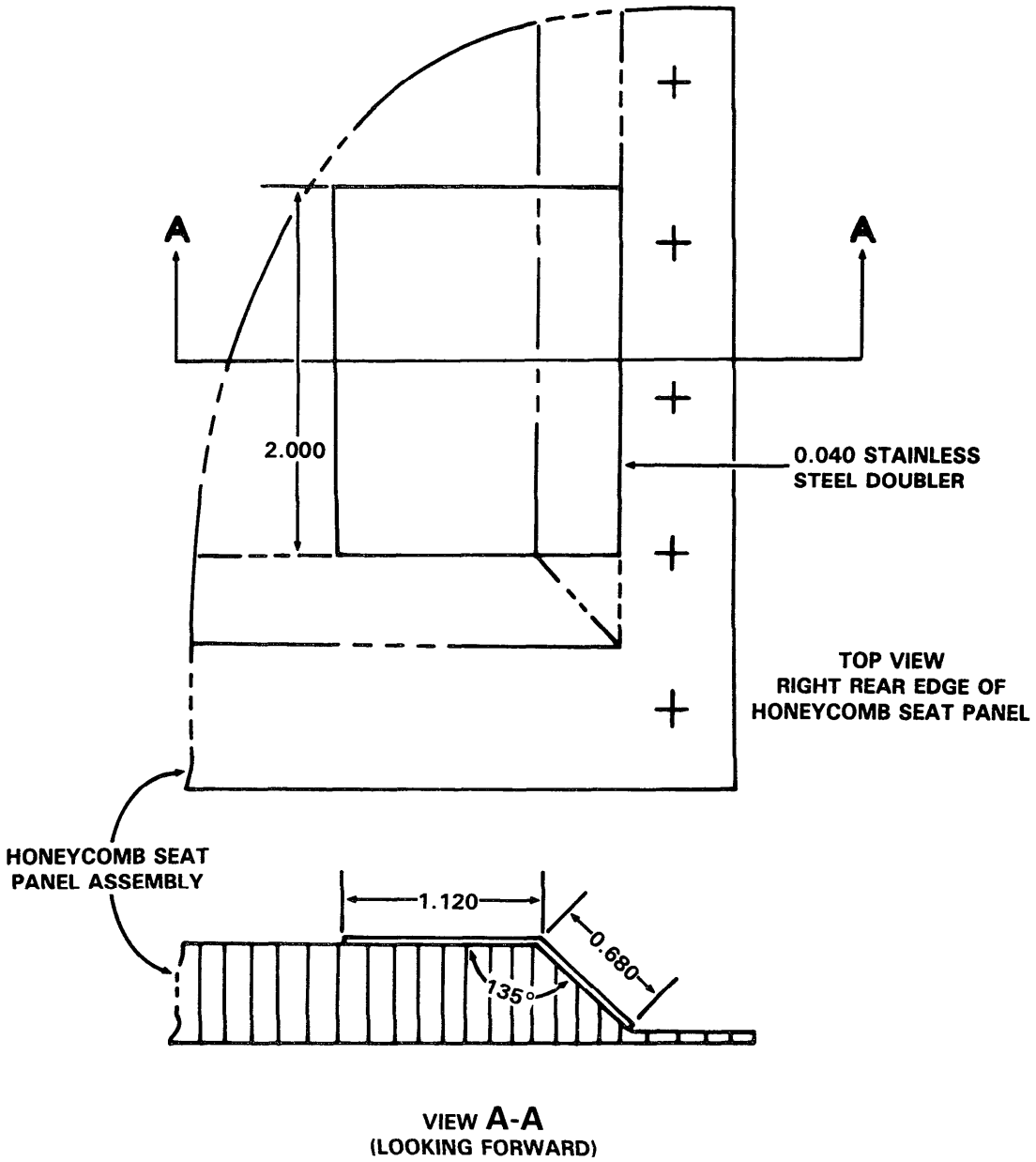

NOTE:
All dimensions are in inches.

(RIGHT SIDE INSTALLATION SHOWN; LEFT SIDE INSTALLATION SIMILAR)

206070-304

Figure 2-16. Installation of Doubler to Passenger Seat Panel

(2) Slide seat belt end fitting through seat and back cushion retainers.

(3) Insert bolt (5) through stationary fitting (from the outboard side), mount seat belt end fitting, place washer (16) on bolt and secure with nut (6).

(4) Secure seat and back cushion retainer loops to seat belt end fittings, use new nylon cord (C48) safety ties cut to a length of **15** inches, sear ends. Feed cord through both loops and slot in end fitting. Tie cord in a square knot, put an additional overhand knot in each end of cord, slide down against square knot, and pull tight.

b. Installation — forward seat belts (pilot or copilot).

(1) Position belts so release latch lever is as shown on figure 2-13.

(2) Install bolt (6, figure 2-14) through support (7) and belt end fitting (1). Install washer (3) and secure with nut (2).

(3) Secure belt to bulkhead support fitting by installed bolt (6) through support (9) belt end assembly (1). Install washer (3) and secure with nut (8).

2-103. SHOULDER HARNESS.

2-104. DESCRIPTION — SHOULDER HARNESS. Web type shoulder harness is provided for each crew member and passenger seat. The forward harness attaches to an inertia reel and passenger harness is secured to a support assembly.

2-105. INSPECTION — SHOULDER HARNESS.

a. Inspect strap for cuts, fraying and loose stitching and buckle condition. Refer to TM 1-1500-204-23.

b. Check to ensure correct installation of webbing retarder spring. Refer to TM 1-1500-204-23.

2-106. REMOVAL — SHOULDER HARNESS.

a. Remove aft shoulder harness (3, figure 2-13), by removing soundproof blanket and remove screw, washer, and nut securing harness to support assembly.

b. Remove forward shoulder harness (24) by removing bolt (8), washer (7), and nut (6) attaching harness to inertia reel strap assembly (9).

2-107. INSTALLATION — SHOULDER HARNESS.

a. Install aft shoulder harness (3, figure 2-13) at support assembly with screw, washer, and nut and install soundproof blanket.

b. Install forward shoulder harness (24) over seat support assembly and secure with bolt (8), washer (7), and nut (6) to inertia reel strap (9).

2-108. INERTIA REEL.

2-109. DESCRIPTION — INERTIA REEL. An inertia reel, with a manually operated control handle, is incorporated on copilot and pilot seats. The inertia reel is a mechanical restraining device designed to hold pilot in a normal seated position during any maneuver which would tend to pitch the pilot forward. Each reel is connected to a shoulder harness with a web strap. An automatic locking mechanism, a webbing roller, and a manual control are incorporated in each unit.

2-110. INSPECTION — INERTIA REEL.

a. Inspect reel assembly (10, figure 2-13) for cracks and damage to housing.

b. Inspect shoulder harness for security of attachment to seat and to reel webbing. Inspect inertia reel for security and attachment to floor structure.

c. Place manual control handle in AUTO position. Disconnect shoulder harness from reel webbing, attach spring scale to end of reel webbing and, while watching scale, slowly pull length of webbing out of inertia reel. The tension indicated should be not less than **2** initially nor more than **6** pounds when the final increment is pulled out of the reel.

d. Cycle control handle from AUTO to MANUAL several times as the reel webbing is being reeled in and out. The reel shall positively lock and hold each time the handle is moved to MANUAL.

2-111. REMOVAL — INERTIA REEL.

a. Remove forward panels to gain access.

b. Disconnect control assembly (17, Figure 2-13) from seat.

c. Remove bolt (8), washer (7), and nut (6), attaching shoulder harness (24) to strap assembly (9).

d. Remove screws (11 and 12), washers (13), and nuts (14), securing reel assembly (10) to airframe.

2-112. REPAIR — INERTIA REEL. Replace if inertia reel fails inspection.

2-113. INSTALLATION — INERTIA REEL.

a. Secure reel assembly (10, Figure 2-13) to airframe with screws (11 and 12), washers (13), and nuts (14). Secure control assembly (17) to reel assembly (10) and lockwire (C95) knurled nut.

b. Install shoulder harness (24) to strap assembly (9) with screw (8), washer (7), and nut (6).

c. Secure control assembly (17) to seat with screw (18), washer (19), and lockwire (C95) knurled nut.

d. Install forward seat panels.

2-114. INERTIAL REEL STRAP.

2-115. DESCRIPTION — INERTIA REEL STRAP. A web strap is used to connect inertia reel to shoulder harness.

2-116. INSPECTION — INERTIA REEL STRAP.

WARNING

If strap is dirty, do not attempt to clean. Even soap and water cleaning will lower strength and damage beyond repair.

a. Inspect strap for broken or frayed stitching and cuts, especially where strap is retained in main shaft. Refer to TM 1-1500-204-23.

b. Inspect for end fitting (2, Figure 2-17) wear; hole in end fitting shall measure **0.265 to 0.270** inch.

2-117. REMOVAL — INERTIA REEL STRAP.

a. Remove access tab (4, Figure 2-17) from spring shield (3) on power spring end of inertia reel assembly.

CAUTION

The power spring exerts a strong turning force on the main shaft. Care must be taken to prevent shaft from disengaging hex wrench and winding in rapidly. If reel is inadvertently released while strap is remove, replace entire reel assembly.

b. Fully extend strap (5) and retain in extended position by inserting a 7/32 hex wrench through access into main shaft socket. (See view A-A).

c. Push end of strap (5), in direction of arrow, (detail A), through slot in main shaft so that strap retaining insert (6) is loosened.

NOTE

Observe method of retaining strap in main shaft slot with strap retaining insert.

d. Remove strap retaining insert (6) and withdraw strap (5) from inertia reel (1).

e. Place strap retaining insert (6) into slot in main shaft so that main shaft will lock against insert. Remove hex wrench.

2-118. INSTALLATION — INERTIA REEL STRAP.

a. Insert 7/32 hex wrench through access into main shaft socket. Relieve force on and remove strap retaining insert (6, Figure 2-17).

CAUTION

The power spring exerts a strong turning force on the main shaft. Care must be taken to prevent shaft from disengaging hex wrench and winding in rapidly. If reel is inadvertently released while strap is remove, replace entire reel assembly.

b. Insert strap (5) through slot in main shaft and lock in place with strap retaining insert (6). (See detail A, Figure 2-17).

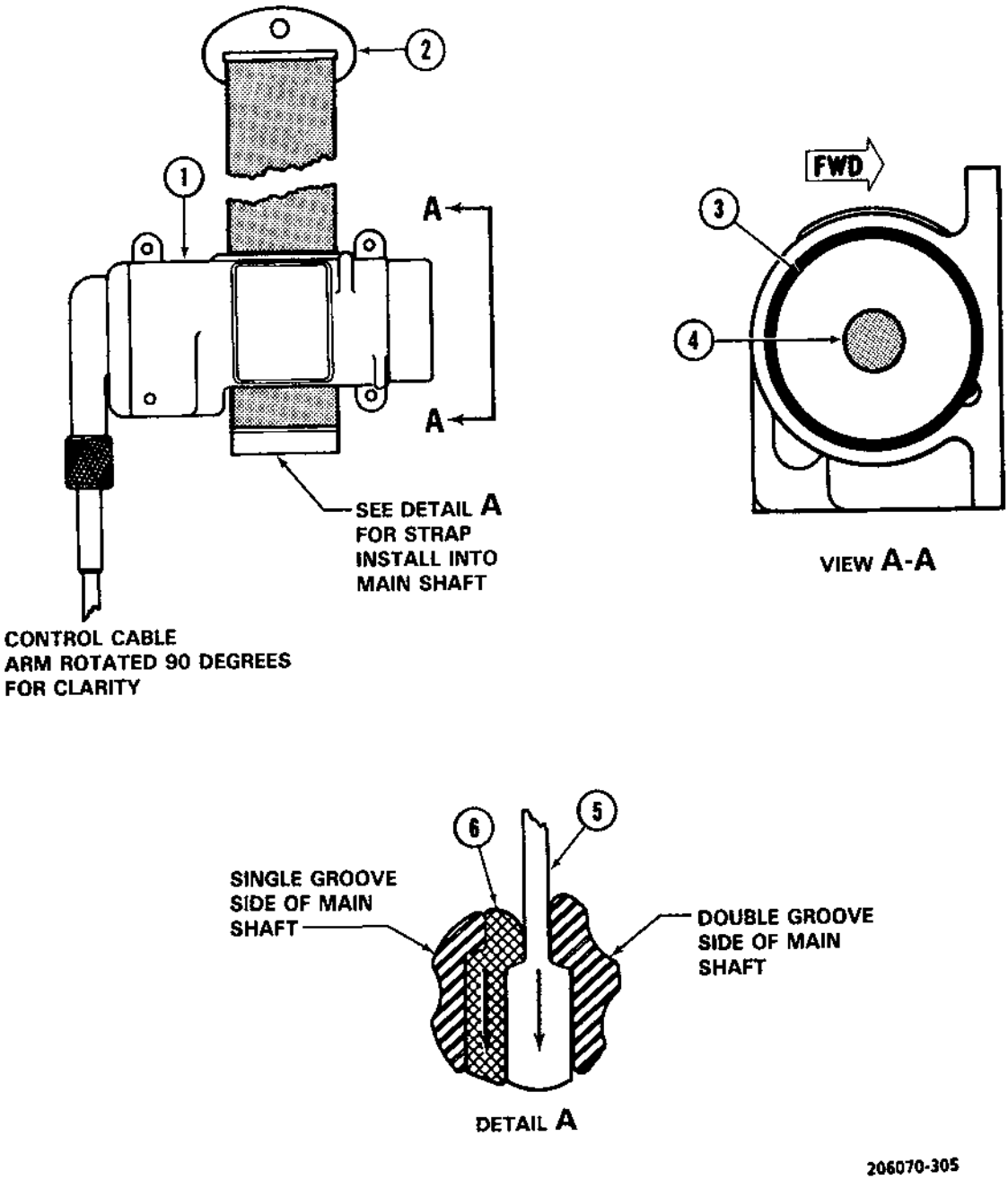

1. Inertia Reel
2. Strap End Fitting
3. Spring Shield
4. Access Tab
5. Strap
6. Strap Retaining Insert

Figure 2-17. Inertia Reel Strap Assembly Installation

NOTE

Install insert on single groove side of shaft.

c. Remove hex wrench and reinstall access tab (4) in spring shield (3).

2-119. FRAME ASSEMBLY.

Refer to paragraph 2-83.

2-120. INSPECTION — FRAME ASSEMBLY. Inspect pilots and copilots seat frame assembly for cracks, breaks, and security of mounting. No cracks are permitted.

2-121. REMOVAL — FRAME ASSEMBLY. Remove screws (20, figure 2-13) and washers (19). Remove frame assembly.

2-122. REPAIR — FRAME ASSEMBLY. Repair is limited to replacement of parts not meeting inspection requirements.

2-123. INSTALLATION — FRAME ASSEMBLY. Position frame assembly to floor and install washers (19) and screws (20).

2-124. ARMOR PANELS.

2-125. DESCRIPTION — ARMOR PANELS. The crew is protected against enemy fire by armor panels. The panels are bolted in place on the outboard and back sides of each seat and under each seat support. The outboard section is hinged at the rear for easy entry to and exit from the helicopter. A latch is provided to keep this panel in proper position during flight.

NOTE

On helicopters S/N 72-21070 and subsequent, and helicopters incorporating MWO 55-1520-228-30-16, an improved pilots seat armor panel installation is incorporated to improve the crashworthiness of the pilots seat.

2-126. INSPECTION — ARMOR PANELS.

WARNING

Armor panel can interfere with collective control if latch is excessively worn or loose.

a. Inspect all panels for security of attachment. Ensure latch pins extend into fitting a minimum of **0.250** inch below outboard edge of hole.

b. Visually inspect each panel for surface damage:

(1) Evidence of a hit by any ballistic projectile requires replacement of panel.

(2) Visible cracks longer than **0.250** inch are not acceptable.

(3) Small chips, not more than **0.250** inch diameter, at edges of ceramic faces of panel are acceptable and do not require repair.

(4) Damage that results in loose nylon cloth shield and/or loose neoprene rubber edge moulding mark loose areas for rebonding.

(5) Check delamination between non-metallic backing and ceramic facing.

2-127. REMOVAL (TEMPORARY) — ARMOR PANELS.

a. Remove bolts (16, figure 2-18) and washers (4) on each armor seat back panel (17). Remove panels.

CAUTION

The OH-58 series armor panels consist of a Fiberglass® backing bonded to a ceramic (boron carbide) covered with a Nylon Spall Shield. This ceramic is a very fragile material.

When removing these panels, handle with care and do not drop. Store on the panel edge after removal.

Stencil the following caution note on the backing side of all OH-58 series aircraft ceramic armor panels after these panels have been painted with low reflective black CARC paint (MIL-C-46168, Type II, Fed Std 595, color no. 37875).

Ceramic armor is fragile. Handle with care. Do not drop. When removed store on panel's edge.

Stencil the caution note with white CARC paint (MIL-C-46168, Type II, Fed Std 595, color no. 37875). The size of the letters shall be 1/4 inch high.

b. Remove screws (1) and washers (2) which attach armor plate hinge to airframe or remove screws (3), washers (4), and nuts (5) which attach hinge (6) to armor plate on each armor panel (14). Before removing panels, refer to the caution note cited above under paragraph 2-127a. Reinstall screws (1) and washers (2) which attach armor plate hinges to airframe.

c. Remove seats. Refer to paragraph 2-87.

d. Remove honeycomb structure plates under seats. Remove screws (18) and (7) and washers (2), and remove armor panels from underside of structure plates.

WARNING

Ensure Weight and Balance Records are updated to show true helicopter configuration when changes are made to the armor installation. In some cases, with armor removed, ballast will have to be added to maintain CG within limits to meet mission requirements.

2-128. REMOVAL (PERMANENT) — ARMOR PANELS. Crew left and right armor side panels, seat back armor panels, compressor armor, may be removed at the discretion of the unit commander. Applicable weight and balance changes shall be made to the helicopter Weight and Balance Records. Removed armor will be added to the helicopter inventory record.

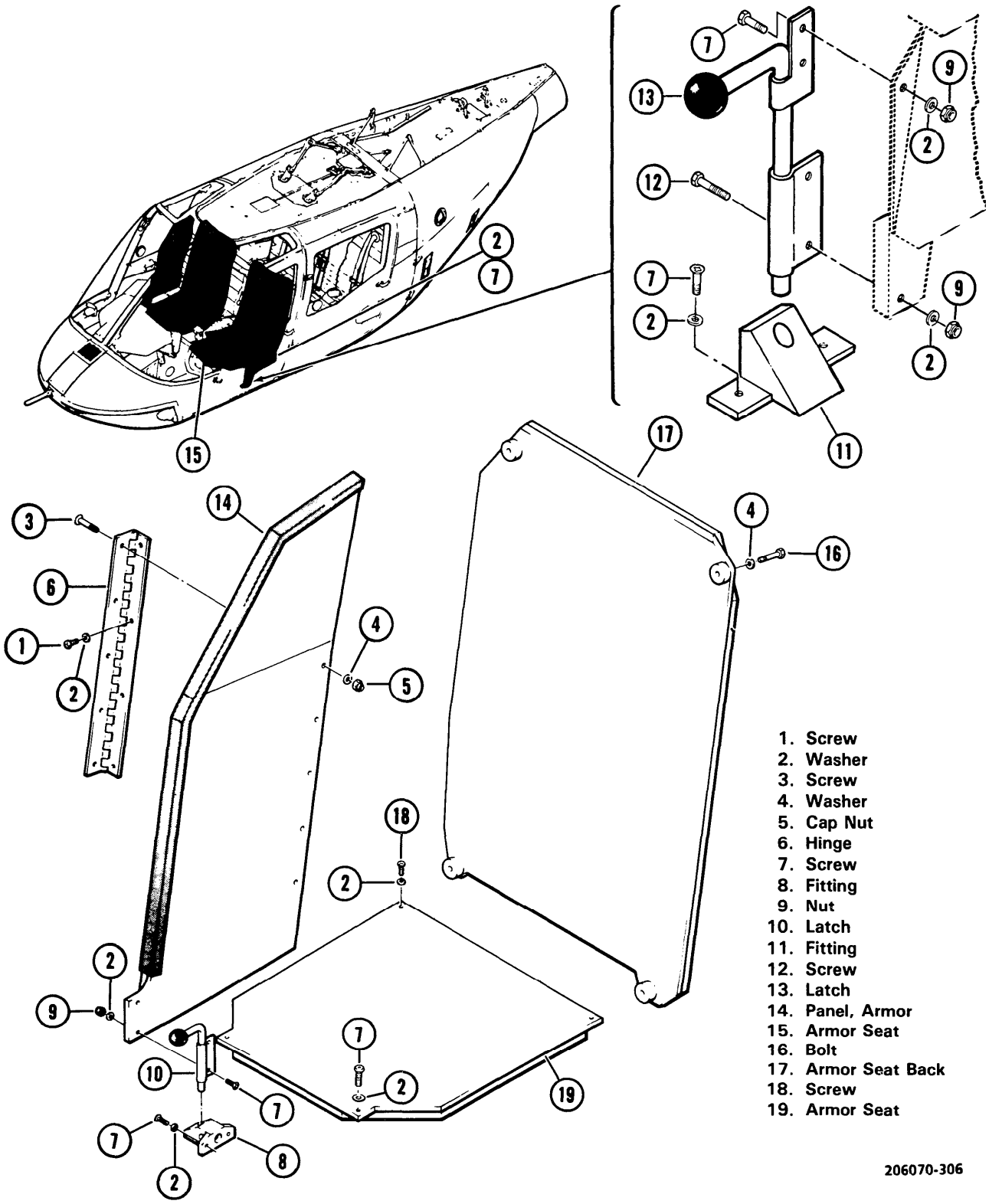

Figure 2-18. Pilot and Copilot Armor Installation

2-129. CLEANING — ARMOR PANELS.

WARNING

Degreasing Solvent is combustible and toxic to eyes, skin, and respiratory tract. Wear protective gloves and goggles/face shield. Avoid repeated or prolonged contact. Use only in well-ventilated areas (or use approved respirator as determined by local safety/industrial hygiene personnel). Keep away from open flames or other sources of ignition.

Clean armor panels with low-lint cleaning cloth (C45.1) dampened with degreasing solvent (C62). Wipe dry with ow-lint cleaning cloth (C45.1) prior to evaporation of degreasing solvent (C62).

2-130. REPAIR OR REPLACEMENT — ARMOR PANELS.

a. Repair is limited to replacement of any panel not meeting inspection criteria outlined in paragraph 2-126.

b. Rebond loose nylon cloth shield or neoprene rubber edge moulding with adhesive (C17.1).

2-131. INSTALLATION — ARMOR PANELS.

a. Position seat back panels (17, figure 2-18) in place and install bolts (16) and washers (4).

b. Position armor panels (14) in airframe and install screws (1) and washers (2).

c. Install armor seat panels (19) to structure plates with screws (18 and 7) and washers (2). Install structure plates to airframe.

d. Install seats. Refer to paragraph 2-89.

2-132. WINDSHIELDS AND WINDOWS.

2-133. DESCRIPTION — WINDSHIELDS AND WINDOWS. The windshield, door windows, and lower windows are constructed of acrylic plastic. The skylight windows in the roof are constructed of tinted polycarbonate plastic.

CAUTION

The EZ clear polishing system and polishing products referenced in TM 1-1500-204-23 are not to be used on the front windshields of OH-58 aircraft.

NOTE

Some windshields are constructed of polycarbonate plastic.

2-134. INSPECTION — WINDSHIELD AND WINDOWS. Inspect for abrasions, scratches, cracks, holes, distortion or other damage. Refer to Figure 2-19, 2-20, and 2-21 for critical areas and repair limits.

NOTE

Refer to paragraphs 2-365 and 2-367 for removal of windshield deflector assembly and to paragraph 2-356 for removal of doublers and aircraft equipped with the wire strike protection system.

2-135. REMOVAL — WINDSHIELDS AND WINDOWS.

a. Windshield (figure 2-23) A C Round Glass.

NOTE

Do not remove rivets from left BL9 (upper wire-strike area).

(1) Remove rivets securing retainers by grinding or filing rivet heads and removing rivets.

(2) If right windshield is being removed, remove free air temperature gage.

(3) Clean adhesive residue from supports and retainer strips by scraping with a piece of acrylic plastic.

b. Windshields (figure 2-22). C Flat Glass.

CAUTION

Do not remove plate (5) from helicopter. Retainer (2) and windshields (3) and (10) are secured under plate (5) with rivets. Remove only rivets securing retainer and damaged windshield. Removal of plate requires depot level maintenance.

NOTE

Cap (11) must be removed from helicopter to remove any windshield. Retainers (2), (9), and (12) are secured under cap.

(1) Remove rivets securing cap (11). Remove cap from helicopter.

(2) Remove rivets securing windshield under plate (5).

(3) Remove rivets from retainers securing damaged windshield. Remove retainers.

(4) If right forward windshield is being removed, remove free air temperature gage (4).

CAUTION

If heat is required to soften old adhesive, use head lamp only. Do not exceed 250°F (121°C) to avoid damaging other windshields or windows.

(5) Remove damaged windshield. If required use heat lamp to soften adhesive under plate (5).

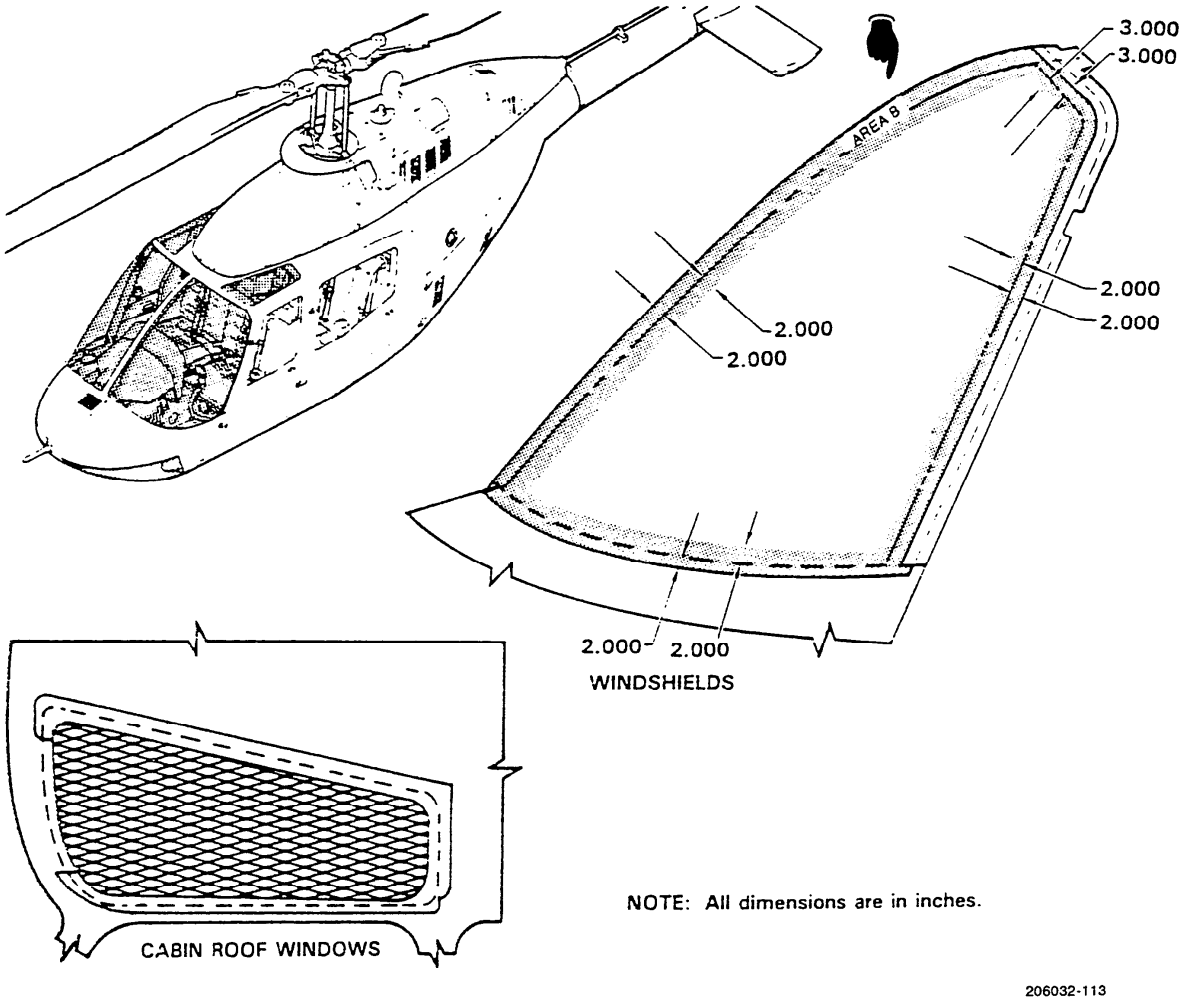

AREA A

Scratches and pits may be polished out to the extent that vision is not distorted. Distortion of vision is cause for replacement. Cracks, holes, or other damage may be temporarily repaired, if vision of crew members will not be impaired, by stop drilling, patching, or other approved methods (refer to TM 1-1500-204-23), but window must be replaced at the earliest opportunity.

AREA B

Scratches and pits may be polished out to the extent that vision is not distorted. Distortion of vision is cause for replacement. Cracks, holes, or other damage may be temporarily repaired, if vision of crew members will not be impaired, by stop drilling, patching, or other approved methods (refer to TM 1-1500-204-23), but window must be replaced at the earliest opportunity.

AREA C

Scratches and pits may be polished out to the extent that vision is not distorted. Distortion of vision is cause for replacement. Cracks, holes, or other damage may be temporarily repaired, if vision of crew members will not be impaired, by stop drilling, patching, or other approved methods (refer to TM 1-1500-204-23), but window must be replaced at the earliest opportunity.

Figure 2-19. Windshields and Cabin Roof Windows — Critical Areas Diagram A C Round Glass

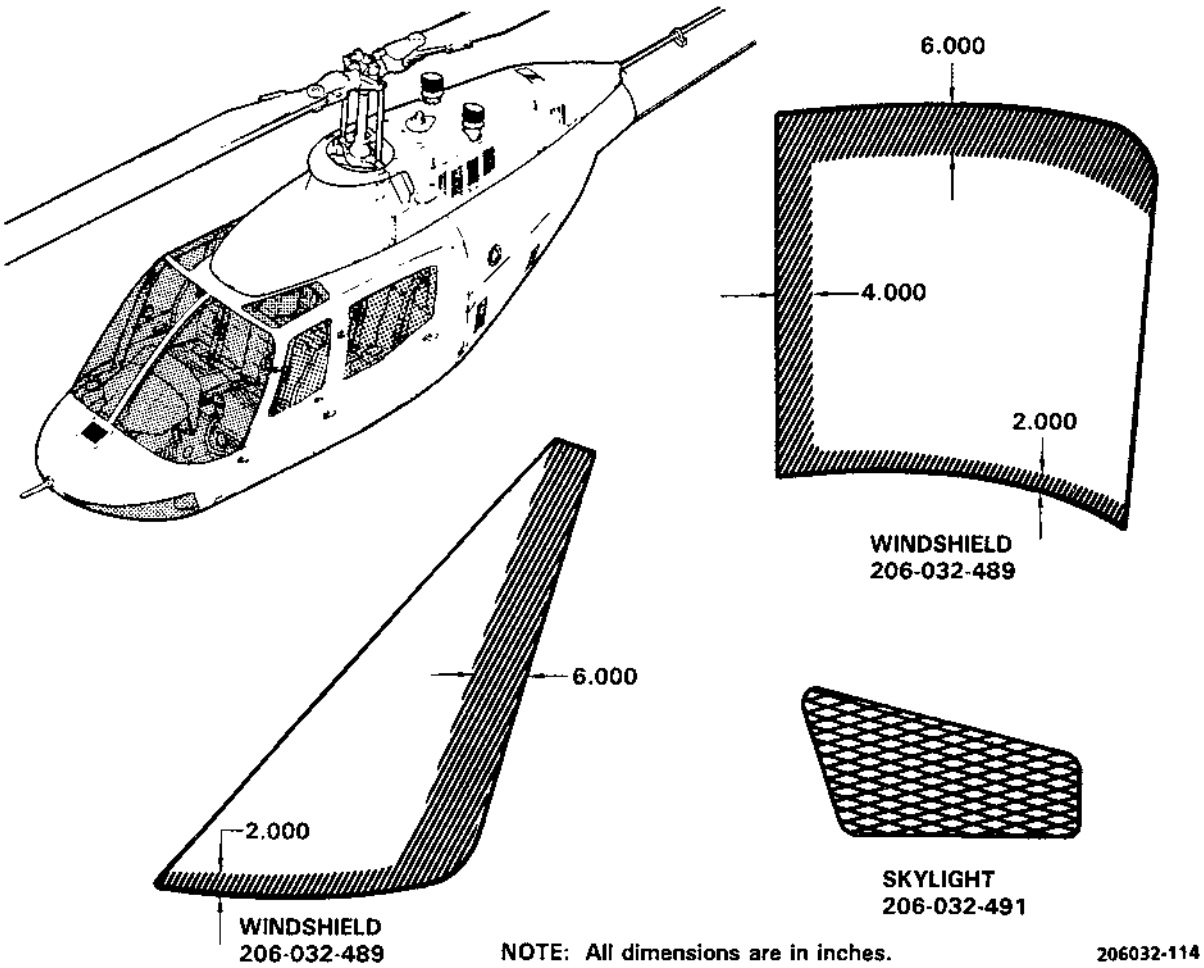

AREA A

Scratches and pits may be polished out to the extent that vision is not distorted. Distortion of vision is cause for replacement. Cracks, holes, or other damage may be temporarily repaired, if vision of crew members will not be impaired, by stop drilling, patching, or other approved methods (refer to TM 1-1500-204-23), but window must be replaced at the earliest opportunity.

AREA B

Scratches and pits are permitted in this area provided they are not so numerous or form such a pattern as to be objectionable to the viewer. Cracks, holes, or other damage may be temporarily repaired by stop drilling, patching, or other approved methods (refer to TM 1-1500-204-23), but window must be replaced at the earliest opportunity.

AREA C

Scratches and pits are permitted in this area, providing the structural integrity of the window is not impaired. Cracks, holes, or other damage may be repaired by stop drilling, patching, or other approved methods provided structural integrity is not impaired (refer to TM 1-1500-204-23). Window need not be replaced providing vision is not seriously impaired and window is waterproof.

Figure 2-20. Windshields and Cabin Roof Windows — Critical Areas Diagram C Flat Glass

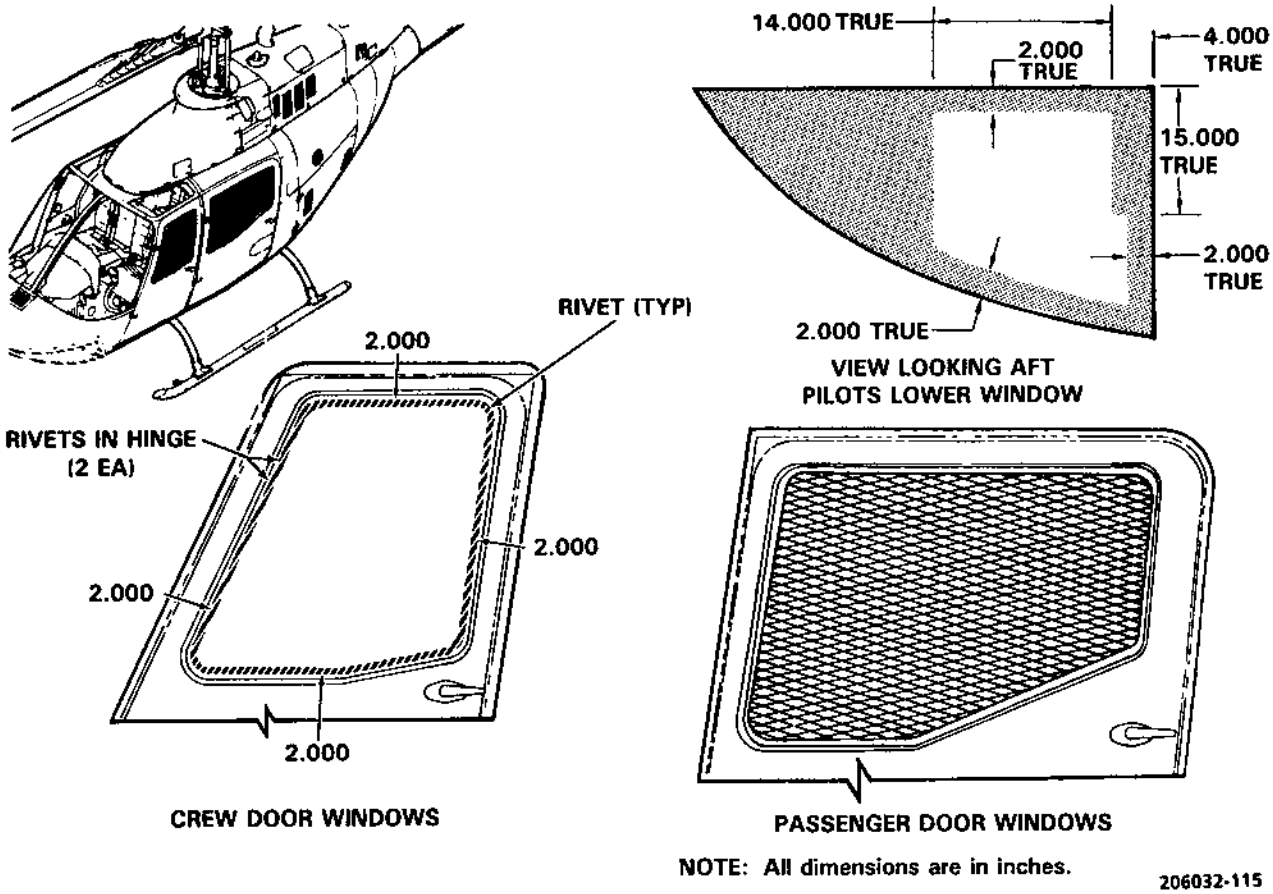

Area A — Scratches and pits may be polished out to the extent that vision is not distorted. Distortion of vision is cause for replacement. Cracks, holes, or other damage may be temporarily repaired, if vision of crew members will not be impaired, by stop drilling, patching. or other approved methods (refer to TM 1-1500-204-23), but window must be replaced at the earliest opportunity.

Area B — Scratches and pits are permitted in this area provided they are not so numerous or form such a pattern as to be objectionable to the viewer. Cracks, holes, or other damage may be temporarily repaired by stop drilling, patching, or other approved methods (refer to TM 1-1500-204-23).

Area C — Scratches and pits are permitted in this area, providing the structural integrity of the window is not impaired. Cracks, holes, or other damage may be permanently repaired by patching only. Window requires replacement if the 2.000 inch area cannot be repaired by patching (refer to TM 1-1500-204-25/1).

Area D — Scratches and pits are permitted in this area, providing the structural integrity of the window is not impaired. Cracks, holes, or other damage may be repaired by stop drilling, patching, or other approved methods provided structural integrity is not impaired (refer to TM 1-1500-204-23), and vision is not seriously impaired.

Figure 2-21. Windows — Critical Areas Diagram

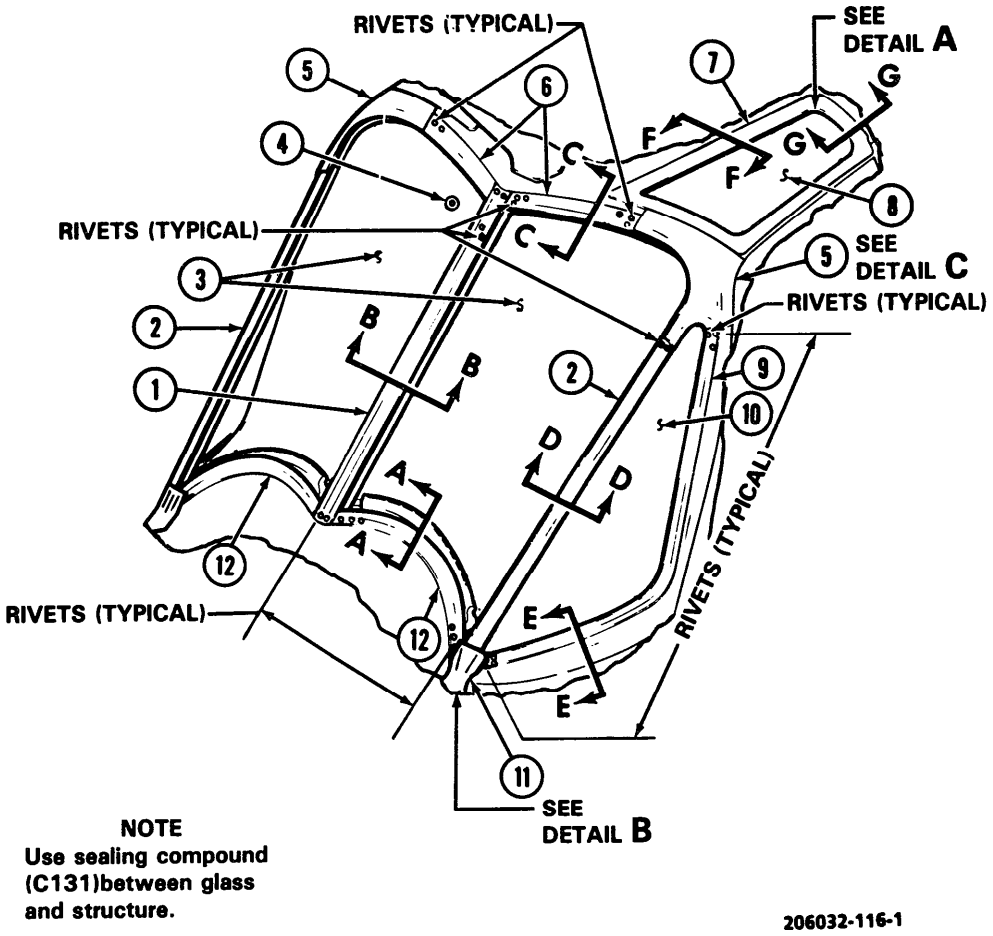

1. Retainer
2. Retainer
3. Forward Windshield
4. Free Air Temperature Gage
5. Plate
6. Retainer
7. Retainer
8. Skylight
9. Retainer
10. Side Windshield
11. Cap
12. Retainer

Figure 2-22. Windshields and Cabin Roof Windows Replacement C Flat Glass (Sheet 1 of 4)

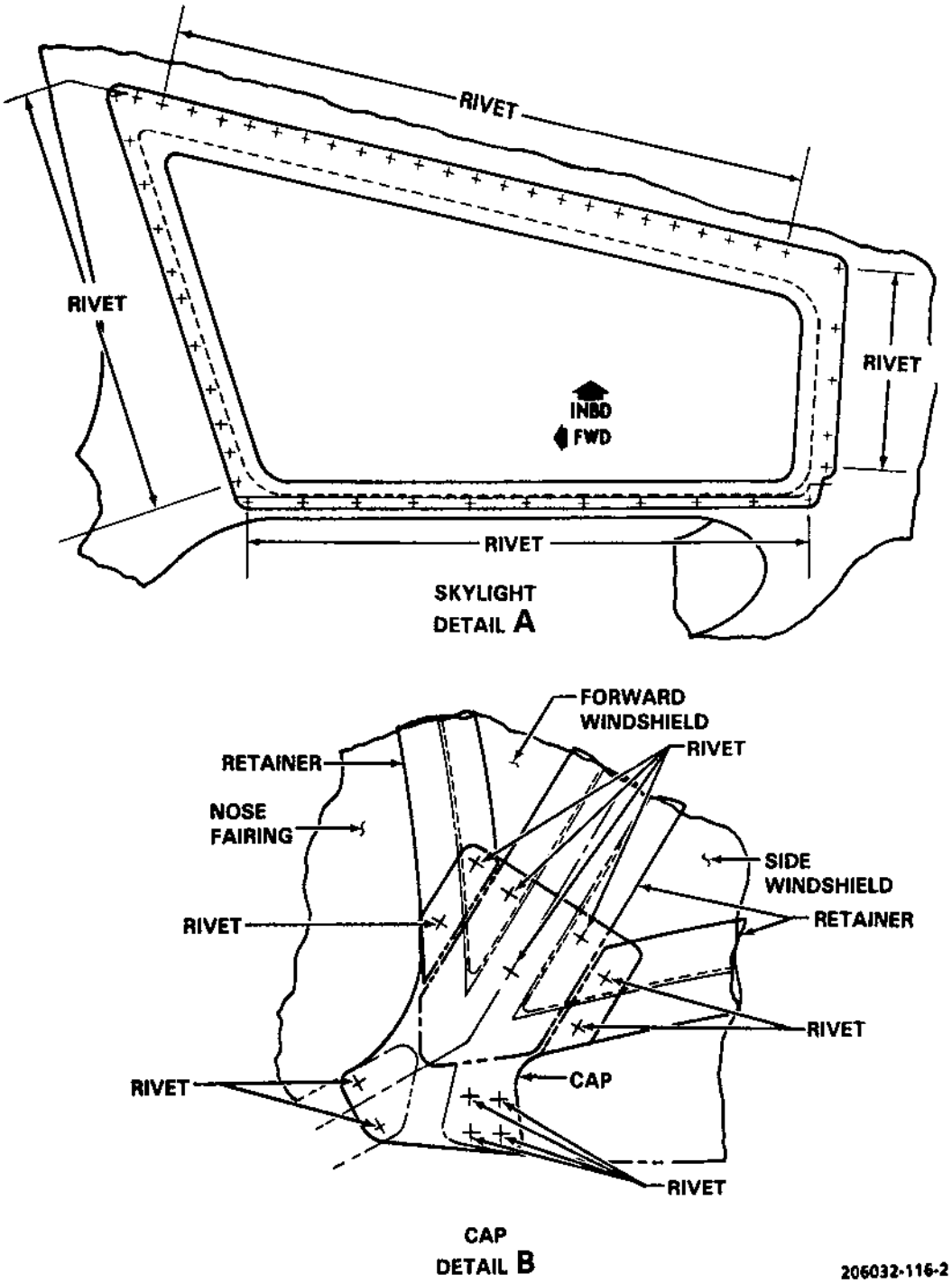

Figure 2-22. Windshields and Cabin Roof Windows Replacement C Flat Glass (Sheet 2 of 4)

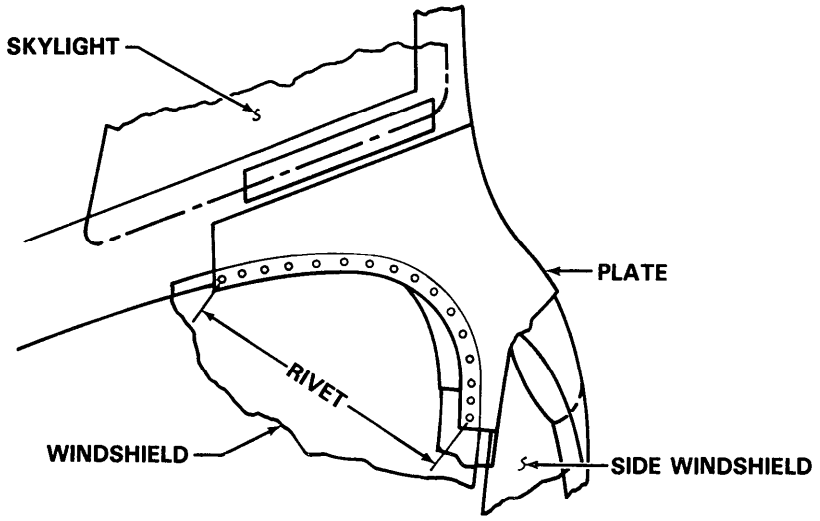

VIEW LOOKING DOWN, LEFT SIDE

NOTE

Remove only rivets securing glass. Removal of plate permitted only by depot level maintenance.

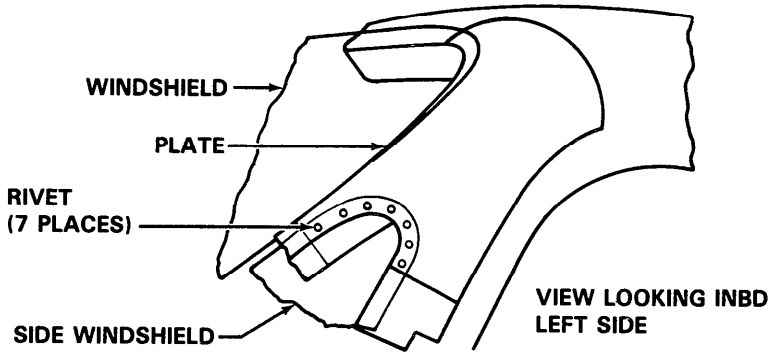

DETAIL C

206032-116-3

Figure 2-22. Windshields and Cabin Roof Windows Replacement C Flat Glass (Sheet 3 of 4)

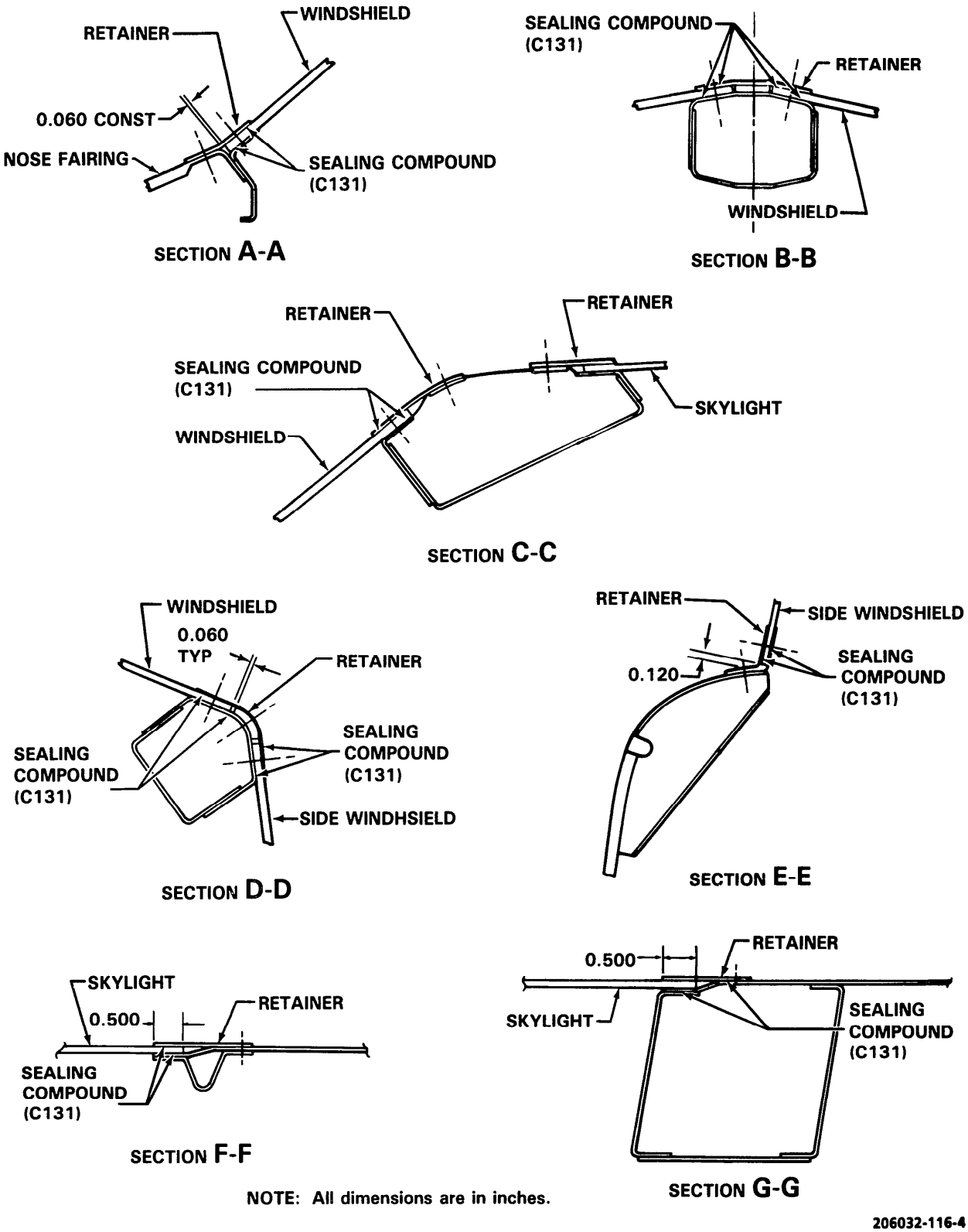

Figure 2-22. Windshields and Cabin Roof Windows Replacement C Flat Glass (Sheet 4 of 4)

(6) Clean adhesive residue from supports and retainers with a plastic scraper.

c. Windows.

(1) Remove rivets securing retainer strip to nose structure and remove lower window.

(2) Remove rivets securing retainer strip to roof and remove roof window.

2-136. REPAIR — WINDSHIELDS AND WINDOWS.

CAUTION

Do not use solvent on windows or windshields.

The EZ clear polishing system and polishing products referenced in TM 1-1500-204-23 are not to be used on the front windshields of OH-58 aircraft.

a. Repair acrylic plastic windshields and/or windows in accordance with TM 1-1500-204-23.

b. Repair polycarbonate windows and/or windshields as follows:

(1) Stop drill at each end of crack using a No. 40 drill.

(2) Lightly sand area to be repaired with sandpaper (C125) about **0.750** inch beyond crack for adhesive application.

(3) Wipe area with dry, clean, cloth to remove residue.

(4) Cut section of fiberglass cloth (C71) to extend a minimum of **0.500** inch around crack or area to be repaired.

(5) Apply one brush coat of urethane adhesive (C20) to repair area and lay fiberglass over repair area.

(6) Rub patch lightly to assure adhesion to repair area and brush another coat of adhesive over area.

(7) Allow to cure for **48** hours. (Handling strength is developed in **24** hours). Accelerated cure time will be two hours under a heat lamp at **160°F (71°C)**.

c. Repair water leaks by using a small bead of sealing compound (C131) on the affected area.

d. Minor scratches and mild distortion in area B of the cabin roof windows may be removed by using a small pad of cheesecloth (C37), with a small amount of brasso (C30). Work small areas of window at a time.

2-136.1. REPAIR-DOOR FRAME/WINDSHIELD FRAME ASSEMBLY. (ROUND GLASS)

NOTE

Repair of left and right door frame is identical except for the doubler on the left door frame. For this repair only the left door frame assembly is shown.

NOTE

Door frames do not have to be damaged to install nut plates and nutstrips.

NOTE

Only MS 20600 rivets will be used except metal to metal splices.

NOTE

Do not remove rivets from left BL9 to right BL9 (upper wirestrike area). Cut skylight retainer to follow conture of doubler.

a. Prepare aircraft for door frame repair as follows: Refer to figure 2-23.1.

(1) Remove windshield (1) and skylight window (2). Refer to para 2-135. Remove blind rivet lock rings by grinding or filing rivet heads and removing rivets.

(2) Remove crew door jettison mechanism (3). Refer to para 2-28. Remove door (4).

(3) Remove copilot seat (5). Refer to para 2-87.

(4) Remove armor panel (6) under copilot seat. Refer to para 2-127.

(5) Remove windshield defog nozzle (7) and air outlet duct (8) on copilot side of aircraft. Refer to para 13-35.

(6) Remove doubler (9) P/N 206-031-112-627 from left door frame. Remove blind rivet lock rings by grinding or filing rivet heads and removing rivets.

(7) Cut door seal as required.

b. Remove fiberglass door frame section as follows: Refer to figure 2-23.1.

(1) Remove rivets on BL17 splice.

(2) Remove door upper pivot point.

(3) Insert a piece of scrap metal between fiberglass section and metal door post.

CAUTION

Use extreme care when cutting fiberglass section to prevent damage to metal door frame.

(4) Using a hacksaw cut fiberglass door frame section at WL44 and station 64.

(5) Remove fiberglass section.

c. Install channel nut strip and nut plates on removed fiberglass section as follows: Refer to figure 2-23.1.

(1) Clean removed fiberglass section.

(2) Inspect removed fiberglass section.

(3) Repair any damage to fiberglass section or metal frame per TM 1-1500-204-23.

NOTE

BL9R to BL17R channel nut strip is not applicable after .

(4) Make aluminum strips for areas BL9 to BL17 and station 64 to station 79 for the center of the frame. Lightly lubricate strip and install with temporary fasteners. Fill rivet holes with epoxy between the following areas: fiberglass section, station 64 to station 79, WL 39 to WL44, and BL9 to BL17.

(5) Install nutplates on curvature areas as follows:

(a) Using a #10 drill bit, drill nutplate holes every 2.0 inch in center of frame.

(b) Drill and countersink nut plate mounting holes.

(c) Install fiberglass with CCR264SS-3-X rivets.

(6) Install fiberglass frame with temporary fastener.

(7) Cut channel nutstrip to fit the following areas: station 61 to station 79, WL39 to hinge point, hinge point to WL69.5, and BL9 to BL17.

NOTE

Allow enough channel at each end of channel nutstrip for trimming.

(8) Position channel nutstrip in the center section of the frame.

(9) Mark two holes at either end of channel nutstrip. Remove channel nutstrip and drill marks with a #40 drill bit.

(10) Reposition channel nutstrip in center of frame and hold in place with temporary fastener.

(11) Mark fiberglass frame to match channel nuts. Remove channel nutstrip and use #10 drill bit to drill holes.

(12) Remove fiberglass frame and install channel nutstrip and retaining screws. Trim channel at ends as required.

NOTE

Complete all channel nutstrip areas prior to step (13).

(13) Place a piece of cellophane tape on metal frame in areas to be spliced to prevent adhesive from bending the fiberglass and metal frames. Install fiberglass section, doubler, door jettison mechanism, hinge socket and splice where cut. Use epoxy repair kit (C12.1) for splice. Refer to figure 2-23.1.

(14) Install cut fiberglass frame with temporary fasteners.

(15) Drill and countersink mounting holes using a #40 drill bit (approximately every 6 inches).

(16) Install CCR265SS-3-X rivets in mounting holes.

(17) Remove retaining screws.

d. Install nutplates to bottom of windshield frame from BL2L, WL44, station 19 to station 46 WL39, BL25L, and BL4R, WL44 station 19 to station 46, WL39, BL25R as follows:

(1) Enlarge existing rivet holes to match nutplate hole.

(2) Drill and countersink nutplate mounting holes.

(3) Install nutplate with CCR64SS-3-X rivets.

(4) Install nutplates to match wirestrike angle clips from BL4R to BL2L.

e. Clean up all repair areas by removing all clippings, filings and sealant residue.

f. Install windshield defog nozzle and air outlet duct on copilot side of aircraft. Refer to para 13-37.

g. Install armor panel under copilot seat. Refer to para 2-131.

h. Install copilot seat. Refer to para 2-89.

i. Install skylight and retainer. On inboard area of retainer, install with #6 screws, washers and nuts. Install 6 rivets at aft end of skylight retainer. Install #8 screws where nutplates were installed.

NOTE

All screws will be sealed with sealant (C129).

Cut retainer to match wirestrike doubler.

j. Install windshield and retainer per para 2-137.

k. Install doors per para 2-15.

l. Touch-up paint as required refer to TM 55-1500-345-23.

m. Check Compass Compensation (Swinging) refer to TM 1-1500-204-23.

2-137. INSTALLATION — WINDSHIELD AND WINDOWS.

CAUTION

Exercise care when installing retainer strips to prevent bending or damage.

NOTE

Damaged door frames should be repaired per para 2-136.1, prior to installation of windshields.

Refer to paragraph 2-364 for installation of windshield deflector assembly on aircraft equipped with the wire strike protection system.

a. Windshield (figure 2-23). A C Round Glass.

NOTE

Space replacement windshields are polycarbonate and will require trimming prior to installation. When trimming the windshield, do not trim the inboard side; however, all other sides must be trimmed. Center the windshield using the inboard side as a reference and trim all other sides as required. Improper centering of the windshield is a major cause of distortion.

(1) Trim windshield to assure proper fit. Refer to TM 1-1500-204-23.

(2) Ensure fit and expansion gap by placing windshield on supports.

(3) Remove windshield and apply a thin even coat of adhesive (C16) to mating surfaces of window supports.

(4) Position windshield on supports. Fill all void areas between edge of windshield and supports with sealant (C131).

(5) Apply a thin even coat of sealant (C131) to mating surface of center windshield post retainer strip and secure retainer to center windshield post with screws, washers and nuts.

(6) Apply a thin coat of sealant (C129) to upper wirestrike area BL9 to BL0.

(7) Secure all remaining retainers to structure.

(8) Trim adhesive squeeze-out with sharpened piece of plastic.

(9) Install free air temperature (FAT) gage if right windshield is being installed.

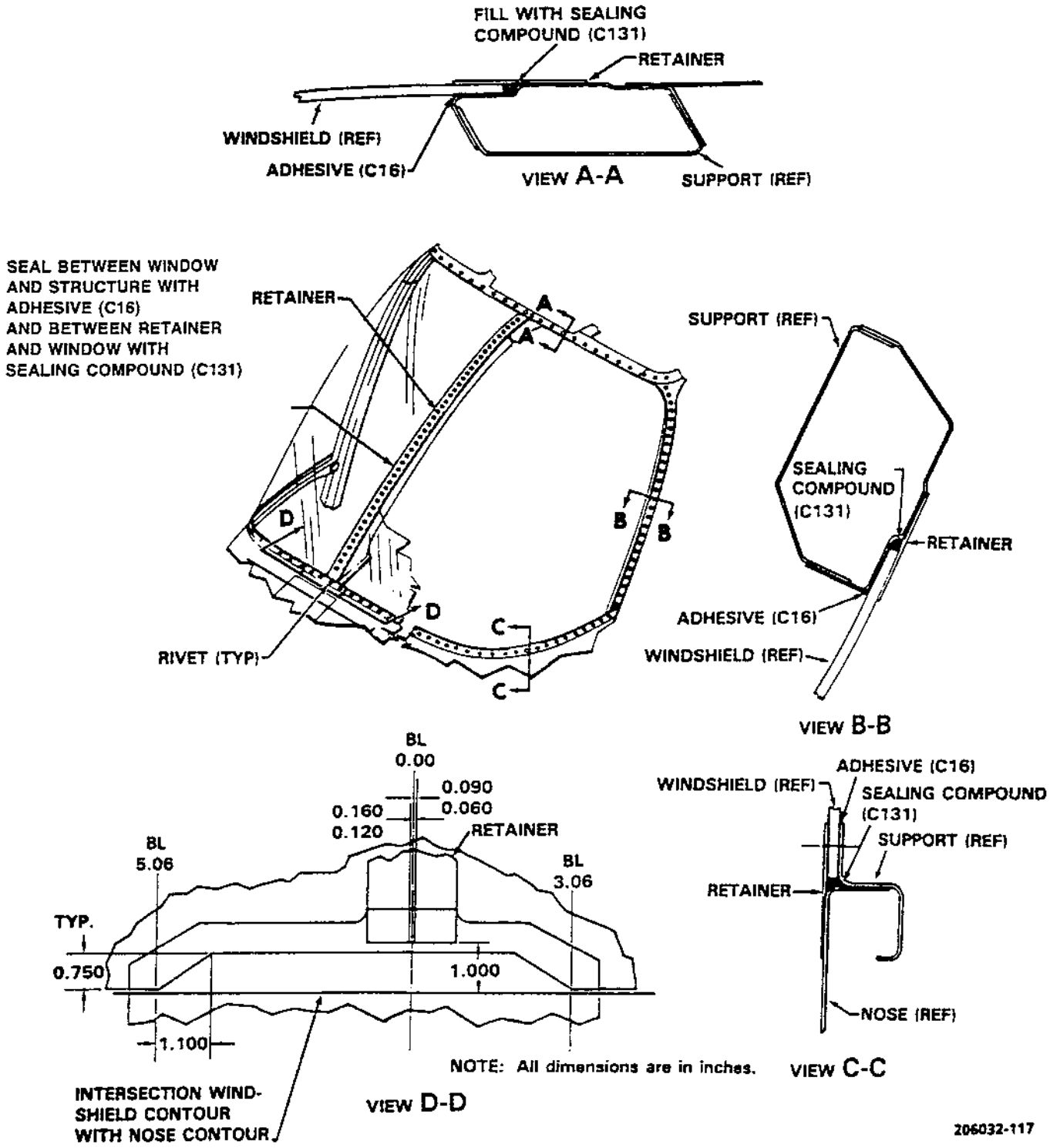

Figure 2-23. Windshield Replacement A C Round Glass

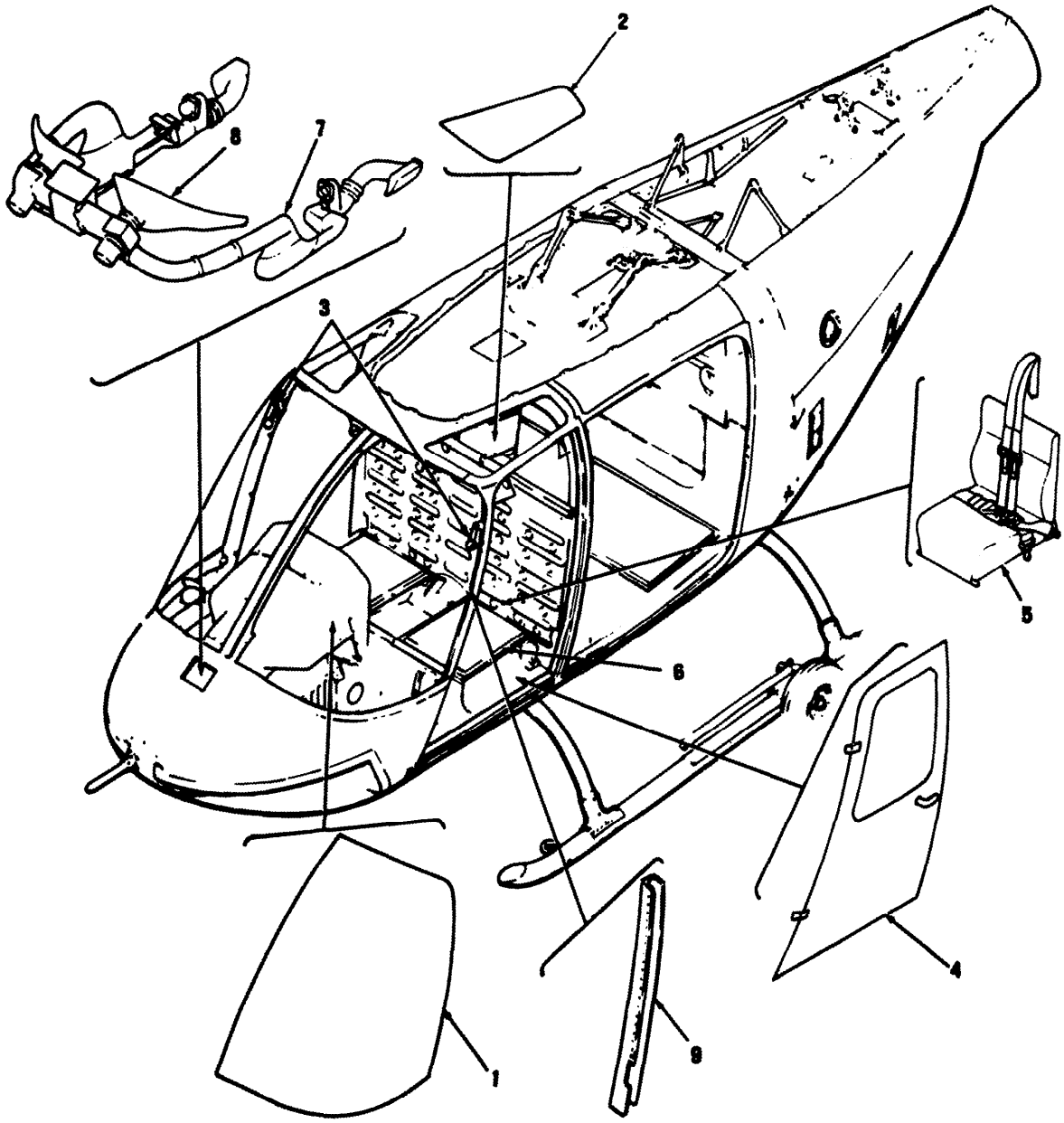

1. Windshield
2. Skylight Window
3. Door Jettison Mechanism
4. Door
5. Co Pilot Seat
6. Armor Panel
7. Defog Nozzle
8. Air Outlet Duct
9. Doubler

Figure 2-23.1. Door Frame/Windshield Frame Assy Repair (Sheet 1 of 4)

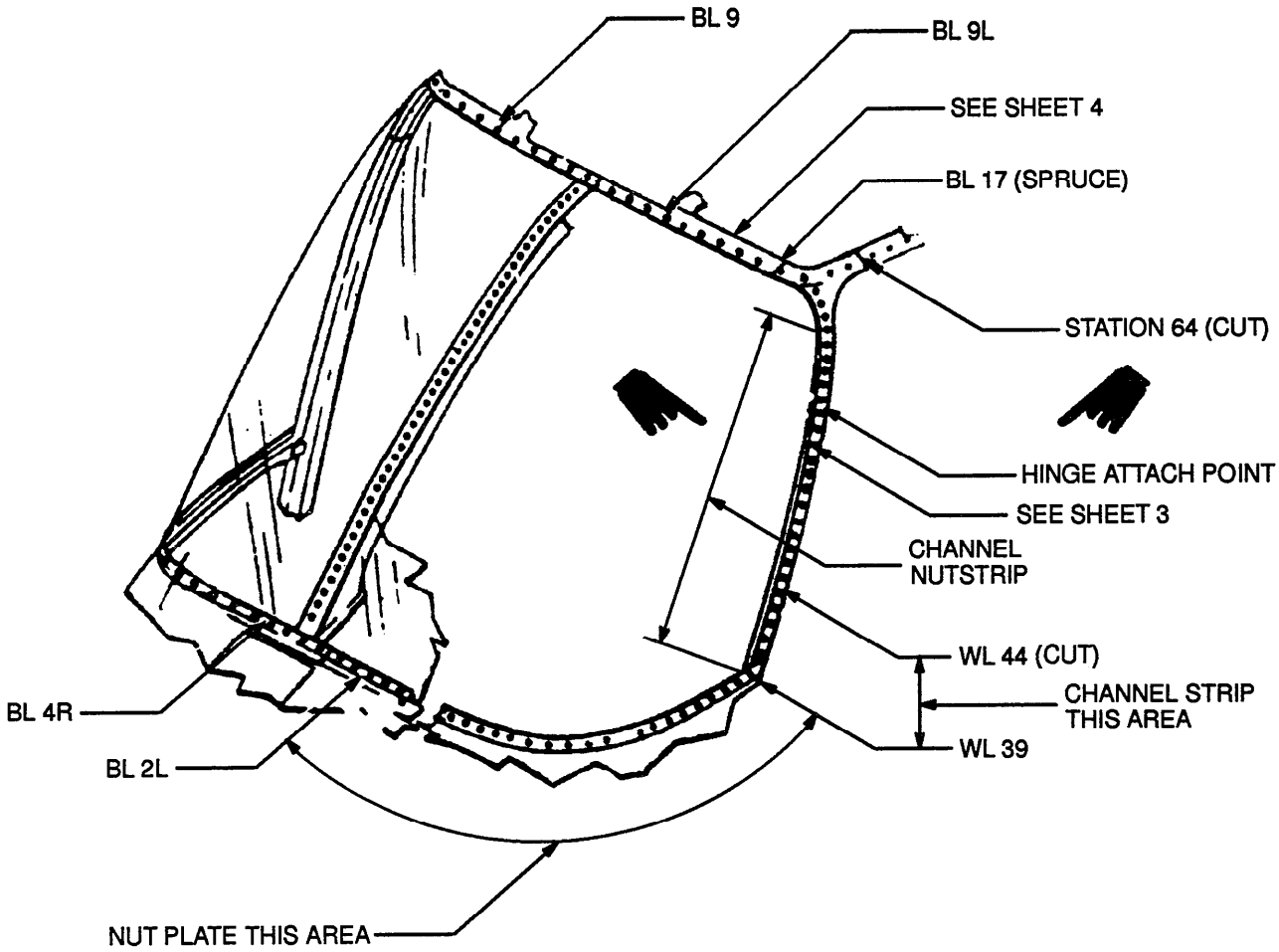

Figure 2-23.1. Door Frame/Windshield Frame Assy Repair (Sheet 2 of 4)

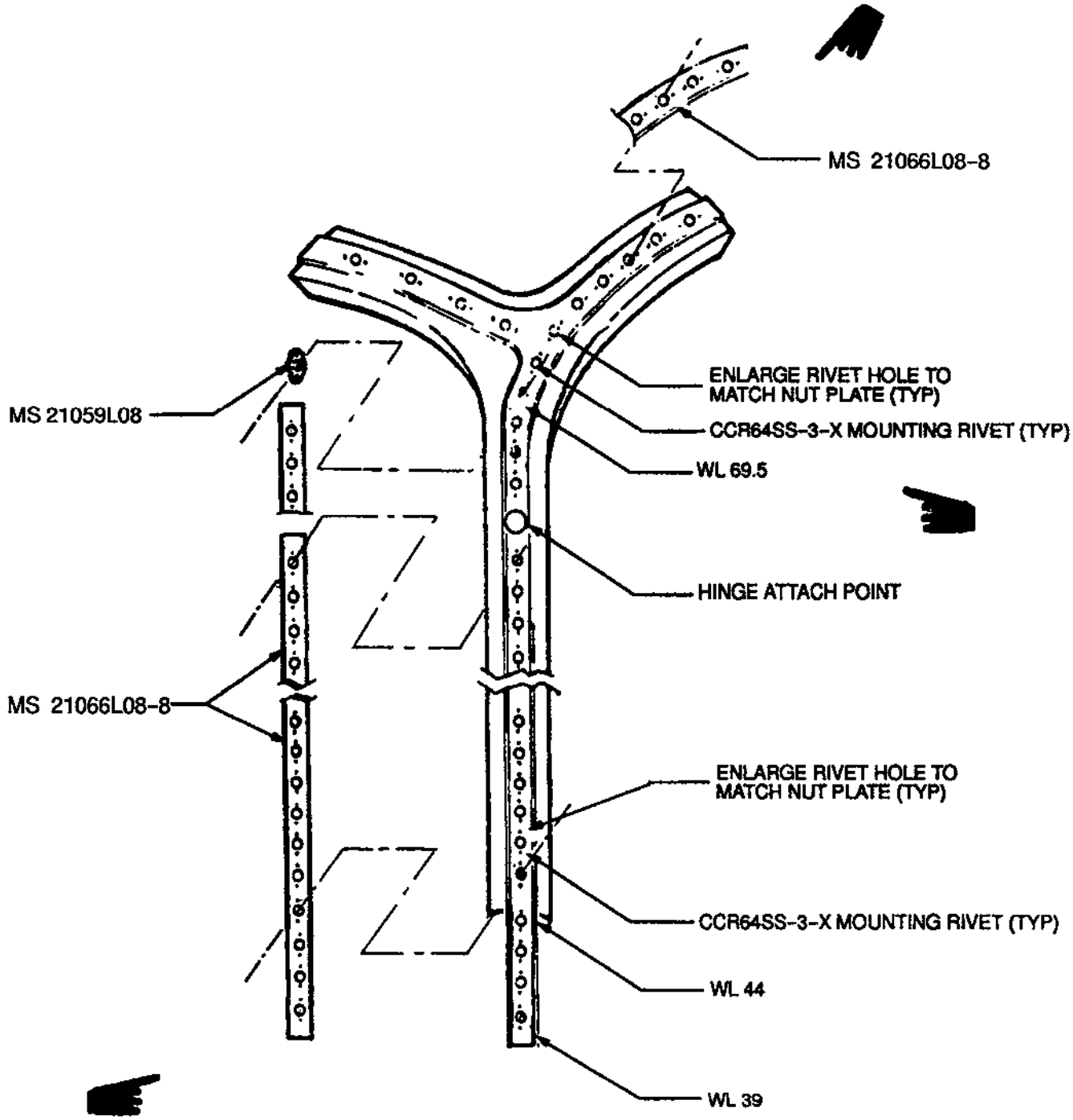

Figure 2-23.1. Door Frame/Windshield Frame Assy Repair (Sheet 3 of 4)

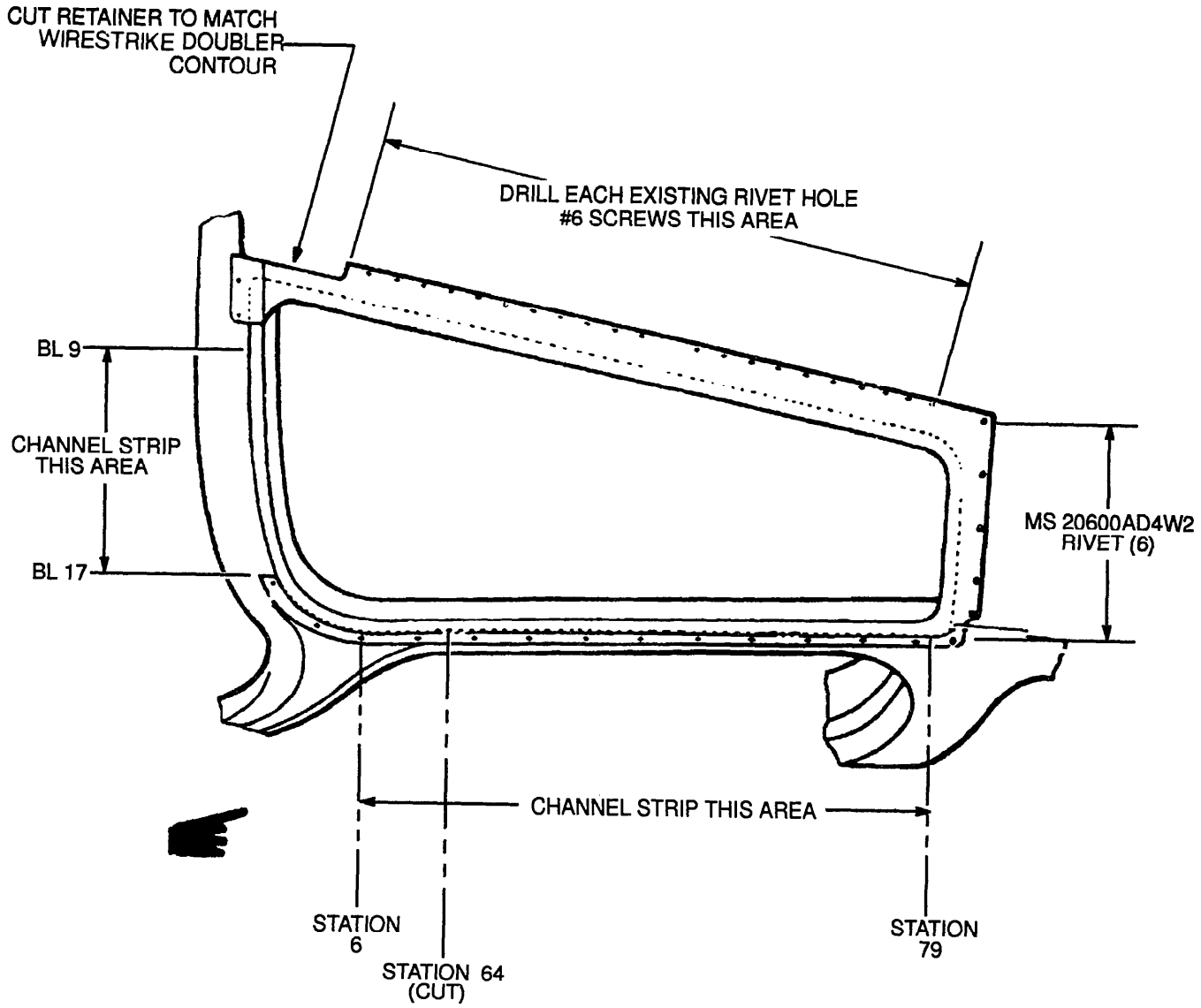

Figure 2-23.1. Door Frame/Windshield Frame Assy Repair (Sheet 4 of 4)

b. Windshields (figure 2-22). C Flat Glass.

NOTE

Windshield mounting area under permanently installed plate (5) must be thoroughly cleaned before installing new windshield.

(1) Place windshield in frame under plate (5). Mark and remove for trimming if necessary.

(2) Trim windshield so that it does not ride on radius of supports.

(3) Temporarily install windshield. Tape in place with masking tape (C140) or equivalent.

(4) Temporarily install retainer (2) over windshield and under plate (5).

(5) Temporarily install remaining retainers and cap (11).

(6) Carefully check alignment of all retainers and cap (11). Ensure that retainers (2) are aligned with plate (5).

(7) Using holes in plate, retainers, and cap as a guide, drill rivet holes through windshield using No. 30 drill with special point (figure 2-24).

(8) Remove cap, retainers, and windshield.

(9) Enlarge holes in windshield using No. 27 drill with special point (figure 2-24).

(10) Apply a thin, even coat of sealing compound (C131) to mating surfaces on window supports, retainers, and plate (5, figure 2-22).

(11) Position windshield. Fill voids between windshield and frame with sealing compound (C131).

(12) Install windshield, retainers, and cap with rivets.

(13) Trim sealing compound squeeze-out with sharpened piece of plastic.

(14) Install free air temperature gage (4) if installing right forward windshield.

c. Windows (figures 2-21, 2-22, and 2-25).

(1) Trim window to assure proper fit. Refer to TM 1-1500-204-23.

(2) Apply a thin even coat of sealing compound (C131) to mating surface of window support.

(3) Position window on supports. Fill all void areas between edge of window and supports with sealing compound (C131).

NOTE

When installing new roof windows, do not install rivets through retainer and window. Install only the rivets attaching the retainer to the structure.

NOTE

To prevent cracking of new plexiglass windows, enlarge the rivet holes in the window to the next oversize as compared to the rivet holes in the metal retainers.

NOTE

Lower window (chin bubble) retaining strips, left and right, may be reinstalled using bulbed cherrylock rivets, or Cherry Max rivets. Nose cap center skin panel is attached with solid rivets which are inaccessible for bucking and may be replaced with the same type rivets.

(4) Trim sealing compound squeeze-out with sharpened piece of plastic.

2-138. CARGO PLATFORM

CAUTION

To prevent damage to the floor of the passenger compartment, no cargo will be placed on the floor of the helicopter. The cargo platform will be installed whenever cargo is to be carried.

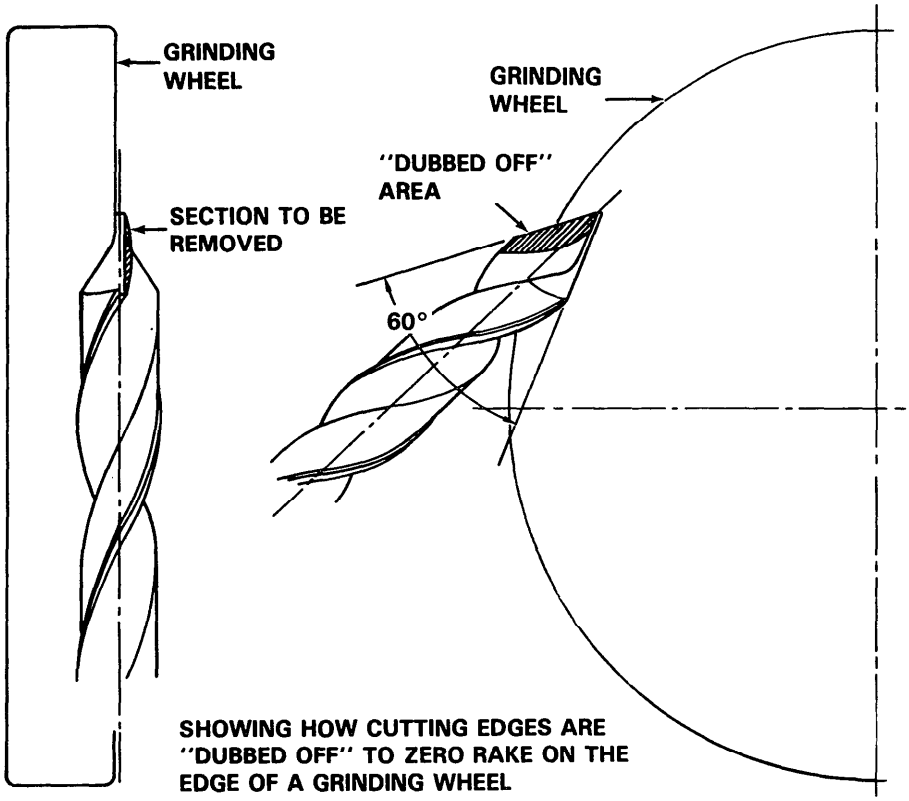

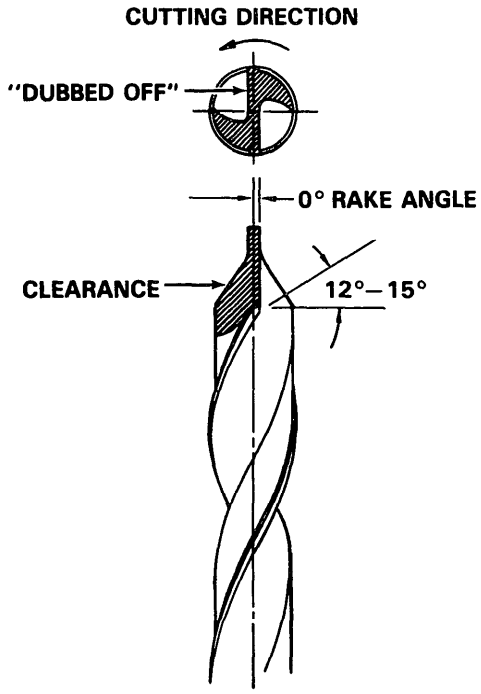

Figure 2-24. Special Drill Point for Drilling Plexiglas

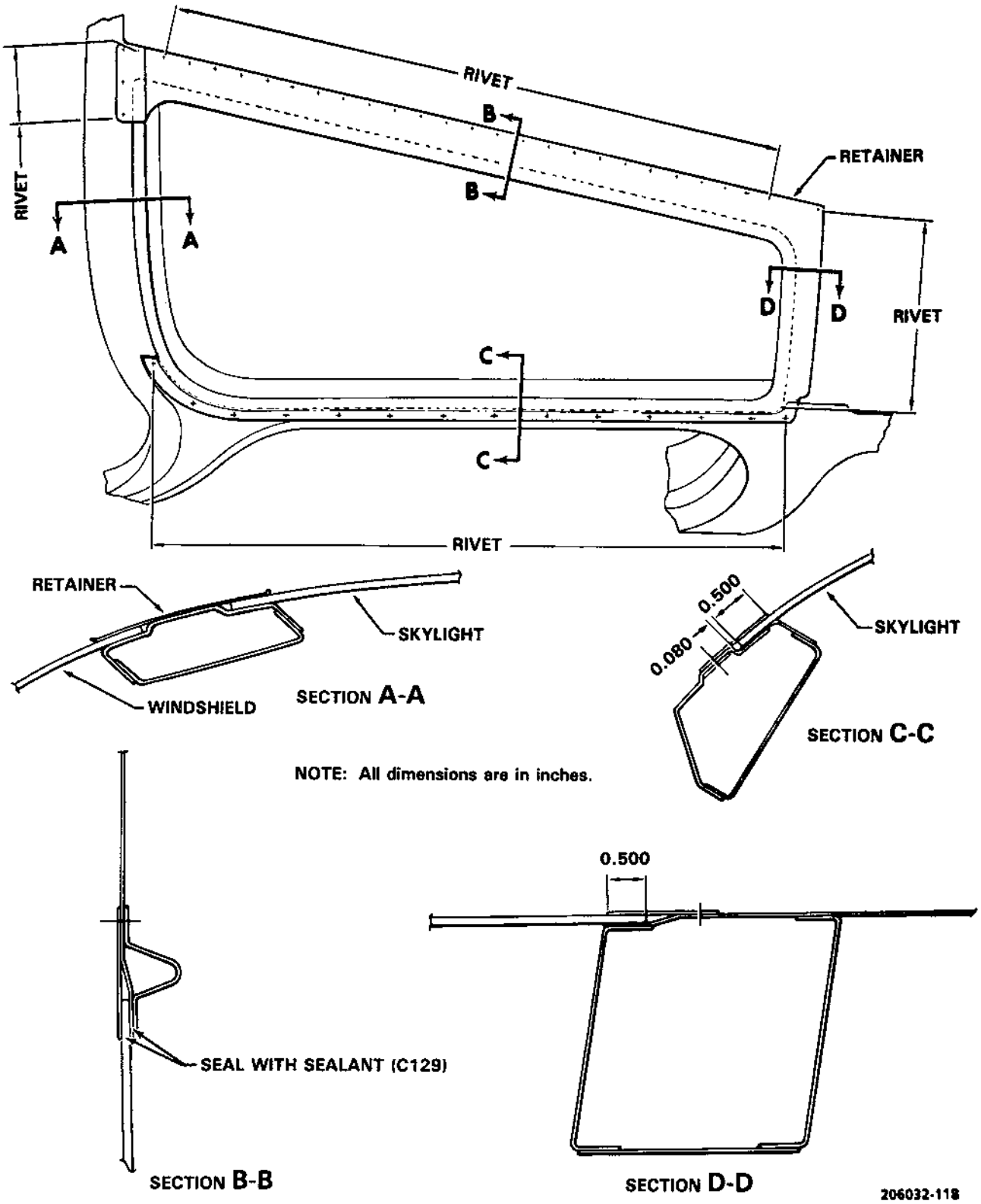

Figure 2-25. Window Replacement A C Round Glass

2-139. DESCRIPTION — CARGO PLATFORM (FIGURE 2-26). A platform may be installed in the passenger area for cargo handling. The platform is a two piece construction of plywood sheeting. Provisions are made for mounting to existing fuselage hardware.

2-140. REMOVAL — CARGO PLATFORM.

a. Disengage four quick-disconnect pins from fittings on each section of platform and carefully remove platform from passenger section.

b. Install passenger seat cushions. Refer to paragraph 2-95.

c. Install passenger seat safety belts. Refer to paragraph 2-102.

2-141. INSTALLATION — CARGO PLATFORM.

a. Remove passenger seat cushions. Refer to paragraph 2-93.

b. Remove passenger seat belts. Refer to paragraph 2-101.

c. Position platform in passenger compartment with notched end forward and butted against the canted center post.

d. Align aft platform fittings with existing seat belt fittings and attach each section with two quick-disconnect pins.

e. Align forward platform fittings with install provisions on canted center post and door post and attach each section with two quick-disconnect pins.

2-142. AUXILIARY EQUIPMENT.

2-143. DESCRIPTION — AUXILIARY EQUIPMENT. The locations of auxiliary equipment within the cabin are shown in figure 2-27.

2-144. MAP AND DATA CASE.

2-145. DESCRIPTION — MAP AND DATA CASE. The map and data case is mounted on the aft side of the canted center post. The case has an ash tray attached to one side.

2-146. REMOVAL — MAP AND DATA CASE. Remove four screws (12, figure 2-27) and washers (11). Remove case (16) from canted center post.

2-147. INSTALLATION — MAP AND DATA CASE. Position case (16) on mount and install four screws (12) and washers (11).

2-148. ASH TRAY.

2-149. REMOVAL — ASH TRAY. Remove two screws (17, figure 2-27), washers (14), and nuts (13) attaching ash tray (15) to map case.

2-150. INSTALLATION — ASH TRAY. Position ash tray on map case and install with two screws (17), washers (14), and nuts (13).

2-151. POCKET ASSEMBLY.

2-152. DESCRIPTION — POCKET ASSEMBLY. The pocket assembly is mounted on the forward side of the canted center post between the pilot and copilot seat.

2-153. INSPECTION — POCKET ASSEMBLY. Check for fraying and loose stitching, tears in fabric and security of mounting.

2-154. REMOVAL — POCKET ASSEMBLY. Remove four screws attaching pocket assembly (8, figure 2-27) to canted center post.

2-155. REPAIR — POCKET ASSEMBLY. Refer to TM 1-1500-204-23 for repairs.

2-156. INSTALLATION — POCKET ASSEMBLY. Position pocket assembly and install screws into nutplates on center post.

2-157. DUST AND MOISTURE BOOTS.

2-158. DESCRIPTION — DUST AND MOISTURE BOOTS. The flexible boots (7 and 9, figure 2-27) are attached to cockpit floor and serve to protect the pilots and copilots collective and cyclic control stick installation from dirt, dust, and/or other foreign matter.

2-159. INSPECTION — DUST AND MOISTURE BOOTS. Inspect boots (7 and 9, figure 2-27) for loose or missing screws, fraying, tears, deterioration, and/or other damage.

2-160. REMOVAL — DUST AND MOISTURE BOOT. Refer to paragraph 11-44.

2-161. REPAIR — DUST AND MOISTURE BOOT. Repairs not permitted. Replace boot.

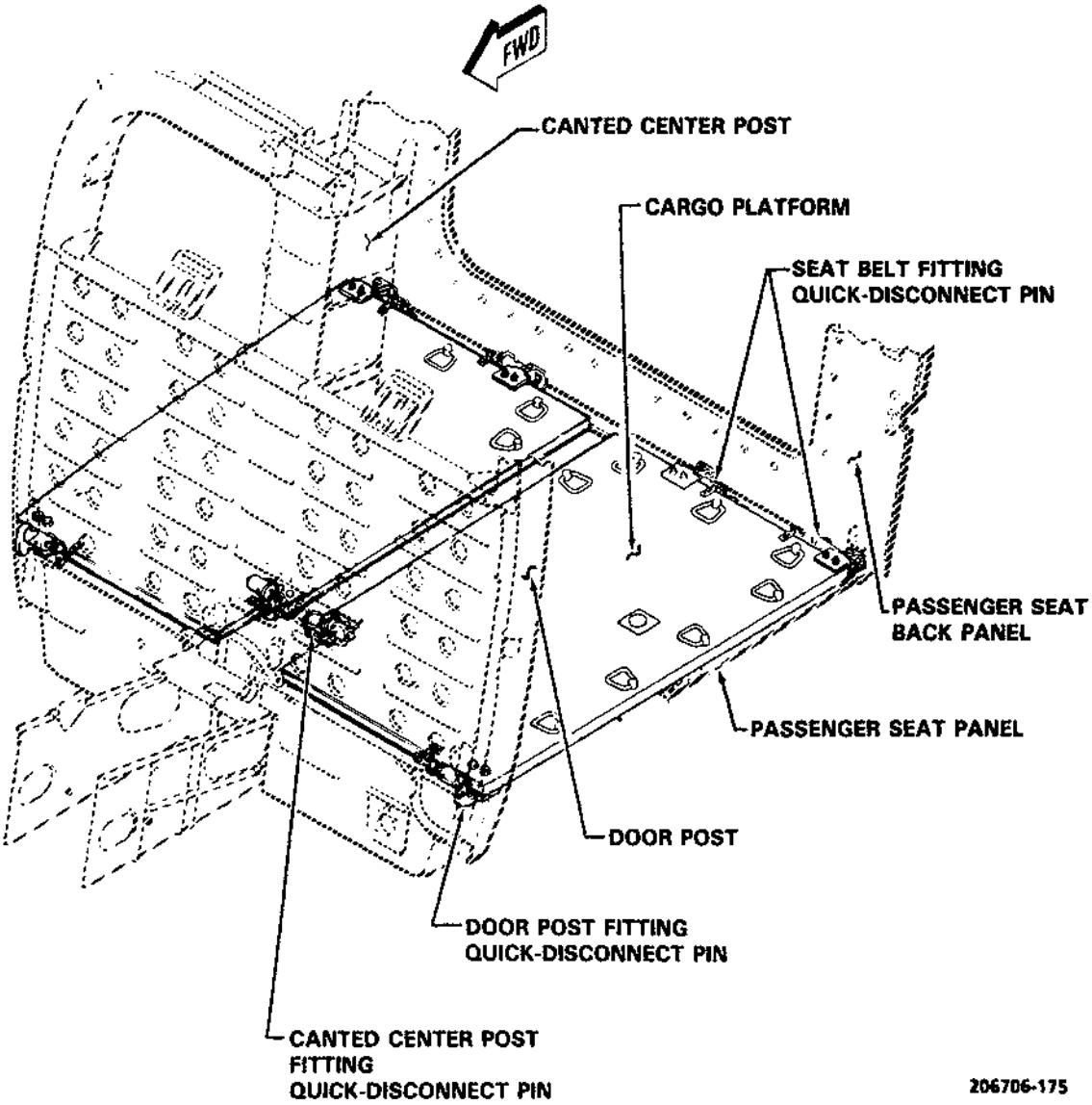

Figure 2-26. Cargo Platform Installation

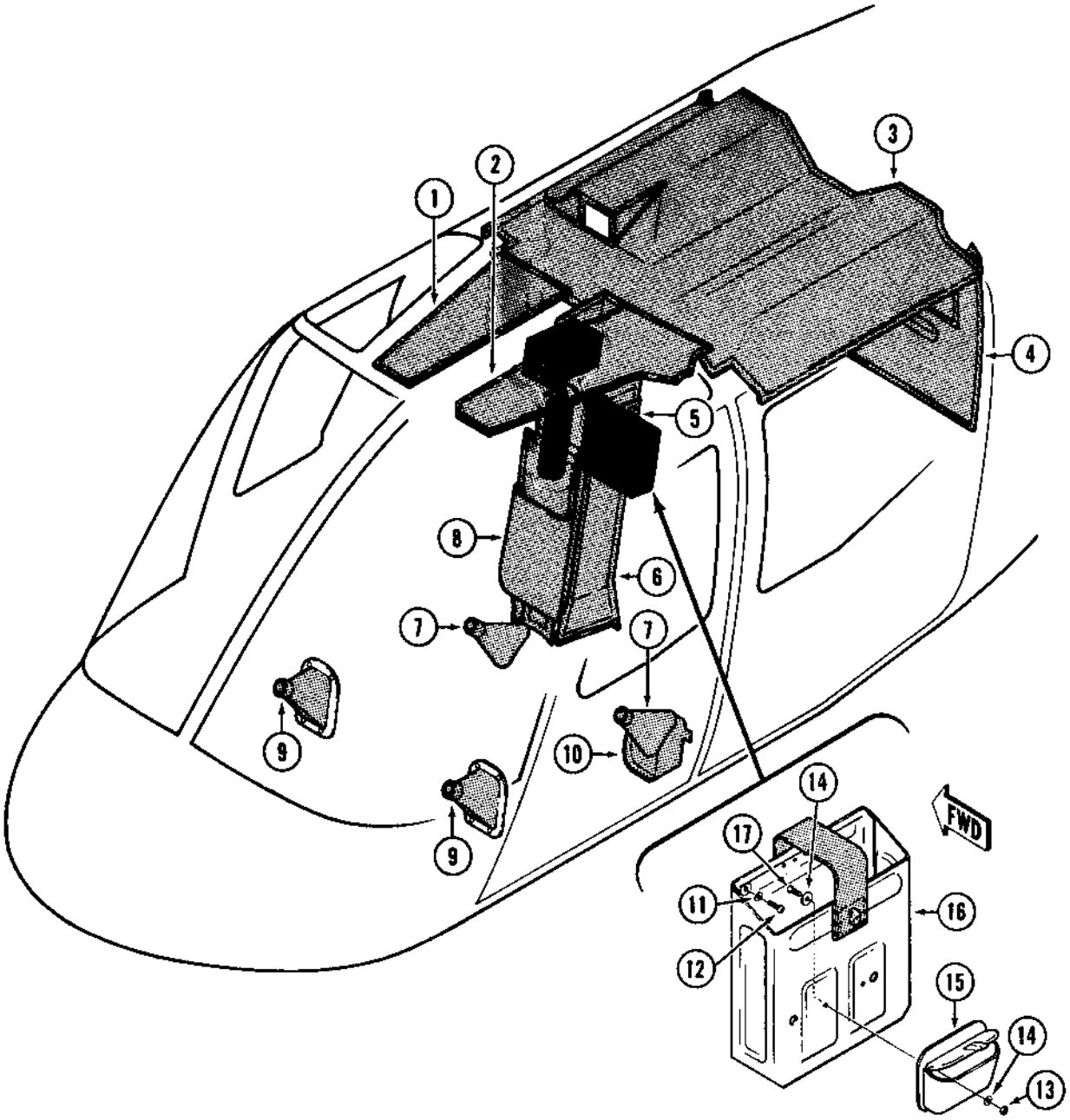

1. Blanket Assembly
2. Blanket Assembly
3. Blanket Assembly
4. Blanket Assembly
5. Blanket Assembly
6. Blanket Assembly
7. Dust and Moisture Boot
8. Pocket Assembly
9. Dust and Moisture Boot
10. Cover Assembly
11. Washer
12. Screw
13. Nut
14. Washer
15. Ash Tray
16. Map Case Assembly
17. Screw

Figure 2-27. Auxiliary Equipment

2-162. INSTALLATION — DUST AND MOISTURE BOOT. Refer to paragraph 11-47.

2-163. SOUNDPROOFING BLANKETS.

2-164. DESCRIPTION — SOUNDPROOFING BLANKETS (FIGURE 2-27). The cabin interior is covered with blankets of soundproofing material to reduce noise level for crew and passengers during operation. Blankets are attached to structure by hook-and-pile and snap-typefasteners. Blankets may be removed for access to equipment for maintenance purposes.

2-165. INSPECTION — SOUNDPROOFING BLANKETS. Inspect soundproofing blankets for missing snaps, loosefastening tape, tears in cloth, and improper fit, or deterioration.

2-166. REMOVAL — SOUNDPROOFING BLANKETS. Remove blanket section and/or control cover by detaching snaps and/orfasteners as applicable.

2-167. CLEANING — SOUNDPROOFING BLANKETS.

CAUTION

Do not submerge in water.

a. Remove dirt, dust, oil, and grease by wiping with cloth dampened with denatured alcohol (C59).

b. Allow to air dry for three to five minutes and repeat step a. as necessary until stains are removed.

2-168. REPAIR OR REPLACEMENT — SOUNDPROOFING BLANKETS.

a. Repair cuts or tears.

(1) Cut a patch from fiberglass cloth (C46) large enough to overlap all sides of the tear or cut.

(2) Apply a thin, even coating of adhesive (C46) to back of patch. Allow to dry until tacky.

(3) Center patch over tear or cut with adhesive side against blanket.

(4) Apply firm, even pressure to patch in such a manner that it will adhere securely to blanket without wrinkles or irregularities.

b. Replace missing or damaged buttons and sockets.

(1) Cut a patch from cloth (C46) large enough to overlap all sides of the damaged area around button or socket.

(2) Center patch over damaged area and sew securely in place with thread (C148).

(3) Install new button or socket, using press and dies.

2-169. INSTALLATION — SOUNDPROOFING BLANKETS. Install blanket section and/or cover by securing fasteners and/or tape in proper areas.

2-170. FUSELAGE ASSEMBLY (HONEYCOMB PANELS AND SHELL ASSEMBLY).

2-171. DESCRIPTION — HONEYCOMB PANELS AND SHELL ASSEMBLY. Honeycomb panels constructed of 5052 aluminum alloy core with glass cloth and/or aluminum alloy facing are utilized throughout the helicopter. The transmission and engine fairings, cabin nose, and lower shell are the primary locations of fiberglass faced panels. Aluminum alloy faced panels are utilized in the cabin roof, lower shell, seat supports, vertical fin, and floorings. Refer to figures 2-28 through 2-39 for panel locations and repair limits.

2-172. INSPECTION — HONEYCOMB PANELS AND SHELL ASSEMBLY.

CAUTION

When internal corrosion or contamination (fuel, oil, water, etc.) is discovered, affected skins or core must be completely cut out. Failure to comply with this requirement will result in failure of the repair and/or progressive core degeneration.

a. Inspect honeycomb panels for delamination, punctures, dents, cracks, voids, corrosion, or contamination and other damage. If damage to honeycomb panel is suspected, refer to TM 1-1520-254-23, Technical Manual Aviation Unit Maintenance (AVUM) and Aviation Intermediate Maintenance (AVIM) Manual Nondestructive Inspection Procedures for OH-58 Helicopter Series.

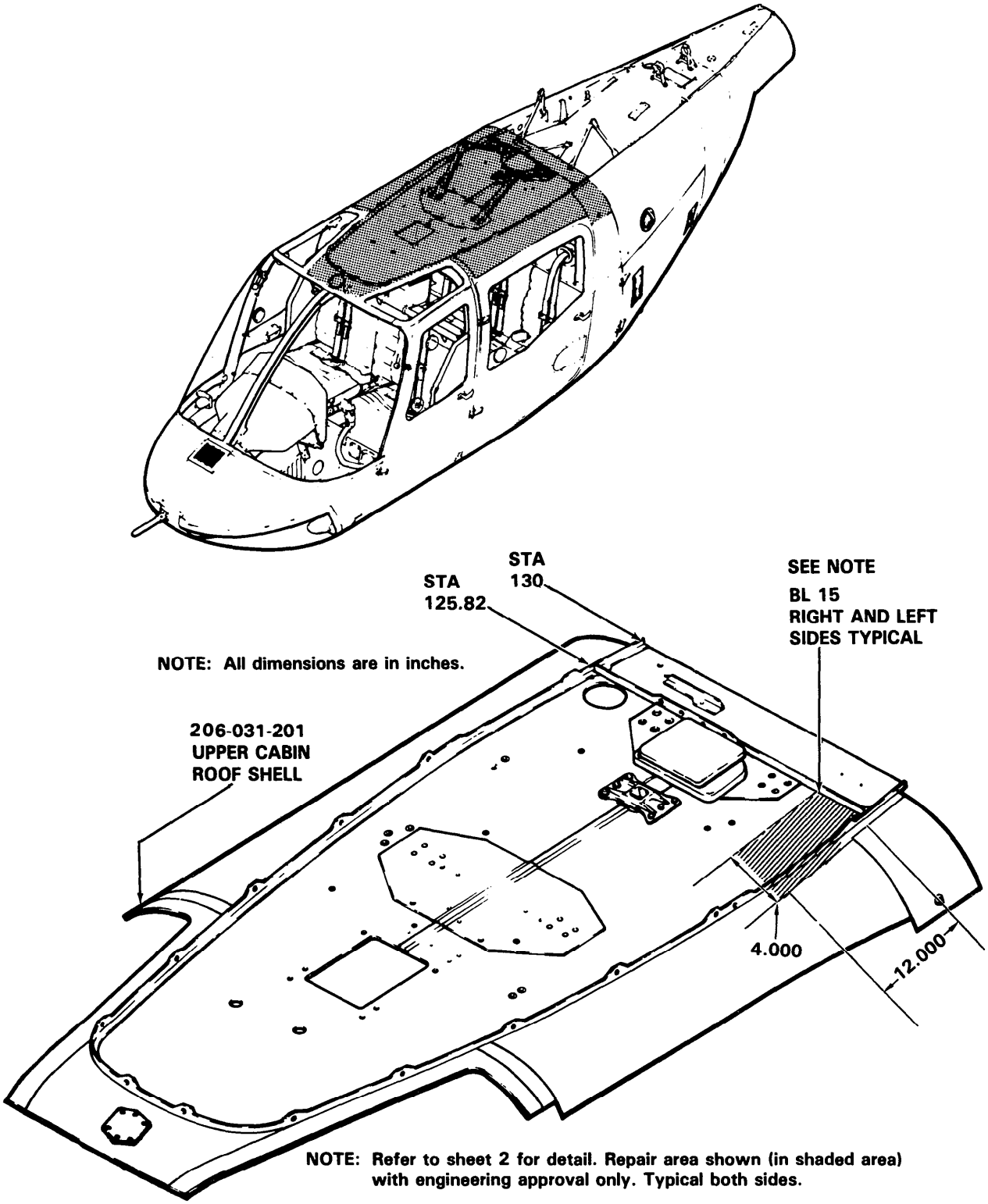

Figure 2-28. Honeycomb Panels — Upper Cabin Roof Repair (Sheet 1 of 2)

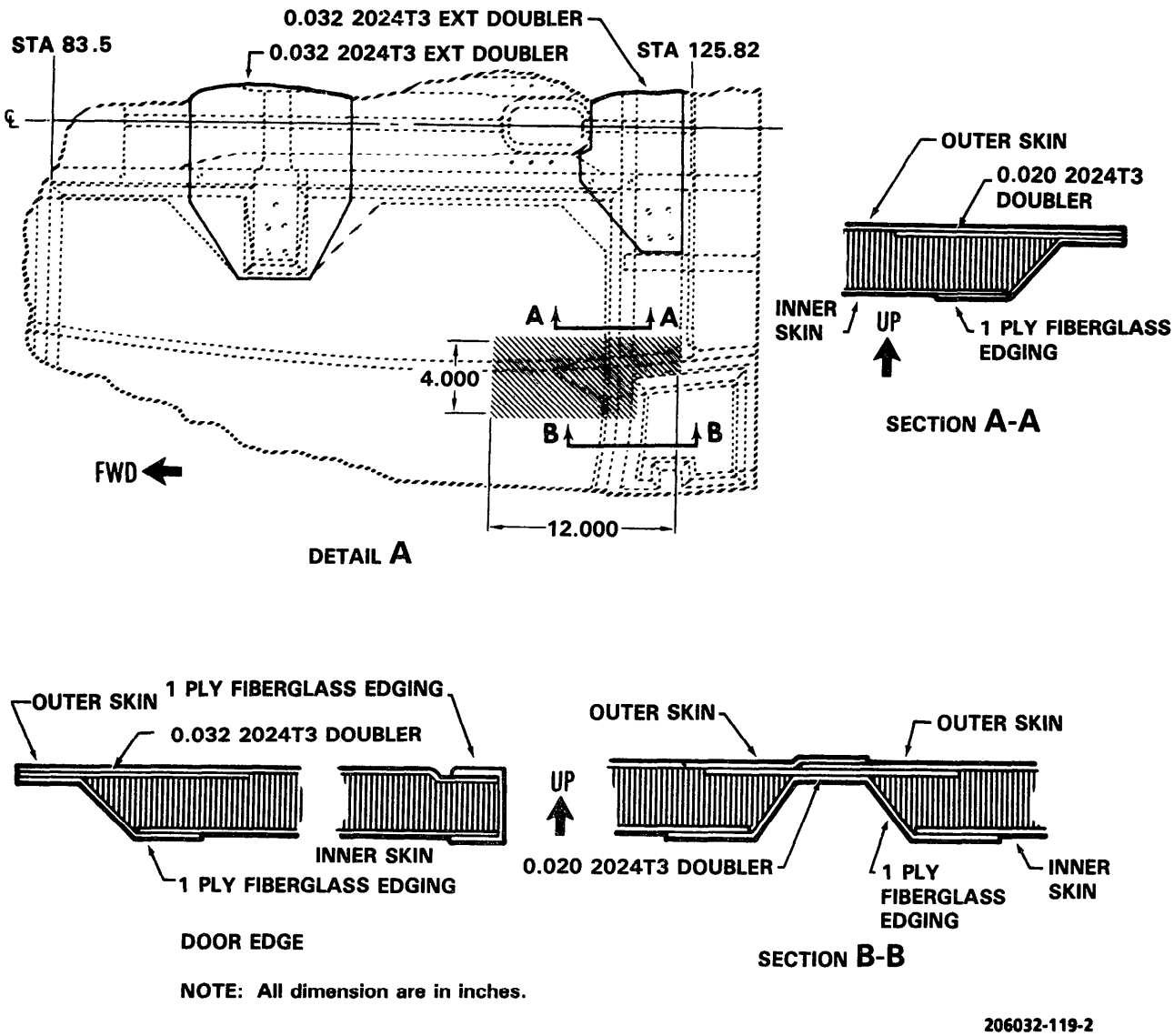

GENERAL CONSTRUCTION

OUTER SKIN	0.012 2024T3 SMOOTH
INNER SKIN	0.008 2024T3 SMOOTH
CORE	0.500 THICK ALUMINUM HONEYCOMB
EDGING	FIBERGLASS EDGING 1 PLY

REPAIR LIMITS

STD EXCEPT:

a) No major repairs in hatched area without AMCOM engineering approval

b) Note critical mounting surfaces.

Figure 2-28. Honeycomb Panels — Upper Cabin Roof Repair (Sheet 2 of 2)

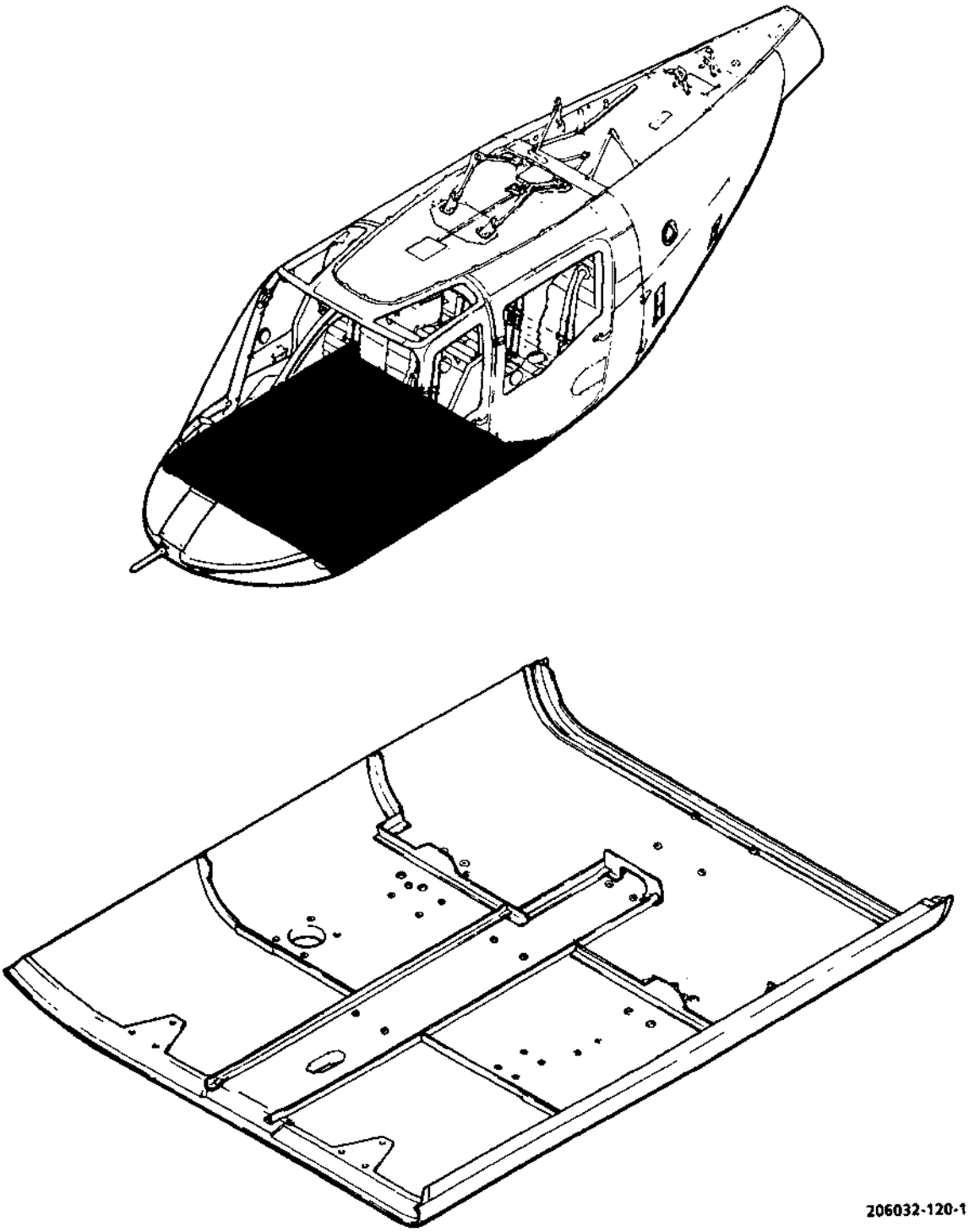

Figure 2-29. Honeycomb Panel — Forward Lower Cabin Shell Repair (Sheet 1 of 5)

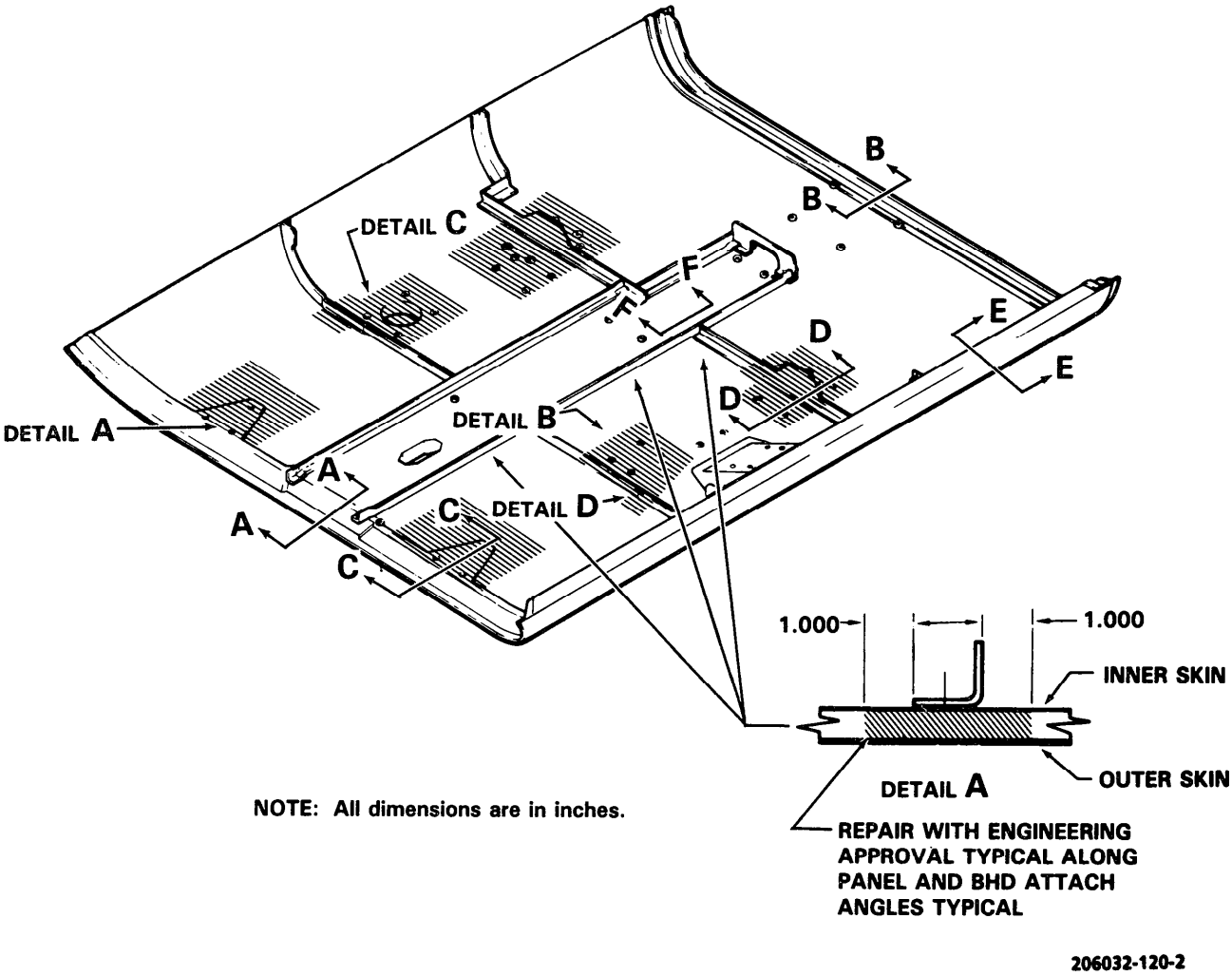

FORWARD HALF

GENERAL CONSTRUCTION

INNER SKIN 0.012 x 2024T3 SHEFFIELD OR 5WL

OUTER SKIN 0.012 X 204T3 SMOOTH

CORE 1.000 THICK ALUMINUM HONEYCOMB

DAMAGE LIMITS:

STD EXCEPT:

a) No major repairs in hatched area without AMCOM engineering approval

b) Engineering approval required for repairs in typical detail A

c) Note critical mounting surfaces above and on following pages

Figure 2-29. Honeycomb Panel — Forward Lower Cabin Shell Repair (Sheet 2 of 5)

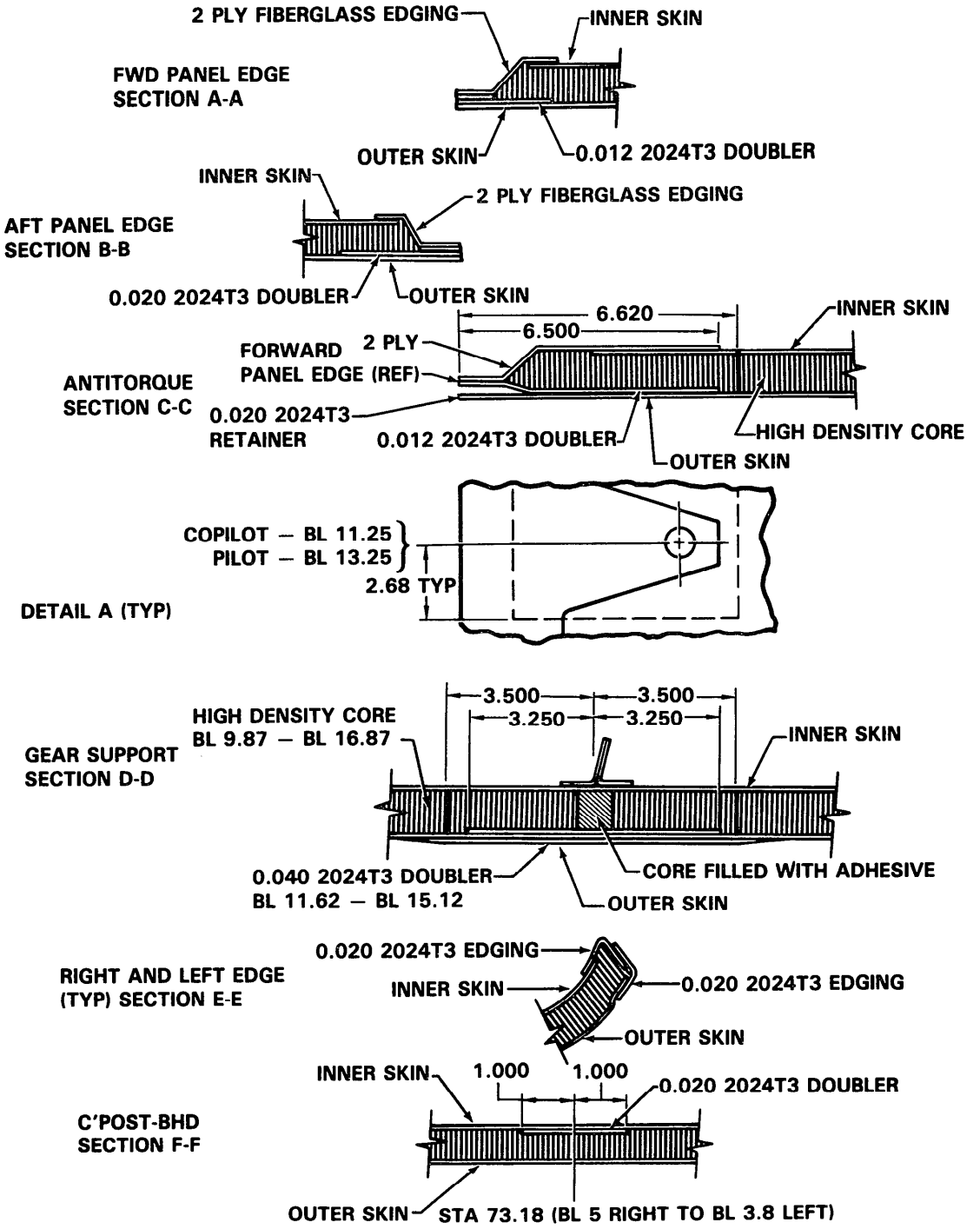

NOTE: All dimensions are in inches.

206032-120-3

Figure 2-29. Honeycomb Panel — Forward Lower Cabin Shell Repair (Sheet 3 of 5)

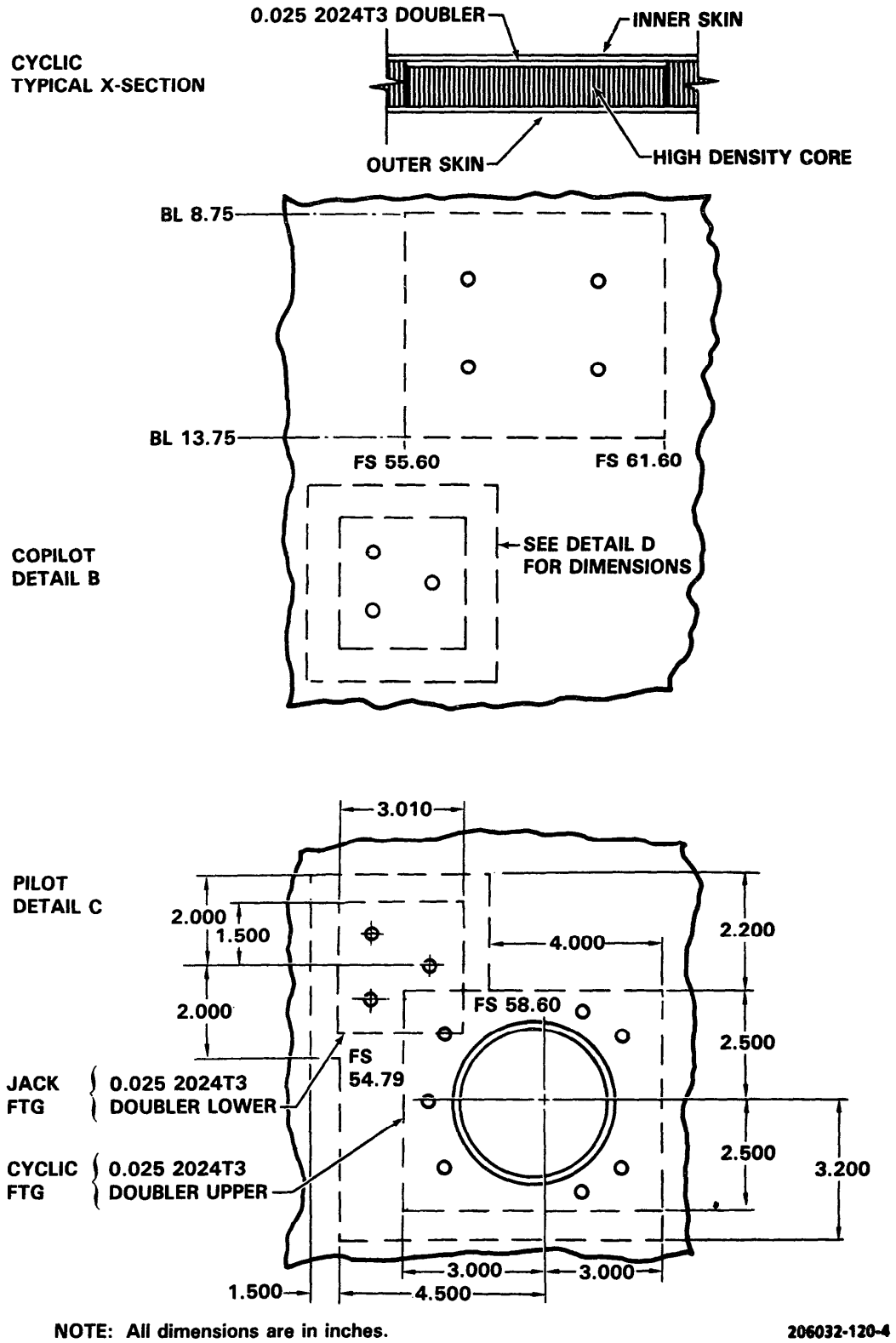

NOTE: All dimensions are in inches.

206032-120-4

Figure 2-29. Honeycomb Panel — Forward Lower Cabin Shell Repair (Sheet 4 of 5)

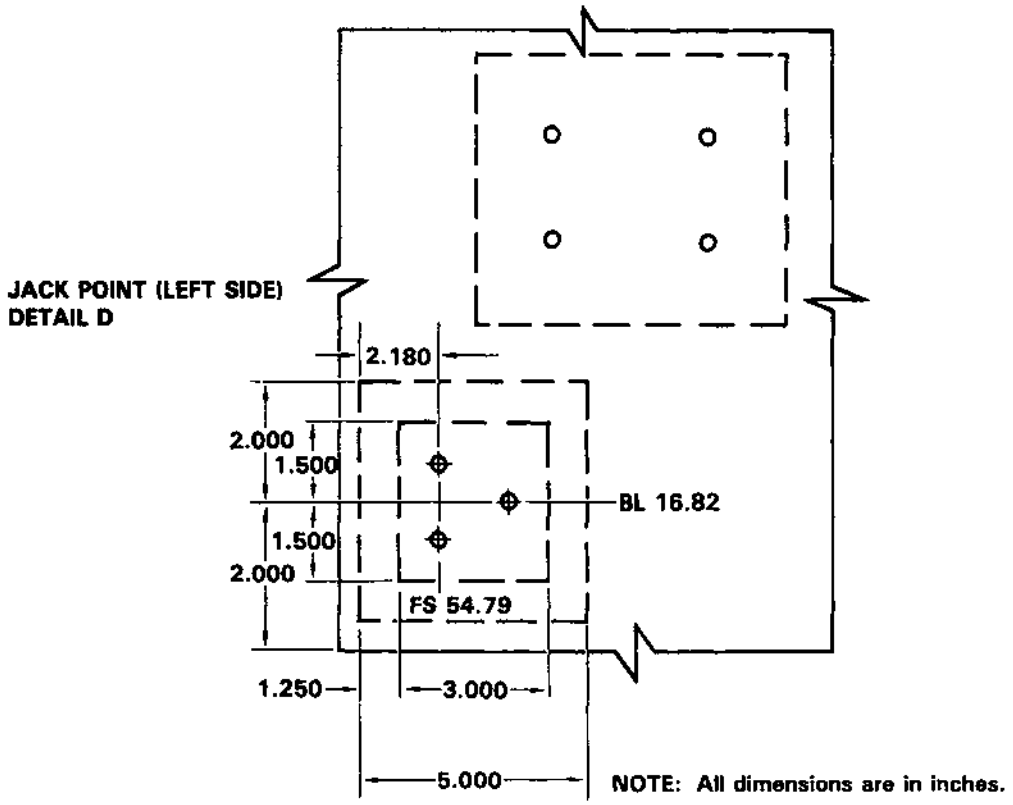

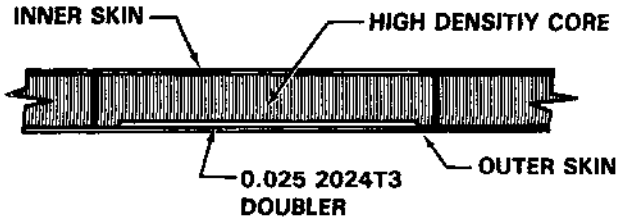

FORCE GRADIENT MOUNTING (MAG BRAKE)-NOT SHOWN ON SKETCH

RIGHT - Four inserts to match magnetic brake mount one located at BL 13.14, FS 68.06

LEFT - Four inserts to match magnetic brake mount one located at BL 19.09, FS 61.63

206032-120-5

Figure 2-29. Honeycomb Panel — Forward Lower Cabin Shell Repair (Sheet 5 of 5)

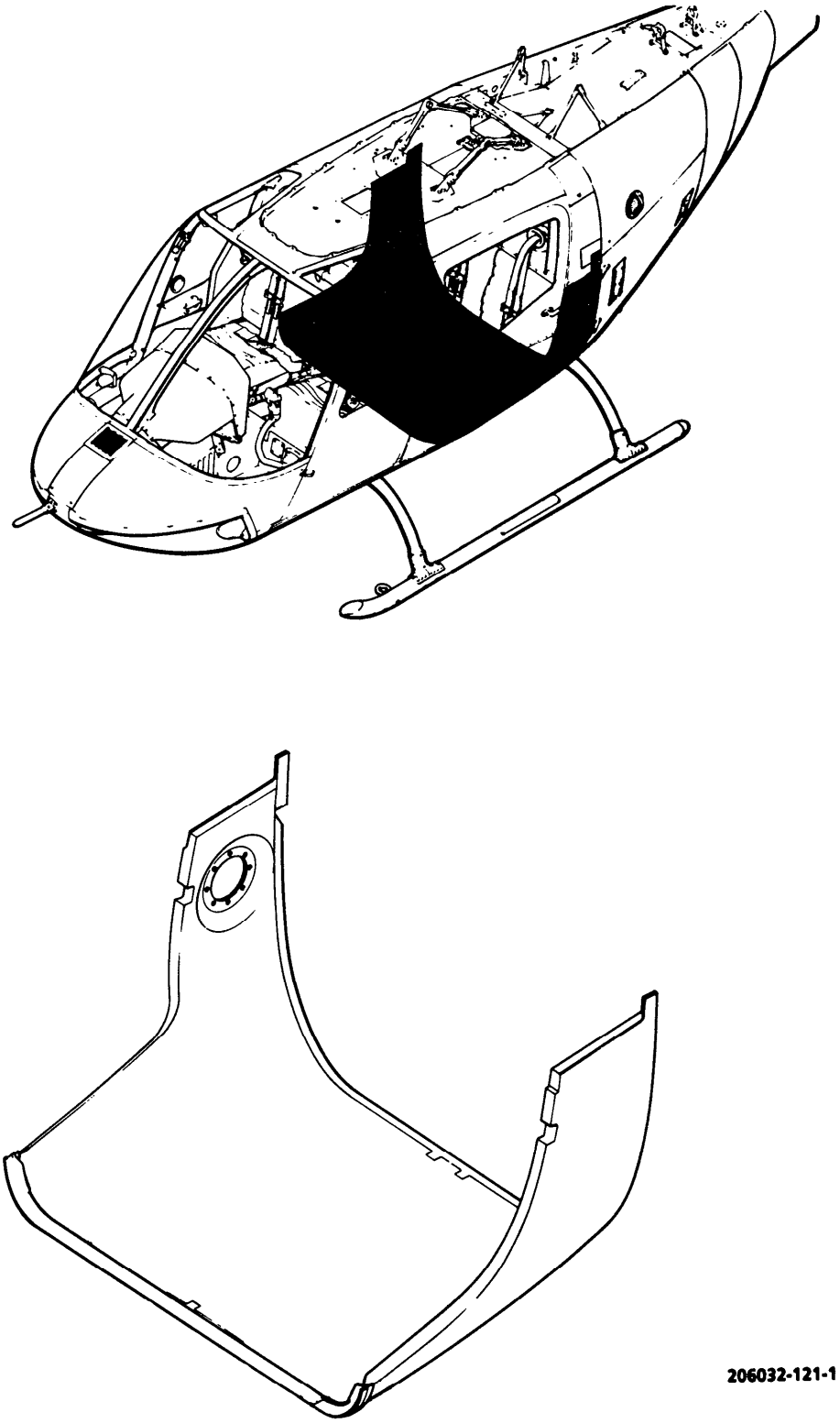

Figure 2-30. Honeycomb Panel — Aft Lower Cabin Shell Repair (Sheet 1 of 4)

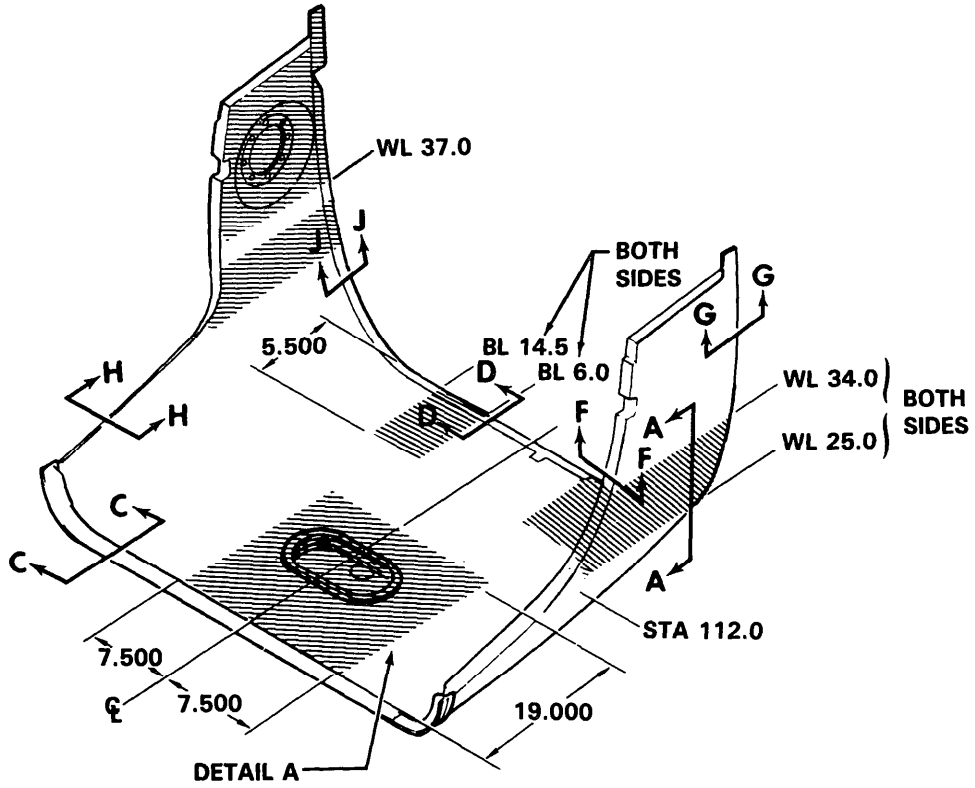

NOTE: All dimensions are in inches.

206032-121-2

AFT HALF

GENERAL CONSTRUCTION:

OUTER SKIN	1 PLY FIBERGLASS
INNER SKIN	2 PLY FIBERGLASS
CORE	1.000 THICK ALUMINUM HONEYCOMB

DAMAGE LIMITS:

STD EXCEPT:

a) No major repairs in hatched area without AMCOM engineering approval

b) Note critical mounting surfaces above and on following pages

Figure 2-30. Honeycomb Panel — Aft Lower Cabin Shell Repair (Sheet 2 of 4)

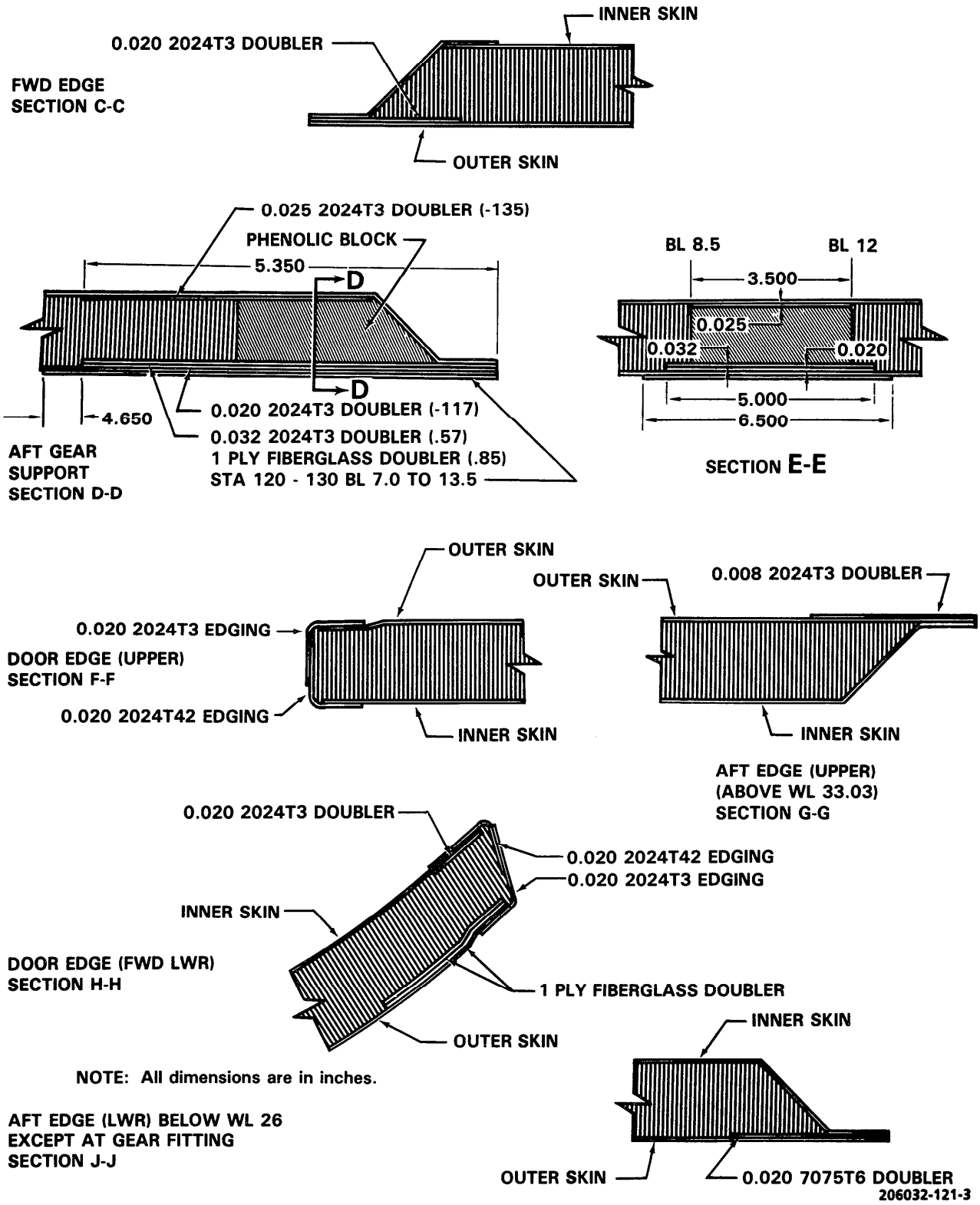

Figure 2-30. Honeycomb Panel — Aft Lower Cabin Shell Repair (Sheet 3 of 4)

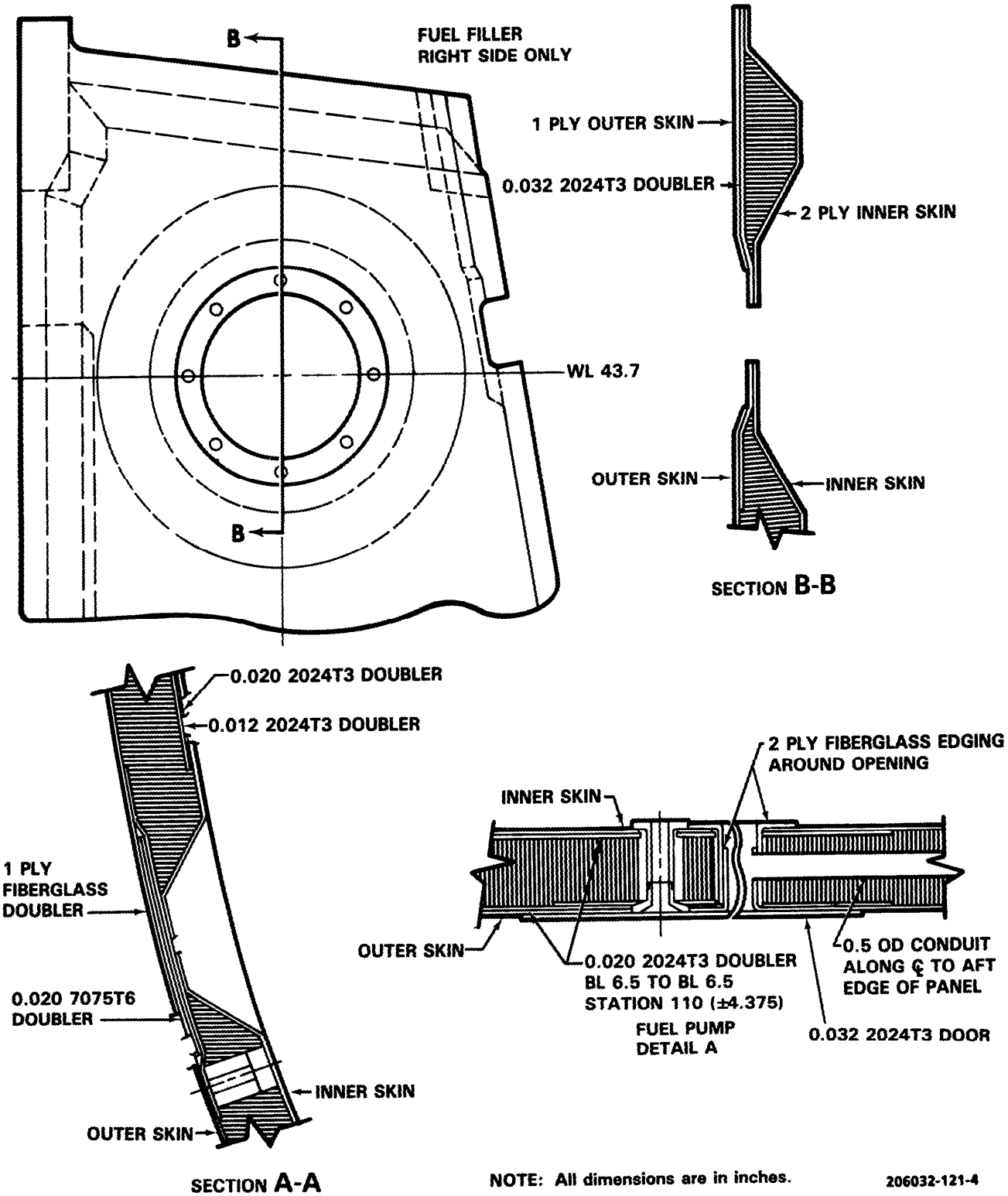

Figure 2-30. Honeycomb Panel — Aft Lower Cabin Shell Repair (Sheet 4 of 4)

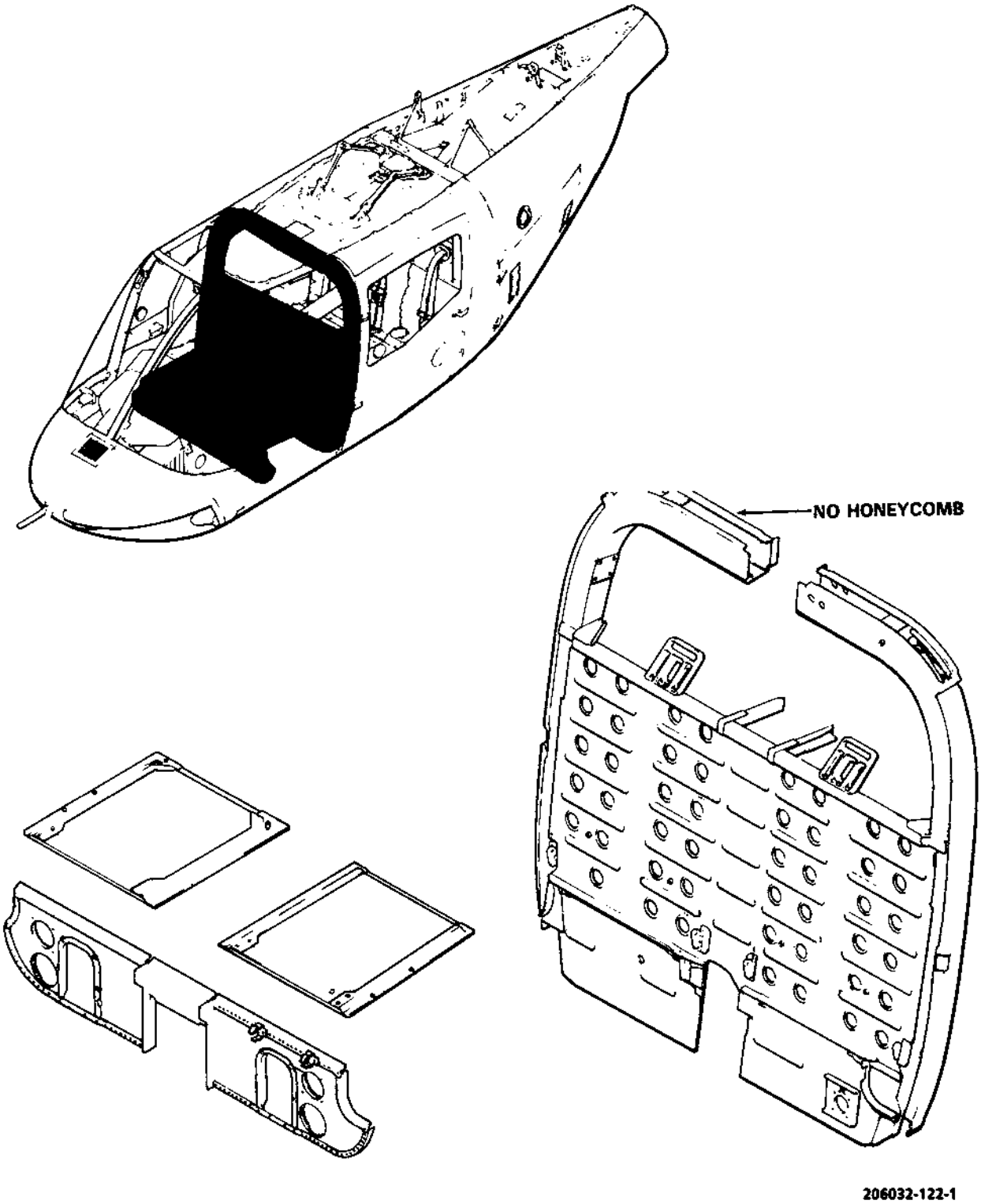

Figure 2-31. Honeycomb Panels – Crew Seat and Bulkhead Repair (Sheet 1 of 3)

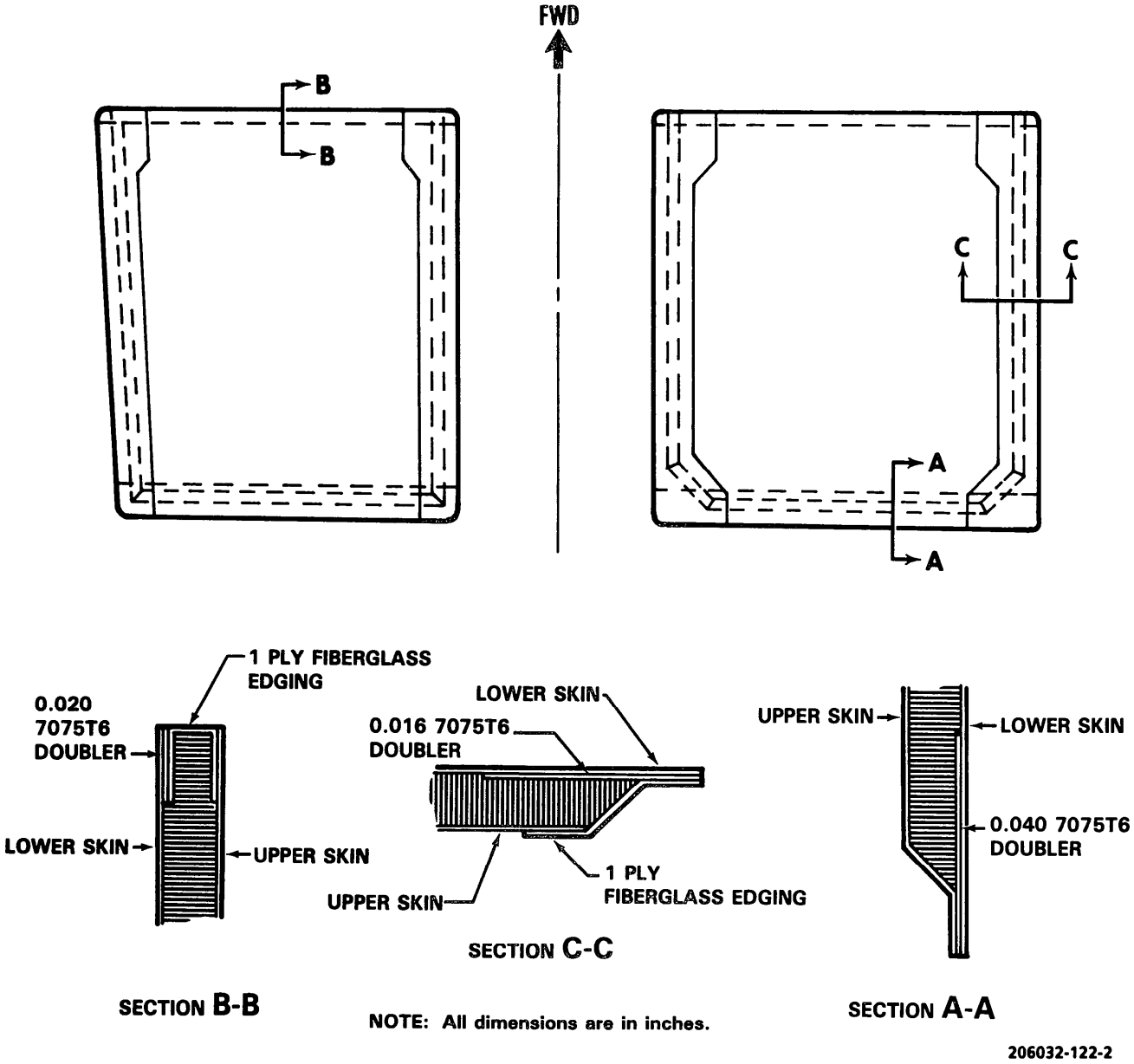

GENERAL CONSTRUCTION

UPPER SKIN	0.016 7075T6 SMOOTH
LOWER SKIN	0.016 7075T6 SMOOTH
CORE	0.500 THICK ALUMINUM HONEYCOMB
EDGING	FIBERGLASS EDGING 1 PLY 2 SIDES W/45 DEGREES FIBERGLASS EDGING 1 PLY FWD EDGE 90 DEGREES 0.016 UPPER SKIN AFT EDGE

REPAIR LIMITS

STD

Figure 2-31. Honeycomb Panels – Crew Seat and Bulkhead Repair (Sheet 2 of 3)

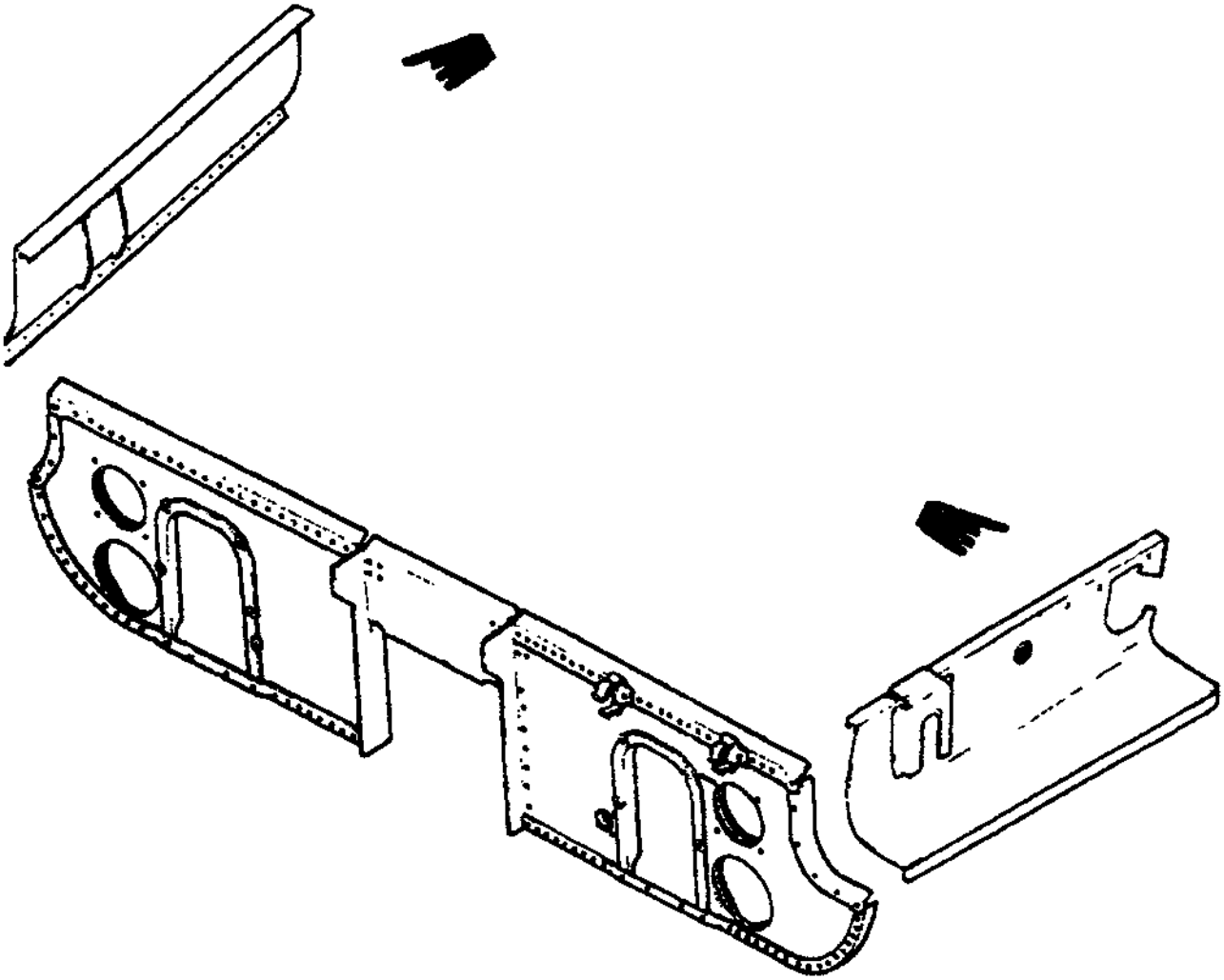

REPAIR LIMITS

STD EXCEPT:

Minor repairs only such as stop drilling cracks are acceptable. Repairs which add doublers etc., therefore increasing stiffness are not allowed.

Figure 2-31. Honeycomb Panels – Crew Seat and Bulkhead Repair (Sheet 3 of 3)

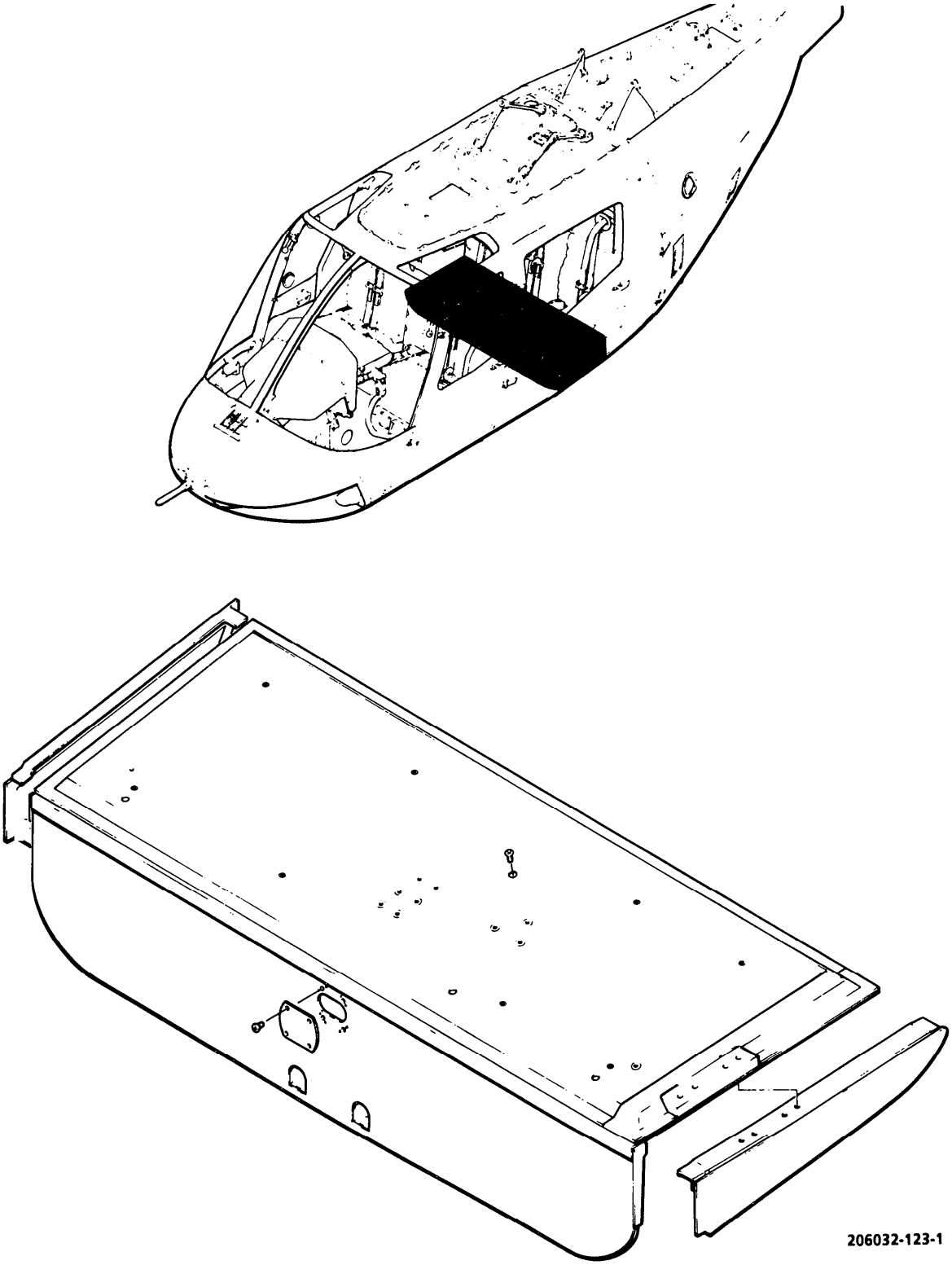

Figure 2-32. Honeycomb Panels — Passenger Seat Structure Repair (Sheet 1 of 4)

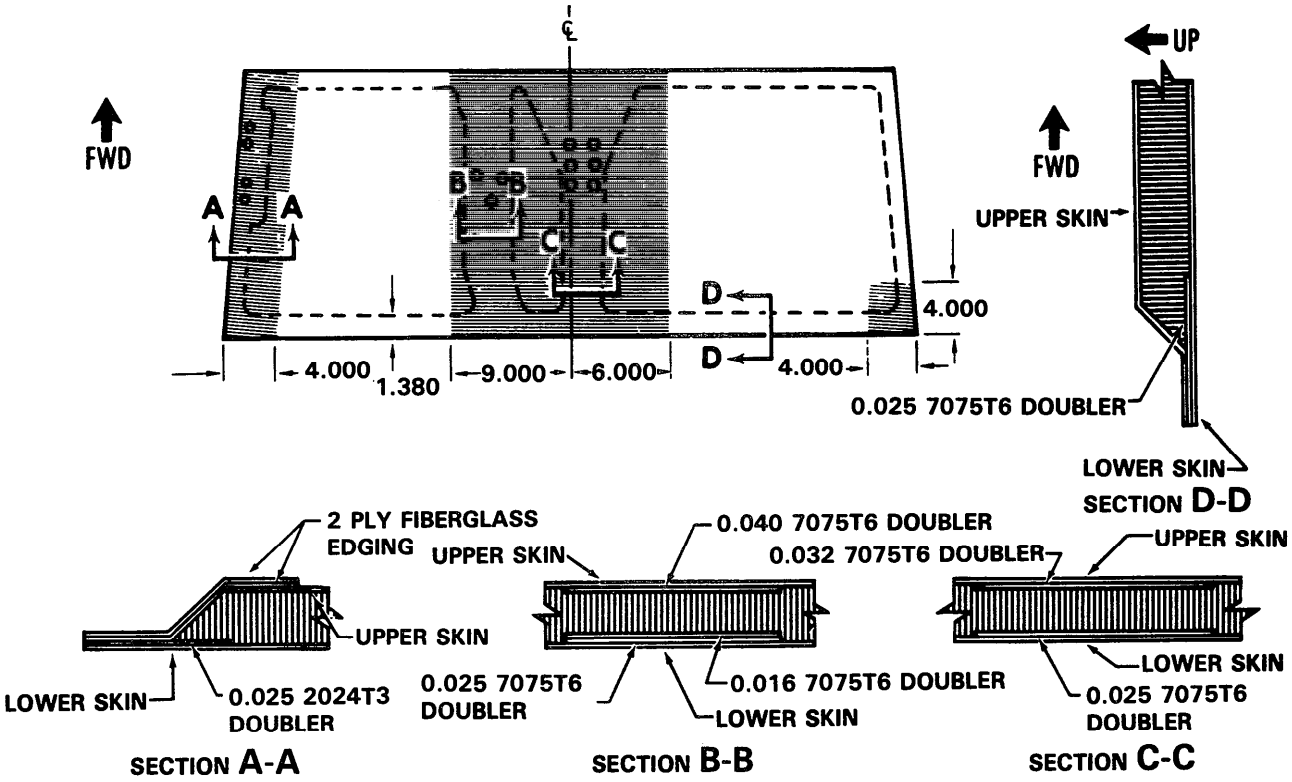

NOTE: All dimensions are in inches.

206032-123-2

GENERAL CONSTRUCTION:

UPPER SKIN	0.020 7075T6 SMOOTH
LOWER SKIN	0.016 7075T6 SMOOTH
CORE	0.500 THICK ALUMINUM HONEYCOMB
EDGING	FIBERGLASS EDGING 2 PLY OUTBOARD EDGES
	FIBERGLASS EDGING 1 PLY FWD EDGE 90 DEGREES 0.016 UPPER SKIN AFT EDGE

REPAIR LIMITS:

STD EXCEPT:

No major repairs in hatched area without AMCOM engineering approval

Figure 2-32. Honeycomb Panels — Passenger Seat Structure Repair (Sheet 2 of 4)

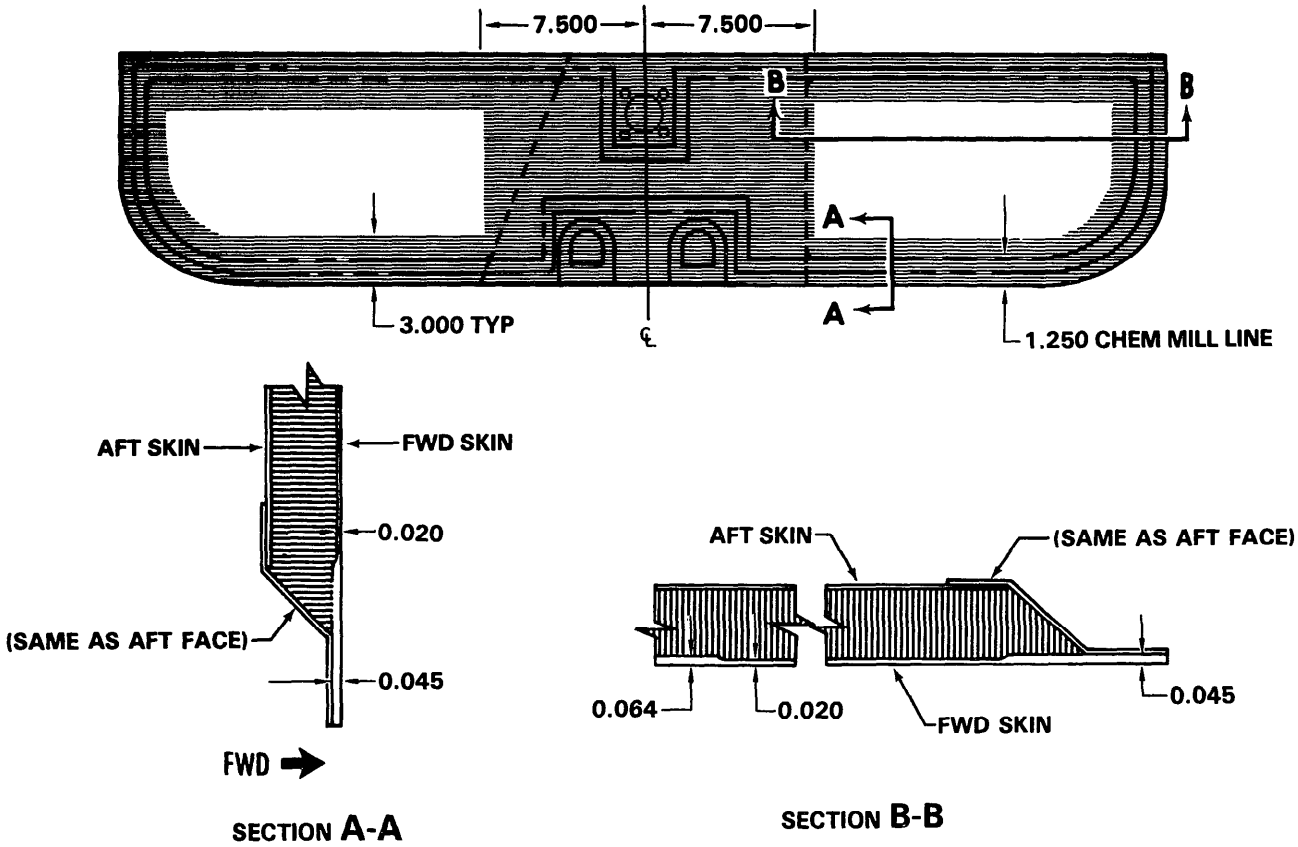

NOTE: All dimensions are in inches.

206032-123-3

GENERAL CONSTRUCTION:

FORWARD SKIN	0.064/0.045/0.020 7075T6 (CHEM-MILL STEPS)
AFT SKIN	2 PLY FIBERGLASS
CORE	0.500 THICK ALUMINUM HONEYCOMB
EDGING	SAME AS AFT FACE
	FIBERGLASS EDGING 1 PLY FWD EDGE 90 DEGREES 0.016 UPPER SKIN AFT EDGE

REPAIR LIMITS:

STD EXCEPT:

No major repairs in hatched area without AMCOM engineering approval

Figure 2-32. Honeycomb Panels — Passenger Seat Structure Repair (Sheet 3 of 4)

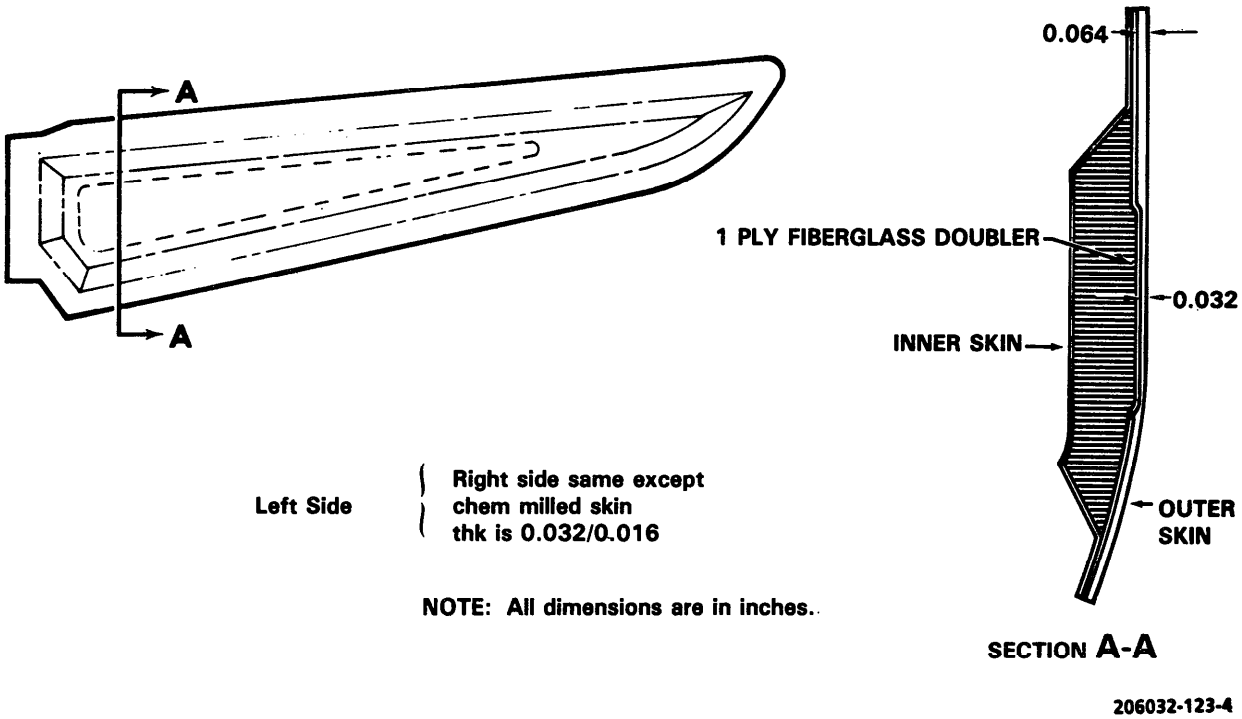

GENERAL CONSTRUCTION:

OUTER SKIN	0.032/0.016 2024T3 DOUBLER (CHEM-MILL)
OUTER SKIN	0.064/0.032 2024T3 DOUBLER (CHEM-MILL)
INNER SKIN	1 PLY FIBERGLASS
CORE	0.500 THICK ALUMINUM HONEYCOMB
EDGING	FIBERGLASS EDGING 2 PLY OUTBOARD EDGES
	0.500 THICK ALUMINUM HONEYCOMB INNER SKIN EXTENSION

REPAIR LIMITS:

Left Side - AMCOM engineering approval only

Right Side - Standard repair

Figure 2-32. Honeycomb Panels — Passenger Seat Structure Repair (Sheet 4 of 4)

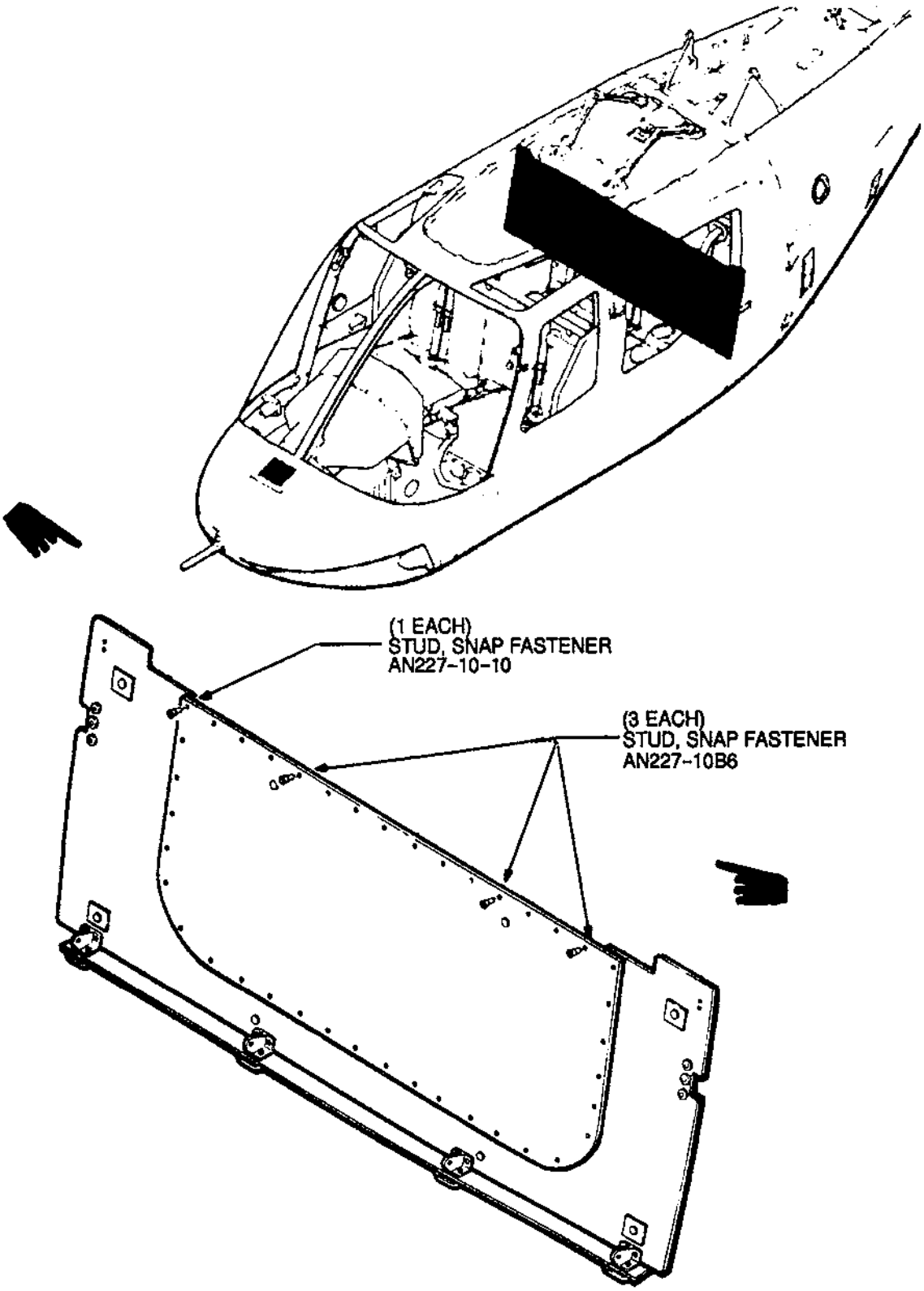

Figure 2-33. Honeycomb Panels - Passenger Seatback Bulkhead Repair (Sheet 1 of 2)

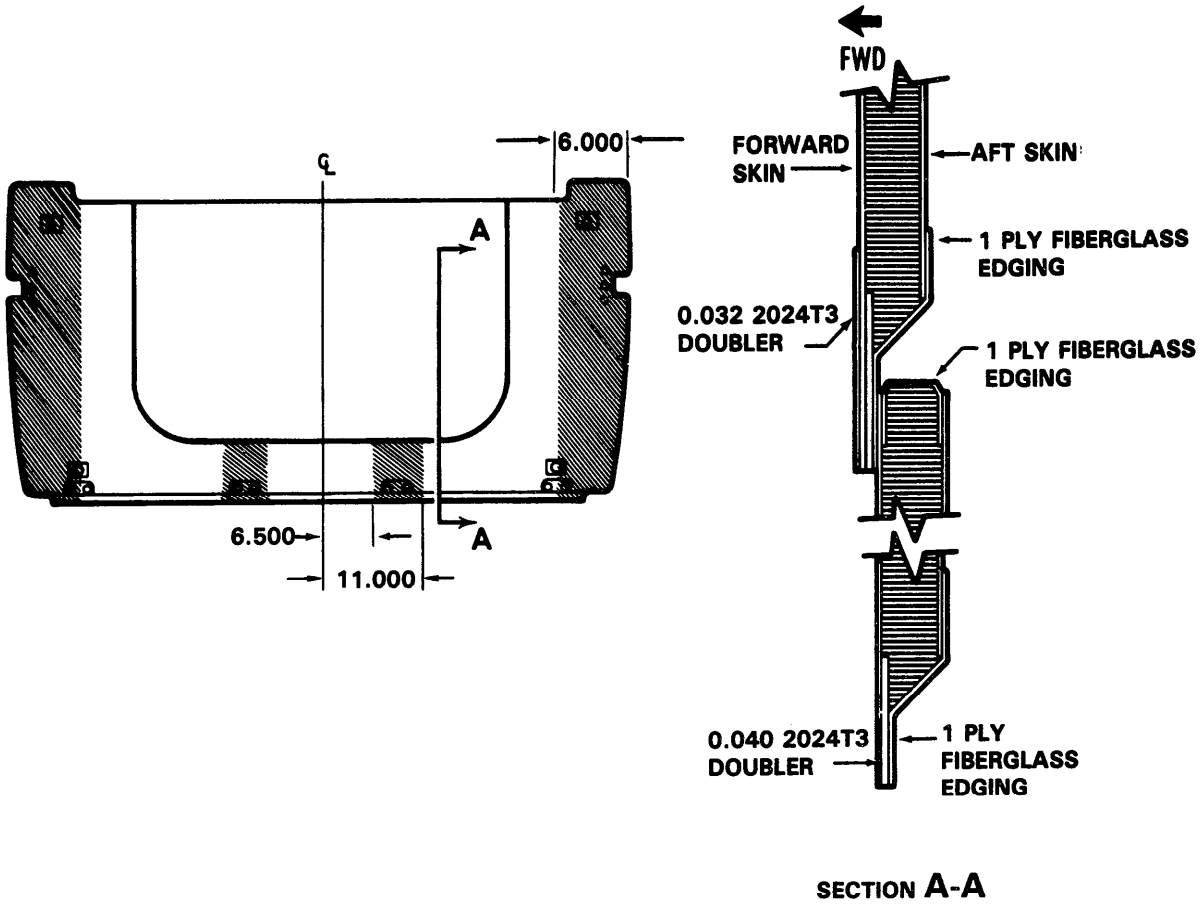

NOTE: All dimensions are in inches.

206032-124-2

GENERAL CONSTRUCTION:

FORWARD SKIN	0.012 2024T3 SMOOTH
AFT SKIN	0.016 2024T3 SMOOTH
CORE	0.500 THICK ALUMINUM HONEYCOMB
EDGING	FIBERGLASS EDGING 1 PLY ALL EDGES

REPAIR LIMITS:

STD EXCEPT:

No major repairs in hatched area without AMCOM engineering approval

Figure 2-33. Honeycomb Panels - Passenger Seatback Bulkhead Repair (Sheet 2 of 2)

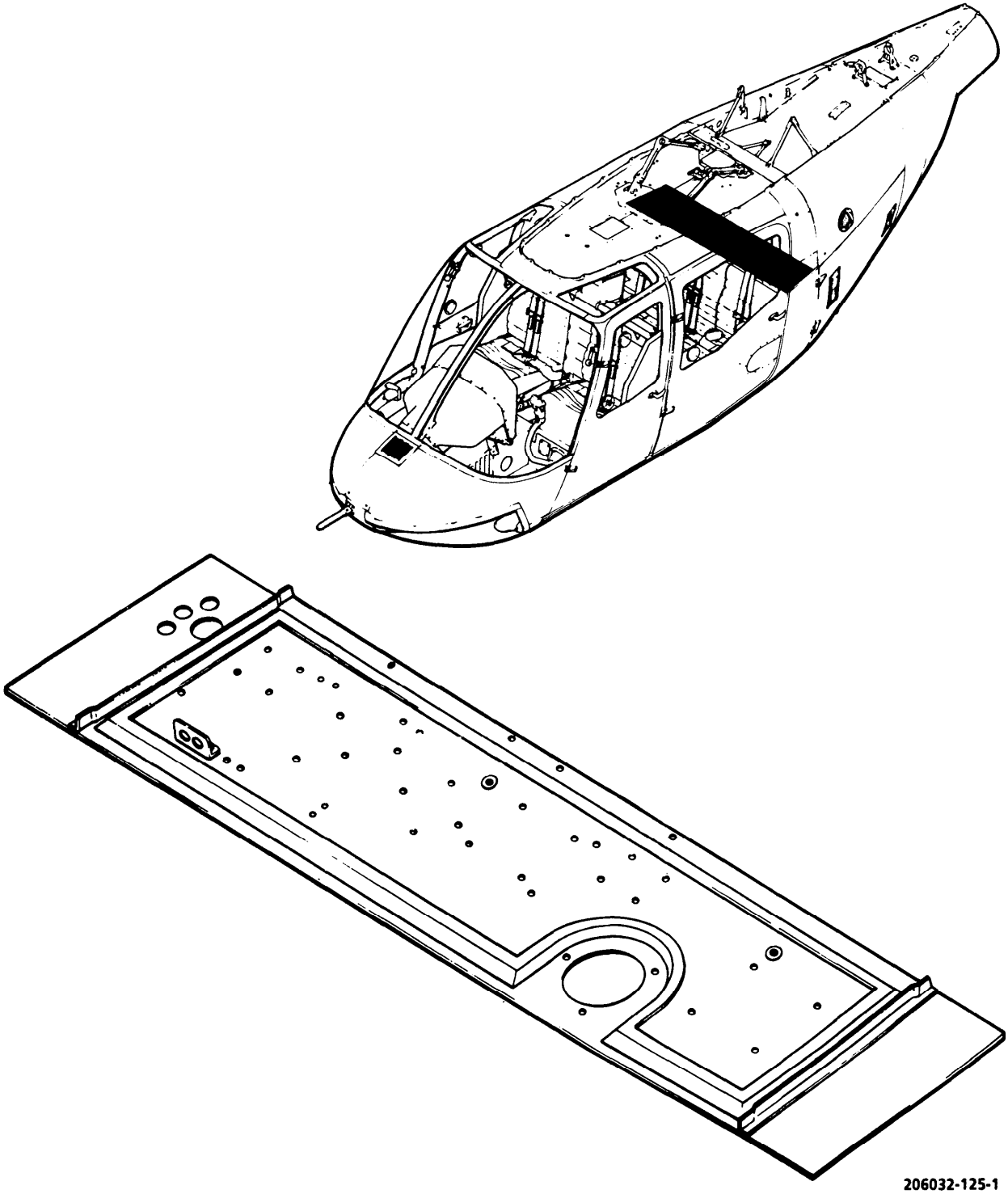

Figure 2-34. Honeycomb Panels — Seatback Electrical Shelf Repair (Sheet 1 of 2)

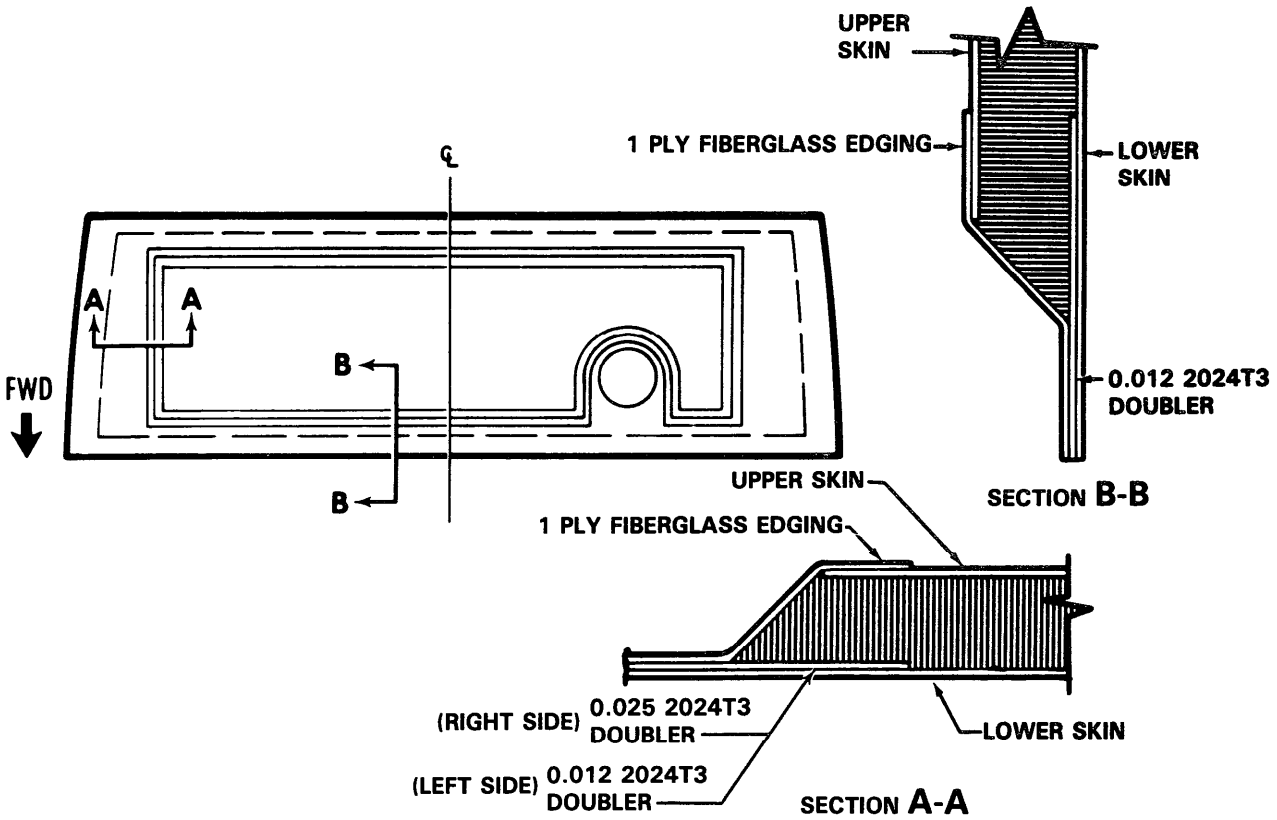

NOTE: All dimensions are in inches.

206032-125-2

GENERAL CONSTRUCTION:

UPPER SKIN	0.008 2024T3 SMOOTH
LOWER SKIN	0.008 2024T3 SMOOTH
CORE	0.500 THICK ALUMINUM HONEYCOMB
EDGING	1 PLY FIBERGLASS EDGING

REPAIR LIMITS:

STD

Figure 2-34. Honeycomb Panels — Seatback Electrical Shelf Repair (Sheet 2 of 2)

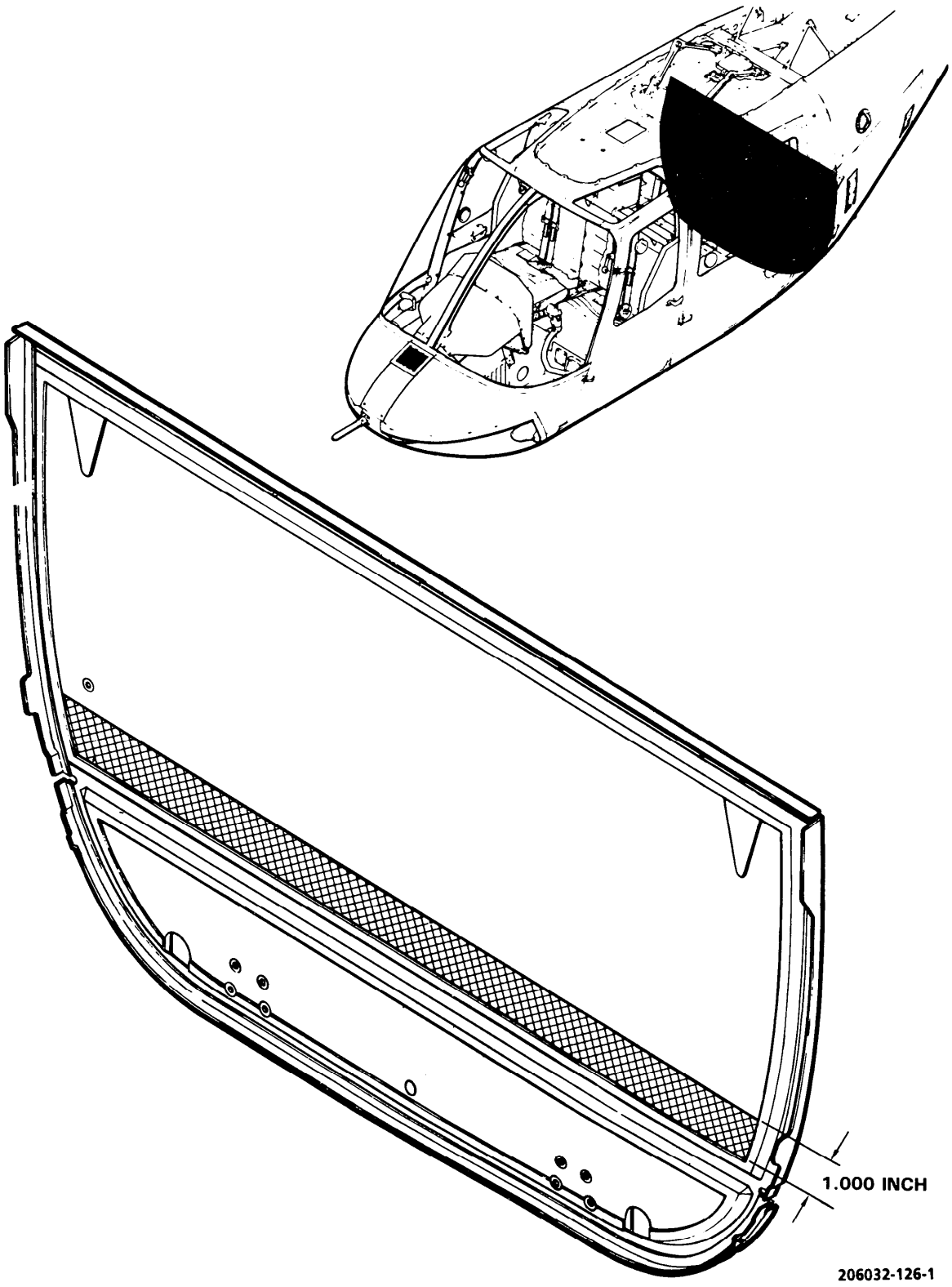

Figure 2-35. Honeycomb Panels — Aft Fuel Cell Bulkhead Repair (Sheet 1 of 2)

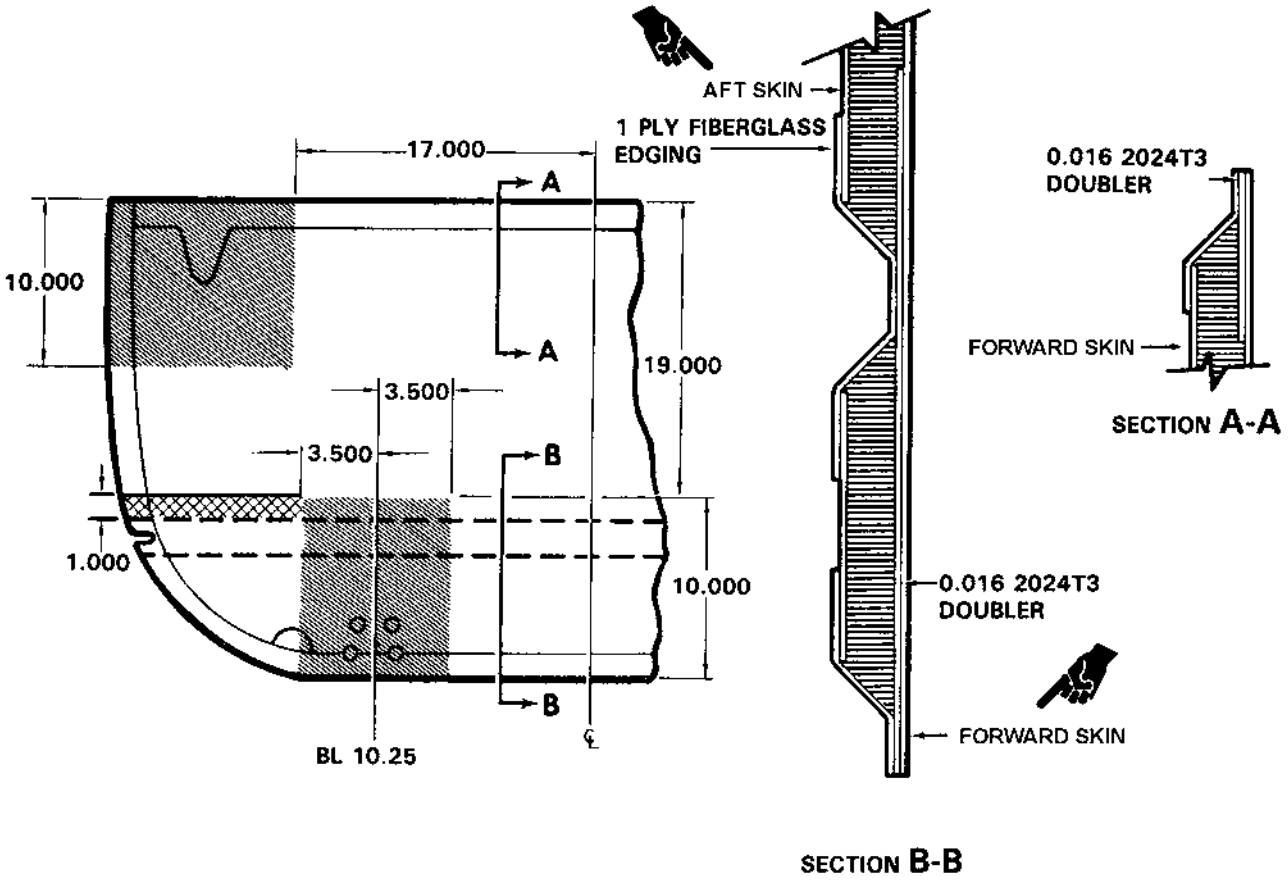

GENERAL CONSTRUCTION:

FWD SKIN	0.008 2024T3 SMOOTH
AFT SKIN	0.008 2024T3 SMOOTH
CORE	0.375 THICK ALUMINUM HONEYCOMB
EDGING	1 PLY FIBERGLASS EDGING

REPAIR LIMITS:

STD EXCEPT:

a) No major repairs in hatched area without AMCOM engineering approval

b) Note critical mounting surfaces

Figure 2-35. Honeycomb Panels — Aft Fuel Cell Bulkhead Repair (Sheet 2 of 2)

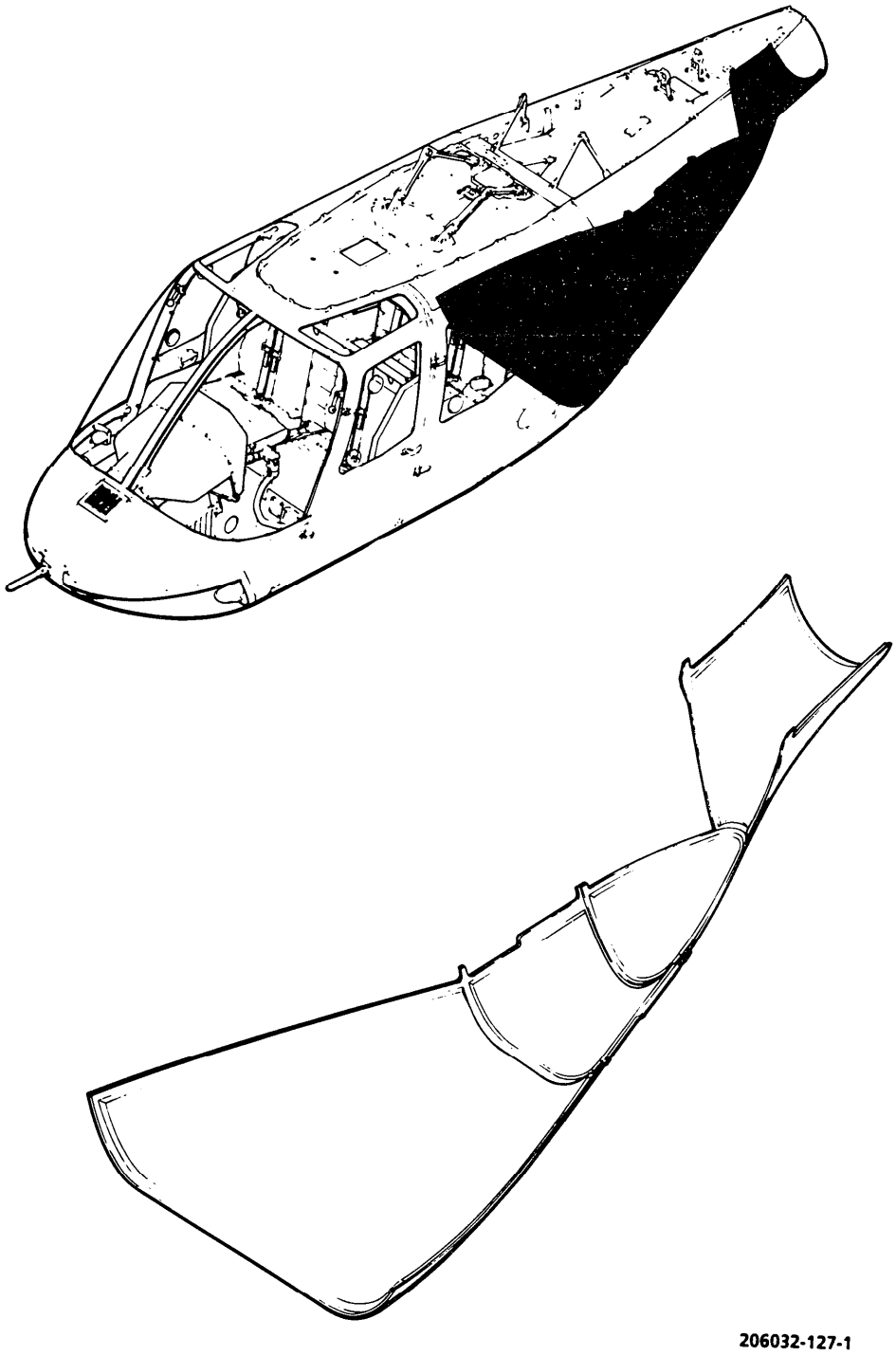

Figure 2-36. Honeycomb Panels — Lower Aft Fuselage Repair (Sheet 1 of 2)

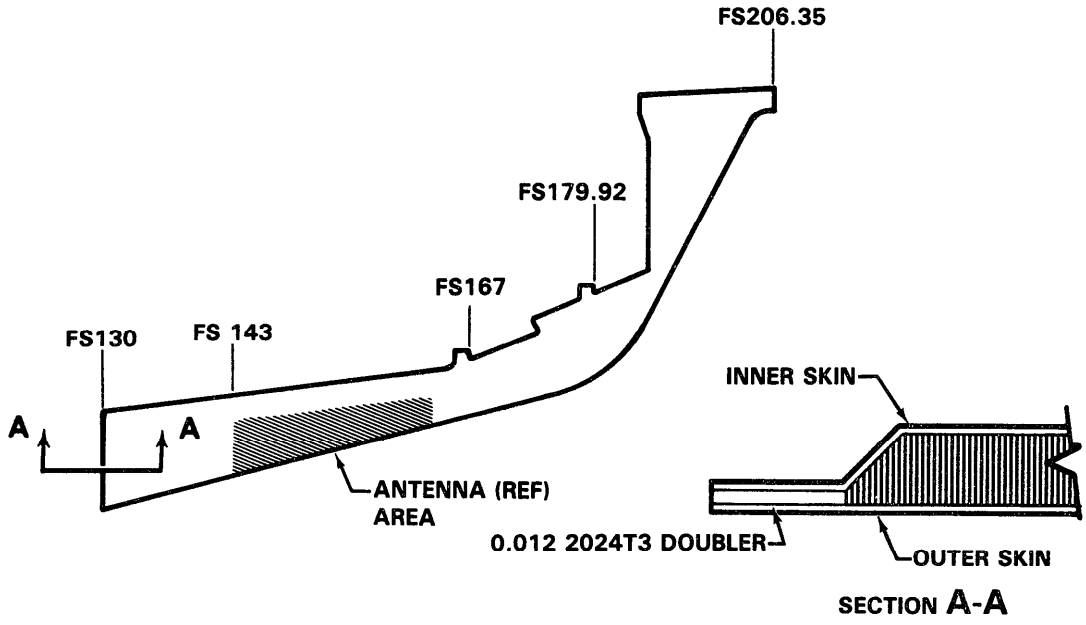

NOTE: All dimensions are in inches.

206032-127-2

GENERAL CONSTRUCTION:

INNER SKIN	1 PLY FIBERGLASS
OUTER SKIN	1 PLY FIBERGLASS
CORE	0.125 THICK ALUMINUM HONEYCOMB

REPAIR LIMITS:

STD EXCEPT:

Between FS 143 and FS 167 (Antenna area)

If antenna is operative, repairs using nonmetallic materials may be made

If antenna is inoperative, remove and replace or consult electronics personnel.

Figure 2-36. Honeycomb Panels — Lower Aft Fuselage Repair (Sheet 2 of 2)

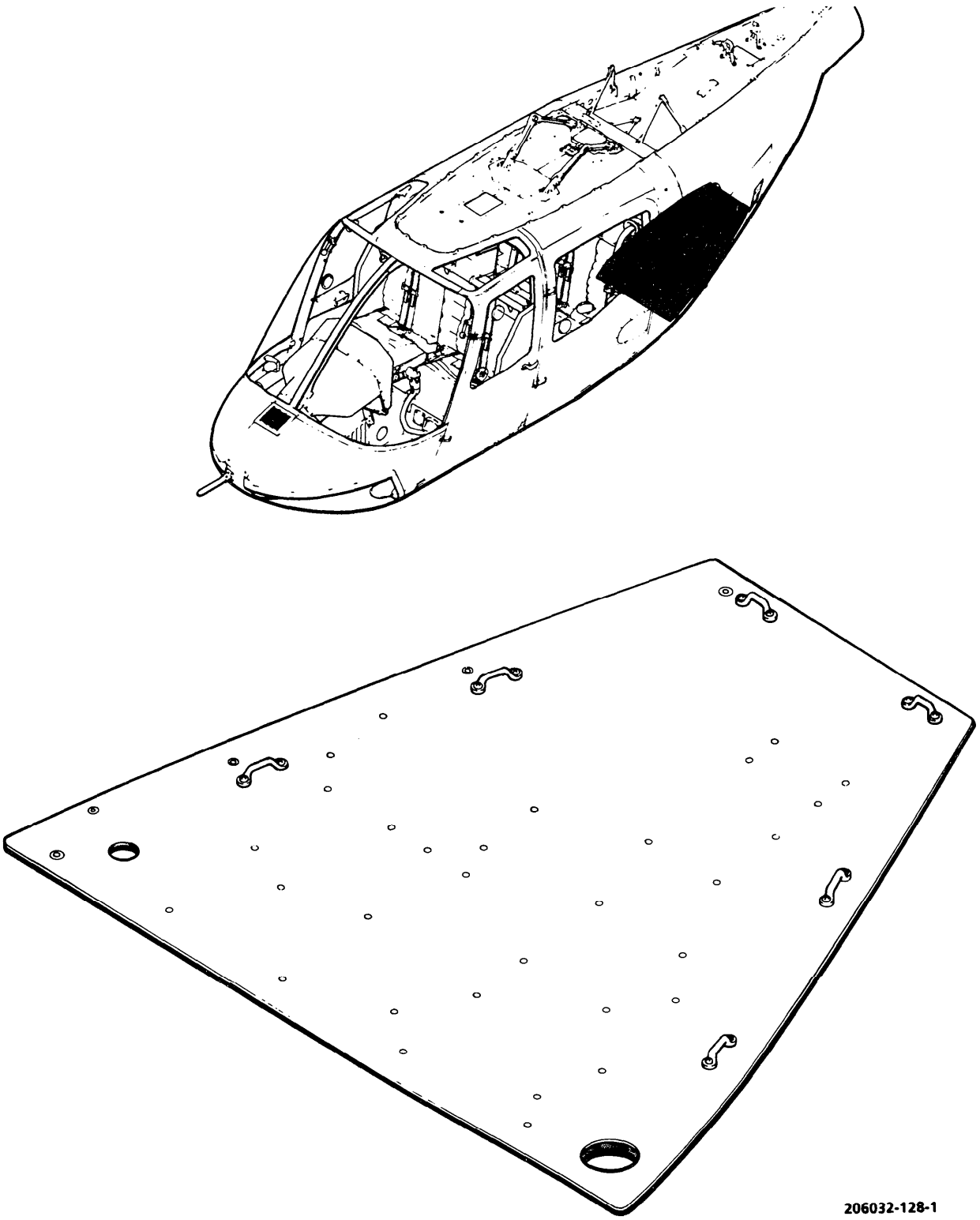

Figure 2-37. Honeycomb Panel — Electrical Compartment Floor Repair (Sheet 1 of 2)

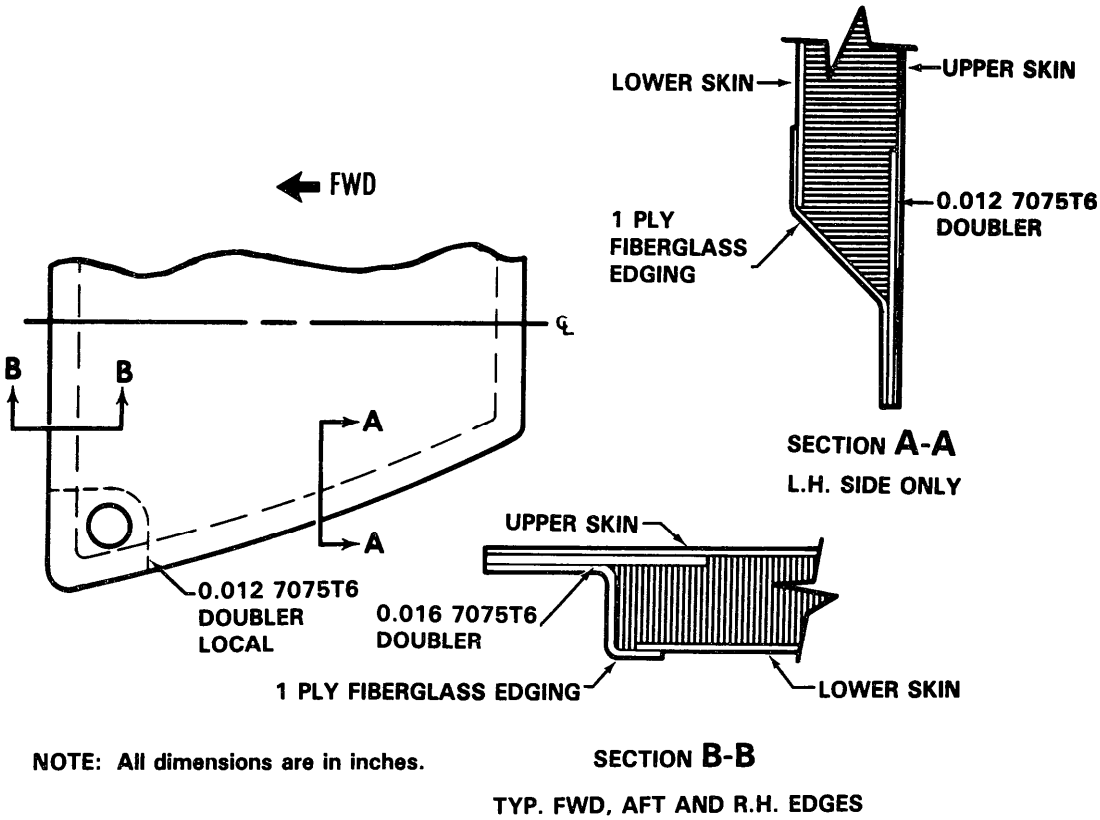

NOTE: All dimensions are in inches.

206032-128-2

GENERAL CONSTRUCTION

UPPER SKIN	0.012 7075T6 RIGIDIZED
LOWER SKIN	0.008 7075T6 RIGIDIZED
CORE	0.500 THICK ALUMINUM HONEYCOMB
EDGING	1 PLY FIBERGLASS EDGING

REPAIR LIMITS:

STD

INSTALLATION:

Compartment floor panel may be reinstalled using blind rivets throughout, or the lower skin on each side of the airframe must be loosened sufficiently to gain access for bucking. However, blind rivets must be utilized in any event along STA. 167 due to inaccessibility for bucking rivets. (SEE TM 1-1500-204-23.)

Figure 2-37. Honeycomb Panel — Electrical Compartment Floor Repair (Sheet 2 of 2)

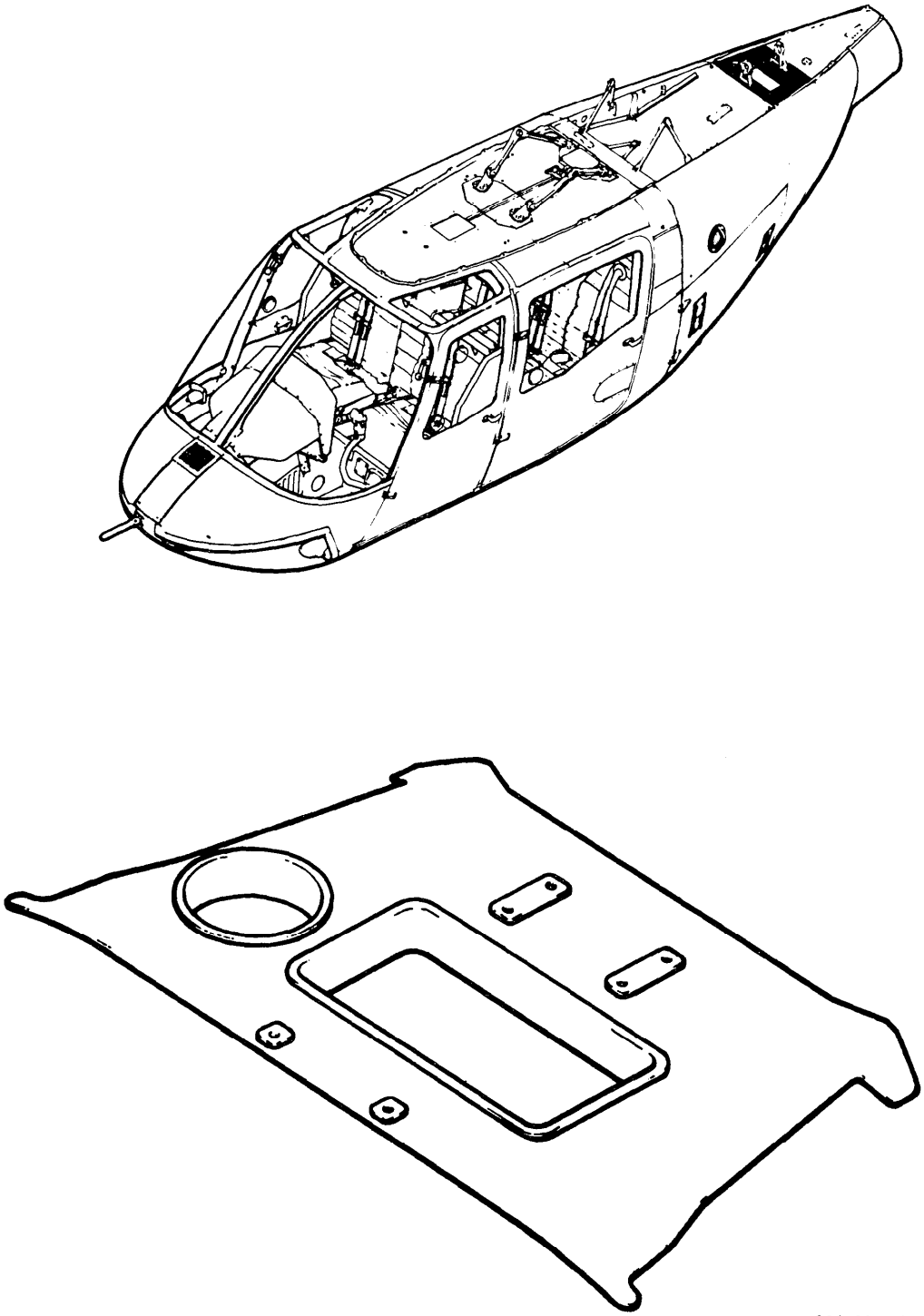

Figure 2-38. Honeycomb Panels — Oil Cooler Support Repair (Sheet 1 of 2)

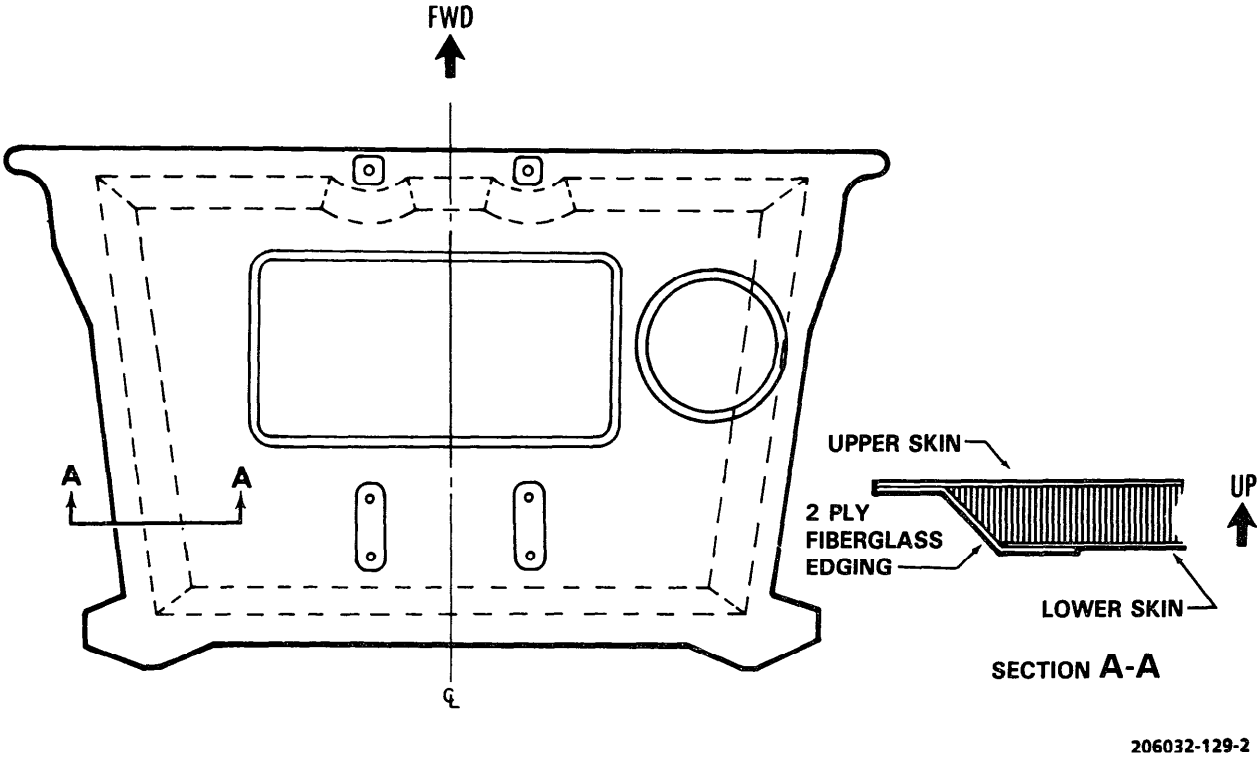

GENERAL CONSTRUCTION:

UPPER SKIN	0.032 2024T3 SMOOTH
LOWER SKIN	0.020 2024T3 SMOOTH
CORE	1.250 THICK ALUMINUM HONEYCOMB
EDGING	2 PLY FIBERGLASS EDGING

REPAIR LIMITS

No major repairs without AMCOM engineering approval.

Figure 2-38. Honeycomb Panels — Oil Cooler Support Repair (Sheet 2 of 2)

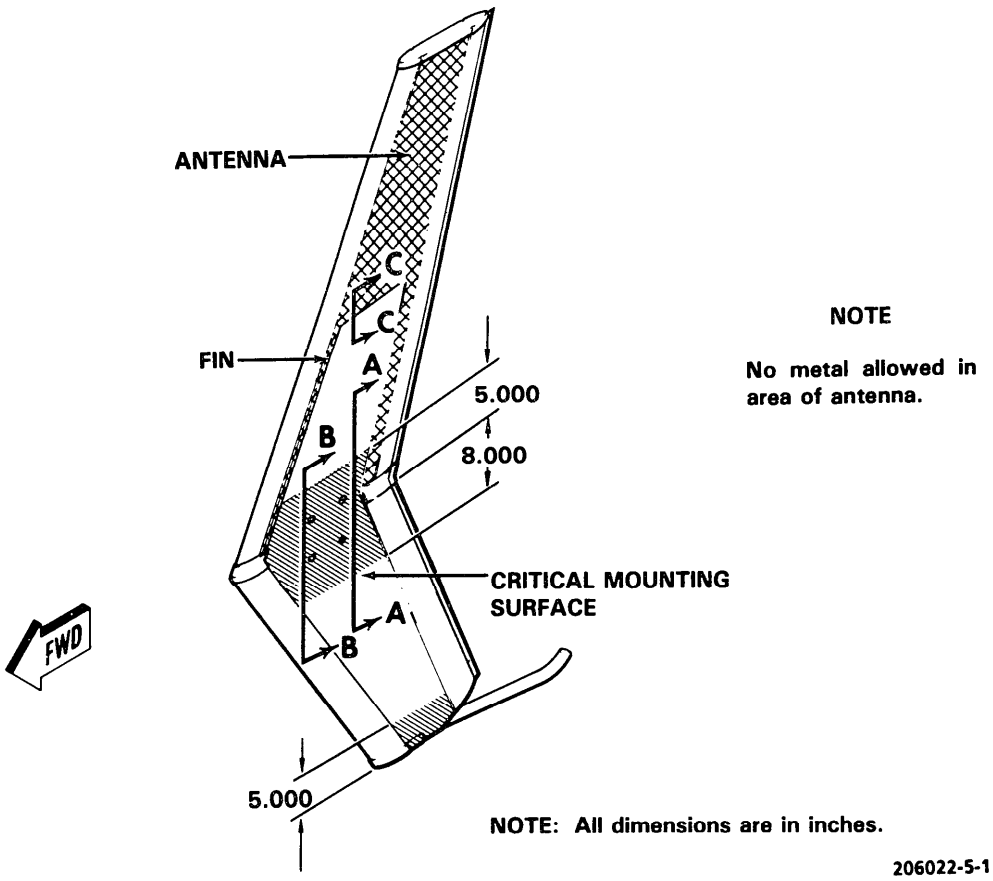

GENERAL CONSTRUCTION

206-022-133 ONLY

SKIN	0.040/0.030/0.010 2024T3 SMOOTH (CHEM-MILL)
CORE	1.250 THICK ALUMINUM HONEYCOMB UPPER AND LOWER
L.E.	0.012 2024T3 SMOOTH
T.E.	0.016 2024T3 SMOOTH
CORE SEAL	1 PLY FIBERGLASS

REPAIR LIMITS:

FIN:

STD EXCEPT:

No major repairs in hatched area without AMCOM engineering approval.
Note critical mounting surfaces.

SHEET METAL REPAIRS FOR TRAILING EDGE AND LEADING EDGE.

ANTENNA: (Crosshatched area)

If antenna is operative repairs using nonmetallic materials may be made.

If antenna is inoperative, remove and replace or consult electronics personnel.

Figure 2-39. Honeycomb Panels — Vertical Fin Repair (Sheet 1 of 2)

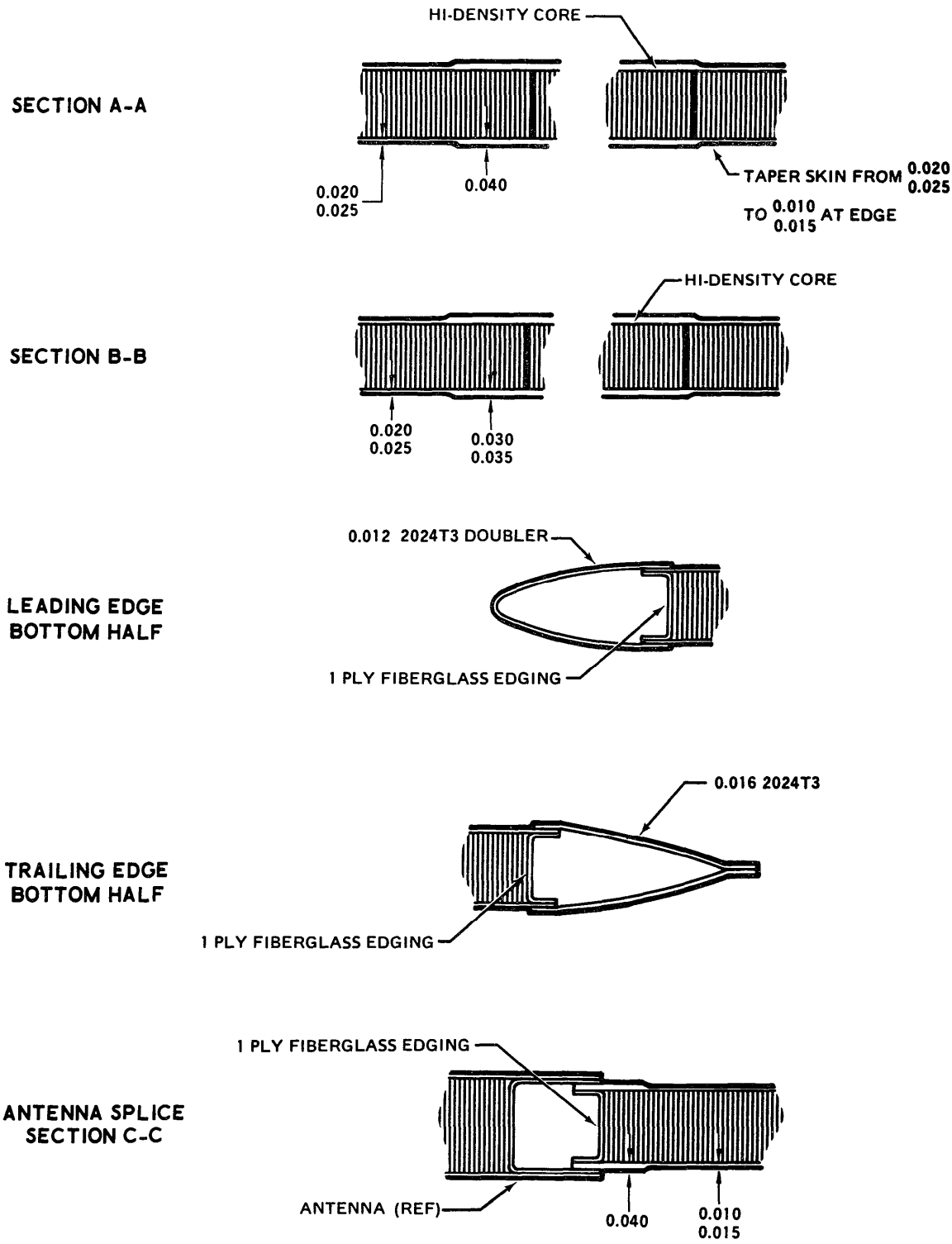

NOTE: All dimensions are in inches.

206022-5-2

Figure 2-39. Honeycomb Panels — Vertical Fin Repair (Sheet 2 of 2)

NOTE

Sounding method for identifying bond separation should not be used within a dented area. Limits established for dents shall apply.

b. Presence of bonding separation or void in a honeycomb panel can be detected by use of a sounding device (half-dollar or other like substitute). Tapping the metal covered surface of the panel will produce a dead or flat sound where bond separation (void) exists. Outline the area using a grease pencil. If an area is suspected then verify damage, refer to TM 1-1520-254-23, Technical Manual Aviation Unit Maintenance (AVUM) and Aviation Intermediate Maintenance (AVIM) Manual Nondestructive Inspection Procedures for OH-58 Helicopter Series.

c. The above tapping procedure in fiberglass honeycomb panels, sometimes results in a false indication of a void due perhaps to differences in thickness of the fiberglass layers, previous repairs, etc. When a void is suspected, further test the area by cutting the fiberglass skin in the middle of the suspect area using a hole saw not larger than the diameter of a half-dollar. When cutting the fiberglass skin, cut as little core material as possible; drill only deep enough to cut through the skin. If the area is void, the cut skin layer (wafer) will be loose. If the wafer remains bonded to the core material, no void is present. If no void is indicated, the test area must be repaired. Repair as follows: Clean the area by sanding with 100 grit sandpaper followed by 400 grit sandpaper. Add a minimum of two layers of fiberglass, each layer overlapping the test area or previous layer by approximately one inch. Bond thefiberglass using (C66 or C19). This test procedure may also be used on honeycomb panels with metal skins. If no void is found, the test area must be repaired by sanding as indicated above, then add a metal doubler as described in paragraph 2-187.

NOTE

Every effort should be made toward maintaining the highest standards of cleanliness possible and following the recommended general instruction repair procedures. In all repairs, the precautionary measures regarding inspection for water, fuel, and oil contamination and resultant corrosion must be taken.

2-173. REPAIR — HONEYCOMB PANELS — GENERAL.

CAUTION

Before making any structural repair refer to Maintenance Allocation Chart, Appendix B, to determine the level of maintenance responsible for a specific repair.

NOTE

Damage to honeycomb panels may be repaired by the following recommended methods within the limits described. The methods are a guide to obtain a repair which allows the panel to perform to its original design capability.

2-174. PREPARATION OF BONDING SURFACES.

WARNING

Acetone is extremely flammable and toxic to eyes, skin, and respiratory tract. Wear protective gloves and goggles/face shield. Avoid repeated or prolonged contact. Use only in well-ventilated areas (or use approved respirator as determined by local safety/industrial hygiene personnel). Keep away from open flames, sparks, hot surfaces or other sources of ignition.

a. Clean foreign material from parts to be bonded with clean cheesecloth (C37) moistened with acetone (C2). Wipe dry with clean cheesecloth (C37) prior to evaporation of acetone (C2).

b. Thoroughly sand surfaces to be bonded or to which filler is to be applied with silicon carbide wet or dry sandpaper (C125 or C126) to remove all surface finish, primer, and foreign material.

c. Mask off sanded surface area to protect surrounding area from cleaning solution.

WARNING

Acetone is extremely flammable and toxic to eyes, skin, and respiratory tract. Wear protective gloves and goggles/face shield. Avoid repeated or prolonged contact. Use only in well-ventilated areas (or use approved respirator as determined by local safety/industrial hygiene personnel). Keep away from open flames, sparks, hot surfaces or other sources of ignition.

d. Wipe sanded area with clean cheesecloth (C37) moistened with acetone (C2). Change cheesecloth frequently until all evidence of residue has been removed.

e. Immediately coat cleaned surface (metal only) with adhesive promoter A934BX or A934BY; allow a minimum of 30 minutes drying time.

f. Remove all tape from masked area.

g. Protect surface from contamination until final bonding is accomplished, using clean wrapping paper.

NOTE

Prebond (composite) material does not require cleaning per above instruction. Remove "peel ply" only and bond.

2-175. PREPARATION OF HONEYCOMB CORE PLUG. (AVIM)

a. Cut a core plug (use only clean material of the same type as original) to fit the damaged area allowing approximately **0.200** inch gap for adhesive at the edges.

WARNING

Acetone is extremely flammable and toxic to eyes, skin, and respiratory tract. Wear protective gloves and goggles/face shield. Avoid repeated or prolonged contact. Use only in well-ventilated areas (or use approved respirator as determined by local safety/industrial hygiene personnel). Keep away from open flames, sparks, hot surfaces or other sources of ignition.

b. Flush the plug with acetone (C2) and dry immediately with dry filtered air.

c. Apply a film of adhesive (C19) (**0.020 to 0.030** inch) to a piece of Tedlar (area to be equal to surface area of plug).

d. Place the core plug on the adhesive, apply firm contact to 5 psi pressure and allow adhesive to cure.

NOTE

This will seal the core cells and provide a better bonding surface. If both panel skins are affected, both sides of plug should be sealed.

e. Protect the core plug from contamination until ready for use.

2-176. CLEANING OF HONEYCOMB CORE CAVITY. (AVIM)

a. Remove all loose debris from cavity.

WARNING

Acetone is extremely flammable and toxic to eyes, skin, and respiratory tract. Wear protective gloves and goggles/face shield. Avoid repeated or prolonged contact. Use only in well-ventilated areas (or use approved respirator as determined by local safety/industrial hygiene personnel). Keep away from open flames, sparks, hot surfaces or other sources of ignition.

WARNING

Aliphatic Naphtha is flammable and toxic to eyes, skin, and respiratory tract. Wear protective gloves and goggles/face shield. Avoid repeated or prolonged contact. Use only in well-ventilated areas (or use approved respirator as determined by local safety/industrial hygiene personnel). Keep away from open flames, sparks or other sources of ignition.

CAUTION

Use filtered air with pressure not to exceed 30 psi.

b. Flush cavity using acetone (C2), or aliphatic naphtha (C22) and dry immediately with clean, filtered, dry, compressed air.

c. Protect cleaned cavity from contamination until ready for subsequent operation.

CAUTION

Any core or skin contaminated by fuel, oil, water, corrosion or debris must be cut out.

2-177. REMOVAL OF PAINT AND PRIMER FROM HONEYCOMB PANELS. (AVIM)

CAUTION

Use only acetone (C2) to remove paint from skins and edging or exposed adhesive bond lines.

NOTE

Excessive application of acetone (C2) can affect bonding agents. Strip these areas by wiping rather than soaking.

a. Conventional finishes (varnishes, alkyd enamels, zinc chromate primer, etc).

(1) Mask off area to be stripped using tape (C143).

WARNING

Acetone is extremely flammable and toxic to eyes, skin, and respiratory tract. Wear protective gloves and goggles/face shield. Avoid repeated or prolonged contact. Use only in

well-ventilated areas (or use approved respirator as determined by local safety/industrial hygiene personnel). Keep away from open flames, sparks, hot surfaces or other sources of ignition.

(2) Brush apply acetone (C2).

(3) Remove lifted paint with a stiff fiber bristle brush (C31).

WARNING

Acetone is extremely flammable and toxic to eyes, skin, and respiratory tract. Wear protective gloves and goggles/face shield. Avoid repeated or prolonged contact. Use only in well-ventilated areas (or use approved respirator as determined by local safety/industrial hygiene personnel). Keep away from open flames, sparks, hot surfaces or other sources of ignition.

(4) Final clean wipe with clean cheesecloth (C37) moistened with acetone (C32) prior to evaporation of acetone.

b. Acrylic finishes.

(1) Mask off area to be stripped using tape (C143).

(2) Remove paint using silicon carbide sandpaper (C125) or finer.

c. Epoxy finish.

(1) Mask off area to be stripped using tape (C143).

(2) Remove paint using non-silicon sandpaper (C125) or finer.

(3) Wipe with clean cheesecloth (C37) until all evidence of residue has been removed.

2-178. NEGLIGIBLE HONEYCOMB PANEL DAMAGE — LIMITS AND REPAIR.

NOTE

Damage classified as negligible does not require repair.

2-179. LIMITATIONS — NEGLIGIBLE HONEYCOMB PANEL DAMAGE.

a. Nonsharp dents up to **5** percent of panel thickness provided:

(1) Total damage shall not exceed **5** percent of panel area.

(2) Edge of any dent must be at least **1.000** inch from any structural member, fitting, control support and from the panel edge bevel. Dents closer than **1.000** inch shall be considered as one dent.

b. Nonsharp dents up to **10** percent of panel thickness provided.

(1) Diameter does not exceed **0.500** inch.

(2) No more than three dents can be encompassed by a **4.000** inch diameter circle.

NOTE

Dents closer than **1.000** inch (edge to edge) shall be considered as one dent.

(3) The edge of any dent must be at least **1.000** inch from any structural member, fitting control support or the panel edge bevel.

NOTE

Edge separation and detectable voids (bond failure or delaminations) may never be classified as negligible damage. Refer to paragraphs 2-181 or 2-185 for limitations and repair procedures.

2-180. REPAIR — NEGLIGIBLE HONEYCOMB PANEL DAMAGE.

CAUTION

Do not oversand fiberglass skin. Weakening of serviceable panel area will occur.

NOTE

This repair applies to either aluminum or fiberglass faced panels and is optional (for appearance only).

a. Prepare bonding surface per instructions in paragraph 2-173.

b. Apply adhesive (C19) and blend to undamaged surface. Allow cure time as required.

c. Refinish as necessary.

2-181. DEFINITION — MINOR PANEL DAMAGE. Punctures, sharp dents, creases, dents to only one skin and core exceeding **10** percent of the panel thickness but not exceeding **0.500** inch diameter after cleanup.

2-182. LIMITATIONS — MINOR PANEL DAMAGE.

a. Maximum diameter of hole after cleanup shall not exceed **0.500** inch. Refer to figure 2-40.

b. No more than two such areas shall be encompassed by a **4.000** inch diameter circle and any two damaged edges shall not be closer than **1.000** inch. Damage closer than **1.000** inch shall be considered as one area.

c. Edge of cleanup shall be a minimum of **3.000** inches from any attachment point or insert attaching a structural member, fitting, or control support or as noted on the illustration for a specific panel.

d. The edge of the cleanup shall be a minimum of **3.000** inches from any panel edge or cutout or as noted on the illustration for a specific panel.

NOTE

All damage exceeding the above must be treated as major damage.

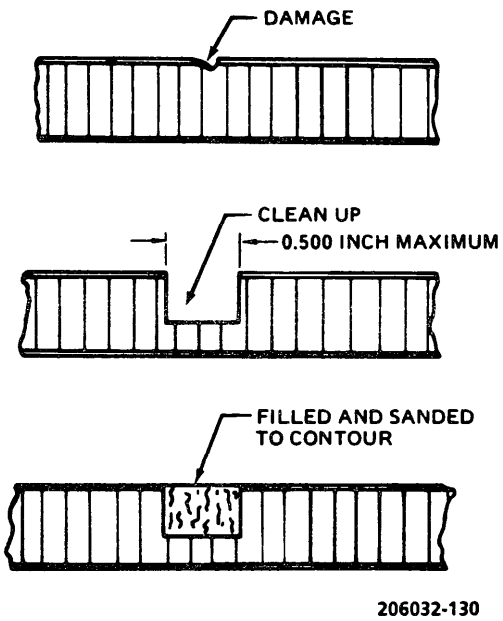

Figure 2-40. Honeycomb Panels — Minor Damage Repair

2-183. REPAIR — MINOR PANEL DAMAGE.

CAUTION

Removal of damaged or voided areas in honeycomb panels must be accomplished with care, so as not to further damage the surrounding area. Exercise extreme care to prevent damage to inner skin. Use of pointed or sharp tools to extract the loosened, damaged core from the panel will be accomplished with caution.

a. Protect the opening to prevent entry of cleaning agents and solvents.

b. Remove paint and primer from an area extending **3.000** inches beyond the edge of damage.

CAUTION

Any core or skin contaminated by fuel, oil, water, corrosion or debris must be cut out.

c. Cut away skin and core to remove all damaged and contaminated material.

WARNING

Acetone is extremely flammable and toxic to eyes, skin, and respiratory tract. Wear protective gloves and goggles/face shield. Avoid repeated or prolonged contact. Use only in well-ventilated areas (or use approved respirator as determined by local safety/industrial hygiene personnel). Keep away from open flames, sparks, hot surfaces or other sources of ignition.

d. Flush cavity with acetone (C2). Dry promptly with clean, dry, compressed air.

e. Fill cavity with adhesive (C19).

f. When adhesive has cured, sand to contour and refinish.

2-184. MAJOR PANEL DAMAGE — LIMITS AND REPAIR. (AVIM). Refer to figure 2-41.

2-185. DEFINITION — MAJOR PANEL DAMAGE. All punctures, voids or dents that require a cleanup hole in excess of **0.500** inch diameter.

NOTE

Restrictions as outlined in figures 2-28 thru 2-39 for specific panels will take precedence over these limits.

2-186. LIMITATIONS — MAJOR PANEL DAMAGE.

a. Maximum length of cleanup of **5.000** inches in any direction.

b. Maximum of two repairs per panel that shall be separated by **5.000** inches between edges of cleanup.

c. Total damage not to exceed **12.000** square inches when only one skin and core is affected or **10.000** square inches when both skins are affected.

d. Edge of cleanup shall be a minimum of **3.000** inches from any attachment point or insert attaching a fitting or control support or as noted on the illustration for a specific panel.

e. The edge of the cleanup shall be a minimum of **3.000** inches from any panel edge or cutout or as noted on the illustration for a specific panel.

NOTE

When damage exceeds the above limits, repairs may be accomplished only with the approval of and per instructions of qualified AMCOM engineering authority.

2-187. REPAIR — MAJOR PANEL DAMAGE.

a. Protect the opening to prevent entry of cleaning agents and solvents.

b. Remove paint and primer from an area extending **3.000** inches beyond the edge of damage.

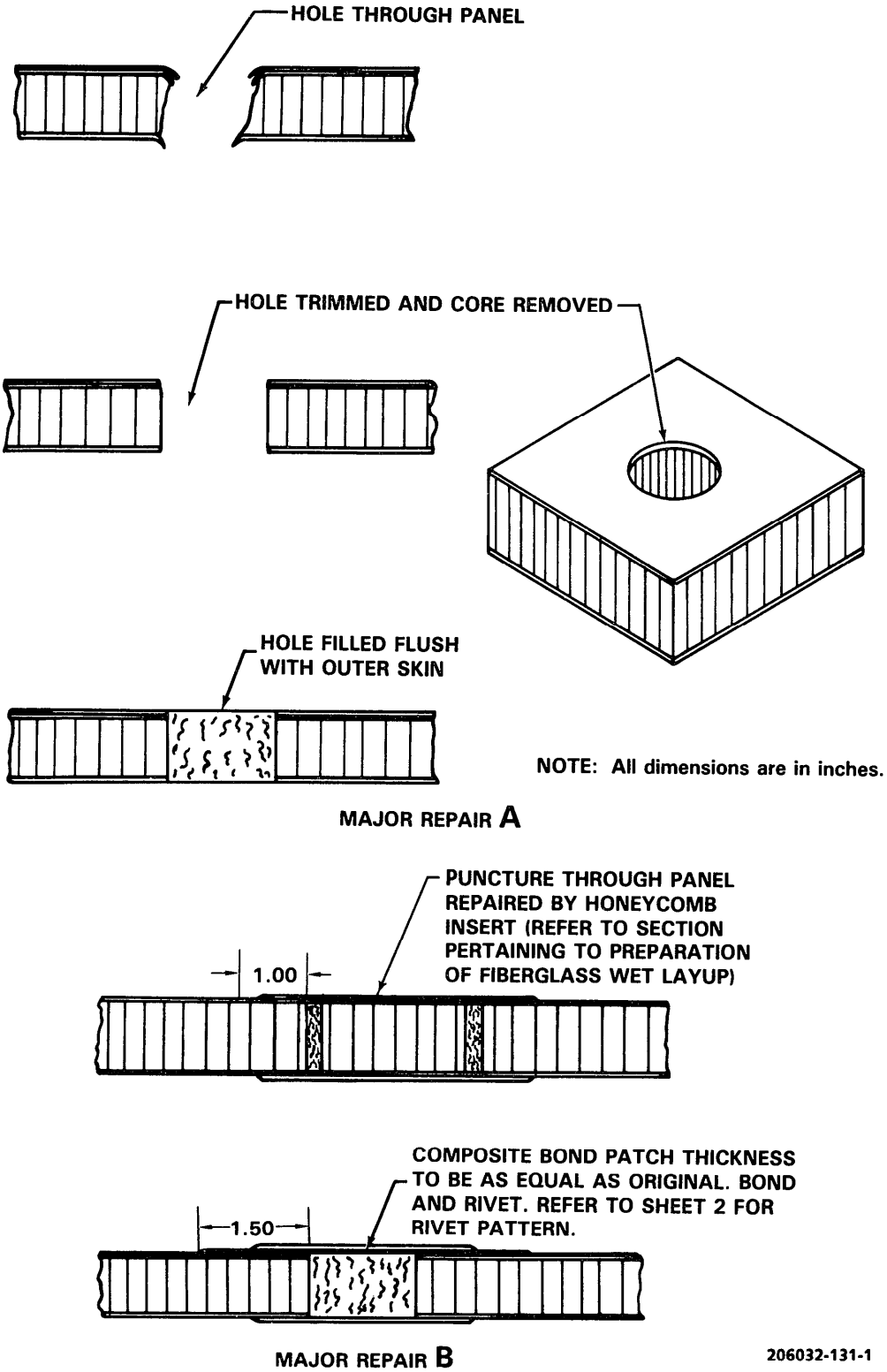

Figure 2-41. Honeycomb Panels — Major Damage Repair (Sheet 1 of 2)

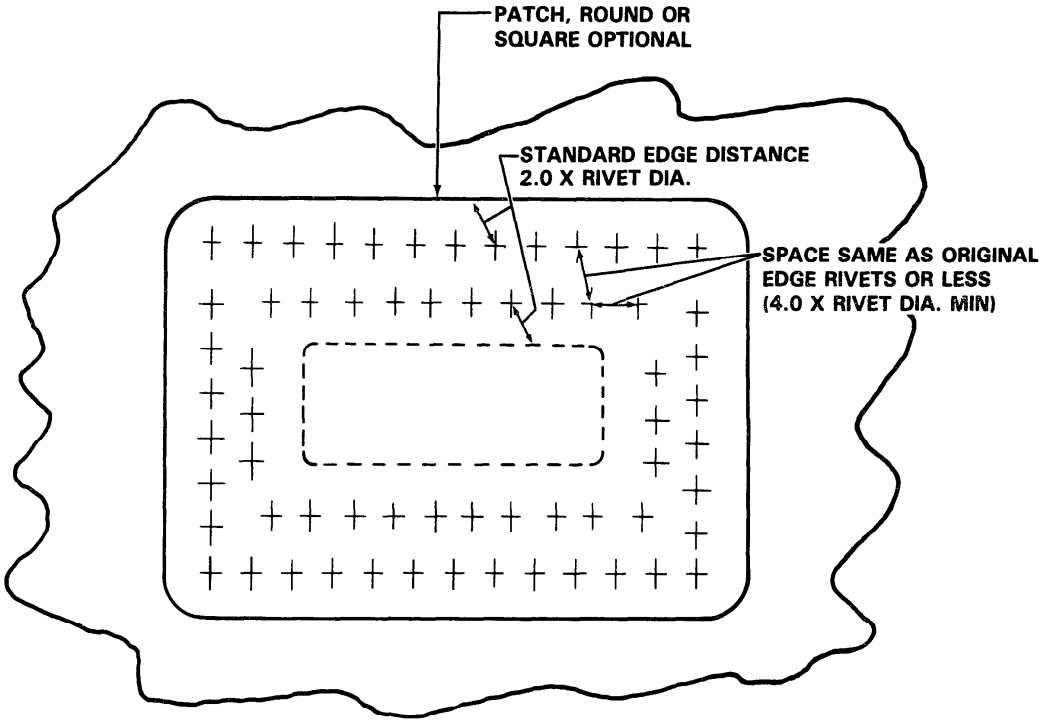

RIVETING OF METAL PATCHES 206032-131-2

Figure 2-41. Honeycomb Panels — Major Damage Repair (Sheet 2 of 2)

c. Cut away skins and core to remove all damaged and contaminated material. Use a minimum of **0.500** inch radius at corners.

WARNING

Acetone is extremely flammable and toxic to eyes, skin, and respiratory tract. Wear protective gloves and goggles/face shield. Avoid repeated or prolonged contact. Use only in well-ventilated areas (or use approved respirator as determined by local safety/industrial hygiene personnel). Keep away from open flames, sparks, hot surfaces or other sources of ignition.

CAUTION

Any core or skin contaminated by fuel, oil, water, corrosion or debris must be cut out.

NOTE

Where damage is limited to one skin, the opposite skin may be left intact provided cleanup operations do not cut into the skin.

d. Flush the cavity with acetone (C2). Dry promptly with clean, dry, compressed air.

e. Fill the cavity as follows:

(1) Damage of **1.000** inch or less in diameter may be filled with adhesive (C19) and smoothed to contour of skins.

(2) Damage exceeding **1.000** inch in diameter to be filled with a core plug of like honeycomb material. Seal top and bottom surfaces of plug with adhesive (C19) and allow to cure. Refer to paragraph 2-175 for preparation of honeycomb core plug.

f. Patch skin as follows:

(1) Fiberglass skins.

NOTE

Fiberglass skin repairs should be accomplished after core plug has cured.

(a) Prepare a patch of fabric layers (equal to number of plies lost) to provide a minimum of a **1.000** inch overlap outside the damaged skin trim and to provide a minimum of **1.000** inch overlap over each proceeding layer.

(b) Saturate the first patch with epoxy resin (C66). Apply resin to the exposed filler and to the exposed clean area of the panel around the damage.

(c) Fit the impregnated patch into place. Smooth out air pockets and wrinkles.

NOTE

Ensure that adequate resin is forced through the patch ply in the core area.

(d) Saturate each succeeding ply with resin and brush coat the entire area with resin and apply the patch. Work each ply to remove the wrinkles and entrapped air prior to application of the next ply. Minimum number of plies to be the same as existing skin.

CAUTION

Use of a vacuum bag will remove resin from patch area unless adequate seal is accomplished.

(e) Cover repair with cellophane and apply firm contact pressure to the patch with shot bags, clamps, vacuum bag or other suitable means.

(2) Metal skins.

NOTE

Repair any hole or dent caused by seat belt anchor bolt. Refer to figure 2-14.

(a) Cut a skin patch (prebond, i.e., composite bond material), sufficiently large to provide a **1.500** inch overlap outside of the damaged skin trim; remove the peel ply protecting the adhesive and apply adhesive (C19) evenly to the patch **0.020 to 0.030** inch thick. Minimum patch thickness to be that of existing skin.

NOTE

Where the panel is curved, the skin patch must be shaped to match.

(b) Install skin patch over the repair area.

(c) Add NAS1738B4-1 rivets or equivalent around patch in the overlapped area at a maximum spacing of **1.500** inches and with 2D edge distance. Rivets are to be installed within the pot life of the adhesive.

(d) Apply pressure to the patch in the cavity area to ensure a good bond.

2-188. HONEYCOMB PANEL MINOR EDGE DAMAGE — LIMITS AND REPAIR. (AVIM)

2-189. LIMITATIONS — HONEYCOMB PANEL MINOR EDGE DAMAGE (FIGURE 2-42).

NOTE

The following minor edge damage criteria applies only to those panels with a fiberglass skin on the edge bevel.

a. Damage is restricted to fiberglass edge and core (metal skins and doublers are not damaged).

b. Damage to the core does not extend more than **0.500** inch inside the inboard edge of the bevel (top) after cleanup.

c. Maximum length of damage shall not exceed **2.000** inches after cleanup.

d. Maximum number of repairs not to exceed three per panel with a minimum of **2.000** inches between edges of cleanup.

2-190. REPAIR — HONEYCOMB PANEL MINOR EDGE DAMAGE (FIGURE 2-42).

a. Protect the opening to prevent entry of cleaning agents and solvents.

b. Remove paint and primer for an area extending three inches beyond the edge of damage.

CAUTION

Any core or skin contaminated by fuel, oil, water, corrosion or debris must be cut out.

c. Cut away edge skin and core to remove all damaged and contaminated material.

FIBERGLASS SKINNED PANELS

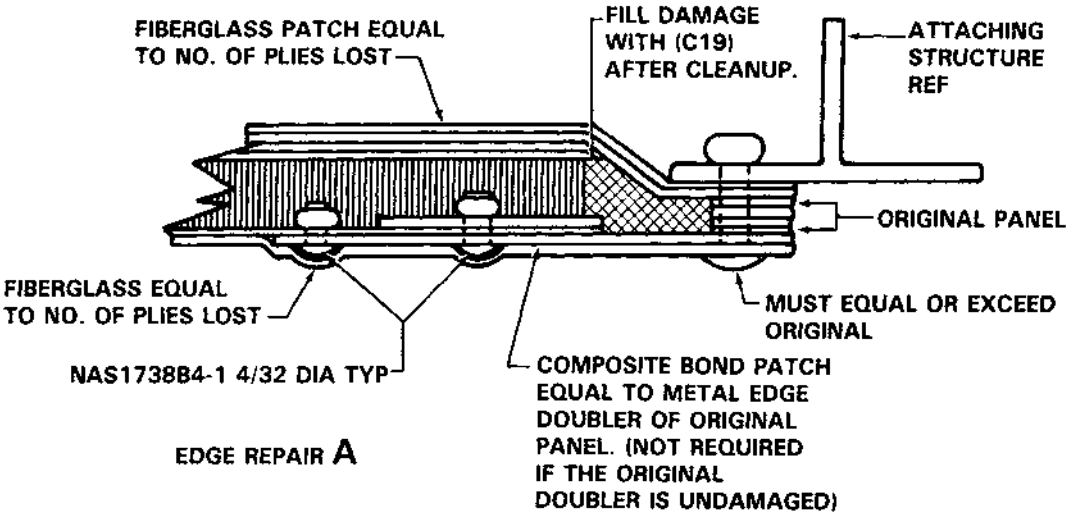

EDGE REPAIR **A**

NOTE

Two-part adhesive (C19) should be used for making fiberglass wet layup repairs when a bond to metal is required. Exercise care to ensure that cloth is thoroughly impregnated.

METAL SKINNED PANELS WITH METAL EDGE BEVEL

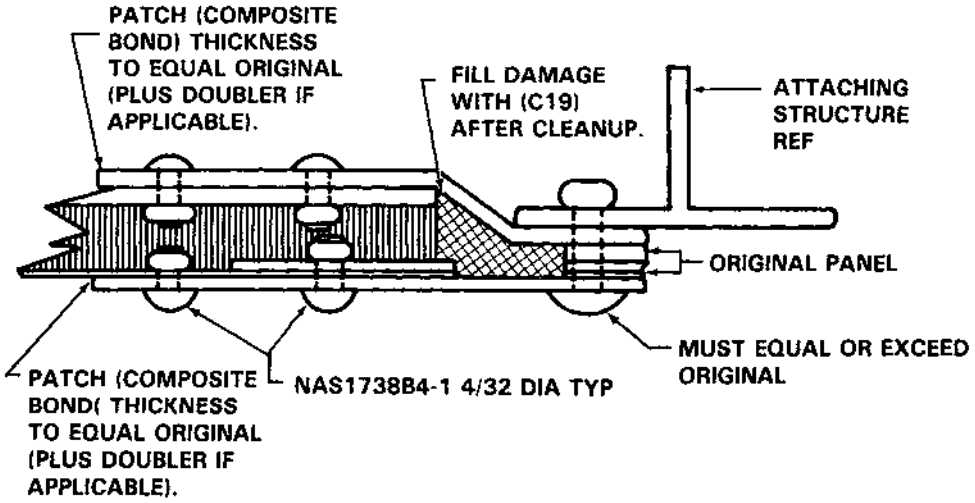

EDGE REPAIR **B**

206032-132-1

Figure 2-42. Honeycomb Panels — Edge Damage Repairs (Sheet 1 of 2)

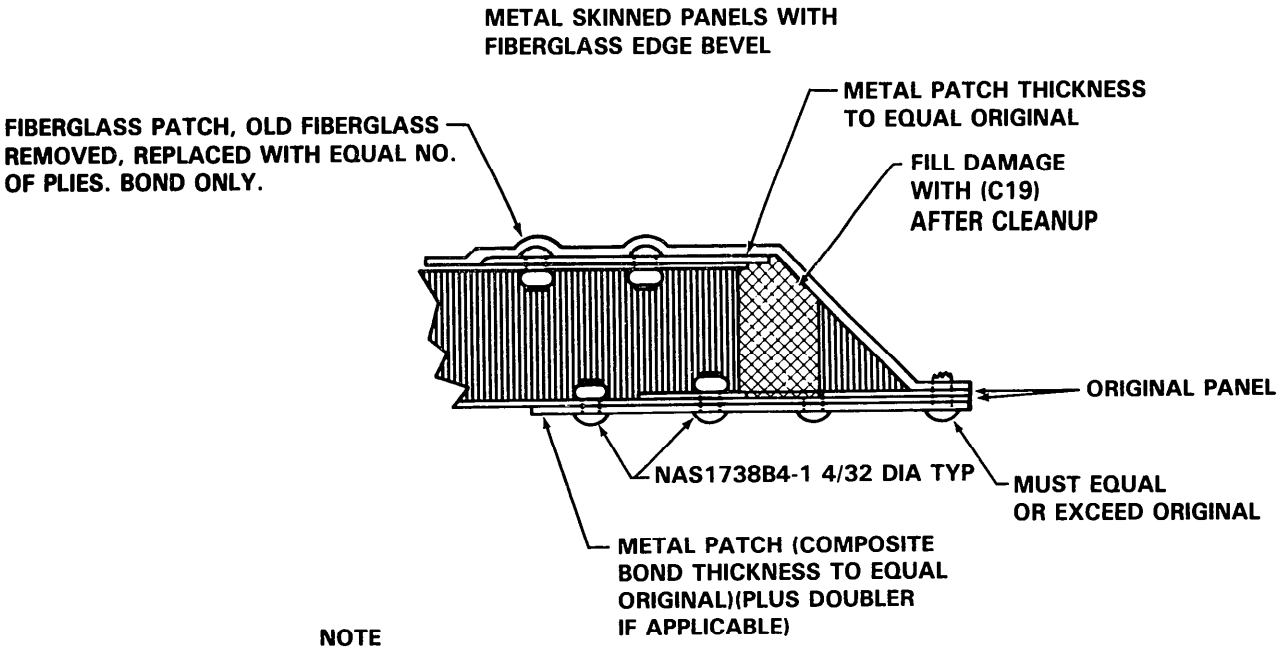

NOTE

Two-part adheisve (C19) should be used for making fiberglass wet layup repairs when a bond to metal is required. Exercise care to ensure that cloth is thoroughly impregnated.

EDGE REPAIR C

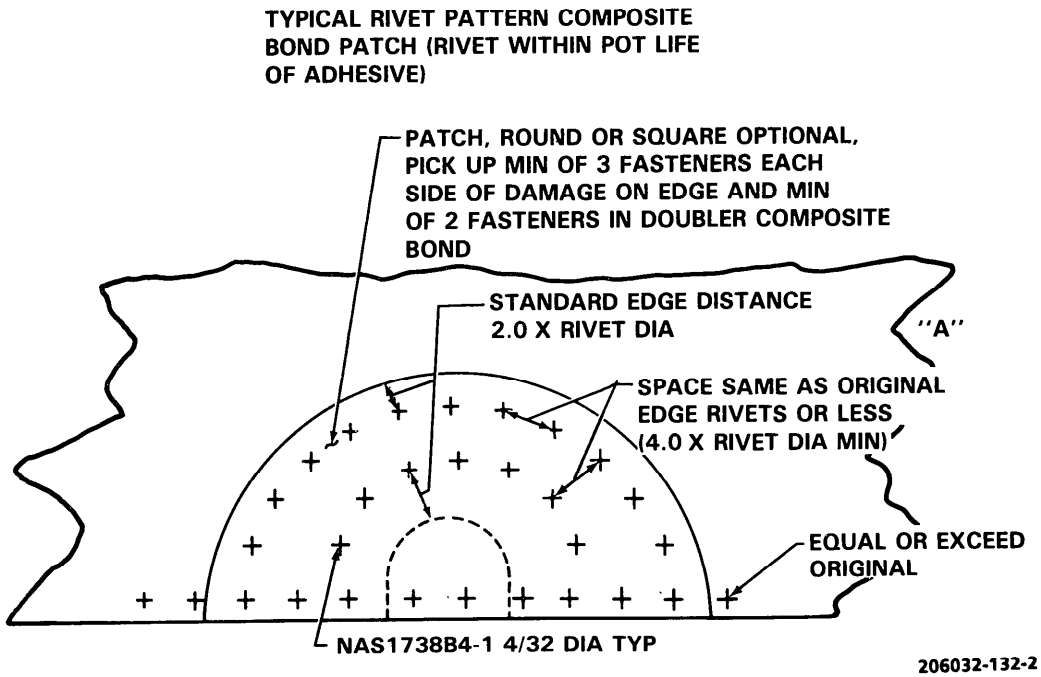

Figure 2-42. Honeycomb Panels — Edge Damage Repairs (Sheet 2 of 2)

d. Fill damaged area with adhesive (C19). Blend to undamaged surface and allow to cure.

e. Prepare patch layers of fabric to equal number of plies lost, provide a minimum of a **1.000** inch overlap outside the damaged skin trim, and to provide a minimum of **1.000** inch overlap over each preceding layer.

f. Saturate the first patch with epoxy resin (C66). Apply resin to the exposed core or filler and to the exposed clean area of the panel around the damage.

g. Fit the impregnated patch into place. Smooth out air pockets and wrinkles.

NOTE

Ensure that adequate resin is forced through the patch ply in the core area.

h. Saturate each succeeding ply with resin and brush coat the entire repair area with resin and apply the patch. Work each ply to remove the wrinkles and entrapped air prior to application of the next ply. Minimum number of plies to be the same as existing skin.

CAUTION

Use of a vacuum bag will remove resin from patch area unless adequate sealing is accomplished.

i. Cover repair with tedlar (C145) and apply firm contact pressure to the patch with shot bags, clamps, vacuum bag, or other suitable means.

2-191. HONEYCOMB PANEL MAJOR EDGE DAMAGE — LIMITS AND REPAIR. (AVIM)

2-192. LIMITATIONS — HONEYCOMB PANEL MAJOR EDGE DAMAGE (FIGURE 2-42).

a. The following extensive edge damage criteria applies when panel edge bevel skin is metal or when any metal skin or doubler has been damaged.

b. Damage does not extend more than **0.500** inch inside the inboard edge of the bevel (top) after cleanup.

c. Maximum length of damage shall not exceed **1.250** inches provided no more than two edge fasteners are affected after cleanup.

d. Maximum number of repairs not to exceed **2** per panel with a minimum of **2.000** inches between edges of cleanup.

NOTE

When damage exceeds the above limits, repairs may be accomplished only with approval and per instruction of qualified AMCOM engineering authority.

2-193. REPAIR — HONEYCOMB PANEL MAJOR EDGE DAMAGE (FIGURE 2-42).

a. Protect the opening to prevent entry of cleaning agents and solvents.

b. Remove paint and primer from an area extending **3.000** inches beyond the edge of damage.

CAUTION

Any core or skin contaminated by fuel, oil, water, corrosion or debris must be cut out.

c. Cut away edge skin and core to remove all damaged and contaminated material. Use a minimum of **0.500** inch radius at all corners of cleanup.

d. If damage is confined to one skin, the opposite skin may be left intact provided cleanup can be accomplished without damage to the opposite skin.

WARNING

Acetone is extremely flammable and toxic to eyes, skin, and respiratory tract. Wear protective gloves and goggles/face shield. Avoid repeated or prolonged contact. Use only in well-ventilated areas (or use approved respirator as determined by local safety/industrial hygiene personnel). Keep away from open flames, sparks, hot surfaces or other sources of ignition.

e. Clean cavity with acetone (C2). Dry immediately with clean, dry, compressed air.

f. Repair fiberglass skin as follows:

(1) Prepare patch layers of fabric, equal to number of plies removed, to provide a minimum of a **1.000** inch overlap outside the damaged skin trim and to provide a minimum of **1.000** inch overlap over each preceding layer.

(2) Saturate the first patch with epoxy (C66). Apply epoxy to the exposed core or filler and to the exposed clean area of the panel around the damage.

(3) Fit the impregnated patch into place. Smooth out air pockets and wrinkles.

NOTE

When fiberglass must be bonded to metal, use adhesive (C19). Exercise care to ensure that fiberglass is thoroughly impregnated.

(4) Saturate each succeeding ply with resin and brush coat the entire repair area with resin and apply the patch. Work each ply to remove the wrinkles and entrapped air prior to application of the next ply. Minimum number of plies to be the same as existing skin.

NOTE

Use of a vacuum bag will remove resin from patch area unless adequate sealing is accomplished.Use of a vacuum bag will remove resin from patch area unless adequate sealing is accomplished.

(5) Cover repair with tedlar (C145) and apply firm contact pressure to the patch with shot bags, clamps, vacuum bag, or other suitable means.

g. Metal skin repair is as follows:

NOTE

Metal skin patch must be prebond (composite bond) material. Type and thickness is to be the same as original. Where damage is sustained by the external edge doubler, the skin patch thickness must equal the skin and the doubler.

(1) Prepare a patch to extend **1.500** inches beyond edge of cleanup and to the edge of the panel.

NOTE

Where edge bevel skin is metal, the patch must be formed to conform to the edge bevel.

(2) Remove peel ply (composite bond protective cover) and apply adhesive (C19) to the patch (**0.020 to 0.030** inch thick).

(3) Install the patch and rivet in place. Use row of rivets through patch and skin only. Rivet spacing to be the same as panel attachment rivets with a minimum of 2D edge distance. Rivets must be installed within the pot life of the adhesive.

(4) Apply pressure to the patch in the cavity area to ensure a good bond.

2-194. INSERT REPLACEMENT. (AVIM)

Damaged inserts may be replaced per figure 2-43.

2-195. INSTALL RUBBER PAD BELOW FUEL RECEIVER.

a. The following procedure will prevent damage caused by the fuel cap. This preventive process should not be performed on damaged areas. Damage areas shall be repaired in accordance with applicable repair procedure in this chapter and TM 1-1500-204-23, prior to installing the protective rubber pad.

b. Use the center of the fuel receiver as a half way mark, measure **5.250** inches on both sides of the center point and form a **10.500** inch square. Mark outside border using masking tape (C143).

WARNING

Acetone is extremely flammable and toxic to eyes, skin, and respiratory tract. Wear protective gloves and goggles/face shield. Avoid repeated or prolonged contact. Use only in well-ventilated areas (or use approved respirator as determined by local safety/industrial hygiene personnel). Keep away from open flames, sparks, hot surfaces or other sources of ignition.

c. Sand area inside tape with sandpaper (C124) to scuff the surface. Wipe area with acetone (C2) and a clean chesecloth (C37).

d. Cut a 10-inch square pad (45, table 2-1) of rubber and cut one edge to the contour of fuel receiver retainer. Bevel all edges approximately **1/8** inch. Reference Appendix D, figure D-175.

e. Apply adhesive (C8) to the pad and affix to helicopter with contoured cut around fuel receiver retainer. Follow instructions provided on adhesive container for curing time.

f. After the pad is in place tape around the pad with masking tape (C143) leaving a **1/4** inch border. Apply sealing compound (C131) under all edges and along the outside edge of the rubber pad.

g. Remove tape and allow **6 to 8** hours to cure.

h. Restencil any partially covered markings IAW TM 55-1500-345-23.

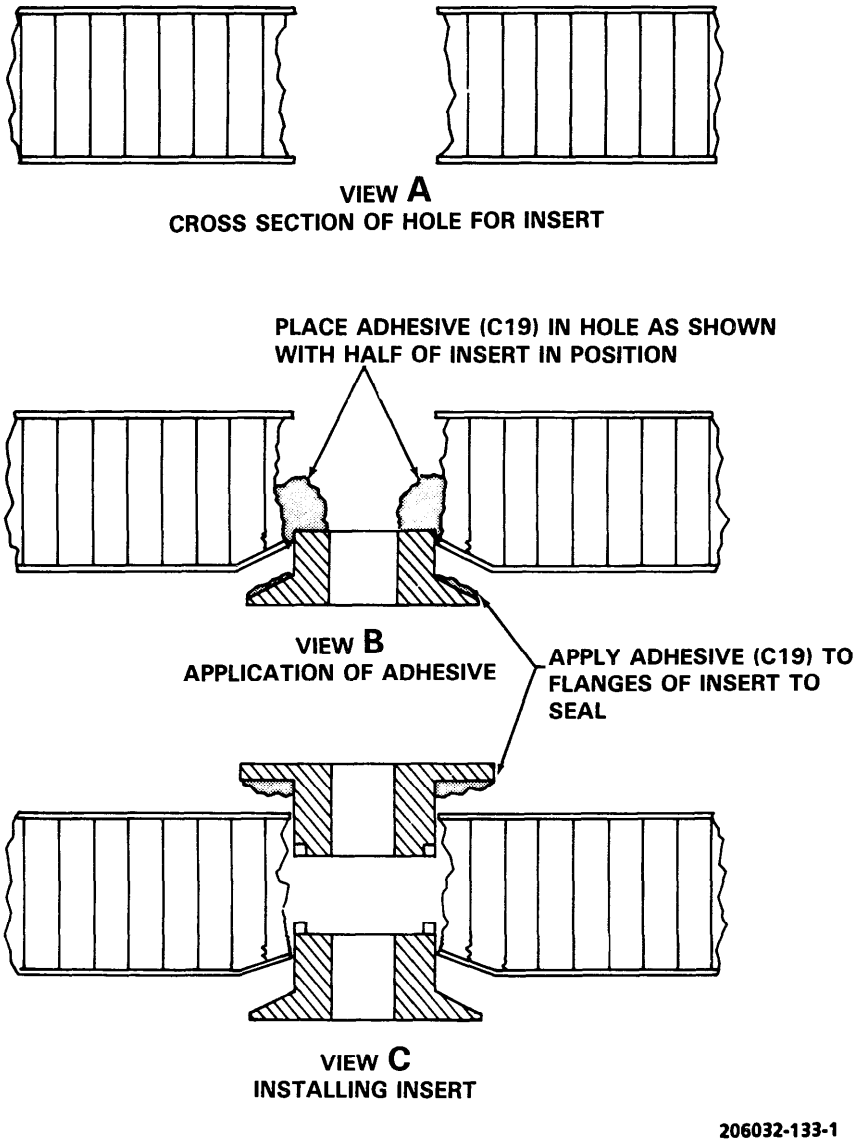

Figure 2-43. Honeycomb Panels — Installation of Inserts (Sheet 1 of 4)

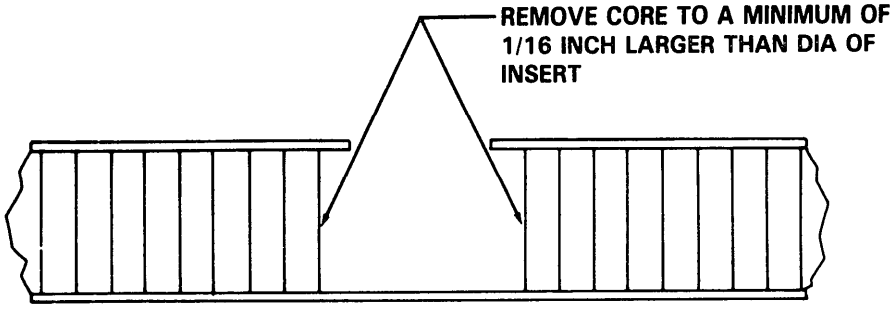

VIEW A
CROSS SECTION OF HOLE FOR INSERT

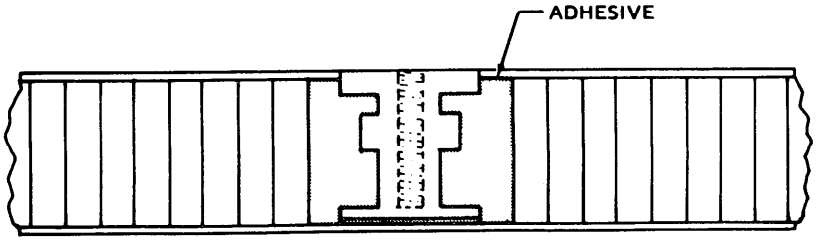

VIEW B
CROSS SECTION OF INSTALLED INSERT

206032-133-2

Figure 2-43. Honeycomb Panels — Installation of Inserts (Sheet 2 of 4)

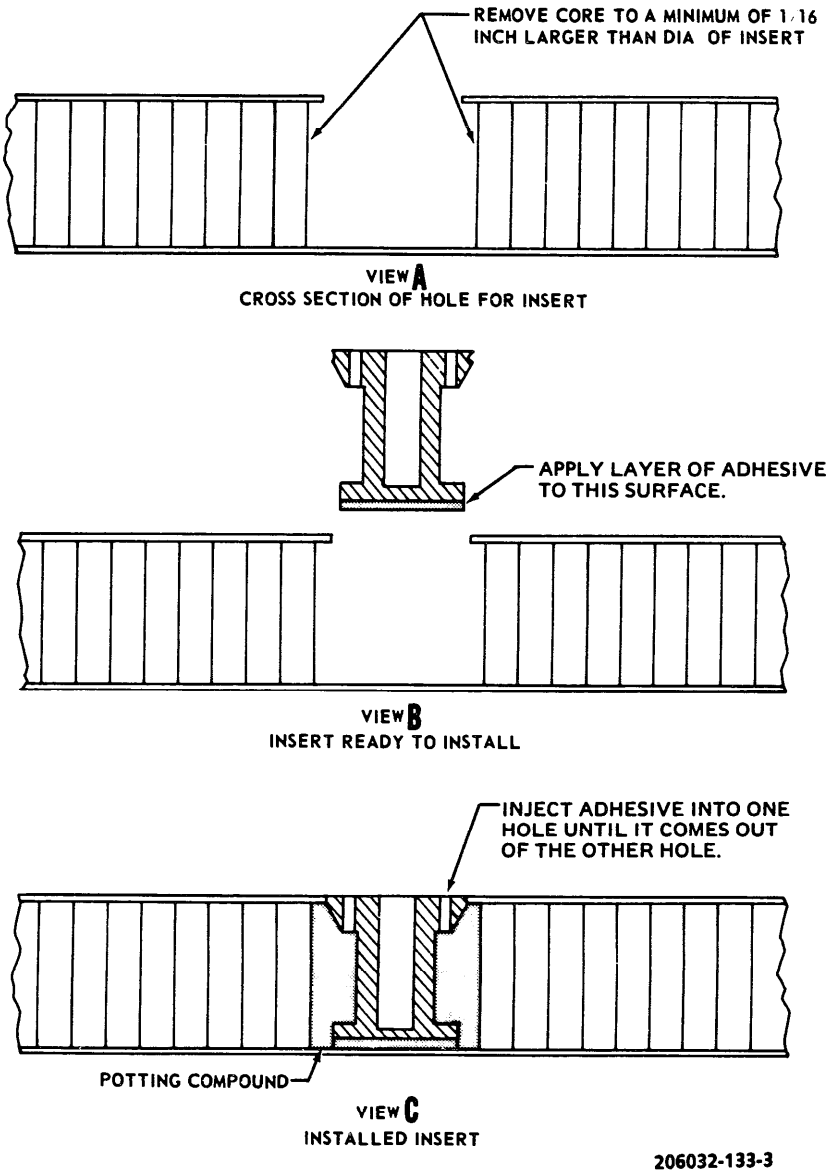

Figure 2-43. Honeycomb Panels — Installation of Inserts (Sheet 3 of 4)

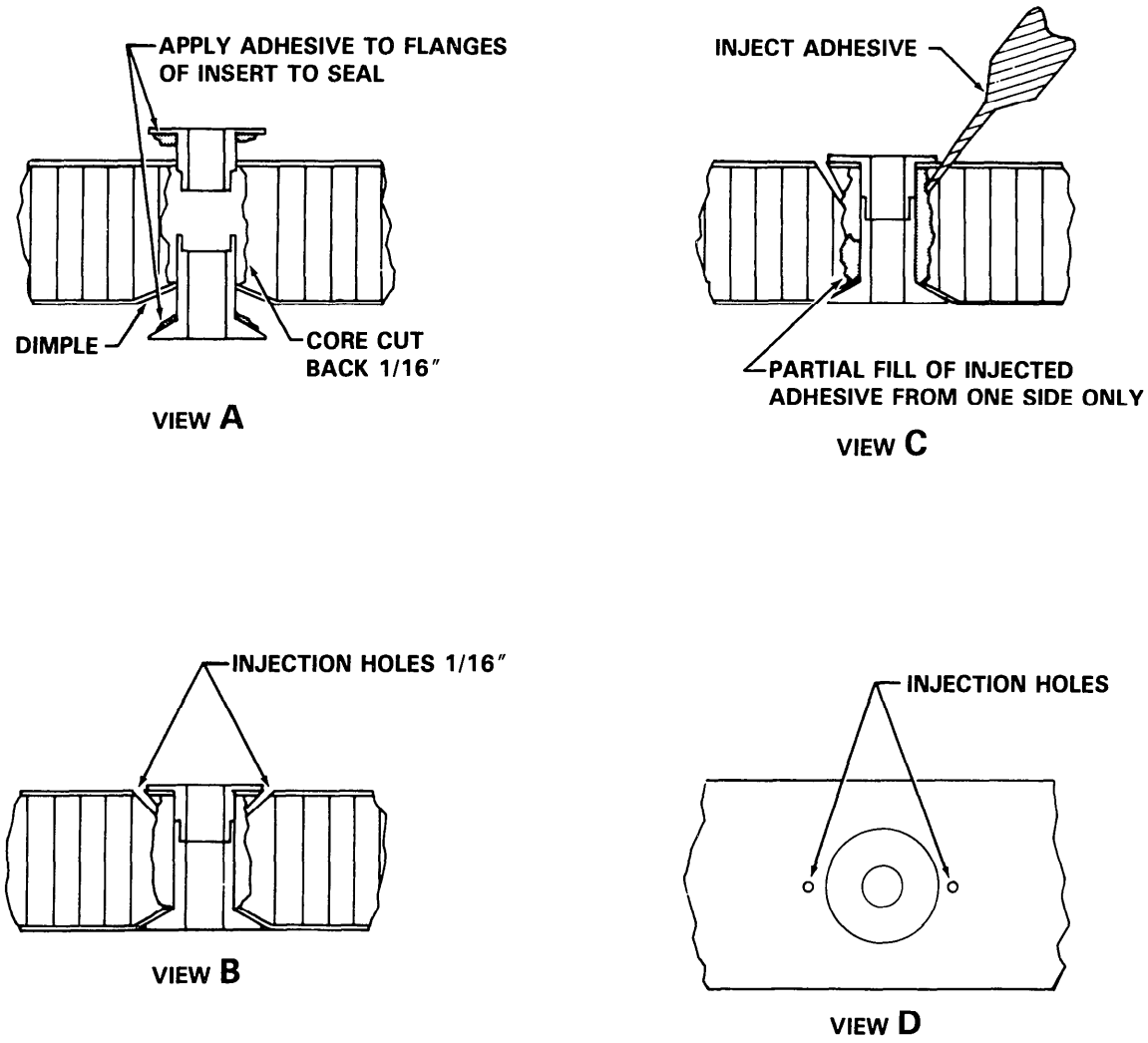

NOTE: All dimensions are in inches.

206032-133-4

Figure 2-43. Honeycomb Panels — Installation of Inserts (Sheet 4 of 4)

2-196. FUEL CELL SUPPORT. (AVIM) (FIGURE 2-44).

2-197. CLEANING - FUEL CELL SUPPORT.

WARNING

Aliphatic Naphtha is flammable and toxic. It can irritate and cause burns. Use only in well-ventilated area, away from heat or flame. Wear gloves and goggles. In case of contact, immediately flush skin or eyes with water for at least 15 minutes. Get medical attention for eyes.

Clean fuel cell supports with clean wiping rag dampened with aliphatic naphtha (C22).

2-197.1. INSPECTION - FUEL CELL SUPPORT. Inspect for dents, holes, rips, and voids between the supports and mark with soft lead pencil.

2-197.2. REPAIR - FUEL CELL SUPPORT.

a. Repair dents and holes less than **0.500** inch in diameter in fuel cell support as follows:

WARNING

Epoxy adhesive can cause severe burns to skin and eyes and may cause an allergic reaction to skin and respiratory reactions. Avoid inhalation. Thoroughly wash skin area with waterless hand cleaner followed by soap and water and immediately flush eyes with water for 15 minutes. In all cases get immediate medical attention. When working with epoxy adhesive, wear approved rubber gloves, chemical goggles, respirator with organic vapor cartridge, and protective clothing. Use in a well-ventilated area.

(1) Fill dents with adhesive (C12) and smooth surface to contour of surrounding area. Allow to cure 4 hours at **70° to 80°F (21.1° to 26.7°C)**.

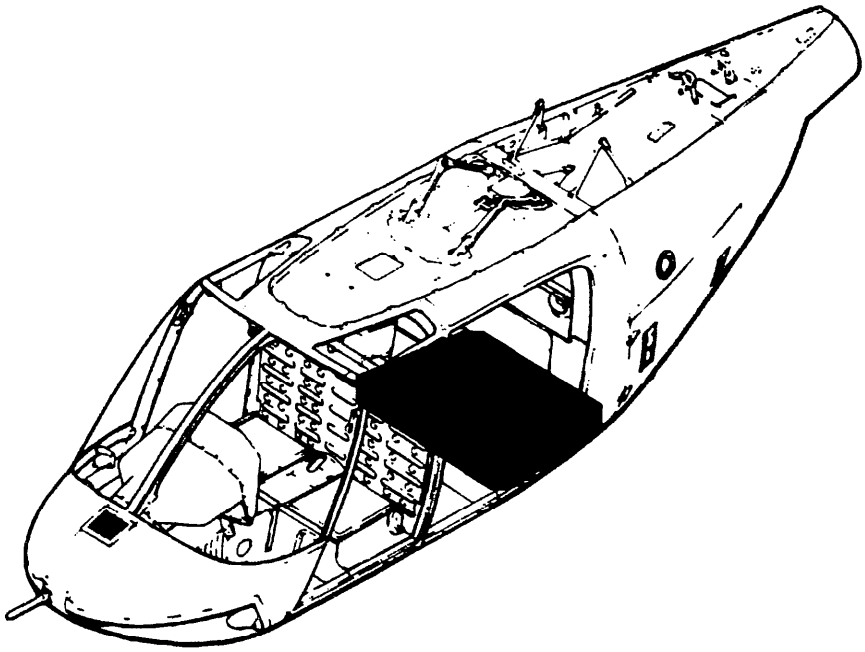

Figure 2-44. Fuel Cell Support

(2) Seal holes less than **0.500** inch diameter with adhesive (C12) and smooth surface to contour of surrounding area.

b. Repair dents and holes larger than **0.500** inch in diameter in fuel cell support while installed in helicopter as follows:

NOTE

A plug of common Styrofoam may be used as a suitable substitute, not to exceed 4.000 inches in diameter.

(1) Cut out damaged area and smooth edges of surrounding area.

WARNING

Abrading, machining, buffing, or grinding of epoxy resin may release fibers that are a health hazard if inhaled into the lungs. Work involving these operations shall be clone by keeping resin wet or by using air-exhausted workbench.

(2) Cut plug of nopcofoam (C107.1) and apply epoxy resin (C66) to bottom side and allow to cure before inserting.

(3) Apply epoxy resin (C66) to edges and insert plug and apply epoxy resin (C66) over top and surrounding area. Smooth to contour of surrounding area. Allow epoxy to cure **24** hours at **70° to 80°F (21.1° to 26.7°C)**.

NOTE

Coated foam fuel cell support may be cut at any place necessary to allow access to lower body shell. To replace removed section, follow applicable preceding steps according to size of pieces removed.

c. Repair fuel cell support defect as follows:

WARNING

Adhesive is flammable and toxic. It can irritate and cause burns. Use only in well-ventilated area, away from heat or open flame. Wear gloves and goggles. In case of contact, immediately flush skin or eyes with water for at least 15 minutes. Get immediate medical attention for eyes.

NOTE

Spray application of adhesive may be thinned with naphtha (C24.1).

(1) Apply three coats of adhesive (C15) to exposed foam or damaged area only. Allow adhesive to dry for 10 minutes between each coat and after final third coat.

WARNING

Aromatic naphtha is flammable and toxic. It can irritate and cause burns. Use only in well-ventilated areas, away from heat or open flame. Wear gloves and goggles. In case of contact, immediately flush skin or eyes with water for at least 15 minutes. Get medical attention for eyes.

(2) Remove excess adhesive with clean wiping rag dampened with aromatic naphtha (C24.1).

CAUTION

Prevent damage to airframe, use care when removing supports. Solvent shall not be use to remove supports. Fuel cell supports are bonded to airframe with sealing compound on underside four corners, periphery of sump cutout, and around openings of conduits. Any repair plugs previously installed in support(s) will be bonded to airframe.

d. Remove damaged fuel cell support from airframe with putty knife.

WARNING

Acetone is extremely flammable and toxic to eyes, skin, and respiratory tract. Wear protective gloves and goggles/face shield. Avoid repeated or prolonged contact. Use only in well-ventilated areas (or use approved respirator as determined by local safety/industrial hygiene personnel). Keep away from open flames, sparks, hot surfaces or other sources of ignition.

e. Remove old sealing compound from airframe with wiping rag dampened with acetone (C2).

WARNING

Sealing compound is flammable. Do not use near heat, open flames, or sparks. Overexposure can cause irritation of skin and eyes, headache, nausea, vomiting, and systemic problems. Thoroughly wash skin area with soap and water and immediately flush eyes with water for 15 minutes. In all cases get immediate medical attention. Wear approved protective gloves and goggles. Avoid breathing of vapors and prolong or repeated skin contact.

f. Apply sealing compound (C130) to underside of fuel cell support (1,2, 3, or 4) at four corners, on periphery of sump cutout and around openings of conduits.

g. Install support(s) to airframe. Remove excess sealing compound.

2-198. FIREWALL.

2-199. DESCRIPTION — FIREWALL. Firewalls constructed of titanium sheet (52, table 2-1) are provided at the forward and aft ends of the engine.

2-200. REPAIR — FIREWALL.

a. Repair firewall as follows:

(1) Smooth contour dents, nicks, and scratches that do not penetrate the firewall may be classified as negligible damage. Inspect with fluorescent penetrant type of inspection (ASTM-E-1417). Refer to TM 1-1520-254-23, Technical Manual Aviation Unit Maintenance (AVUM) and Aviation Intermediate Maintenance (AVIM) Manual Nondestructive Inspection Procedures for OH-58 Helicopter Series.

(2) Install repairs with monel rivets or standard close tolerance steel fasteners. Install gasket material (C25) between repairs to provide fire tight seal.

WARNING

Breathing asbestos fibers/dust can cause cancer and lung disease. Consult local industrial hygiene/safety representatives for specific asbestos operating procedures. Do not work with asbestos materials unless assigned protective equipment is worn. Avoid any work practice that will create dust. Use proper wetting procedures to keep dusting to a minimum

b. Replace asbestos chafing strips as follows:

(1) Remove strip and clean to bare metal.

WARNING

Acetone is extremely flammable and toxic to eyes, skin, and respiratory tract. Wear protective gloves and goggles/face shield. Avoid repeated or prolonged contact. Use only in well-ventilated areas (or use approved respirator as determined by local safety/industrial hygiene personnel). Keep away from open flames, sparks, hot surfaces or other sources of ignition.

(2) Clean metal with acetone (C2) and wipe dry with clean cloth.

WARNING

Acetone is extremely flammable and toxic to eyes, skin, and respiratory tract. Wear protective gloves and goggles/face shield. Avoid repeated or prolonged contact. Use only in well-ventilated areas (or use approved respirator as determined by local safety/industrial hygiene personnel). Keep away from open flames, sparks, hot surfaces or other sources of ignition.

(3) Clean strip with acetone (C2) and apply adhesive (C6) to strip and firewall. Allow adhesive to cure at **70° to 80°F (21.1° to 26.7°C)** for **24** hours or heat with a heat lamp for 1 hour at **120°F (48.7°C)**.

(4) Press strip to firewall and apply pressure until cured.

c. Repair silicone rubber seals on forward and aft firewalls. If seals are damaged or loose, rebond or replace as follows:

(1) Remove adhesive residue.

(2) Using 80 grit sandpaper (C123), roughen bonding surface of seal and firewall.

WARNING

Acetone is extremely flammable and toxic to eyes, skin, and respiratory tract. Wear protective gloves and goggles/face shield. Avoid repeated or prolonged contact. Use only in well-ventilated areas (or use approved respirator as determined by local safety/industrial hygiene personnel). Keep away from open flames, sparks, hot surfaces or other sources of ignition.

(3) Clean bonding surface of seal and firewall with cloth dampened with acetone (C2).

(4) Wipe dry with clean dry cloth.

(5) Brush a thin coat of adhesive (C33) on both surfaces.

(6) Press coated surfaces together. Maintain contact **24** hours to obtain handling strength. Maximum strength is obtained in **3 to 5 days.**

2-201. ENGINE PAN.

2-202. DESCRIPTION — ENGINE PAN. The engine pan and stiffeners are constructed of titanium sheet. It is a load bearing firewall and is located below the engine between stations 130 and 167.

2-203. DAMAGE CLASSIFICATION — ENGINE PAN.

a. Negligible damage.

(1) Nicks, corrosion, and scratch damage are limited to a cumulative total of **10%** of the pan thickness.

(2) Smooth dents that are not gouged and less than **0.025** inch in depth.

b. Reparable damage. Damage exceeding negligible damage limits shall be repaired using standard repair procedures for titanium, using monel rivets or close tolerance steel fasteners. Install gasket material (C25) between repairs to provide fire-tight seal.

2-204. AFT FUSELAGE ASSEMBLY.

2-205. DESCRIPTION — AFT FUSELAGE ASSEMBLY. The aft fuselage assembly provides the deck for the engine mount provision, attachment fittings for the tailboom and a compartment under the engine deck for electrical equipment.

2-206. INSPECTION — AFT FUSELAGE ASSEMBLY.

a. Remove inspection plate on right side of fuselage at tailboom attaching point.

b. Inspect aft fuselage attachment fittings for loose rivets, nicks, scratches, cracks, corrosion or pitting. Nicks and scratches in excess of **0.002** inch depth require repair. All cracks and corrosion damage require repair. If crack in aft fuselage fitting is suspected, refer to TM 1-1520-254-23, Technical Manual Aviation Unit Maintenance (AVUM) and Aviation Intermediate Maintenance (AVIM) Manual Nondestructive Inspection Procedures for OH-58 Helicopter Series.

c. Inspect aft fuselage fairing visually for cracking. All cracks must be repaired. If crack in aft fuselage fairing is suspected, refer to TM 1-1520-254-23, Technical Manual Aviation Unit Maintenance (AVUM) and Aviation Intermediate Maintenance (AVIM) Manual Nondestructive Inspection Procedures for OH-58 Helicopter Series.

d. Inspect section assembly skin for cuts, tears, cracking, wrinkling, and loose or missing rivets. If crack in section assembly skin is suspected, refer to TM 1-1520-254-23, Technical Manual Aviation Unit Maintenance (AVUM) and Aviation Intermediate Maintenance (AVIM) Manual Nondestructive Inspection Procedures for OH-58 Helicopter Series.

NOTE

Some wrinkling on either side of helicopter below WL 61.76 is permitted unless wrinkles cross a rivet pattern. Wrinkling above WL 61.76 which cross rivet patterns, or which are characterized by permanent creasing and abrupt changes in profile require higher level maintenance.

e. Inspect stiffeners for security of attachment and straightness by looking through avionics compartment door.

2-207. REPAIR — AFT FUSELAGE ASSEMBLY. (AVIM)

a. Refer to figure 2-36 and TM 1-1500-204-23 for repair of aft fuselage fairing.

b. Refer to TM 1-1500-204-23 for repair of aft section assembly skin and repair of stiffeners.

c. For repair of aft fuselage tailboom attachment fittings proceed as follows:

(1) Remove access door from right side of fuselage just forward of tailboom attachment point to gain access to fittings.

WARNING

Acetone is extremely flammable and toxic to eyes, skin, and respiratory tract. Wear protective gloves and goggles/face shield. Avoid repeated or prolonged contact. Use only in well-ventilated areas (or use approved respirator as determined by local safety/industrial hygiene personnel). Keep away from open flames, sparks, hot surfaces or other sources of ignition.

(2) If corrosion or mechanical damage resulting from screwdrivers, wrenches, over-length door screws, etc., is evident, remove paint from fittings using acetone (C2).

(3) Remove corrosion and inspect fittings for pitting. Pitting in excess of **0.002** inch must be dressed out.

(4) Clean up nicks and scratches.

(5) Repair limits for corrosion or mechanical damage are as follows (if limits are exceeded, retrograde helicopter in the usual manner):

(a) Minimum wall (web) thickness after cleanup is **0.100** inch.

WARNING

There must be no abrupt changes in profile or sharp edges after cleanup.

(b) A maximum of **0.050** inch may be removed from upper edges of lower fittings (check DA Form 2408-15, Historical Record for Aircraft) including large area closest to bulkhead. No feathered edges are permitted; if previous repair did not exceed the **0.050** inch repair criteria, fitting can be repaired to **0.050** inch. If **0.050** inch is exceeded, replace fitting.

NOTE

Ensure adequate edge distance between forward rivets and edge of fitting after cleanup.

(c) If it is necessary to clean up thick portion of fitting near corner joint, minimum wall thickness of fitting at midpoint of corner radius is **0.120** inch after cleanup (figure 2-45).

NOTE

Inside corner radius where walls intersect aft section of fitting should be approximately 0.090 inch (figure 2-45).

(d) Small nicks, scratches, etc., in upper left hand longeron and fitting not to exceed **0.005** inch deep may be blended out and repainted. Damage to upper right hand longeron and fitting may be blended out and repainted provided depth does not exceed **0.010** inch. Damage to upper right hand angle (stringer) directly behind tailboom inspection panel plate nuts may be blended out and repainted provided damage does not exceed **0.015** inch deep. Rivets in upper longeron having head damage in excess of **0.035** inch depth must be replaced.

(6) Record repair of mechanical or corrosion damage on DA Form 2408-15, Historical Record for Aircraft. Include an estimate of edge thickness removed.

(7) Fittings must be repainted after removal of corrosion products and cleanup.

2-207.1. LEFT AND RIGHT HAND PYLON SUPPORT STRAPS (AVIM).

2-207.2. REMOVE — LEFT AND RIGHT HAND PYLON SUPPORT STRAPS.

a. Remove equipment from avionics bay as required.

NOTE

Protect all areas adjacent to and below the repair area from FOD.

b. Procedure is the same for Left and Right Hand Aft Straps, part number 206-032-200-27 and 206-032-200-28.

c. Remove fasteners, if non-standard fasteners are present, remove as required IAW TM 1-1500-204-23-10. Remove the damaged strap.

d. Inspect the area under the strap for damage using appropriate NDI procedures, IAW TM 1-1520-266-23 and TM 1-1500-335-23. Contact AMRDEC if damage is found.

2-207.3. INSTALL — LEFT AND RIGHT HAND PYLON SUPPORT STRAPS.

NOTE

Slight straightening of the strap will occur during heat treatment, this must be compensated for during forming.

a. Manufacture replacement strap from 0.090-inch 7075-O condition AL, form to aircraft in the annealed condition, and then heat treat to T6 temper IAW TM 1-1500-204-23-10. Completed strap must be free of nicks, gouges, saw marks, and other similar defects.

b. Strap shall be shimmed as required (any gap in excess of 0.015 inch and less than 0.060 inch). Shim material shall be solid 2024-T3. Corner of beam shall be relieved as required to prevent sharp edge of beam from bearing into radius of strap.

c. Drill replacement strap to match existing holes. Ensure the proper edge distance is maintained. Debur, apply chemical conversion coating (C-40), and two coats of MIL-P-23377 epoxy polyamide primer (C-116).

NOTE

Use HL20PB pin and HL86W collar, and MS90354 blind huck bolts. Rivet length and size depends on hole and edge distance requirements. Standard over sizing procedures apply IAW TM 1-1500-204-23-10.

d. Install strap to the transmission support using Hi-Locs (4 places) and blind huck bolts for the remainder of the installation. All fasteners are to be installed wet with MIL-P-23377 epoxy polyamide primer (C-116). Touch up paint as required IAW TM 55-1500-345-23.

WARNING

All bucktails shall be removed as interference with flight controls may occur.

e. Ensure all FOD is removed.

f. Reassemble aircraft.

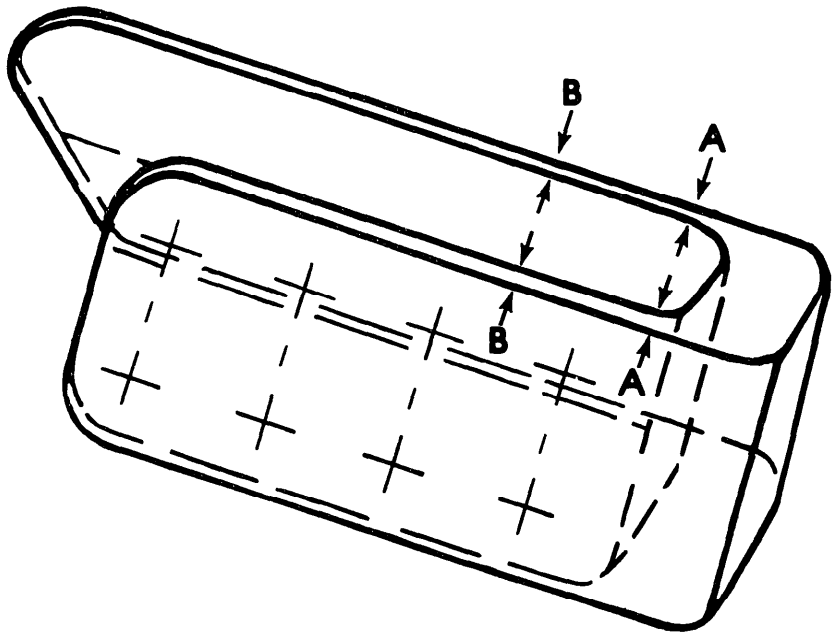

AREA A–Minimum Wall Thickness 0.120 AREA B–Minimum Wall Thickness 0.090

206032-135

Figure 2-45. Tailboom Attachment Fitting Repair

2-208. BALLAST INSTALLATION. (FIGURE 2-1.)

2-209. DESCRIPTION — BALLAST INSTALLATION. Two ballast installations are provided for weight and balance applications. The forward location is fuselage station 30.60, which is forward of the instrument panel. The aft location is the aft end of the tailboom, boom station 182.41.

2-210. INSPECTION — BALLAST INSTALLATION. Inspect ballast installation for security.

2-211. REMOVAL — FORWARD BALLAST. A

a. Remove APX-72 transponder from mount.

b. Remove four screws securing APX-72 mount and ballast to shelf.

c. Remove ballast as required to facilitate maintenance.

2-212. REMOVAL — FORWARD BALLAST. C

a. Remove four screws securing ballast to shelf.

b. Remove ballast as required to facilitate maintenance.

2-213. INSTALLATION — FORWARD BALLAST. A

a. Reinstall APX-72 mount and ballast with four screws. A maximum of **15** pounds of ballast may be used.

b. Install APX-72 transponder in mount.

2-214. INSTALLATION — FORWARD BALLAST. C Reinstall ballast with four screws.

2-215. REMOVAL — AFT BALLAST.

a. Remove four bolts, twelve washers, and four nuts securing ballast to tailboom.

b. Remove ballast as required to facilitate maintenance.

2-216. INSTALLATION — AFT BALLAST. Reinstall aft ballast on tailboom with four bolts, twelve washers, and four nuts. A maximum of **10** pounds of ballast may be used.

2-217. FITTING ASSEMBLY - ARMAMENT (HARD POINTS).

2-218. DESCRIPTION — FITTING ASSEMBLY — ARMAMENT (HARD POINTS). Armament hard points are those structural load bearing points used for attachment of armament system. Refer to figure 16-1 A .

2-219. INSPECTION — FITTING ASSEMBLY — ARMAMENT (HARD POINTS). A Visually inspect all hard points for evidence of physical damage, wear, cracks, and corrosion. If crack is suspected, refer to TM 1-1520-254-23, Technical Manual Aviation Unit Maintenance (AVUM) and Aviation Intermediate Maintenance (AVIM) Manual Nondestructive Inspection Procedures for OH-58 Helicopter Series.

2-220. REMOVAL — FITTING ASSEMBLY — ARMAMENT (HARD POINTS). A

a. Remove fitting (detail A, figure 16-1) from seat hardpan by removing six screws and six washers.

b. Remove fitting (detail B) from seat hardpan by removing four bolts and four washers.

c. Remove fitting (detail D) from centerpost by removing three screws and three washers.

NOTE

Do not remove or disturb shims on centerpost. They are a permanent production installation.

d. Remove fitting (detail C) from seat back panel by removing three screws and three washers.

e. Remove stop assembly (detail E) from seat hardpan by removing three screws and three washers.

2-221. REPAIR OR REPLACEMENT — FITTING ASSEMBLY — ARMAMENT (HARD POINTS). Repair is limited to replacement of any part that fails inspection. Refer to TM 43-0105 for corrosion removal. A

2-222. INSTALLATION — FITTING ASSEMBLY — ARMAMENT (HARD POINTS). A

NOTE

Remove passenger seat cushion only. Helicopter may be equipped with either full length or two piece seat and seatback cushions. If two piece seat and seatback cushions are installed only the left side cushions need to be removed to install gun. Refer to paragraph 2-92.

a. Install fitting (detail A, figure 16-1) to inserts near center of seat hardpan with six screws and six washers.

b. Install fitting (detail B) to inserts on left side of seat hardpan with four bolts and four washers.

c. Install fitting (detail D) to inserts on left side of centerpost with three screws and three washers.

NOTE

Soundproofing blanket has tear away flaps to facilitate installation of fittings (details C and D) without removal of blanket.

d. Install fitting (detail C) on seatback shelf with three screws and three washers.

CAUTION

Failure to install the following stop can result in damage to the helicopter when gun is depressed.

e. Install stop assembly (detail E) to insert on seat hardpan with three screws and three washers.

2-223. DRAIN INSTALLATION.

2-224. DESCRIPTION — DRAIN INSTALLATION. The aft fuselage drain installation consists of metal tube

assemblies attached to drip pan assembly and routed to exterior of helicopter. A flexible rubber hose attached at end of metal tube serves as a grommet through fuselage skin opening.

2-225. TUBE ASSEMBLY (METAL).

2-226. DESCRIPTION — TUBE ASSEMBLY (METAL). Refer to paragraph 2-224.

2-227. INSPECTION — TUBE ASSEMBLY (METAL). Inspect tubing for dents, kinks, and deep scratches.

2-228. REMOVAL — TUBE ASSEMBLY (METAL). Disconnect tube assembly from drip pan, remove attaching clamp, and remove tube from helicopter.

2-229. REPAIR — TUBE ASSEMBLY (METAL). Replace tubing having dents, kinks, or twisted areas.

2-230. INSTALLATION — TUBE ASSEMBLY (METAL).

a. Position tube assembly to drip pan assembly and tighten fittings. Ensure that end fittings are held to prevent kinking or twisting of tube assembly when installing.

b. Install attaching clamp.

2-231. TUBE ASSEMBLY (FLEXIBLE).

2-232. DESCRIPTION — TUBE ASSEMBLY (FLEXIBLE). Refer to paragraph 2-224.

2-233. INSPECTION — TUBE ASSEMBLY (FLEXIBLE). Inspect rubber tube for cuts and general deterioration.

2-234. REMOVAL — TUBE ASSEMBLY (FLEXIBLE). Pull off rubber tube from open end of metal drain tube protruding through fuselage skin opening.

2-235. REPAIR — TUBE ASSEMBLY (FLEXIBLE). Replace tube not meeting inspection.

2-236. INSTALLATION — TUBE ASSEMBLY (FLEXIBLE). Install rubber tube on metal tube end and position properly through fuselage skin opening.

2-237. AVIONICS COMPARTMENT FLOOR.

2-238. DESCRIPTION — AVIONICS COMPARTMENT FLOOR. The floor panel is installed in the aft fuselage between stations 130.0 and 167.0. Panel construction is aluminum alloy honeycomb core with aluminum facings and one ply fiberglass edging. The floor panel has provisions for battery tiedowns and installation of electrical and flight instrument components. Refer to figure O-1 for station location.

2-239. INSPECTION — AVIONICS COMPARTMENT FLOOR. Inspect honeycomb panel for dents, cracks, voids, punctures, delamination, and/or other damage. If damage to panel is suspected, refer to TM 1-1520-254-23, Technical Manual Aviation Unit Maintenance (AVUM) and Aviation Intermediate Maintenance (AVIM) Manual Nondestructive Inspection Procedures for OH-58 Helicopter Series.

CAUTION

When removing rivets from panel, care must be taken to preclude driving rivet stems into lower aft fuselage panel (figure 2-36).

NOTE

The weight of the transmission and engine should be removed from the airframe, or the fuselage should be supported prior to removal/replacement of avionics compartment floor.

2-240. REMOVAL — AVIONICS COMPARTMENT FLOOR. If repair is impractical and the panel must be removed, remove the door, electronics equipment and battery, and then drill out rivets attaching panel to bulkheads and longerons, etc.

2-241. REPAIR — AVIONICS COMPARTMENT FLOOR. If the contaminated area can be isolated and removed, the panel may be repaired by insertion methods described in paragraph 2-174.

2-242. INSTALLATION — AVIONICS COMPARTMENT FLOOR. Avionics compartment floor panel may be installed using blind rivets throughout, or the lower skin on each side of the airframe must be loosened sufficiently to gain access for bucking. However, blind rivets must be utilized in any event along station 167 due to inaccessibility for bucking rivets. (Refer to TM 1-1500-204-23.) After panel has been installed, install battery, electronics gear, and attaching components, then reinstall the door.

SECTION II TAILBOOM

2-243. TAILBOOM.

2-244. DESCRIPTION — TAILBOOM. The tailboom is a basic monocoque structure which means it has no longitudinal skin stiffeners or longerons. The tailboom skin is considered primary structure with the exception of the first 10 inches from its attaching point where the loads are redistributed by means of four intercostal load carrying members. The tailboom is attached to the fuselage by four bolts. The tailboom supports the tail rotor driveshaft, tail rotor gearbox, tail rotor assembly, vertical, and horizontal stabilizers. Helicopters with MWO 55-1520-228-30-24 accomplished have an aluminum alloy, one-piece, non-hinged, tail rotor driveshaft cover. Helicopters with MWO 55-1520-228-50-25 accomplished have an aluminum alloy, two-piece, hinged, tail rotor driveshaft cover.

2-245. INSPECTION — TAILBOOM.

NOTE

Manufacturing irregularities and skin distortions which are aft of the horizontal stabilizer, excluding dents and creases. will be considered insignificant provided the irregularities do no exceed 0.090 inch depth when measured with a straight edge and standoff, and providing the change in profile is gradual.

Manufacturing irregularities and skin distortions which are forward of the horizontal stabilizer, excluding dents and creases, will be considered insignificant provided the irregularities do not exceed 0.060 inch depth when measured with a straight edge and standoff, and also providing the change in profile is gradual.

a. Inspect the entire tailboom for localized buckling and bending.

(1) Inspect driveshaft cover (if installed). Refer to paragraph 2-255.

(2) Open or remove driveshaft cover (if installed).

b. Inspect for scratches and creases. Any scratch or crease which obviously exceeds the thickness of the paint will be inspected using a 5 power magnifying glass and/or dye-penetrant.

NOTE

Scratches not in excess of 0.005 inch depth and at angles greater than 45 degrees from the longitudinal axis of the tailboom may be blended out provided they do not exceed one-sixth the circumference of the tailboom, and provided they are not also accompanied by creasing. Scratches not in excess of 0.010 inch depth and at angles less than 45 degrees from the longitudinal axis may also be blended out. No limit on length or number of longitudinal scratches provided damage is not clustered.

c. Visually inspect the entire tailboom for large dents or creases. Any dent or crease which obviously causes misalignment of the tailboom or driveshaft is nonreparable except at depot level of maintenance. A tailboom with these deficiencies will be replaced.

d. Inspect the entire tailboom for reparable dents. Not more than two smooth dents per bulkhead section, neither dent exceeding **1.000** inch in diameter, separated by at least 90 degrees but not more than 120 degrees about the circumference of the tailboom will be permitted. Other damage must be repaired. (Only minor dimpling and peening is permitted forward of horizontal stabilizer to tailboom station 42.59.)

NOTE

In general there are no limitations to the number of minor dimples or peenings provided this damage is not clustered. Dimpling or peening is any dent 0.125 to 0.250 inch in diameter, which does not tear or significantly scratch the skin.

e. Inspect the entire tailboom assembly for loose or missing rivets. Loose or missing rivets must be replaced.

f. Inspect the entire tailboom for cracks, especially the area around the tailrotor driveshaft

hanger bearing brackets and the tail rotor gearbox mounting pad. Cracks must be repaired. If crack in tailboom is suspected, refer to TM 1-1520-254-23, Technical Manual Aviation Unit Maintenance (AVUM) and Aviation Intermediate Maintenance (AVIM) Manual Nondestructive Inspection Procedures for OH-58 Helicopter Series.

WARNING

Punctures and bullet holes must be repaired prior to the next flight.

g. Inspect the tailboom for punctures, bullet holes, etc.

h. Inspect the area around the 90 degree gearbox for corrosion. Corrosion must be removed and area repainted. Refer to TM 43-0105 for repairs.

i. Inspect tailboom repairs for buckling between rivets. Inspect patches for creasing and cracks. Inspect for missing or loose rivets. If crack in patch is suspected, refer to TM 1-1520-254-23, Technical Manual Aviation Unit Maintenance (AVUM) and Aviation Intermediate Maintenance (AVIM) Manual Nondestructive Inspection Procedures for OH-58 Helicopter Series.

j. Inspect the tailboom for skin crinkling, i.e., localized buckling of the skin with sharp changes in profile. This usually involves skin rippling or wrinkle overlap.

NOTE

If major buckling or crinkling occurs at any tailboom station as the result of a hard landing or pylon induced vibrations, and is not a result of an external strike, the tailboom, less serviceable items, will be suspected of overstress and replaced.

k. Inspect the tail rotor hanger bearing support brackets for cracks and bends. A bent bracket may be straightened by finger pressure. There are no repairs permitted. Elongation of holes in excess of **0.270** inch diameter requires replacement. If crack in tail rotor hangar bearing is suspected, refer to TM 1-1520-254-23, Technical Manual Aviation Unit Maintenance (AVUM) and Aviation Intermediate Maintenance (AVIM) Manual Nondestructive Inspection Procedures for OH-58 Helicopter Series.

l. If installed, inspect access cover (6, figure 2-48 or 7, figure 2-49) and adjacent skin for creasing, cracks, or dents. If damaged, remove cover and inspect bulkheads and web for damage.

2-246. TORQUE REQUIREMENT — TAILBOOM.

a. Remove inspection plate on right side of fuselage at tailboom attaching point.

b. Torque four tailboom attaching bolts **375 TO 415 INCH-POUNDS** after maintenance test flight and after **100** hours of flight following tailboom installation. Repaint (C132) slippage marks.

c. Install inspection plate with screws. Maximum screw length, excluding head, must not exceed **0.376** inches.

2-247. DAMAGE LIMITS — TAILBOOM.

CAUTION

The tailboom must be replaced if damage is extensive enough that tailboom misalignment is suspected.

a. Damage which does not exceed **10%** of tailboom circumference in height and **30%** of tailboom circumference in length may be repaired by patching. (Circumference to be measured at aft end of damage.)

b. A maximum of **two** damaged areas per stress section of the tailboom is permitted. Example: A line drawn around the circumference of the tailboom must not touch more than **two** damaged areas.

c. Damaged areas must be a minimum of **8.000** inches apart.

d. Total damage to the tailboom is not to exceed **5%** of the tailboom area (approximately **160**square inches).

e. If damage is located forward of tailboom station 43.00, between tailboom station 78.00 and 99.00 or aft of tailboom station 172.00, determine if bulkheads, supports, fittings, etc., have sustained damage. Damage to these parts is cause for tailboom replacement. Refer to figure 2-47.

f. If installed, access cover (6, figure 2-48 or 7, figure 2-49) — Damage Limits. Cover is acceptable without repair if the following damage limits are not exceeded:

(1) Dents are not sharp.

(2) Skin is not gouged.

(3) Not more than one dent per station plane.

(4) Dents no closer than **2.000** inches to one another or edge.

(5) Dents no deeper than **0.020** inch.

g. Bulkheads, web, and tailboom skin adjacent to access cover — Damage Limits.

(1) Bulkheads. No damage allowed.

(2) Web. No damage allowed in web within **1.000** inch of a bulkhead, external skin, or cover.

(3) No damage allowed above the web in tailboom skin.

2-248. REMOVAL — TAILBOOM. C

CAUTION

Use care not to damage VOR antenna (7, figure 2-48 or 8, figure 2-49) while removing tailboom. Supports shall be placed so they will not contact antenna. Antenna shall not be used as handhold.

NOTE

The tailboom may be supported by placing one support under the forward position and one support under the aft end immediately forward of the vertical stabilizer. Refer to figure 2-46.

a. Remove vertical fin if required. Refer to paragraph 2-267.

b. Remove inspection panel (13, figure 2-1 A , figure 2-2. C) from right side of fuselage just forward of tailboom attachment point. Remove aft engine fairing. Refer to paragraph 2-65.

c. If installed, remove tail rotor driveshaft cover (4, figure 2-48 or 4 and 5, figure 2-49). Refer to paragraph 2-254.

d. Disconnect and tag tailboom electrical antenna and electrical leads.

NOTE

Mark antenna leads to assist in proper installation.

e. Disconnect tail rotor pitch change tube.

f. Disconnect tail rotor driveshaft just forward of tailboom attachment point (paragraph 6-155). On helicopters with MWO 55-1520-228-50-25 accomplished, refer to paragraph 6-170.

CAUTION

Tailboom may rotate to the right if vertical fin is not removed.

g. Disconnect the tailboom and remove nuts (6) and washers (4) from four attaching bolts (1, 2, 3). With a plastic mallet, carefully drive the four bolts out and separate tailboom from aft fuselage. Refer to figure 2-46.

h. If tailboom is to be replaced, remove all serviceable components from existing tailboom for reinstallation.

2-249. REPAIR — TAILBOOM.

NOTE

Tailboom repair is limited to patching of minor damage. All repairs must be in accordance with accepted sheet metal practices. Refer to TM 1-1500-204-23.

NOTE

Ensure tailboom skin repairs do not interfere with fit of tail rotor driveshaft cover (4, figure 2-48 or 4 and 5, figure 2-49) if installed.

a. Accomplish minor skin damage repairs as follows:

(1) Clean up damaged skin using a minimum **0.125** inch radius.

(2) Prepare a patch of aluminum alloy sheet (27, table 2-1) and shape to contour of tailboom. The patch must extend a minimum of **3.000** inches forward, **3.000** inches aft, **1.000** inch below and **1.000** inch above the damaged area.

(3) Prepare patch and tailboom skin for bonding as follows:

WARNING

Acetone is extremely flammable and toxic to eyes, skin, and respiratory tract. Wear protective gloves and goggles/face shield. Avoid repeated or prolonged contact. Use only in well-ventilated areas (or use approved respirator as determined by local safety/industrial hygiene personnel). Keep away from open flames, sparks, hot surfaces or other sources of ignition.

(a) Clean areas to be bonded with acetone (C2).

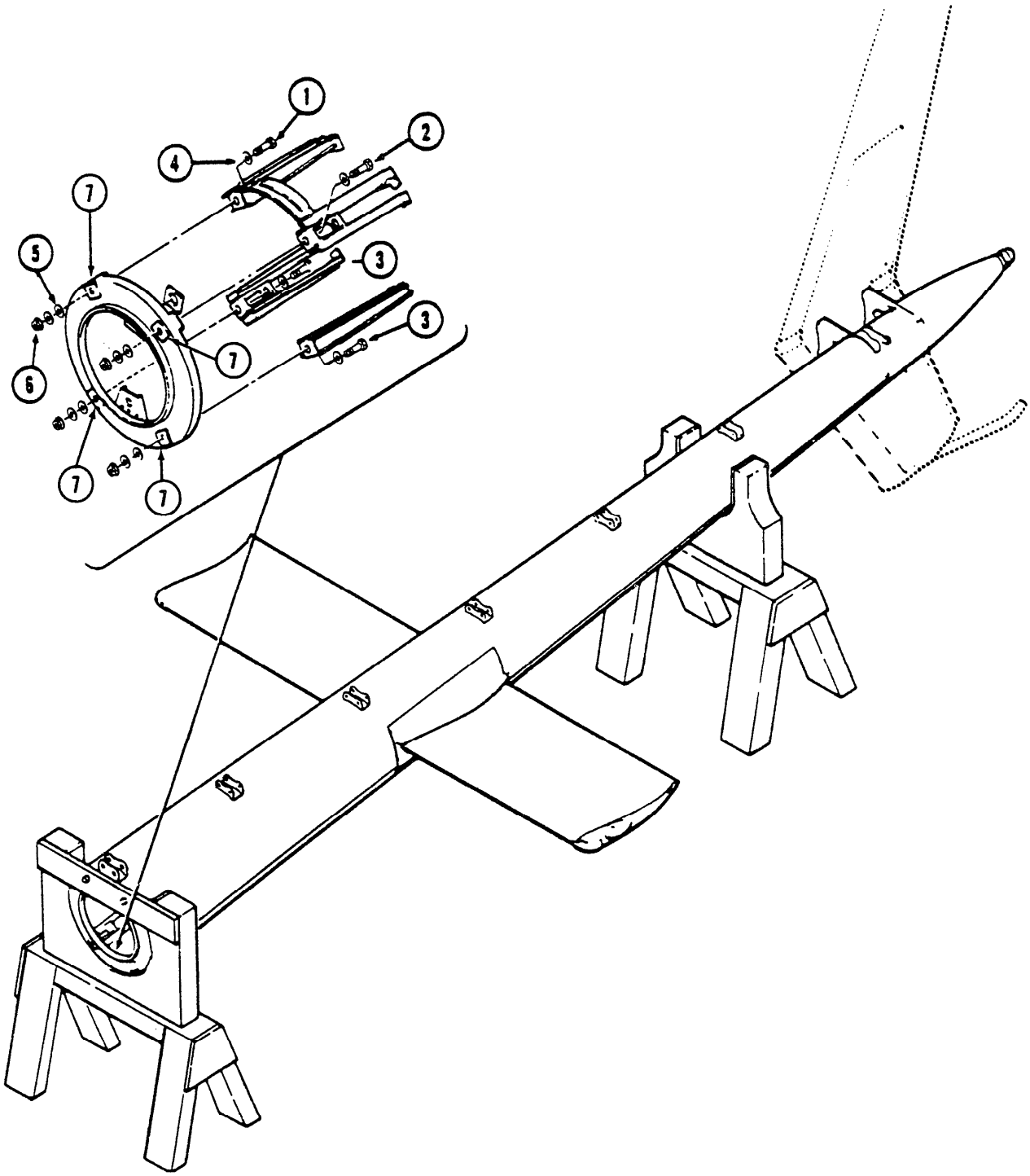

1. Bolt, NAS626-23 (Head Aft)
2. Bolt, NAS626-26 (Head Aft)
3. Bolt, NAS626-20 (Head Aft)
4. Washer, (Under bolt heads with csk toward bolt heads)
5. Washer, as required between fittings and nut so that not less than one thread and not more than three threads are showing. Torque 375 TO 415 INCH-POUNDS.
6. Nut
7. Shim

Figure 2-46. Tailboom Removal/Installation

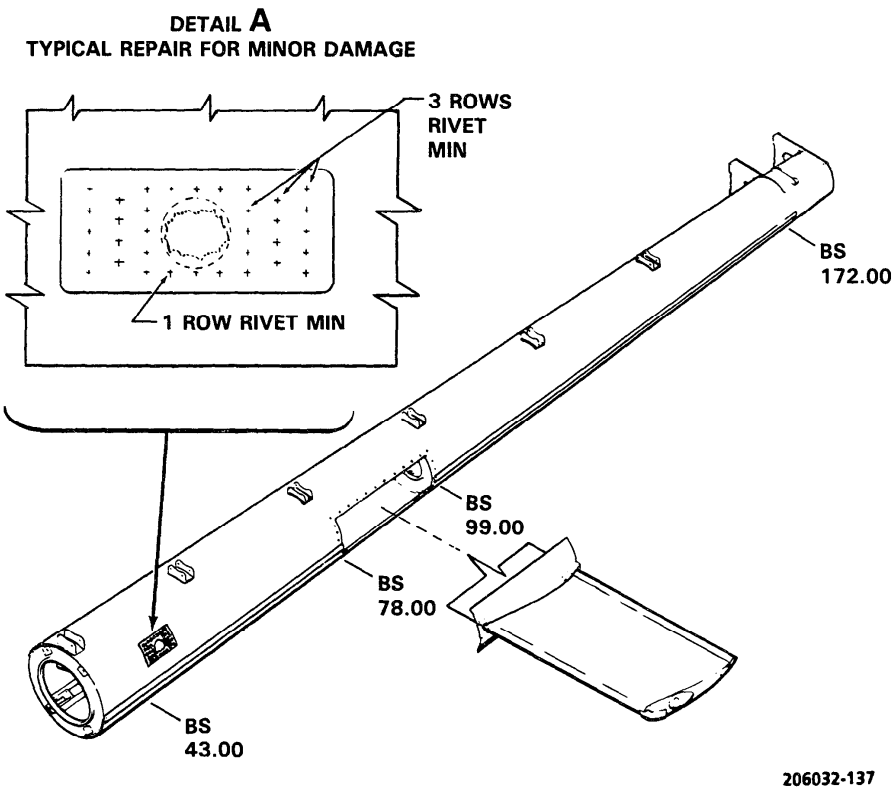

Figure 2-47. Tailboom Damage Limits and Repair

(b) Sand surfaces lightly with sandpaper (C125) to remove all surface finish.

WARNING

Acetone is extremely flammable and toxic to eyes, skin, and respiratory tract. Wear protective gloves and goggles/face shield. Avoid repeated or prolonged contact. Use only in well-ventilated areas (or use approved respirator as determined by local safety/industrial hygiene personnel). Keep away from open flames, sparks, hot surfaces or other sources of ignition.

(c) Wipe sanded areas with a clean cheesecloth (C37) moistened with acetone (C2), then wipe dry with a clean cheesecloth (C37) before acetone (C2) evaporates.

(4) Apply adhesive (C19) to patch and position patch over damaged area.

(5) Install a minimum of three rows of NAS1738B rivets running circumferentially and a minimum of one row of rivets running longitudinally in the patch. Rivets are to be installed within pot life of adhesive (C19).

NOTE

Rivet size and spacing to be the same as skin lap joints.

b. Replacement of Tail Rotor Driveshaft Hanger Bearing Support Brackets. (AVIM)

CAUTION

If more than one support bracket requires replacement, replace one at a time. If original vertical position of driveshaft cannot be determined with ± 0.030 inch, tailboom must be returned to depot for installation of bracket using alignment fixture.

(1) Obtain dimensions between driveshaft and tailboom at support bracket to be replaced. If support bracket is being replaced due to elongation of mounting holes, position driveshaft at approximately center of elongation prior to obtaining dimensions.

(2) Manufacture a shim block, of phenolic or other soft material, to fit contour of tailboom and driveshaft using dimensions obtained in substep (1).

(3) Place shim block between driveshaft and tailboom as near as possible to support bracket being replaced. Ensure that shim block fits snugly with no excessive pressure on driveshaft or tailboom.

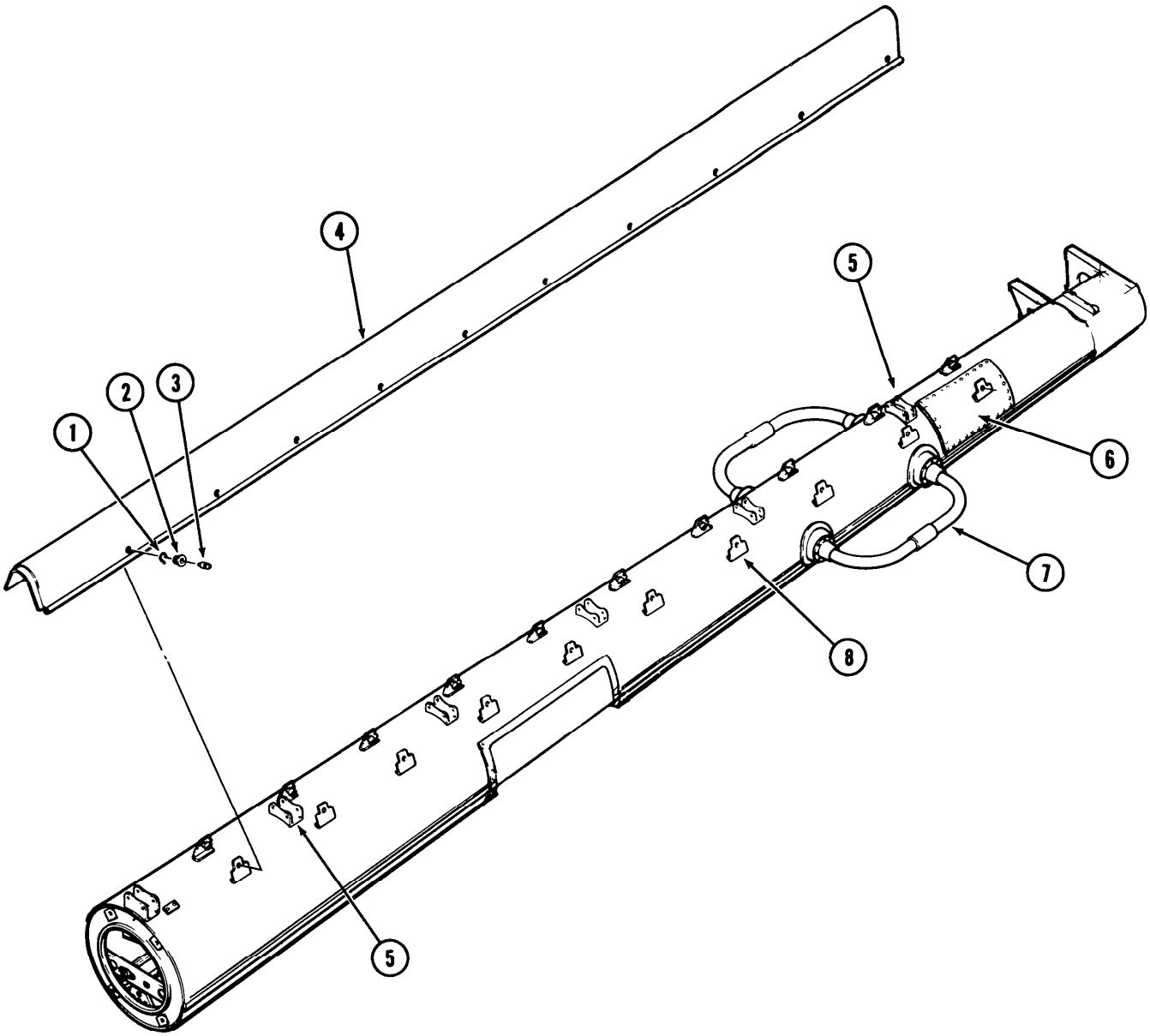

206032-138

1. Snapring
2. Grommet
3. Fastner
4. Driveshaft Cover
5. Driveshaft Hanger Bearing Support Bracket
6. Access Cover (If Installed)
7. VOR Antenna (If Installed)
8. Clip

Figure 2-48. Tailboom Assembly (MWO 55-1520-228-30-24 Accomplished)

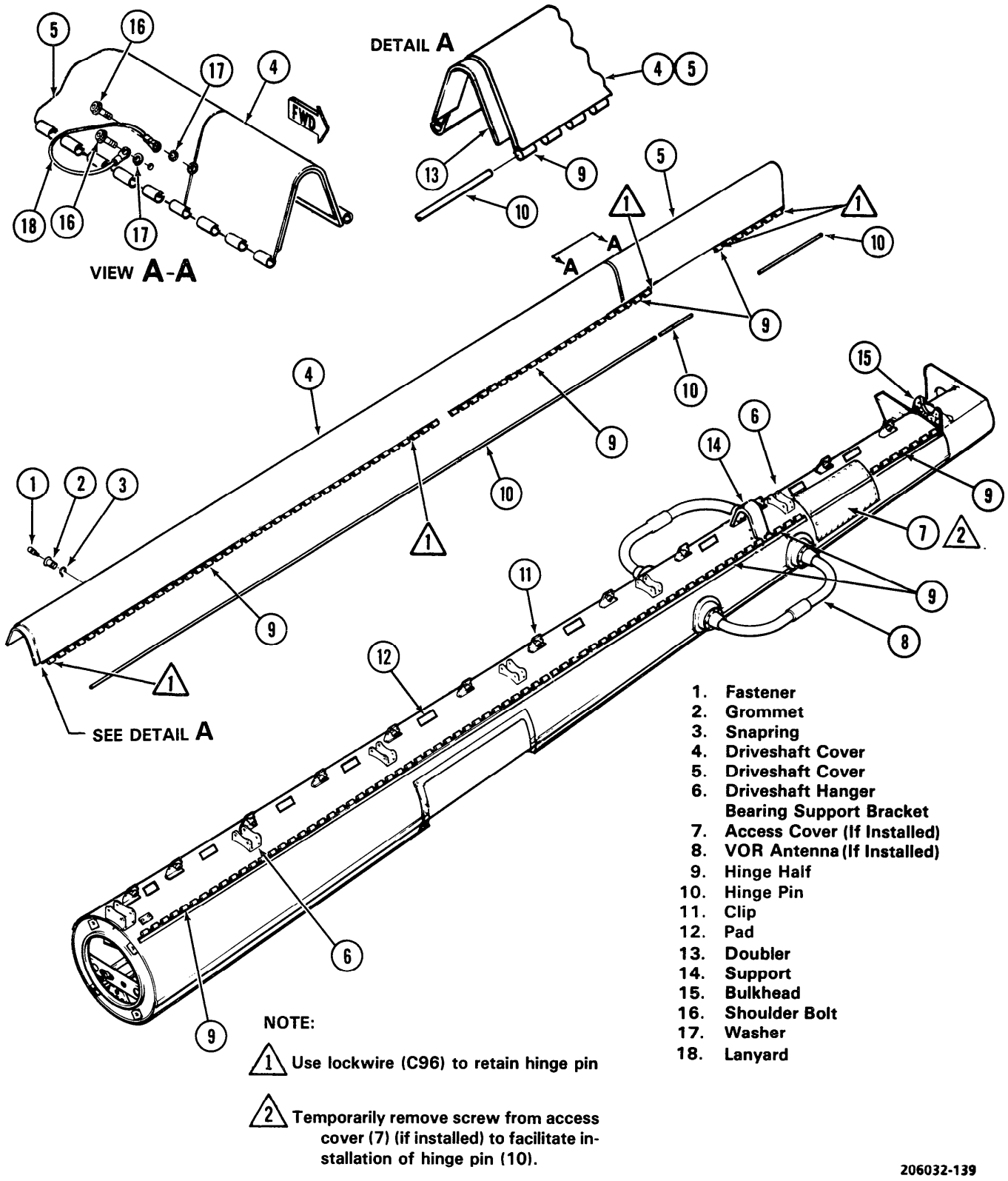

Figure 2-49. Tailboom Assembly
(MWO 55-1520-228-50-25 Accomplished)

(4) Remove bolts attaching driveshaft hanger to support bracket.

NOTE

When removing some support brackets, it may be necessary to remove driveshaft hanger attaching bolts from adjacent hangers to provide sufficient clearance. These bolts must be properly reinstalled prior to marking location of holes to be drilled in support bracket.

(5) Rotate driveshaft hanger to provide clearance and remove screws attaching support bracket to tailboom. Remove support bracket from tailboom.

(6) Position new support bracket on tailboom and install attaching screws.

(7) Rotate driveshaft hanger until mounting holes for driveshaft hanger are in vertical alignment with support bracket. Allow driveshaft to seek its normal lateral position. Hold driveshaft against shim block.

(8) Using a hole-finder, mark location of holes to be drilled in support bracket from driveshaft hanger mounting holes.

(9) Remove support bracket from tailboom.

CAUTION

Drill press should be used for drilling support bracket to ensure holes are drilled parallel.

(10) Drill two holes **0.252 (± 0.001)** inch in support bracket. Deburr holes and prime with primer (C118).

(11) Position support bracket on tailboom and install attaching screws.

(12) Ensure that holes in support bracket and mounting holes in driveshaft hanger are aligned within **0.030** inch. If holes do not align within tolerance, tailboom must be replaced.

NOTE

If interference is encountered between the safety pin on the forward end of the long tail rotor driveshaft and the bearing support bracket, material up to 0.120 inch on a 1.000 inch radius may be removed from the bracket to provide clearance.

(13) Install driveshaft hanger attachment bolts and perform driveshaft alignment check. Refer to paragraph 6-127.

(14) Make entry in helicopter historical records (DA Form 2408-15) that support bracket has been replaced. Each individual support bracket may be replaced three times in the field. Replace tailboom if support bracket required replacement more than three times. Send damaged tailboom to depot for repair.

c. Repair of tail rotor gearbox mount. (AVIM)

(1) Fabricate a plate from sheet metal approximately **0.500** inch thick, the same size as the tailrotor gearbox base, with a true surface over the entire face. Drill four holes in plate to match gearbox mounting holes.

WARNING

Acetone is extremely flammable and toxic to eyes, skin, and respiratory tract. Wear protective gloves and goggles/face shield. Avoid repeated or prolonged contact. Use only in well-ventilated areas (or use approved respirator as determined by local safety/industrial hygiene personnel). Keep away from open flames, sparks, hot surfaces or other sources of ignition.

(2) Clean paint to bare metal to **1.000** inch diameter area around mounting bolt holes where parts are missing or loose. Use sandpaper (C126) or acetone (C2).

WARNING

Acetone is extremely flammable and toxic to eyes, skin, and respiratory tract. Wear protective gloves and goggles/face shield. Avoid repeated or prolonged contact. Use only in well-ventilated areas (or use approved respirator as determined by local safety/industrial hygiene personnel). Keep away from open flames, sparks, hot surfaces or other sources of ignition.

(3) Clean area where paint was removed with acetone (C2). Allow to dry.

(4) Apply double-faced tape (C139) around mounting hole(s) on bottom of metal plate to hold washer(s) in position and to keep plate from being bonded to washer(s).

(5) Attach washer(s) in position on plate to match mounting area on tailboom and apply a maximum **0.020** inch thickness film of adhesive (C19) to exposed surface of washer(s).

(6) Tailbooms with MWO 55-1520-228-50-25 accomplished, prepare laminated shims in accordance with paragraph 6-203, step h.

(7) Align and position plate on tailboom.

(8) Coat four bolts with lubricant (C111) and install to align washers and plate. Do not tighten bolts, allow plate to rock during bolt installation, or clamp plate to tailboom. Place a 10 pound weight on plate to apply pressure on washers during curing time.

NOTE

Steps (9) through (11) do not apply after accomplishment of MWO 55-1520-228-50-25.

(9) Fabricate a second plate from steel metal approximately **0.250** inch thick and approximately **2.000** inches larger than first plate, with a true surface over its entire face. Attach a sheet of sandpaper (C124) to surface of plate.

(10) Allow adhesive to cure and remove bolts and first plate.

(11) Draw sandpaper side of second plate over washer(s) in short smooth strokes until a flat, solid contact is made at all four points.

(12) Position first metal plate on washers to check for plate contact at all four points. Use a flashlight and shim to check for solid contact. Plate must not rock.

(13) Install dissimilar metal tape (C139) to surface of bonded washers.

NOTE

The top surfaces of bonded washers with dissimilar metals tape installed must be in the same plane within 0.002 inch and parallel within 0.001 inch across their diameter.

(14) Prime and touch-up paint on tailboom.

WARNING

Cleaning solvents are flammable and toxic. Use only in well-ventilated area. Avoid skin contact and inhalation of vapors. Protect eyes with safety glasses.

WARNING

Acetone is extremely flammable and toxic to eyes, skin, and respiratory tract. Wear protective gloves and goggles/face shield. Avoid repeated or prolonged contact. Use only in well-ventilated areas (or use approved respirator as determined by local safety/industrial hygiene personnel). Keep away from open flames, sparks, hot surfaces or other sources of ignition.

NOTE

Helicopters with MWO 55-1520-228-50-25 accomplished, use one radius block (P/N 206-032-004-27) on left side and one radius block (P/N 20-042-21-8) on the right side. Refer to Appendix D for fabrication instructions.

(15) Missing Radius Blocks — Fabricate new radius blocks (P/N 206-032-004-27) in accordance with Appendix D. If the T/R gearbox was previously installed with the radius blocks missing, inspect the doublers for any damage caused by the forward mounting nuts of the gearbox. Nicks and scratches on doublers not exceeding **0.008** inch deep may be repaired using 400 grit sandpaper (C126). Sandpaper (C126) the mounting surface of a newly fabricated radius block and clean with acetone (C2). After acetone (C2) has dried, remove the acetone (C2) residue with a clean dry cloth. Clean mounting area of radius block on tailboom per substep (16) following. Bond in place per substeps (17) and (18) following.

WARNING

Acetone is extremely flammable and toxic to eyes, skin, and respiratory tract. Wear protective gloves and goggles/face shield. Avoid repeated or prolonged contact. Use only in well-ventilated areas (or use approved respirator as determined by local safety/industrial hygiene personnel). Keep away from open flames, sparks, hot surfaces or other sources of ignition.

(16) Loose Radius Blocks — Clean mounting area of radius block(s) to bare metal and clean mating surface doubler(s) to bare metal around bolt hole area. Use sandpaper (C126) or acetone (C2). Allow cleaned area to dry. Remove any residue with clean dry cloth.

(17) Apply a film of adhesive (C19) to exposed mating surface of radius block(s) and position them inside tailboom under forward tail rotor gearbox stud holes. Install two bolts coated with lubricant (C111) to align radius blocks to doubler. Tighten nuts on bolts sufficiently to apply a 10 pound damping force on radius block(s) during cure time. Allow adhesive to cure, then remove bolts.

(18) Prime and touch up paint in radius block areas as required.

d. Repair of access cover (6, figure 2-48 or 7, figure 2-49) is not allowed. Damaged cover will be replaced.

e. Repair of bulkheads, web, and tailboom skin adjacent to access cover.

(1) No repair to bulkheads allowed. Request disposition from AMCOM engineering.

(2) No repair to web allowed within **1.000** inch of a bulkhead, external skin, or the cover. Request disposition from ATCOM engineering. Other damage may be repaired by accepted sheet metal practices.

(3) No repair to tailboom skin allowed above the web. Request disposition from ATCOM engineering. Other damage may be repaired by accepted sheet metal practices.

2-250. INSTALLATION — TAILBOOM.

a. If not previously accomplished, inspect at fuselage tailboom attachment fittings for condition. Look for loose rivets, cracking, and pitting. Fittings should be repainted if necessary.

b. Check aft fuselage bulkhead for cracking, and also check the tailboom attachment holes, both fuselage and tailboom, for excessive wear.

NOTE

Maximum diameter of the aft fuselage and/or tailboom attachment holes as a result of elongation, wear or rework, must not exceed 0.383 inch diameter.

The four nylatron chafing pads installed on the front bulkhead of the tailboom are to be attached with adhesive (C9). Plug any existing exposed rivet holes.

c. Ensure shim (7, figure 2-46) is securely bonded to tailboom with adhesive (C9).

d. Position tailboom against aft fuselage and place suitable supports at each end of tailboom as shown in figure 2-46.

CAUTION

Ensure correct bolt is installed in correct hole. Refer to figure 2-46.

e. Align tailboom and aft fuselage attachment holes. Install bolts (1,2, and 3, figure 2-46) from tailboom side with a washer (4) under the head of each bolt (countersink side toward bolt head). Install new washers (5) and new nuts (6) and torque **375 TO 415 INCH-POUNDS** (addition of drag torque not required) and using sealing compound (C132) paint torque stripes. Retorque bolts after maintenance test flight and after **100** hours off light following tailboom replacement and repaint (C132) slippage marks.

NOTE

Install washers (5) between fitting and nut so that not less than 1 thread and not more than 3 threads are showing.

f. Connect antitorque control tube.

g. Connect electrical wiring and antenna leads.

h. Connect tail rotor driveshaft. Refer to paragraph 6-157.

CAUTION

Ensure proper length screws are installed in access panel to avoid contact between screws and structure. Length of screw excluding head must not exceed 0.375 inch.

i. Install aft engine fairing. Refer to paragraph 2-68.

j. Remove tailboom supports.

k. Install vertical fin if required. Refer to paragraph 2-269.

l. Install tail rotor driveshaft cover, as required. Refer to paragraph 2-257.

m. Install access plates (13, figure 2-1 **A**, figure 2-2 **C**).

2-251. TAIL ROTOR DRIVESHAFT COVER.

2-252. DESCRIPTION — TAIL ROTOR DRIVESHAFT COVER. Helicopters with MWO 55-1520-228-30-24 accomplished have a one-piece aluminum alloy cover that encloses long tail rotor driveshaft. The cover is not a primary tailboom structure and may be removed under special conditions. The purpose of the cover is to improve the reliability of the tail rotor driveshaft, bearings, and reduce maintenance requirements. It is attached to the tailboom by fasteners that secure to clips which are riveted to the left and right side of the tailboom.

2-253. DESCRIPTION — TAIL ROTOR DRIVESHAFT COVER. Helicopters with MWO 55-1520-228-50-25 accomplished have a two-piece hinged aluminum alloy cover that encloses tail rotor driveshafts. The cover provides protection to the tail rotor driveshaft and bearings, and reduces maintenance requirements. It is attached to the left side of tailboom by hinges. Hinge halves are riveted to the tailboom and tail rotor driveshaft cover. Clips and fasteners secure the cover to the right side of the tailboom.

CAUTION

To prevent possible injuries to personnel and damage to the helicopters, the tail rotor driveshaft cover will be closed for ground run.

2-254. REMOVAL — TAIL ROTOR DRIVESHAFT COVER.

CAUTION

Use care not to damage tail rotor driveshaft cover(s) or tailboom skin when removing cover.

a. On helicopters with MWO 55-1520-228-30-24 accomplished, loosen fasteners (3, figure 2-48) on both sides of tail rotor driveshaft cover and remove from tailboom.

NOTE

The helicopter may be flown without tail rotor driveshaft cover(s) installed at the discretion of the unit commander.

It may be necessary to use a scrap piece of hinge pin or similar material to drive the hinge pin out.

b. On helicopters with MWO 55-1520-228-50-25 accomplished, loosen fasteners (1, figure 2-49). Open covers (5 and 4). Disconnect lanyard (18) securing aft cover (5) to support (14). If forward cover (4) is removed, remove screw from cover (7) at the end of forward hinge (9). Cut lockwire at ends of hinges (9) and remove hinge pins (10) from hinges (9).

c. When the helicopter is to be flown without the tail rotor driveshaft cover installed, the following will apply:

(1) A weight and balance calculation on DD Form 365-C shall be accomplished to update weight and balance records.

(2) On helicopters with MWO 55-1520-228-30-24 accomplished, antichafe tape (C112) shall be removed from tailboom. Replace antichafe tape when tail rotor driveshaft cover is reinstalled.

2-255. INSPECTION — TAIL ROTOR DRIVESHAFT COVER.

a. Inspect driveshaft cover (4, figure 2-48, or 4 and 5, figure 2-49 for condition of paint.

b. Inspect driveshaft cover for damage, cracks, dents, tears, scratches and corrosion. If crack in driveshaft cover is suspected, refer to TM 1-1520-254-23, Technical Manual Aviation Unit Maintenance (AVUM) and Aviation Intermediate Maintenance (AVIM) Manual Nondestructive Inspection Procedures for OH-58 Helicopter Series.

c. On helicopters with MWO 55-1520-228-30-24 accomplished:

(1) Inspect driveshaft cover fasteners (3, figure 2-48) for damage or corrosion. Missing fasteners are not permitted.

(2) Inspect clips (8) mounted on tailboom for cracks, deformation, loose rivets, corrosion, or damage. These conditions are not permitted. If crack in clip is suspected, refer to TM 1-1520-254-23, Technical Manual Aviation Unit Maintenance (AVUM) and Aviation Intermediate Maintenance (AVIM) Manual Nondestructive Inspection Procedures for OH-58 Helicopter Series.

(3) Inspect pressure sensitive (antichafe) tape (C112), on tailboom for deterioration, tears, delamination, or embrittlement. These conditions are not permitted.

NOTE

Aircraft with driveshaft cover lower edges flared outboard, which allows clearance eliminating chafing on tailboom, do not require installation of chafing tape.

d. On helicopters with MWO 55-1520-228-50-25 accomplished:

(1) Inspect driveshaft cover fasteners (1, figure 2-49) and hinge halves (9) for damage and corrosion. Missing fasteners or loose rivets in hinge halves are not permitted.

(2) Inspect tailboom clips (11) and hinge halves (9) for cracks, deformation loose rivets, or damage. These conditions are not permitted. If crack in clip or hinges is suspected, refer to TM 1-1520-254-23, Technical Manual Aviation Unit Maintenance (AVUM) and Aviation Intermediate Maintenance (AVIM) Manual Nondestructive Inspection Procedures for OH-58 Helicopter Series.

(3) Inspect the 14 chafe pads (12) on tailboom for deterioration, separation, loose rivets, or embrittlement. These conditions are not permitted.

2-256. REPAIR — TAIL ROTOR DRIVESHAFT COVER.

a. Repair or replace tailboom clips (8, figure 2-48 or 11, figure 2-49) that do not meet inspection requirements.

b. Replace damaged or missing fasteners (3, figure 2-48 or 1, figure 2-49) on driveshaft cover.

c. On helicopters with MWO 55-1520-228-30-24 accomplished, replace pressure sensitive (antichafe) tape (C112), that does not meet inspection requirements.

NOTE

d. On helicopters with MWO 55-1520-228-50-25 accomplished:

(1) Replace damaged tailboom hinge halves (9) and pads (12) that do not meet inspection requirements.

(2) Replace damaged cover hinge halves (9) and doubler (13) that do not meet inspection requirements.

e. Repair driveshaft cover skin in accordance with TM 1-1500-204-23.

2-257. INSTALLATION — TAIL ROTOR DRIVESHAFT COVER.

CAUTION

Use care not to damage tail rotor driveshaft cover or tailboom skin when installing cover.

a. On helicopters with MWO 55-1520-228-30-24 accomplished:

(1) Place driveshaft cover (4, figure 2-48) on tailboom. Ensure cover is on outboard side of clips (8) to prevent damaging clips.

(2) Align cover fasteners (3) to clips (8) and lock in place on left and right side of driveshaft cover.

b. On helicopters with MWO 55-1520-228-50-25 accomplished:

(1) Place aft cover (5, figure 2-49) on tailboom. Align hinge halves. Install aft hinge pins (10) forward to aft. Leave cover (5) hinged open at this point. Position forward cover (4) on tailboom. Align hinge halves. Install hinge pin (10).

(2) Use lockwire (C96) to retain hinge pins (10).

(3) Align cover fasteners (1) with clips (11). Lock fasteners.

(4) Attach lanyard (18) on aft cover (5) to support (14) with shouldered bolt (16) and washer (17).

2-258. HORIZONTAL STABILIZER.

2-259. DESCRIPTION — HORIZONTAL STABILIZER (FIGURES 2-50 AND 2-51). The horizontal stabilizer is constructed of aluminum and mounted through the tailboom. The stabilizer is supported and secured by plates on each side.

2-260. INSPECTION — HORIZONTAL STABILIZER. Inspect horizontal stabilizer, support plates, and tailboom attaching points for cracks, dents, and damage. Check for loose or worn rivets, missing screws, and navigation lights for security and condition of lens. To allow access for removal of foreign objects from inside of stabilizer, cut 3/4" holes at 21 3/4" from centerline of stabilizer (both left and right) and 3 1/2" from leading edge on upper surface, and install 3/4" button plugs P/N 5340-708-8933. Seal plugs with sealer type II, Class B2, NSN 8030-00-723-2746, MIL-S-8802E. If damage is suspected, refer to TM 1-1520-254-23, Technical Manual Aviation Unit Maintenance (AVUM) and Aviation Intermediate Maintenance (AVIM) Manual Nondestructive Inspection Procedures for OH-58 Helicopter Series.

2-261. REMOVAL — HORIZONTAL STABILIZER.

a. Remove screws and washers attaching two upper supports to tailboom and stabilizer.

b. Disconnect position light wires at terminal block.

c. Remove screws and washers attaching two lower supports to tailboom and stabilizer.

d. Slide stabilizer out of tailboom taking care not to damage the surface.

e. If stabilizer is to be replaced, remove the position lights and wiring from existing stabilizer for reinstallation.

2-262. REPAIR — HORIZONTAL STABILIZER. Refer to TM 1-1500-204-23 for repairs.

2-263. INSTALLATION — HORIZONTAL STABILIZER.

a. Slide stabilizer into tailboom, taking care not to damage the surface.

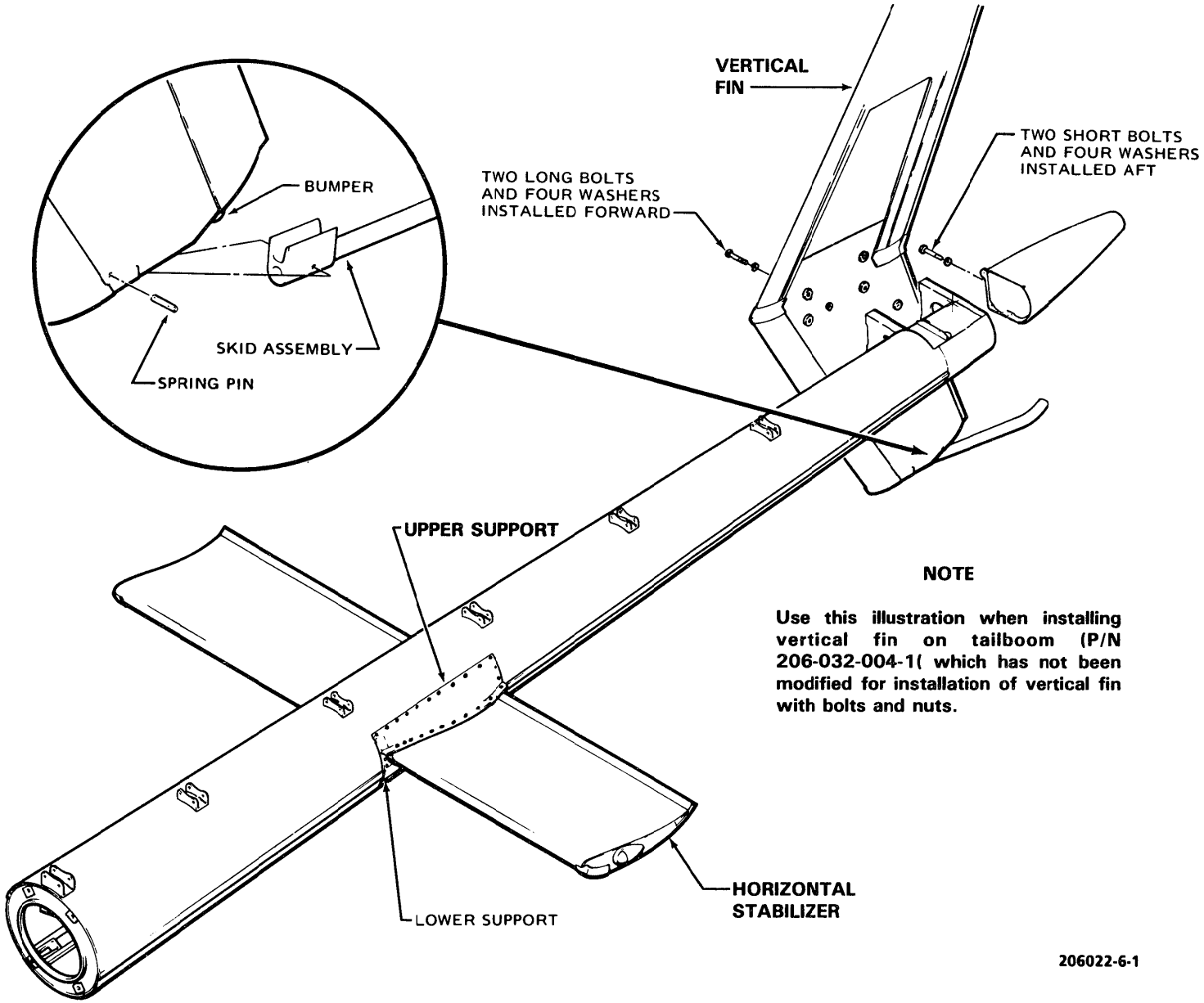

NOTE

Use this illustration when installing vertical fin on tailboom (P/N 206-032-004-1(which has not been modified for installation of vertical fin with bolts and nuts.

Figure 2-50. Horizontal Stabilizer and Vertical Fin Installation (Sheet 1 of 2)

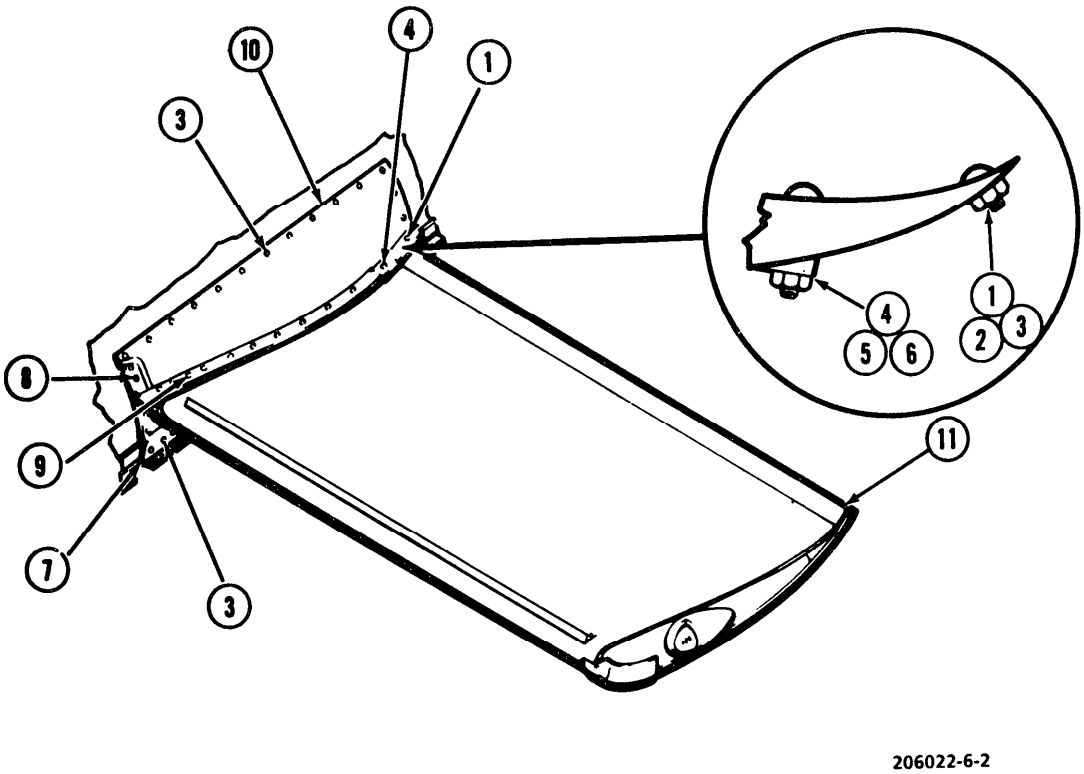

1. Nut
2. Washer
3. Screw
4. Nut
5. Washer
6. Screw
7. Lower Support
8. Screw
9. Screw
10. Upper Support
11. Horizontal Stabilizer

Figure 2-50. Horizontal Stabilizer and Vertical Fin Installation (Sheet 2 of 2)

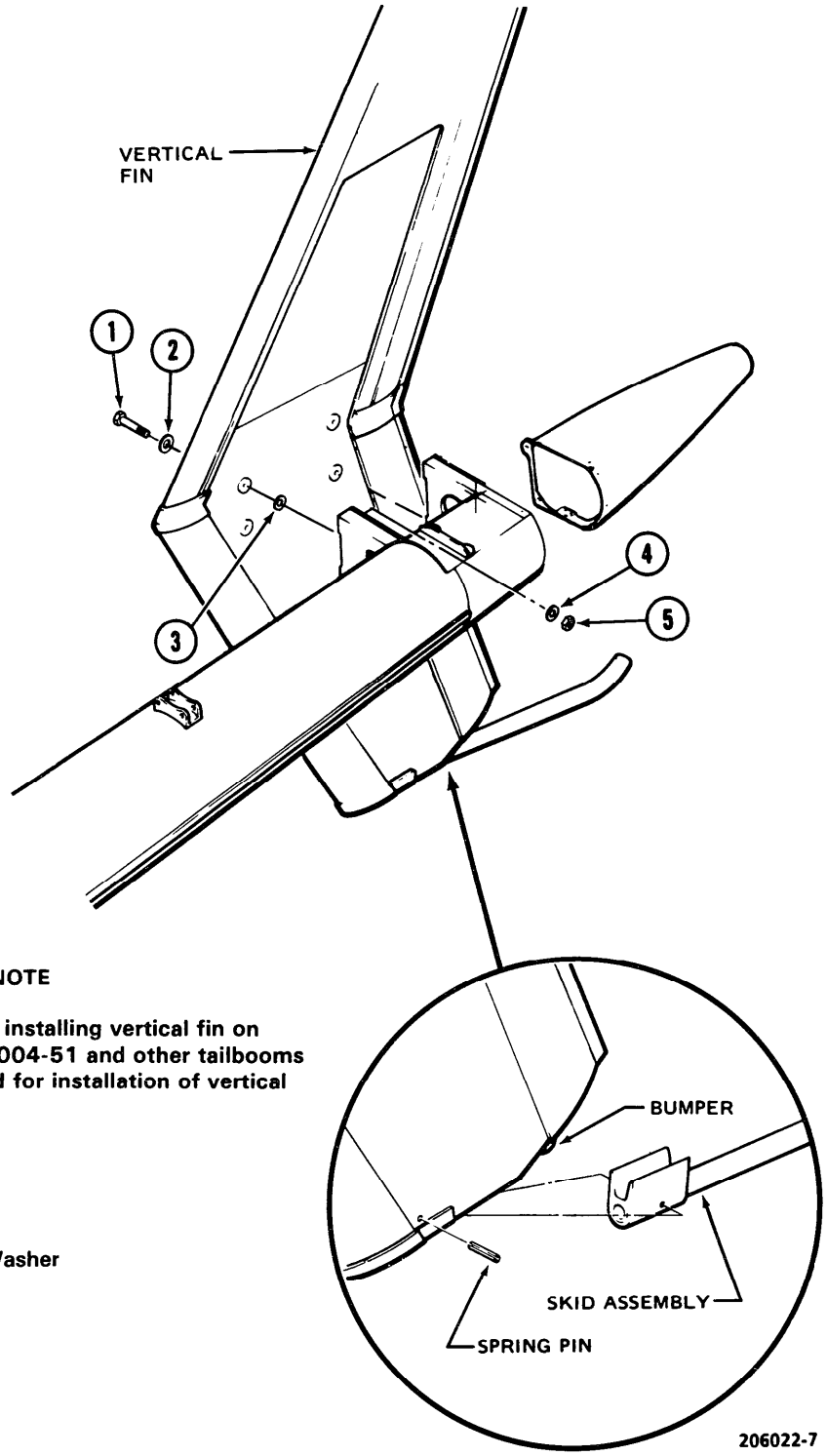

NOTE

Use this illustration when installing vertical fin on tailbooms P/N 206-032-004-51 and other tailbooms which have been modified for installation of vertical fin with bolts and nuts.

1. Bolt
2. Countersunk Washer
3. Washer
4. Washer
5. Nut

Figure 2-51. Vertical Fin Installation

b. Install lower supports (7, figure 2-50) attaching with screws (3 and 9) to tailboom and horizontal stabilizer.

NOTE

Start all screws first and then complete tightening to keep from stripping screws in misaligned holes.

c. Connect position light wires at the terminal block and ensure wire is serviceable and clamped.

d. Install upper supports (10), attaching with screws (3, 8, and 9).

e. Install nut (4), washer (5), and screw (6) through upper and lower supports (7 and 10) and horizontal stabilizer (11).

f. Install nut (1), washer (2), and screw (3).

2-264. VERTICAL FIN AND SUPPORTS.

2-265. DESCRIPTION — VERTICAL FIN AND SUPPORTS (FIGURES 2-50, THROUGH 2-53.) The vertical fin is of aluminum honeycomb construction and provides a mount for the tail skid and radio antennas. The vertical fin is attached to the tailboom by means of forward and aft vertical fin supports. These supports are of aluminum construction and are classified as major structural members.

2-266. INSPECTION — VERTICAL FIN AND SUPPORTS.

a. Upper leading and trailing edge.

(1) Punctures of any size are not acceptable unless repaired.

(2) Chips not to exceed **0.250** inch diameter and less than **10%** of the total area shall be considered negligible.

(3) Open cracks of any length are not acceptable. Open cracks must be repaired. If crack in vertical fin and/or supports are suspected, refer to TM 1-1520-254-23, Technical Manual Aviation Unit Maintenance (AVUM) and Aviation Intermediate Maintenance (AVIM) Manual Nondestructive Inspection Procedures for OH-58 Helicopter Series.

(4) Hair line cracks less than **1.000** inch in length shall be considered negligible. If crack in vertical fin and/or supports are suspected, refer to TM 1-1520-254-23, Technical Manual Aviation Unit Maintenance (AVUM) and Aviation Intermediate Maintenance (AVIM) Manual Nondestructive Inspection Procedures for OH-58 Helicopter Series.

(5) Scratches not to exceed **0.005** inch depth, and not more than **1.000** inch in length shall be considered negligible. All other damage must be repaired, or the assembly removed and replaced with a serviceable vertical fin.

b. Lower leading and trailing edges.

(1) Smooth dents which are not gouged and of less than **3.000** inches in diameter and **0.300** inch deep are acceptable. Dents within one inch of one another (edge-to-edge) are to be considered as one dent.

(2) Nicks and scratches not more than **0.002** inch in depth and of any length, will be considered negligible.

(3) Corrosion pitting not to exceed **0.002** inch in depth, and not more than **10%** of the total area will be considered negligible.

(4) No cracking or punctures will be permitted. If crack is suspected, refer to TM 1-1520-254-23, Technical Manual Aviation Unit Maintenance (AVUM) and Aviation Intermediate Maintenance (AVIM) Manual Nondestructive Inspection Procedures for OH-58 Helicopter Series.

(5) Loose or missing rivets will be unacceptable.

(6) Any damage beyond the aforementioned limitations must be repaired, or the assembly must be removed and replaced with a serviceable vertical fin.

c. Honeycomb area will be inspected as specified in paragraph 2-172. Limitations will be as specified in paragraphs 2-179 and 2-187. If damage to the honeycomb area is suspected, refer to TM 1-1520-254-23, Technical Manual Aviation Unit Maintenance (AVUM) and Aviation Intermediate Maintenance (AVIM) Manual Nondestructive Inspection Procedures for OH-58 Helicopter Series.

d. Antenna leads and couplers will be inspected for security and condition. Do not turn couplers.

e. Mounting bolts will be inspected for damaged threads, cracking, and security. Missing bolts must be replaced. If crack in bolt is suspected, refer to TM 1-1520-254-23, Technical Manual Aviation Unit Maintenance (AVUM) and Aviation Intermediate Maintenance (AVIM) Manual Nondestructive Inspection Procedures for OH-58 Helicopter Series.

f. Forward and aft vertical fin supports will be inspected for cracking, security of attachment, corrosion, and damage. No cracking, loose or missing rivets, or damage beyond the repair limitations specified in figure 2-52 and 2-53 will be permitted. If crack in vertical fin is suspected, refer to TM 1-1520-254-23, Technical Manual Aviation Unit Maintenance (AVUM) and Aviation Intermediate Maintenance (AVIM) Manual Nondestructive Inspection Procedures for OH-58 Helicopter Series.

2-267. REMOVAL — VERTICAL FIN AND SUPPORTS.

a. Disconnect VHF and FM antenna cables at vertical fin.

b. Remove four bolts attaching vertical fin to forward and aft supports. Refer to figure 2-51.

c. Removal and replacement of forward and aft vertical fin supports is not authorized. Loose or

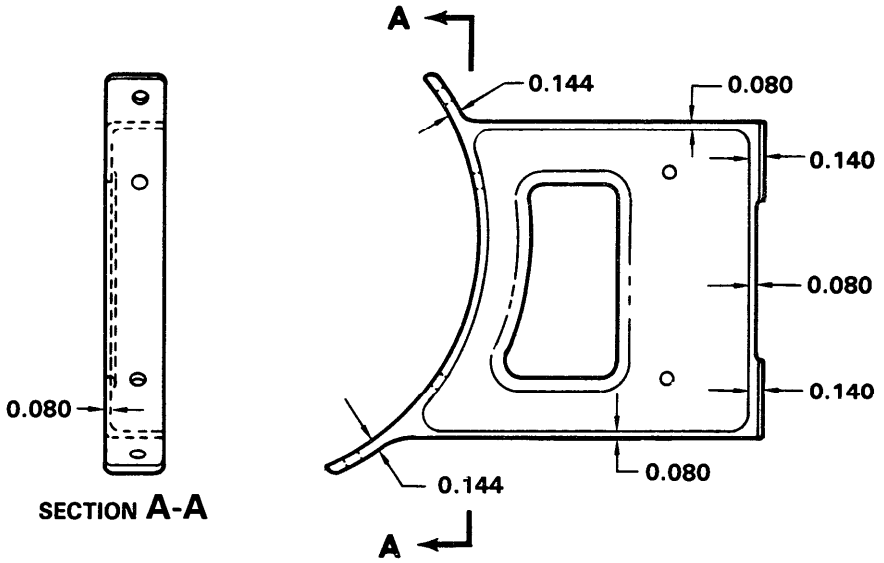

NOTE: All dimensions are indicated in inches.

206031-57

FORWARD VERTICAL FIN SUPPORT 206-031-417

TYPE OF DAMAGE	MAXIMUM DAMAGE AND REPAIR DEPTH
MECHANICAL	Smooth damage exceeding 0.010 inch shall be blended out. Cleanup depth or repairs shall not exceed minimum dimension shown above.
CORROSION	Repair areas after cleanup shall not exceed minimum dimensions shown above.
MAXIMUM AREA PER FULL DEPTH REPAIR	2.000 Sq. In.
NUMBER OF REPAIRS	Four

NOTES:

1. Blend out reparable damage with 400 grit abrasive paper (C126).

2. Coat all repair areas with chemical conversion coating (alodine) (C38) and apply zinc chromate primer (C118).

Figure 2-52. Repair Limits — Forward Vertical Fin Support

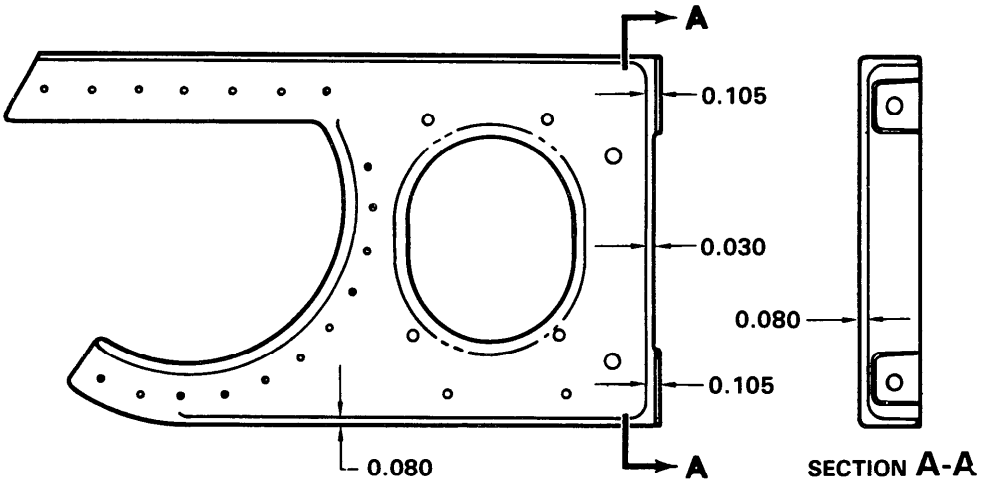

NOTE: All dimensions are indicated in inches.

206031-58

AFT VERTICAL FIN SUPPORT 206-031-418

TYPE OF DAMAGE	MAXIMUM DAMAGE AND REPAIR DEPTH
MECHANICAL	Smooth damage exceeding 0.010 inch shall be blended out. Cleanup depth or repairs shall not exceed minimum dimension shown above.
CORROSION	Repair areas after cleanup shall not exceed minimum dimensions shown above.
MAXIMUM AREA PER FULL DEPTH REPAIR	2.000 Sq. In.
NUMBER OF REPAIRS	Four

NOTES:

1. Blend out reparable damage with 400 grit abrasive paper (C126).
2. Coat all repair areas with chemical conversion coating (alodine) (C38) and apply zinc chromate primer (C118).

Figure 2-53. Repair Limits — Aft Vertical Fin Support

damaged rivets will be replaced one at a time in accordance with instructions contained within TM 1-1500-204-23.

2-268. REPAIR — VERTICAL FIN AND SUPPORTS. Vertical fin and supports will be repaired in accordance with instructions contained in figures 2-39, 2-52, and 2-53, except that only fiberglass repairs will be permitted to the upper forward and aft trailing edges, and nicks, scratches, or pitting in the lower forward and at trailing edges may be blended out provided that not more than 10 percent of material thickness must be removed for cleanup.

NOTE

To gain access to antenna couplers, remove rivets and remove trailing edge of vertical fin or cut a small hole in the fiberglass behind the connectors.

2-269. INSTALLATION — VERTICAL FIN.

CAUTION

The lower aft bolt may require an additional thin washer next to the recess washer if the bolt bottoms out on the ballast weight.

NOTE

This step applies to vertical fin installation on tailbooms P/N 206-032-004-1 which have not been modified for installation of vertical fin with bolts and nuts. Refer to figure 2-50.

a. Position fin on tailboom and install four bolts of proper length and eight washers, two longest bolts forward. The recessed washers are installed next to head of bolts and the thin washers between the fin and mount. Torque bolts **60 TO 70 INCH-POUNDS**.

b. The following steps apply to vertical fin installation on tailbooms P/N 206-032-004-51 which have been modified for installation of vertical fin with bolts and nuts. Refer to figure 2-51.

(1) Place countersunk washers (2) on four bolts (1) with recessed side of washers toward bolt heads. Place four bolts (1), with washers installed, through holes in vertical fin.

(2) Place one thin aluminum washer (3) on each of four bolts (1) on inboard side of vertical fin.

(3) Position vertical fin on tailboom and install special washers (4) and nuts (5). A minimum of one and a maximum of two washers (4) must be installed on each bolt (1) between the nut and the tailboom structure. Install the special washers (4) with the radius toward the tailboom structure. Torque bolts **50 TO 70 INCH-POUNDS.**

c. Connect VHF and FM antenna cables at vertical fin. Slide rubber nipples over connections and secure at both ends with nylon thread (C149) to prevent gasses from fouling connections.

2-270. TAIL SKID.

2-271. DESCRIPTION — TAIL SKID. A tubular, steel, tail skid is attached to the lower section of the vertical fin. The purpose of the tail skid is to warn the pilot of a tail-low attitude when landing. Refer to figure 2-51.

2-272. INSPECTION — TAIL SKID. Inspect tail skid for buckles, cracks, dents, and security of attachment. If crack in tail skid is suspected, refer to TM 1-1520-254-23, Technical Manual Aviation Unit Maintenance (AVUM) and Aviation Intermediate Maintenance (AVIM) Manual Nondestructive Inspection Procedures for OH-58 Helicopter Series.

2-273. REMOVAL — TAIL SKID. Remove attaching spring pin with suitable drift pin and withdraw tail skid from vertical fin.

2-274. REPAIR — TAIL SKID. If the tail skid becomes loose at its mounting point, the following procedures may be utilized for field repair.

a. Remove the tail skid.

b. Apply sealing compound (C129) to tail skid in the area of attachment to the vertical fin.

2-275. INSTALLATION — TAIL SKID. Position tail skid in vertical fin and install spring pin.

NOTE

Should the spring pin hole be worn to a degree where loss of the pin is imminent, the pin may be replaced with a screw and self-locking nut. It is acceptable to install the screw in the worn hole as there is no requirement to enlarge the retainer hole to the next size. Maximum allowable torque of screws is 35 INCH-POUNDS including drag torque.

2-276. SUPPORT — TAILLIGHT.

2-277. DESCRIPTION — SUPPORT, TAILLIGHT. The support is of glass fabric construction and provides a mount for the taillight assembly. Refer to figure 2-54.

2-278. INSPECTION — SUPPORT TAILLIGHT.

a. Inspect support (1, figure 2-54) for cracks and damage. Check for loss, missing screws (2), taillight (5), for security and condition of lens. If crack in taillight support is suspected, refer to TM 1-1520-254-23, Technical Manual Aviation Unit Maintenance (AVUM) and Aviation Intermediate Maintenance (AVIM) Manual Nondestructive Inspection Procedures for OH-58 Helicopter Series.

2-279. REMOVAL — SUPPORT, TAILLIGHT.

a. Disconnect gearbox chip detector wire, VHF and FM antenna cables at vertical fin and remove taillight assembly (5, figure 2-54) from support (1). Disconnect taillight (5) from wire and connector.

b. Remove screws (2) attaching support to tailboom (6). Pull gearbox chip detector wire and VHF and FM antenna cables through and free of grommet hole in support. Ensure that taillight and grommet (4)

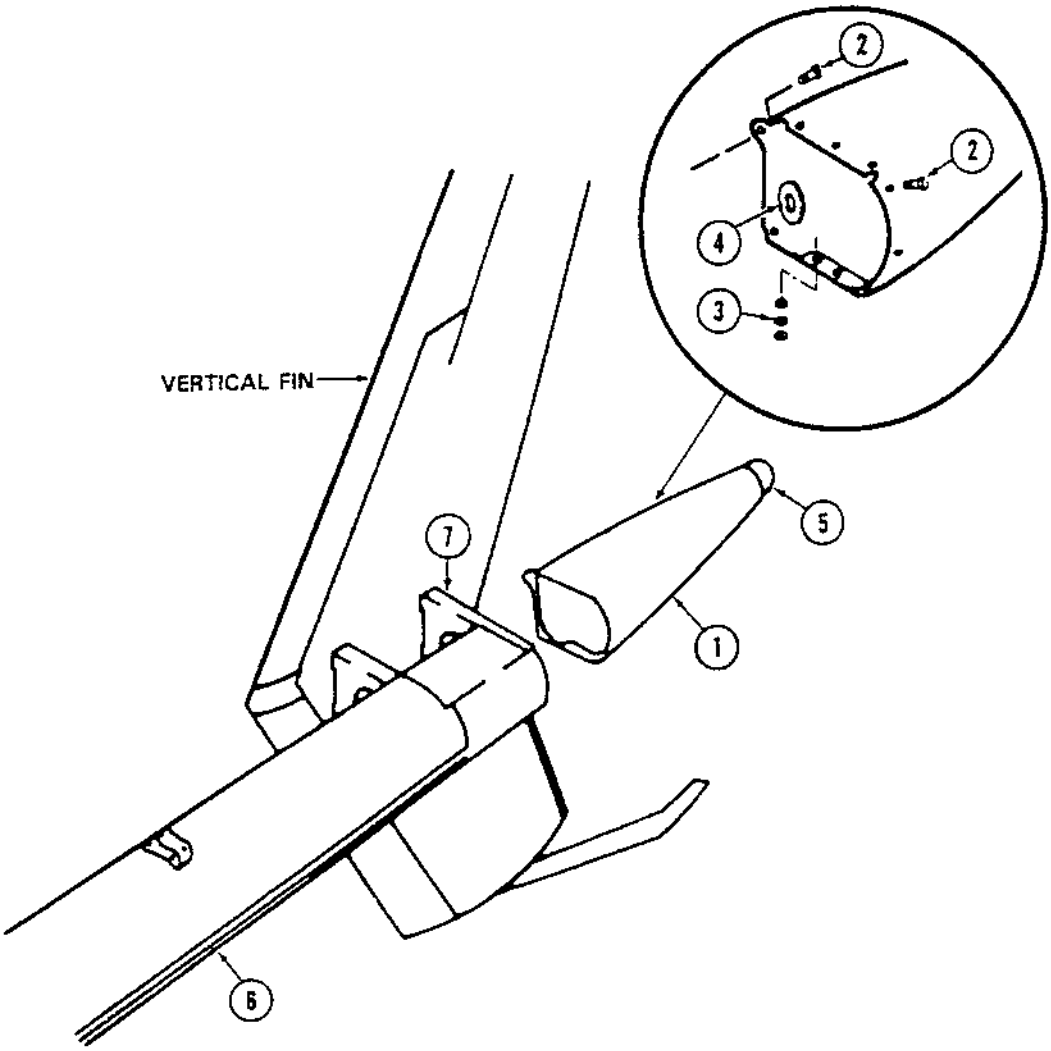

Figure 2-54. Support, Taillight Installation

are not secured to the support (1), before removal of support.

2-280. REPAIR — SUPPORT, TAILLIGHT. Repair damage to support glass fabric material in accordance with TM 1-1500-204-23.

2-281. INSTALLATION — SUPPORT, TAILLIGHT.

a. Insert gearbox chip detector wire and VHF and FM antenna cables through grommet (4, figure 2-54) hole in support (1).

NOTE

Shim between fin support (7) and taillight support (1) on installation with washers (3) (Maximum allowable 0.025 inch, maximum number of washers 3).

b. Position support (1) on tailboom (6) and secure in place with attachment screws (2).

c. Install taillight assembly (5) on rear of support (1).

SECTION III PYLON

2-282. PYLON SUPPORTS (FIGURE 2-55).

2-283. DESCRIPTION — PYLON SUPPORTS. The main transmission is supported on each side by a pylon support link on the cabin roof and attached by clevis arrangement to the roof and by spindle to the transmission.

2-284. INSPECTION — PYLON SUPPORTS.

a. Inspect pylon supports for cracks, scratches, security of attachment, and evidence of elongation in self-aligning bearing. If crack in pylon support is suspected, refer to TM 1-1520-254-23, Technical Manual Aviation Unit Maintenance (AVUM) and Aviation Intermediate Maintenance (AVIM) Manual Nondestructive Inspection Procedures for OH-58 Helicopter Series.

b. Inspect pylon support links and support fitting for nicks, scratches, and minor damage.

c. Inspect bearings for security, loose teflon inserts, and check that bolts are installed in the support link with heads inboard toward the transmission.

2-285. REMOVAL — PYLON SUPPORTS.

a. Remove transmission or use adequate overhead hoist for transmission support. Refer to paragraph 6-71.

b. Remove bolts (18, figure 2-55), nuts (21), and washers (19 and 20) attaching pylon support links (11) to forward and aft pylon support fittings (6 and 12).

c. Remove pylon support links from transmission by removing cotter pins (7), nuts (8), and washers (9).

d. Remove nuts (25), washers (26), and bolts (27) securing forward and aft pylon support fittings (6 and 12) to roof structure.

CAUTION

Do not remove shims under pylon support fittings (6 and 12). If shims are not bonded, identify for reinstallation in same location. Loss or mixing of shims will require depot maintenance for transmission alignment.

2-286. CLEANING AND INSPECTION — PYLON SUPPORTS. (AVIM) Accomplish the cleaning and inspection of pylon supports as follows:

WARNING

Degreasing Solvent is combustible and toxic to eyes, skin, and respiratory tract. Wear protective gloves and goggles/face shield. Avoid repeated or prolonged contact. Use only in well-ventilated areas (or use approved respirator as determined by local safety/industrial hygiene personnel). Keep away from open flames or other sources of ignition.

a. Clean all parts with clean cheesecloth (C37) moistened with degreasing solvent (C62). Wipe dry with clean cheesecloth (C37) prior to evaporation of degreasing solvent (C62).

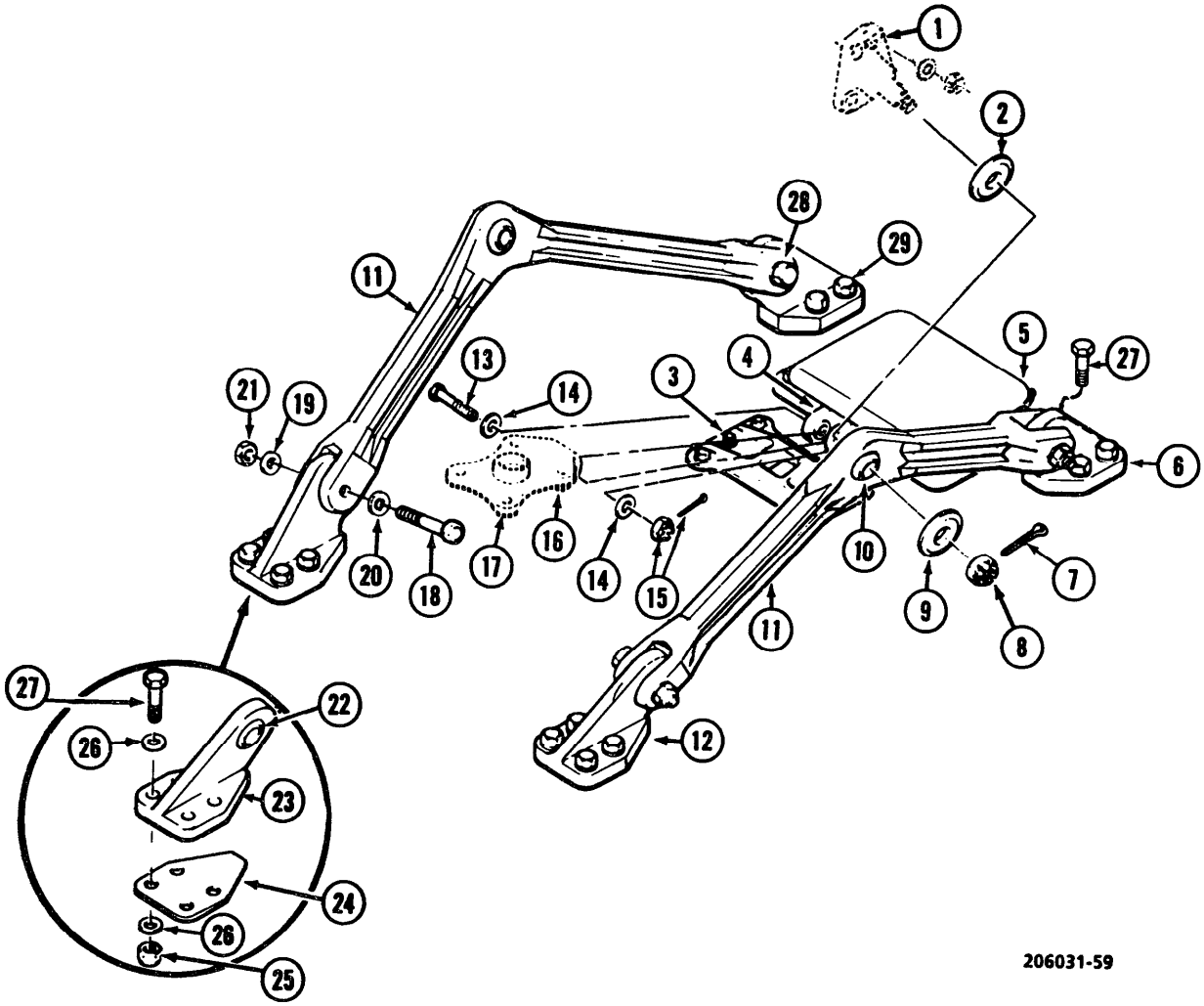

1. Pylon Support Spindle (Ref)
2. Washer
3. Transmission Mount Support
4. Isolation Mount
5. Isolation Mount Cover
6. Aft Pylon Support Fitting
7. Cotter Pin
8. Nut
9. Washer
10. Bearing, Pylon Support Link
11. Pylon Support Link
12. Forward Pylon Support Fitting
13. Bolt
14. Washer
15. Nut, Cotter Pin
16. Bearing, Drag Pin (Ref)
17. Drag Pin Assembly (Ref)
18. Bolt
19. Washer
20. Washer, Recessed
21. Nut
22. Bearing, Support Fitting
23. Fitting, Forward Support
24. Shims
25. Nut
26. Washer
27. Bolt
28. Bushing, Pylon Support Link
29. Bolt

Figure 2-55. Pylon Support Link and Fitting

b. Inspect bearing (10, figure 2-55) in pylon support link and bearings (22) in fittings (6 and 12) and bolts (18) for smoothness of operation, looseness, and general condition. Maximum allowable play of each bearing is **0.010** inch axial.

c. Inspect bushings (28) in pylon support link for excessive wear. I.D. of each bushing shall not exceed **0.438** inch. Inspect for scoring on inside surface of bushing. Scoring or damage to inside surface of bushing must not exceed **0.002** inch.

d. Remove all paint from the pylon support link in preparation for magnetic particle inspection.

e. Inspect pylon support links (11, figure 2-55) with magnetic particle inspection paying particular attention to the area around attaching points. (Refer to TM 55-1500-335-23.) Any crack is reason for rejection.

(1) Circular field using central conductor through pylon support link bearing hole, magnetize at 1,800 amperes. Inspect hole I.D. and surrounding area.

(2) Longitudinal field by placing half the link perpendicular to the coil axis and magnetize at 6,000 ampere-turns. (Requires 2 inspections.)

2-287. REPAIR — PYLON SUPPORTS. (AVIM).

a. Replace pylon support links (11, figure 2-55) found defective by magnetic particle inspection. Refer to TM 55-1500-335-23.

b. Replace bearings (10) in pylon support links (11), and support fitting bearing (22) in fittings (6 and 12) which do not meet inspection requirements.

c. Press staked bearing from support link of fitting.

d. Remove any burr edges visible on the bearing housing by use of a fine or medium grade abrasive cloth (C45 or C55).

e. Prime mating surfaces of bearing and link or fitting housing with wet zinc chromate primer (C118) just prior to bearing installation.

CAUTION

When extreme interference fit occurs at the beginning of the press fit operation, stop and determine the cause. Do not stake the bearing unless the cause can be eliminated or satisfactorily remedied.

f. Align the bearing and housing so that the bearing will not be cocked. Seat the bearing into the housing using a suitable press.

g. Pregrooved bearing outer races will be staked to the pylon support link assembly (both sides) using tool (T33). Bearings in the support fittings must be staked (both sides) using tool (T27). After staking, the gap between the staked lip of the outer bearing race and the chamfered area of the staked assembly or fitting shall be less than **0.008** inch. After staking, the breakaway torque of the bearing must be less than **6 INCH-POUNDS**. If bearing is too tight after staking, spin bearing inner race at 80 to 120 rpm until proper torque is obtained.

h. Replace bushings (28) in pylon support links which do not meet inspection requirements.

i. Press damaged or worn bushings from pylon support links.

j. Coat mating surfaces with zinc chromate primer (C118) and press new bushing into support link. Line ream two bushings **0.437** to **0.438** inch diameter.

k. Nicks, scratches, and minor damage incurred in service may be dressed out to a maximum depth of **0.010** inch in the attach point areas and **0.020** inch elsewhere. No more than two repairs in each of the attach point areas. Minimum radius of any repair is **0.500** inch. Imperfections as a result of forging and machining during manufacture are not cause for rejection. Touch up bare spots with zinc chromate primer (C118).

2-288. INSTALLATION — PYLON SUPPORTS.

CAUTION

Only steel support fittings are to be installed on the OH-58C and OH-58A with 720 engine and all replacements are to be steel on any OH-58A/C. Only steel supports are to be used. No aluminum links are to be used on OH-58A/C aircraft.

a. Secure forward and aft pylon support fittings (6 and 12, figure 2-55) to roof structure using bolts, washers, and nuts. Torque nuts **120 TO 145 INCH-POUNDS** A or **120 TO 160 INCH-POUNDS** C Apply a thin bead of sealing compound (C131) around each pylon support fitting.

NOTE

Short leg of pylon support link must be installed forward to insure proper alignment of transmission drag pin and pylon isolation mount.

b. Attach pylon support links (11) to fittings (6 and 12) with bolts (18), washers (19), recessed washers (20), and nuts (21). Torque nuts **460 TO 510 INCH-POUNDS**.

2-289. PYLON ISOLATION MOUNT AND TRANSMISSION MOUNT SUPPORT.

2-290. DESCRIPTION — PYLON ISOLATION MOUNT AND TRANSMISSION MOUNT SUPPORT. The main transmission is supported and attached at its lower rear section by an isolation mount (4, figure 2-55) which dampens pylon to fuselage vibrations, and limits pylon rock. Movement of the transmission and isolation mount is limited by means of a drag pin (17), which extends down into a plate on the deck. Contact between the drag pin and its static stop produces a noise known as spike knock.

2-291. INSPECTION — PYLON ISOLATION MOUNT (P/N 206-030-539-3) AND TRANSMISSION MOUNT SUPPORT. See paragraph 2-292 for pylon isolation mount, P/N 206-030-539-5 and -101.

a. Inspect isolation mount P/N 206-030-539-3 as follows:

(1) Inspect cover (5, figure 2-55) for security. Wipe excess oil from cover and inspect for tears and cuts. None are permitted.

(2) If isolation mount cover is deteriorated or torn remove cover and visually examine clevis (13, figure 2-57) area and elastomeric dampers for separation while flexing elastomeric dampers by means of the clevis. Due to the stiffness of the mount, laterial rocking of the mast assembly may be necessary; exercise extreme care to prevent damaging the transmission mount support. Refer to paragraph 2-294 d. and 2-296 for repair limits and procedures.

NOTE

If cover (5, figure 2-55) has been contacted by the main driveshaft housing, as evidenced by grooving and/or tearing, refer to AVIM for main driveshaft inspection. If swashplate to cowling or main driveshaft to isolation mount contact occurs, the following inspections will be complied with: Hard Landing Inspection, Pylon Whirl Inspection, to include special inspection of main driveshaft assembly and the drag pin assembly must be removed from transmission assembly for a detailed inspection. The four drag pin assembly mounting studs will be replaced.

(3) Verify drag pin bolt (13, figure 2-55) is properly installed and in right direction.

(4) Inspect drag pin for condition and security. (Refer to transmission inspection, paragraph 6-70.) Look for obviously bent or broken pin. Typically the four drag pin mounting studs will fail before the drag pin. Consequently nicks and dents are not critical.

b. Inspect the transmission mount support as follows:

(1) Inspect transmission mount support for security of attachment.

(2) Inspect the transmission mount support stop on the cabin roof. Normally the upper edges of the stop will tend to round out as a result of impact with the drag pin. Impact damage along upper edge of static stop must not exceed **0.100** inch depth as indicated in figure 2-56. Cumulative area of damage is not significant.

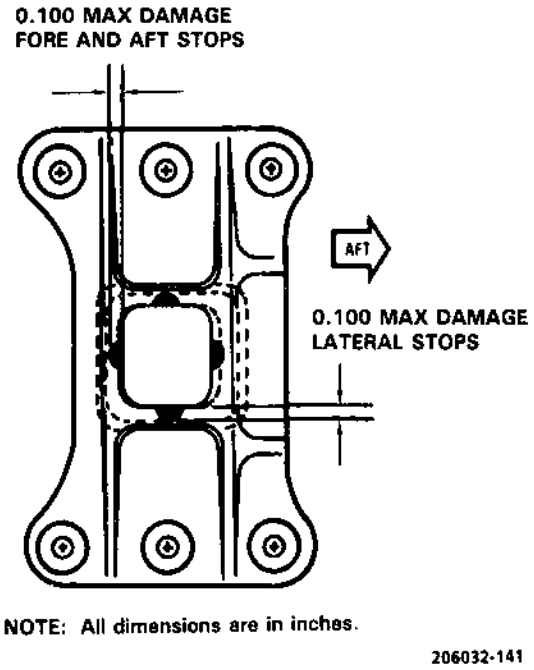

Figure 2-56. Damage Limits — Transmission Mount Support Stop

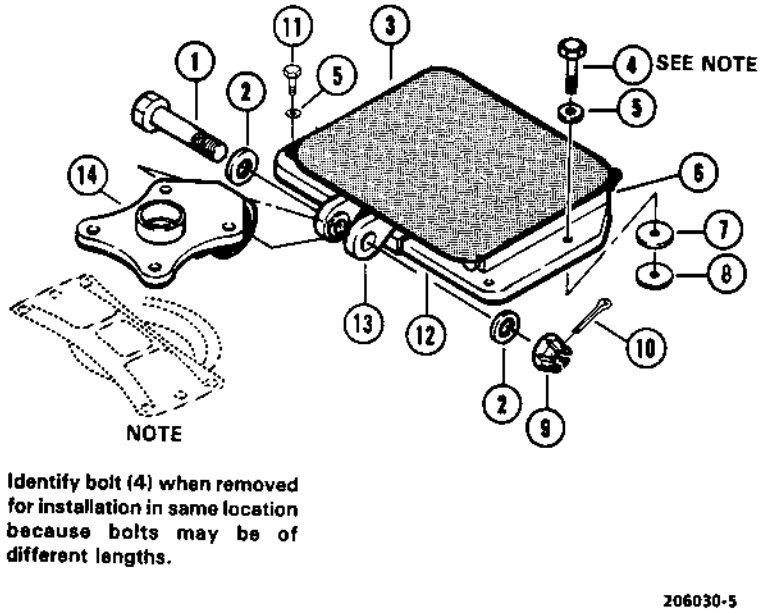

1.	Bolt	8.	Shim
2.	Washers	9.	Nut
3.	Neoprene Boot	10.	Cotter Pin
4.	Bolt	11.	Bolt
5.	Washer	12.	Gasket
6.	Mount	13.	Clevis
7.	Shim	14.	Drag Pin

Figure 2-57. Pylon Isolation Mount Installation (P/N 206-030-539-3)

2-292. INSPECTION — PYLON ISOLATION MOUNTS, P/N 206-030-539-5 AND -101 AND TRANSMISSION MOUNT SUPPORT.

a. Refer to paragraph 2-295 for repair limits and procedures. Inspect these isolation mounts as follows:

(1) Remove oil on and around mount with a clean, dry cloth. (These mounts do not have top neoprene covers.)

NOTE

If top surface of mount has been contacted by the main driveshaft coupling, as evidenced by grooving, refer to AVIM for main driveshaft inspection. If swashplate to cowling or main driveshaft isolation mount contact occurs, the following inspections will be complied with: Hard Landing Inspection, Pylon Whirl Inspection, to include special inspection of main driveshaft assembly and drag pin, assembly must be removed from transmission assembly for a detailed inspection. The four drag pin assembly mounting studs will be replaced.

(2) Inspect drag pin bolt, drag pin, and transmission mount support in accordance with paragraph 2-291.

2-293. REMOVAL — PYLON ISOLATION MOUNT AND TRANSMISSION MOUNT SUPPORT.

a. Remove pylon isolation mount as follows:

(1) Remove main driveshaft (paragraph 6-10). Install lift hook (S16) or clevis on main rotor mast nut and support transmission with hoist to prevent tipping of transmission.

(2) Remove nut (9, figure 2-57) and remove bolt (1) which passes through pylon drag pin (14), washers (2), and mount (6, figure 2-57 or 5, figure 2-59).

(3) Remove cover from inside upper cabin roof beam assembly.

CAUTION

Do not remove shims under isolation mount. If shims become debonded measure, and record on DA Form 2408-15, shim thickness and location. Loss of shims or improper shimming will require realignment by depot level maintenance.

NOTE

Identify bolt (4, figure 2-57) when removed for installation in same location because the bolts may be of different lengths.

(4) Remove four bolts (4) which pass through isolation mount and cabin roof.

(5) Remove mount (6, figure 2-57) or yoke (5, figure 2-59) from roof.

b. Remove transmission mount support as follows:

(1) Install lift hook (S16) or clevis on main rotor mast nut and support transmission with hoist to prevent tipping of transmission.

(2) Remove nut (9, figure 2-57), bolt (1), and washers (2) if not previously accomplished.

(3) Remove cover from inside upper cabin roof beam assembly, then remove six bolts and washers from on top of cabin roof.

(4) Remove transmission mount support.

2-294. INSPECTION — PYLON ISOLATION MOUNT (P/N 206-030-539-3) AND TRANSMISSION MOUNT SUPPORT. See paragraph 2-295 for pylon isolation mount, P/N 206-030-539-5 and -101. Inspect mount P/N 206-030-539-3 as follows:

a. Wipe up oil spillage, etc., then remove isolation mount neoprene boot (3, figure 2-57).

b. Visually examine clevis area and elastomeric dampeners for bonding separation while flexing elastomeric dampeners by means of the clevis. Due to the stiffness of the mount, lateral rocking of the mast assembly may be necessary; exercise extreme care to prevent damaging the transmission mount support.

c. Remove mount in accordance with paragraph 2-293 and fluorescent penetrant inspect the housing and clevis. Refer to TM 55-1500-335-23.

d. Repair or replace the isolation mount if any of the following conditions exist:

NOTE

Cure dates are embossed on elastomer surface, usually on the right rear surface inside. Typical cure dates are 6-70, 2-70, 1-71, 1-72, and 5-72. Whenever an isolation mount problem is reported, include cure date of mount, etc.

(1) Rubber dampers oil saturated.

(2) Rubber dampers excessively cracked and/or broken. Cracks must not exceed **0.100** inch in depth.

(3) Loose and/or torn front boot (around clevis).

(4) Loose, missing, or improperly seated center damper screws.

(5) Clevis (13) permanently deformed or cracked. No repair authorized.

(6) Clevis holes worn excessively. Hole diameter should not exceed **0.504** inch.

(7) Check yoke dimension of **0.626** to **0.632** inch between inside faces of yoke. Replace yoke if dimension exceeds 0.633 inches.

(8) Excessive bonding separation between rubber dampers and housing. Bonding separation should not exceed **0.250** square inch in each of the four active areas of the forward and aft dampers, nor should it exceed **1.000** square inch per assembly.

2-295. INSPECTION-PYLON ISOLATION MOUNTS (P/N 206-030-539-5 AND -101) AND TRANSMISSION MOUNT SUPPORT. Inspect these isolation mounts as follows:

a. Remove mount and mount support in accordance with paragraph 2-294. Clean oil from mount with-clean, dry cloth. (These mounts do not have top neoprene covers.)

b. Remove cotter pins (1, figure 2-59), nut (2), washers (3), and belts (4).

c. Remove yoke (5) from molded assembly (6).

d. Remove screws (7) from side brackets (8 and 9).

e. Remove front boot (10) by carefully inserting a knife-edge between front boot and molded assembly (6) at sealant line. Care must be taken in order that elastomeric sections in line with sealant are not cut or damaged. Carefully pull front boot off center plate of molded assembly.

WARNING

Acetone is extremely flammable and toxic to eyes, skin, and respiratory tract. Wear protective gloves and goggles/face shield. Avoid repeated or prolonged contact. Use only in well-ventilated areas (or use approved respirator as determined by local safety/industrial hygiene personnel). Keep away from open flames, sparks, hot surfaces or other sources of ignition.

NOTE

Temporary repairs on the front boots which are not deteriorated from age or oil saturation may be rebonded with sealing compound (C131) after thoroughly cleaning with acetone (C2).

f. Remove screws (11) from side brackets (8 and 9). Inspect for corrosion inside mount assembly surfaces of the top and bottom plates and inside walls of brackets (8 and 9). Pitting corrosion and white-gray surface oxidation exuding from aluminum plate surfaces and crevices in the bond areas are causes for removal and replacement of the isolation mount.

g. Remove rear cover (12) by inserting a knife-edge between cover and molded assembly (6) at sealant line.

h. Inspect mount as outlined in table 2-2. Do not remove top or bottom plates of molded assembly (6).

Table 2-2. Inspection of Transmission Isolation Mount (206-030-539-5 and -101)

PART	INSPECTION FOR	ACTION
Front Boot (10, figure 2-59)	Cuts or tears in elastomeric boot around clevis.	Remove and replace boot if cuts or tears are evident.
Molded Assembly (6), yoke (5), and side brackets (8 and 9)	Metal-to-rubber bond separation: flex-cracks (Surface cracks of rubber due to flexing)	Replace entire mounting if separation exceeds a total of 2.500 square inch area or if flex crack exceeds 0.500 inch deep.
	Nicks, gouges, and, corrosion in metal parts	Replace entire mount if nicks or gouges are evident in critical areas. In noncritical areas, nicks and gouges up to **0.030** inch deep may be polished out. After polishing, apply coating (C38), and paint with primer (C116).
	Wear of the **0.4995** to **0.5000** inch diameter clevis hole.	Replace yoke if hole diameter exceeds **0.5005** inch.
	Slight damage or deterioration of oil resistant coating.	Permissible, provided bond separation and flex-crack limits are met.
	Cracks in critical areas (i.e. yoke, center plate of molded assy, side brackets, top and bottom plates) remove screws (7) and deflect boot (10) away from mount. This will permit the fluorescent penetrant inspection of the center plate. If crack in critical areas is suspected, refer to TM 1-1520-254-23, Technical Manual Aviation Unit Maintenance (AVUM) and Aviation Intermediate Maintenance (AVIM) Manual Nondestructive Inspection Procedures for OH-58 Helicopter Series.	Fluorescent penetrant inspection for cracks. Replace entire mount if cracks are evident. Refer to TM 55-1500-335-23.
	Dimension of **0.625** to **0.626** inch between faces of yoke.	Replace yoke if dimension exceeds **0.633** inch.
	Deformed metal parts.	Replace entire mount if metal is deformed.
Bearings (13)	Clearance between spherical bearing and outer bearing ring.	Replace entire mount if radial clearance exceeds **0.006** inch.
	Slight damage to or oil deterioration of oil resistant coating on flexing element.	This is permissible provided bond separation and flex-crack limits are met.

i. Before replacing front boot (10) clean all unbonded mounting surfaces of molded assembly (6) with aluminum wool (C23) and remove as much as possible of the old adhesive from boot (10) with a stiff brush. Apply Ecobond 45 (C5) **0.002 to 0.005** inch thick on mounting surfaces of boot (10), top and bottom plates of assembly (6) and side brackets (8 and 9). Apply a thin bead of sealing compound (C130) along the outside edges of mourning surfaces of boot (10), top and bottom places of assembly (6), and side brackets (8 and 9).

j. Position front boot (10) over spherical bearings (13) in molded assembly (6). Install screws (7).

WARNING

Acetone is extremely flammable and toxic to eyes, skin, and respiratory tract. Wear protective gloves and goggles/face shield. Avoid repeated or prolonged contact. Use only in well-ventilated areas (or use approved respirator as determined by local safety/industrial hygiene personnel). Keep away from open flames, sparks, hot surfaces or other sources of ignition.

k. Before replacing rear cover (12) clean all metal mounting surfaces with acetone (C2). Old adhesive must be completely removed. Apply sealing compound (C130) **1/16** inch thick to mounting surfaces of molded assembly (6) to include side brackets (8 and 9) and top and bottom plates.

l. Position rear cover (12) and install screws (11) finger tight.

m. Allow sealing compound (C130) to cure at room temperature for **12 to 24** hours, then tighten screws (11) and clean off excess sealant. Add a bead of sealant (C129) around mating surfaces of front and rear covers and the mount to prevent moisture entering the mount.

n. Inspect yoke (5) as outlined in Table 2-2.

o. Place yoke (5) over spherical bearings (13) (clevis holes face down). Install washers (3), bolts (4), and torque nuts (2) **150 TO 225 INCH-POUNDS**. Secure with cotter pins (1) as shown in figure 2-59.

2-296. REPAIR — PYLON ISOLATION MOUNT AND TRANSMISSION MOUNT SUPPORT.

a. Repair pylon isolation mount P/N 206-030-539-3 as follows:

(1) Replace neoprene boot (3, figure 2-57) if deteriorated, punctured, cracked, or excessively loose on housing.

(2) Nicks and gouges up to **0.030** inch deep in housing and clevis may be blended out, and touched up with alodine (C38) or epoxy polyamide primer (C116).

(3) Remove burrs, etc., from attachment bolt hole flats.

WARNING

Acetone is extremely flammable and toxic to eyes, skin, and respiratory tract. Wear protective gloves and goggles/face shield. Avoid repeated or prolonged contact. Use only in well-ventilated areas (or use approved respirator as determined by local safety/industrial hygiene personnel). Keep away from open flames, sparks, hot surfaces or other sources of ignition.

(4) Loose or torn front boots which are not also deteriorated from age or oil saturation may be rebonded with sealing compound (C130). Surfaces to be bonded must be carefully cleaned with acetone (C2), aluminum oxide coating removed from adjacent surfaces with sandpaper (C126), and re-clean with acetone (C2). Acetone (C2) must not contact active damper areas. Use sealing compound sparingly.

(5) Isolation mounds which have torn and deteriorated front boots around the clevis may be repaired by fabrication of a new boot, provided the isolation mount is otherwise serviceable. Proceed as follows:

(a) Remove defective boot with the aid of needle-nose pliers and other suitable hand tools.

WARNING

Acetone is extremely flammable and toxic to eyes, skin, and respiratory tract. Wear protective gloves and goggles/face shield. Avoid repeated or prolonged contact. Use only in well-ventilated areas (or use approved respirator as determined by local safety/industrial hygiene personnel). Keep away from open flames, sparks, hot surfaces or other sources of ignition.

(b) Remove screw/plate fasteners located on either side of clevis 180 degrees apart. Remove all rubber and rubber-like residue with sturdy putty knife, or similar tools. Clean screw/plate fasteners with acetone (C2). Refer to figure 2-58.

(c) From a **1-1/2** inch thick low density urethane foam sheet (C152), cut two each blocks measuring approximately **1 x 1-3/4 x 1-1/2** inches as shown in figure 2-58. Place one block on each exposed clevis section in a wrap around manner and apply masking tape (C143) to hold in place. Refer to figure 2-58.

(d) Apply enough sealing compound (C130), to fill recessed void around the clevis base above the restraining urethane foam in a sufficient amount to flow about **1/8** inch deep to each screw plate fastener.

WARNING

Degreasing Solvent is combustible and toxic to eyes, skin, and respiratory tract. Wear protective gloves and goggles/face shield. Avoid repeated or prolonged contact. Use only in well-ventilated areas (or use approved respirator as determined by local safety/industrial hygiene personnel). Keep away from open flames or other sources of ignition.

NOTE

For this application only, degreasing solvent (C62) may be added to sealant. This practice is specifically prohibited in other applications. Mix 100 parts by weight of base compound, 10 parts by weight of accelerator, and 12 parts by weight of ethylene glycol monobutyl ether (C63). Carefully fold material for five minutes. Avoid violent agitation and air entrapment. Skin contact should be avoided.

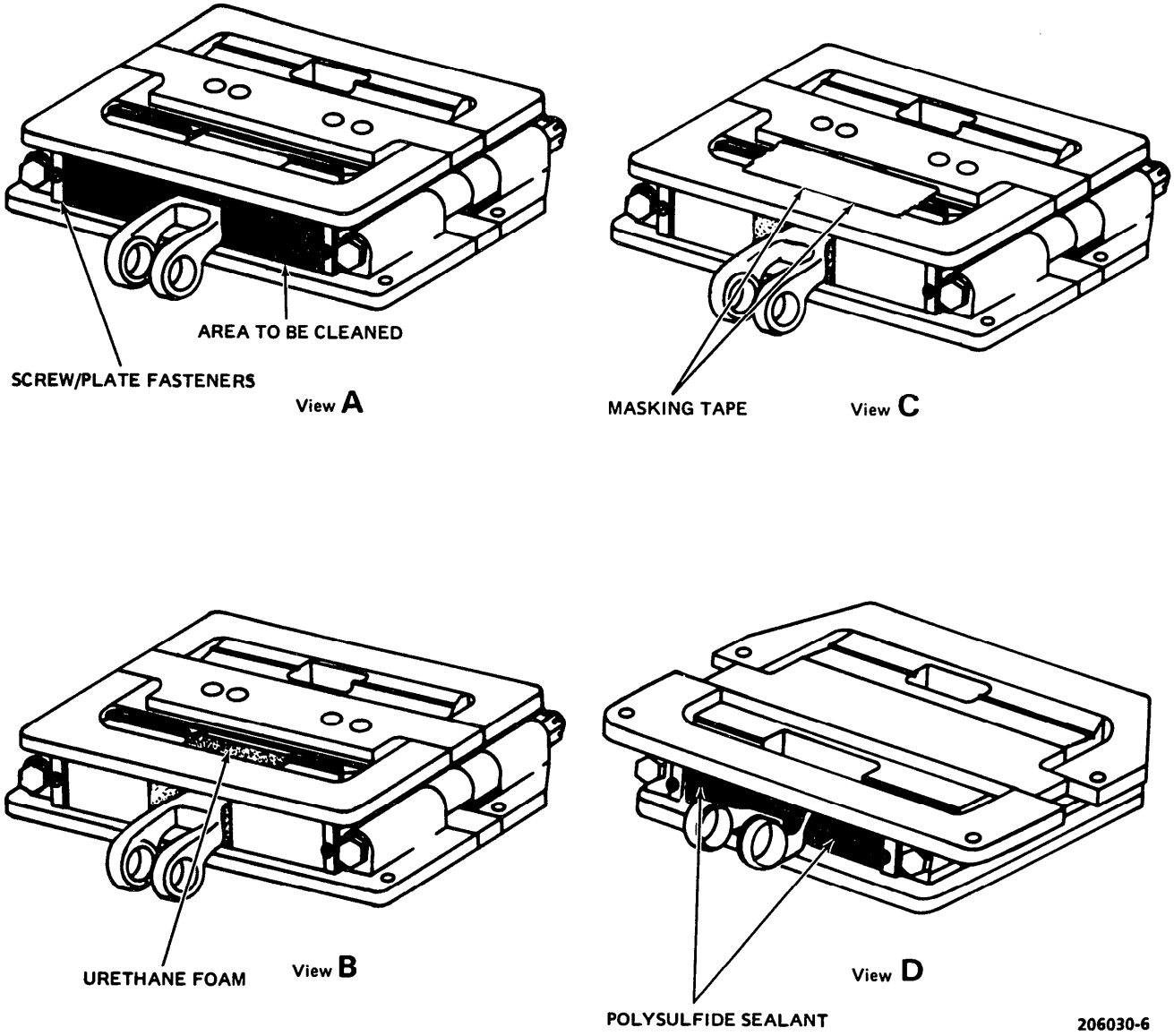

Figure 2-58. Pylon Isolation Mount Repair

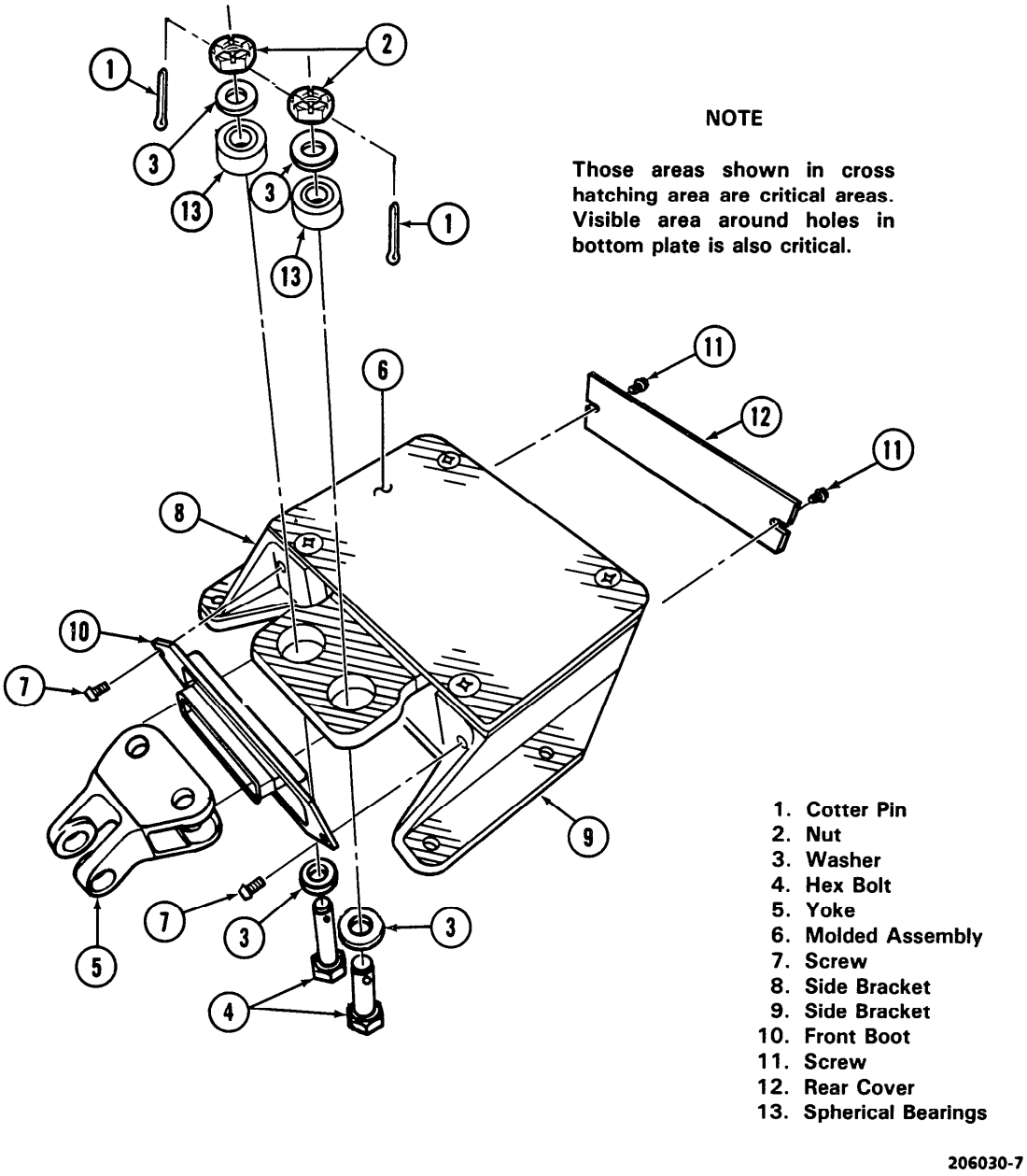

Figure 2-59. Pylon Isolation Mount (P/N 206-030-539-5 and -101)

(e) Allow compound to cure **48** hours. Inspect for edge separation attributable to excessive shrinkage. Also inspect for voids attributable to solvent, or air entrapment. Once compound has cured urethane foam should be carefully cut free from sealant and removed. Removal of urethane foam will facilitate subsequent inspection for leakage.

(f) Isolation mount is ready for installation following sealing compound cure and inspection.

WARNING

Acetone is extremely flammable and toxic to eyes, skin, and respiratory tract. Wear protective gloves and goggles/face shield. Avoid repeated or prolonged contact. Use only in well-ventilated areas (or use approved respirator as determined by local safety/industrial hygiene personnel). Keep away from open flames, sparks, hot surfaces or other sources of ignition.

(6) Loose bottom plates may be rebonded to mount using adhesive (C19) or equivalent. Ensure surfaces to be bonded are thoroughly cleaned with acetone (C2) prior to application of bonding adhesive (C19).

b. Repair transmission mount support as follows:

(1) Dress out dents and gouges, etc.

(2) Repaint as necessary.

2-297. CLEANING — PYLON ISOLATION MOUNT AND TRANSMISSION MOUNT SUPPORT. Except in cases of prolonged oil saturation and damage as indicated by crazing, cracking, separation, and softness, oil may be wiped clean after removal of mount from helicopter. Use a clean, dry cloth, or a cloth dampened with a mild solution of cleaning compound (C43). Do not immerse. Cleaning solution must be completely removed with clean water and mount dried thoroughly prior to reinstallation. Transmission mount support will be wiped clean with rag, andoil removed from oil pan with a rag, sponge, or any suitable means.

2-298. INSTALLATION — PYLON ISOLATION MOUNT AND TRANSMISSION MOUNT SUPPORT.

a. Install pylon isolation mount (figure 2-57) as follows:

WARNING

Early isolation mounts (P/N 206-030-539-3) had two washers bonded to inside faces of clevis in lieu of machined bosses. Do not install isolation mount on helicopter without these washers in place.

(1) Wipe oil and dirt from mount and mount area with a clean, dry cloth.

WARNING

Acetone is extremely flammable and toxic to eyes, skin, and respiratory tract. Wear protective gloves and goggles/face shield. Avoid repeated or prolonged contact. Use only in well-ventilated areas (or use approved respirator as determined by local safety/industrial hygiene personnel). Keep away from open flames, sparks, hot surfaces or other sources of ignition.

NOTE

Identify bolt (4, figure 2-57) when removed from installation in same location because the bolts may be of different lengths.

(2) When shims are not bonded, they may be rebonded using adhesive (C19). Clean surfaces with acetone (C2). Apply a small amount of adhesive around outside edges of shims and bond in place. Adhesive should not be applied under or between shims as this would increase thickness.

(3) Position isolation mount (figure 2-57 or 2-59) on cabin roof and insert bolts (4, figure 2-57) through mount and roof into nut plates. Torque bolts **50 TO 70 INCH-POUNDS** and lockwire (C96).

(4) Insert bolt (1) with washer (2) through right side of isolation mount clevis (13) and drag pin (14). Install washer (2) and nut (9) and torque **480 TO 690 INCH-POUNDS**. Secure with cotter pin (10).

(5) Apply a thin bead of sealing compound (C131) to form a seal between mount and cabin roof. (Isolation mount P/N 206-030-539-3 only).

(6) Install upper cabin roof beam cover using eight screws and washers.

(7) Fasten upper roof blanket assembly.

(8) Reinstall transmission assembly, main driveshaft assembly, etc.

b. Install transmission mount support as follows:

(1) Remove debris from mounting surface.

(2) Position static stop on upper cabin roof and align mounting holes.

(3) Insert six bolts with one washer on each bolt into mounting hole.

(4) Install six nuts, one on each bolt, via opening in upper cabin roof beam.

(5) Install upper cabin roof beam cover using eight screws and washers.

(6) Fasten upper roof blanket assembly.

(7) Reinstall transmission assembly, main driveshaft assembly, etc.

2-299. TRANSMISSION SUPPORT STRAPS.

2-300. DESCRIPTION. There are four transmission support straps which transmit and distribute loads from the pylon and pylon supports to the cabin roof beam and the associated support structure. After removal of cabin roof sound-proof blanket the two forward support straps are readily visible. The aft support straps are visible only after removal of structural panels. Refer to figure 2-60.

2-301. INSPECTION — TRANSMISSION SUPPORT STRAPS.

a. Inspect the two forward support straps for cracks especially in critical area. Refer to figure 2-60. If crack in support strap is suspected, refer to TM 1-1520-254-23, Technical Manual Aviation Unit Maintenance (AVUM) and Aviation Intermediate Maintenance (AVIM) Manual Nondestructive Inspection Procedures for OH-58 Helicopter Series.

b. Remove structural panels (1 and 2) and inspect the two aft support straps especially in critical areas. If crack in support strap is suspected, refer to TM 1-1520-254-23, Technical Manual Aviation Unit Maintenance (AVUM) and Aviation Intermediate Maintenance (AVIM) Manual Nondestructive Inspection Procedures for OH-58 Helicopter Series.

NOTE

The most critically loaded is the left rear support strap.

2-302. ENGINE MOUNTS.

2-303. DESCRIPTION — ENGINE MOUNTS. The engine mounts (figure 2-61) are attached to the top of the engine deck. Alignment of the engine is accomplished using shims under each leg of each mount.

2-304. INSPECTION — ENGINE MOUNTS.

a. Inspect mounts for movement or damage to legs. Bends, bolt hole elongation, and cracks are cause for immediate replacement of legs. If crack in engine mount is suspected, refer to TM 1-1520-254-23, Technical Manual Aviation Unit Maintenance (AVUM) and Aviation Intermediate Maintenance (AVIM) Manual Nondestructive Inspection Procedures for OH-58 Helicopter Series.

b. Check for nicks, gouges, scratches, or chafing on the tube area of the mounts.

2-305. REMOVAL — ENGINE MOUNTS.

WARNING

Engine must be supported during replacement of one or more of the mounts.

CAUTION

If engine mounts are removed, do not remove the bonded shims. These shims directly affect engine to transmission alignment. If removal is required, mark the shims for proper location and to prevent loss or intermixing. Loose shims will be immediately rebonded back in place using adhesive (C19) or equivalent. In the event any shims become lost, a complete fuselage alignment must be accomplished to determine the proper thickness of the shims. "Loss or intermixing of shims will require depot maintenance for engine alignment. This task requires special factory tooling."

a. Remove anti-ice control and install engine lift tool (T40) on anti-icing control pad and connect to hoist. Apply only enough lift to hold engine in place.

b. Disconnect hose clamps attaching hardware to mounts.

c. Remove structural panels above electrical shelf (figure 2-60).

d. Remove bolts (4), washers (5 and 6), and nuts (7, figure 2-61) attaching engine mounts to airframe. Discard nuts (7).

e. Remove mounts from service desk making sure that shims do not come loose from deck.

2-306. INSPECTION — ENGINE MOUNTS.

a. Inspect engine mount and weld areas using magnetic particle inspection. Refer to TM 55-1500-335-23.

(1) Inspect engine mount legs (1 and 2, figure 2-61) using direct electrical contact with copper braided pads, magnetized at 800 amperes.

(2) Inspect with longitudinal field at 4,000 ampere-turns.

b. Check for wear or elongation of bolt holes and spindle attaching hole. Maximum bolts hole diameter 0.255 inches, maximum spindle hole diameter 0.380 inches. Inspect engine mount (figure 2-63).

c. Check for wear of the airframe bolt holes by checking for side play between mount and airframe around the bolt. Bolt must be finger loose for this

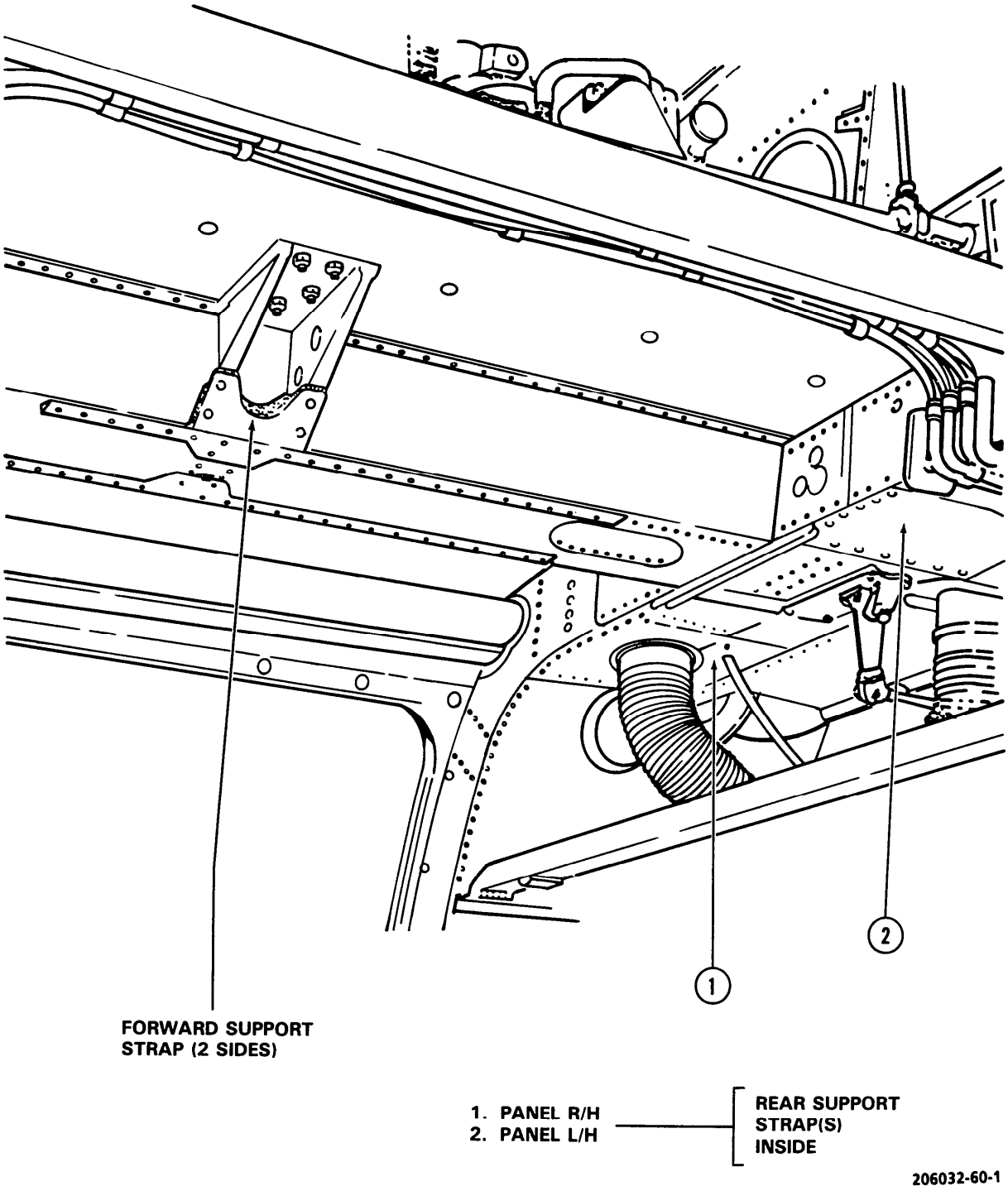

Figure 2-60. Transmission Mount Support and Access (Sheet 1 of 3)

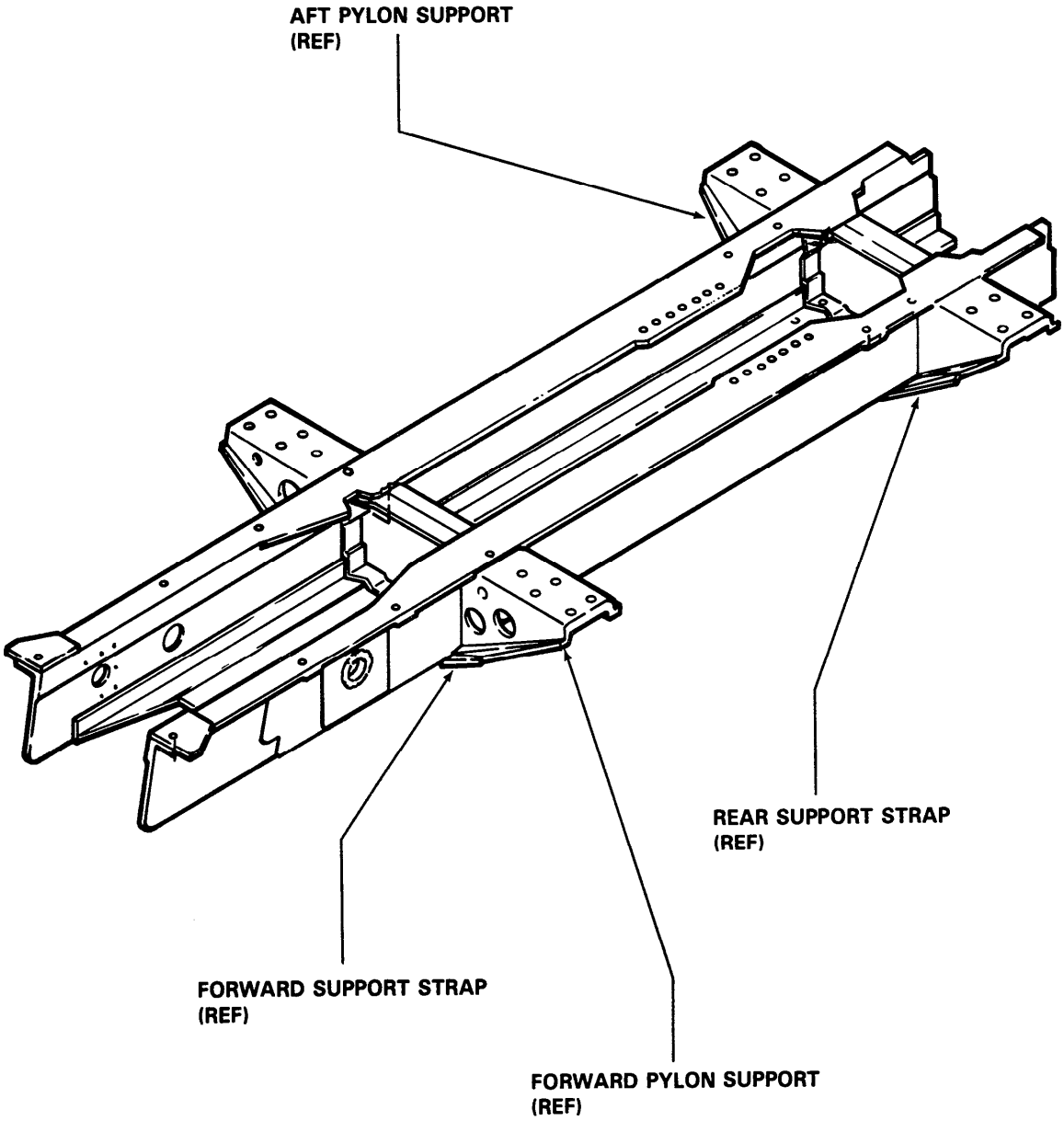

UPPER CABIN ROOF BEAM INSTALLATION – REF 206032-60-2

Figure 2-60. Transmission Mount Support and Access (Sheet 2 of 3)

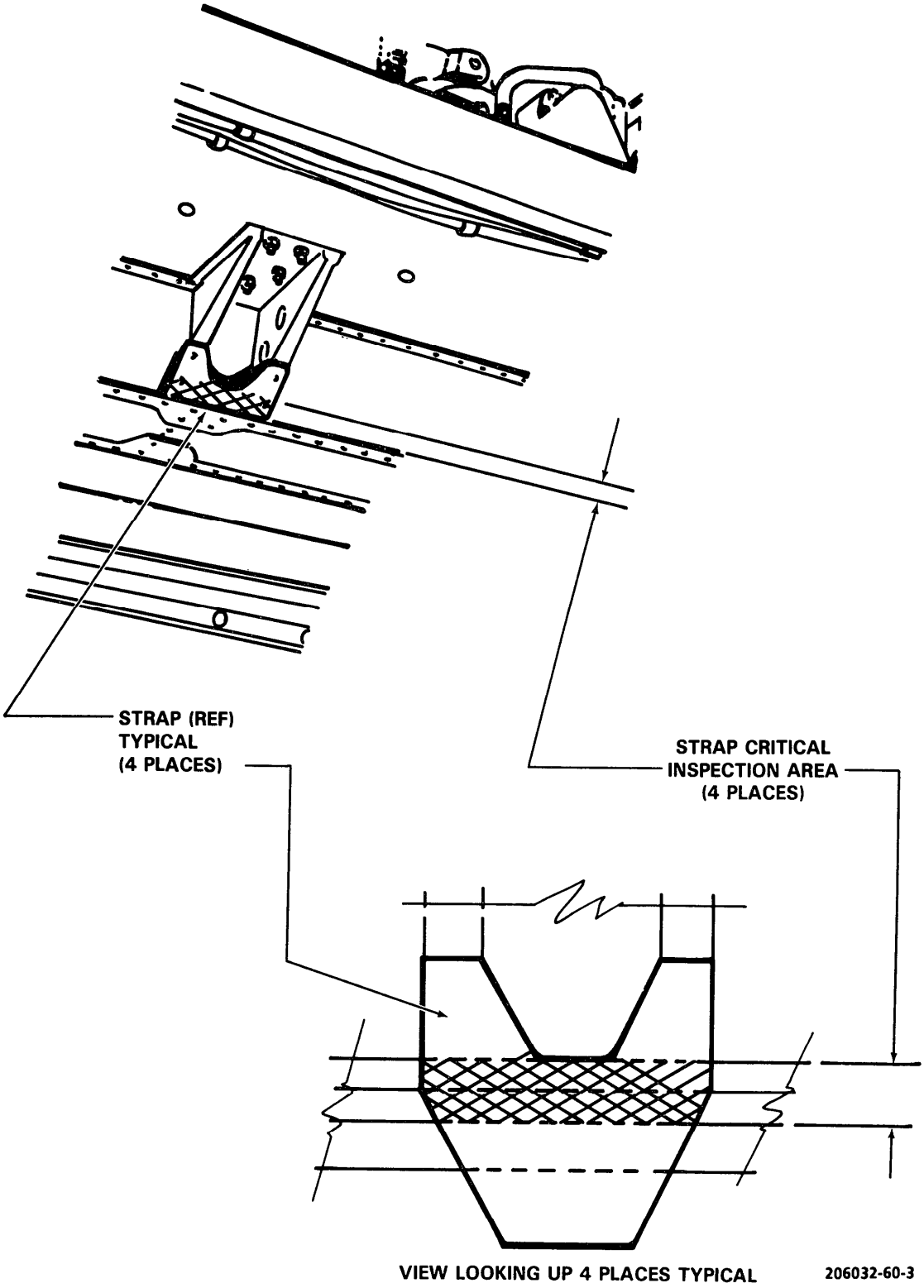

Figure 2-60. Transmission Mount Support and Access (Sheet 3 of 3)

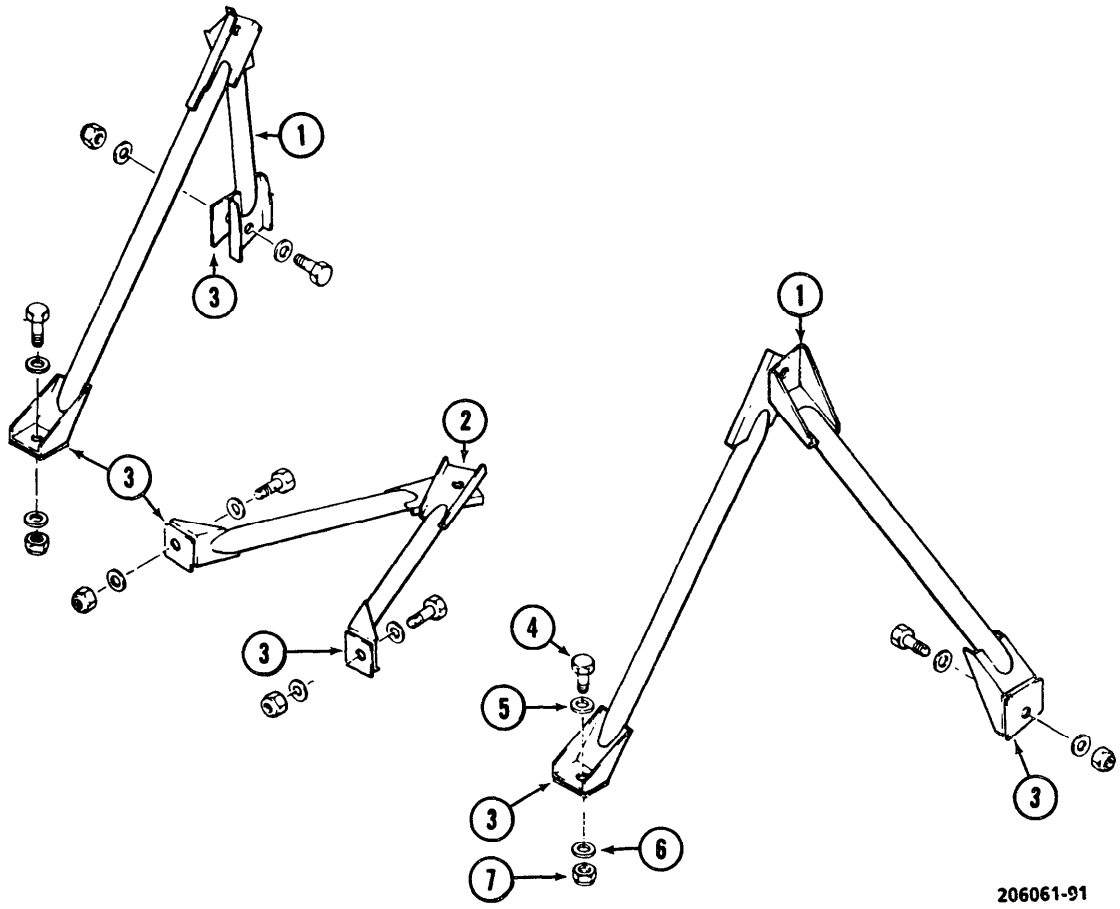

1. Side Mounts
2. Lower Mount
3. Shims (Permanent) (6 places)
4. Bolt (Typical 6 places)
5. Washer (Typical 6 places)
6. Washer (Typical 6 places)
7. Nut (Typical 6 places)

Figure 2-61. Engine Mounts

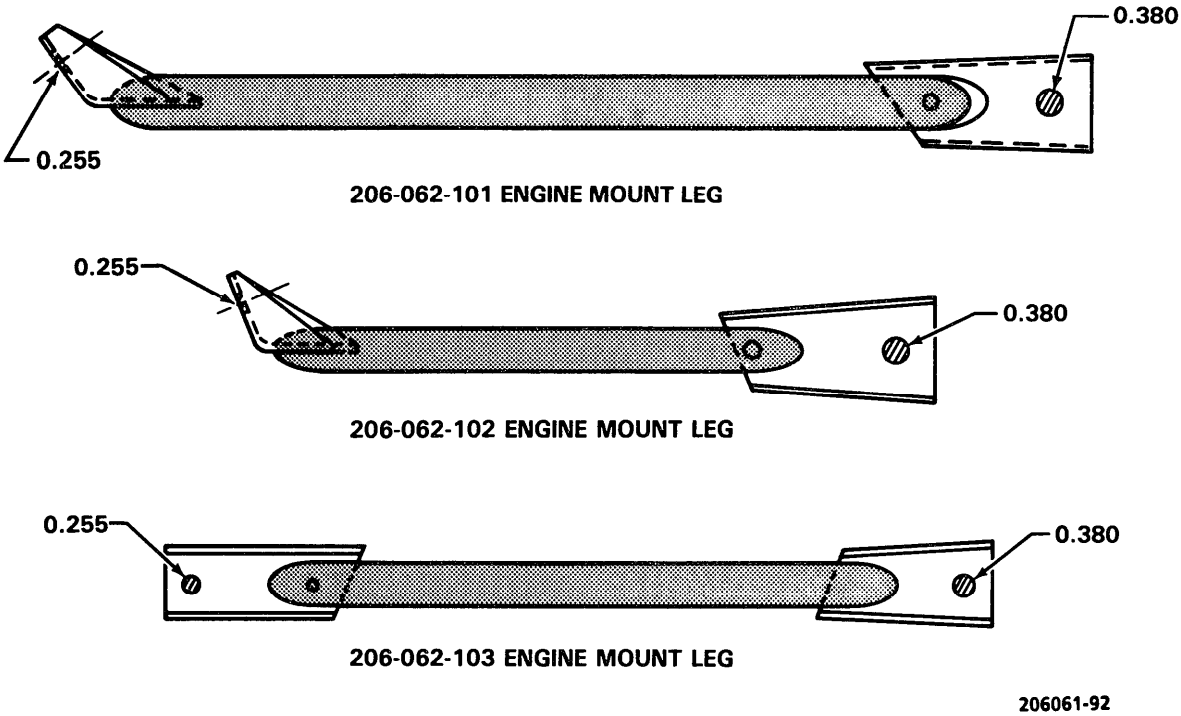

DAMAGE LOCATION SYMBOLS

TYPE OF DAMAGE		MAXIMUM DAMAGE AND REPAIR DEPTH		
NICKS, SCRATCHES	0.005 in.	1	0.002 in.	0.020 in.
DENTS	0.005 in.	2	0.004 in.	0.020 in.
CORROSION	0.003 in.	1	0.002 in.	0.010 in.
MAXIMUM AREA PER FULL DEPTH REPAIR	20% of area		10% of surface	25% of area
EDGE CHAMFER	0.010 in.		—	0.020 in.

NOTES
1. Allowable depth before and after repair.
2. Nonrepairable limit for smooth dents only. Sharp dents are not acceptable.

Figure 2-62. Engine Mount Leg — Wear and Damage Limits

206-061-104-3 ENGINE MOUNT FITTING

206061-93

DAMAGE LOCATION SYMBOLS

TYPE OF DAMAGE		MAXIMUM DAMAGE AND REPAIR DEPTH		
MECHANICAL	0.005 in.	1	0.010 in.	0.050 in.
CORROSION	0.003 in.		0.010 in.	0.025 in.
MAXIMUM AREA PER FULL DEPTH REPAIR	20 % of area		10 % of surface area	25 % of area
EDGE CHAMFER	0.010 in.		0.020 in.	0.030 in.

NOTE: 1 Applicable for both sides of flange threads.
Thread damage that does not exceed a depth of one-third of thread and length of one-quarter inch (one damage per bolt) is acceptable.

Figure 2-63. Engine Mount — Wear and Damage Limits

check. Maximum side play is **0.010** inches. If excessive play is present due to airframe wear, engineering approval is required for a special repair.

2-307. REPAIR — ENGINE MOUNTS. See figures 2-62 and 2-63.

2-308. INSTALLATION — ENGINE MOUNTS.

a. Position mount legs over shims and secure with bolts, two washers, and new nut. Length of bolt holding mount leg to airframe is determined by thickness of shims. Refer to table 2-3. Attach engine mount to engine mount fittings. Refer to paragraph 4-22.

Table 2-3. Engine Mount Leg Attaching Bolts

SHIM THICKNESS	BOLT SIZE
FWD LEGS:	
0.190 to 0.077 in (0.50 to 0.20 cms)	AN174-6A
0.076 to 0.000 in. (0.20 to 0.000 cms)	AN174-5A
REAR LEGS	
0.190 to 0.098 (0.50 to 0.25 cms)	AN174-6A
0.097 to 0.000 in. (0.25 to 0.00 cms)	AN174-5A
LOWER LEGS:	
0.190 to 0.087 in. (0.50 to 0.22 cms)	AN174-10A
0.086 to 0.000 in. (0.21 to 0.00 cms)	AN174-7A

b. Torque nut to 90 INCH-POUNDS.

NOTE

Two different type nuts may be found on this installation; the earlier NAS679 (sheet metal stamped) and the later MS21042 (forged). While either nut is acceptable, the reduced hex (0.3125 inch wrenching nut) MS21042 is preferred. Neither nut may be reused in this application and both require retorque after the first 50 hours of operation. Nuts need not be replaced at retorque. This special application has taken into account tare or drag torque. Torque wrench reading must be **90 INCH-POUNDS**.

c. Install hose clamp into the same area from which removed.

d. Lower hoist to slacken cable and remove lift tool.

e. Install anti-ice control.

2-309. SEAL FILLER ASSEMBLY.

2-310. DESCRIPTION — FIRE SUPPRESSANT FOAM ASSEMBLIES. Two foam assemblies are located on the aft side of the bulkhead at FS130. The larger foam assembly is in the avionics compartment. The other assembly is below the floor. These foam assemblies reduce the fire hazard if incendiary rounds penetrate the fuel cell from the rear.

2-311. REMOVAL — SEAL FOAM ASSEMBLY.

a. Upper foam assembly—disconnect the battery and remove two cord assemblies. Disconnect wires on the battery relay then disconnect battery vent lines. Remove foam assembly. Some helicopters have an AN/ARC-51 radio installed on a shelf mounted against the upper part of the bulkhead. The foam assembly may be removed from these helicopters by cutting the foam upward from a point midway along the cutout for the radio mount bracket and folding the sides. Seal all cuts with sealing compound (C131). Equivalent methods may be used to remove the foam assembly. However, do not cut the assembly in any manner that permits removal of a section of foam material.

b. Lower foam assembly — remove the radio antenna under the avionics compartment floor and remove cord assembly. Remove foam assembly.

2-312. INSPECTION — SEAL FOAM ASSEMBLY. Inspect foam assemblies for cuts, tears, and water saturation.

2-313. REPAIR — SEAL FOAM ASSEMBLIES. Air dry and cover tears with sealing compound (C131).

2-314. INSTALLATION — SEAL FOAM ASSEMBLIES.

a. Upper foam assembly — sprinkle talcum powers (C135) on forward side of the foam assembly and mount against bulkhead at FS 130 in the avionics compartment. Secure the two cord assemblies and attach the relay leads and vent lines. Ensure that the scarf on the forward battery vent line faces forward and the scarf on the aft vent line faces aft. Connect battery. For those aircraft with the AN/ARC-51 radio installed on a shelf mounted against the bulkhead, new foam assemblies must be reworked (figure 2-64). In addition, they may be cut to permit installation. Cut the foam upward from a point midway along the cutout for the radio mount bracket and fold the sides to install the assembly. Before sealing the assembly, mount the foam assembly in the aircraft to ensure that the length of cut is adequate for installation without cracking the protective seal on the outside surface. Some additional cutting may be required. Do not cut the foam assembly in any manner that permits removal of a section of foam material. Remove and seal all cut areas with sealing compound (C131).

b. Lower foam assembly — sprinkle talcum powder (C135) on forward side of the foam assembly and mount against the bulkhead at FS 130 below the avionics compartment floor. Secure cord assembly and replace the antenna. Connect battery.

NOTE

The upper and/or lower fire suppressant foam assemblies may be removed in noncombat areas at the discretion of the unit commander. Applicable weight and balance changes shall be made to the helicopters Weight and Balance Records. Removed foam assemblies and cords will be retained as flyaway equipment and appropriately marked.

2-315. LANDING GEAR SUPPORT FITTINGS.

2-316. DESCRIPTION — Four identical landing gear fittings are bolted to the lower fuselage. These fittings are used to install the landing gear and the float landing gear.

2-317. REMOVAL — Remove the bolts, nuts, and washers, securing the fittings to the airframe. Note that the bolts are not all the same length.

2-318. INSPECTION.

a. Corrosion cannot effect more than **20%** of surface area.

b. Corrosion pits cannot be wider than **0.060** inch and must be separated by at least **0.200** inch.

c. Wear on the fittings caused by contact and chafing from rivet collars on the landing gear cannot exceed **0.025** inch.

2-319. REPAIR.

a. Strip fitting and remove corrosion using an aluminum oxide cloth (C45). (Do not use ferrous materials on aluminum.) Not more than **10%** of local thickness can be removed.

b. Remove all burrs and sharp corners created by damage to the fitting.

c. Clean repaired area with Turco (C21), then treat with alodine (C38) and reprime with primer (C116).

d. A corroded area may be repaired only once.

2-320. INSTALLATION.

a. Use proper length of bolt and install nuts when required. Ensure bolts are installed in correct location. Install a washer under the head of each bolt and under each nut.

b. Apply a thin bead of sealant (C129) to the mating surfaces of the fitting and airframe in order to prevent water from entering the fitting recessed areas.

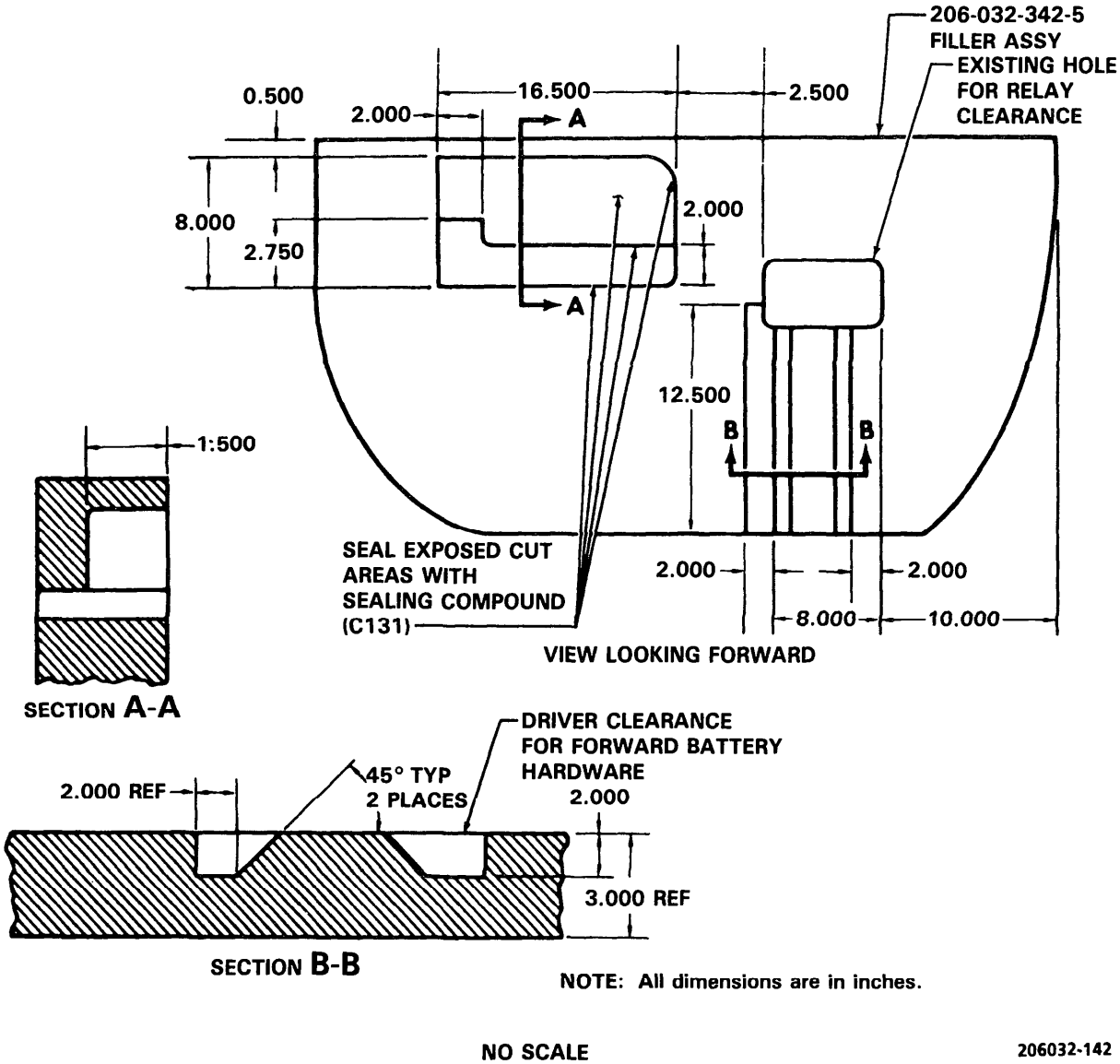

Figure 2-64. Rework Necessary if AN/ARC-51 is Mounted to Bulkhead, Seal, Foam Assembly (Fire Suppressant Foam Assemblies)

SECTION IV. WING

(Not applicable)

SECTION V. EXTRUSION CHART

(Not applicable)

SECTION VI. WIRE STRIKE PROTECTION SYSTEM

2-321. WIRE STRIKE PROTECTION SYSTEM (WSPS).

NOTE

WSPS configuration designated A also applies to OH-58C (Round Glass). WSPS configuration designated C applies only to OH-58C (Flat Glass).

2-322. DESCRIPTION — WSPS (FIGURE 2-65) A . FIGURE 2-66 C). The WSPS provides protection against impacts with horizontally strung mechanical and power transmission cables. The basic system consists of an upper cutter/deflector, a windshield protector/deflector/cutter, and a lower cutter/deflector.

2-323. SAWTOOTH BLADES, CUTTER DEFLECTORS (UPPER AND LOWER).

2-324. DESCRIPTION — SAWTOOTH BLADES, CUTTER DEFLECTOR UPPER AND LOWER. The sawtooth blades (1 and 8, figure 2-65 A) and (1 and 8, figure 2-66 C) provide abrasion of wires leading into primary wire cutting blades.

2-325. INSPECTION SAWTOOTH BLADES, CUTTER DEFLECTOR, (UPPER AND LOWER). Inspect the sawtooth blades (1 and 8; figure 2-65 A) and (1 and 8, figure 2-66 C) for impact damage and/or shedding of the rubber coating. Sawblades with missing or damaged teeth (one or more) are to be replaced without repair.

2-326. REMOVAL — SAWTOOTH BLADES, CUTTER DEFLECTOR (UPPER).

a. Remove rivets (1, figure 2-67 A) (9, figure 2-77 C) retaining sawblade.

b. Remove upper sawblade (2, figure 2-67 A) (10, figure 2-77 C).

2-327. REMOVAL — SAWTOOTH BLADES CUTTER DEFLECTOR (LOWER).

a. Remove rivets (1, figure 2-67) retaining sawblades.

b. Remove sawblade (3) and clean sealant residue. Refer to TM 43-0105.

2-328. REPAIR — SAWTOOTH BLADES, CUTTER DEFLECTOR (UPPER AND LOWER). Damaged or missing rubber coating due to deterioration can be replaced using sealing compound (C130).

2-329. INSTALLATION — SAWTOOTH BLADES CUTTER DEFLECTOR (UPPER).

a. Install sawblade (2, figure 2-67 A) (10, figure 2-77 C) with teeth facing cutter throat.

b. Install rivets (1, figure 2-67 A) (9, figure 2-77 C).

c. Mask aluminum deflector on each side of the sawblade and coat sawblade teeth with a minimal application of sealing compound (C130). Allow sufficient time for sealing compound to set before removing masking.

2-330. INSTALLATION — SAWTOOTH BLADES, CUTTER DEFLECTOR (LOWER).

a. Install sawblade (3, figure 2-67) with teeth facing cutter throat.

b. Install rivets (1).

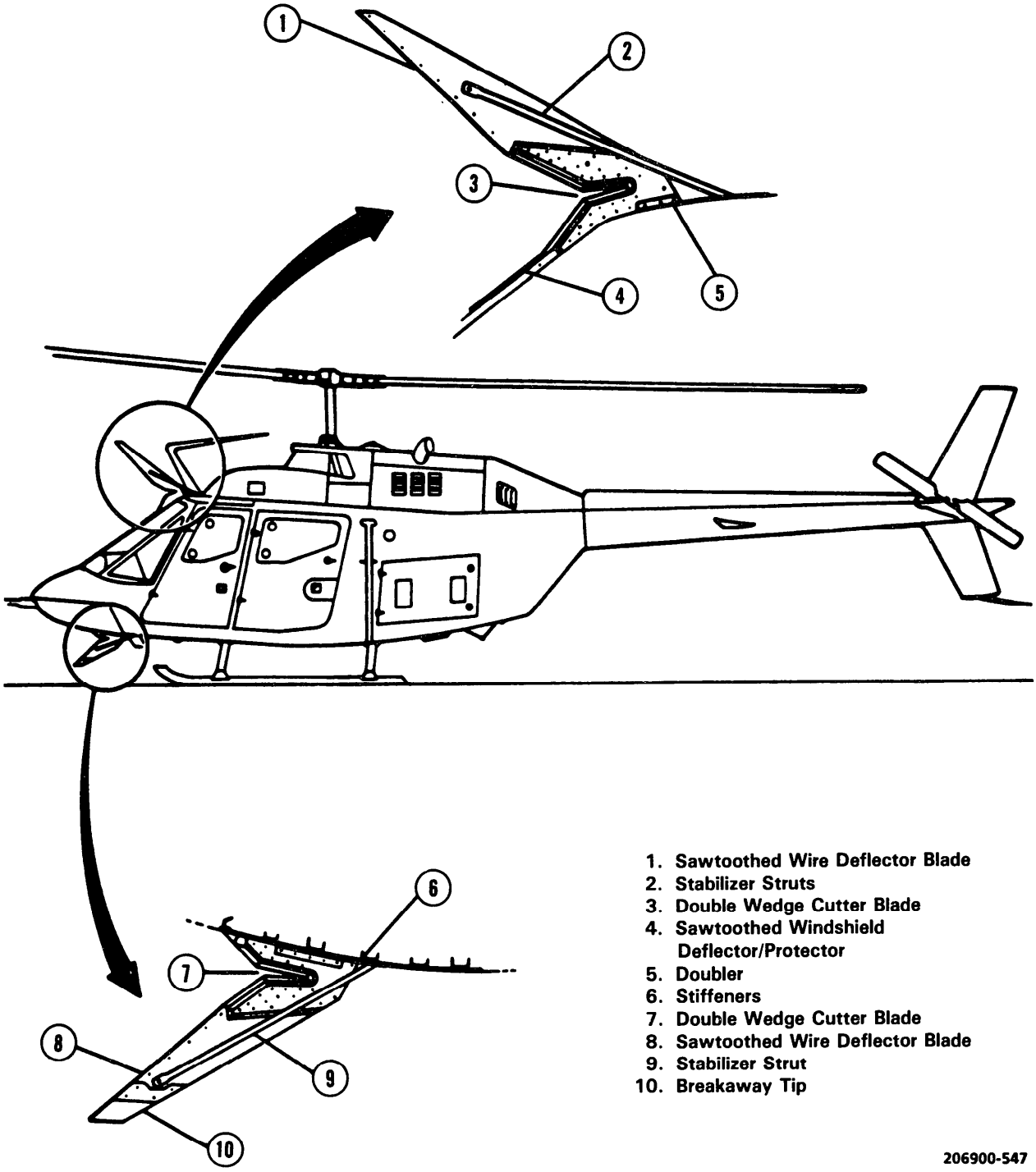

Figure 2-65. Wire Strike Protection System (WSPS) Configuration A

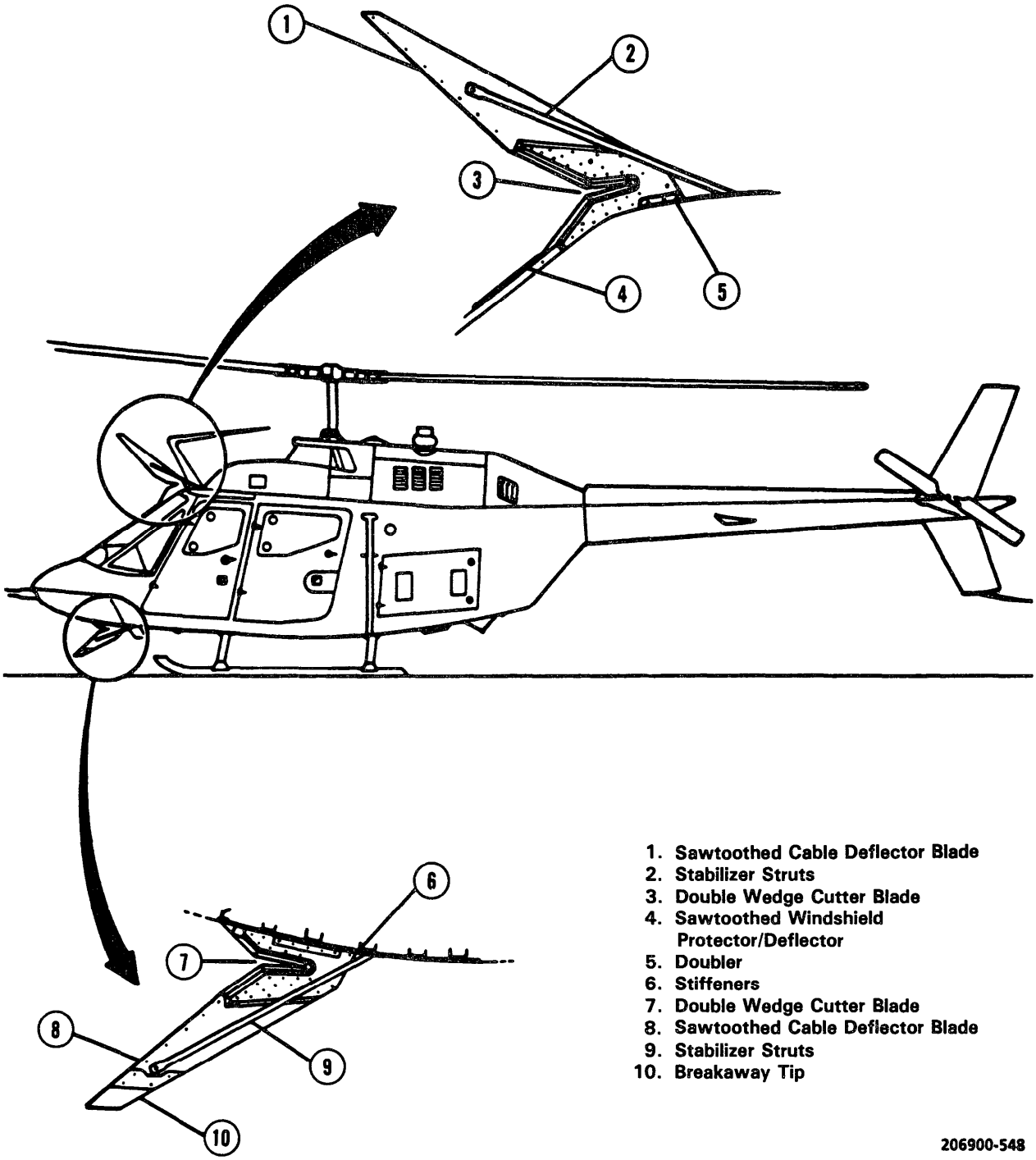

Figure 2-66. Wire Strike Protection System (WSPS) Configuration C

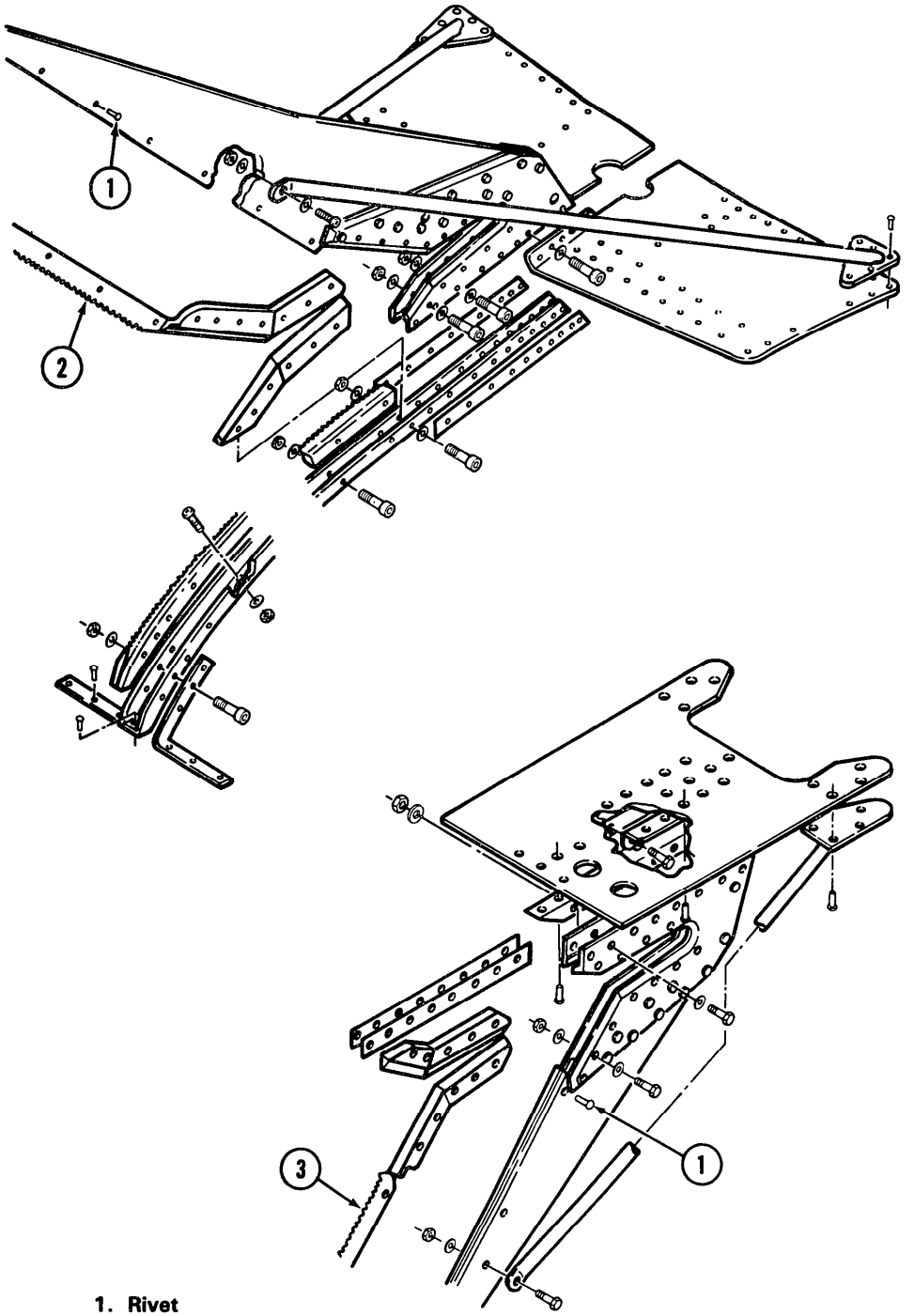

1. Rivet
2. Sawblade, Upper
3. Sawblade, Lower

206900-549

Figure 2-67. Removal — Sawblade, Cutter Deflector (Upper and Lower)

c. Mask aluminum deflector on each side of sawblade and coat the sawblade teeth with a minimal application of sealing compound (C130). Allow sufficient time for the sealing compound to set before removing masking.

d. Prime/paint as required. Refer to TM 55-1500-345-23.

2-331. CUTTER BLADES (UPPER AND LOWER).

2-332. DESCRIPTION — CUTTER BLADES (UPPER AND LOWER). The cutter blades (3 and 7, figure 2-65 A , 3 and 7, figure 2-66 C) provide the primary wire cutting mechanism, consisting of wedge type cutting blades positioned to provide the necessary mechanical advantage to cut the wires/cables while minimizing load input into the airframe.

2-333. INSPECTION — CUTTER BLADES (UPPER AND LOWER). Inspect the cutting blades for evidence of reduced sharpness due to nicks, abrasions and/or shedding of the rubber coating. Blades with any nicks or abrasions on the cutting edge are to be replaced.

2-334. REMOVAL — CUTTER BLADES (UPPER).

a. Remove capscrews (1, figure 2-68 A) (1, figure 2-78 C), washers (2) and nuts (3) of the blade to be removed. Cutter throat blade removal may require removal of entry guide blade(s) (4, figure 2-68 A , 4, figure 2-78 C).

b. Remove entry guide blade(s) (4, figure 2-68 A , 4, figure 2-78 C), and cutter blades (8) from the cutter assembly, noting position of shims (5, figure 2-68 A , 5, figure 2-78 C) and (9) (shims may have been utilized to centralize the cutter blades).

c. Clean sealant from the shim(s) and cutter assembly. Refer to TM 43-0105.

2-335. REMOVAL — CUTTER BLADES (LOWER).

a. Remove capscrews (1, figure 2-68), washers (2), and nuts (3) of the blade to be removed.

b. Remove entry guide blades (6) and cutter blades (10) from the cutter assembly, noting position of shims (7) and (11) (shims may have been used to centralize the cutter blades).

c. Clean sealant from the shim(s) and cutter assembly. Refer to TM 43-0105.

2-336. REPAIR — CUTTER BLADES (UPPER AND LOWER). Damaged or missing rubber coating due to deterioration can be replaced by applying a thin coat of sealing compound (C130).

2-337. INSTALLATION — CUTTER BLADES (UPPER)

a. Apply sealing compound (C130) to the entry guide blades (4, and cutter blades 8, figure 2-68 A and figure 2-78 C) and (8) and position in cutter assembly (12, figure 2-68 A , figure 2-78 C) shims must be installed on the same side of the blade noted during removal.

b. Install capscrews (1, figure 2-68 A , figure 2-78 C) washers (2), and nuts (3). Where cutter throat blades have been removed check gap of junction of aft portion of cutter throat blades — maximum allowable gap is **0.020** inch.

c. Clean excess sealant and prime as required. Refer to TM 55-1500-345-23.

2-338. INSTALLATION — CUTTER BLADES (LOWER).

a. Apply sealing compound (C130) to the entry guide blades (6, figure 2-68) and cutter blades (10) and position in cutter assembly (13) shims must be installed in the same side of the blade noted during removal.

b. Install capscrews (1), washers (2), and nut (3) where cutter blades have been removed. Check gap of junction of aft portion of cutter throat blades — maximum allowable gap is **0.020** inch.

c. Clean excess sealant and prime/paint as required. Refer to TM 55-1500-345-23.

2-339. STRUT ASSEMBLIES (UPPER AND LOWER).

2-340. DESCRIPTION — STRUT ASSEMBLIES (UPPER AND LOWER). The strut assemblies (2, figure 2-65 A , 2, figure 2-66 C) and (9) provide the necessary lateral support to the cutter/deflector assemblies during asymmetric loading.

2-341. INSPECTION — STRUT ASSEMBLIES (UPPER AND LOWER).

a. Inspect the strut assemblies for paint deterioration, superficial paint scratches, and light corrosion. No moderate or heavy corrosion allowed.

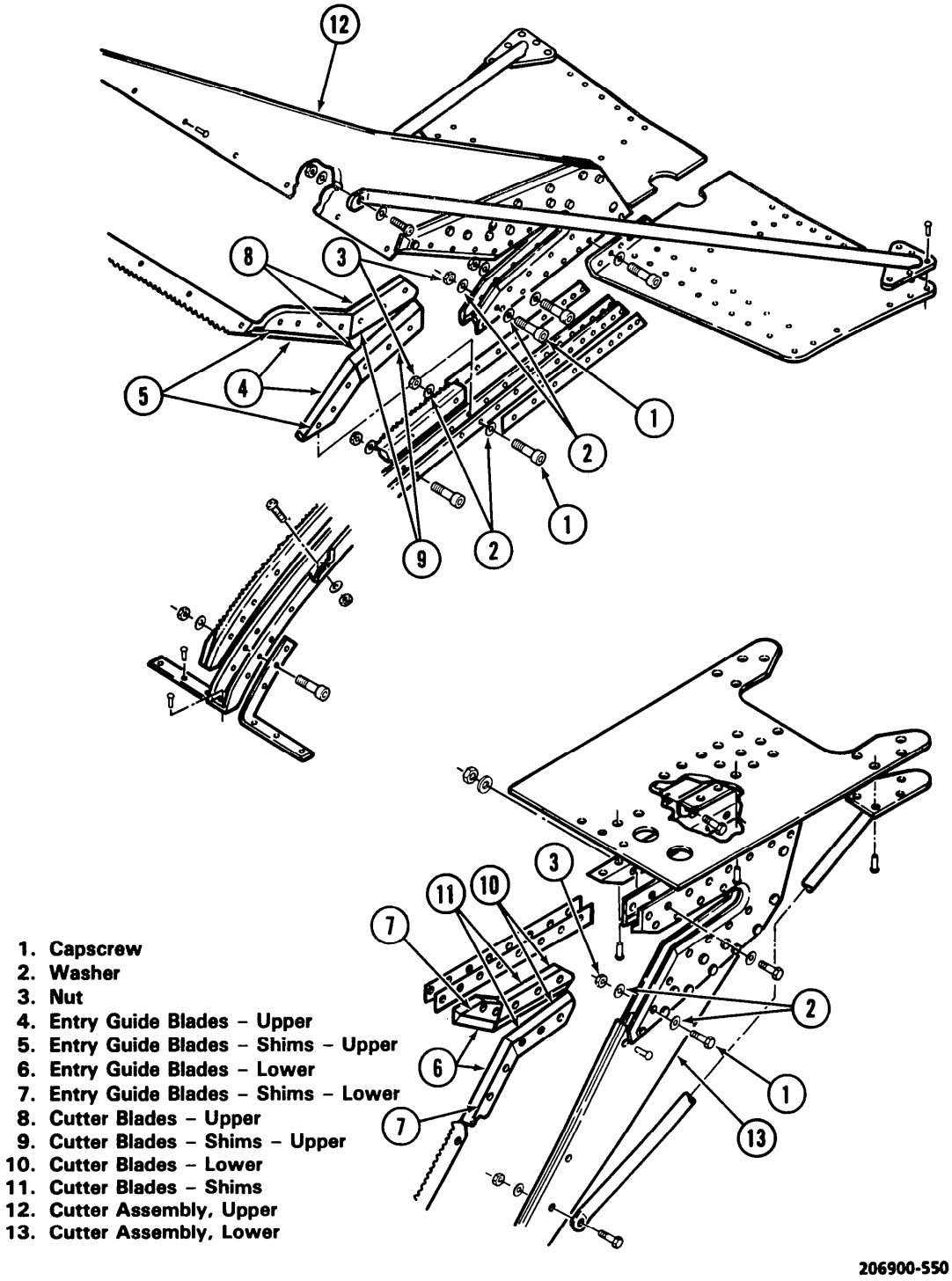

Figure 2-68. Removal — Cutter Blades (Upper and Lower)

b. Inspect the strut assemblies for cracks particularly in the welded areas and the formed tab ends. Strut assemblies showing evidence of any cracks must be replaced.

c. Inspect the strut assemblies for deformation at the strut/deflector attachment area and the foot pad area. Strut assemblies showing evidence of permanent deformation must be replaced.

d. Inspect strut assemblies for tube straightness. Maximum allowable bow over strut length is **0.060** inch. Strut assemblies exceeding this maximum must be replaced.

e. Inspect the security of the strut assemblies. Loose rivets must be replaced.

2-342. REMOVAL — STRUT ASSEMBLY, UPPER.

a. Remove rivets (1, figure 2-69) securing strut assembly foot pads to the aircraft.

b. Remove strut attachment bolt (3, figure 2-69) washers (4) and nut (5).

c. Clean sealant from strut assembly foot pads. Refer to TM 43-0105.

2-343. REMOVAL — STRUT ASSEMBLIES, LOWER.

a. Remove rivets (2, figure 2-69) securing strut assembly foot pads to the doubler (8). To remove the lower strut assembly foot pad rivets, the lower cutter assembly must be removed from the aircraft. Refer to paragraph 2-337.

b. Remove strut attachment bolt (3), washer (4), and nut (5).

c. Clean sealant from strut assembly foot pads. Refer to TM 43-0105.

2-344. REPAIR — STRUT ASSEMBLIES.

a. Paint deterioration or superficial paint scratches in accordance with TM 55-1500-345-23.

b. Light corrosion — clean and repair area as per TM 43-0105.

2-345. INSTALLATION — STRUT ASSEMBLIES, UPPER.

a. Attach strut assemblies (6, figure 2-69), to the cutter assembly, using strut attachment bolt (3), washer (4), and nut (5).

b. Apply sealing compound (C129) to the strut feet. Reposition the struts and rivet the feet into position. Reinstall and tighten strut attachment bolt (3), washer (4), and nut (5).

2-346. INSTALLATION — STRUT ASSEMBLIES, LOWER.

a. Attach strut assemblies (7, figure 2-69) to the cutter assembly, using strut attachment bolt (3), washer (4), and nut (5).

b. Locate each strut foot, position over holes and mark through from underneath. Remove and drill holes. Clean and deburr.

c. Reposition the struts and rivet feet into position. Reinstall and tighten strut attachment bolt (3), washer (4), and nut (5).

d. Prime/paint as required. Refer to TM 55-1500-345-23.

2-347. UPPER CUTTER ASSEMBLY.

2-348. DESCRIPTION — UPPER CUTTER ASSEMBLY. The mechanical cutter/deflector consists of a sawtooth equipped deflector section (1, figure 2-65 **A**, 1, figure 2-66 **C**), providing deflection/abrading feature leading into the primary cable cutting mechanism-wedge type cutting blades (3, figure 2-65 **A**, 3, figure 2-66 **C**), positioned to provide the necessary mechanical advantage to cut the wires/cables while minimizing load input into the airframe.

2-349. INSPECTION — UPPER CUTTER ASSEMBLY.

a. Inspect the cutter assembly for paint deterioration, superficial paint scratches, and light corrosion. No moderate or heavy corrosion allowed. Scratches, nicks, or gouges, to a depth of **0.010** inch may be repaired.

b. Inspect the sawblade. Refer to paragraph 2-325.

c. Inspect the cutter blades. Refer to paragraph 2-333.

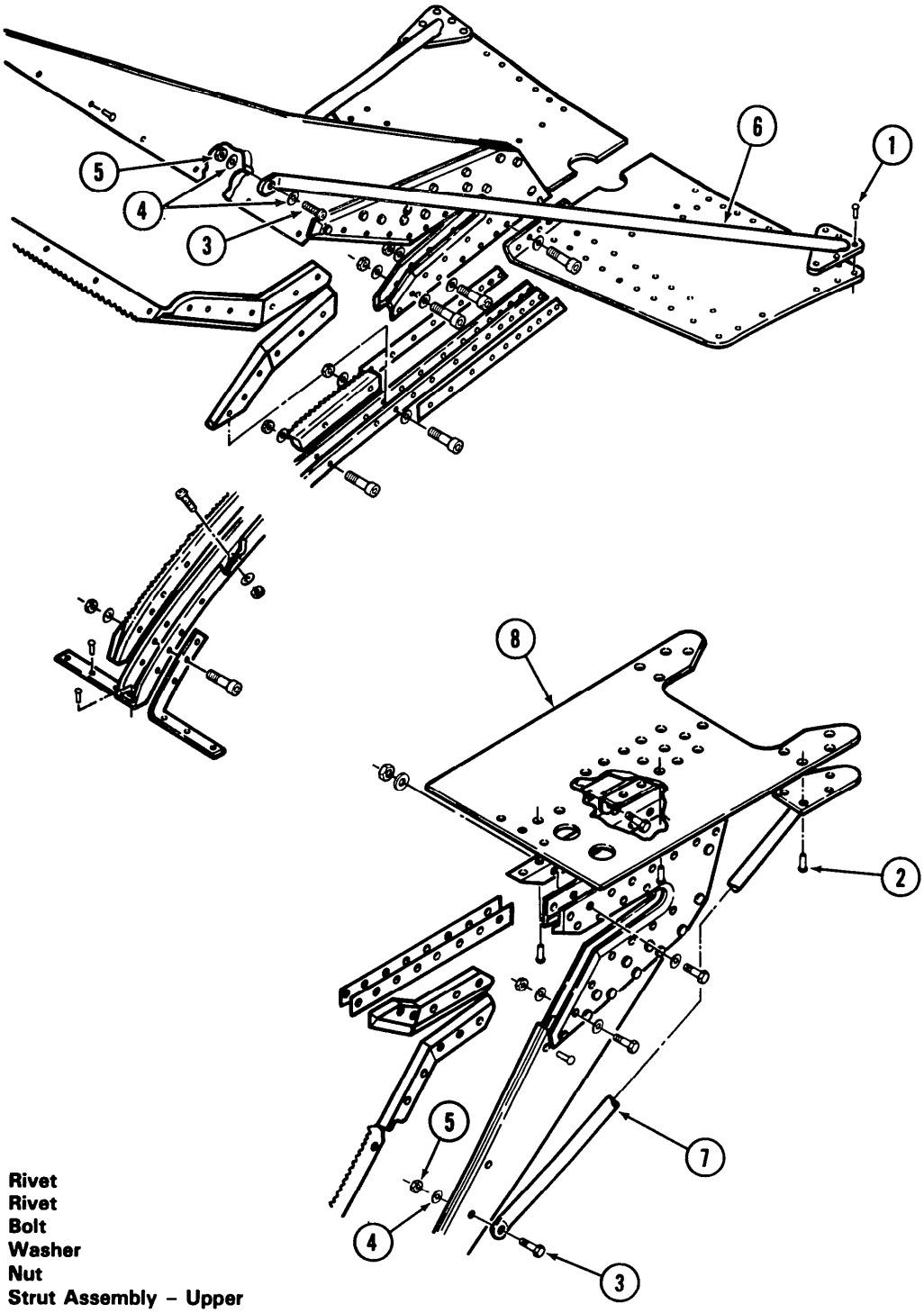

1. Rivet
2. Rivet
3. Bolt
4. Washer
5. Nut
6. Strut Assembly – Upper
7. Strut Assembly – Lower
8. Doubler

Figure 2-69. Removal — Strut Assemblies (Upper and Lower)

d. Inspect the deflector assembly for cracks and permanent deformation. Deflector assemblies showing evidence of any cracks and/or permanent deformation must be replaced. Scratches, nicks, and gouges to a depth of **0.010** inch may be repaired.

e. Inspect the security of the upper cutter assembly. Loose rivets must be replaced.

f. Inspect the surrounding support structure for evidence of permanent deformation. If permanent structural deformation exists replace the entire cutter assembly.

2-350. REMOVAL — UPPER CUTTER ASSEMBLY.

a. Remove forward lower entry guide blade (1), shim (2, figure 2-70 A , figure 2-79 C), per paragraph 2-334.

b. Remove strut attachment bolts (3, figure 2-70 A , figure 2-79 C) washers (4), and nut (5) from deflector.

c. Remove lower mounting capscrews (6, figure 2-70 A , figure 2-79 C) washers (7), and nuts (8).

d. Remove the cutter assembly (9, figure 2-70 A , figure 2-79 C) noting position of shims (10), if installed.

e. Clean sealant from shims (10) mounting channel (11) and cutter assembly (9, figure 2-70 A , figure 2-79 C). Refer to TM 43-0105.

2-351. REPAIR — UPPER CUTTER ASSEMBLY.

a. Paint deterioration or superficial paint scratches in accordance with TM 55-1500-345-23.

b. Light corrosion — Clean and repair area in accordance with TM 43-0105.

c. Sawblade — Refer to paragraph 2-328.

d. Cutter blades — Refer to paragraph 2-336.

e. Using sandpaper (C106) remove scratches to maximum depth of **0.010** inch. Prime/paint in accordance with TM 55-1500-345-23.

2-352. INSTALLATION — UPPER CUTTER ASSEMBLY.

a. Position the cutter assembly (9, figure 2-70 A , 9, figure 2-79 C) into the top end of the channel (11). Check the gap between the outer sides of the channel and the cutter assembly cheek plates. Shim as required. Ensure that the cutter assembly is positioned centrally within the channel and perpendicular to the airframe. Ensure the back of the cutter is flush with the end of the channel and that the front end is pushed down and bottoming in the channel.

b. Locate the second hole from the forward end of the cutter cheek plate (12) and drill through the cheek plate (12) and through the channel (11). Align using a capscrew (6).

c. Pull the cutter back until it bottoms in the channel and drill through the cutter cheek plates (12) and channel (11) at the aft lower hole position. Align using a capscrew (6).

d. Drill the remaining cutter attachment holes.

e. Remove, clean, and deburr the cutter assembly.

f. Apply sealing compound (C131) to cutter assembly (9), and shims (10). Use sealing compound (C129) on airframe doubler mounting surfaces. Position cutter and shims. Install capscrews (6), washers (7), and nuts (8).

g. Clean off excess sealant.

h. Install strut attachment bolt (3), washers (4), and nut (5).

i. Install forward lower entry guide blade (1) and shim (2). Refer to paragraph 2-337.

j. Prime/paint in accordance with TM 55-1500-345-23.

2-353. DOUBLERS, UPPER CUTTER.

2-354. DESCRIPTION — DOUBLERS.

The doublers (5, figure 2-65 A , 5, figure 2-66 C) provide additional structural support, distributing wire cutting loads to the canopy frame members.

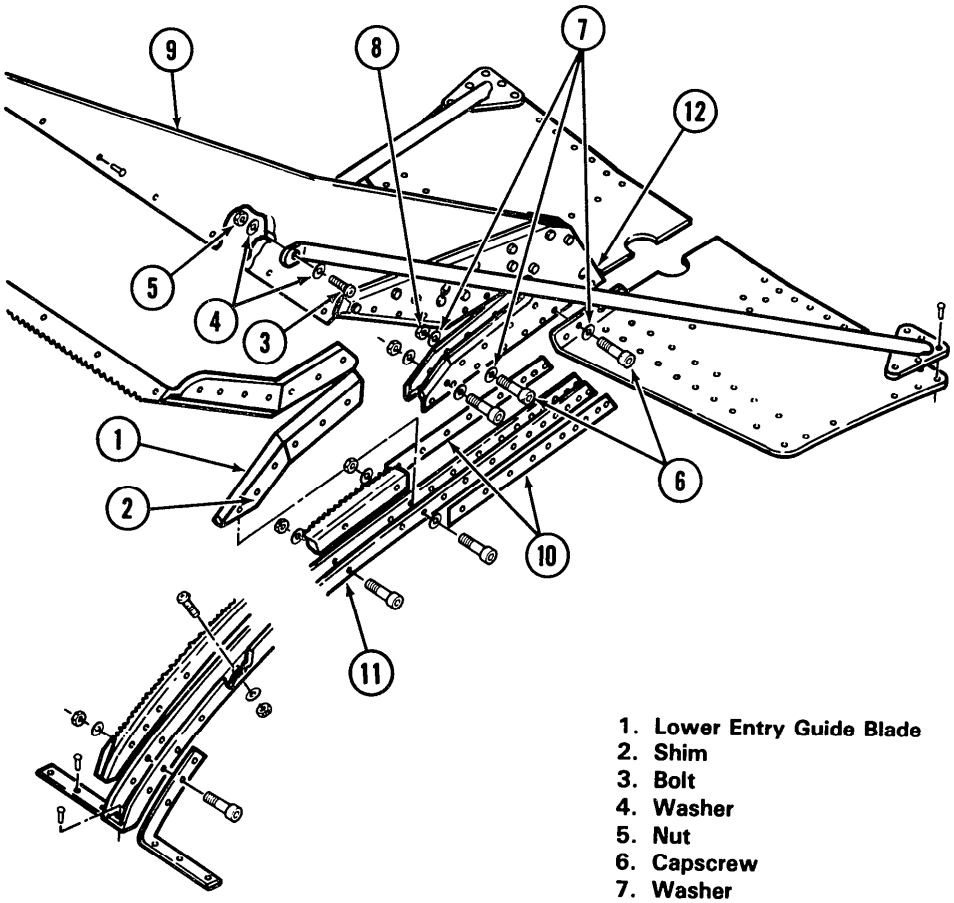

1. Lower Entry Guide Blade
2. Shim
3. Bolt
4. Washer
5. Nut
6. Capscrew
7. Washer
8. Nut
9. Cutter Assembly
10. Shim
11. Mounting Channel
12. Cheek Plate

206900-552

Figure 2-70. Removal — Upper Cutter Assembly

2-355. INSPECTION — DOUBLERS.

a. Inspect the doublers for paint deterioration, superficial paint scratches, and light corrosion. No moderate or heavy corrosion allowed. Scratches, nicks, or gouges to a depth of **0.006** inch may be repaired.

b. Inspect the doublers for cracks and permanent deformation. Doublers showing evidence of any cracks and/or permanent deformation must be replaced.

c. Inspect the security of the doubler. Loose rivets must be replaced.

2-356. REMOVAL — DOUBLERS.

a. Remove strut assemblies (1, figure 2-71 A 1, figure 2-77 C) as per paragraph 2-342.

b. Remove 5 A and 3 C aft capscrews (6), washers (7), and nuts (8).

c. Remove left and right side upper soundproofing blankets.

d. Cover windshield and overhead windows with suitable material to prevent damage. Mask edges.

e. Remove the FM ARC114 antenna. Mask mounting holes.

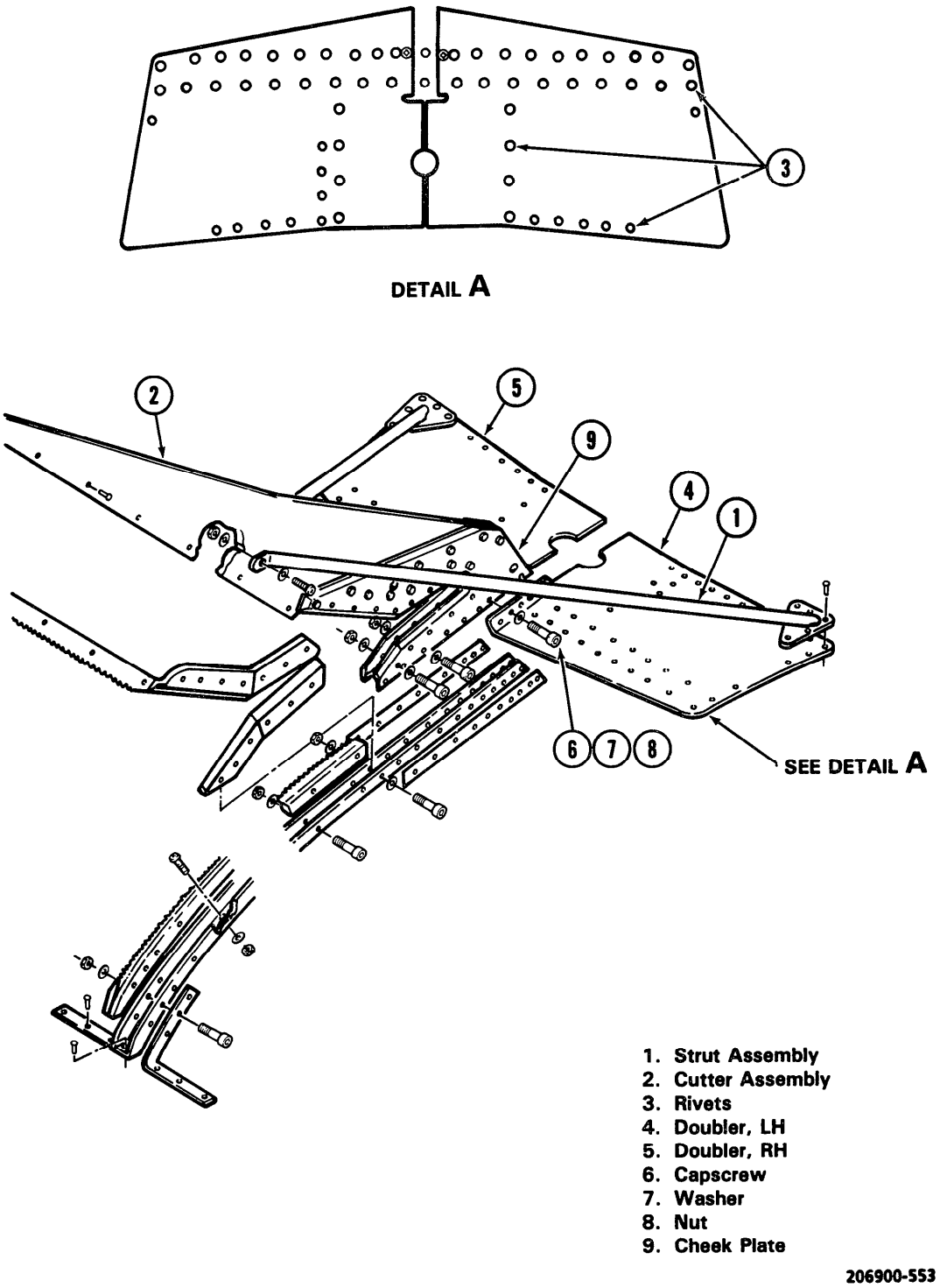

Figure 2-71. Removal — Doublers A

f. Cover back of circuit breaker panel with suitable material to prevent metal particles from entering electrical area. Mask over cable access holes to instrument panel and the ram air inlet grill.

CAUTION

Care must be exercised when drilling out rivets to prevent damage to electrical wiring.

g. Remove doubler rivets (3).

h. Remove doubler (4 and 5, figure 2-71 **A** figure 2-77 **C** .

i. Clean sealant from the helicopter. Refer to TM 43-0105.

2-357. REPAIR — DOUBLERS.

a. Paint deterioration and/or superficial paint scratches in accordance with TM 55-1500-345-23.

b. Light corrosion — Clean and repair area as per TM 43-0105.

c. Using sandpaper (C124) remove scratches to a maximum depth of **0.006** inch. Prime/paint in accordance with TM 55-1500-345-23.

2-358. INSTALLATION — DOUBLERS.

a. Position doublers (4 and 5) so that flanges cover the five aft bolt holes (figure 2-71 **A**) and three aft bolt holes (figure 2-77 **C**) in the cutter assembly (2, figure 2-71). Ensure that edge distance is maintained.

b. Trim the doubler flanges as required to match cutter assembly and to clear the FM ARC114 antenna base.

c. Position one doubler and holding firmly in place, drill the forward hole through the doubler flange by back drilling through the cutter cheek plates (9). Repeat for other doubler. Secure doublers in place using capscrew (6) and nut (8).

d. From inside the cockpit area, locate and mark the FM ARC114 antenna cable access holes. Locate all other rivet holes with a hole finder and drill.

e. Remove one doubler and with the other doubler held firmly in position with clecos, drill the four **A** two **C** remaining holes in the doubler flange by back drilling through the cutter cheek plates. Repeat for other doubler.

f. Remove the doublers. Cut and dress the antenna cable access hole and enlarge the antenna mounting bolt holes. Clean and deburr.

g. Apply sealant (C129) to the base of the doubler and position using cleco fasteners. Install the five aft capscrews **A** (6) and three aft capscrews **C** (6), washers (7), and nuts (8). Install rivet fasteners (3).

h. Clean access sealant from the doubler. Refer to TM 43-0105.

i. Install the FM ARC114 antenna. Apply sealing compound (C130) around the base of the antenna.

j. Install strut assemblies as per paragraph 2-345.

k. Prime/paint in accordance with TM 55-1500-345-23.

l. Remove the circuit breaker panel and glareshield covering and thoroughly clean up the cockpit interior.

m. Remove the windshield and overhead window covering, close the circuit breaker panel and reinstall soundproofing blankets.

2-359. WINDSHIELD DEFLECTOR ASSEMBLY.

2-360. DESCRIPTION — WINDSHIELD DEFLECTOR ASSEMBLY. The windshield protector/deflector/cutter, consisting of a sawtooth equipped aluminum extrusion, provides deflection mechanism into the upper cutter while simultaneously abrading thus weakening the wire/cable and provides additional structural support for the upper cutter mounting.

2-361. INSPECTION — WINDSHIELD DEFLECTOR ASSEMBLY.

a. Inspect the deflector assembly for paint deterioration, superficial paint scratches, and light corrosion. No moderate or heavy corrosion allowed. Scratches, nicks, or gouges in the channel and/or insert only to a depth of **0.010** inch may be repaired.

b. Inspect the security of the windshield deflection system paying particular attention to the clips at the base of the windshield. If clips or windshield deflector components show evidence of any cracking or permanent deformation due to impact they must be replaced. Inspect for gaps between the clips and the base of the windshield. No gaps are permitted; trim and/or replace as required. Inspect the sawtooth blade for impact damage and/or shedding of rubber coating. Sawblades with missing or deformed teeth (one or more) shall be replaced.

c. Inspect the windshield deflector, Figure 2-65 item 4, to make sure it is properly installed:

(1) Inspect the base of the deflector to make sure the channel, Figure 2-72 item 10, does not extend past the angle clip, Figure 2-72, item 12.

(2) Inspect the base of the deflector to make sure the insert, Figure 2-72 item 4, does not extend past the angle clip, Figure 2-72 item 12.

(3) If either the channel or the insert extends past the angle, the affected part must be reworked. See Figure 2-72.1, Detail A, for a correctly installed assembly.

2-362. REMOVAL — WINDSHIELD DEFLECTOR ASSEMBLY. Refer to paragraphs 2-365 and 2-367.

2-363. REPAIR—WINDSHIELD DEFLECTOR ASSEMBLY.

a. Paint deterioration or superficial paint scratches in accordance with TM 55-1500-345-23.

b. Light corrosion — Clean and repair area as per TM 43-0105.

c. Sawblade — Refer to paragraph 2-328.

d. Using sandpaper (C124) remove scratches to a maximum depth of **0.010** inch. Prime/paint as required in accordance with TM 55-1500-345-23.

2-364. INSTALLATION — WINDSHIELD DEFLECTOR ASSEMBLY. Refer to paragraphs 2-366 and 2-368.

2-365. REMOVAL — SAWTOOTH INSERT.

a. Remove insert retaining screws (1), washers (2), and nuts (3) (figure 2-72 **A**) retaining screws (12), washer (13), and nuts (14) (figure 2-79 **C**).

b. Remove insert assembly (4) **A** (15 **C** from channel 10) **A** , (11) **C** .

2-366. INSTALLATION — SAWTOOTH INSERT.

a. Position insert assembly (4, figure 2-72 **A**) (15, figure 2-79 **C**) into channel (10) **A** and (11) **C** . Ensure assembly is bottoming in the channel and the mounting holes are aligned.

b. Install insert retaining screws (1), washers (2), and nuts (3) **A** and retaining screws (12), washers (13), and nut (14) **C** . Note sawteeth should face forward.

c. Prime/paint as required. Refer to TM 55-1500-345-23.

2-366.1. REWORK — SAWTOOTH INSERT. If insert (Figure 2-72, item 4) is found to extend beyond channel (Figure 2-72.1, Detail C), rework the parts as described below:

a. Inspect the Channel (Figure 2-72, item 10) to make sure it does not extend past the angles (Figure 2-72, item 12). If the channel extends past the angles rework the channel first, refer to paragraph 2-361 (c).

b. Scribe a line at the end of insert, flush with the end of the channel.

c. Remove screws retaining the insert in the channel. Remove insert from channel.

d. Trim end of insert to line so that it no longer protrudes.

e. Prime and paint rework area of insert to match existing finish.

f. Re-install insert using existing fasteners.

2-367. REMOVAL — CHANNEL.

a. Remove insert assembly as described in paragraph 2-365.

b. Remove upper cutter assembly as described in paragraph 2-350.

c. Cover windshield and overhead windows with suitable material to prevent damage. Mask edges.

d. Remove all cable clamps from the wire bundles running down the windshield center post and the forward clamp on the circuit breaker panel. Lower bundles as far as possible without disconnecting.

e. Cover back of circuit breaker panel with suitable material to prevent metal particles from entering electrical area. Mask over cable access holes to instrument panel and the ram air inlet grill.

f. Remove rivet (5, figure 2-72 A), (16, figure 2-79 C) at lower end and rivets (6) A and (17) C at the upper end of channel (10) A and (11) **C**.

g. Remove channel attachment screws (7), washers (8), nuts (9), remove channel (10) A . Remove channel attachment rivets (16) C and channel (11) C .

h. Remove rivets (11) A and (18) C retaining lower angle clips and remove clips (12) A and (19) C .

i. Clean sealant from helicopter, angle clips, and channel. Refer to TM 43-0105.

2-368. INSTALLATION — CHANNEL A .

a. Using a template and a hole finder, locate and drill the lower twelve holes in the windshield center post through the template.

b. Position the template on channel (10, figure 2-72) and transfer the holes from the template to the channel section.

c. Position the channel (10) using cleco fasteners. Ensure channel is centrally located. Back drill the remaining holes in the channel.

d. Countersink to accommodate retaining screws (7).

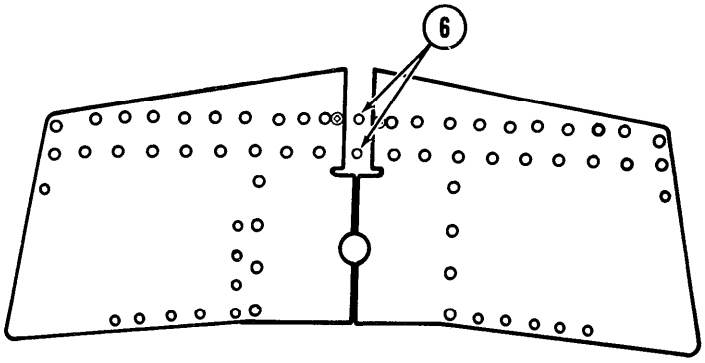

DETAIL A

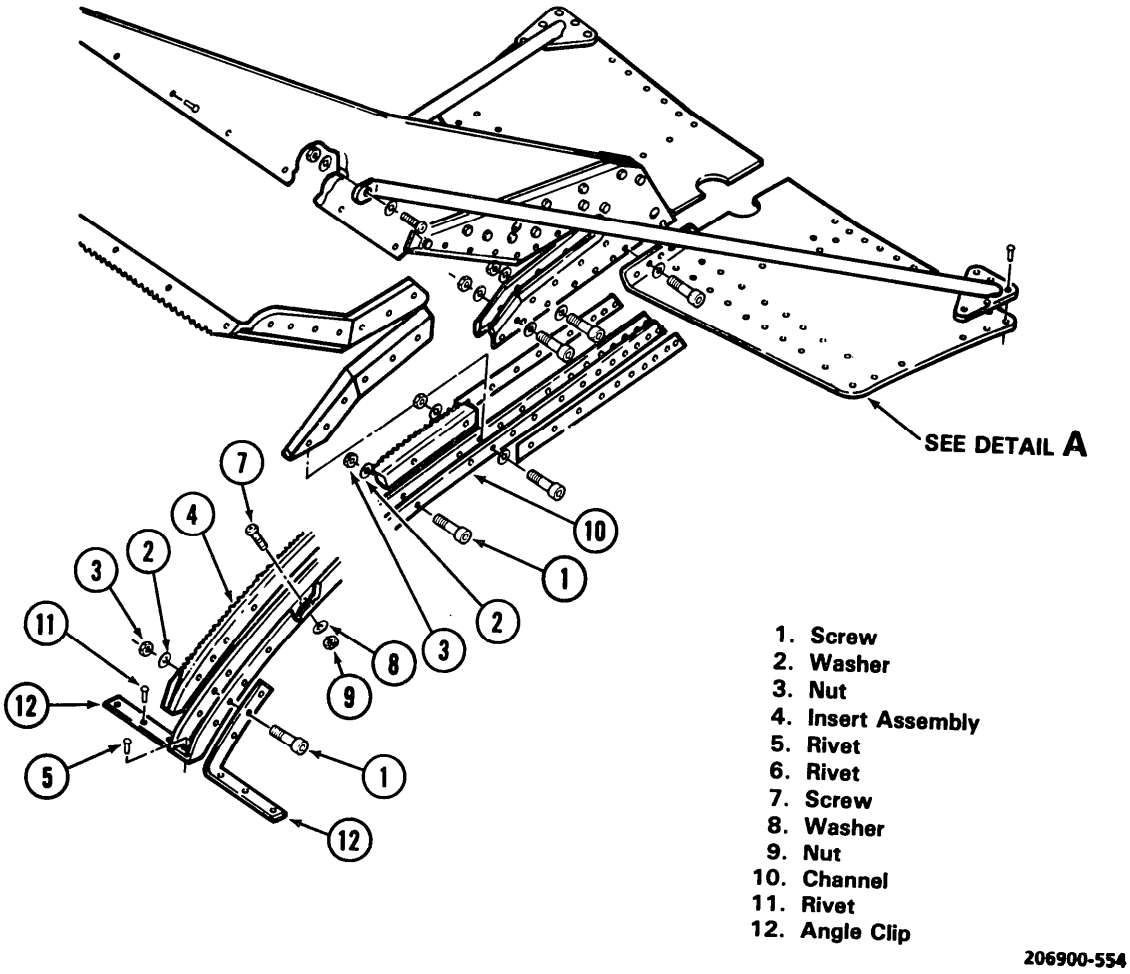

Figure 2-72. Removal — Sawtooth Insert/Channel Assembly Deflector Assembly A

e. Locate existing rivet hole at lower end of channel. Countersink to accommodate NAS rivet.

f. Locate existing holes (2 each) at upper end of channel. Countersink to accommodate NAS rivet.

g. Remove the channel (10), deburr, and clean out all metal particles. Reposition the channel using screws as temporary dowel pins. Trim lower end of channel to clear ram air inlet grill as required. Trim upper end of channel to match cutter assembly/doubler as required.

h. Apply a bead of sealing compound (C131) to channel (10) along its entire mounting surface to prevent entry of water between the channel and the retainer.

NOTE

Examine windshield retainer for signs of separation from the windshields. If separation exists remove the retainer and reseal using sealing compound (C130). Allow sealant to cure until tack free.

i. Install the channel (10) using screws (7), washers (8), and nuts (9). Start at the lower end of the channel and work up.

j. Install rivet (5) at lower end of channel applying sealing compound (C131) under the head.

k. Install rivets (6) at the upper end of the channel using extension piece shown in figure 2-76. Apply sealing compound (C131) under the heads.

l. Position lower angles (12) firmly against the channel (10) and using a hole finder locate the six lower windshield retaining strip rivet positions and drill through. Remove, clean, and cleco one angle into position and locate the three holes in channel (10). Remove and drill through. Repeat for other angle. Apply sealing compound (C131) to the angle mounting surfaces and install the angles.

m. Clean excess sealant from channel (10) and angle clips (12). Refer to TM 43-0105.

n. Install upper cutter assembly as per paragraph 2-352, steps 2-352f. through 2-352j.

o. Install insert assembly. Refer to paragraph 2-366.

p. Prime/paint as required. Refer to TM 55-1500-345-23.

q. Install wire/cable clamps using existing hardware and reposition the wire bundle. Remove the circuit breaker panel and glareshield covering and thoroughly clean up the cockpit interior to remove all metal particles.

r. Remove the windshield and overhead window covering and close the circuit breaker panel.

2-368.1. REWORK — CHANNEL. If the channel (Figure 2-72, item 10) is found to extend beyond angles (Figure 2-72, item 12) rework the parts as described below:

a. Remove screws (items 1, 2, 3) retaining the insert in the channel (item 10). Remove insert from channel.

b. Scribe a line at the end of the channel flush with the end of the tie down angles.

c. File channel until it is flush with the end of the angles.

d. Prime and paint the rework area to match existing finish.

e. Reinstall insert and visually inspect to ensure that it does not protrude above channel as outlined in paragraph 2-366.1. If condition exists, rework in accordance with instructions in paragraph 2-366.1.

f. Refer to Figure 2-72.1, Detail B, for an example of an incorrectly installed channel.

2-369. INSTALLATION — CHANNEL C .

a. Position channel (11, figure 2-79) on windshield centerpost. File lower end of channel (11) as required to ensure that end is flush on helicopter. Trim the upper end of channel (11) to maintain **0.100** inches from antenna base. If channel step lower end does not butt against lower edge of centerpost retaining strip, mark, and record distance of step from retaining strip.

b. Using template and a hole finder, locate and drill the center row of holes running between the windshields and the five holes aft of the centerpost on the cabin roof. If required, lower end of template must extend beyond centerpost retaining strip the distance recorded in step d.

c. Position the template on channel (11) and transfer the holes from the template to the channel section.

d. Position the channel (11) using cleco fasteners. Ensure channel is centrally located and check hole alignment.

e. Remove channel (11) and countersink holes to accommodate rivets. Deburr and clean out all metal particles.

f. Apply a bead of sealing compound (C130) along entire channel mounting surface to prevent entry of water between the channel and the retainer.

g. Install the channel using rivets (16 and 17) using extension piece shown in figure 2-76. Start at the lower end of the channel and work up.

h. Position lower clips (19, figure 2-79) firmly against the channel (11) and using a hole finder locate the four lower windshield retaining strip rivet positions and drill through. Remove, clean, and cleco

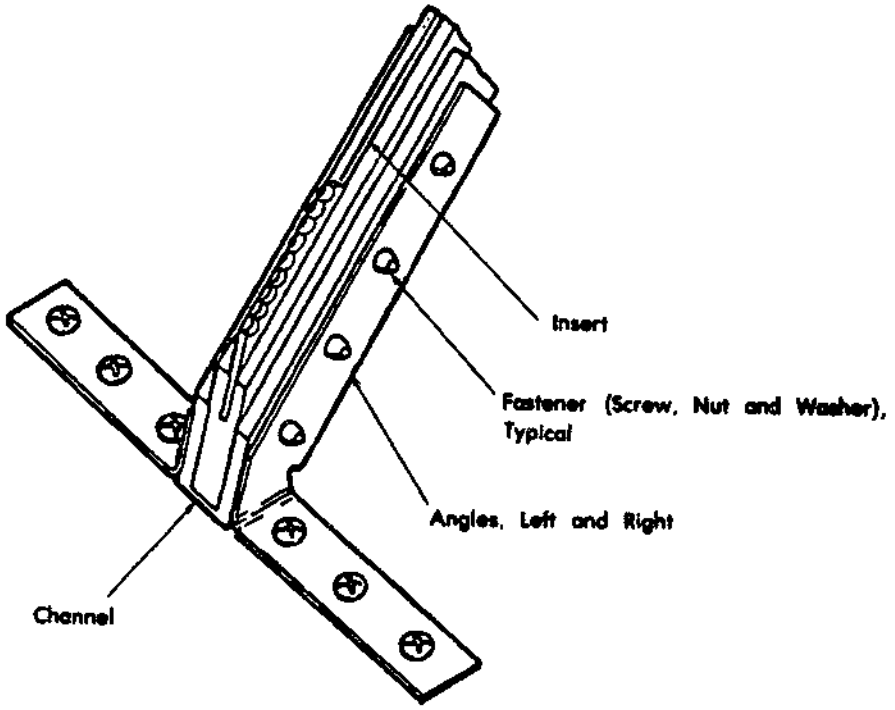

Correctly Installed Insert, Channel and Angles, for Windshield Deflector.

DETAIL A

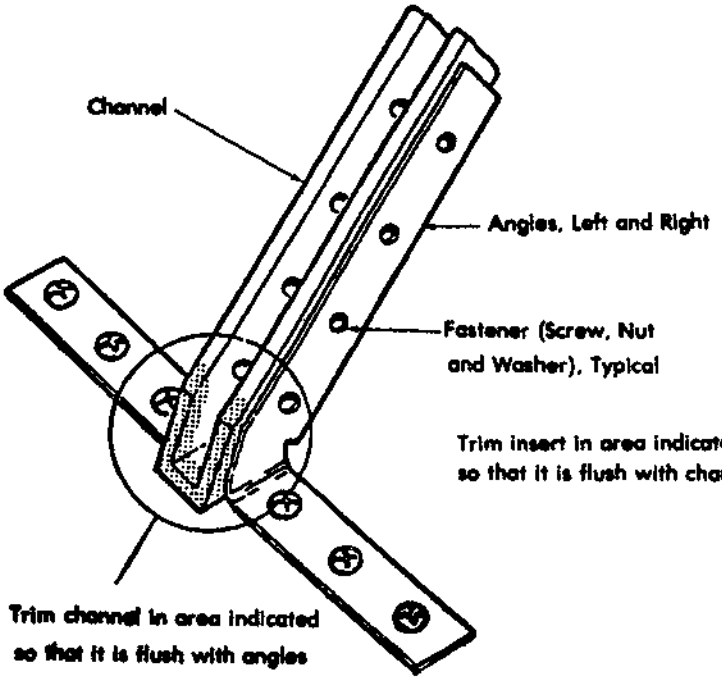

Incorrectly Installed Channel Requiring Trimming, for Windshield Deflector.

DETAIL B

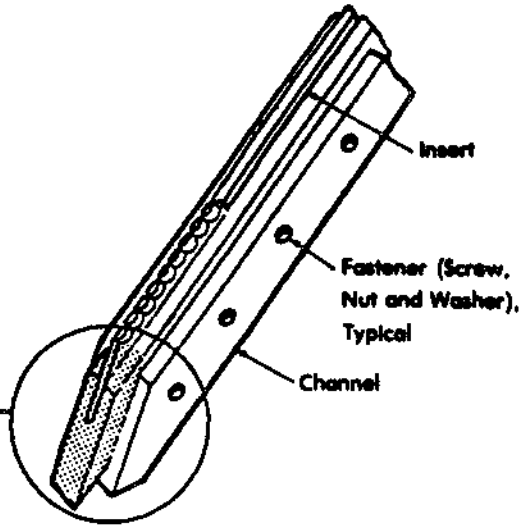

Incorrectly Installed Insert Requiring Trimming, for Windshield Deflector.

DETAIL C

Figure 2-72.1. Rework-Channel and Insert

one clip into position and locate the four holes in channel. Remove and drill through. Repeat for other clip. Apply sealing compound (C131) to the clip mounting surfaces and install the clips.

i. Clean excess sealant from channel (11) and clips (19). Refer to TM 43-0105.

j. Install upper cutter assembly as per paragraph 2-352, steps 2-352f. through 2-352j.

k. Install insert assembly as per paragraph 2-366.

l. Prime/paint as required. Refer to TM 55-1500-345-23.

m. Install cable clamps using existing hardware and reposition the wire bundle. Remove the circuit breaker panel and glareshield covering and thoroughly clean up the cockpit interior to remove all metal particles.

n. Remove the windshield and overhead window covering and close the circuit breaker panel.

2-370. LOWER CUTTER ASSEMBLY.

2-371. DESCRIPTION — LOWER CUTTER ASSEMBLY. The mechanical cutter/deflector (lower) consists of a sawtooth equipped deflector section; providing deflection/abrading feature, leading into the primary cable cutting mechanism wedge type cutting blades positioned to provide the necessary mechanical advantage to cut the objective wires/cables while minimizing load input into the airframe.

2-372. INSPECTION — LOWER CUTTER ASSEMBLY.

a. Inspect the cutter assembly for paint deterioration, superficial paint scratches, and light corrosion. No moderate or heavy corrosion allowed. Scratches, nicks, or gouges to a depth of **0.010** inch must be repaired.

b. Inspect the sawblade. Refer to paragraph 2-325.

c. Inspect the cutter blades. Refer to paragraph 2-333.

d. Inspect the deflector assembly for cracks and permanent deformation. Deflector assemblies showing evidence of any cracks and/or permanent deformation must be replaced.

e. Inspect the security of the lower cutter assembly. Loose rivets must be replaced.

f. Inspect the surrounding support structure for evidence of permanent deformation. If permanent structural deformation exists replace the entire cutter assembly.

2-373. REMOVAL — LOWER CUTTER ASSEMBLY.

CAUTION

Support cutter when removing the last few screws to prevent damage to the support structure and to prevent the cutter dropping from the aircraft.

a. Remove screws (1, figure 2-73) installing cutter assembly.

b. Remove screws (3) and antenna (4).

c. Remove panel assembly (5).

2-374. REPAIR — LOWER CUTTER ASSEMBLY.

a. Paint deterioration or superficial paint scratches as per TM 55-1500-345-23.

b. Light corrosion — clean and repair area as per TM 43-0105.

c. Sawblade — refer to paragraph 2-242.

d. Cutter blade — refer to paragraph 2-336.

e. Using sandpaper (C124) remove scratches to a maximum depth of **0.010** inch. Prime/paint as required in accordance with TM 55-1500-345-23.

2-375. INSTALLATION — LOWER CUTTER ASSEMBLY.

a. Remove stiffener (6, figure 2-73) from existing panel and utilize panel as template.

b. Position the template on top of panel (5), and cleco together through the cutter and antenna mounting holes. Ensure the forward center hole is perfectly aligned. Drill the panel outer holes. Transfer the two drain holes from template to the panel only if required. Trim the fore and aft edges of the panel to match the template if necessary. Remove the panel, deburr and prime in accordance with TM 55-1500-345-23.

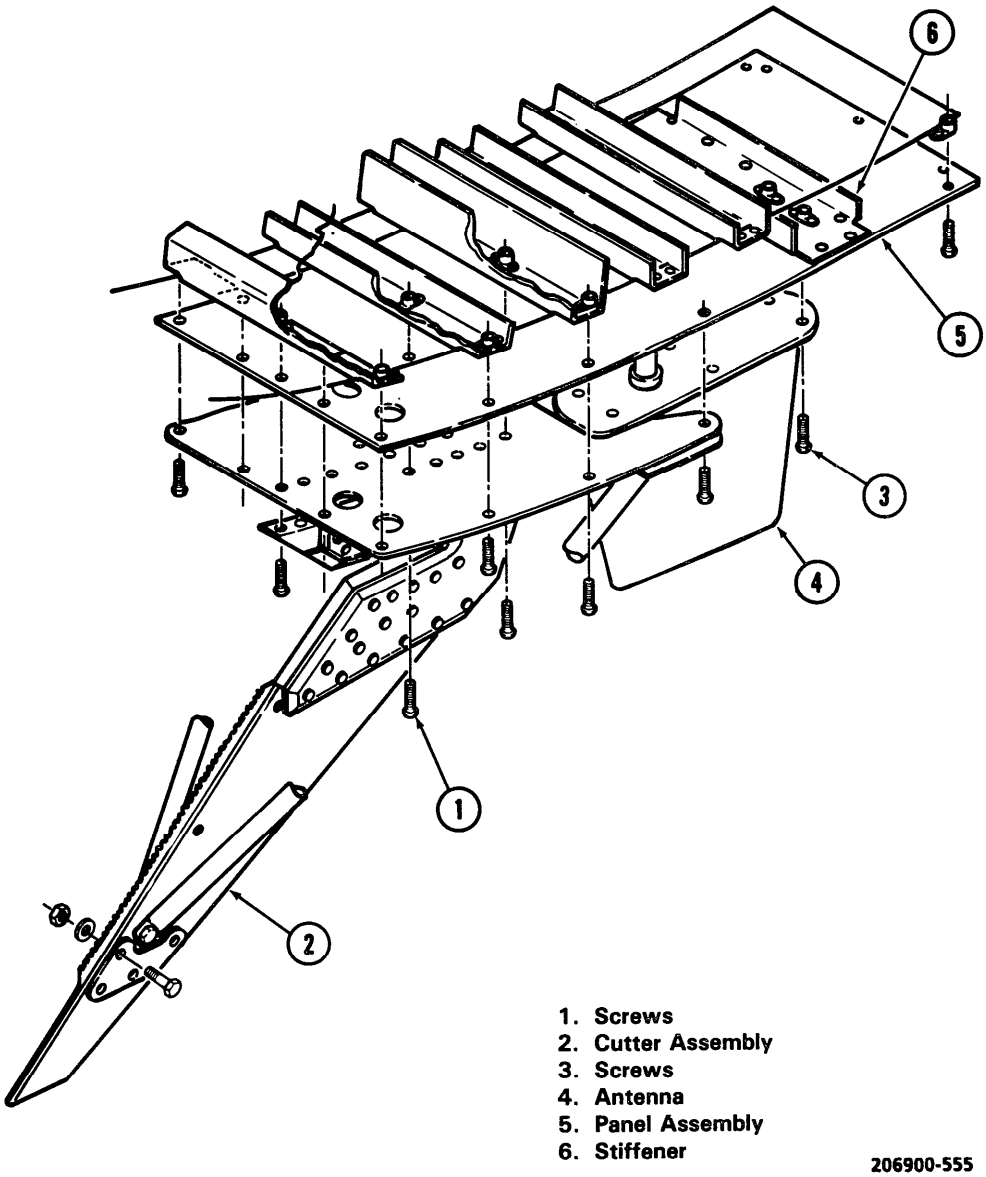

Figure 2-73. Removal — Lower Cutter Assembly

c. Position the cutter assembly (2) on the panel (5) and cleco through the four cutter mounting holes. Check fore and aft alignment and clamp. Locate the panel outer holes and match by back drilling through the panel into the cutter assembly doubler and strut feet. Remove and deburr.

d. Using existing screws loosely attach the antenna (4) to panel (5) by the two rear mounting screws (3). Position the panel and connect the antenna cable. Loosely install the remaining four antenna mounting screws (3) and the aft seven panel mounting screws (1).

e. Position cutter assembly (2) and loosely install the two forward mounting screws (1), and the two aft mounting screws (1). Check the cutter alignment, install and tighten the panel forward center screw first to ensure the cutter alignment is maintained. Install and tighten the remaining panel, cutter and antenna mounting screws (1).

f. Prime/paint as required. Refer to TM 55-1500-345-23.

2-376. BREAKAWAY TIP — LOWER CUTTER ASSEMBLY.

2-377. DESCRIPTION — BREAKAWAY TIP. The lower cutter assembly features a breakaway tip (10, figure 2-65) designed to shear when relatively large ground contact forces are experienced and before helicopter structural damage is incurred. However, the tip shear rivets are chosen to withstand the smaller forces experienced during wire strikes, and the tip will still effectively deflect wires/cables into the cutter blades.

2-378. INSPECTION — BREAKAWAY TIP.

a. Inspect the tip assembly for paint deterioration, superficial paint scratches, and light corrosion. No moderate or heavy corrosion allowed. Scratches, nicks, gouges to a depth of **0.006** may be repaired.

b. Inspect the security of the breakaway tip, paying particular attention to the rivets. If there is evidence of loose or deformed rivets, replace rivets.

2-379. REMOVAL — BREAKAWAY TIP. Remove bolts (1, figure 2-74), washers (2), and nuts (3) and remove tip assembly (4).

2-380. REPAIR — BREAKAWAY TIP.

a. Paint deterioration or superficial paint scratches in accordance with TM 55-1500-345-23.

b. Using sandpaper (C124) remove scratches to a maximum depth of **0.006** inch. Prime/paint as required in accordance with TM 55-1500-345-23.

2-381. INSTALLATION — BREAKAWAY TIP.

a. Position tip assembly (4, figure 2-74) and install nuts (3), washers (2), and bolts (1).

b. Prime/paint as required. Refer to TM 55-1500-345-23.

2-382. STIFFENERS, LOWER CUTTER.

2-383. DESCRIPTION — STIFFENERS. The stiffeners (6, figure 2-65) provide additional structural support, distributing wire cutting loads to the surrounding airframe.

2-384. INSPECTION — STIFFENERS.

a. Inspect stiffeners for cracks and permanent deformation. Stiffeners showing evidence of cracks and/or permanent deformation must be replaced.

b. Inspect the security of the stiffeners. Loose rivets must be replaced.

c. Inspect the surrounding support structure for cracks and permanent deformation.

2-385. REMOVAL — STIFFENERS.

a. Remove lower cutter assembly as per paragraph 2-327.

b. Remove rivets (1, figure 2-75) and stiffener (2).

2-386. REPAIR — STIFFENERS. No repair authorized.

2-387. INSTALLATION — STIFFENER.

a. Forward bearing plate stiffener (4, figure 2-75). Locate stiffener assembly and attach loosely to the helicopter through the forward center hole position using a screw and proceed as follows.

(1) Transfer two additional nut plate holes to helicopter structure.

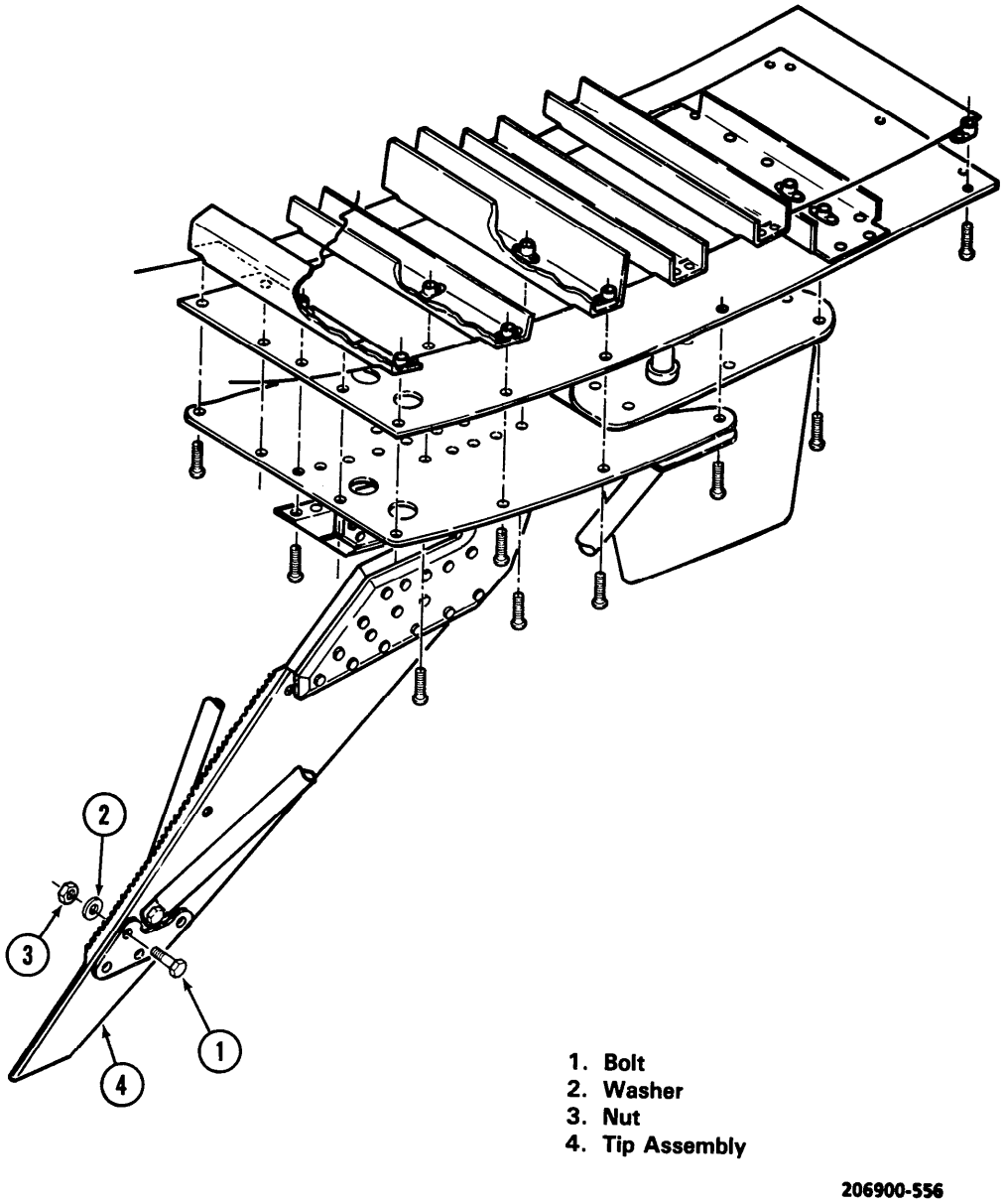

Figure 2-74. Removal — Breakaway Tip

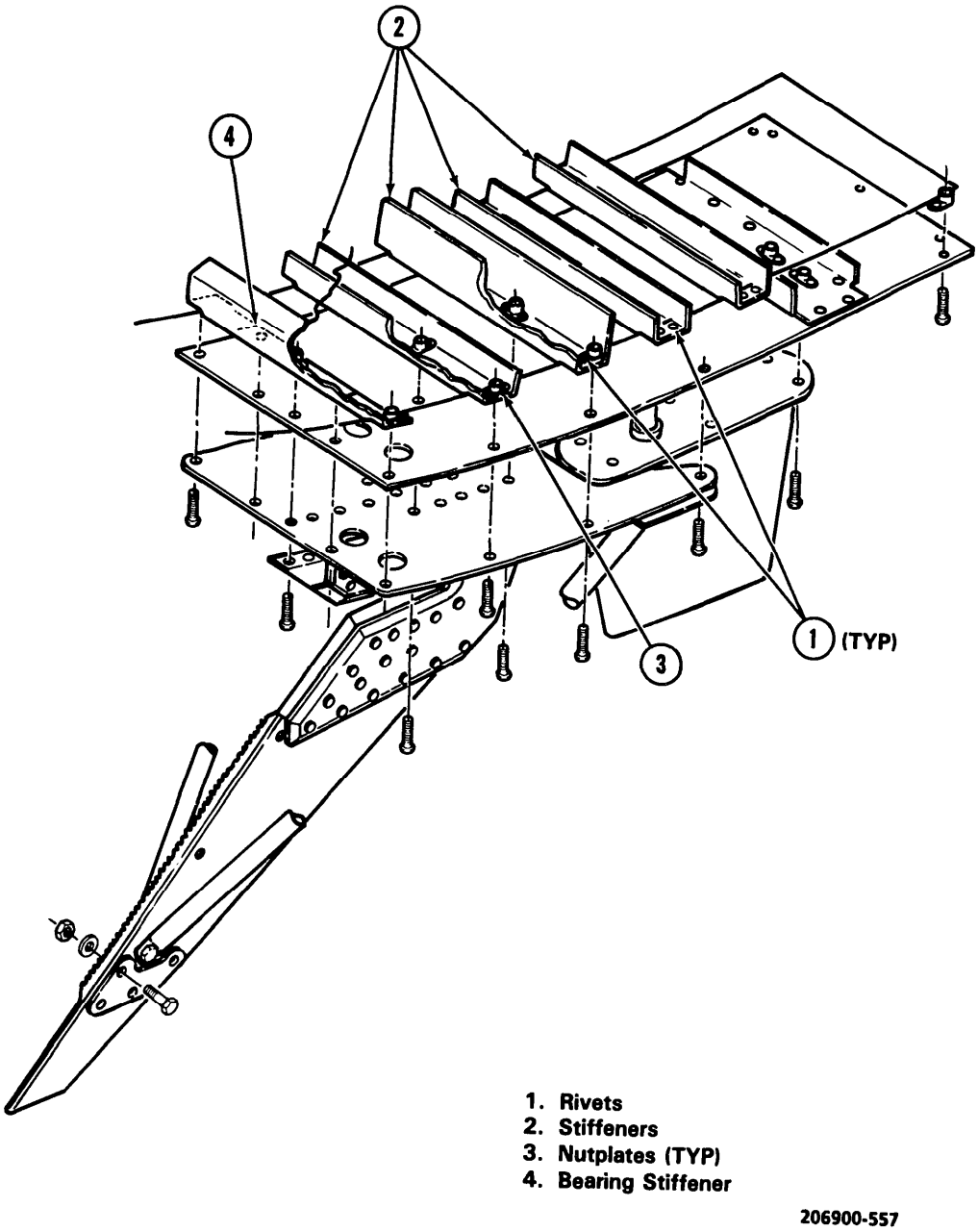

Figure 2-75. Removal — Stiffeners

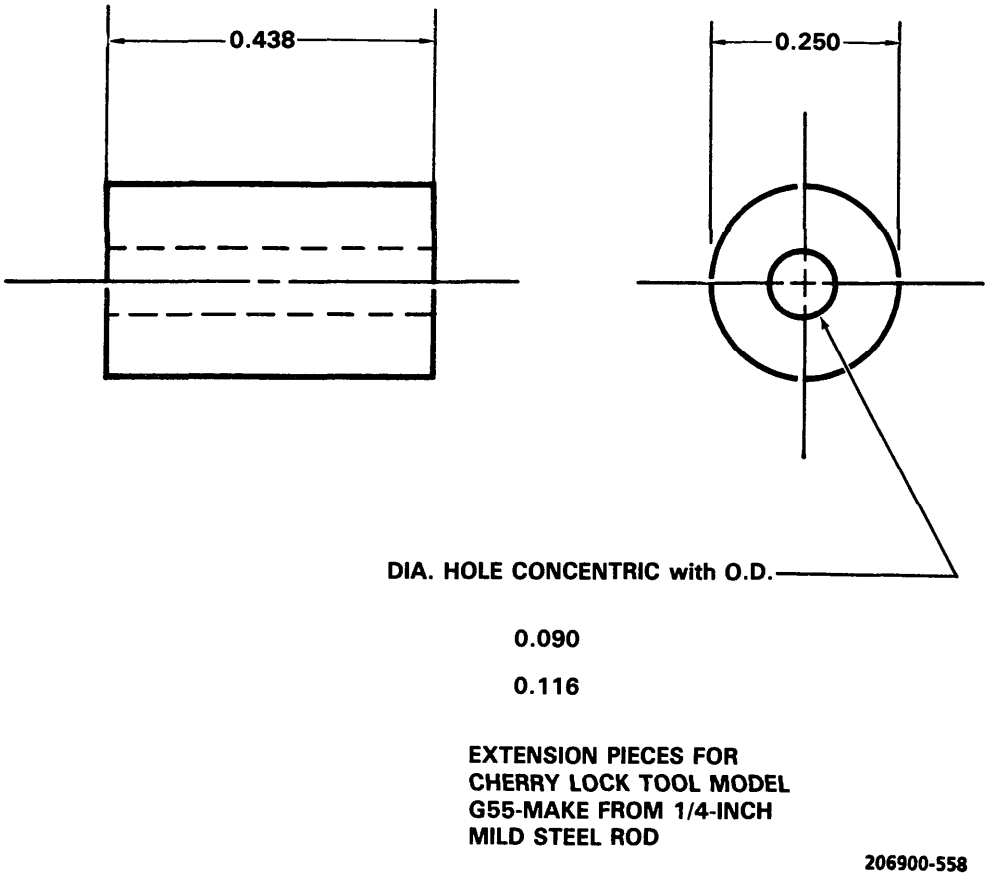

Figure 2-76. Work-Aids — WSPS — Channel Installation

(2) Transfer stiffener assembly mounting holes.

(3) Remove stiffener assembly and countersink two mounting holes.

(4) Install stiffener assembly using rivets (1).

b. Cutter support stiffeners (2).

(1) Locate stiffeners to be replaced in their respective positions on the existing panel assembly. Attach to the panel using screws through the antenna and/or cutter predrilled position holes. Due to the floating anchor nuts, the stiffeners can move slightly on the template; therefore, use a square to ensure correct 90 degree alignment between the stiffeners and the template, then tighten locating screws. Back-drill the stiffener mounting holes, the nut plate mounting holes, and the nut plate screw holes. Remove the stiffeners and trim both ends sufficiently to allow proper fit to the aircraft ensuring correct hole edge distance is maintained. Countersink or dimple holes as required to match existing dimpled holes on aircraft.

(2) Place cutter support stiffeners into their respective positions and install.

c. Install panel assembly and cutter assembly. Refer to paragraph 2-375, step 2-375d.

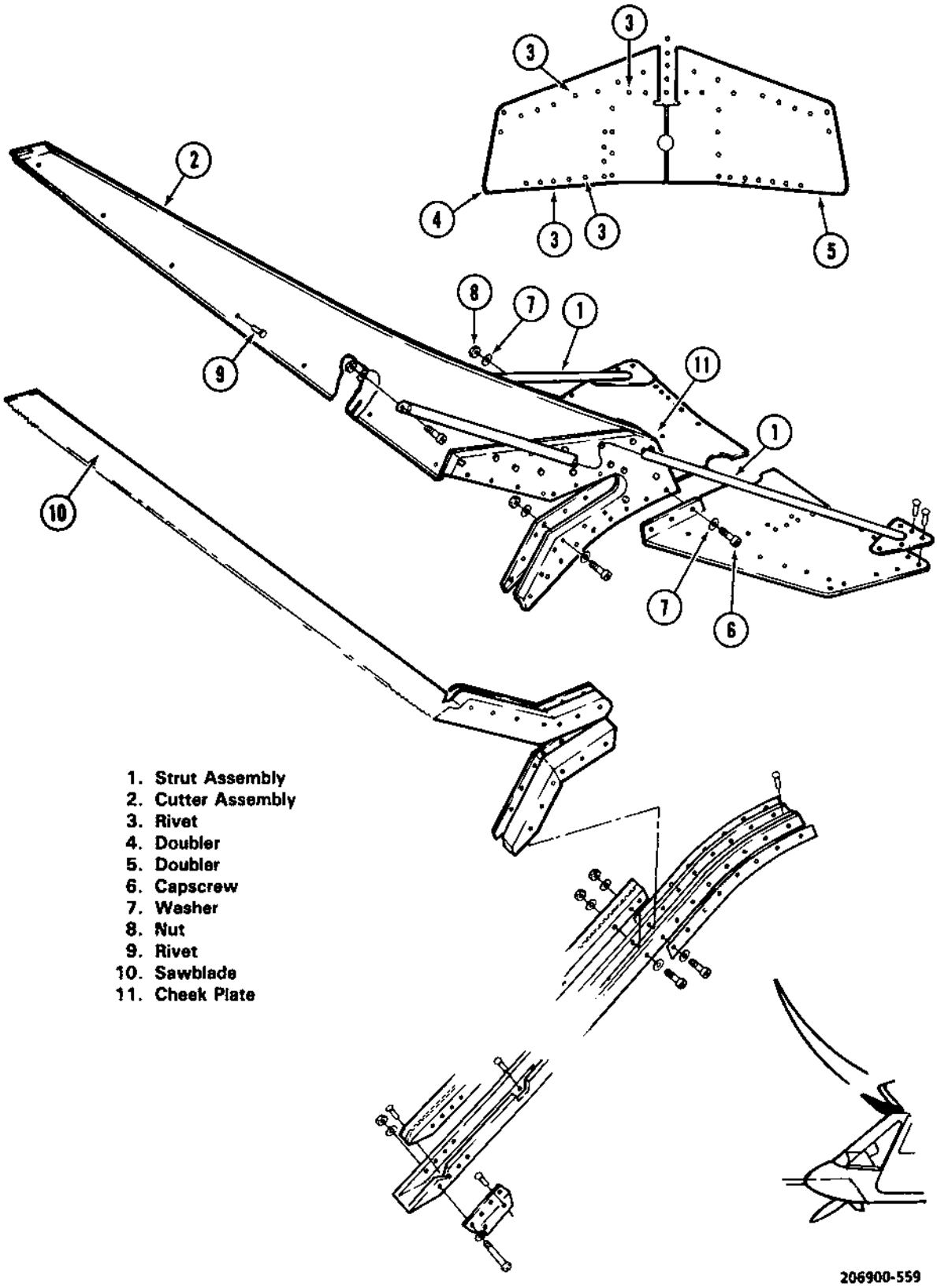

Figure 2-77. Removal — Doublers and Saw Blade C

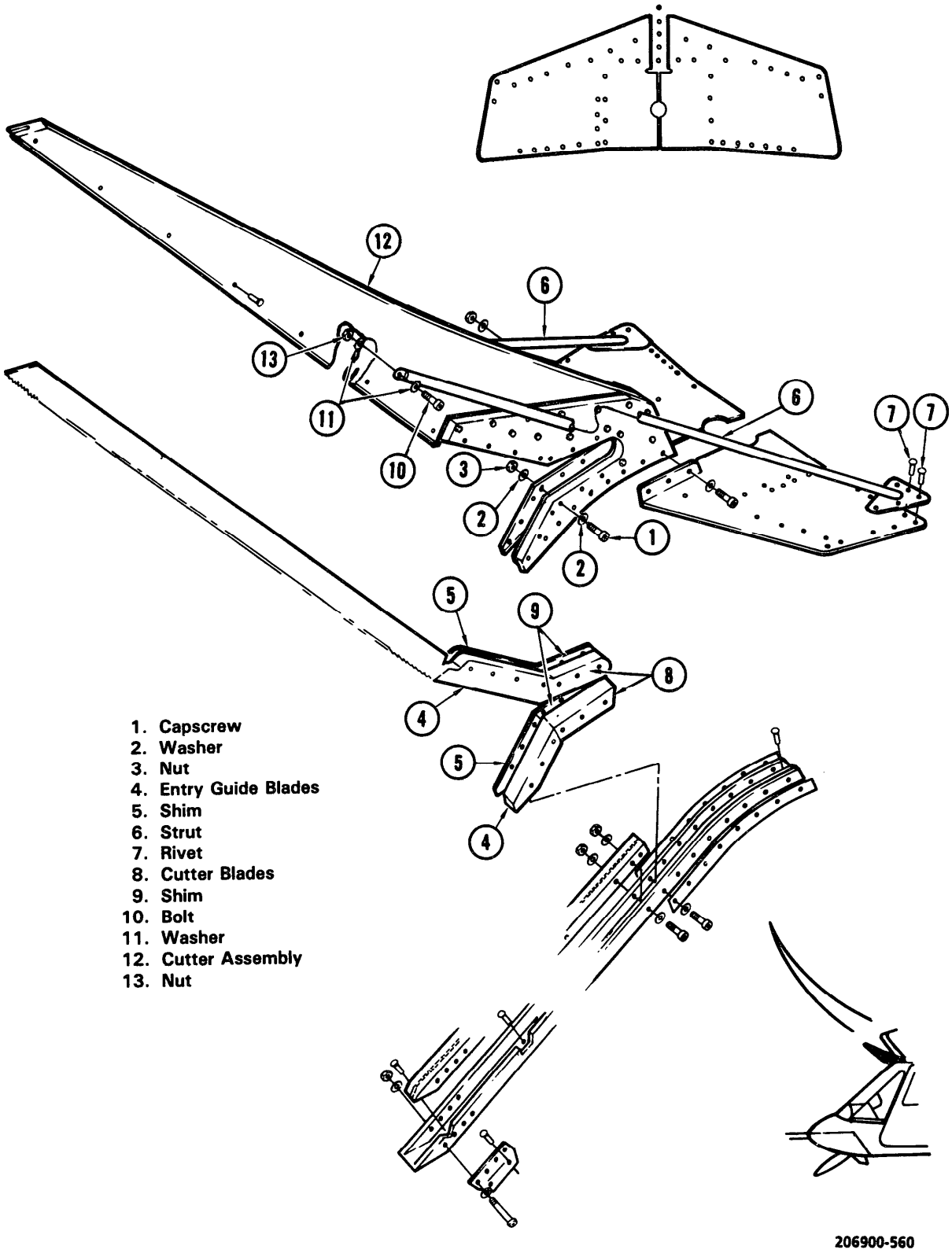

Figure 2-78. Removal — Strut Assembly, Cutter Blades C

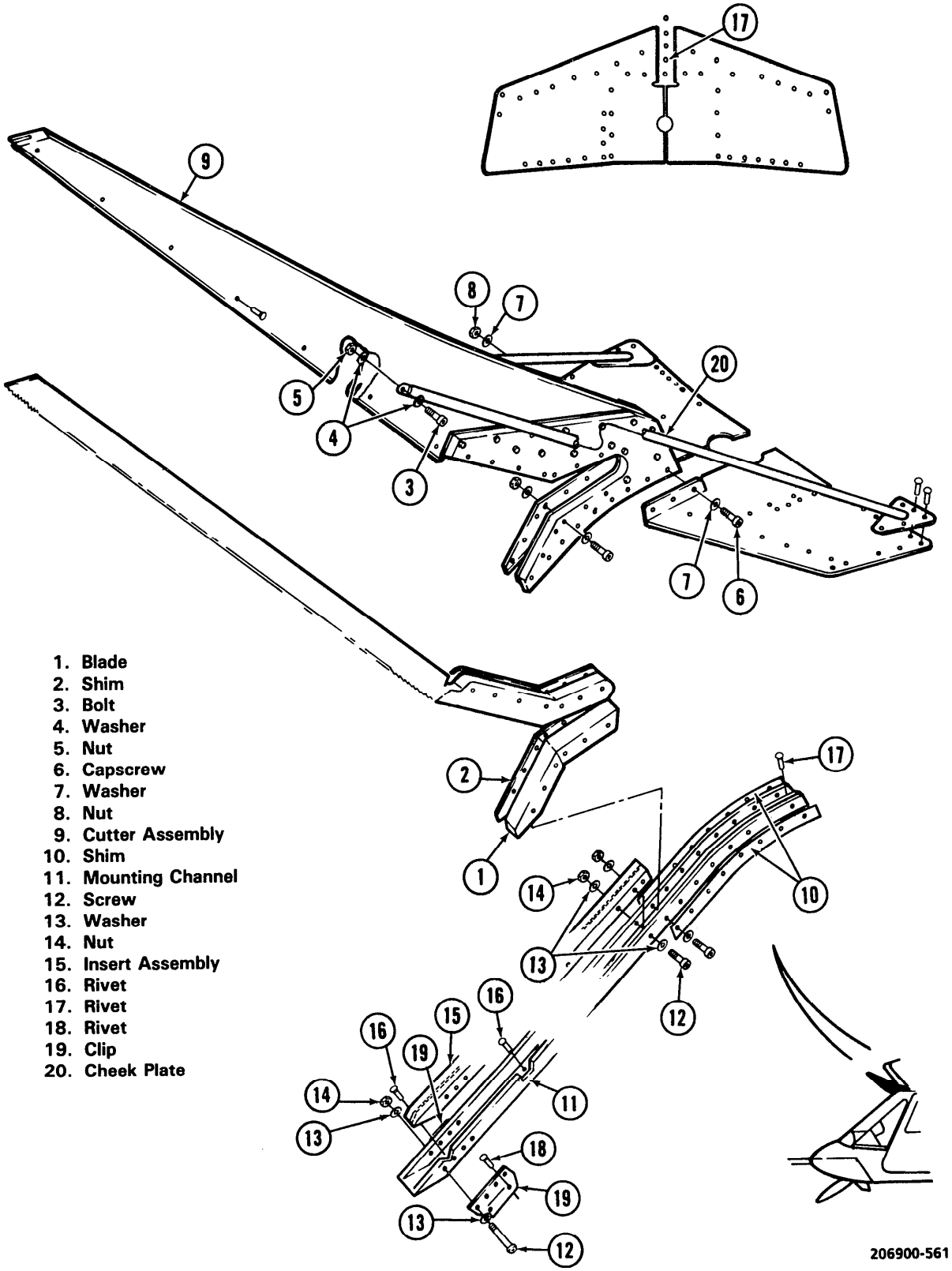

Figure 2-79. Removal — Channel, Sawtooth Insert and Upper Cutter Assembly C

CHAPTER 3
ALIGHTING GEAR

3-1. GENERAL.

This chapter provides all the essential information for personnel to accomplish maintenance on the standard, high, and floating alighting gears.

Premaintenance Requirements for Alighting Gear

Condition	Requirements
Model	OH-58A/C
Part No. or Serial No.	All
Special Tools	None
Test Equipment	None
Support Equipment	(S14) (S4) (S16)
Minimum Personnel Required	Three
Consumable Materials	(C18) (C19) (C20) (C21) (C22) (C38) (C41) (C45) (C88) (C116) (C117) (C129) (C131) (C143) (C144)
Special Environmental Conditions	None

SECTION I LANDING GEAR

3-2. STANDARD LANDING GEAR.

3-3. DESCRIPTION — STANDARD LANDING GEAR. The standard landing gear assembly consists of two tubular aluminum alloy main skid tube assemblies and two curved aluminum alloy crosstube assemblies. The landing gear is attached to the fuselage structure with four strap assemblies. Provisions are made on the skid tubes for installing ground handling trucks and two rings are provided for towing. Each skid tube is provided with replaceable skid shoes which absorb the wear caused by normal ground contact of the helicopter.

CAUTION

Landing gear crosstubes will be inspected after a hard landing or overloading to determine if excessive crosstube spread has occurred.

CAUTION

The maximum weight which can be added to each standard gear skid tube is seven (7) pounds. No weight can be mounted on cross tubes. Exceeding this weight will result in failure of the aircraft cross tube at the fuselage attach location.

NOTE

Skid tube assemblies and crosstube assemblies are fully interchangeable with components having identical part numbers except as stated below.

Skid tube assemblies P/N 206-052-118-31 and -32 may replace lower dash numbered skid tube assemblies when changed as a set and used with double wheel truck assemblies.

Skid tube assemblies P/N 206-052-118-9 and -10 and crosstube assemblies P/N 206-052-103-1 and -3 can be matched with components having identical part numbers or skid tube assemblies P/N 206-052-118-13, -14, -31, and 32 and crosstube assemblies P/N 206-052-103-5 and -7.

3-4. CLEANING — STANDARD LANDING GEAR. Refer to paragraph 1-18 and TM 55-1500-344-23 for cleaning procedures.

3-5. INSPECTION — STANDARD LANDING GEAR.

a. Inspect crosstubes for excessive spread as follows:

(1) Raise and level helicopter on jacks (S14) so that landing gear is relieved of weight. Refer to paragraph 1-38.

(2) Determine center of either crosstube by measurement between bearing straps. Drop a plumb line from center of crosstube to ground. Refer to figure 3-1.

(3) Measure from plumb line to center of each skid at crosstube attachment point. Normal dimension is **37.250** inches. If any measurement exceeds **38.250** inches between skid center lines, replace defective crosstube.

b. Inspect crosstubes for scratches, nicks, and dents.

NOTE

Scratches, nicks, and dents of less than 0.005 inch depth are considered negligible.

(1) Circumferential scratches that exceed **0.005** inch depth and not exceeding a 45 degree arc many be polished out to the limits shown in figure 3-2.

(2) Longitudinal scratches and nicks of any length that exceed **0.005** inch depth may be polished out to the limits shown in figure 3-2.

(3) Dents limits are the same as those specified for nicks. No sharp dents are permitted.

c. Inspect skid tube and saddle for scratches, nicks, and dents. Inspect skid saddles for cracks.

(1) Circumferential scratches and nicks are not to exceed **0.025** inch depth and arc of 90 degree.

(2) Scratches, scuffs, and nicks running longitudinally may be of any length but are not the exceed **0.025** inches depth.

(3) Smooth dents are not to exceed **0.250** inch depth and **1.000** inch diameter.

(4) Corrosion damage is not to exceed **0.250** inch depth over an area greater than 1/4 the tube circumference by **3.000** inches in length.

(5) Bond failure between midpoint doubler and the tube shall not exceed 20% of doubler area.

(6) Inspect fitting's part number 206-052-106-1 for bent or cracked lugs, replace as needed. Inspect skid saddles for cracks.

d. Inspect skid shoes for wear, damage, end security.

e. Inspect tow rings for security and damage.

f. Inspect crosstube strap rubber cushions for cracks, deterioration, and embrittlement. This type of deficiency is cause for cushion replacement. To bend replacement cushions, use adhesive (C9). Inspect for fuselage shift on skid crosstubes. Some shift is acceptable, except when clearance between crosstube upper saddle and spacer pins is **0.010** inch or less.

g. Inspect fitting assemblies (figure 3-3) for corrosion and damage:

(1) Corrosion cannot effect move than 20% of a surface area.

(a) Corrosion pits cannot be wider than **0.060** inch, and should not be more than 15% of local depth or thickness.

(b) Each pit must be separated by at least **0.200** inch.

(c) No more than 14 pits are permissible in a **1.000** inch area.

(d) A corroded area may only be repaired once.

(2) Wear on the fitting assemblies caused by hard contact and chafing from rivet collars may be up to a maximum of **0.025** inch.

h. Inspect the four support fittings to ensure that the sealant bead around the mounting edge of the fittings still maintains a water barrier. If the sealant (C129) is missing or needs replacement, remove water inside the fitting and clean, then apply another bead after installation.

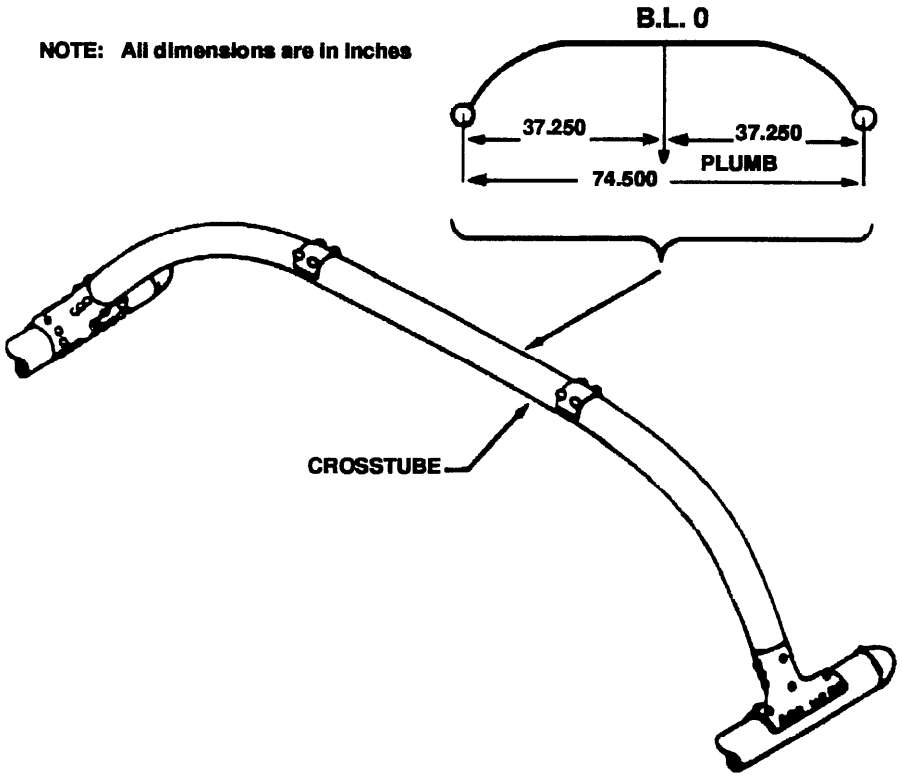

Figure 3-1. Determining Crosstube Center (Typical)

i. Inspect saddle for loose rivets and cracks. Replace cracked saddle; replace loose rivets.

NOTE

Modified crosstubes will have two rivets securing the strap assembly to the crosstube. These two rivets will be located on the transverse centerline (perpendicular to the longitudinal axis of the crosstube) and flush with the surface of the strap assembly, there should not be any rivets present on top of the strap assembly along the longitudinal centerline (parallel to axis of the crosstube). Another method is to check for two holes on top of the strap assembly. These holes are the location of the rivets for the unmodified crosstube. No rivets should be present. Removal of some paint may be necessary to determine if rivets are present.

Unmodified crosstubes will have four rivets securing the strap assembly. These rivets will be flush with the surface of the strap assembly. If crosstube is unmodified, proceed to corrective procedures in paragraph 3-28, step 3-28c.

The four large Pin and Collar rivets prominent on the strap assembly are not affected.

j. If crosstubes are removed from aircraft, inspect strap assembly attached to the crosstube for wear, damage and security. Verify strap assembly has been modified.

3-6. REMOVAL — STANDARD LANDING GEAR.

CAUTION

Do not move helicopter for 25 minutes after power has been removed from the AN/ANS-43 compass to preclude damage to the compass. However, if helicopter must be moved before 25 minutes has elapsed, apply power to the compass and allow a 5 minute warm-up time. The helicopter may then be moved without damage to the gyro with power applied.

a. Raise helicopter using jack (S14) or hoist (S12) and shackle (S16) to allow removal of landing gear from helicopter. Refer to paragraphs 1-36.6, 1-38 and 1-42.

b. Remove bolts and washers at each strap assembly which secure crosstubes to structure.

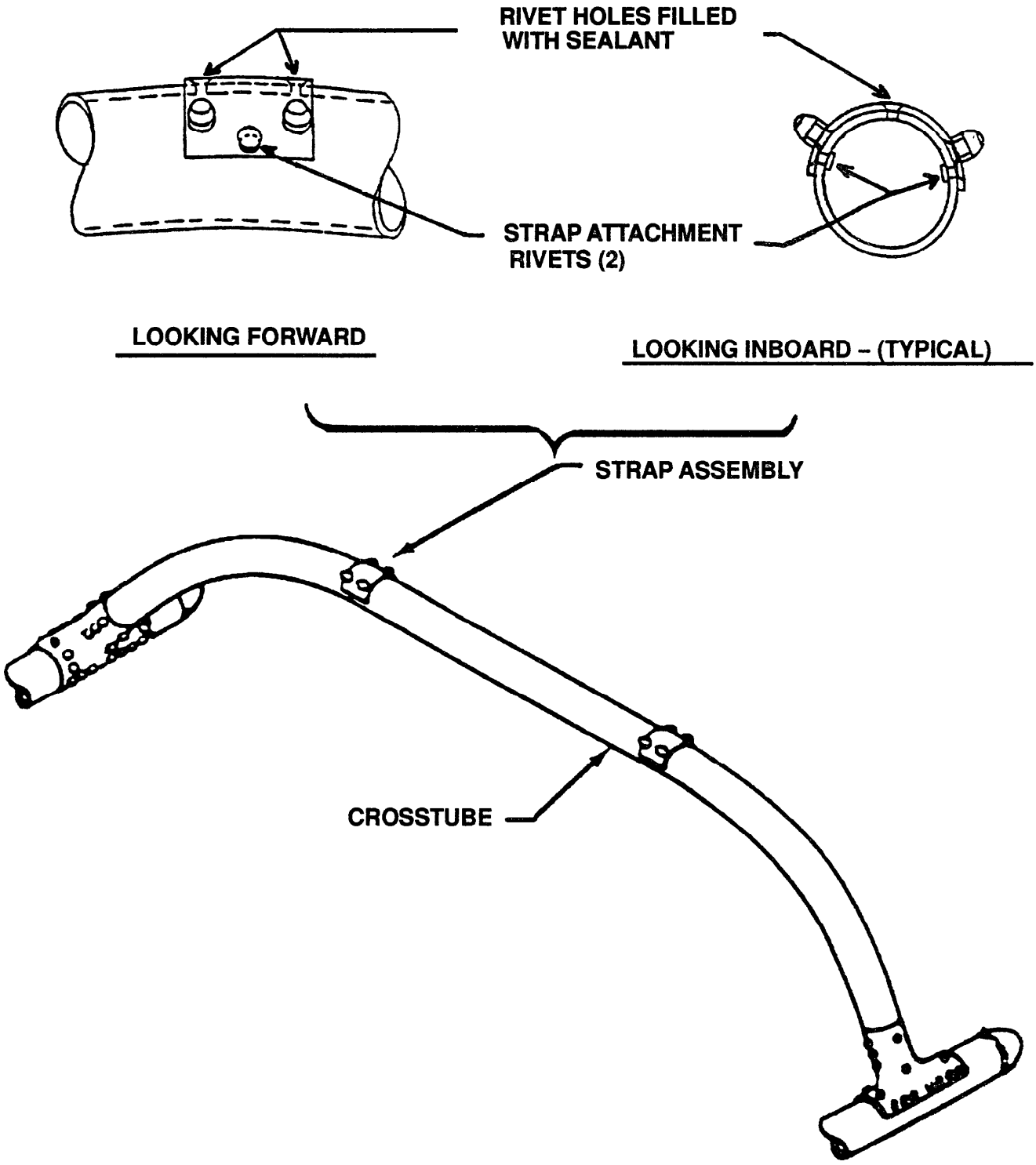

Figure 3-1.1. Modified Crosstube

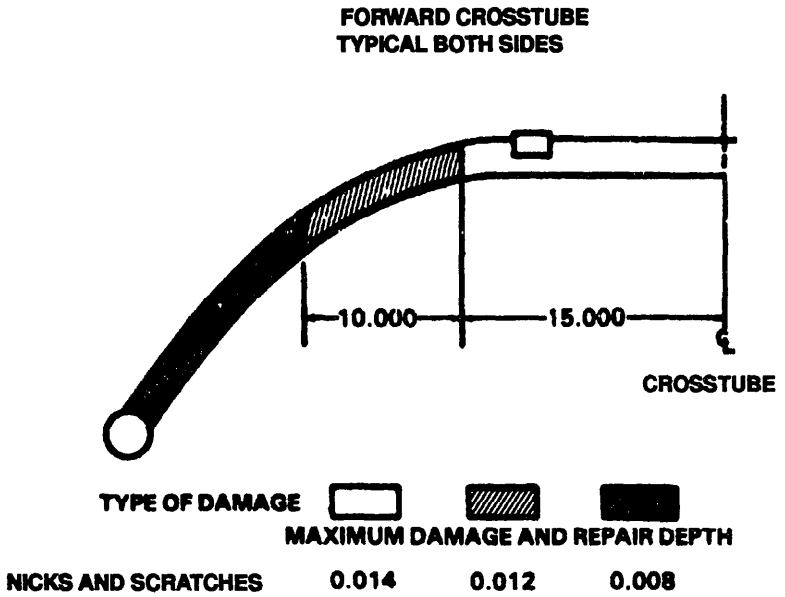

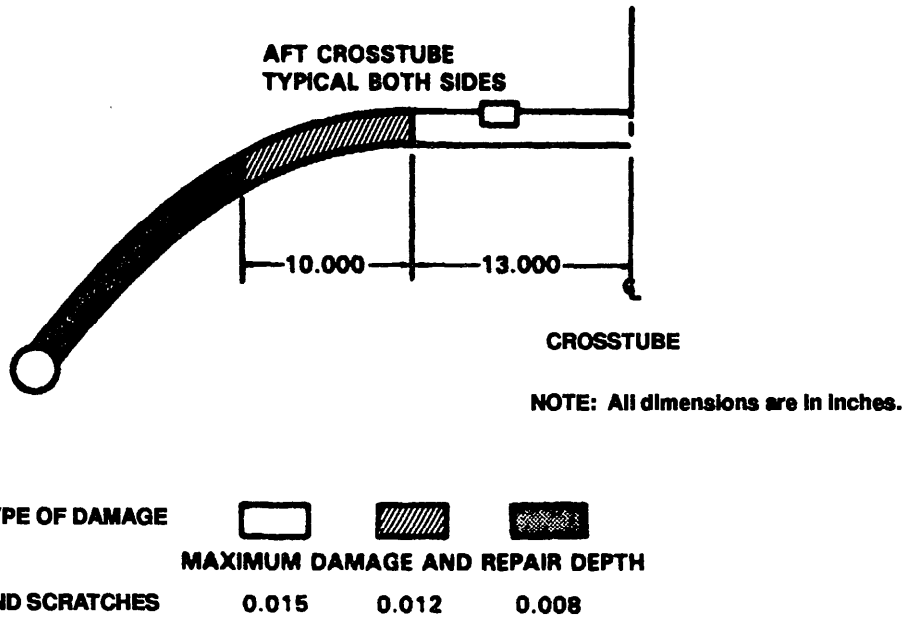

Figure 3-2. Standard Landing Gear Crosstube Inspection Limits

c. Remove four cap assemblies.

NOTE

Identify caps as to location for reassembly of landing gear.

3-7. REPAIR — STANDARD LANDING GEAR SYSTEM (FIGURE 3-4). Refer to paragraphs 3-15, 3-21 and 3-28 for repair procedures.

3-8. INSTALLATION — STANDARD LANDING GEAR.

NOTE

Remove paint at fuselage and crosstube mounting points to ensure good electrical ground. Perform the inspection required in paragraph 3-5, step 3-5h.

Verify strap assembly attached to the crosstubes have been modified. Refer to paragraph 3-5, step 3-5j.

a. Position landing gear and carefully lower helicopter to sear four mounting points of structural beams (fitting assemblies) on bearing straps of crosstubes. Make sure that the fitting assemblies are centered between the rivets on the crosstubes.

NOTE

When replacing fittings, apply adhesive (item 17, table 1-2) prior to installation.

Whenever replacing fitting assembly, apply a bead of sealant (C129) to the mounting edges after installation.

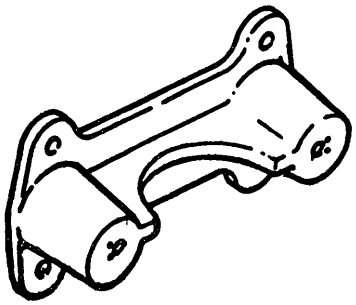

206052-22

Figure 3-3. Standard Landing Gear Fitting Assembly

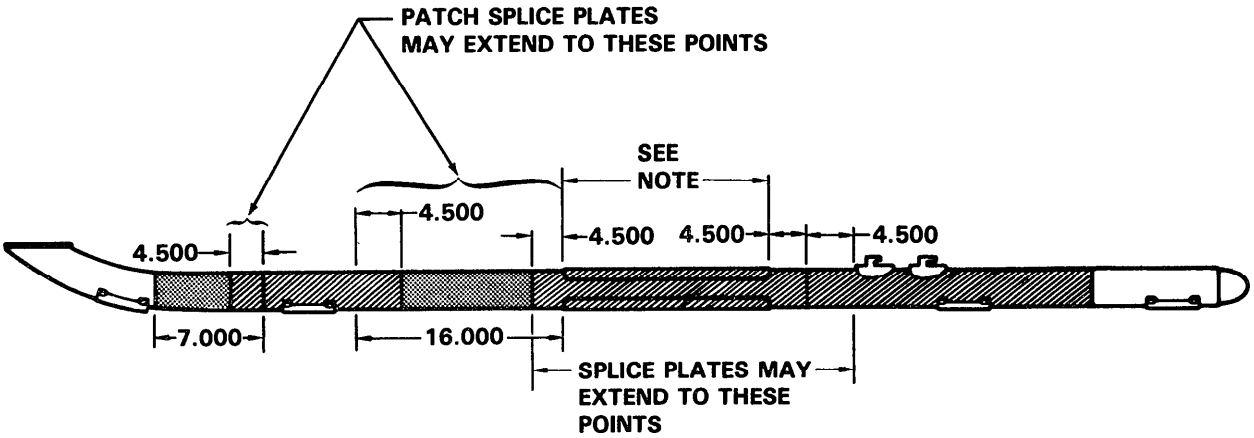

NOTE

No patches allowed on doublers. Damage in this area exceeding negligible limits requires repair by splicing entire doubler length using 0.120 inch 2024T3 or scrap tube with undamaged doublers. All dimensions are in inches.

206052-23

REPAIRS BY PATCHING OR INSERTION NOT PERMITTED

REPAIRS BY PATCHING OR INSERTION PERMITTED

REPAIRS NOT REQUIRED IN THIS AREA - HOLES SHOULD BE PLUGGED TO PREVENT MOISTURE ENTRAPMENT.

SKID TUBE REPAIR LIMITS
STANDARD LANDING GEAR

Figure 3-4. Standard Landing Gear — Skid Tube Repair Limits

b. Install four cap assemblies at correct location, and secure each assembly to plate nuts in fuselage with bolts and washers.

c. Lower helicopter then remove jacks and hoist shackle (if applicable).

3-9. SKID TUBES — STANDARD LANDING GEAR.

CAUTION

The maximum weight which can be added to each standard gear skid tube is seven (7) pounds. No weight can be mounted on cross tubes. Exceeding this weight will result in failure of the aircraft cross tube at the fuselage attach location.

3-10. DESCRIPTION — SKID TUBES — STANDARD LANDING GEAR. The skid tubes consist of two tubular aluminum alloy skid tube assemblies. Each skid tube is provided with replaceable skid shoes.

3-11. CLEANING — SKID TUBES — STANDARD LANDING GEAR. Remove dirt, mud, and/or other foreign material from skid tubes using cleaning compound (C41) and water.

3-12. INSPECTION — SKID TUBES — STANDARD LANDING GEAR. Refer to paragraph 3-5, step 3-5c. for inspection of skid tubes.

3-13. REMOVAL — SKID TUBES — STANDARD LANDING GEAR.

a. Raise helicopter so that the skid tube may be removed. Refer to paragraphs 1-36f, 1-38 and 1-42.

b. Remove screws from saddles of skid tubes.

c. Pull end of crosstubes from sockets of saddles.

3-14. ACCEPTANCE/REJECTION CRITERIA — SKID TUBES — STANDARD LANDING GEAR.

a. Negligible damage.

(1) Circumferential scratches and nicks in the skid tubes not exceeding a depth of **0.025** inch and an arc length of 90 degrees.

(2) Scratches and scuffs and nicks running longitudinally in the skid tube may be of any length but not to exceed a depth of **0.025** inch.

(3) Smooth dents in the skid tubes which do not exceed **0.250** inch in depth and **1.000** in diameter.

(4) Corrosion damage not exceeding **0.025** inch depth over an area not exceeding 1/4 the circumference by **3.000** inches in length.

(5) Scratches, dents, and nicks of any depth and length aft of the aft crosstube saddle.

(6) Scratches, dents, and nicks of any depth and length in the curved portion only of the tube forward of the forward crosstube saddle.

b. Reparable damage.

(1) Scratches, scuffs, and nicks exceeding **0.025** inch deep may be repaired by patching. Refer to paragraph 3-15 and figure 3-5.

(2) Smooth or sharp dents exceeding **1.000** inch diameter and **0.250** inch in depth but not to exceed **2.000** inches in diameter may be repaired by patching. Refer to paragraph 3-15 and figure 3-5.

(3) Holes in skid tubes up to a diameter of **2.000** inches through one surface of the tube only may be repaired by patching.

(4) Scratches, dents, and holes in excess of the **2.000** inch limit may be repaired by splicing in a new section of tube. (Refer to paragraph 3-15, step 3-15b., and figure 3-6.)

(5) Damage resulting in a bond failure between the midpoint doubler and the tube up to 20% of the doubler may be repaired. Refer to paragraph 3-15.

(6) Damage resulting in a bond failure between the midpoint doublers and the tube in excess of 20% of the doubler area necessitates replacement of the doubler. Refer to paragraph 3-15.

c. Damage requiring replacement.

(1) Damage to the skid tube in excess of reparable damage limits necessitates replacement.

(2) Damage to the skid tube within **3.000** inches of the crosstube saddle and in excess of the negligible limits necessitates replacement.

3-15. REPAIR — SKID TUBES — STANDARD LANDING GEAR.

a. To repair by patching proceed as follows:

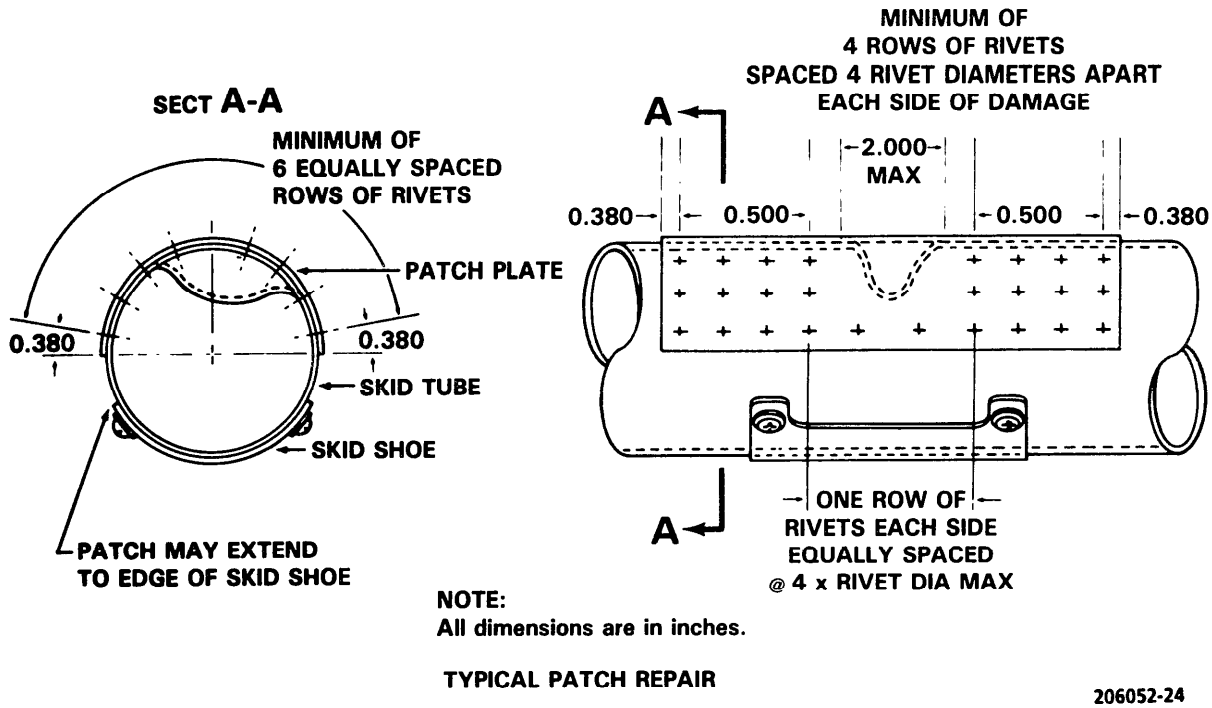

Figure 3-5. Skid Tube Patch Repair (Typical)

(1) Polish out scratches, trim and smooth hole (figure 3-5).

(2) Fabricate a patch from **0.090** inch aluminum alloy sheet or unserviceable tube of required size.

(3) Lay out rivet hole pattern and form patch to fit contour of skid tube (figure 3-5).

(4) Securely clamp patch in place on skid tube and drill rivet holes, using a No. 10 drill.

(5) Secure patch in place using 3/16-inch diameter blind type rivets.

(6) Apply primer (C117) and lacquer (C88) in accordance with TM 55-1500-345-23.

b. To repair by insertion proceed as follows:

NOTE

Dents and holes on either top or bottom side of skid tube, which are greater than two inches across in any direction, shall be repaired by inserting a splice of new tubing. Such repairs are restricted to areas shown in figure 3-4.

(1) Cut out damaged portion of skid tube with metal saw.

(2) Fabricate an insert of required length from tube of 0.083 inch wall thickness or from scrap tube as shown in figure 3-6.

(3) Fabricate splice plate as follows.

(a) Cut four plates to required dimensions as shown in figure 3-6 from sheet stock 0.090 inch thick or use material salvaged from unserviceable tube.

(b) Form two plates to fit the outside diameter of skid tube and two plates to fit inside diameter of tube.

(4) Apply a coat of sealing compound (C131) to plates and tubes.

(5) Layout rivet hole pattern on upper splice and lower side of tube.

(6) Maintaining proper alignment, securely clamp splice plates and tubes together.

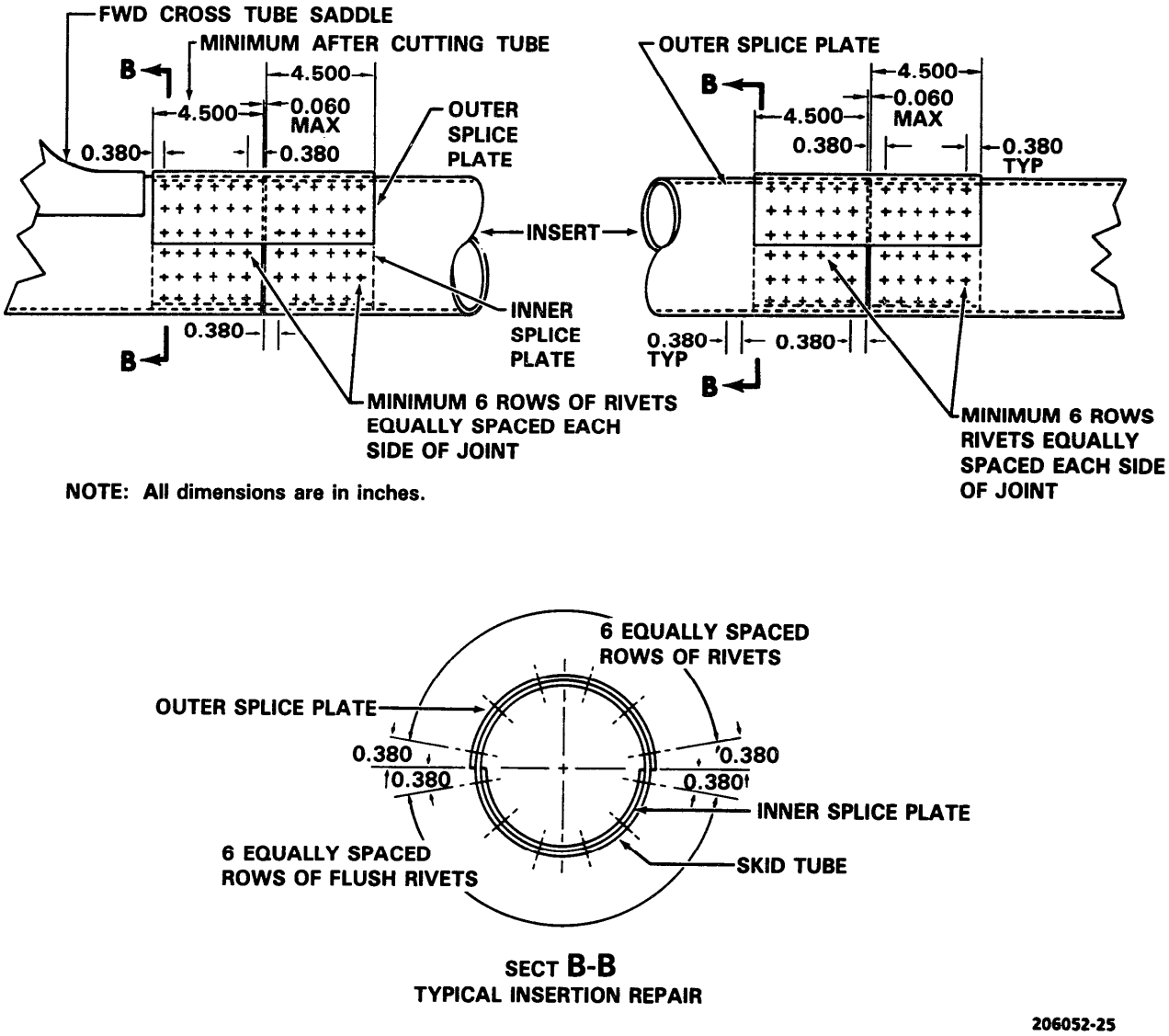

Figure 3-6. Skid Tube Insertion Repair (Typical)

(7) Drill rivet holes in plates and tubes with a No. 13 drill. Countersink lower holes with 100-degree countersink. Install blind rivets in upper half of splice and flush rivets in lower half.

(8) Apply touchup coat of primer (C117) and lacquer (C88) in accordance with TM 55-1500-345-23.

c.

(1) Rebond doubler with adhesive (C19).

(2) Install three additional blind rivets equally spaced on each side of doubler.

d. Doubler repair with bond failure of more than 20%.

(1) Bond new doubler with adhesive (C19).

(2) Install three additional blind rivets equally spaced on each side of doubler.

e. Repair skid tube at tow fitting attachment points as follows:

(1) Fabricate two doubler plates (figure 3-7 and 3-8), one each for inboard and outboard sides.

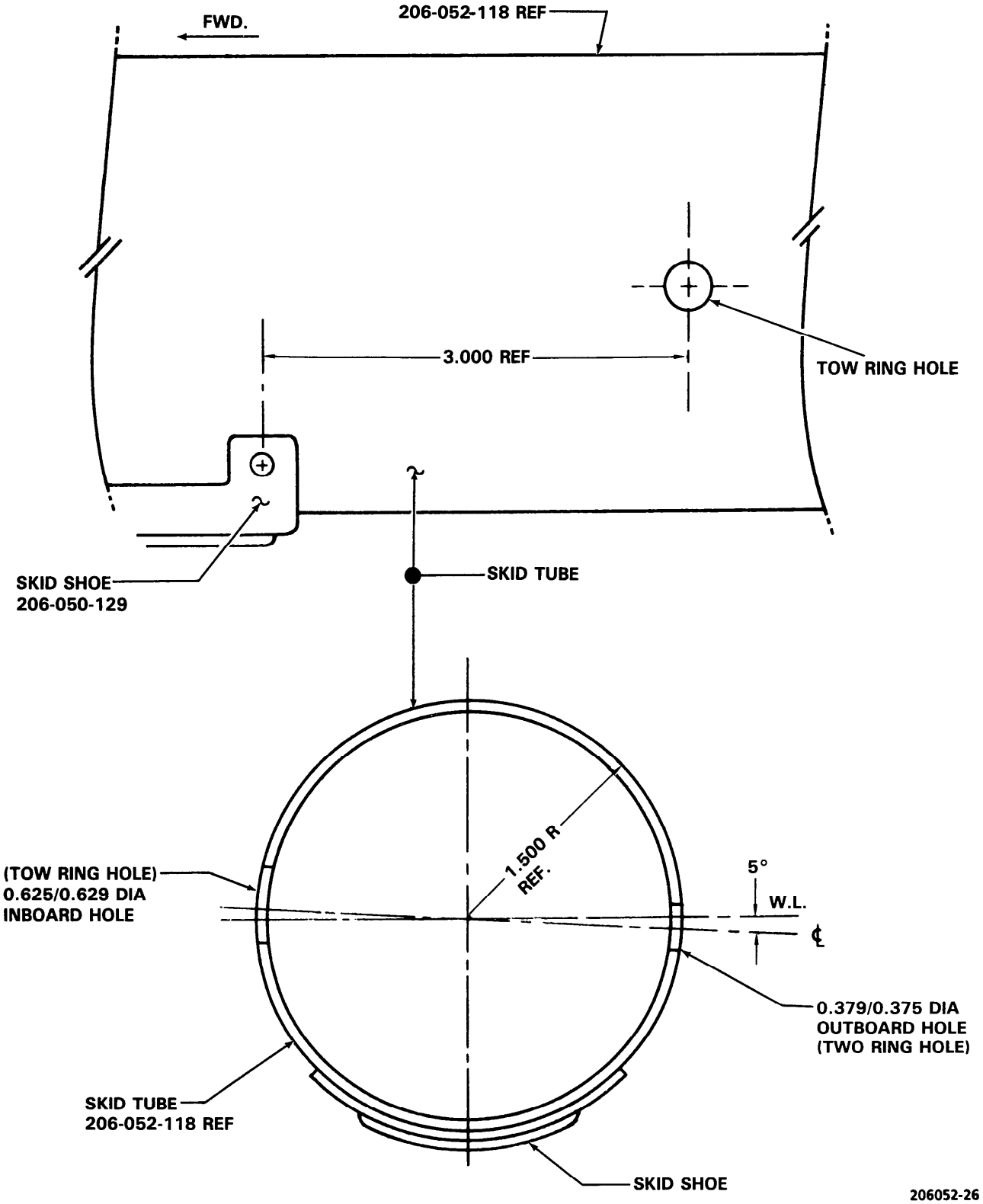

Figure 3-7. Tow Ring Repair

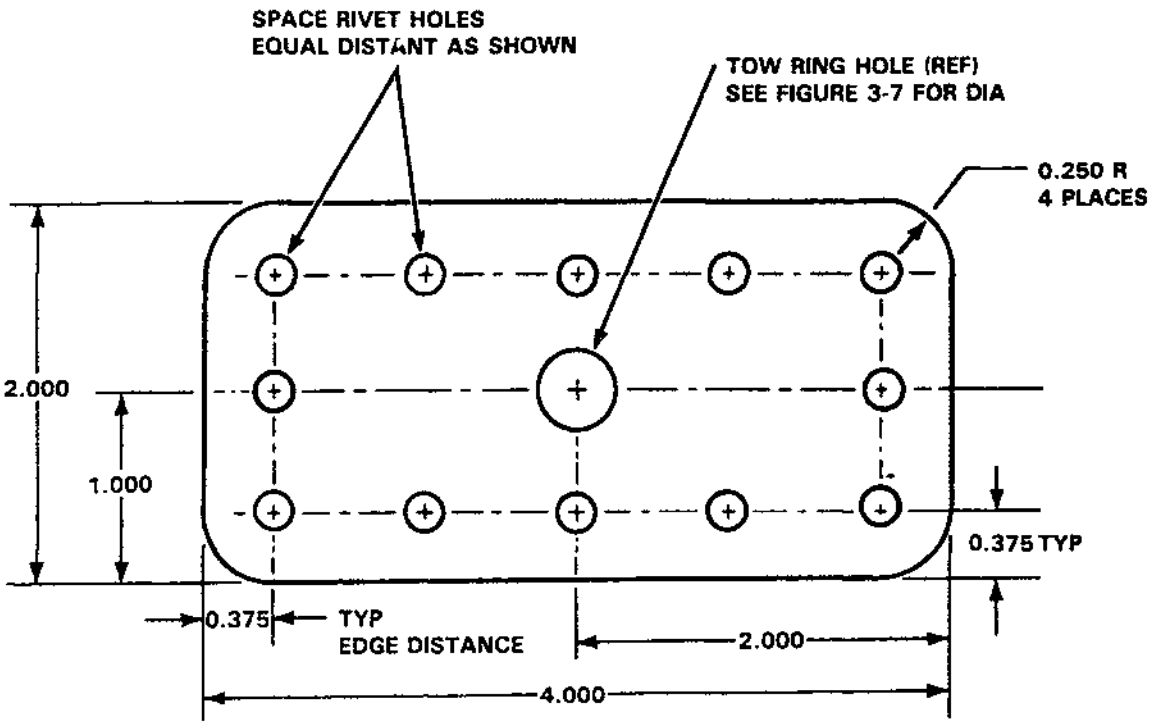

TOW RING ATTACH POINT REINFORCEMENT

1. OUTBOARD AND INBOARD PLATES - SAME SIZE
2. FOR TOW RING HOLE SIZE - SEE FIGURE 3-7
3. MATERIAL: 4.000 X 2.000 X 0.120 INCH 2024 T3-ALUM.
4. CONTOUR TO FIT SKID TUBE
5. ATTACH TO SKID TUBE WITH 0.188 DIA CHERRY RIVETS

Figure 3-8. Tow Ring Doubler Plate

(2) Drill the center holes in doublers; refer to figure 3-7 and 3-8 for hole size and location.

(3) Layout rivet pattern on doubler plates (figure 3-8). Do not drill doubler plates at this time.

(4) Contour doubler plates to fit skid tubes.

(5) Temporarily tape inboard and outboard doubler plates in place. Ensure doubler plates do not interfere with the skid shoes.

(6) If interference exists between skid shoes and doubler plates; trim material from doubler plate to give approximately **0.125** inches clearance and adjust rivet pattern as required.

(7) Clean up tow ring mounting hole area.

(a) Fluorescent penetrant inspect hole area. Refer to TM 55-1500-335-23.

(b) Polish out scratches; trim and smooth tow ring mounting hole.

(c) Repair local skid tube damage if required. Refer to paragraph 3-15, step 3-15a.

(8) Install doubler plates to skid tube as follows: Refer to TM 1-1500-204-23.

(a) Securely clamp doubler plates to skid tube aligning two ring mounting holes.

(b) Drill rivet holes. Remove doubler plates and deburr.

(c) Secure doubler plates in place with rivets; applying sealing compound (C131) under head of rivet.

(9) Seal edges of doubler plate with sealing compound (C131).

(10) Prime (C117) and lacquer (C88) area of repair. Refer to TM 55-1500-345-23.

(11) After installation of doubler plates install two ring fittings as follows:

(a) Install tow ring fitting in skid tube. Install one bushing NAS 75-4-024 over outboard end of tow ring fitting.

NOTE

If bushing (NAS 75-4-024) is too long, remove excess material; if too short use next longer bushing (NAS 75-4-025). Bushing should be flush with doubler plate.

(b) Install bolt (P/N AN 4-5) until threads bottom finger tight. Measure clearance between head of bolt and skid tube.

NOTE

If clearance exceeds 0.126 inches use next shorter bolt (P/N AN 4-4).

(c) Reinstall bolt with two washers and recheck for proper fit to ensure bolt has proper thread engagement. An acceptable alternative is one washer in contact with skid tube and one washer under bolt head.

(d) Remove bolt and washers; coat bolt threads with adhesive (C18) and then install bolt and washers.

3-16. ASSEMBLY — SKID TUBES — STANDARD LANDING GEAR.

a. Insert ends of skid tubes into sockets of saddles (figure 3-9).

b. Install screws through saddles of skid tubes. In the event it is impossible to align all of the holes, position the assemblies in the most advantageous position. These skid tube saddle holes which do not align may be elongated (use rat-tail file) to provide for bolt installation. Maximum elongation permitted is **0.090** inch. Hole diameter shall not exceed **0.408** inch.

c. Lower helicopter and remove jacks. Refer to paragraphs 1-38 and 1-42 (if applicable).

3-17. SKID SHOE ASSEMBLY — STANDARD LANDING GEAR.

CAUTION

The maximum weight which can be added to each standard gear skid tube is seven (7) pounds. No weight can be mounted on cross tubes. Exceeding this weight will result in failure of the aircraft cross tube at the fuselage attach location.

3-18. DESCRIPTION — SKID SHOE ASSEMBLY — STANDARD LANDING GEAR. The standard landing gear has two skid tubes with four skid shoes on each. An improved skid shoe configuration may be installed. It has three skid shoes per skid tube.

3-19. INSPECTION — SKID SHOE ASSEMBLY — STANDARD LANDING GEAR. Refer to paragraph 3-5 for inspection of skid shoe assembly.

3-20. REMOVAL — SKID SHOE ASSEMBLY — STANDARD LANDING GEAR (FIGURE 3-9).

a. Raise helicopter so that the skid shoe assembly may be removed. Refer to paragraphs 1-38 and 1-42.

b. Remove four screws securing each skid shoe to the skid tube and remove skid shoes. On improved skid shoe configuration, the forward shoe has 12 screws.

3-21. REPAIR — SKID SHOE ASSEMBLY — STANDARD LANDING GEAR. Minor dents, nicks, and scratches that do not exceed **0.010** inch in depth are considered negligible. Repair is by replacement of skid shoes.

3-22. ASSEMBLY — SKID SHOE ASSEMBLY — STANDARD LANDING GEAR.

a. Install four screws to secure each skid shoe to the skid tube. On improved skid shoe configuration, the forward shoe has 12 screws.

b. Lower helicopter and remove jacks. Refer to paragraphs 1-38 and 1-42 (if applicable).

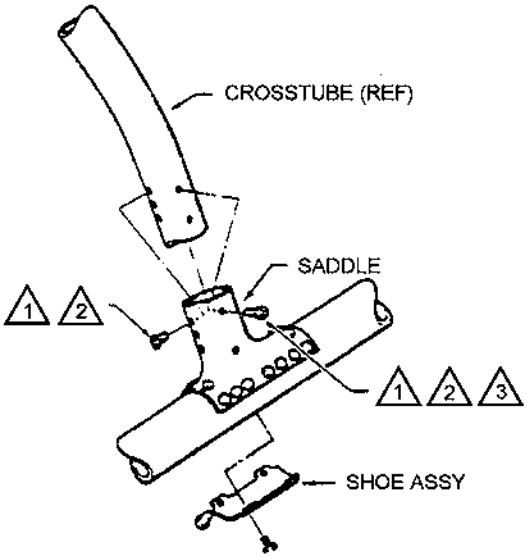

Figure 3-9. Removal of Skid and Skid Shoe (Standard Gear)

3-22.1. ALTERNATE FULL LENGTH SKID SHOE.

3-22.2. CLEANING — FULL LENGTH SKID SHOE.

WARNING

Degreasing Solvent is combustible and toxic to eyes, skin, and respiratory tract. Wear protective gloves and goggles/face shield. Avoid repeated or prolonged contact. Use only in well-ventilated areas (or use approved respirator as determined by local safety/industrial hygiene personnel). Keep away from open flames or other sources of ignition.

a. Clean skid shoe surface with degreasing solvent (C62).

b. Dry skid shoe with a wiping rag (C119.1).

3-22.3. INSPECTION — FULL LENGTH SKID SHOE. Inspect alternate skid shoe for worn runner surface or cracks at the skid shoe attachment points. If cracks at the attachment points are observed, or skid shoe runner is worn to a point of unserviceability; replace skid shoe.

3-22.4. REMOVAL — FULL LENGTH SKID SHOE.

a. Raise helicopter until skid tube is approximately 6-10 inches off the ground. Refer to paragraph 1-38 or 1-42 (if applicable).

b. Remove seven nuts on quick coupler clamps securing skid shoe to skid tube. Refer to figure 3-9.1.

c. Remove skid shoe from skid tube.

3-22.5. INSTALLATION — FULL LENGTH SKID SHOE.

a. Raise helicopter until skid tube is approximately **6-10** inches off the ground. Refer to paragraph 1-38 or 1-42 (if applicable).

b. Remove the original skid shoes if installed. Refer to paragraph 3-20.

NOTE

Fill the original skid shoe screw holes with adhesive, silicone (C18 or equivalent) to prevent water or debris from entering the skid tube.

Clamps shall be facing inboard.

c. Clamp the full length skid shoe onto the skid tube. The quick coupler clamp nuts should not be fully tightened at this time. All quick coupler clamp nuts should be facing inboard.

d. Lower helicopter to the ground and torque the quick coupler clamp nuts to **60 INCH-POUNDS** using the sequence in figure 3-9.1.

e. Make appropriate log book entries and weight and balance computations.

3-23. CROSSTUBES — STANDARD LANDING GEAR.

3-24. DESCRIPTION — CROSSTUBES — STANDARD LANDING GEAR. The standard landing gear consists of two curved aluminum alloy crosstube assemblies.

3-25. INSPECTION — CROSSTUBE — STANDARD LANDING GEAR. Refer to paragraph 3-5 for inspection of crosstubes.

3-26. ACCEPTANCE/REJECTION CRITERIA — CROSSTUBES — STANDARD LANDING GEAR. Refer to figure 3-2 for damage limits to crosstubes.

3-27. REMOVAL/DISASSEMBLY — CROSSTUBES STANDARD — LANDING GEAR.

a. Remove standard landing gear in accordance with paragraph 3-6.

b. To separate skids from crosstubes proceed as follows:

(1) Remove screws at saddles of skid tubes.

(2) Pull ends of crosstubes from sockets of saddles.

3-28. REPAIR — CROSSTUBES — STANDARD LANDING GEAR.

a. The only repair permitted to a crosstube is to polish out scratches and nicks that do not exceed the limitations provided in figure 3-2 and paragraph 3-5, step 3-5b.

Figure 3-9.1. Alternate Full Length Skid Shoe

b. Replace loose or missing rivets attaching strap assembly to crosstube as necessary.

c. Replace strap assembly/modify crosstube as follows:

CAUTION

Use care not to enlarge any holes in strap assembly or crosstube when removing rivets.

NOTE

Unmodified strap assembly requires removal of four rivets.

(1) Drill out the two attaching rivets.

(2) Apply heat, not in excess of 180° F to strap assembly to loosen strap from crosstube.

(3) Remove strap assembly.

NOTE

Use plastic or acrylic tools to remove sealant, do not use metal.

(4) Clean all sealant from strap assembly and crosstube.

NOTE

Proper preparation of holes is critical.

(5) Clean out and deburr all rivet holes (internally and externally).

(6) Inspect area around each of two rivet holes in strap assembly for corrosion. Check for rivet hole elongation, fretting, improper installation, cuts, gashes or dents.

(7) Inspect each rivet hole in crosstube for cracks using fluorescent penetrant. If cracks are found, replace crosstube assembly.

NOTE

Strap assembly is made of titanium. To assure an adequate bond it is important strap surface is properly prepared. It may be necessary to grit blast bonding surface of strap to ensure an adequate bond. Refer to TM 1-1500-204-23 for adhesive data.

(8) Align serviceable strap assembly in place on crosstube. Mark location with felt tip pen, observe correct longitudinal and lateral locations.

(9) Bond strap assembly in place with adhesive (C19).

NOTE

Selection of rivets that have correct grip length for total thickness (starp and crosstube thickness) is critical.

Strap assembly may have four rivet holes. Install rivets in fore and aft holes only.

(10) While adhesive is wet, install two rivets, P/N M7885/3-6-04 wet with epoxy primer (C116), to secure strap assembly to crosstube.

WARNING

MIL-S-8802CLB2 adhesive is flammable and toxic. Good general ventilation is normally adequate. Skin and eye protection is required. Avoid all sources of ignition.

(11) Apply a bead of sealing compound (C131) around the outer mating edge of the strap and crosstube. If required, fill top rivet holes with sealant (C131).

(12) Allow adhesive and sealing compound to cure.

WARNING

Paint and primer are toxic and flammable. They can irritate skin and cause burns. Use only in well-ventilated area away from heat and open flame. Wear rubber gloves and goggles. In case of contact, immediately flush skin or eyes with water for at least 15 minutes. Get medical attention for eyes.

(13) Apply primer (C117) and lacquer (C88) on all exposed areas of the crosstube in accordance with TM 55-1500-345-23.

3-29. REPAIR — FITTING ASSEMBLY. Refer to paragraph 3-5, step 3-5g. for corrosion and damage limits. Repair as follows:

a. Strip part and clean off surface corrosion, a maximum of **0.005** inch may be removed.

(1) Remove corrosion using aluminum oxide cloth (C45).

(2) Do not use ferrous materials on aluminum.

(3) Clean with alcoholic phosphoric acid solution Turco No. 1 (C21) and treat with alodine coating (C38), then repaint with epoxy polyamide primer (C116).

b. Remove all burrs and sharp corners caused by damage to fitting assemblies.

3-30. INSTALLATION/REASSEMBLY - CROSSTUBES - STANDARD LANDING GEAR.

a. Assemble skids and crosstubes as follows:

(1) Insert ends of crosstubes into sockets of saddles (figure 3-9).

(2) Install screws at saddle of skid tubes.

(3) Apply a bead of sealant (C129) to the top of the saddle.

b. Install standard landing gear in accordance with paragraph 3-8.

3-31. LANDING GEAR SUPPORT FITTINGS.

3-32. DESCRIPTION. Four identical landing gear fittings are bolted to the lower fuselage. These fittings are used to install the landing gear and the float landing gear.

3-33. REMOVAL. Remove the bolts, nuts and washers securing the fittings to the airframe. Note that the bolts are not all the same length.

3-34. INSPECTION.

a. Corrosion cannot effect more than 20% of surface area.

b. Corrosion pits cannot be wider than **0.060** and must be separated by at least **0.200** inch.

c. Wear on the fittings caused by contact and chafing from rivet collars on the landing gear control cannot exceed **0.025** inch.

3-35. REPAIR.

a. Strip fitting and remove corrosion using an aluminum oxide cloth (C45). (Do not use ferrous materials on aluminum.) Not more than 10% of local thickness can be removed.

b. Remove all burrs and sharp corners created by damage to the fitting.

c. Clean repaired area with alcoholic phosphoric acid solution Turco No. 1 (C21), then treat with alodine coating (C38) and reprime with epoxy polyamide primer (C116).

3-36. INSTALLATION.

a. Use proper length of bolt and install nuts when required. Ensure bolts are installed in correct location. Install a washer under the head of each bolt and under each nut.

b. Apply a thin bead of sealant (C129) to the mating surfaces of the fitting and airframe in order to prevent water from entering the fitting recessed areas. After installation, apply a bead of sealant around the mounting edge of the fittings.

3-37. HIGH LANDING GEAR.

3-38. DESCRIPTION — HIGH LANDING GEAR. The high landing gear is similar to the standard landing gear except that it is constructed of tubing with increased wall thickness. The skid tubes are longer and the crosstubes provide increased height and stance. A right and left side step assembly is mounted on the forward crosstube.

NOTE

When replacing standard landing gear with high landing gear, the aircraft must be weighed and the weight and balance records updated.

3-39. CLEANING — HIGH LANDING GEAR. Refer to paragraph 1-18 and TM 55-1500-333-24 for cleaning procedures.

3-40. INSPECTION — ACCEPTANCE/REJECTION CRITERIA - HIGH LANDING GEAR.

a. Raise helicopter approximately **1.000** inch and level helicopter on jacks, so that landing gear is relieved of weight. Refer to paragraphs 1-38 and 1-42.

b. Determine center of either crosstube by measurement between bearing straps. Drop a plumb line from center of crosstube to ground (figure 3-1).

c. Measure from plumb line to center of each stud at crosstube attachment point. Normal dimension is **42.000** inches. If any measurement exceeds **43.000** inches from skid center line, replace defective crosstube.

d. Inspect crosstubes for scratches, nicks, and dents.

NOTE

Scratches, nicks, and dents of less than 0.005 inch in depth are considered negligible.

(1) Circumferential scratches and nicks that exceed **0.005** inch depth and not exceeding a 45 degree arc may be polished out to the limits shown in figure 3-10.

(2) Longitudinal scratches and nicks of any length that exceed **0.005** inch depth may be polished out to the limits shown in figure 3-10.

e. Inspect skid tubes for scratches, nicks, and dents.

(1) Circumferential scratches and nicks are not to exceed **0.005** inch in depth and an arc of 90 degrees.

(2) Scratches, scuffs, and nicks running longitudinally may be of any length but are not to exceed **0.050** inch in depth.

(3) Smooth dents are not to exceed **0.250** inch depth and **1.000** inch diameter.

(4) Corrosion damage is not to exceed **0.050** inch depth over an area greater than 1/4 the tube circumference by **3.000** inches in length.

NOTE

Scratches, nicks, and dents of any depth and length aft of the aft crosstube saddle and in the curved portion forward of the forward crosstube saddle are considered negligible, but holes should be plugged to prevent water entrapment.

f. Inspect skid shoes for wear, damage, and security.

g. Inspect tow rings for security and damage.

h. Inspect ground handling trucks attachment fittings for security.

i. Inspect crosstube strap rubber cushions for cracks, deterioration, and embrittlement. This type of deficiency is cause for cushion replacement. To bond replacement cushion use adhesive (C9). Inspect for fuselage shift on skid crosstubes. Some shift is acceptable except when clearance between crosstube rivet rows and airframe is **0.010** inch or less.

j. Inspect saddle for loose rivets and cracks. Replace rivets if loose and replace skid tube if saddle is cracked.

3-41. REMOVAL - HIGH LANDING GEAR.

a. Raise helicopter to allow removal of landing gear from helicopter. Refer to paragraphs 1-38 and 1-42.

b. Remove bolts and washers from each strap assembly securing the crosstubes to the bottom of the helicopter.

c. Remove the four cap assemblies and identify the strap according to original location.

NOTE

Additional raising of helicopter may be required to allow removal of the landing gear from the helicopter.

3-42. REPAIR - HIGH LANDING GEAR. Refer to paragraphs 3-49, 3-67, and TM 1-1500-204-23 for repair procedures.

3-43. INSTALLATION - HIGH LANDING GEAR.

NOTE

Remove paint at mounting points to ensure good electrical grounding.

a. Position landing gear and carefully lower helicopter to seat at four mounting points of structural beams (fitting assemblies) on bearing straps of crosstubes. Make sure that the fitting assemblies are centered between the rivets on the crosstubes.

NOTE

b. Install four cap assemblies at correct locations. Refer to paragraph 3-61.

c. Install inboard and outboard steps on forward crosstube. Refer to figure 3-11.

d. Lower helicopter and remove hoist and shackle.

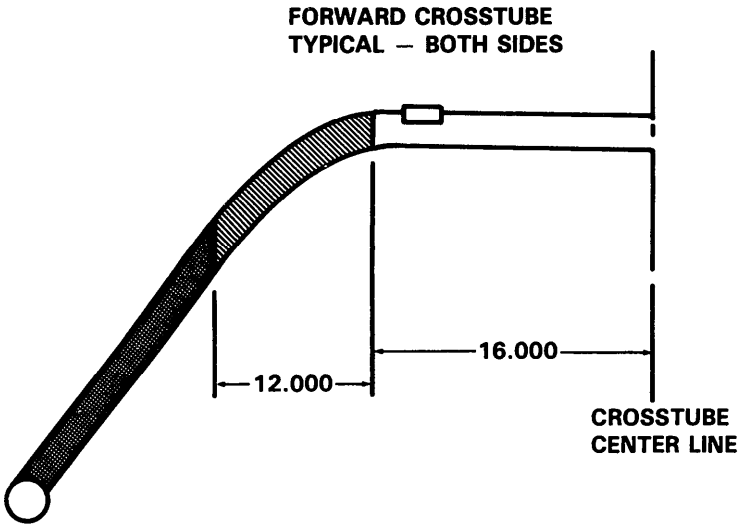

TYPE OF DAMAGE			
	MAXIMUM DAMAGE AND REPAIR DEPTH		
NICKS AND SCRATCHES	0.014	0.011	0.009

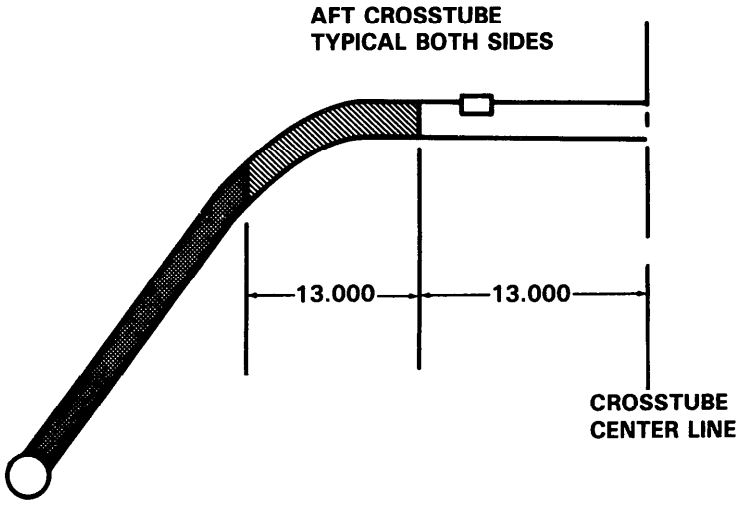

TYPE OF DAMAGE			
	MAXIMUM DAMAGE AND REPAIR DEPTH		
NICKS AND SCRATCHES	0.035	0.027	0.016

NOTE: All dimensions are in inches.

206052-29

Figure 3-10. High Landing Gear Crosstube Inspection Limits

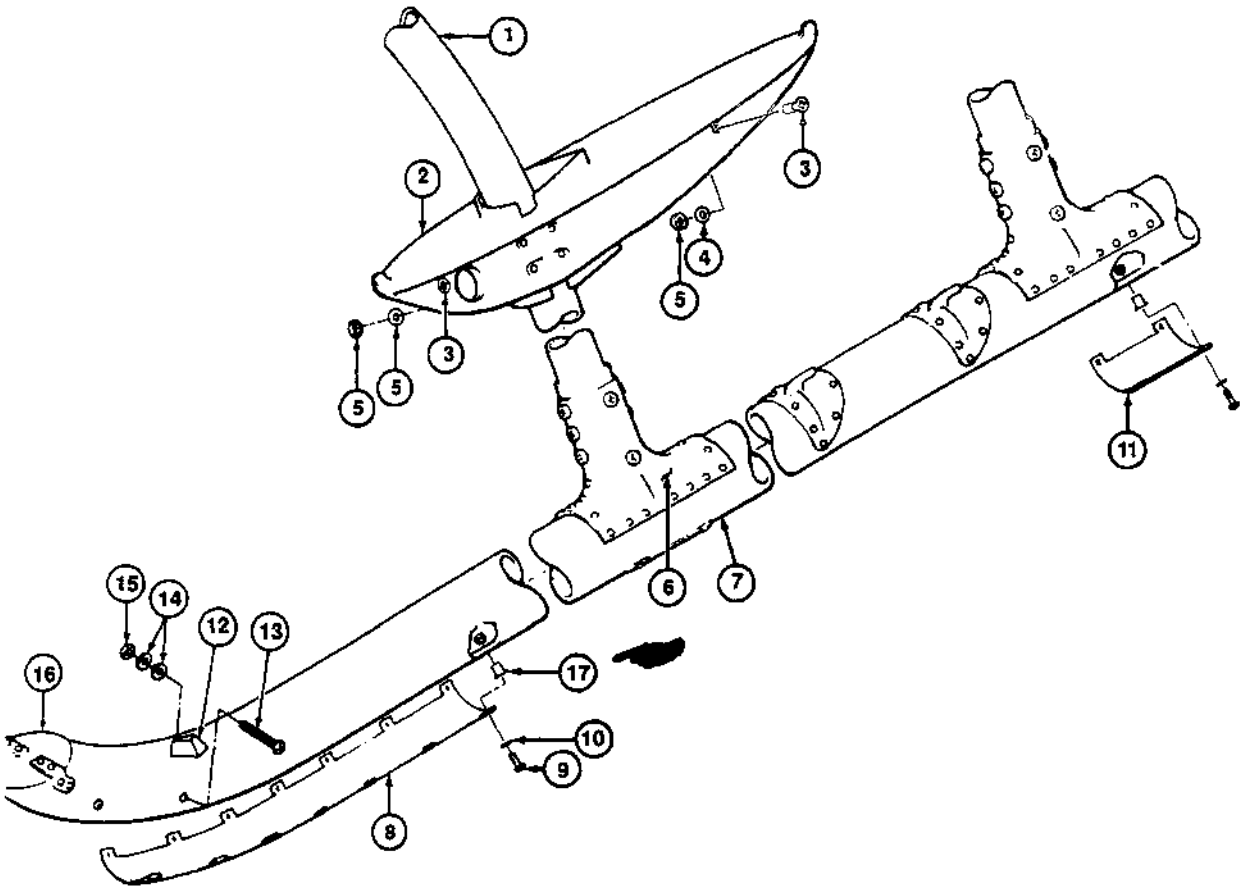

1. Crosstube
2. Step
3. Screw
4. Washer
5. Nut
6. Saddle
7. Skid
8. Skid Shoe, Fwd
9. Screw, Machine
10. Washer
11. Skid Shoe, Aft
12. Ballast Weight
13. Screw
14. Washer
15. Nut
16. Cap
17. Rivit Blind

Figure 3-11. High Landing Gear Step, Skid Shoe, and Ballast Installation (Sheet 1 of 2)

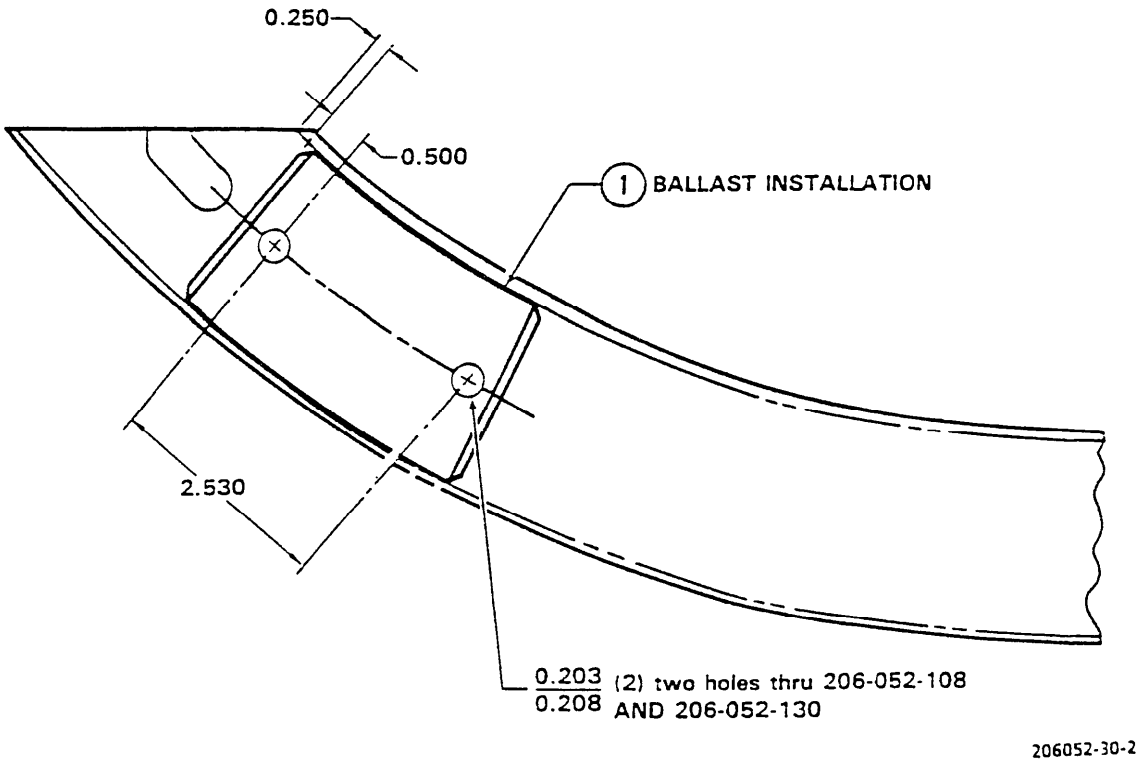

Figure 3-11. High Landing Gear Step, Skid Shoe, and Ballast Installation (Sheet 2 of 2)

3-44. SKID TUBES — HIGH LANDING GEAR.

3-45. DESCRIPTION — SKID TUBES — HIGH LANDING GEAR. The skid tubes of the high landing gear system are longer than the standard landing gear system and are equipped with only two shoes on each skid tube.

3-46. INSPECTION — SKID TUBES — HIGH LANDING GEAR. Refer to paragraph 3-40 for inspection of skid tubes.

3-47. REMOVAL/DISASSEMBLY — SKID TUBES — HIGH LANDING GEAR.

a. Raise helicopter so that skid tubes may be removed. Refer to paragraphs 1-38 and 1-42 (if applicable).

b. Remove bolts and washers at saddles of skid tubes.

c. Pull end of skid tubes from sockets of saddles (figure 3-4).

3-48. INSPECTION — ACCEPTANCE/REJECTION CRITERIA — SKID TUBES — HIGH LANDING GEAR (FIGURE 3-13).

a. Negligible damage:

(1) Circumferential scratches and nicks in the skid tubes not to exceed a depth of **0.050** inch and an arc of **90** degrees.

(2) Scratches, scuffs, nicks longitudinally in the skid tube may be of any length but not to exceed a depth of **0.050** inch.

(3) Smooth dents in the skid tubes which do not exceed **0.250** inch in depth and **1.000** inch in diameter.

(4) Corrosion damage not exceeding **0.050** inch deep over an area not exceeding 1/4 the circumference by **3.000** inches in length.

(5) Scratches, dents, and nicks of any depth and length in the curved portion only of the tube forward of the forward crosstube saddle.

b. Reparable damage.

(1) Scratches, scuffs, and nicks exceeding **0.050** inch deep may be repaired by patching.

(2) Smooth or sharp dents exceeding **1.000** inch diameter and/or **0.250** inch depth, but not to exceed **2.000** inches in diameter may be repaired by patching.

(3) Holes in the skid tubes up to a diameter of **2.000** inches through one surface of the tube only may be repaired by patching.

(4) Scratches, dents, and holes in excess of the **2.000** inch limit may be repaired by splicing in a new section of tubing.

c. Damage requiring replacement.

(1) Damage to the skid tube in excess of the reparable limits necessitates replacement.

(2) Damage to the skid tube within the **3.000** inches of the crosstubes saddles and in excess of the negligible limits necessitates replacement.

(3) Dent limits are the same as those specified for nicks and scratches in figure 3-10. No sharp dents are permitted.

3-49. REPAIR — SKID TUBES — HIGH LANDING GEAR.

a. To repair by patching proceed as follows:

(1) Polish out scratches, trim and smooth holes.

(2) Fabricate a patch from **0.156** inch aluminum alloy sheet, or unserviceable skid tube of required side (figure 3-5).

(3) Lay out rivet hole pattern and form patch to fit contour of skid tube.

(4) Secure clamp patch in place on skid tube and drill rivet holes using a number 10 drill.

(5) Deburr and rivet patch in place using 3/16 inch diameter blind type rivets.

(6) Apply primer (C117) and lacquer (C88) in accordance with TM 55-1500-345-23.

b. To repair by insertion, proceed as follows:

NOTE

Dents and holes on either top or bottom sides of skid tube, which are greater than two inches across in any direction shall be repaired by inserting a splice of new tubing. Such repairs are restricted to areas shown in figure 3-13.

(1) Cut out damaged portion of skid tube with metal saw.

(2) Fabricate an insert of required length from tube of **0.156** inch wall thickness or from unserviceable tube as shown in figure 3-6.

(3) Fabricate splice plates as follows:

(a) Cut four plates to required dimensions as shown in figure 3-6 from sheet stock **0.156** inch thick or use material salvaged from unserviceable tube.

(b) Form two plates to fit the outside diameter of skid tube and two plates to fit inside diameter of tube.

(4) Apply a coat of sealing compound (C131) to plates and tube.

(5) Layout rivet hole pattern on upper splice plates and lower side of tube.

(6) Maintaining proper alignment, securely clamp splice plates and tubes together.

(7) Drill rivet holes in plates and tubes with a number 10 drill. Countersink lower holes with a 100-degree countersink. Deburr and install 3/16 inch diameter blind rivets in upper half of splice and 3/16 inch diameter flush rivets in lower half.

(8) Apply touchup coat of primer (C117) and acrylic lacquer (C88) in accordance with TM 55-1500-345-23.

3-50. INSTALLATION/REASSEMBLY — SKID TUBES — HIGH LANDING GEAR.

a. Insert ends of skid tubes into sockets of saddles (figure 3-4).

b. Install screws at saddles of skid tubes. In the event it is impossible to align all the holes, position the assemblies in the most advantageous position. These skid tube saddle holes which do not align may be elongated (use rat-tail file) to provide for bolt installation. Maximum elongation permitted is **0.090** inch. Hole diameter shall not exceed **0.408** inch.

c. Lower helicopter and remove jacks. Refer to paragraphs 1-38 and 1-42 (if applicable).

WARNING

Ballast weights must be installed in skid tubes prior to operation of helicopter.

d. If ballast weights are not installed, proceed as follows:

(1) Remove cap (16, figure 3-11).

(2) Drill mounting holes in skid tube (7) and ballast weight (12), refer to figure 3-11 for dimensions.

(3) Install ballast weights (12), screws (13), washers (14), and nut (15).

(4) Install cap (16) using blind rivets.

NOTE

If helicopter has not been weighed with high landing gear and ballast weights installed, it must be accomplished prior to operation.

3-51. SKID SHOE ASSEMBLY — HIGH LANDING GEAR.

3-52. DESCRIPTION — SKID SHOE ASSEMBLY — HIGH LANDING GEAR. The skid shoe assemblies of the high landing gear are located on the bottom of each skid tube; one long shoe on front and one short shoe on the aft section of each skid tube. Refer to figure 3-11.

3-53. INSPECTION — SKID SHOE ASSEMBLY — HIGH LANDING GEAR. Refer to paragraph 3-40 for inspection of skid shoes.

3-54. REMOVAL — SKID SHOE ASSEMBLY — HIGH LANDING GEAR.

a. Raise helicopter so that the skid shoe assembly may be removed. Refer to paragraphs 1-38 and 1-42.

b. Remove screws securing each skid shoe to the skid shoes and remove shoes.

3-55. REPAIR — SKID SHOE ASSEMBLY — HIGH LANDING GEAR (AVIM).

a. Minor nicks, dents, and scratches that do not exceed **0.010** inch in depth are considered negligible.

b. Damage to skid shoes in excess of the above negligible limits may be repaired by hot reforming, reshaping, or welding as follows: (Refer to figure 3-14.)

(1) Excessive dents in attaching skid shoe tab may be hot reformed or reshaped provided dents do not exist within a minimum distance of **2.000** inches of any borium weld bends.

CAUTION

Prior to any welding repair, remove the skid shoe from skid tube to avoid damage to the aluminum skid tube from excessive heat.

(2) Remove necessary hardware and detach skid shoe from skid tube.

(3) Elongated holes in attaching tabs of shoe may be repaired as follows:

(a) Fabricate an appropriate circular or elongated doubler of 4130 steel, **0.050** inch thickness, normalized per MIL-S-18729, as shown on figure 3-14, detail C.

(b) On all repairs requiring welding the cadmium plating should be removed from both surfaces prior to welding.

(c) Secure doubler to shoe tab by welding (arc or gas method), Specification MIL-W-8611, around entire periphery of doubler.

(4) Severely damaged shoe tabs may be repaired or replaced as follows: Refer to details A and B, figure 3-14.

(a) Cut off damaged tab parallel to skid tube, or, if damaged tab can be straightened, reshape to original configuration.

(b) If damaged tab has been cut from shoe, fabricate a similar tab from normalized 4130 steel, specification MIL-S-18729, **0.050** inch thickness. Butt weld, specification MIL-W-8611, fabricated tab along cut line of shoe. Grind weld smooth on side adjacent to skid tube.

(c) If damaged tab has been reshaped to original configuration, fabricate a doubler from same material in preceding step b. Position doubler over existing tab and weld all around contact area of doubler and shoe. Refer to figure 3-14, detail C.

3-56. ASSEMBLY — SKID SHOE ASSEMBLY — HIGH LANDING GEAR.

a. Install screws to secure each skid shoe to the skid tube.

b. Lower helicopter and remove jacks. Refer to paragraphs 1-38 and/or 1-42 (if applicable).

3-57. CROSSTUBE SUPPORTS.

3-58. CROSSTUBE SUPPORTS (FIGURE 3-12) DESCRIPTION. The crosstube is attached to the fuselage by four supports, two on each crosstube. The forward supports are a rigid type, the aft supports are spring loaded to reduce vibration during flight. The aft support is shown at figure 3-12.

3-59. CROSSTUBE SUPPORTS — REMOVAL.

a. Remove two bolts and two washers (3) securing crosstube support to fitting (5).

b. Remove support (2) from aircraft.

3-60. CROSSTUBE SUPPORTS — INSPECTION AND REPAIR.

a. Inspect both fore and aft supports for nicks and damage.

b. If there is any doubt concerning the serviceability of the aft support, disassemble the support and replace all four springs.

c. Install washer between spring and two halves of support as necessary to ensure that strap is a snug fit on the crosstube. Spring dimension with support assembled should be **0.500** to **0.560** inches (refer to figure 3-12). Install cotter pins on the completion of assembly.

3-61. CROSSTUBE SUPPORTS — INSTALLATION.

a. Position strap over crosstube ensuring even contact between strap and crosstube.

b. Install two bolts and two washers at each location.

3-62. CROSSTUBES — HIGH LANDING GEAR.

3-63. DESCRIPTION — CROSSTUBES — HIGH LANDING GEAR. The landing gear system is constructed of two tubular curved aluminum alloy crosstubes with increased wall thickness. The crosstube provides increased height and stance and right and left side step assemblies are mounted on the forward crosstube.

3-64. INSPECTION — CROSSTUBES — HIGH LANDING GEAR. Refer to paragraph 3-40.

3-65. ACCEPTANCE/REJECTION CRITERIA — CROSSTUBES — HIGH LANDING GEAR.

a. Remove high landing gear in accordance with paragraph 3-41.

b. To separate skids from crosstubes proceed as follows:

(1) Remove bolts and washers at saddles of crosstubes.

(2) Pull ends of crosstubes from sockets of saddles.

3-67. REPAIR — CROSSTUBES — HIGH LANDING GEAR. The only repair permitted for a crosstube is to polish

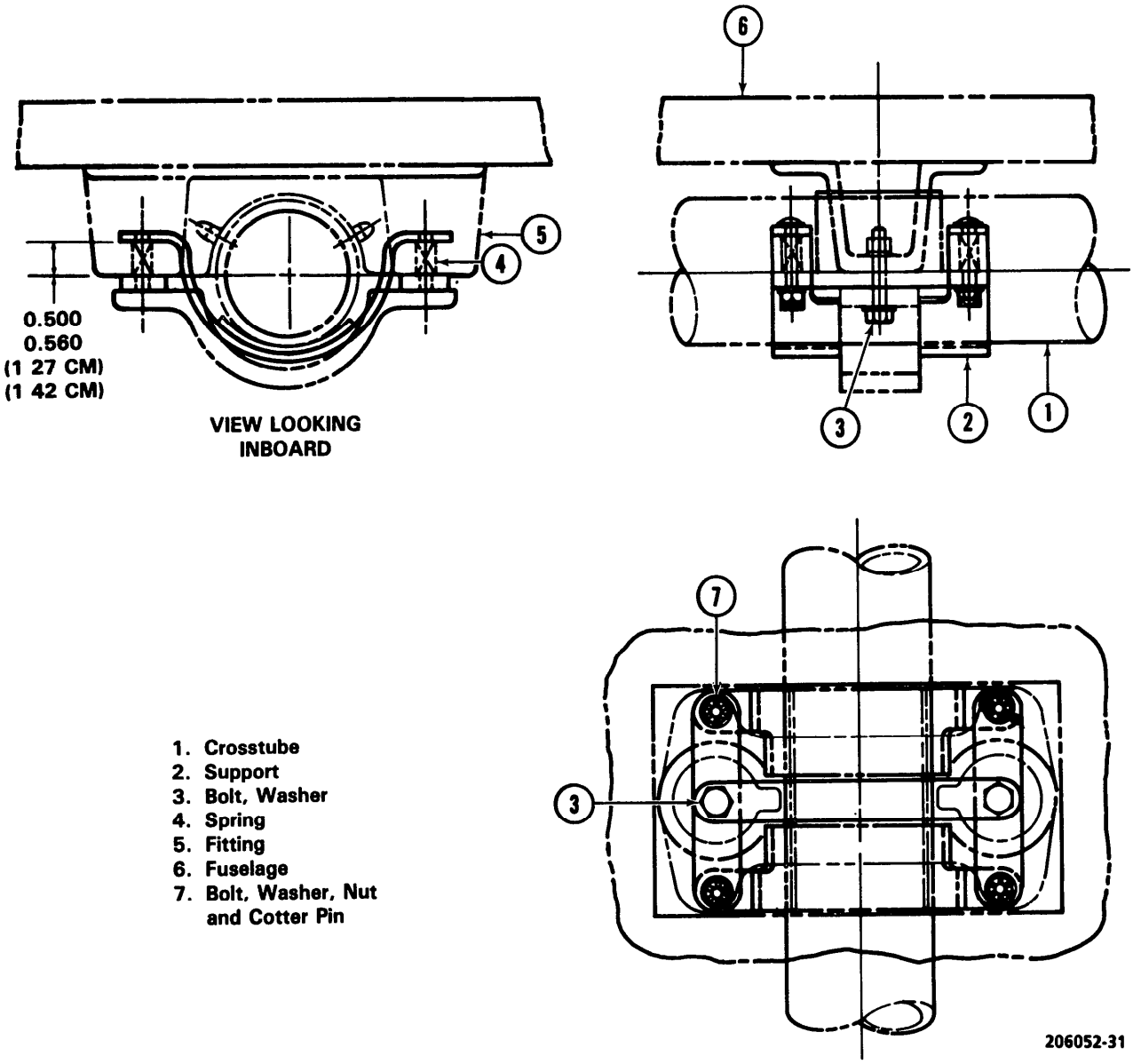

Figure 3-12. Aft Crosstube Support Assembly

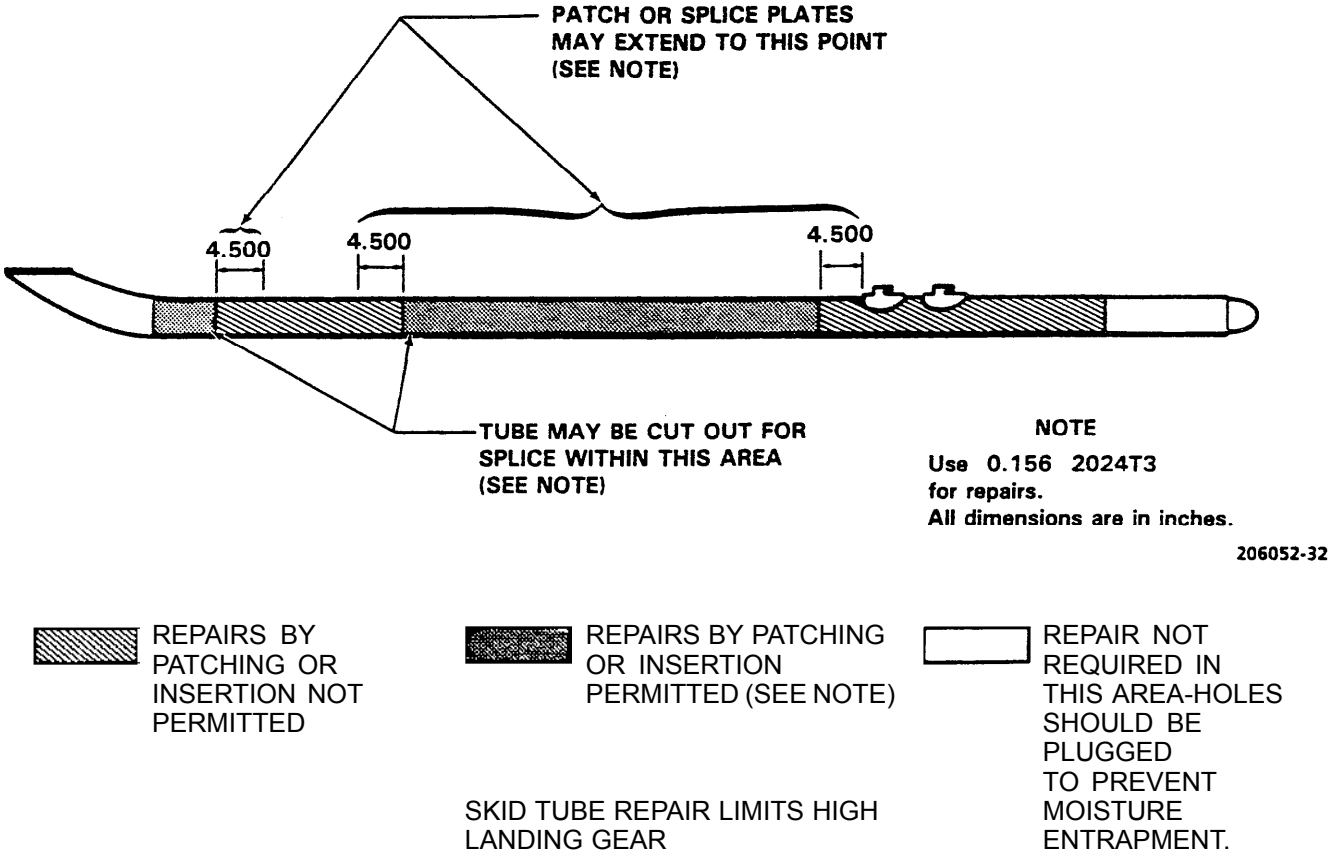

Figure 3-13. High Landing Gear Skid Tube Repair Limits

out scratches and nicks that do not exceed the limitations provided in figure 3-10.

3-68. ASSEMBLY — CROSS TUBES — HIGH LANDING GEAR.

a. Assemble crosstubes and skids as follows:

(1) Insert ends of crosstubes into sockets of saddles (figure 3-4).

(2) Install high landing gear system in accordance with paragraph 3-43.

3-69. INTERCHANGE OF STANDARD GEAR WITH HIGH LANDING GEAR.

a. The purpose of the following instructions is to provide interchangeability of a standard gear with a high clearance skid gear.

b. To perform a skid interchange the following items are required.

QUANTITY	PART NUMBER	NOMENCLATURE
1	206-706-129-1	Kit, high gear tubular skid consisting of:
2	206-050-221-7	Support assembly
2	206-052-105-13	Strap assembly
1	206-052-108-13	Landing gear assembly
4	AN960PD416	Washer
4	NAS1304-13	Bolt

NOTE 1

Fabricate doubler of normalized 4130 steel, MIL-S-18729, 0.063 inch thickness and of same configuration as damaged tab.

NOTE 2

Fabricate doubler of normalized 4130 steel, MIL-S-18729, and of same configuration as removed tab. Grind weld smooth on side adjacent to skid tube.

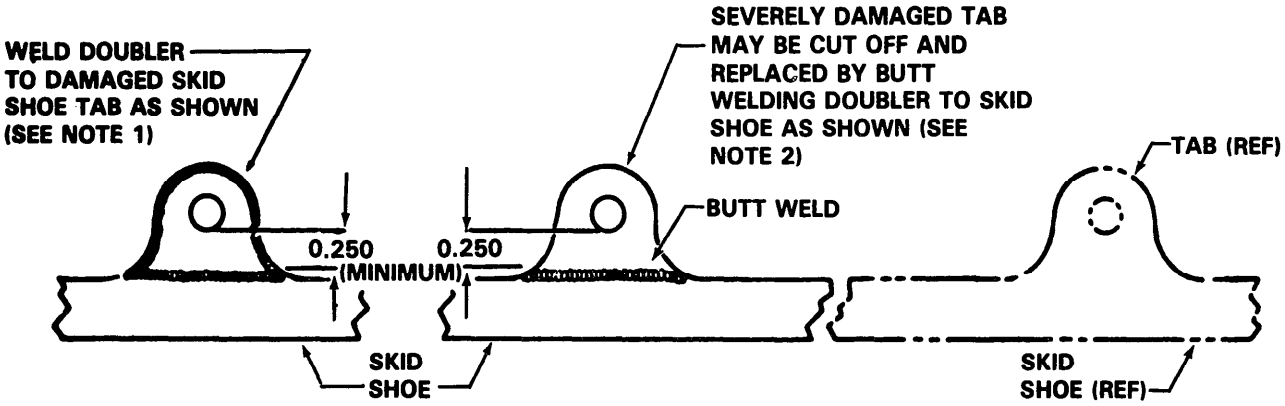

DETAIL A
(TAB REPAIR)

DETAIL B
(TAB REPLACEMENT)

SKID SHOE REPAIR/REPLACEMENT (TYPICAL)

NOTE: All dimensions are in inches.

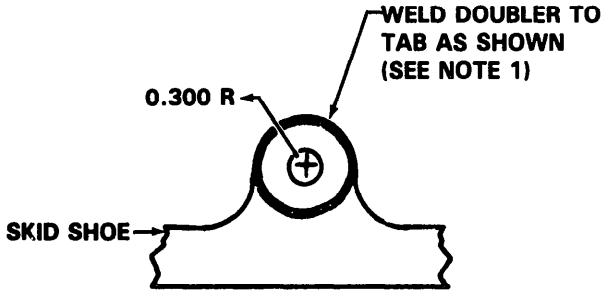

DETAIL C
(CIRCULAR DOUBLER REPAIR)

206052-33

Figure 3-14. Repair of Landing Gear Skid Tube Shoes

c. Prepare the helicopter for safe ground maintenance. Refer to paragraphs 1-38 and 1-42 and proceed as follows:

(1) Remove the existing standard landing gear as outlined in paragraph 3-6. Identify the removed gear assembly and aft crosstube attaching hardware for original installation location and helicopter serial number. Except for the forward crosstube strap assemblies and the helicopter tow rings, retain all removed items in a preserved condition for future reinstallation.

(2) Remove tow rings attached to the forward ends of the standard gear skid tubes. Retain hardware.

(3) Using retained hardware, install tow rings on the forward ends of the high gear skid tubes.

(4) Raise helicopter as necessary to allow installation of high skid gear.

(5) Place high skid gear in position and lower helicopter onto skid gear.

(6) Secure forward crosstube with strap assemblies and hardware previously removed.

(7) Secure aft crosstube with two support assemblies, two restraining strap assemblies, four bolts, and four washers. Refer to figure 3-15.

(8) Return helicopter to flight configuration.

d. The installation of the high landing gear system in place of the standard landing gear system affects the helicopter basic weight and balance as follows:

Weight change	—	+63.500 pounds
Moment arm	—	73.700 inches
Moment/100	—	46.800 inch-pounds

e. Accomplish chart C entry (DD Form 365-C, Basic Weight and Balance Record) to reflect the helicopter basic weight change resulting from the landing gear interchange. Refer to TM 55-405-9.

NOTE

Accomplishment of DA Form 2408-5 is not required for skid gear interchange action as this change only concerns the use of special purpose equipment.

f. Interchanging a high landing gear with a standard landing gear may be accomplished by reversing the preceding installation instructions and making the necessary DD Form 365-C entries to reflect new basic weight change.

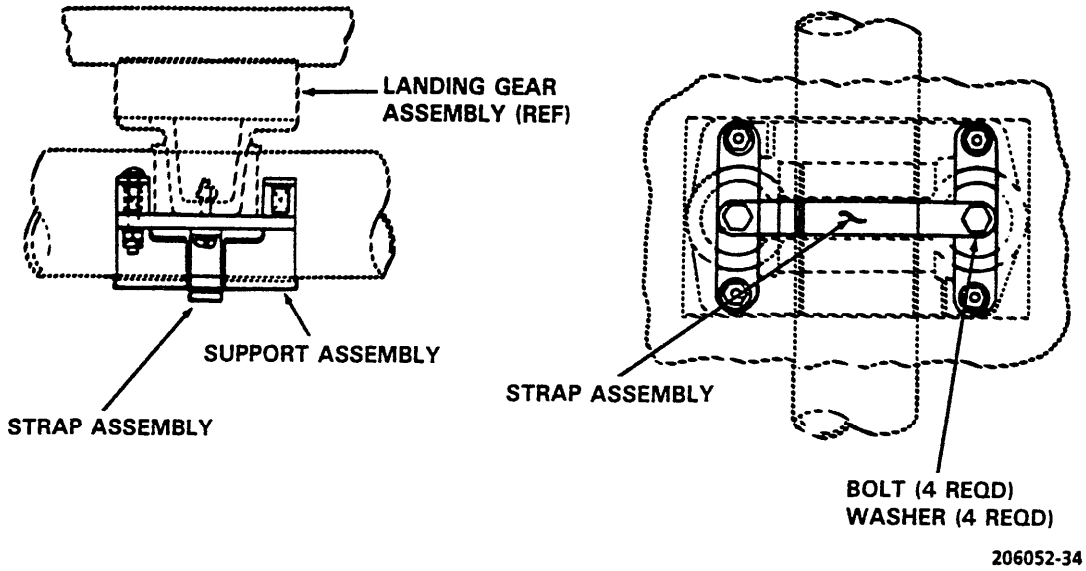

Figure 3-15. High Gear Interchange with Standard Gear

3-70. GROUND HANDLING TRUCKS.

3-71. DESCRIPTION — GROUND HANDLING TRUCKS. The ground handling trucks, installed for towing the aircraft, consist of dual wheels, support, and a retract/extend lever for positioning the assembly manually (figure 3-16).

3-72. REMOVAL — GROUND HANDLING TRUCKS.

a. Release extend/retract lock and retract wheels. Refer to figure 3-16.

b. Release installation lock and slide wheel assembly aft.

3-73. INSTALLATION — GROUND HANDLING TRUCKS.

a. With the wheel assembly retracted, place the assembly over the skid tube.

b. Align the wheel assembly mounting hole with the skid tube fitting arms and slide forward so that arms engage holes. Slide full forward so that installation lock engages the skid tube fitting. Ensure lock is engaged.

c. Inflate ground handling truck tires to **90** psi.

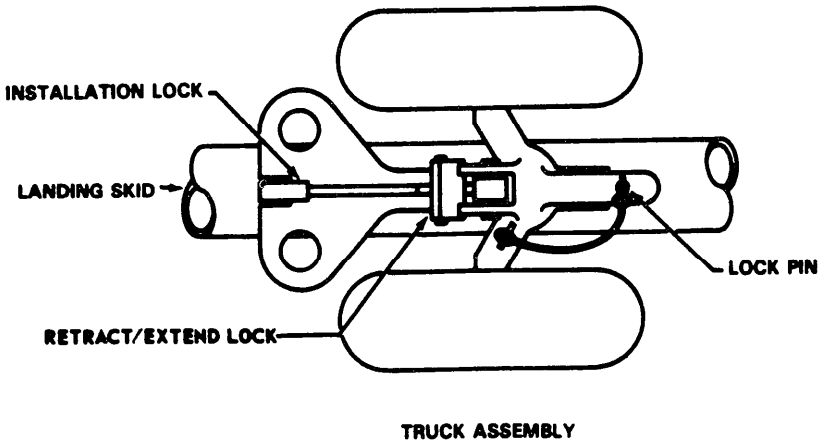

Figure 3-16. Ground Handling Trucks

3-73.1. HANDLE — JACK ASSEMBLY, GROUND HANDLING.

3-73.2. DESCRIPTION — JACK ASSEMBLY. The jack assembly or actuating handle is used in conjunction with the ground handling trucks for raising helicopter after installation of truck assemblies.

Deleted

Deleted Figure 3-16.1

SECTION II. SKIDS AND STRUTS

(Not applicable)

SECTION III. FLOAT LANDING GEAR SYSTEM

3-74. FLOAT LANDING GEAR.

3-75. DESCRIPTION — FLOAT LANDING GEAR. The float landing gear system consists of two streamlined multi-cell, inflatable floats, float support tubes, crosstubes, and necessary fittings required to equip the helicopter for water landings. A triangular plate is mounted on the tail skid for controllability purposes and to protect the tail rotor in the event of a tail low landing on the water. Floats can only be installed after compliance with MWO 55-1520-228-30-21.

3-76. CLEANING — FLOAT LANDING GEAR. Refer to paragraph 1-18 for general helicopter cleaning.

3-77. INSPECTION — FLOAT LANDING GEAR.

a. Inspect floats daily when in use to ensure inflation pressure of **1-1/2** psi is maintained.

b. Inspect support tubes and crosstubes for mechanical damage and corrosion. Damage must not exceed **10%** of the tube wall thickness after cleanup.

c. Inspect floats periodically for cuts, tears, security, and deterioration.

3-78. REMOVAL — FLOAT LANDING GEAR.

a. Support helicopter with hoist, but do not raise.

b. Remove bolts and washers at straps that attach crosstubes to fuselage.

c. Disconnect electrical connector from bottom of fuselage and install protective cap from dummy connector.

d. Raise helicopter off landing gear.

3-79. DISASSEMBLY — FLOAT LANDING GEAR.

a. Remove nuts (22, figure 3-17) and washers (23) that connect forward crosstube and aft crosstube to float support tubes (15 and 16) (view B-B). Remove straps (18 and 30). Remove crosstubes (6 and 5). Remove U-bolt (20). Remove blocks (19 and 29).

b. Remove clamps, screws, washers, and nuts (21) that secure step to float support tubes (15). Remove four steps from float. (Figure 3-17, view C-C.)

3-80. REPAIR — FLOAT LANDING GEAR.

a. Repair minor holes (pin holes) in floats as follows:

(1) Deflate float.

(2) Clean surface to be repaired with naphtha (C22).

(3) Coat surface with urethane adhesive (C20).

(4) Cover adhesive with teflon tape (C144) smooth out all air bubbles, and tape (C143) teflon tape to hold in place until adhesive is cured.

(5) Cure at room temperature for **24** hours.

(6) Remove tape and teflon tape (C144).

b. Repair major damage (cuts and large holes) in floats as follows:

(1) Cut patch from urethane impregnated nylon one to two inches longer than hole to be repaired.

(2) Clean area of float to be patched and mating surface of patch with naphtha (C22).

(3) Apply urethane adhesive (C20) to both surfaces, then place bond surfaces together with firm pressure. Smooth out all air bubbles.

(4) Cure for **24** hours at room temperature with patch held firmly in place.

(5) Remove pressure and clean off excess adhesive with naphtha (C22).

3-81. ASSEMBLY — FLOAT LANDING GEAR.

NOTE

The following steps are typical and are to be accomplished on both floats at the same time.

a. Spread float bag flat with filler valves (17, figure 3-17) upright.

NOTE

Partially inflate floats to facilitate assembly of float landing gear.

b. Insert one tube (15) into inboard boots and straps on top of float.

c. Insert one tube (15) into outboard boots and straps on top of float.

d. Attach one tube (16) to center straps on top of float (figure 3-17).

NOTE

Install block (19) with sealant (C129) between both block and support tube and block and crosstube.

e. Insert pins on three blocks (19) into forward holes in support tubes (15 and 16) as shown in figure 3-17, view B-B.

f. Place six U-bolts (20) around support tubes (15 and 16), two in each block.

g. Place forward crosstube (6) on blocks (19). Pins in blocks must engage holes in crosstube. (Figure 3-17, view B-B.)

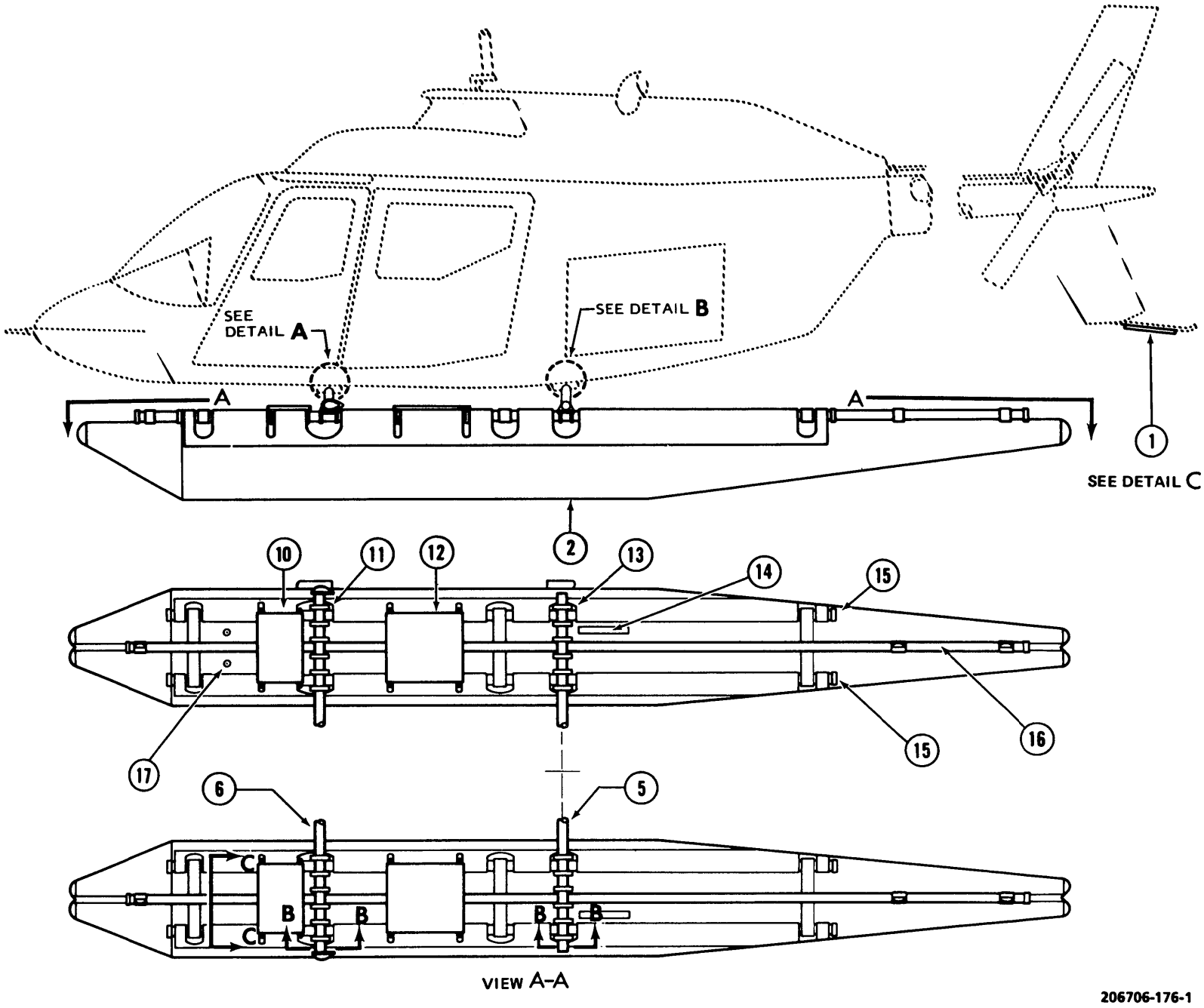

Figure 3-17. Float Landing Gear (Sheet 1 of 3)

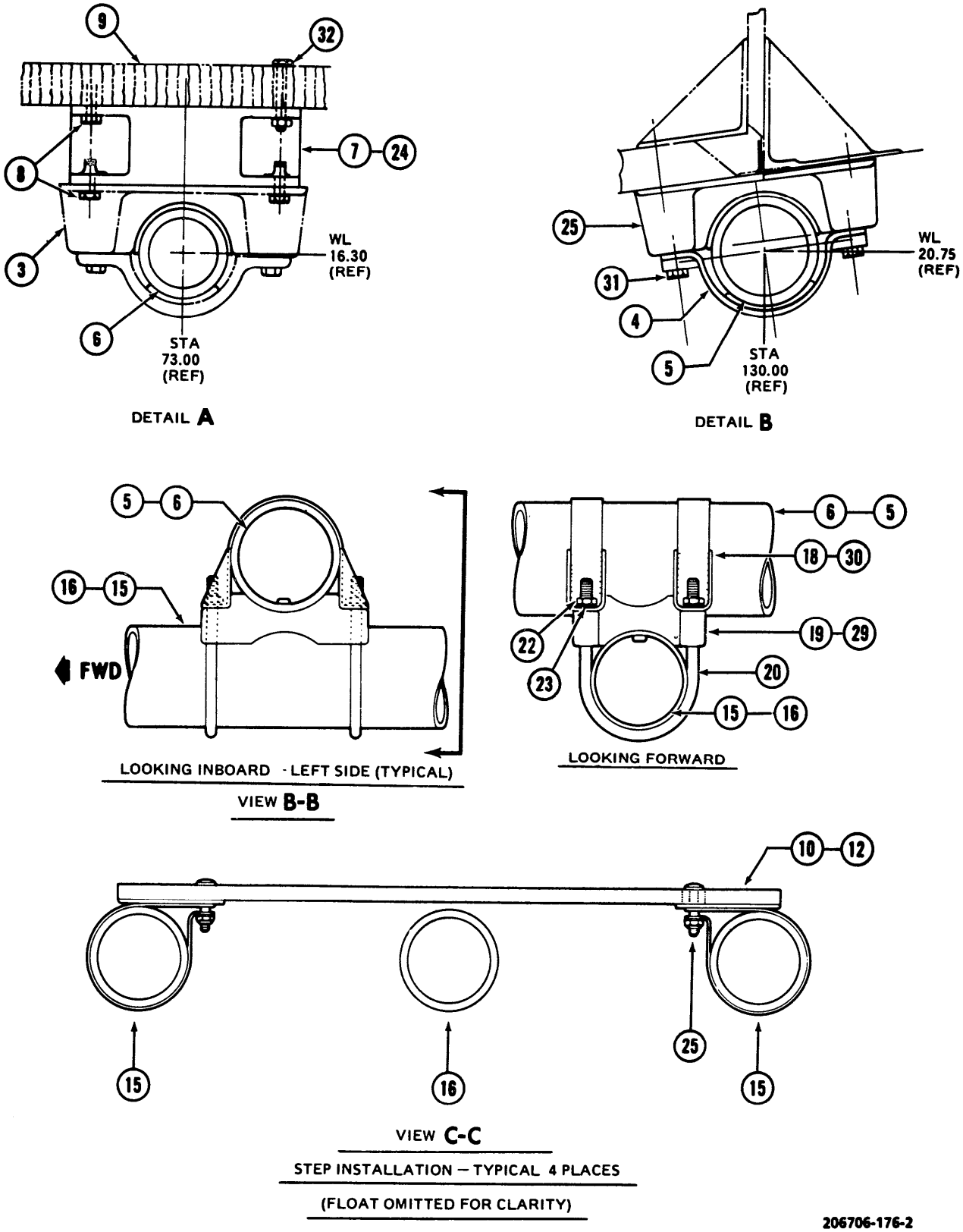

Figure 3-17. Float Landing Gear (Sheet 2 of 3)

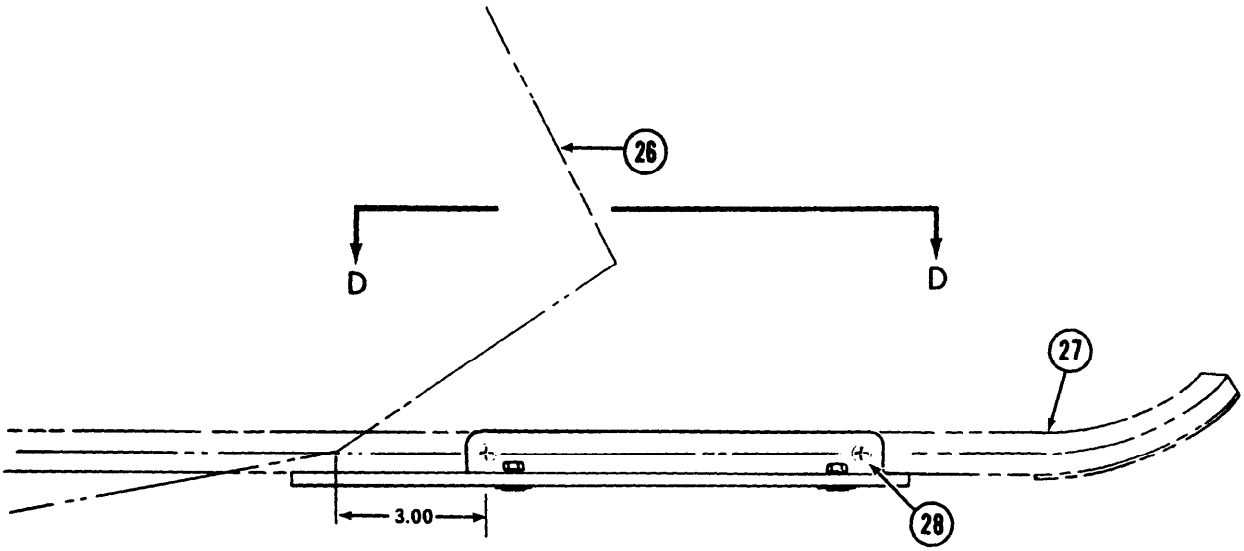

LOOKING INBOARD – LEFT SIDE
DETAIL C

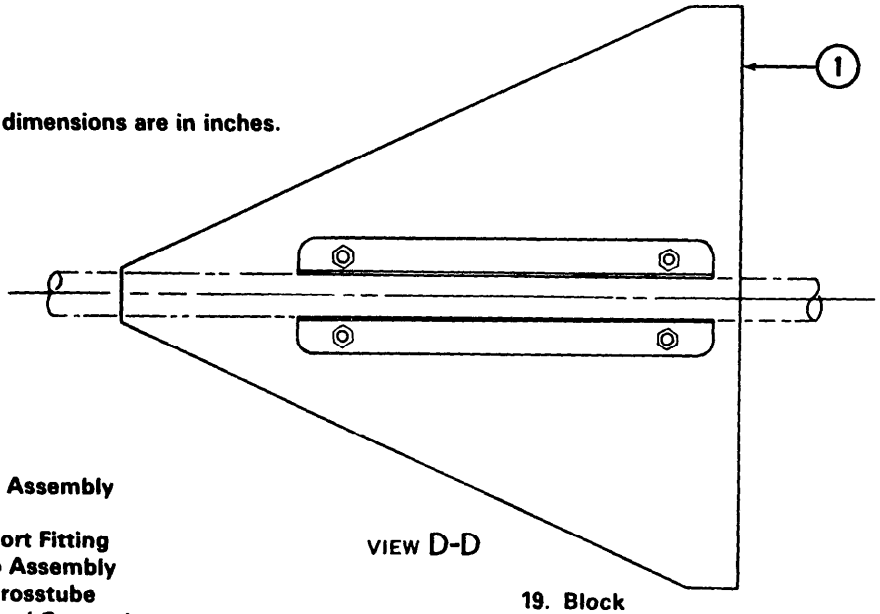

NOTE: All dimensions are in inches.

VIEW D-D

1. Plate Assembly
2. Float
3. Support Fitting
4. Strap Assembly
5. Aft Crosstube
6. Forward Crosstube
7. Spacer
8. Bolt, Washer
9. Fuselage
10. Forward Step
11. Forward Crosstube Slot
12. Aft Step
13. Aft Crosstube Slot
14. Stencil
15. Tube
16. Center Tube
17. Filler Valve and Cover
18. Strap Assembly
19. Block
20. U-Bolt
21. Clamp, Screw, Washer and Nut
22. Nut
23. Washer
24. Spacer
25. Support Fitting
26. Tail Boom Fin
27. Tail Skid
28. Screw, Washer and Nut
29. Block
30. Strap Assembly
31. Bolt, Washer
32. Bolt, Washer, Nut

206706-176-3

Figure 3-17. Float Landing Gear (Sheet 3 of 3)

h. Attach support tubes (15 and 16) to crosstube (6) as follows:

(1) Place six strap assemblies (18) over crosstube (6), two on each block to engage U-bolts (20).

(2) Install 12 washers (23) and 12 nuts (22).

NOTE

Tighten nuts (22) only enough to engage pins on blocks in holes in support tubes and crosstube. Final tightening will be accomplished when both crosstubes have been positioned on floats.

NOTE

Install block (29) with sealant (C129) between both block and support tube and block and crosstube.

i. Insert pins on three blocks (29) into aft holes in support tubes (15 and 16) as shown in figure 3-17, view B-B.

j. Place six U-bolts (20) around support tubes (15 and 16), two in each block.

k. Place aft crosstube (5) on blocks (29). Pins in blocks must engage holes in crosstube (figure 3-17, view B-B).

l. Attach support tubes (15 and 16) to crosstube (5) as follows:

(1) Place six strap assemblies (30) over crosstube (5), two on each block to engage U-bolts (20).

(2) Install 12 washers (23) and 12 nuts (22).

(3) Torque all nuts (22) **15 TO 20 INCH-POUNDS** plus tare torque.

m. Install forward step (10) as follows:

(1) Slip two clamps (21) over each support tube (15) at slots on float just forward of crosstube (6).

(2) Attach clamps (21) to forward step (10) with four screws, washers, and nuts.

n. Install aft step (12) as follows:

(1) Slip two clamps (21) over each support tube (15) at slots on float between crosstube (6) and crosstube (5).

(2) Attach clamps (21) to aft step (12) with four screws, washers, and nuts.

o. Inflate float as follows:

(1) Unfasten flaps over float filler valves (17, figure 3-17). Thread fittings of float inflation tool (T10) onto float valves and tighten. Loosen knurled nuts on compartment valves.

(2) Open valve slightly in pressure line and inflate floats slowly to **1-1/2** psi then shut off pressure valve. Do not inflate quickly and do not over inflate.

(3) Tighten knurled nuts on compartment valves, disconnect pressure and filler lines. Fasten flaps over compartment valves.

3-82. INSTALLATION — FLOAT LANDING GEAR.

a. Accomplish the following for initial installation.

(1) Remove skid type landing gear.

(2) Retain forward crosstube strap assemblies and hardware for installation on float landing gear.

(3) Remove two existing aft crosstube support fittings. Retain hardware for installation on float landing gear.

NOTE

Identify and save aft crosstube support fittings for reinstallation of skid type landing gear.

(4) Install two aft crosstube support fittings (25, figure 3-17) with existing hardware.

(5) Temporarily remove two existing forward crosstube support fittings (3) from fuselage.

(6) Install spacer (7) at fuselage right side support fitting location with two washers and two bolts (8) and existing aft two washers, bolts, and nuts

(32). The position of the two existing bolts must be reversed so that heads of bolts are in cabin interior.

(7) Reinstall two existing support fittings (3) on spacers (7 and 24) with eight washers and eight bolts (8).

b. Position float landing gear under helicopter.

c. Carefully lower helicopter to seat support fittings (3 and 25) on the bearing straps on crosstubes (5 and 6).

d. Attach aft crosstube (5) to support fittings (25) with two straps (4), four washers, and four bolts (31).

e. Attach forward crosstube (6) to support fittings (3) with existing straps and hardware.

f. Remove protective cap from electrical connector on bottom of fuselage and install on dummy connector.

g. Connect electrical connector on forward crosstube to electrical connector on bottom of fuselage.

NOTE

Pressure test floats daily when in use to ensure 1-1/2 psi inflation is maintained.

h. Install plate assembly (1) on tail skid (27) with two screws, four washers, and two nuts (28).

NOTE

Mounting holes are to be drilled in the tail skid as shown in figure 3-17, for initial installation of plate assembly (1).

i. Apply a bead of sealant (C129) to the mounting edges of each support fitting after installation.

SECTION IV. BRAKES

(Not applicable)

SECTION V. SKIS

(Data not available)

CHAPTER 4
POWER PLANT

4-1. GENERAL.

This chapter provides maintenance instructions for power plant related systems. This includes air induction, exhaust, cooling, oil, accessories, troubleshooting, power controls, rigging of the engine controls, engine replacement and build-up. It does not contain maintenance instructions for the engine itself. Maintenance instructions are contained in TM 55-2840-241-23.

Deleted

SECTION I POWER PLANT

4-2. POWER PLANT.

4-3. Deleted

NOTE

When removing the inlet fairings, the addition of one washer is required under the upper forward fastener of the left and right fairing to attain adequate locking tension. Other hardware must be reinstalled in nut plates with additional washers to prevent bottoming in threads.

4-4. DESCRIPTION — POWER PLANT. The OH-58A/C helicopters are equipped with an Allison T63-A-720 gas turbine engine rated at 420 horsepower (figure 4-1 as modified by figure 4-2). The engine is derated to 317 (five minute limit) and 270 (continuous) horsepower incurring compatibility with the main rotor transmission. The engine is an improved version of the basic engine. The engine incorporates a new bellmouth, new external hoses and tube assemblies, and new cowl side panels. The upper cowl, anti-icing control, firewall, electrical wiring installation, engine pan have been modified. The engine oil cooler is unchanged, the oil tank contains a different top plate and fittings, oil cooler blower and duct have been replaced, and supporting structure modified.

4-5. CLEANING — POWER PLANT.

CAUTION

Any water, other than minute quantities, must be removed from the plenum chamber if known freezing conditions exist or are expected. Helicopters equipped with an engine cleaning kit must be inspected through the plexiglass windows on each side of the cowling. Look at bottom of chamber and guide vanes. Occasionally it will be necessary to remove the cowling to clear the plenum.

Helicopters serial number 71-20340 and subsequent have engine cleaning provision incorporated in the

particle separator. This consists of a bellmouth spray fitting (5, figure 4-4), tube assembly (2), and attaching hardware. The cleaning solution input fitting (3) is easily accessible through the induction fairing left side access door (6, figure 2-2). A cap (4, figure 4-4) is installed on the input fitting (3) and must be reinstalled after each cleaning operation. This installation permits cleaning solution to be force fed from outside the helicopter, through the bellmouth spray fitting (5) into the engine bellmouth, without having to remove the induction fairing. Refer to TM 55-2840-241-23 for engine cleaning procedure.

4-6. OPERATIONAL CHECKS — POWER PLANT. Operational check of the power plant is performed as outlined in TM 55-2840-241-23 after power plant is installed on the helicopter. Refer to TM 55-1520-228-10 and TM 55-1500-328-25 for applicable maintenance operational checks.

4-7. BUILDUP — POWER PLANT.

4-8. INSPECTION — BUILDUP — POWER PLANT.

a. Inspect hose assemblies and replace if any of the following conditions exist: plies have separated, excessive cold flow, chafing, or if hose is hard and inflexible. Make sure hoses and lines are properly supported and clamps are secure. Discard and replace packings and gaskets at all points of installation requiring packings and gaskets.

b. If engine replacement is caused by an accessory gearbox or bearing failure, etc., and metal contamination of the engine lubrication system is suspected, the following shall be accomplished:

NOTE

Do not confuse AOAP laboratory high wear concentration of iron, magnesium, etc., (measured in parts per million) as being metal chip contamination or metal particle contamination.

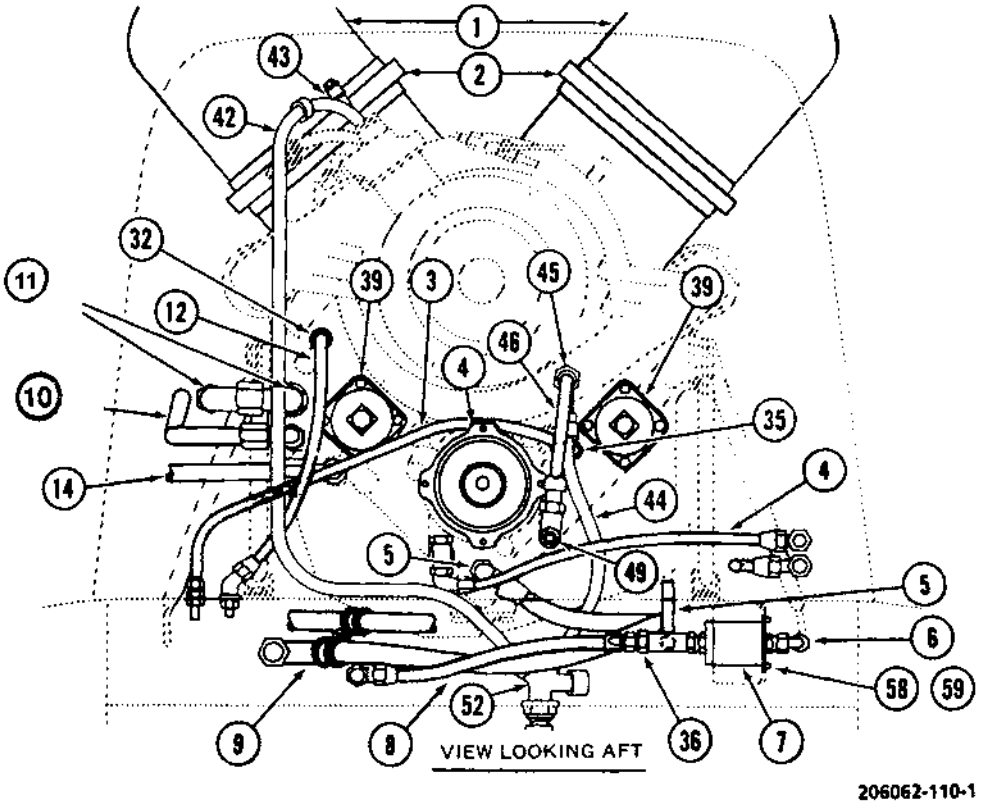

Figure 4-1. Engine Installation (Sheet 1 of 5)

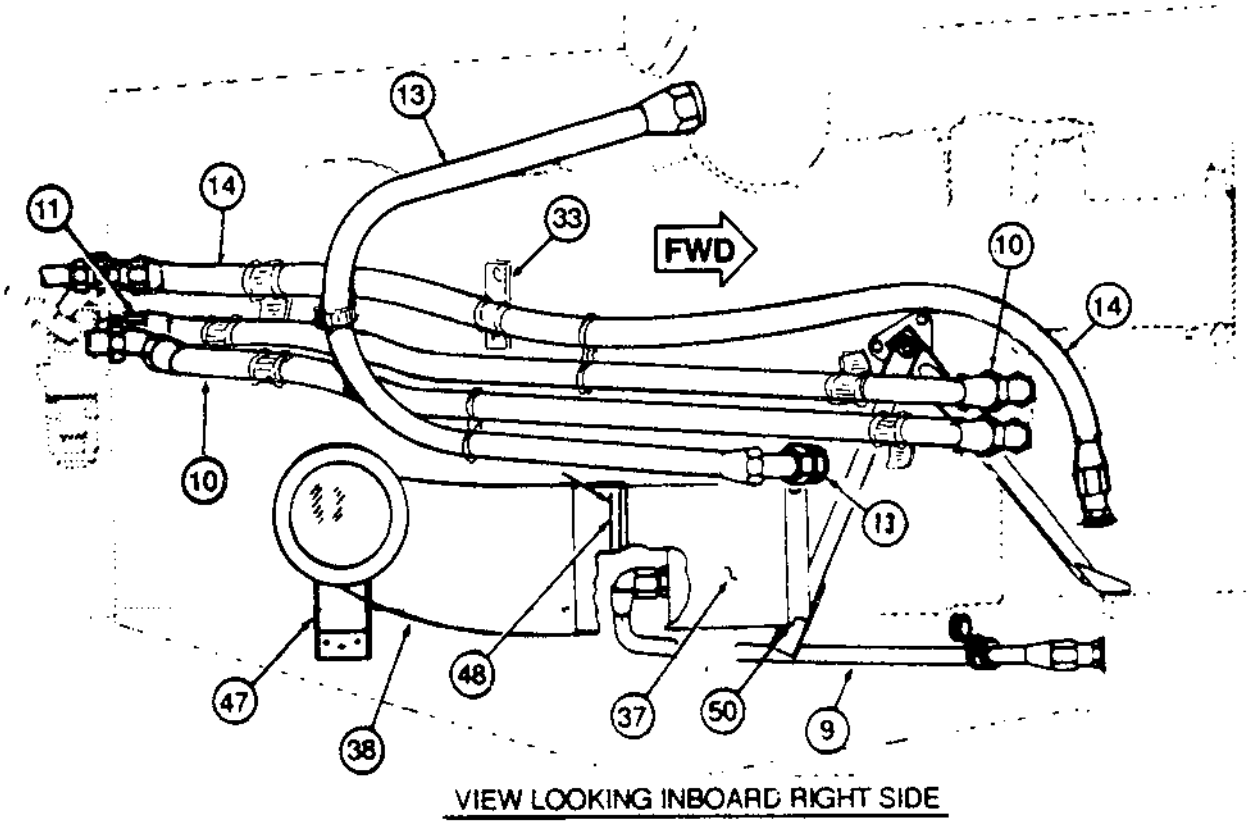

Figure 4-1. Engine Installation (Sheet 2 of 5)

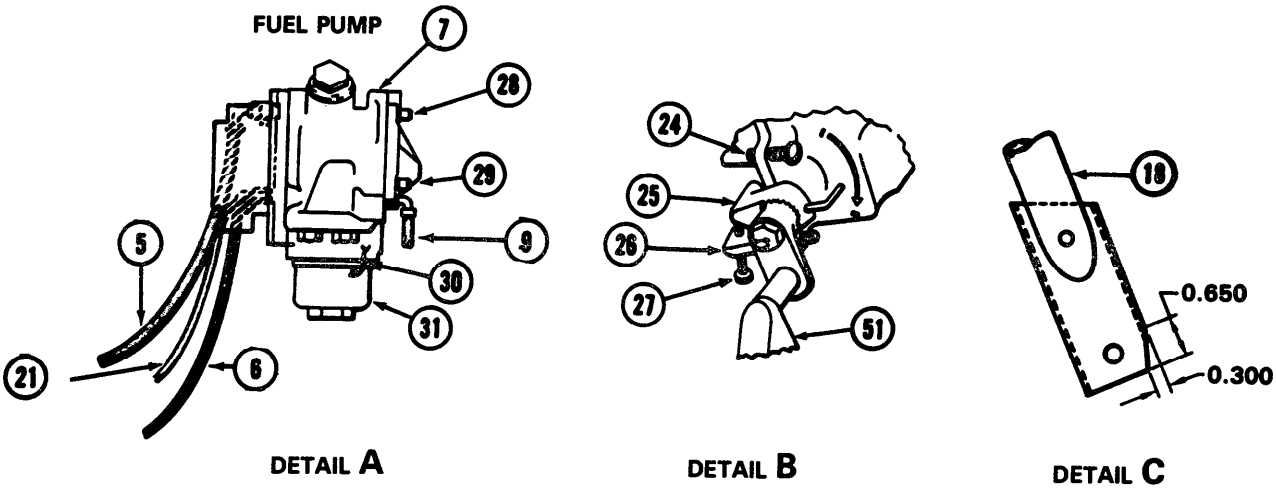

NOTE: All dimensions are in inches.

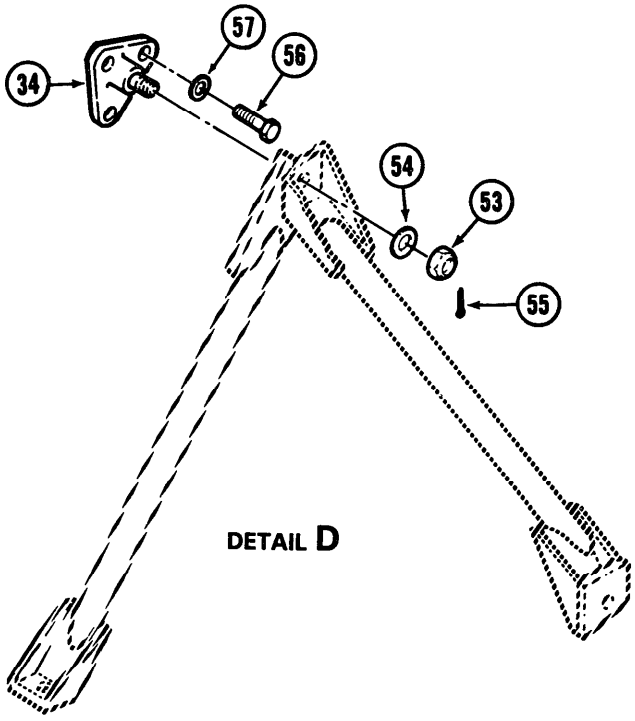

206062-110-3

Figure 4-1. Engine Installation (Sheet 3 of 5)

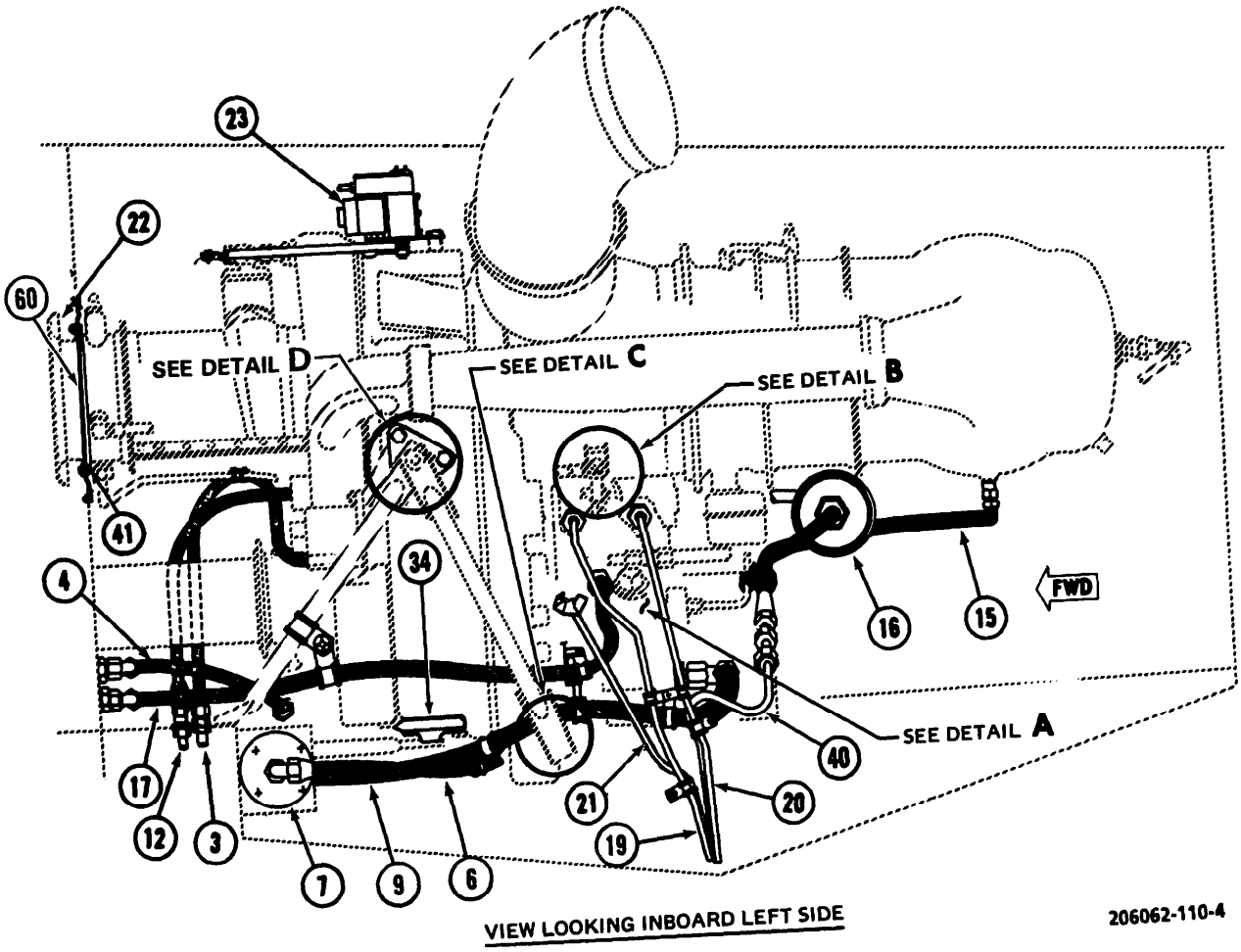

Figure 4-1. Engine Installation (Sheet 4 of 5)

1. Exhaust Stack
2. Exhaust Clamp
3. Engine Torque Pressure Hose
4. Freewheeling Assembly and Freewheeling Oil Return Hose
5. After Filter Sense Hose, Union and Packing
6. Before Filter Sense Hose, Reducer and Packing
7. Fuel Filter Bypass Warning Switch (ref) and Fuel Pump (ref)
8. Fuel Purge Line
9. Engine Fuel Inlet Hose, Fitting and Packing
10. Engine Oil Outlet Hose, Fitting and Packing
11. Engine Oil Inlet Hose, Fitting and Packing
12. Engine Oil Pressure Hose
13. Accessory Drive Vent Hose, Fitting and Packing
14. Oil Tank Vent Hose, Fitting and Packing
16. Combustion Chamber Drain Hose
17. Freewheeling Oil Supply Hose
18. Aft Engine Mount Leg
19. Exhaust Collector Drain Tube
20. Heat Shield Drain Tube
21. Fuel Pump Seal Drain Tube Union and Packing
22. Bellmouth
23. Anti-Icing Control Actuator
24. Stop Screw
25. Governor Shaft Stop Arm
26. Bolt
27. Screw
28. Control Bypass Return Port
29. Pump Discharge Port
30. Lockwire
31. Fuel Filter Bowl
32. Restrictor and Packing
33. Clip
34. Fitting, Engine Mount
35. Restrictor Assembly and Packing
36. Restrictor
37. Starter-Generator
38. Cooling Duct
39. Tachometer - Generators
40. Combustion Chamber Drain Tube
41. Screw and Washer (5 each)
42. Bleed Air Line
43. Fitting and Gasket
44. Bleed Air Line
45. Fitting and Gasket
46. Bleed Air Line
47. Clamp
48. Clamp
49. Fitting at Firewall
50. Mounting Pad - Starter/Generator
51. Governor Control Arm
52. Bleed Air Fitting
53. Nut
54. Washer
55. Cotter Pin
56. Bolt
57. Washer
58. Washer
59. Nut
60. Seal

Figure 4-1. Engine Installation (Sheet 5 of 5)

(1) Replace oil cooler.

(2) Remove and clean engine oil reservoir.

(3) Remove and clean or replace oil lines.

4-9. BUILDUP — ENGINE ASSEMBLY.

NOTE

Standard torque values for final tightening, as indicated in TM 55-2840-241-23, paragraph 5-4.1 and TM 1-1500-204-23-2, Chapter 4 shall be used if special torque is not specified.

a. Install fuel control level on fuel control shaft.

b. Install accumulator (16, figure 4-1) A .

c. Install governor control arm (51), bolt (26), and screw (27) on governor.

NOTE

Some governors recently overhauled may require the removal of bolt (26) and screw (27) to obtain 0.010 minimum clearance as specified in paragraph 4-105; step g.

d. Install starter-generator mounting pad (50) on engine case with new gasket.

e. Coat tachometer generators (39) drive splines with grease (C77) and install with new gaskets on front of engine.

f. Replace single lip seal with double lip seal. For replacement instructions, refer to paragraph 4-98.

g. Install freewheeling assembly (4). Refer to paragraph 6-33.

NOTE

Remove caps or plugs from openings prior to installing the following items.

h. Install drain tubes (19, 20, 21, and 40) and drain hose (15) to existing fittings on engine.

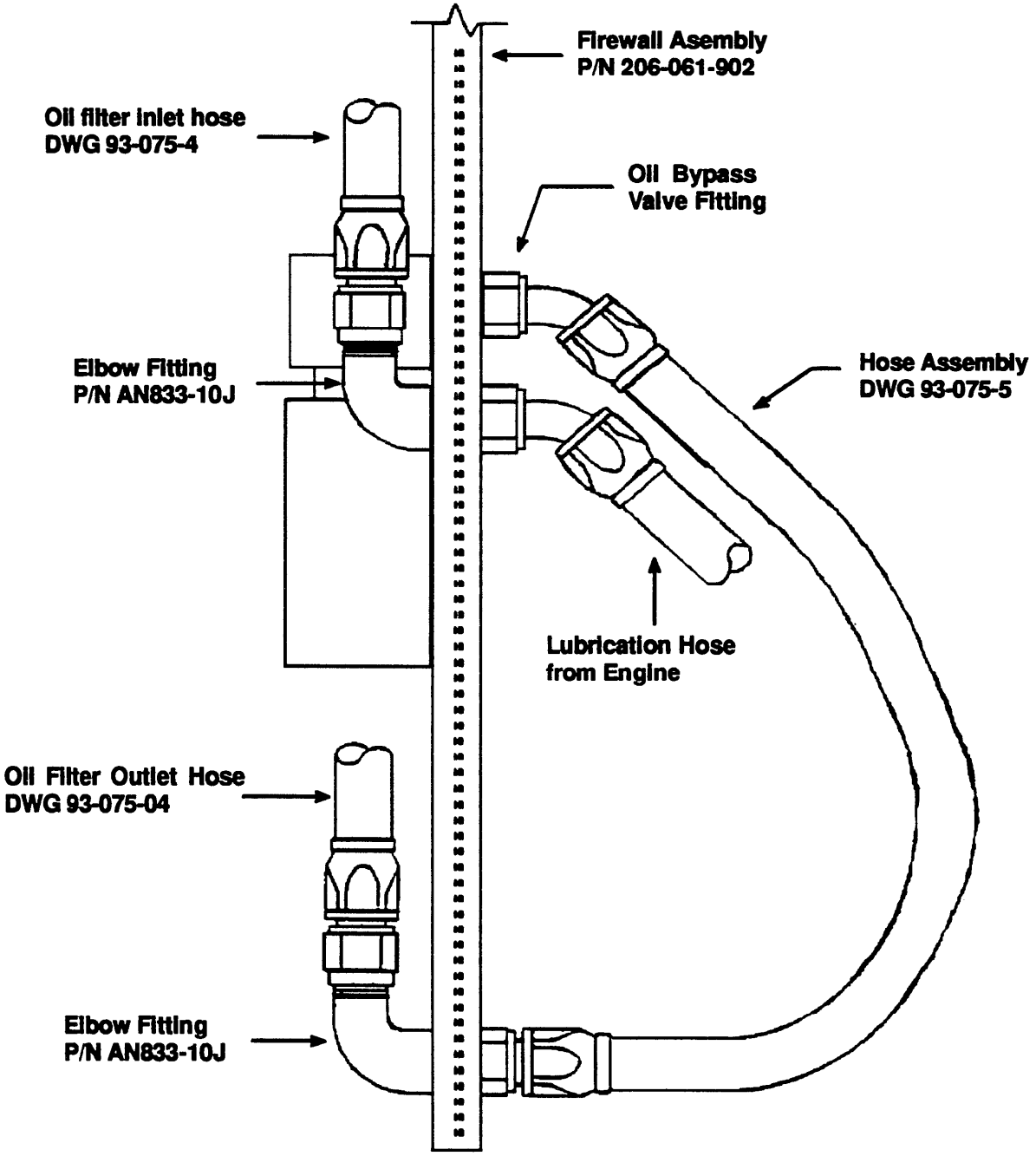

View looking inboard from right side of aircraft.

Figure 4-1.1. Engine Installation oil lines after MWO 1-1520-228-50-44

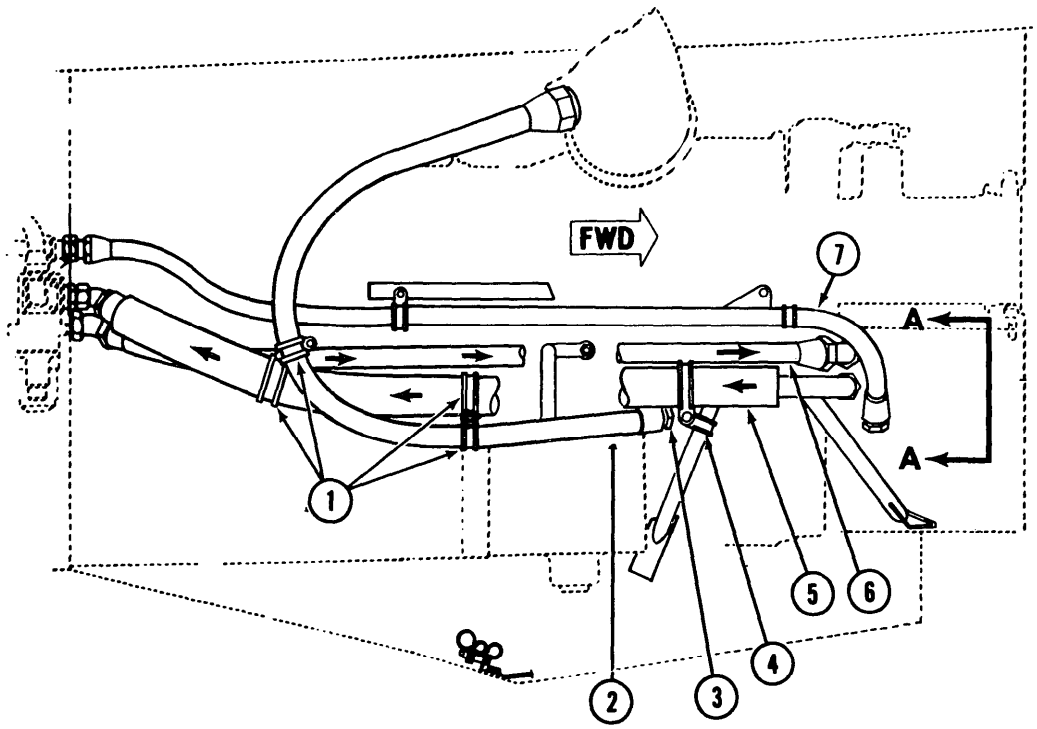

VIEW LOOKING INBOARD RIGHT SIDE

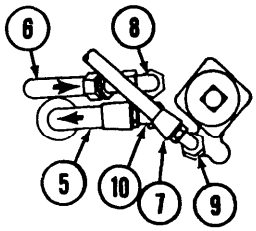

VIEW A-A

1. Clamps
2. Accessory Drive Vent Hose
3. Union and Packing
4. Clamps
5. Engine Oil Outlet Hose
6. Engine Oil Inlet Hose
7. Oil Tank Vent Hose
8. Elbow, Nut, and Packing
9. Union and Packing
10. Reducer and Packing

206062-111

Figure 4-2. Engine Installation — T63-A-720 C

CAUTION

Do not tighten fittings and gaskets (43 and 45) until bleed air lines (42 and 44) are lined up and tightened during engine installation. Use wrench on hex boss of fitting (43) (or hold boss in soft-jaw vise if fitting is old-style round boss configuration) to prevent application of torque to fitting weld joint during assembly. Refer to figure 4-3.

i. Lubricate new packings with engine lubricating oil and install on fittings, plug, tube adapter, and tube nipple. Install plug-in boss of fitting (43) only to the point that metal-to-metal contact is made between plug hex face and boss. Install tube adapter and tube nipple on fitting (43) in same manner. Install fittings, jamnuts, and gaskets (43 and 45) on engine but do not tighten jamnuts at this time. Refer to figure 4-3 and TM 55-2840-241-23.

j. Install freewheeling oil supply hose (17, figure 4-1) to existing fitting on freewheeling assembly and secure hose to spare engine pad with clamp.

k. Install packing and fitting (13) on engine. Install hose to fitting (13). **A**

l. Install union and packing (3, figure 4-2) on engine accessory case. Install accessory drive vent hose (2) to union. **C**

m. Install packing and restrictor (32, figure 4-1) on engine. Install hose (12) to restrictor (32).

n. Install packings and fittings (14, 11, and 10) on engine.

(1) Torque fitting (14) to engine, **55 TO 80 INCH-POUNDS.**

(2) Torque fittings (10 and 11) to engine, **75 TO 110 INCH-POUNDS.**

o. Install hoses on fittings (14, 11, and 10).

(1) Torque hose to fitting (14), **80 TO 120 INCH-POUNDS.**

(2) Torque hoses to fittings (10 and 11), **150 TO 200 INCH-POUNDS.**

p. Install elbow, nut, and packing (8, figure 4-2), union and packing (9), and reducer and packing (10) to engine. **C**

q. Install hoses (5, 6, and 7) to elbow (8), union (9), and reducer (10). Route hoses along right side of engine and secure with clamps, screws, washers, and nuts (1 and 4). **C**

r. Install packing and union (21, figure 4-1), packing and fitting (9) on fuel pump. Install packing and reducer (6) in the before filter port, packing and union (5) in the after filter port. Install hoses (5, 6, and 9) and tube (21) to fuel pump fittings.

s. Install packing and restrictor assembly (35) on engine. Install hose (3) to restrictor assembly (35).

t. Install auto relight components from removed engine on replacement engine as follows:

CAUTION

Ensure that the exciter assembly is the correct type for engine.

(1) If replacement engine does not have gearbox cover assembly modified around studs used to mount the tube assembly and the control mount bracket, perform the following steps. If cover has been modified proceed with step t.(2).

(a) Locate second and fourth studs to left of gearbox magnetic plug, when viewed from rear. Leave nut and washer on to protect stud threads.

CAUTION

Use extreme care to prevent damage to studs.

NOTE

Remove clamp securing fuel and oil lines as necessary to facilitate installation.

(b) Using a hand held power grinder or file, remove outer lip of spot face until flush with washer to form a slot. This is necessary to provide a flat surface for installation of control box bracket.

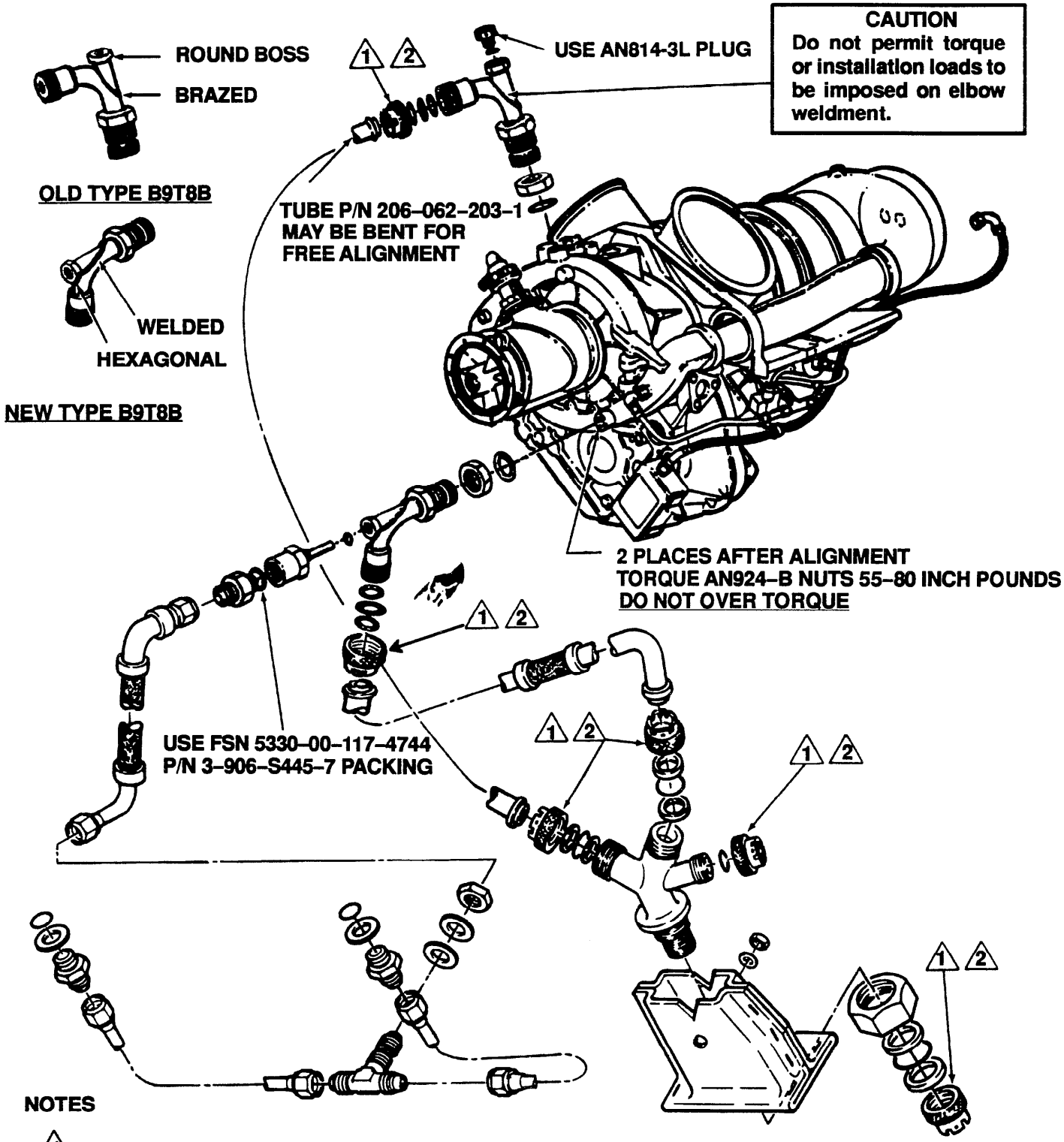

NOTES

1. Straight Adapter nut to be hand tightened only.
2. Lockwire using (C96).

Figure 4-3. Bleed Air Installation

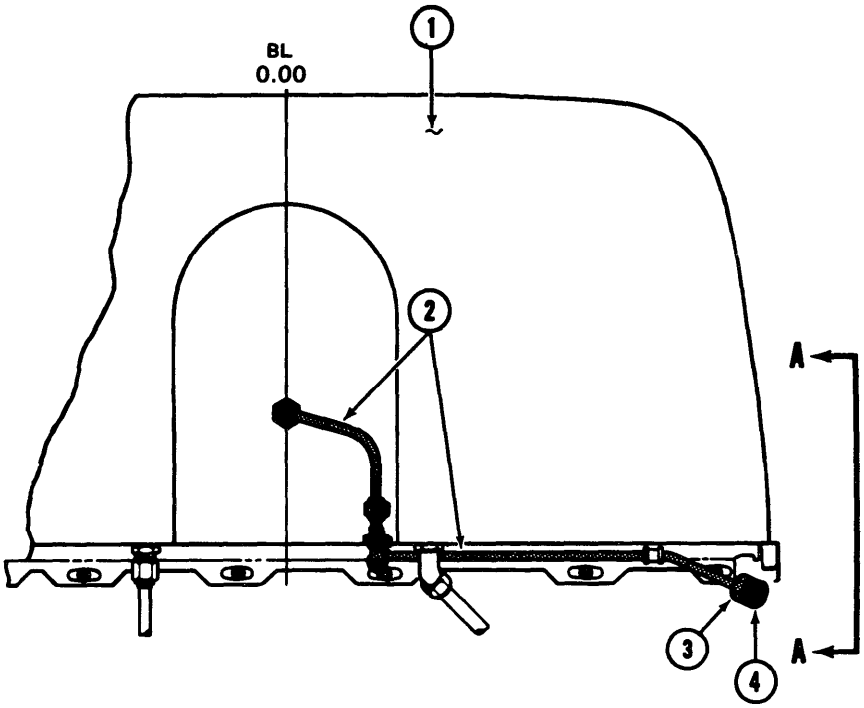

VIEW LOOKING AFT

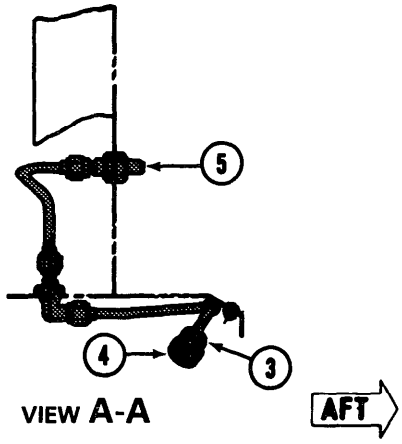

VIEW A-A

(LOOKING INBOARD FROM LEFT SIDE)

206062-113

1. Particle Separator
2. Tube Assembly
3. Input Fitting
4. Cap
5. Spray Fitting

Figure 4-4. Engine Cleaning Provision

(c) Touch up reworked areas with primer (C118).

(2) Remove two nuts from gearbox studs. Leave washers in place for bracket. Remove one nut from fuel pump mount pad.

(3) Install control assembly on gearbox, using two reworked stud locations and bottom fuel pump mount stud as bracket mount points. Install two gearbox nuts, and torque **35 TO 40 INCH-POUNDS.** Install fuel pump mount nut and torque **70 TO 85 INCH-POUNDS.**

(4) Install Pc Sense to autorelight control tube assembly **A**, hose assembly **C**. Do not obstruct drain hole (size 69 drill, plus or minus 3 sizes) predrilled in lower lateral section (as viewed when installed) of tube. It is necessary to remove outer edge of spot face to form a slot for three tube mounting brackets. Use outboard oil filter housing stud, the top split line stud adjacent to the end data plate and the third stud to the right of the magnetic sump plug. Using a hand-held grinder, file or sharp knife, remove outer edge below washer height, and touch up rework area with primer (C118). Install brackets on top of washers and tighten nuts. (Washer may be eliminated in the event stud length is inadequate.)

4-10. METAL TUBE ASSEMBLY.

Refer to TM 55-2840-241-23 for inspection and repair.

4-11. SECOND ACCUMULATOR.

4-12. DESCRIPTION — SECOND ACCUMULATOR. An accumulator and hose assembly are installed in the line between the power turbine governor pressure port and the double check valve.

4-13. INSPECTION — SECOND ACCUMULATOR.

a. Inspect accumulator for leaks and security.

b. Inspect hose assembly for fraying, weather checking, tears, general deterioration, and security.

4-14. REMOVAL — SECOND ACCUMULATOR.

Refer to TM 55-2840-241-23.

4-15. REPAIR/REPLACEMENT — SECOND ACCUMULATOR. Refer to TM 55-2840-241-23.

4-16. INSTALLATION — SECOND ACCUMULATOR. Refer to TM 55-2840-241-23.

4-17. ENGINE MOUNT FITTINGS.

4-18. DESCRIPTION — ENGINE MOUNT FITTINGS. The engine mount fittings (34, figure 4-1) are installed on the left, right, and lower engine mount pads.

4-19. INSPECTION — ENGINE MOUNT FITTINGS. Inspect engine mount fittings (34, figure 4-1) for cracks and evidence of corrosion. If crack in engine mount fitting is suspected, refer to TM 1-1520-254-23, Technical Manual Aviation Unit Maintenance (AVUM) and Aviation Intermediate Maintenance (AVIM) Manual Nondestructive Inspection Procedures for OH-58 Helicopter Series.

4-20. REMOVAL — ENGINE MOUNT FITTINGS. Refer to TM 55-2840-241-23.

CAUTION

Engine must be supported during removal of engine mount fittings from an installed engine.

NOTE

Deleted.

a. Remove anti-ice control actuator (23, figure 4-1). Refer to paragraph 4-52. Install lift tool (T40) on anti-ice control actuator engine pad. Connect hoist to lift tool. Apply enough tension to hold engine in place.

CAUTION

Exercise extreme care when removing engine mount legs from engine mount fittings to avoid damage to main driveshaft, tail rotor driveshaft, and engine mount legs.

b. Remove cotter pin (55), nut (53), and washer (54) which secures the engine mount to the engine mount fitting (34).

NOTE

Bolts attaching engine mount to airframe may need to be loosened to facilitate removal of engine mount from engine mount fitting.

c. Remove lockwire and the three bolts (56) and washers (57) which secure the engine mount fitting to the engine mount pad. Remove fitting.

4-21. REPAIR — ENGINE MOUNT FITTINGS.

a. Replace cracked mount fittings with like serviceable items.

b. Remove corrosion in accordance with instructions contained in TM 43-0105.

4-22. INSTALLATION — ENGINE MOUNT FITTINGS.

CAUTION

Inspect to assure the correct bolts (56, figure 4-1) are used to install the engine mount fitting. Do NOT use engine container shipping hardware.

a. Install engine mount fitting (34, figure 4-1) on engine mount pad and secure with three washers (57) and bolts (56). Torque bolts **100 TO 140 INCH-POUNDS** and lockwire (C96).

b. Attach engine mount to engine mount fitting (34, figure 4-1), and secure with washer (54) and nut (53). Torque nut **95 TO 110 INCH-POUNDS** and secure with cotter pin (55). Torque bolts attaching engine mount to airframe. Refer to paragraph 2-308.

c. Remove hoist and lift tool (T42) from engine.

d. Install anti-ice control actuator on engine. Refer to paragraph 4-53.

4-23. ENGINE ASSEMBLY.

4-24. DESCRIPTION — ENGINE ASSEMBLY. Refer to TM 55-2840-241-23. For build-up of the assembly, refer to paragraph 4-7 and to figure 4-1. For installation of electrical cable assemblies on engine assembly, refer to figure 4-5.

4-25. SERVICING — ENGINE ASSEMBLY. Procedures for engine oil system servicing are contained in paragraph 1-8.

4-26. ADJUSTMENT — ENGINE ASSEMBLY. Refer to TM 55-2840-241-23.

4-27. TROUBLESHOOTING — ENGINE ASSEMBLY. Refer to TM 55-2840-241-23.

4-28. MAINTENANCE PRECAUTIONS — ENGINE ASSEMBLY.

a. Use extreme caution to prevent dirt and foreign objects from entering the engine. Place temporary covers on all exposed openings. All open hoses and tubing shall be protected with plastic or metal caps. If suitable caps are not available, use commercial grade aluminum foil crimped to fit the particular opening.

WARNING

Lubricating oil may cause a skin rash if prolonged contact is allowed. Use solvent in well-ventilated area. Do not inhale vapors, or allow to come in contact with skin, eyes, or clothing. Observe proper fire prevention rules.

WARNING

Degreasing Solvent is combustible and toxic to eyes, skin, and respiratory tract. Wear protective gloves and goggles/face shield. Avoid repeated or prolonged contact. Use only in well-ventilated areas (or use approved respirator as determined by local safety/industrial hygiene personnel). Keep away from open flames or other sources of ignition.

CAUTION

Do not use tape to seal fuel or oil openings. Tape adhesive is soluble in fuel or oil and can cause contamination.

b. Apply lubricating oil (C101) as required to assist in removal of parts during disassembly. On parts to be installed, remove all traces of oil with degreasing solvent (C62).

c. Protect engine from dust and inclement weather. If practical, perform engine maintenance in closed areas.

WARNING

The ignition unit contains a very small amount of radioactive material (Cesium-Barium 137) and normally requires no handling precautions. However, severely damaged units that have been broken open must be handled with forceps or gloves, and disposed of in accordance with AR 755-15 and TB 55-1500-314-25.

d. Before removing engine components, disconnect the electrical cable assembly at the

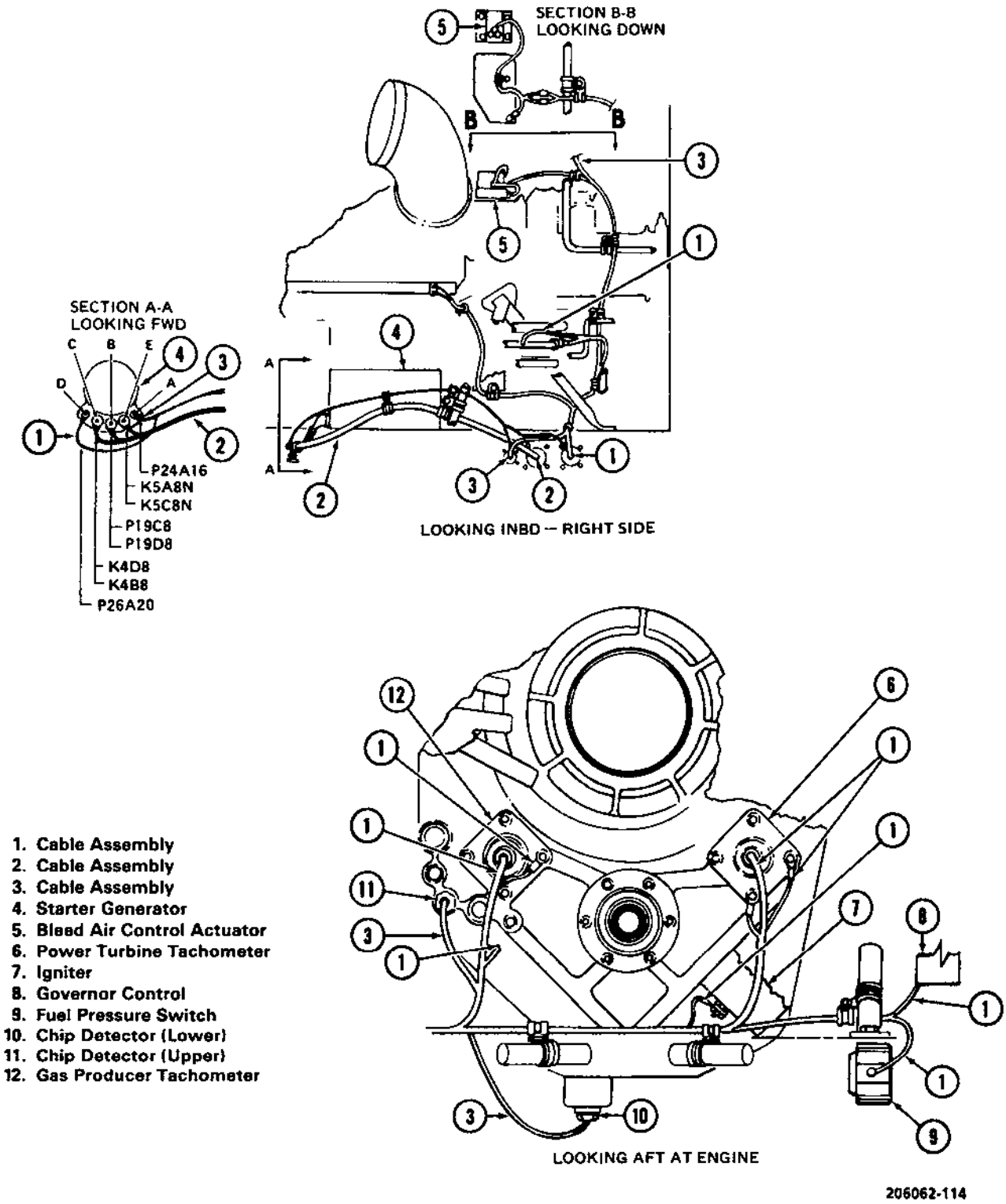

1. Cable Assembly
2. Cable Assembly
3. Cable Assembly
4. Starter Generator
5. Bleed Air Control Actuator
6. Power Turbine Tachometer
7. Igniter
8. Governor Control
9. Fuel Pressure Switch
10. Chip Detector (Lower)
11. Chip Detector (Upper)
12. Gas Producer Tachometer

Figure 4-5. Installation of Electrical Cable Assembly Engine

ignition unit and ground the ignition leads. Refer to figure 4-5.

e. Discard used lockwire, preformed packings, cotter pins, gaskets, tabwashers, lockpins, keywashers, and lockwashers.

CAUTION

Use care to prevent damage to lockwire holes.

f. When removing hoses and electrical lines, remove clamps from brackets. Generally, brackets are left on the engine unless otherwise stated.

g. When disconnecting electrical connectors or hose and tubing fittings, remove clamps on brackets as required to gain slack and avoid damage to connectors and fittings.

h. Remove hose assemblies that may be damaged during removal of engine components.

CAUTION

Do not use cadmium-plated tools for any of the disassembly or reassembly procedures given in this manual. Cadmium plating has a tendency to chip. If these chips enter the engine, they will contaminate the lubrication system and cause magnesium parts to deteriorate.

i. Avoid hanging objects (tools, lights, etc.) on hose assemblies.

j. Care shall be taken to route and clamp hose assemblies securely. Chafing shall be avoided at all times. Proper clamping and chafe pads shall be used at all times.

k. During removal, examine all parts for serviceability. Look for indications that work was incorrectly performed during previous repairs or overhauls. Report such indications in accordance with current practice.

l. Any bellmouth (22, figure 4-1) containing loose nutplates or (pop-type) rivets used for installing the nutplates should have the nutplates changed. Contact ATCOM Engineering for rework instructions for installing new nutplates for the OH58A and OH-58C. Ensure bellmouth gasket is not deteriorating, cracking or deformed. Replace gasket, if any of these conditions exist.

m. When removing or installing oil, fuel, and air hose assemblies, do not apply torque to the narrow hex nut of the sleeve and nipple. Torque must be applied only to the wide hex nut. When loosening or tightening the wide hex nut, secure the nipple or sleeve to prevent twisting of the hose assembly.

WARNING

Prolonged contact with lubricating oil may cause a skin rash. Those areas of skin and clothing that come in contact with lubricating oil should be thoroughly washed immediately. Saturated clothing should be removed immediately. Areas in which lubricating oil is used should be adequately ventilated to keep mist and fumes to a minimum.

CAUTION

Lubricating oil may soften paint upon contact. If lubricating oil is spilled on painted surfaces, these surfaces should be thoroughly washed.

To ensure total seating of preformed packings, remove identifying paint by carefully rubbing or scraping paint with finger or fingernail. No not use a sharp instrument which could damage the packing.

NOTE

Fittings being tightened to prescribed torque should have dry, clean threads.

n. Remove protective tape, caps, plugs, and covers as necessary for installation.

4-29. PREPARATION FOR REMOVAL — ENGINE ASSEMBLY.

CAUTION

Refer to TM 55-2840-241-23, and TB 55-9150-200-24 for preservation requirements.

a. Disconnect battery.

b. Drain oil.

c. Remove engine cowling and exhaust stacks.

d. Remove passive defense system (armor panels) from engine compartment forward firewall if installed.

e. Disconnect the engine to transmission drive shaft at the freewheeling unit only. Remove the tail rotor drive shaft from the number one and number two disc assemblies.

f. Remove the starter-generator cooling duct (38, figure 4-1) by disconnecting the clamps (47 and 48) at each end. Remove the starter-generator (37) at mounting pad (50).

NOTE

When electrical cables and plugs are disconnected from airframe plugs, cables and plugs should be secured to engine in a manner that will avoid interference when removing engine assembly.

If the starter-generator is not to be replaced, do not remove the electrical cables from it.

g. Remove the electrical plug at the gas producer tachometer (12, figure 4-5), ground wire from tachometer mounting stud, electrical plugs from two chip detectors (10 and 11), turbine outlet temperature (TOT) cables from the terminal block on the engine fireshield, and two clamps that secure the anticollision and anti-icing actuator cables to the engine.

NOTE

When removing fuel and oil hoses, lines and fittings, ensure residual fluids have been drained. Cap all open ports until reinstallation. All parts removed should be inspected for serviceability.

h. Disconnect the engine oil inlet hose (11, figure 4-1), outlet hose (10), and oil tank vent hose (14) from the aft firewall fitting and disconnect the hose clamps securing the hoses to the engine support legs. A

i. Disconnect engine oil inlet hose (6, figure 4-2), outlet hose (5) and oil tank vent hose (7) from aft firewall fittings. Disconnect clamps (4) securing hose to engine support leg. C

j. Disconnect the engine fuel inlet hose (9, figure 4-1) at the lower firewall and disconnect the clamps securing it to the lower support leg.

k. Disconnect the engine oil pressure hose (12) and torque pressure hose (3) from the lower firewall fittings.

l. Disconnect the large bleed air pressure line (42) from the fitting (43) on upper right section of the diffuser. Disconnect the heater bleed air line (44) from the fitting (45), lower left side of the diffuser. Discard packings.

m. Disconnect the gas producer control tube from the fuel control lever.

n. Remove the screws and washers (41), inboard row only, attaching the bellmouth (22) to the engine adapter flange.

o. Disconnect the freewheeling unit hoses (4 and 17) and clamp from the fittings on the forward firewall and cap fittings immediately.

NOTE

If fittings are not capped the main transmission will drain.

p. Disconnect the two fuel differential pressure hoses (5 and 6) from the fuel filter bypass warning switch (7) fittings.

q. Disconnect the linear actuator from the governor control lever.

r. Disconnect the particle separator bleed air line (46) at the firewall fitting (49). Discard packing.

s. Remove electrical plug at the power turbine tachometer (6, figure 4-5), two ground wires on the tachometer studs, and the terminal at the igniter (7) input stud.

t. Remove the anti-icing control tube from the engine anti-icing valve.

u. Remove the clamps and ground wire (figure 4-5, section B-B), anti-icing control actuator (23, figure 4-1) and control tube from the pad on top of the engine, store on the lower firewall, electrical cable disconnect is not required.

4-30. REMOVAL — ENGINE ASSEMBLY.

Premaintenance Requirements for Removal of Engine Assembly

Condition	Requirements
Model	OH-58A/C
Part No. or Serial No.	All
Special Tools	(T40)
Test Equipment	None
Support Equipment	(S12)
Minimum Personnel Required	Three
Consumable Materials	None
Special Environmental Conditions	None

a. Install the engine lifting tool (T40) to the engine anti-icing control pad. Refer to TM 55-2840-241-23P.

b. Connect the overhead hoist and take up the slack.

CAUTION

Exercise extreme care when removing engine mount legs from engine mount fittings to avoid damage to main driveshaft, tail rotor driveshaft, and engine mount legs.

c. Remove engine mounts (1 and 2, figure 2-61) from engine mount fittings (34, figure 4-1).

d. Carefully lift the engine, being sure that all connections between engine and airframe are disconnected.

e. Remove engine mounting fittings (34) (3 each) and replace with engine stand fittings.

f. Position engine in turnover stand per TM 55-2840-241-23. Remove engine hoist.

g. If required, prepare engine for return to overhaul facility as follows:

(1) Remove hose (3, figure 4-1) from restrictor (35) on engine. Remove restrictor and packing (35).

(2) Remove hoses (5, 6, and 9) and tube (21) from fuel pump (7). Remove union and packing (5), reducer and packing (6), fitting and packing (9), union and packing (21) from fuel pump.

(3) Remove hoses (10, 11, and 14) from fittings on engine. **A**

(4) Remove fittings and packings (10, 11, and 14) from engine. **A**

(5) Remove hoses (5, 6, and 7, figure 4-2) from elbow (8), union (9), and reducer (10) on engine. **C**

(6) Remove elbow (8), union (9), and reducer (10) from engine. Discard packings. **C**

(7) Remove engine oil pressure hose (12, figure 4-1) from restrictor (32). Remove restrictor (32) and packing from engine.

(8) Remove hose (13) from fitting. Remove fitting and packing from engine. **A**

(9) Remove hose (2, figure 4-2) from union (3) on engine. **C**

(10) Remove union (13) from engine. Discard packings. C

(11) Remove hose (17, figure 4-1) from existing fitting on freewheeling assembly and clamp from spare engine pad.

CAUTION

Use wrench on hex boss fitting (43) (or hold boss in soft-jaw vise if fitting is old-style round boss configuration) to prevent application of torque to fitting weld joint during disassembly. Refer to figure 4-3.

(12) Remove fitting, jamnut and gasket (43, figure 4-1), and fitting, jamnut, and gasket (45) from engine. Remove plug from fitting (43) and tube adapter and tube nipple from fitting (45). Discard packings.

(13) Disconnect drain tubes (19, 20, 21, and 40) and drain hose (15) from existing fittings on engine

NOTE

Cap or plug all openings.

(14) Remove freewheeling assembly (4).

(15) Remove tachometer generators (39) from front of engine.

(16) Remove starter-generator mounting pad (50) from engine.

(17) Remove screw (27), bolt (26), and governor control arm (51) and retain for installation on the replacement engine.

(18) Remove fuel control lever from fuel control shaft.

(19) Remove autorelight components for reinstallation on replacement engine as follows:

(a) Remove tee assembly from engine being removed and elbow fitting from replacement engine. Install tee fitting in replacement engine and torque jamnut to **55 TO 80 INCH-POUNDS.** Install elbow in removed engine.

(b) Remove tube assembly and attaching clamps. Reinstall nuts on studs.

(c) Remove autorelight control assembly, bracket assembly, and bracket. Reinstall nuts on engine studs.

4-31. INSPECTION - ENGINE ASSEMBLY.

a. Inspect external hoses, tubing, and electrical cables on engine assembly for damage and serviceability before engine assembly is reinstalled in helicopter airframe.

b. If engine assembly is to be reinstalled, inspect engine assembly in accordance with TM 55-2840-241-23.

4-32. REPAIR/REPLACEMENT - ENGINE. Refer to TM 55-2840-241-23 for repair of engine and engine furnished components.

4-33. INSTALLATION - ENGINE ASSEMBLY.

CAUTION

Prior to installation of engine, ensure that two accumulators and one double check valve are installed on engine to prevent damage to mast and transmission.

NOTE

Torque values for lines and fitting are specified in TM 55-2840-241-23 and TM 1-1500-204-23.

a. Install the engine lifting tool (T40) to the engine anti-icing control pad.

b. Connect the overhead hoist and take up slack.

c. Lift engine out of the engine stand.

d. Remove three engine stand fittings and install three engine mount fittings (34, figure 4-1) using bolts (56) and washer (57) (washer under bolthead). Torque bolts **100 TO 140 INCH-POUNDS** and lockwire (C96).

e. Hoist engine over airframe and lower carefully into position.

CAUTION

Exercise extreme care when installing engine to engine mount legs to avoid damage to main driveshaft, tail rotor driveshaft, and engine mount legs.

f. Attach engine mounts (1 and 2, figure 2-61) to left, right, and lower engine mount fittings (34, figure 4-1). Install washers (54) and nuts (53). Torque retention nuts **95 TO 110 INCH-POUNDS** and secure with cotter pin (55).

g. Torque bolts attaching engine mounts to airframe. Refer to paragraph 2-308.

h. Remove hoist from engine lift tool and remove tool from engine.

i. Install anti-icing control actuator (23) and control tube on top engine pad. Install clamps and ground (figure 4-5, section B-B).

j. Install anti-icing control tube to engine anti-icing valve. **A**

k. Install anti-icing control tube to engine anti-icing valve, rotating valve lever 90 degrees clockwise. Torque valve coupling nut **65 to 75 INCH-POUNDS.** **C**

l. Install electrical terminal on the igniter exciter (7) input stud, electrical plug on power turbine tachometer (6), and two ground wires on tachometer.

CAUTION

Hold the tube nipple with wrench when connecting line (46, figure 4-1) to fitting (45) to prevent installation torque from damaging fitting. Refer to figure 4-3.

m. Connect rigid end of line (46, figure 4-1) to the firewall fitting (49) and to the tube nipple installed with the tube adapter on fitting (45). Torque to **180 TO 200 INCH-POUNDS.** Position fitting (45) in engine for best alignment of lines (44 and 46), hold in place and tighten jamnut on fitting (45) **55 TO 80 INCH-POUNDS.** Install knurled nut and new packing lubricated with engine oil (C103), between the two expandable washers on the aft side of the beaded end of the bleed air line (44). Tighten knurled nut maximum hand tight and lockwire (C96) in position.

n. Connect governor control lever to linear actuator.

NOTE

Refer to TM 1-1500-204-23 for installation of hoses and tubing.

o. Connect fuel filter sense hoses (5 and 6) to fuel filter bypass warning switch (7) fittings.

p. Remove caps from freewheeling unit fittings and install hoses (4 and 17) to fittings. Install clamp to fittings on firewall.

q. Align bellmouth (22) and seal (60) with engine adapter flange. Install screws and washers (41).

r. Connect fuel control lever to gas producer control tube.

s. Adjust position of fitting (43) per TM 55-2840-241-23. If necessary, line (42) should be bent to obtain proper free state alignment. Hold position of fitting and tighten jamnut **55 TO 80 INCH-POUNDS.** Install new packing, lubricated with engine oil, between the two expandable washers on the beaded end of the line (42). Connect line to fitting (43) and tighten knurled gland nut maximum handtight. Install lockwire (C97) between gland nut and plug.

t. Install new packing, lubricated with engine oil, between the two expandable washers on the lower end of bleed air lines (42 and 44). Connect lines to fitting (52) and tighten knurled gland nuts maximum hand tight (after upper ends of lines are properly positioned). Lockwire (C96) the two gland nuts together.

CAUTION

Engine oil pressure hose and engine torque pressure hose may be inadvertently crossed. Do not allow hoses to twist while applying torque. Refer to figure 4-1.

NOTE

When connecting oil and fuel hoses do not allow lines to twist when tightening.

u. Connect engine oil pressure hose (12) and torque pressure hose (3) to lower firewall fittings.

v. Connect engine fuel inlet hose (9) to lower firewall fitting and secure with clamps to lower engine support leg.

w. Prime engine oil pump. Refer to paragraph 1-8. Connect engine oil inlet hose (11), outlet hose (10), and oil tank vent hose (14) to aft firewall fittings. Install clamps to secure hoses to engine support legs. A

x. Prime engine oil pump. (Refer to paragraph 1-8.) Connect engine oil inlet hose (6, figure 4-2), outlet hose (5), and oil tank vent hose (7) to aft firewall fittings. C

y. Install clamps (1 and 4) to secure hose (2 and 5) together and hose to engine support leg. C

z. Install TOT cables to terminal block on engine fireshield, cannon plugs to the two chip detectors (10 and 11, figure 4-5), ground wire to tachometer mounting stud and electrical plug to gas producer tachometer (12).

aa. Install starter-generator (37, figure 4-1) on mounting pad (50). Install cooling duct (38) and clamps (47 and 48). To prevent cracking duct, do not overtighten clamps. Refer to paragraph 9-43.

NOTE

Install compressor section armor (passive defense system) as required.

ab. Connect the engine to transmission driveshaft at the freewheeling unit. Refer to paragraph 6-15.

ac. Remove covers from exhaust and inlet ports. Install engine cowl and exhaust stacks (1), clamps (2), and accessory drive vent hose (13).

ad. Inspect engine to ensure all installations are complete and secure.

CAUTION

Ensure combustion chamber drain hose (15, figure 4-1) has been properly torqued and does not rub on the tail rotor driveshaft. Refer to figure 4-6. Drain hose must be snug, restrained from rotation after nut is torqued.

ae. Service engine oil tank. Refer to paragraph 1-7.

af. Lubricate tail rotor driveshaft coupling splines with grease (C77) and install tail rotor driveshaft.

ag. Rig all controls and perform operational check of engine. Refer to TM 55-2840-241-23 and TM 55-1520-228-10.

4-34. BLEED AIR INSTALLATION.

4-35. DESCRIPTION — BLEED AIR INSTALLATION. The bleed air lines from the engine supply air for the environmental control as necessary. Bleed air is mixed with outside air to maintain a comfortable environment within the helicopter.

4-36. INSPECTION — BLEED AIR INSTALLATION. Inspect metal tubes and fittings (figure 4-3) for leaks, nicks, evidence of leakage, and security. If crack is suspected, refer to TM 1-1520-254-23, Technical Manual Aviation Unit Maintenance (AVUM) and Aviation Intermediate Maintenance (AVIM) Manual Nondestructive Inspection Procedures for OH-58 Helicopter Series.

4-37. REMOVAL — BLEED AIR INSTALLATION. Refer to figure 4-3, Bleed Air Installation.

4-38. REPAIR/REPLACEMENT — BLEED AIR INSTALLATION. Repair of bleed air tubings and fittings is limited to replacement of defective parts with the serviceable items.

4-39. INSTALLATION — BLEED AIR INSTALLATION. Refer to figure 4-3, Bleed Air Installation. Install knurled nut and new packing lubricated with engine oil (C103) between two expandable washers on the aft side of the beaded end of bleed air lines.

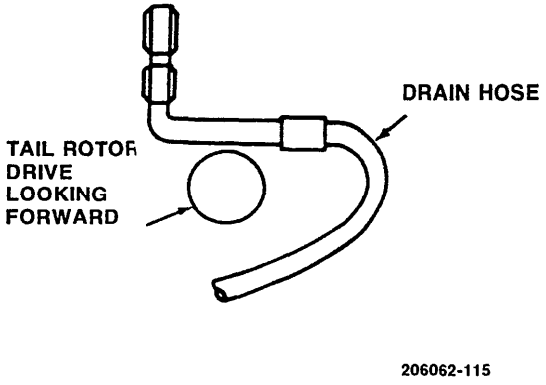

Figure 4-6. Combustion Chamber Drain Hose Installation

SECTION II COOLING SYSTEM

(Not Applicable)

SECTION III AIR INDUCTION SYSTEM

4-40. AIR INDUCTION SYSTEM.

4-41. DESCRIPTION — AIR INDUCTION SYSTEM. The engine air inlet system consists of an induction fairing with air inlets on each outboard side. This fairing provides mounting for the particle separator. Removable reverse flow inlet fairing may be installed over the air inlets on modified induction fairings. These reverse flow fairings minimize ram effect of falling or blowing snow, thus permitting effective operation of the particle separator and preventing engine flame-out caused by ingestion of snow.

NOTE

Dirty or clogged air induction system may cause high TOT during start.

4-42. PARTICLE SEPARATOR.

4-43. DESCRIPTION — PARTICLE SEPARATOR. The particle separator removes dirt and other contaminants from the incoming air and ejects the dirt out eductor tubes on either side of the fairing. This allows cleaned air to enter the engine compressor section.

Premaintenance Requirements for Removal and Repair of Particle Separator

Condition	Requirements
Model	OH-58A/C
Part No. Serial No.	All
Special Tools	(T38)Fluorescent Penetrant Method
Reference	TM 1-1520-254-23
Test Equipment	None
Support Equipment	None
Minimum Personnel Required	One
Consumable Materials	(C2) (C61) (C69) (C136)
Special Environmental Conditions	None

4-44. CLEANING — PARTICLE SEPARATOR.

CAUTION

Do not use water hotter than 140°F (60°C) when cleaning particle separator. Exercise care in all cleaning phases to prevent damage to filter elements. Do not exert any pressure on the swirls.

a. Ensure eductor tubes are removed.

b. Remove trash from interior of particle separator through openings where eductor tubes were installed.

c. Clean particle separator, using a dishwashing compound (C61) and lukewarm water.

d. Rinse with clean water and allow to dry.

4-45. INSPECTION — PARTICLE SEPARATOR.

a. Inspect for cracked, damaged, loose, clogged, or missing filter elements. If crack is suspected, refer to TM 1-1520-254-23, Technical Manual Aviation Unit Maintenance (AVUM) and Aviation Intermediate Maintenance (AVIM) Manual Nondestructive Inspection Procedures for OH-58 Helicopter Series.

NOTE

Use only light finger pressure to determine security of the swirls in the element tubes. Firm pressure will break the adhesive bond between the swirl and the tube and result in a loose swirl.

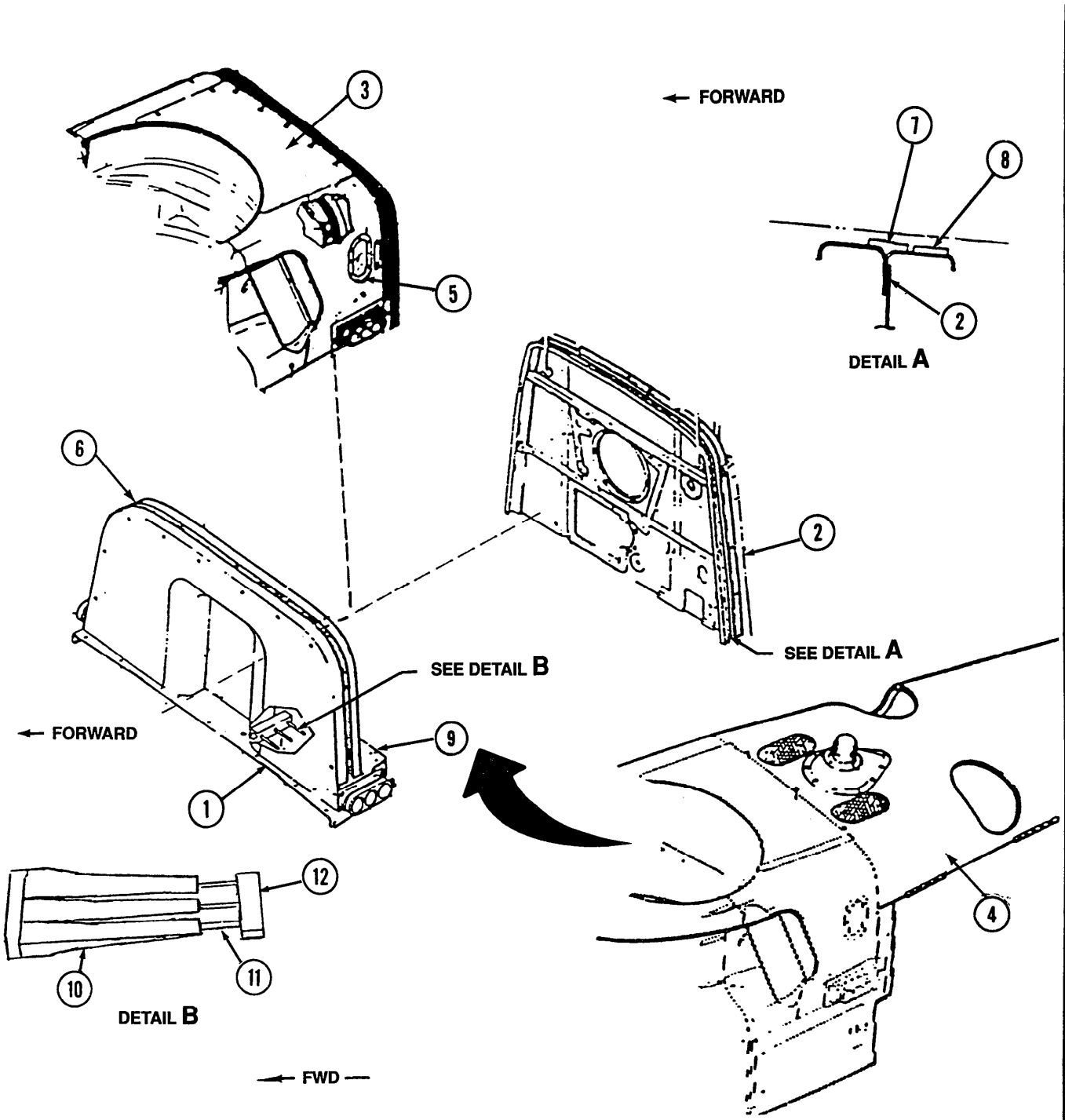

1. Particle Separator
2. Forward Firewall
3. Induction Fairing
4. Engine Cowl
5. Window (REF)
6. Seal
7. Seal P/N 206-062-901-153
8. Seal P/N 206-062-901-157
9. Ejector System Box
10. Eductor Tube (Plastic)
11. Nozzle
12. Manifold Block
13. Gasket P/N 206-062-901-73

Figure 4-7. Particle Separator (Sheet 1 of 2)

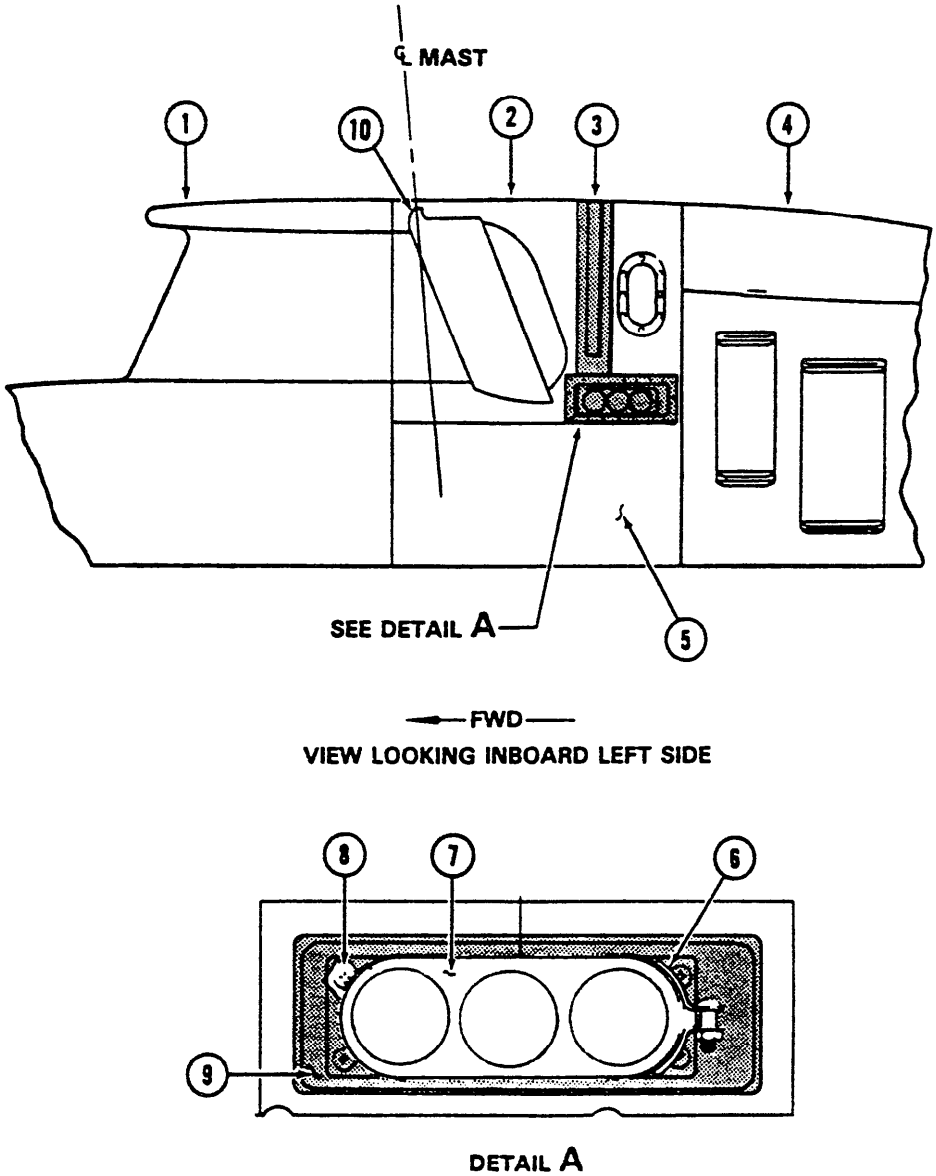

1. Forward Transmission Fairing
2. Induction Fairing
3. Particle Separator
4. Engine Cowl
5. Induction Fairing Access Door
6. Clamp
7. Educator Tube
8. Screw
9. Rubber Boot
10. Reverse Flow Inlet Fairing

Figure 4-7. Particle Separator (Sheet 2 of 2)

(1) Cracks in filter element tubes are acceptable if no two cracks converge.

(2) Damage to the swirl vanes is considered negligible if no more than **0.250** inch of the leading or trailing edge of each vane is eroded away or broken off. Jagged tears in the first **0.250** inch of each vane should be trimmed off to prevent further tearing.

b. Inspect for security and condition of mounting screws and nutplates. If crack is suspected, refer to TM 1-1520-254-23, Technical Manual Aviation Unit Maintenance (AVUM) and Aviation Intermediate Maintenance (AVIM) Manual Nondestructive Inspection Procedures for OH-58 Helicopter Series.

c. Inspect case front and rear for cracks, security, and fit. Replace particle separator if cracks exist. If crack is suspected, refer to TM 1-1520-254-23, Technical Manual Aviation Unit Maintenance (AVUM) and Aviation Intermediate Maintenance (AVIM) Manual Nondestructive Inspection Procedures for OH-58 Helicopter Series.

d. Inspect eductor tubes for cracks, distortion, brittleness, restrictions, and security of mounting.

(1) Damage inboard of mounting requires replacement of eductor tubes.

(2) Damage outboard of mounting which does not affect security of mounting is permissible.

e. If blockage of the ejector system is suspected, inspect as follows:

(1) Inspect all bleed air lines and fittings from the engine to the particle separator for air leaks.

(2) With the engine running, check for pressure flow at each of the six eductor tubes (10, figure 4-7, sheet 1). A suggested method is by using a soft rag such as a handkerchief.

(3) If pressure is not at each of the eductor tubes, check all of the bleed air lines and fittings for possible air leaks.

(4) If any of the six editor tubes do not have positive pressure present, insert a plastic tube (approximately 7/16 inch inside diameter) into the eductor tube (10) and over the nozzle (11). Check to make sure the manifold block (12) is not blocked internally (blow into the tube).

(5) If pressure is not present, remove the nozzle and visually check that the nozzle internal passage is not obstructed. Refer to paragraph 4-47.

CAUTION

The nozzle internal diameter is a precise size; changing its shape or size will result in an engine power loss.

f. Inspect rubber boot for security, tears, and deterioration.

WARNING

Acetone is extremely flammable and toxic to eyes, skin, and respiratory tract. Wear protective gloves and goggles/face shield. Avoid repeated or prolonged contact. Use only in well-ventilated areas (or use approved respirator as determined by local safety/industrial hygiene personnel). Keep away from open flames, sparks, hot surfaces or other sources of ignition.

NOTE

The following is a temporary repair only.

g. If boot (9, figure 4-7, sheet 2) fails the preceding inspection, remove boot by cutting boot around the edge of the eductor tube. Retain clamp (6) for later use. Discard cut portion of boot. Clean the remaining portion of the boot and the adjacent part of the eductor with acetone (C2) and seal the area between the eductor tube and boot with sealant (C129).

NOTE

The exterior of the induction fairing may show signs of improper fit and deteriorating seals by producing "tracks", a indication of air entering through opening or defective seals.

h. Inspect particle separator to induction fairing for fit and sealing. If areas of leakage are found, remove particle separator and repair seal. Refer to paragraph 4-46 and 4-47.

NOTE

Higher engine wear can be caused by air leakage around the particle separator from deteriorated seals or poor fit of the cowling, allowing erosive material into the engine. Most leakage occurs at the seal between the induction fairing and the forward firewall. However, any opening where air can be drawn into the engine other than through the particle separator must have an adequate seal. Other areas of concern are the engine bellmouth seal and the sides of the induction fairing and mating surfaces of the forward firewall facing gasket and the particle separator ejector system box.

i. Inspect forward firewall seals (7 and 8, figure 4-7, sheet 1) and gasket (13) for fit and sealing. If areas of leakage are found, repair seals and/or gaskets. Refer to paragraph 4-47.

NOTE

Minor leaks found between forward firewall gasket (13) and particle separator ejector box (9) may be stopped by applying a bead of RTF (C159) along the faying surfaces.

4-45.1. DELETED.

4-46. REMOVAL — PARTICLE SEPARATOR.

a. Remove forward transmission fairing (1, figure 4-7, sheet 2). Refer to paragraphs 2-39 A or 2-40 C .

b. Remove transmission induction fairing (2).

c. On helicopters equipped with the improved particle separator installation proceed as follows:

(1) If installed, remove attaching hardware and reverse flow inlet fairings.

WARNING

Acetone is extremely flammable and toxic to eyes, skin, and respiratory tract. Wear protective gloves and goggles/face shield. Avoid repeated or prolonged contact. Use only in well-ventilated areas (or use approved respirator as determined by local safety/industrial hygiene personnel). Keep away from open flames, sparks, hot surfaces or other sources of ignition.

(2) Remove clamp (6, figure 4-7) securing rubber boot (9) to each eductor tube (7) on right and left side of induction fairing. If the clamp (6) is missing and the area around the eductor tubes was previously sealed with sealant (C129), scrape off the bulk of the old sealant using a plastic scraper and remove the remaining sealant with acetone (C2) and scouring pad (C109).

(3) Remove four screws (8) attaching each eductor tube (7) to particle separator (3) on right and left side of induction fairing.

(4) Remove eductor tubes (7) from particle separator (3).

d. Remove 21 screws attaching particle separator (3) to induction fairing (2) (10 from around top, 7 from underneath and 4 from induction fairing side channel into particle separator).

e. Remove particle separator (3) from induction fairing (2).

4-47. REPAIR — PARTICLE SEPARATOR.

a. Individual filter elements failing inspection in paragraph 4-45, step 4-45a. (1) may be blocked off by placing a piece of tape (C136) over the element opening. Silicone RTV, adhesive/sealant, (C18.1), may be utilized in lieu of tape (C136) for blocking off the filter elements. Seal off filter element using silicone RTV and allow to cure per manufacturers instructions..Separators containing 25 or more damaged two-piece filter elements must be repaired. Separators with 25 or more damaged one-piece elements must be replaced.

NOTE

The majority of particle separators in the field contain reparable two-piece filter elements. Most reparable elements are white (colorless) though some may be other colors except black. All black filter elements are one-piece and cannot be repaired.

b. Repair two-piece elements as follows: (AVIM)

NOTE

The repair kit contains material to repair 20 filter elements. Determine number of elements to be repaired and order kits accordingly.

(1) Prepare outlet holes by removing any extraneous epoxy compound which might interfere with outlet installation. (Hole diameter **0.599 to 0.604** inch.)

(2) Place outlet (4, figure 4-8) over installation tool (T38), faired end toward tool, and insert outlet into outlet plate from rear side of housing. Gently push tool until outlet is firmly in place. The outlet groove will firmly seat the outlet in its proper orientation.

(3) Install the vortex generator in the vortex tube from the front side of panel. Allow center of vortex generator to protrude from vortex tube approximately **0.094** inch.

(4) Mix resin and hardener completely for at least two minutes. Mix two ounces of AA-9500-1D140 Part A with 0.6 ounce Part B, or mix Part A with Part B in 20:6 ratio by volume.

NOTE

Installation should be completed prior to mixing epoxy. Compound is usable for approximately 30 minutes.

(5) Put mixed epoxy into 2.50 cc syringe with needle attached.

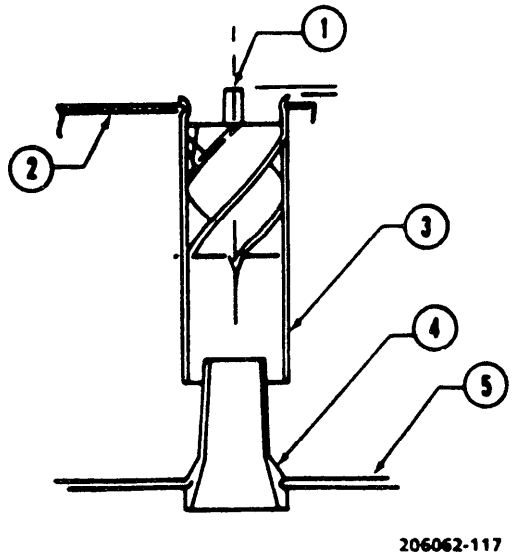

1. Vortex Generator Swirls
2. Tube Plate (Front)
3. Vortex Tube
4. Outlet
5. Outlet Plate (Rear)

Figure 4-8. Cross-section of Particle Separator

(6) Apply epoxy to each vane of vortex generator to secure it to vortex tube. Apply epoxy completely around outlet to secure it to the outlet plate.

(7) Position particle separator so outlet tubes are vertical to prevent dripping of epoxy and allow to remain in position for **12 to 24** hours for complete cure of epoxy.

c. Loose swirls may be repaired at scheduled maintenance periods by pulling the swirls back in place and bonding with fairing compound (C69) thinned to brushing consistency with thinner (C148). Apply mixture carefully with an artist paint brush.

d. Repair the particle separator to induction fairing seal as follows:

WARNING

Acetone is extremely flammable and toxic to eyes, skin, and respiratory tract. Wear protective gloves and goggles/face shield. Avoid repeated or prolonged contact. Use only in well-ventilated areas (or use approved respirator as determined by local safety/industrial hygiene personnel). Keep away from open flames, sparks, hot surfaces or other sources of ignition.

(1) Clean off seal area to be replaced by scraping off old seal (6, figure 4-7, sheet 1) followed by cleaning with acetone (C2).

(2) Peel cover from adhesive side of seal.

(3) Install seal to previous seal location.

(4) Trim any excess seal (a razor is acceptable).

(5) Inspect plenum chamber area and remove any foreign or repair material.

(6) Reinstall particle separator (if removed) and induction fairing. Refer to paragraph 4-48.

e. Repair the forward firewall seals as follows:

NOTE

This repair can also be applied to the forward firewall gasket.

(1) Remove both old seals (7 and 8, figure 4-7, sheet 1) from firewall.

WARNING

Acetone is extremely flammable and toxic to eyes, skin, and respiratory tract. Wear protective gloves and goggles/face shield. Avoid repeated or prolonged contact. Use only in well-ventilated areas (or use approved respirator as determined by local safety/industrial hygiene personnel). Keep away from open flames, sparks, hot surfaces or other sources of ignition.

(2) Clean off seal area by scraping off any old seal and sealing material followed by cleaning with acetone (C2).

(3) The seal (7), P/N 206-062-901-153 will be installed over gaps between the fore and aft firewall flanges.

WARNING

Acetone is extremely flammable and toxic to eyes, skin, and respiratory tract. Wear protective gloves and goggles/face shield. Avoid repeated or prolonged contact. Use only in well-ventilated areas (or use approved respirator as determined by local safety/industrial hygiene personnel). Keep away from open flames, sparks, hot surfaces or other sources of ignition.

(4) Abrade silicone rubber seal with 80 grit abrasive paper. Clean the abraded area with acetone (C2) wetted cloth. Wipe the area dry with a clean dry cloth.

(5) Sand off firewall in bonding area to bare metal.

WARNING

Aliphatic Naphtha is flammable and toxic to eyes, skin, and respiratory tract. Wear protective gloves and goggles/face shield. Avoid repeated or prolonged contact. Use only in well-ventilated areas (or use approved respirator as determined by local safety/industrial hygiene personnel). Keep away from open flames, sparks or other sources of ignition.

(6) Clean the area by wiping with a cloth wetted with Aliphatic Naphtha, Type II

(7) Wipe the area dry with a clean, dry cloth.

(8) Brush silicone primer (TT-P-1757) to the non-silicone surface to be bonded.

(9) Air-dry the primer for a minimum of 30 minutes.

(10) Brush a 10 to 15 mil. coating of the mixed adhesive (A4000) (C34) to both surface to be bonded.

(11) Air-dry the adhesive (A4000) (C34) for a minimum of one hour and not to exceed eight hours.

(12) Apply seal (7) bead side down, along center of firewall flanges gap. Press together the two adhesive coated surfaces. Apply firm pressure until cured.

(13) Cure seal application for 24 hours at room temperature for 50 percent holding strength. Maximum cure is 4 to 7 days.

NOTE

Use the following if accelerated cure cycle is needed:

TEMPERATURE	TIME (HOURS)
120 Degree Max (Air Circulating Oven)	**18 Maximum Cure**

(14) Install aft seal (8), P/N 206-062-901-157 to aft part of firewall (2) with pro-seal.

(15) The above cleaning and sealing procedures will also apply to the mating surface area of the forward gasket (13, figure 4-7) and the particle separator ejector system box (9) if the gasket is removed.

(16) Leakage can be checked for the forward firewall gasket and the ejector system box area by running a flashlight across the mating surfaces and looking through the fairing windows for light penetration.

f. An alternate repair method for the particle separator to induction fairing seal is as follows:

WARNING

Acetone is extremely flammable and toxic to eyes, skin, and respiratory tract. Wear protective gloves and goggles/face shield. Avoid repeated or prolonged contact. Use only in well-ventilated areas (or use approved respirator as determined by local safety/industrial hygiene personnel). Keep away from open flames, sparks, hot surfaces or other sources of ignition.

NOTE

The following alternate repair method may also be used for the forward firewall seals and the forward firewall gasket.

(1) Clean off seal area to be repaired by scraping off any old seal and sealing material followed by cleaning with acetone (C2).

(2) Mask area where seal is to be applied with tape (C143).

(3) Apply a bead of room temperature vulcanized (RTV) adhesive (C159) to the seal repair area.

(4) Cover the uncured RTV with plastic sheet (C160). (To create a parting surface).

(5) Install induction fairing (3, figure 4-7, sheet 1) on particle separator with fasteners finger tight and allow RTV to cure.

NOTE

Local application of heat not to exceed 125 degrees Fahrenheit will aid curing. Excessive heat may cause bubbles or poor adhesion.

(6) Remove induction fairing from particle separator and remove plastic sheet.

NOTE

Check that RTV has cured and if necessary allow additional time for curing with the plastic sheet removed.

(7) Trim RTV (a razor is acceptable) and remove masking tape.

(8) Inspect plenum area and remove any foreign or repair material.

(9) Reinstall particle separator and induction fairing. Refer to paragraph 4-48.

(10) Leakage can be checked for the forward firewall gasket and ejector system box area by running a flashlight across the mating surfaces and looking through the fairing window for light penetration.

g. Removal and replacement of particle separator nozzles is as follows:

(1) Install a 5/16 extra deep hex socket onto a socket extension and wrench.

CAUTION

Use care when removing the nozzle to avoid damage to the rubber boot on the eductor assembly.

NOTE

Socket must be capable of 2 1/16 inch depth and 1/4 inch diameter or greater clearance. If a standard deep socket is used there may be insufficient clearance in eductor tube.

(2) Insert socket wrench into the eductor tube and remove nozzle.

(3) Apply loctite to replacement nozzle threads.

(4) Place nozzle in socket extension and install nozzle in eductor tube.

(5) Torque nozzle, 50 to 70 Inch-Pounds.

4-48. INSTALLATION — PARTICLE SEPARATOR.

CAUTION

Ensure particle separator, engine compressor inlet area and the surrounding area is free of all foreign material prior to installation of the particle separator.

a. Position particle separator (3, figure 4-7, sheet 2) in aft section of induction fairing (2).

b. Secure particle separator to induction fairing with 21 screws (10 around top, 7 underneath, and 4 through induction fairing side channel into particle separator). To avoid crushing aft separator wall, apply torque to **10 TO 12 INCH-POUNDS** to 10 upper screws. Apply torque to **15 TO 20 INCH-POUNDS** to all other screws.

c. On helicopters equipped with the improved particle separator installation, proceed as follows:

CAUTION

Use care when installing eductor to prevent tearing rubber boot.

(1) Insert eductor tubes (7) into particle separator (3) and secure each with four screws (8).

WARNING

Acetone is extremely flammable and toxic to eyes, skin, and respiratory tract. Wear protective gloves and goggles/face shield. Avoid repeated or prolonged contact. Use only in well-ventilated areas (or use approved respirator as determined by local safety/industrial hygiene personnel). Keep away from open flames, sparks, hot surfaces or other sources of ignition.

(2) Stretch rubber boot (9) over each eductor tube (7) and secure with clamp (6). If the area between the eductor tube and boot was previously sealed with sealant (C129), clean the remaining portion of the boot and the adjacent part of the eductor tube with acetone (C2) and seal the area with sealant (C129).

(3) Install reverse flow inlet fairings with removed attaching hardware.

NOTE

When removing inlet fairings, addition of one washer is required under upper forward turn lock fastener of left and right fairing to attain adequate locking tension. Other hardware must be reinstalled in nut plates with additional washers to prevent bottoming of thread.

d. Install induction fairing.

e. Install forward transmission fairing. Refer to paragraph 2-43.

4-49. ENGINE ANTI-ICING CONTROL.

4-50. INSPECTION — ENGINE ANTI-ICING CONTROL. The engine anti-icing actuator (1, figure 4-9), located on upper forward section of engine, provides electrical remote control of the engine anti-icing control valve and is energized through the **ENG. DE-ICE** circuit breaker and **ENG. DE-ICE** switch on the overhead console.

4-51. INSPECTION — ENGINE ANTI-ICING CONTROL. Actuate **ENG. DE-ICE** switch and observe that actuator responds until it stops of its own accord in **ON** and **OFF** positions. Replace if actuator fails to operate. Check for preload. Refer to paragraph 4-53. If crack in engine anti-icing control is suspected, refer to TM 1-1520-254-23, Technical Manual Aviation Unit Maintenance (AVUM) and Aviation Intermediate Maintenance (AVIM) Manual Nondestructive Inspection Procedures for OH-58 Helicopter Series.

4-52. REMOVAL — ENGINE ANTI-ICING CONTROL.

a. Remove engine cowling.

b. Disconnect electrical harness from actuator.

c. Remove pin (11, figure 4-9), washer (9), and cotter pin (8) attaching connecting link assembly (7) to anti-icing valve lever (16).

d. Remove pin (4), washer (5), and cotter pin (6) attaching tube assembly to actuator level (3).

e. Remove lockwire, bolts (17 and 19), washers (18 and 20), and spacers (21 and 22). Remove actuator (1) with bracket (15) from engine.

f. Remove lockwire, loosen screw (2), and remove actuator lever (3).

g. Remove four screws (13) and washers (14) attaching actuator (1) to mounting bracket (15) and remove actuator.

4-53. INSTALLATION AND RIGGING — ANTI-ICING CONTROL.

a. Install four screws (13, figure 4-9) and washers (14) attaching actuator (1) to mounting bracket (15) and lockwire (C96). Actuator travel limit microswitch may be adjusted when required per figure 4-10.

b. Install bracket (15) with actuator (1) using spacers (21 and 22), washers (18 and 20), and bolts (17 and 19). Torque bolts (17) **40 TO 65 INCH-POUND** and install lockwire (C96). Torque bolt (19) **75 TO 110 INCH-POUND** and install lockwire (C96).

c. Connect electrical harness to actuator (1).

d. Loosen jamnut (12), and remove rod end clevis (10) from connecting link (7). Count the threads on clevis and install jamnut (12) halfway up on the threads of clevis. Install clevis into connecting link (7).

e. Install clevis (10) on anti-icing valve lever (16) with pin (11) for trial installation. Install aft end of connecting link (7) to actuator lever (3) with pin (4).

f. Move connecting link assembly (7) forward to close anti-icing valve on engine and install lever (3) on serrations of actuator (1). It may be necessary to adjust clevis (10) so that lever (3) will fit serrations. Tighten locking screws (2) and install lockwire. Hold valve closed during this operation.

NOTE

In some cases when rigging engine anti-icing actuator and valve, the clevis has been found to bottom against base of threads on rod. This may be corrected by shortening threaded portion of clevis to dimensions shown in figure 4-11; protect unprimed area with primer (C118).

g. Remove pin (11, figure 4-9) and adjust clevis (10) until pin moves freely in hole. Unscrew clevis 1/2 turn to preload seating of valve. Tighten jamnut (12). Actuator switch to on. Check that actuator motor hits internal microswitch and stops before valve hits mechanical stop in full open position.

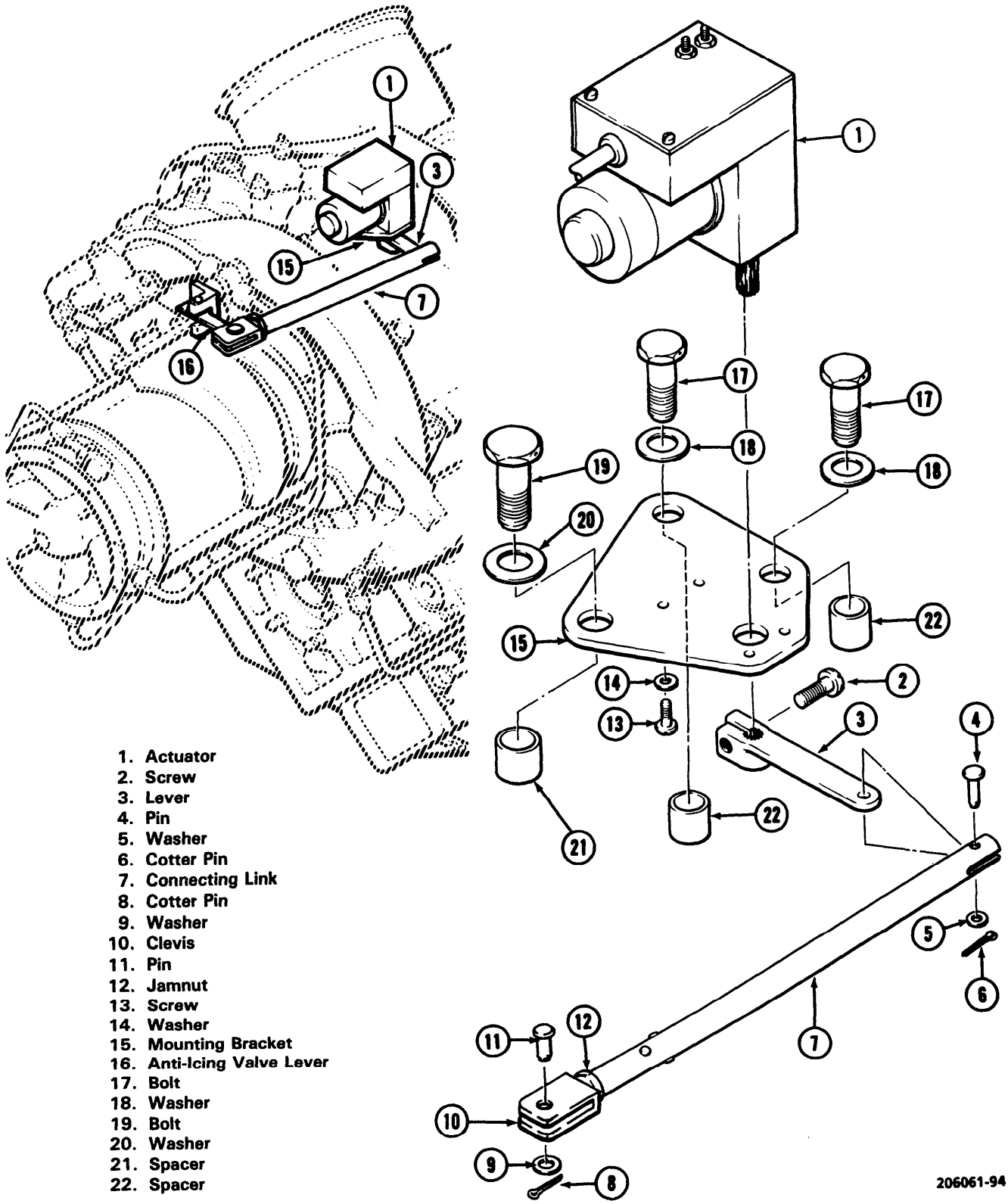

Figure 4-9. Anti-Icing Control

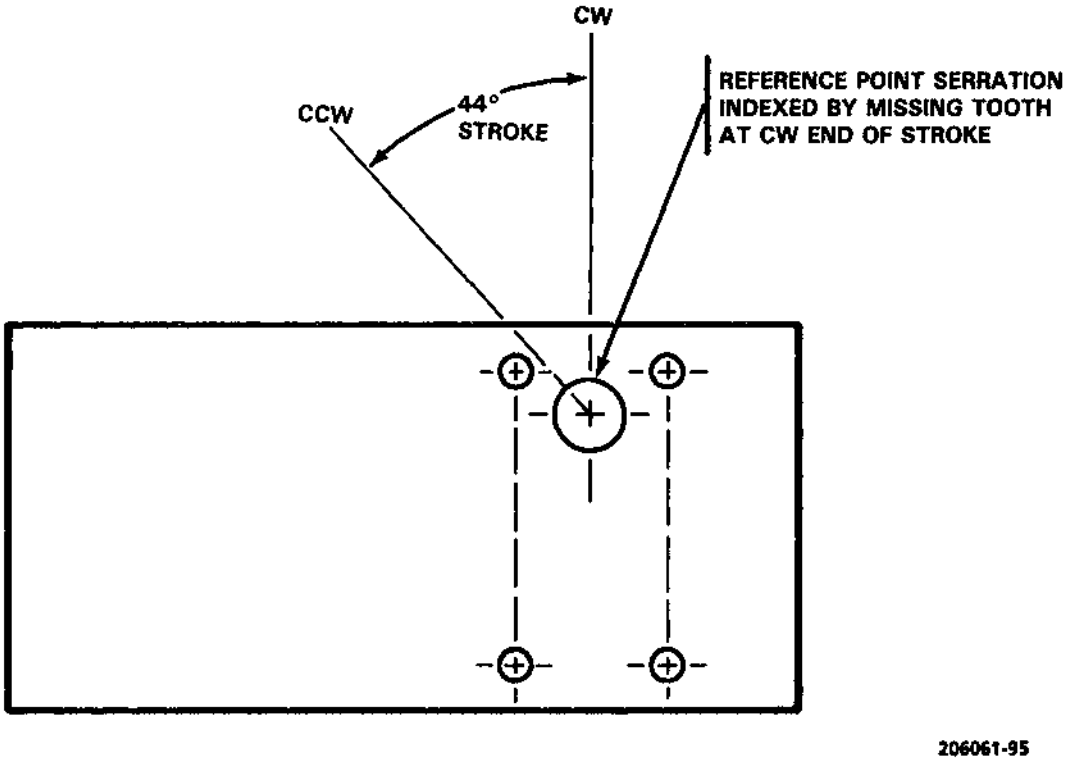

Figure 4-10. Actuator Travel Limit Microswitch Adjustment

h. Secure pins (4 and 11) to connecting link (7) with washers (5 and 9) and cotter pins (6 and 8) and lockwire (C96) locking screw (2) on actuator lever (3).

i. Install engine cowling.

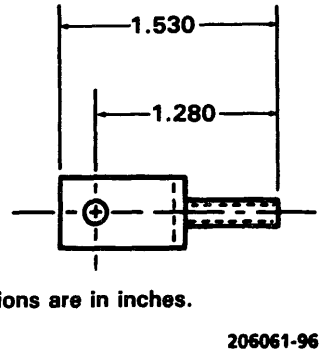

Figure 4-11. Alteration of Engine Anti-Ice Clevis

SECTION IV EXHAUST SYSTEM

4-54. EXHAUST SYSTEM.

4-55. DESCRIPTION — EXHAUST SYSTEM. The exhaust system consists of two exhaust stacks (1, figure 4-12). The exhaust stacks are held in place by a clamp which is located on each side of the engine. Refer to table 4-1, Standard Exhaust Stack.

4-56. INSPECTION — EXHAUST SYSTEM. Inspect the engine exhaust attaching flange area for warping, dents, cracks, and burned spots that would cause a leaking exhaust joint. Inspect exhaust stack clamp for cracks and corrosion. If crack is suspected, refer to TM 1-1520-254-23, Technical Manual Aviation Unit Maintenance (AVUM) and Aviation Intermediate Maintenance (AVIM) Manual Nondestructive Inspection Procedures for OH-58 Helicopter Series.

4-57. INSPECTION — EXHAUST SYSTEM. Refer to table 4-1.

Premaintenance Requirements for Removal of Exhaust System

Condition	Requirements
Model	OH-58A/C
Part No. or Serial No.	All
Special Tools	Fluorescent Penetrant Method
Reference	TM 1-1520-254-23
Test Equipment	None
Support Equipment	None
Minimum Personnel Required	One
Consumable Materials	(C96) (C18)
Special Environmental Conditions	None

4-58. REMOVAL — EXHAUST SYSTEM

a. Remove engine cowling. Refer to paragraph 2-46 for P/N 206-061-300.

b. Open left and right cowl side panels (7, figure 2-1). Remove clamps (2, figure 4-12).

c. Remove exhaust stacks (1 and 3).

4-59. REPAIR — STANDARD EXHAUST SYSTEM. Refer to table 4-1.

4-60. REPAIR INFRARED EXHAUST SYSTEM. Refer to table 4-1.

4-61. INSTALLATION — EXHAUST SYSTEM. Refer to table 4-1.

a. Position exhaust stacks (1, figure 4-12) in engine cowling and install on helicopter. Refer to paragraph 2-49.

b. Position exhaust stack (1 and 3) and clamp (2) on engine exhaust collector with clamp studs facing outboard.

c. Install nuts on clamp studs and torque **30 INCH-POUNDS** with equal amounts of stud threads exposed. Tap around the clamp with a soft faced mallet. Recheck torque. Repeat this procedure until **30 INCH-POUNDS** of torque can be maintained.

NOTE

Do not lockwire nuts to clamp at this time.

d. Deleted.

e. Ground run helicopter for 10 minutes.

NOTE

During ground run exhaust clamp will seat into place and 30 INCH-POUNDS torque may be lost.

f. After ground run and with **15** minutes, retorque clamp nuts to **30 INCH-POUNDS.** Lockwire (C96) nuts to damp.

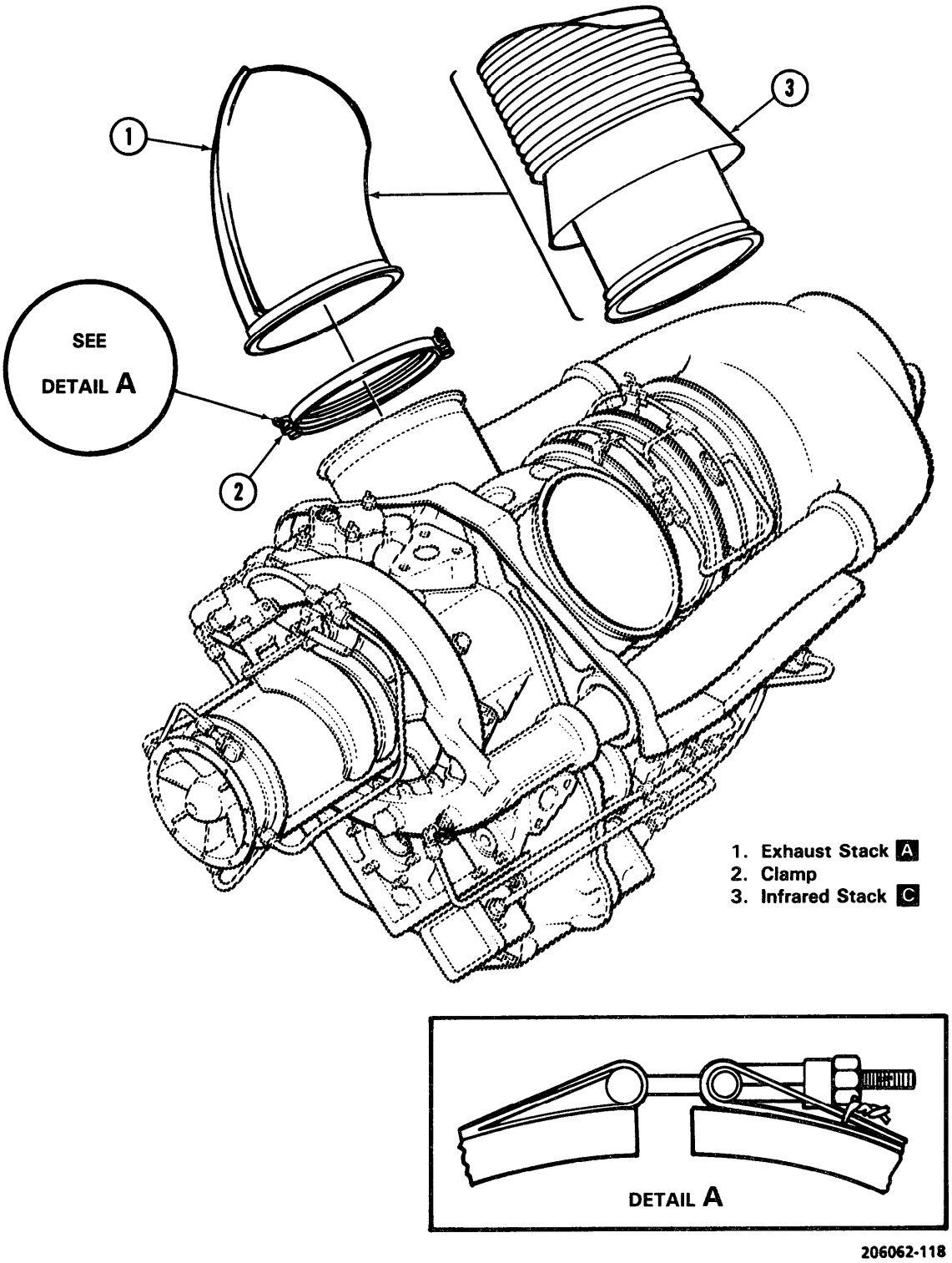

Figure 4-12. Engine Exhaust Stack

Table 4-1. Inspection and Repair of Exhaust Stack

Infrared Stack

INSPECTION	REPAIR
1. Check for secure installation of exhaust stack to engine exhaust flange. Inspect exhaust stack clamp for cracks and corrosion. If crack is suspected, refer to TM 1-1520-254-23, Technical Manual Aviation Unit Maintenance (AVUM) and Aviation Intermediate Maintenance (AVIM) Manual Nondestructive Inspection Procedures for OH-58 Helicopter Series.	1. If stack is loose, remove lockwire and torque clamp nuts to **30 INCH-POUNDS.** Ground run helicopter for 10 minutes. Torque clamps to **30 INCH-POUNDS.** Lockwire (C96) nuts to clamp. If clamps are cracked or corroded, replace clamps.
2. Inspect engine exhaust attach flange for warping, dents, cracks, and burned spots that would cause a leaking exhaust joint. If crack is suspected, refer to TM 1-1520-254-23, Technical Manual Aviation Unit Maintenance (AVUM) and Aviation Intermediate Maintenance (AVIM) Manual Nondestructive Inspection Procedures for OH-58 Helicopter Series.	2. Refer toTM 55-2840-241-23.
3. Visually inspect stainless steel stack interior for holes or cracks. If crack is suspected, refer to TM 1-1520-254-23, Technical Manual Aviation Unit Maintenance (AVUM) and Aviation Intermediate Maintenance (AVIM) Manual Nondestructive Inspection Procedures for OH-58 Helicopter Series.	3. Repair stack structures in accordance with TM 1-1500-204-23. Alternately, a patch of steel (item 49, table 2-1) may be welded over openings. Cracks may be fusion welded. **NOTE** Exhaust stacks must be removed for any welding repair.
4. Visually inspect stack exterior for holes or breaks in insulation outer jacket. If crack is suspected, refer to TM 1-1520-254-23, Technical Manual Aviation Unit Maintenance (AVUM) and Aviation Intermediate Maintenance (AVIM) Manual Nondestructive Inspection Procedures for OH-58 Helicopter Series.	4. Holes or breaks may be sealed by spotwelding a metal patch (item 47, table 2-1) in place, or by using silver solder IAW TM TM 1-1500-204-23-8. In the event welding equipment is not available, adhesive (C16) may be used to fill holes or breaks until permanent repairs (welding) can be made
5. Visually inspect the brackets separating the two stacks for cracks. If crack is suspected, refer to TM 1-1520-254-23, Technical Manual Aviation Unit Maintenance (AVUM) and Aviation Intermediate Maintenance (AVIM) Manual Nondestructive Inspection Procedures for OH-58 Helicopter Series.	5. Broken bracket may be welded by removing the adhesive (C16) and the screws/nuts on the outer stack and welding the broken bracket. Broken bracket may be removed and replaced by removing the adhesive (C18) and screws/nuts on the outer stack and removing the two 5/32 inch steel rivets on the inner stack. Replace with new or repaired bracket. Cracked bracket may be welded in place or replaced as described above. Torque bracket nuts **12 TO 15 INCH-POUNDS** or to a maximum of **25 INCH-POUNDS**.

Table 4-1. Inspection and Repair of Exhaust Stack — Continued

INSPECTION	REPAIR
6. Visually inspect the fin stacks.	6. Broken fins and/or fins pulled away from aluminum stacks may be welded. Broken fins and/or fins pulled away from aluminum stacks may also be repaired temporarily with adhesive (C18).
7. Inspect aluminum stack base plate material for cracks or holes. If crack is suspected, refer to TM 1-1520-254-23, Technical Manual Aviation Unit Maintenance (AVUM) and Aviation Intermediate Maintenance (AVIM) Manual Nondestructive Inspection Procedures for OH-58 Helicopter Series.	7. Cracks may be stop-drilled or fusion welded. Holes may be repaired with adhesive (C18) or by fusion welding aluminum (item 25, table 2-1) over the hole.

NOTES:

Welding Instructions

1. Items to be welded must be cleaned per TM 1-1500-204-23.
2. Use aluminum alloy rod (C121) for aluminum welds.
3. Use steel rod (C122) for stainless steel duct welds.

Standard Exhaust Stack

INSPECTION	REPAIR
1. Visually inspect stacks for cracks. If crack is suspected, refer to TM 1-1520-254-23, Technical Manual Aviation Unit Maintenance (AVUM) and Aviation Intermediate Maintenance (AVIM) Manual Nondestructive Inspection Procedures for OH-58 Helicopter Series.	1. Cracks may be fusion welded. Refer to TM 1-1500-204-23. **NOTE** Exhaust stacks must be removed for any welding repair.Exhaust stacks must be removed for any welding repair.
2. Visually inspect stacks for holes or breaks. If damage is suspected, refer to TM 1-1520-254-23, Technical Manual Aviation Unit Maintenance (AVUM) and Aviation Intermediate Maintenance (AVIM) Manual Nondestructive Inspection Procedures for OH-58 Helicopter Series.	2. Holes or breaks may be repaired by spot welding a metal patch (item 47, table 2-1) in place. In the event that welding equipment is not available, adhesive (C18) may be used to fill holes or breaks until permanent repairs (welding) can be made.

NOTES:

Welding Instructions

1. Items to be welded must be cleaned per TM 1-1500-204-23.
2. Use steel rod (C122) for welds.

SECTION V OIL SYSTEM

4-62. OIL SYSTEM.

4-63. DESCRIPTION — OIL SYSTEM. The engine oil system (Figure 4-13 and 4-13.1) consists of a self-sealing oil tank with a 11.20 pint capacity. A self-locking drain valve for both oil tank drain and system drains, an oil cooler, a bypass valve, a check valve, an inline external scavenge oil filter, and vent line. Provisions are included for an oil pressure indicator, a temperature indicator, and a combination, low level oil cooler bypass valve and caution light. In addition, two engine magnetic chip detectors are connected to a caution light. The oil tank and external scavenge oil filter are mounted aft of the engine rear firewall on top of the cabin section.

4-63.1. DESCRIPTION — OIL SYSTEM. After compliance with MWO 1-1520-228-50-44. The engine oil system (Figure 4-13 and 4-13.1) consist of a self-sealing oil tank with an 11.20 pint capacity, self-locking drain valve for both oil tank drain and system drain, oil cooler, a bypass valve, an inline external scavenge oil filter, and vent line. Provisions are included for an oil pressure indicator, a temperature indicator, and a combination, low level oil cooler bypass valve and caution light. In addition, two engine magnetic chip detectors are connected to a caution light. The oil tank and external scavenge oil filter are mounted aft of the engine rear firewall on top of the cabin section.

NOTE

Refer to applicable instructions in this section for cleaning and maintenance of each component.

4-64. OIL TANK

4-65. DESCRIPTION — OIL TANK. Engine oil supply tank (1, Figure 4-13) is a self-sealing 11.20 pint capacity container equipped with a sight gage (2), filler neck and cap (3), scupper with drain (4), and fittings for line connections. Tank is mounted aft of blower fan and above tail rotor driveshaft.

4-66. INSPECTION — OIL TANK.

a. Inspect tank for the following:

(1) Punctures or leaks.

(2) Damaged threads in fittings.

(3) Damage which affects capacity or function. If crack is suspected, refer to TM 1-1520-254-23, Technical Manual Aviation Unit Maintenance (AVUM) and Aviation Intermediate Maintenance (AVIM) Manual Nondestructive Inspection Procedures for OH-58 Helicopter Series.

(4) Loose, missing, or improperly installed hardware.

b. Inspect sight plugs for discoloration, damage, and proper sealing.

c. Inspect tank support for cracks and mount area on tank for cracks or damage. If crack is suspected, refer to TM 1-1520-254-23, Technical Manual Aviation Unit Maintenance (AVUM) and Aviation Intermediate Maintenance (AVIM) Manual Nondestructive Inspection Procedures for OH-58 Helicopter Series.

d. Cracks are permitted in tape on outside surface of tank as long as there is no evidence of leakage. If crack is suspected, refer to TM 1-1520-254-23, Technical Manual Aviation Unit Maintenance (AVUM) and Aviation Intermediate Maintenance (AVIM) Manual Nondestructive Inspection Procedures for OH-58 Helicopter Series.

e. Inspect engine oil tank assembly interior during inspection procedure, after drained.

4-67. REMOVAL — OIL TANK.

NOTE

Cover all openings to prevent system contamination.

a. Remove aft fairing (5, Figure 2-10 or 10, Figure 2-11) to gain access to oil tank area.

b. Drain oil into suitable container through overboard drain.

c. Remove lines, fittings, and electrical connections.

d. Remove four bolts and washers attaching oil tank to support assembly (5, Figure 4-13).

4-68. REPAIR — OIL TANK. Repair oil tank in accordance with TM 1-1500-204-23 series.

4-69. INSTALLATION — OIL TANK.

a. Replace all packings affected by removal. Replace any damaged fittings.

b. Position tank on support and install four bolts and washers.

c. Install fittings and connect lines.

d. Check drain valve (6, Figure 4-13) for closed position and service oil tank. Refer to paragraph 1-8 for servicing.

4-70. REMOVAL — LOW LEVEL SWITCH (FIGURE 4-13).

a. Drain engine oil.

b. Disconnect electrical connection from TB14 and aircraft structure.

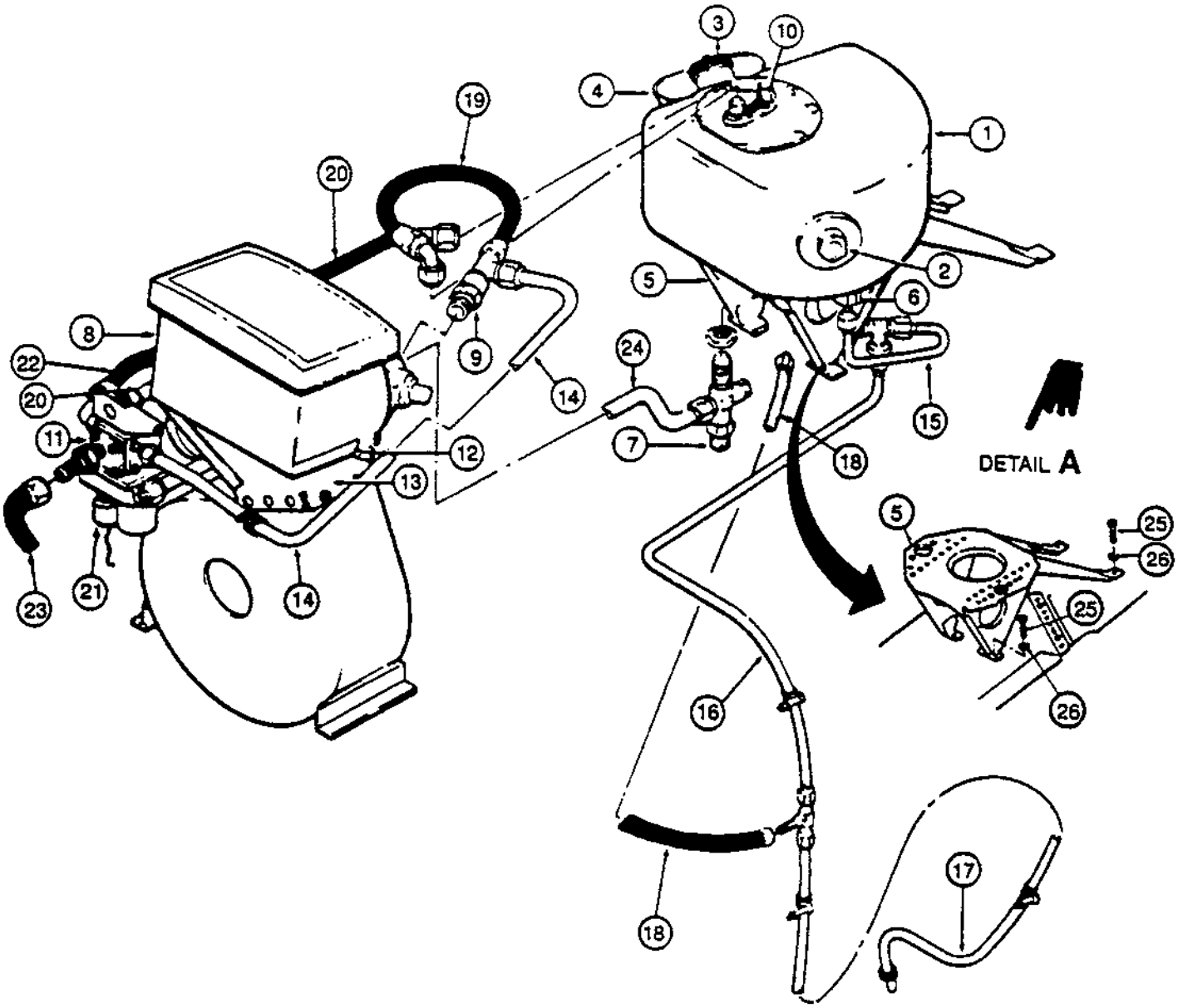

1. Oil Tank
2. Sight Gage
3. Filler neck and Cap
4. Scupper
5. Support Assembly
6. Drain Valve
7. Temperature Bulb
8. Oil Cooler
9. Check Valve
10. Low Level Switch
11. Selector (Bypass) Valve
12. Drain Plug
13. Duct Extension
14. Cooler Bypass Line — Port C
15. Drain Tank to Deck Line
16. Drain Deck to Union Line
17. Drain to Overboard Line
18. Drain Pan to Tee
19. Hose Assembly
20. Bulkhead to Tank Hose
21. Electrical Cable Assembly
22. Hose Assembly — Port B
23. Hose Assembly — Port A
24. Hose Assembly — Supply
25. Screws
26. Washers

Figure 4-13. Engine Oil System

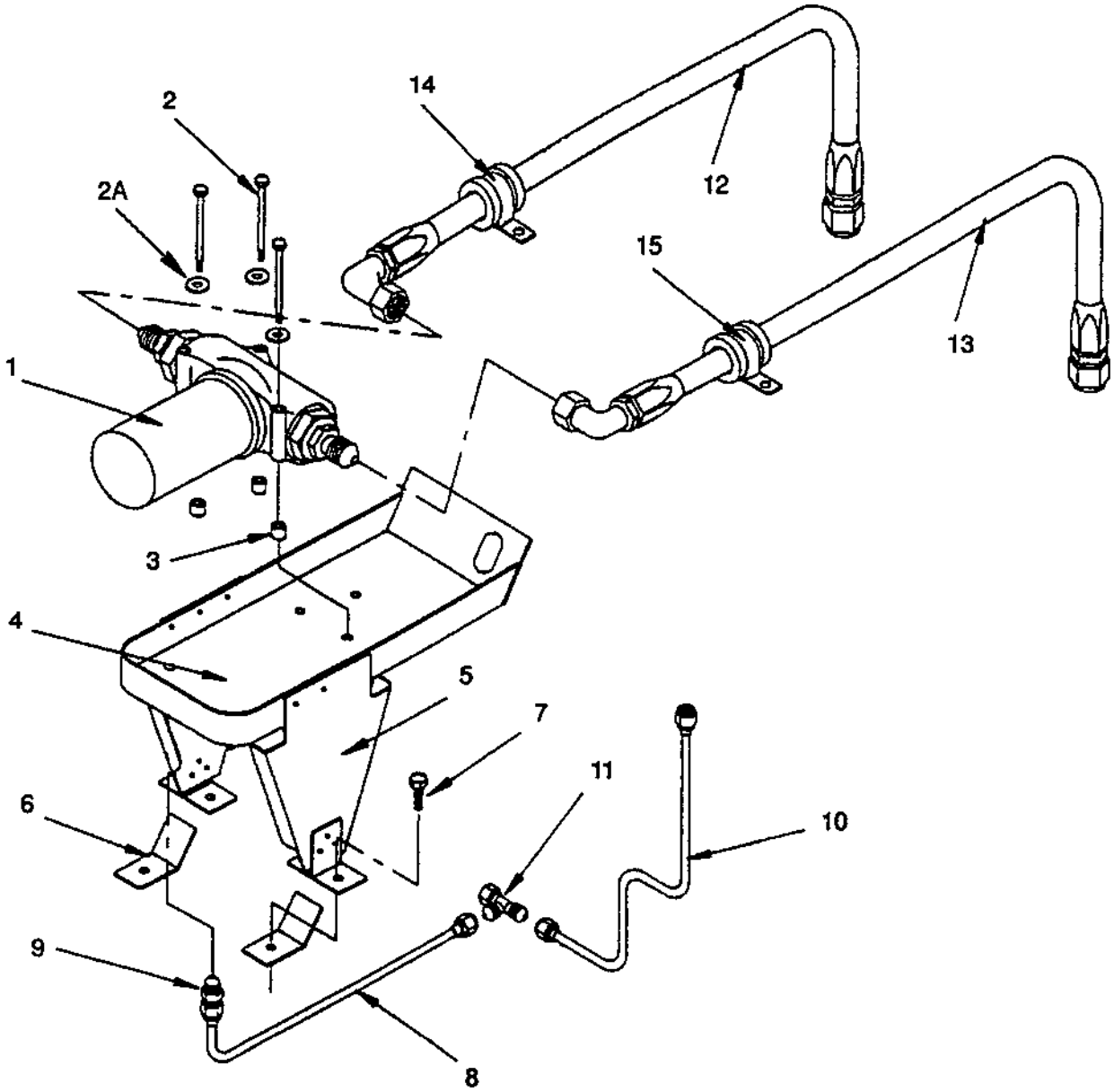

1. Filter Housing
2. Filter Attach Bolts
2A. Washer
3. Spacer
4. Mounting Tray
5. Support Bracket
6. Support Bracket Brace
7. Support Bracket Bolts
8. Scupper Drain Line for Mounting Tray
9. Scupper Tray Attach Fitting
10. Scupper Drain Line for Oil Tank Drain
11. Scupper Drain Tee Fitting
12. Oil Supply Line
13. Oil Return Line
14. Adel Clamp (1 ea)
15. Adel Clamp (2 ea)

Figure 4-13.1. Engine Oil Filter External Scavenge Oil Filter

c. Disconnect hose (19 and 20) from oil tank plate.

d. Remove plate and low level switch (10) from oil tank as an assembly; discard packing from plate.

e. Remove low level switch (10) from plate assembly.

4-71. INSTALLATION — LOW LEVEL SWITCH.

a. Install low level switch (10) on plate assembly.

b. Install packing with plate and low level switch into oil tank.

c. Connect hose (19 and 20) to oil plate.

d. Connect electrical connection to TB14 and aircraft structure.

e. Service engine oil.

4-71.1. REMOVAL — OIL TANK SUPPORT ASSEMBLY.

a. Remove oil tank. Refer to paragraph 4-67.

b. Remove 6 screws (25, figure 4-13) and 6 washers (26) securing support assembly (5) to top cabin section.

c. Remove support assembly from cabin section.

4-71.2. INSTALLATION — OIL TANK SUPPORT ASSEMBLY.

a. Remove protective finish from support assembly (5, figure 4-13) and cabin section mating surfaces to ensure electrical bonding ground.

b. Position support assembly (5) on cabin section and align screw holes in support assembly with holes in cabin.

c. Install 6 washers (26) and 6 screws (25).

d. Install oil tank. Refer to paragraph 4-69.

4-72. OIL COOLER.

4-73. DESCRIPTION — OIL COOLER. The oil cooler (8, figure 4-14) is mounted on a duct extension on the oil cooler blower. Return oil from the engine flows through the oil cooler, through a one way check valve (9, figure 4-13) and into the return line to the oil tank. In the event of damage to oil cooler, the low level switch (10) will actuate the bypass valve (11) when tank capacity gets down to 1.100 gallons and route oil around the cooler to the tank.

Premaintenance Requirements for Engine Oil Cooler

Condition	Requirements
Model	OH-58A/C
Part No. or Serial No.	All
Special Tools	Fluorescent Penetrant Method
Reference	TM 1-1520-254-23
Test Equipment	None
Support Equipment	None
Minimum Personnel Required	One
Consumable Materials	(C81) (C85) (C96)
Special Environmental Conditions	Dust Free

4-74. INSPECTION — OIL COOLER.

a. Inspect oil cooler for cleanliness of air passages.

b. Inspect oil cooler for unserviceable or damaged fittings, oil passage leaks, and elongated mount holes.

c. Inspect oil cooler top gasket (12, figure 4-14) for damage and security.

d. Remove gasket (12), and ensure that oil cooler top surface is clean; bond new gasket in place with adhesive (C9).

4-75. REMOVAL — OIL COOLER.

a. Cut lockwire on drain plug (1, figure 4-14). Remove plug and drain cooler fluid into a suitable container.

b. Disconnect inlet line (2) and return line (5).

c. Remove reducer (3) and packing (4). Discard packing.

d. Remove check valve (6) and packing (7). Discard packing.

e. Remove 13 bolts (9) and washers (10) attaching oil cooler (8) to duct (11). Remove cooler.

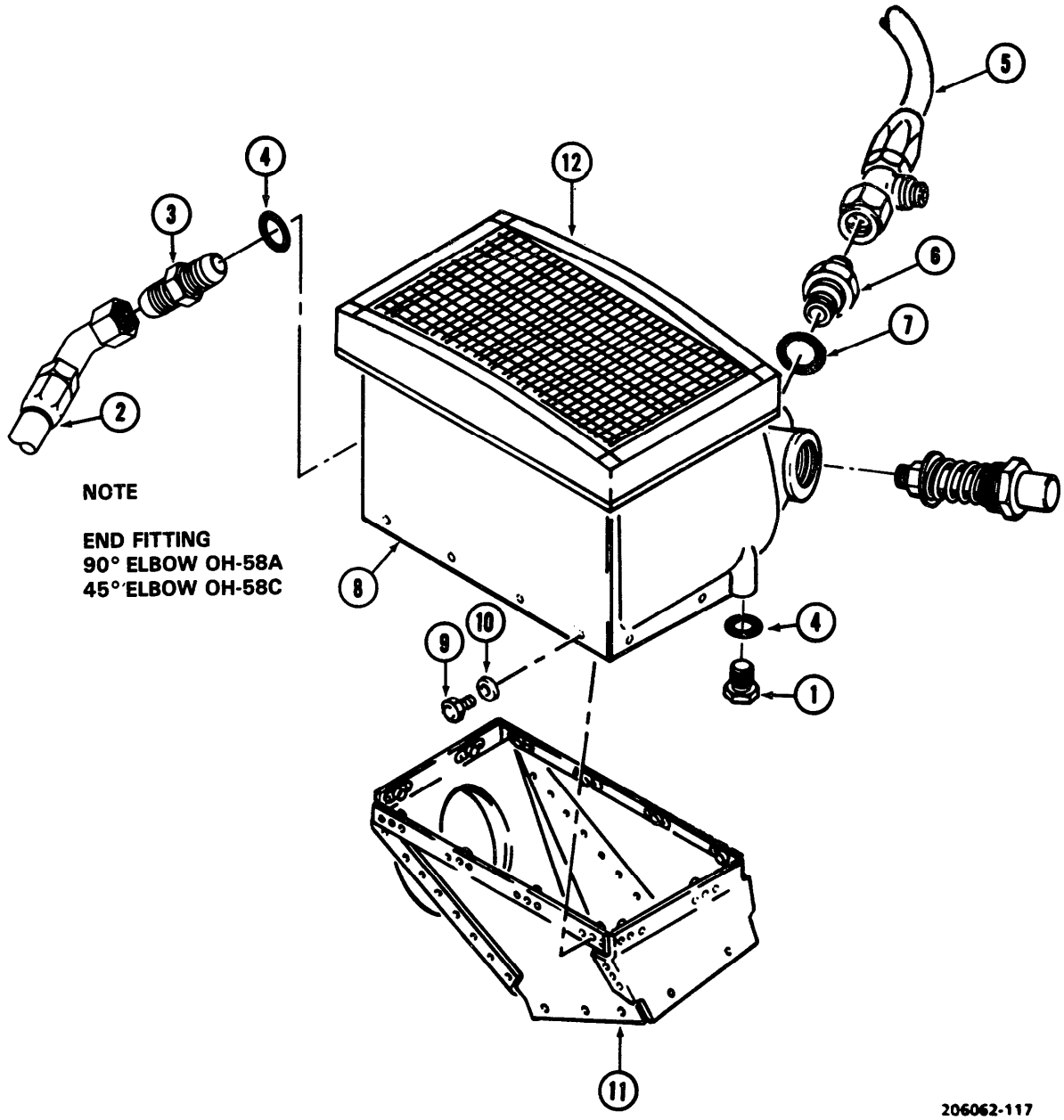

1. Drain Plug
2. Inlet Line
3. Reducer
4. Packing
5. Return Line
6. Check Valve
7. Packing
8. Oil Cooler
9. Bolt
10. Washer
11. Duct
12. Gasket

Figure 4-14. Engine Oil Cooler

4-76. CLEANING — OIL COOLER.

CAUTION

Do not attempt to clean an oil cooler which has been installed with an engine which incurred mechanical failure resulting in metal particles in the oil. Condemn oil coolers which have been contaminated with metal particles.

NOTE

Do not confuse AOAP laboratory high wear concentration of iron, magnesium, etc., (measured in parts per million) as being metal chip contamination or metal particle contamination.

a. Install plugs in inlet and outlet ports of oil cooler (1, figure 4-15).

b. Install drain plug (4, figure 4-15) and vernatherm control valve (3) if not previously accomplished.

WARNING

Degreasing Solvent is combustible and toxic to eyes, skin, and respiratory tract. Wear protective gloves and goggles/face shield. Avoid repeated or prolonged contact. Use only in well-ventilated areas (or use approved respirator as determined by local safety/industrial hygiene personnel). Keep away from open flames or other sources of ignition.

c. Clean the exterior of the oil cooler with degreasing solvent (C62).

4-77. DISASSEMBLY — OIL COOLER.

a. Remove vernatherm control valve (3, figure 4-15). Do not disassemble valve. If valve is known to be faulty or fails to pass inspection at any point in subsequent procedures, replace the valve with a new valve. Discard packing (2).

b. Remove drain plug (4) and discard packing (5).

NOTE

Further disassembly is not practical because each core is a brazed and welded unit.

4-78. INSPECTION — OIL COOLER.

a. Inspect the air fins and air passages for distortion and foreign particles that may obstruct the air flow.

b. Inspect the cooler for damaged and bulged plates, cracked castings and flanges, broken welds, and stripped threads. If damage is suspected, refer to TM 1-1520-254-23, Technical Manual Aviation Unit Maintenance (AVUM) and Aviation Intermediate Maintenance (AVIM) Manual Nondestructive Inspection Procedures for OH-58 Helicopter Series.

c. Inspect for foreign matter inside cooler through four open ports.

d. Inspect area around each of four ports for scoring that could prevent packings from sealing.

e. Inspect the seat on vernatherm control valve (3, figure 4-15) and the mating seat in the oil cooler for rough surfaces that would allow excessive leakage when the valve is seated.

f. Inspect vernatherm control valve (3) for damaged threads and broken spring.

g. Test venatherm control valve as follows:

(1) Submerge valve in water heated to **160° (±5°)F (71°C)** for **5** minutes. Remove and measure length.

(2) Submerge valve in water heated to **178° (±5°)F (81°C)** for **5** minutes. Remove valve and measure length.

(3) The minimum increased length between the two measurements must be **0.080** inch. If valve does not pass this inspection replace it with valve which will pass inspection.

4-79. ASSEMBLY — OIL COOLER.

a. Install vernatherm control valve (3, figure 4-15) with new packing (2). Lockwire (C96) valve.

b. Install drain plug (4) with new packing (5). Lockwire (C96) plug.

c. Install check valve (6, figure 4-14) and new packing (7) in the return port.

4-80. INSTALLATION — OIL COOLER.

a. Position cooler (8, figure 4-14) on duct (11) with inlet port on right side.

b. Align mounting holes and install 13 bolts (9) and washers (10).

c. Install reducer (3) and new packing (4) in the inlet port.

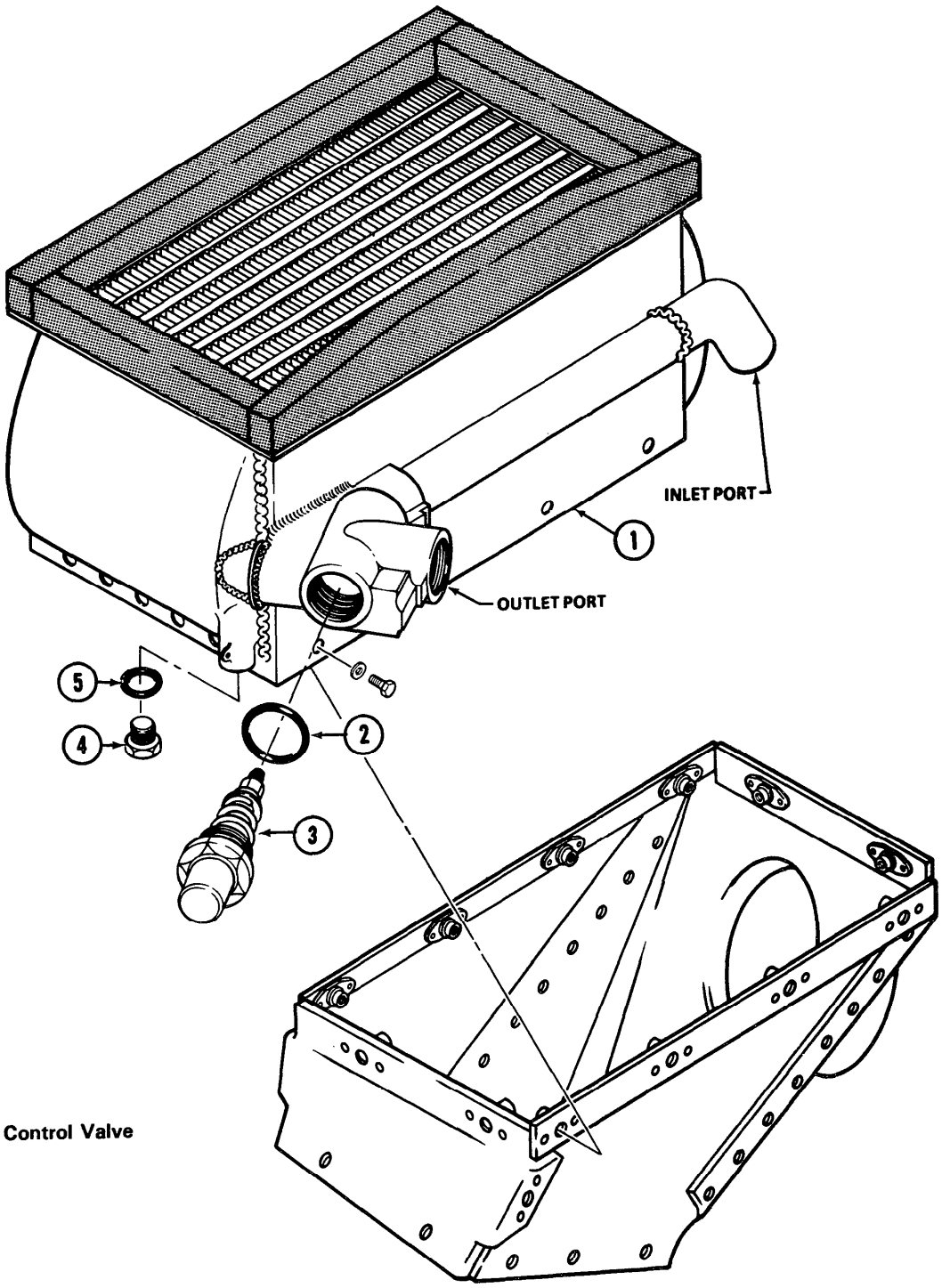

1. Oil Cooler
2. Packing
3. Vernatherm Control Valve
4. Drain Plug
5. Packing

206062-121

Figure 4-15. Oil Cooler Assembly

d. Connect inlet line (2) and return line (5).

e. Ensure that drain plug (1) is installed and lockwired (C96).

f. Service system.

4-81. OIL SELECTOR (BYPASS) VALVE.

4-82. DESCRIPTION — OIL SELECTOR (BYPASS) VALVE. The oil selector (bypass) valve (11, figure 4-13) is mounted on the rear firewall, right side and either direct soil from engine to oil cooler in normal operation or directs oil from engine straight to oil tank when level drops to 1.100 gallons in oil tank. This prevents total oil loss due to oil cooler damage.

4-83. CLEANING — OIL SELECTOR (BYPASS) VALVE.

WARNING

Degreasing Solvent is combustible and toxic to eyes, skin, and respiratory tract. Wear protective gloves and goggles/face shield. Avoid repeated or prolonged contact. Use only in well-ventilated areas (or use approved respirator as determined by local safety/industrial hygiene personnel). Keep away from open flames or other sources of ignition.

a. Clean actuator assembly (2, figure 4-16) with clean cloth moistened with degreasing solvent (C62).

WARNING

Degreasing Solvent is combustible and toxic to eyes, skin, and respiratory tract. Wear protective gloves and goggles/face shield. Avoid repeated or prolonged contact. Use only in well-ventilated areas (or use approved respirator as determined by local safety/industrial hygiene personnel). Keep away from open flames or other sources of ignition.

b. Clean parts other than actuator assembly by washing in degreasing solvent (C62). Dry parts with a clean, lint-free cloth.

4-84. INSPECTION — OIL SELECTOR (BYPASS) VALVE.

a. Inspect fittings and threads for damage and serviceability.

b. After installation, check for leaks and security of attachment.

4-85. TEST — OIL SELECTOR (BYPASS) VALVE.

a. With engine oil tank empty and ENG OIL switch in the AUTO position and ENG OIL BYPASS circuit breaker engaged, observe that ENG OIL BYPASS warning light is illuminated when power is applied.

b. Place ENG OIL switch OFF and listen for audible valve actuation.

c. Place ENG OIL switch to AUTO and listen for audible valve actuation.

d. Begin filling engine oil tank and observe that ENG OIL BYPASS warning light extinguishes and an audible valve operation is heard when approximately 1.100 gallons of oil have been loaded.

e. Run engine and observe that ENG OIL BYPASS light is not illuminated and that engine oil temperature is stabilized. Oil will bypass the oil cooler below **71°C** due to the vernatherm control valve.

f. Place ENG OIL switch to AUTO A .

g. Note engine oil temperature, then place CAUTION TEST/RESET switch to TEST. Hold in TEST position until a **10°C** rise in engine oil temperature is noted. (This indicates the selector valve is in bypass.) A .

h. Place ENG OIL switch to OFF and note that oil temperature returns to original value. A .

4-86. REMOVAL — OIL SELECTOR (BYPASS) VALVE.

a. Remove the inlet (23, figure 4-13) and outlet lines (14 and 22) at selector (bypass) valve ends.

b. Remove B nut attaching valve to firewall.

c. Remove electrical connections and remove valve.

d. Remove fittings (5, 10, and 17, figure 4-16).

4-87. DISASSEMBLY — OIL SELECTOR (BYPASS) VALVE. (AVIM)

a. Remove nameplate (1), (figure 4-16).

b. Remove screws (3) and actuator assembly (2) from valve body (12).

c. If installed, remove fittings (5, 10, and 17). Discard packings.

d. Align shaft (19) so that lower shaft key is straight between port C and B.

e. Press out seal (7 or 15) and ball (13) from valve body. Discard packings.

f. Remove shaft (19) from valve body. Remove packing (21) and discard.

4-88. INSPECTION — OIL SELECTOR (BYPASS) VALVE. (AVIM)

a. Inspect all parts for cracks, breaks, and signs of obvious damage or wear. If crack is suspected, refer to TM 1-1520-254-23, Technical Manual Aviation Unit Maintenance (AVUM) and Aviation Intermediate Maintenance (AVIM) Manual Nondestructive Inspection Procedures for OH-58 Helicopter Series.

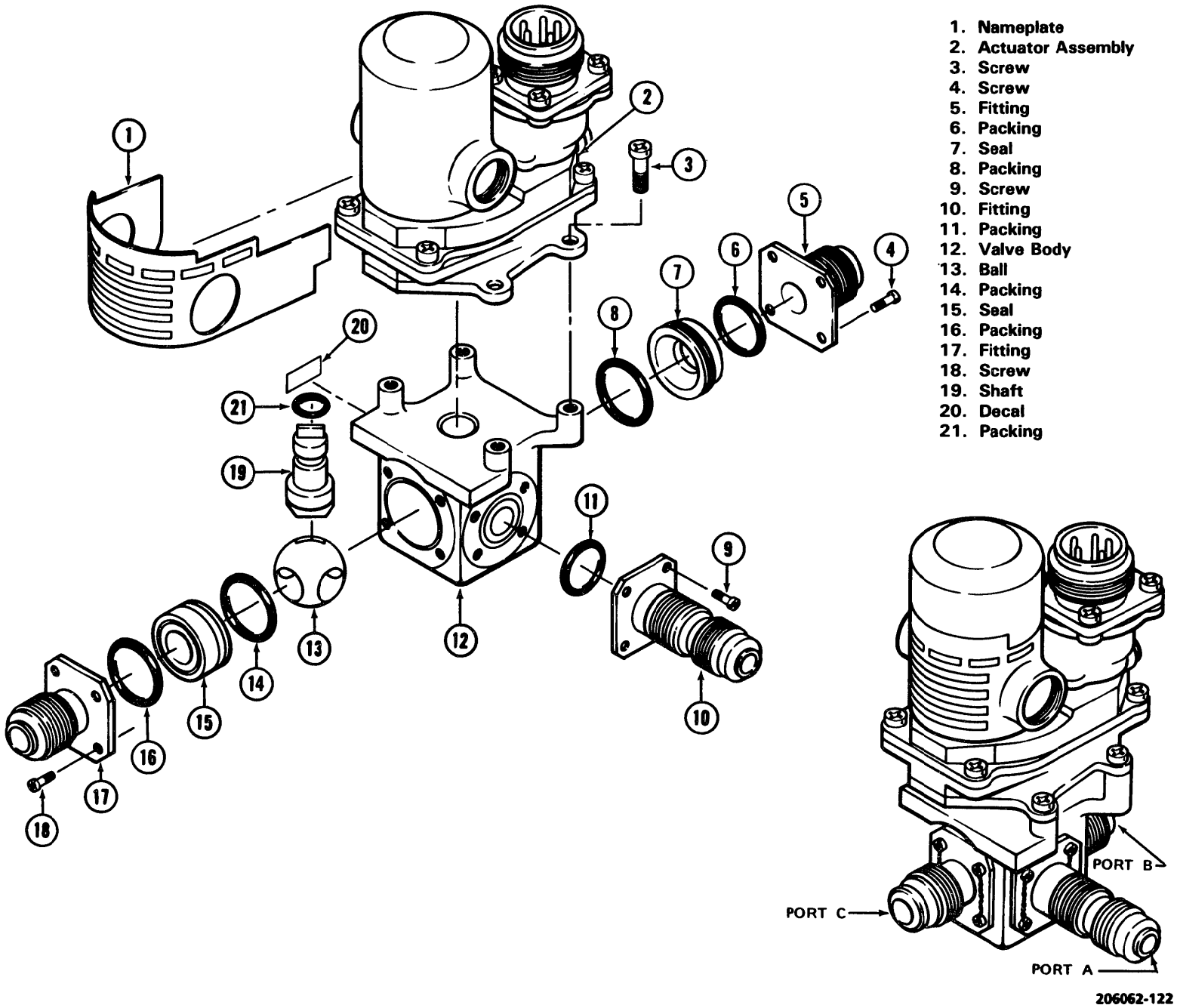

Figure 4-16. Selector Valve Assembly (Engine Oil System Bypass Valve)

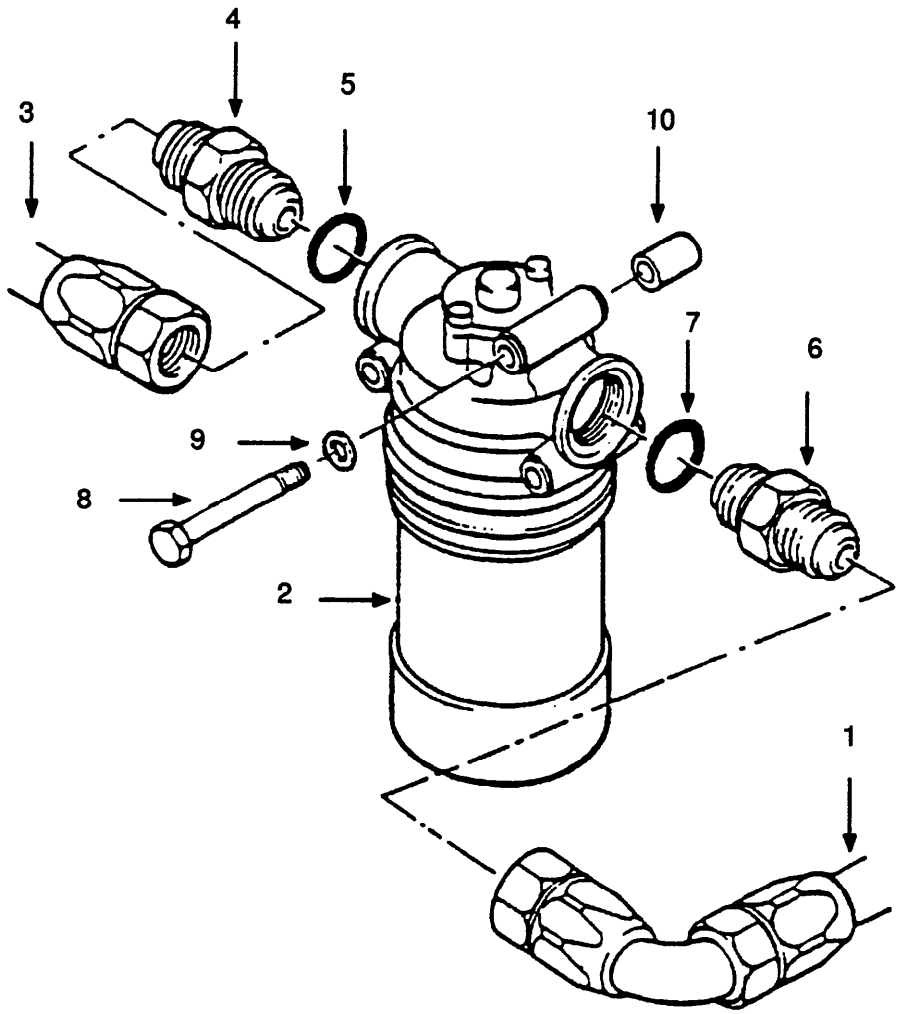

1. Inlet Hose
2. Filter Assembly
3. Outlet Hose
4. Fitting
5. Preformed Packing
6. Reducer Fitting
7. Preformed Packing
8. Bolt
9. Washer
10. Spacer

Figure 4-16.1. External Scavenge Oil Filter Assembly.

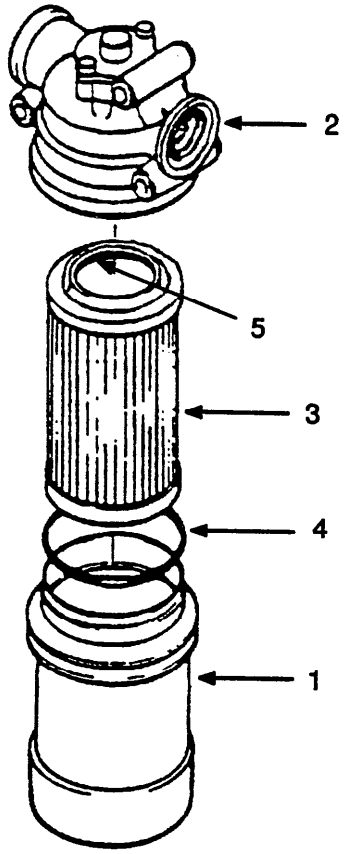

1. Filter Bowl
2. Filter Head
3. Filter Element
4. Preformed Packing
5. Preformed Packing

Figure 4-16.2. External Scavenge Oil Filter Element

b. Inspect seals (7 and 15, figure 4-16) for scoring and scratches which could cause leakage.

c. Inspect ball (13) for scoring and scratches which could cause leakage.

d. Inspect valve body (12) for cracks, burrs, and obstructed passages. If crack in valve body is suspected, refer to TM 1-1520-254-23, Technical Manual Aviation Unit Maintenance (AVUM) and Aviation Intermediate Maintenance (AVIM) Manual Nondestructive Inspection Procedures for OH-58 Helicopter Series.

4-89. REPAIR — OIL SELECTOR (BYPASS) VALVE. (AVIM) Repair of oil selector (bypass) valve is limited to removal and replacement of authorized parts as outlined in TM 55-1520-228-23P.

4-90. ASSEMBLY — OIL SELECTOR (BYPASS) VALVE. (AVIM)

a. Place seals (7 and 15, figure 4-16) and new packings (6, 8, 11, 14, 16, and 21) on clean, wax-free paper. Lubricate these parts with a light film of silicone grease (C81).

b. Install packing (21) in shaft (19) and install shaft in valve body (12) through port B or port C.

c. Install ball (13) into valve body (12) through port B or port C and engage tang of shaft (19) in slot in ball.

d. Install new packing (8) on seal (7). Install new packing (14) on seal (15). Position seals in valve body and push seals in until they contact ball.

e. Install serviceable mount fittings (5, 10 and 17) with new packings (6, 11, and 16) on valve body in positions illustrated. Secure fittings with screws (4, 9, and 18) and lockwire (C96) screws.

f. Position acutator assembly (2) on valve body (12). Rotate shaft (19) if necessary to engage slot in output shaft of actuator assembly (2). Install screws (3) and lockwire (C96).

g. Install nameplate (1).

h. If a new valve body (12) was installed, stamp port locations (A, B, and C, figure 4-16) on the upper side of the body with permanent ink (C85).

4-91. INSTALLATION — OIL SELECTOR (BYPASS) VALVE.

a. If not installed, install serviceable mount fittings (5, 10, and 17, figure 4-16) and new packings (6, 11, and 16) on valve body in positions illustrated. Secure fittings with screws (4, 9, and 18) and lockwire (C96) screws.

b. Position valve in firewall and secure with washers and hex nuts.

c. Connect electrical connector and three lines to valve and install lockwire (C96).

4-92. OIL SUPPLY SYSTEM HOSES, FITTINGS, AND TUBING.

The hoses and tubing used in the oil supply system are light-weight assemblies incorporating permanent fittings. The hoses located near the engine are provided with fire shields. The oil cooler bypass line is of aluminum construction.

4-93. INSPECTION — OIL SUPPLY SYSTEM HOSES, FITTINGS, AND TUBING.

a. Inspect oil lines for kinks, uniformity of diameter, breaks, and freedom from interference with adjoining structure or other components. Replace defective oil lines.

b. Inspect fittings and hardware for cracks, crossed threads, obstructions in opening, burrs, or other damage. If crack is suspected, refer to TM 1-1520-254-23, Technical Manual Aviation Unit Maintenance (AVUM) and Aviation Intermediate Maintenance (AVIM) Manual Nondestructive Inspection Procedures for OH-58 Helicopter Series.

4-94. REPAIR/REPLACEMENT — OIL SUPPLY SYSTEM HOSES, FITTINGS, AND TUBING. Replace all damaged fittings. Replace all seals, packings, self-locking nuts, cotter pins, and lockwire when they are removed from a unit.

4-95. INTERSYSTEM OIL LEAKAGE.

4-96. DESCRIPTION — INTERSYSTEM OIL LEAKAGE. Occasionally, intersystem oil leakage may occur internally between the freewheeling assembly and engine oil systems through the accessory gearbox shaft seals. Evidence of this is a high engine oil level coupled with a low transmission oil level.

4-97. INSPECTION — INTERSYSTEM OIL LEAKAGE. Check Engine and Transmission oil levels.

4-98. REPAIR/REPLACEMENT — INTERSYSTEM OIL LEAKAGE.

a. Remove freewheeling unit from gearbox. Refer to paragraph 6-25.

CAUTION

Do not pry between seal cavity in the gearbox housing and seal. Be careful not to damage the gearshaft or contaminate the shaft bearings.

b. Remove both accessory gearbox seals, one from both ends using seal replacement kit (6796941).

This is the preferred method of seal removal. An alternate method of seal removal is to drill three holes into the metal portion of the seal, then after removing chips, shavings, etc., install sheet metal screws in each hole with washers. Seal may now be pried from the housing utilizing a wooden block and a suitable pry bar inserted under the washers, alternately prying at each screw location.

CAUTION

If using the alternate method of seal removal, mark drill bit to drill no deeper than .010 inch. Mark sheet metals screw for no more then 0.20 inch penetration to keep from damaging underlying bearing.

c. Inspect driveshaft sealing surface for burrs, scratches, sharp edges, etc., which would damage sealing lips.

NOTE

Install replacement seal. Refer to TM 55-2840-241-23P

d. Inspect replacement seals for condition. Ensure seal lips are not chipped, torn, or grooved.

e. Apply light film of grease (C78) to seal lips to aid installation. Ensure secondary sealing surface is inserted into gearbox first, metal surface outboard, then carefully drive (or press) replacement seal in place. When installing the double lip seal that has the rubber backing, install with rubber surface outboard.

f. Reinstall freewheeling unit. Refer to paragraph 6-33.

4-98.1. EXTERNAL SCAVENGE OIL FILTER ASSEMBLY. After compliance of MWO 1-1520-228-50-44.

4-98.2. DESCRIPTION — EXTERNAL SCAVENGE OIL FILTER ASSEMBLY. The external scavenge oil filter is mounted above the tail rotor driveshaft, behind the engine oil tank. The in-line oil filter consists of a 3 micron filter element, oil bypass indicator, and bypass valve. When the filter element becomes cogged, it will give a warning by extending the bypass (red) indicator. The indicator extends when a set differential pressure across the filter is exceeded. When in the reset position, the indicator will be hidden from view.

4-98.3. INSPECTION — EXTERNAL SCAVENGE OIL FILTER ASSEMBLY.

a. Inspect filter assembly for security, condition, leaks, damaged fittings, or broken lockwire.

b. Inspect hoses for kinks, chafing, and condition. Replace defective hoses.

NOTE

If filter bypass indicator (red button) is showing, reset indicator, ground run engine, and reinspect. If indicator is not showing after ground run, aircraft may be released for operation. If indicator is showing after ground run, change engine oil, and replace scavenge filter element.

c. Check for extended oil bypass (red) indicator. If indicator is extended, reset by pressing in.

4-98.4. REMOVAL — EXTERNAL SCAVENGE OIL FILTER ASSEMBLY.

CAUTION

Protective covers shall be used to cover all open ports and lines to prevent contamination by entry of foreign material.

a. Remove aft fairing (5, Figure 2-10 or 10, Figure 2-11). Place suitable container under scupper drain of aircraft.

b. Remove hose (1, Figure 4-16.1) from inlet side of filter assembly (2).

c. Remove hose (3) from outlet side of filter assembly (2).

d. If necessary, remove reducer (4) and packing (5) from outlet side of filter assembly (2). Discard packing (5).

e. If necessary, remove reducer (6) and packing (7) from inlet side of filter assembly (2). Discard packing (7).

f. Remove filter assembly (2) by removing 3 bolts (8), 3 washers (9), and 3 spacers (10).

4-98.5. CLEANING — EXTERNAL SCAVENGE OIL FILTER ASSEMBLY.

WARNING

Degreasing Solvent is combustible and toxic to eyes, skin, and respiratory tract. Wear protective gloves and goggles/face shield. Avoid repeated or prolonged contact. Use only in well-ventilated areas (or use approved respirator as determined by local safety/industrial hygiene personnel). Keep away from open flames or other sources of ignition.

Clean exterior of oil filter assembly (Figure 4-16.1) with degreasing solvent (C62).

4-98.6. REPAIR — EXTERNAL SCAVENGE OIL FILTER ASSEMBLY.

a. Replace oil filter assembly (2, Figure 4-16.1) if damage or corrosion exists.

b. Replace oil filter element (3, Figure 4-16.2) if unserviceable or damaged. Refer to paragraph 4-98.10.

4-98.7. INSTALLATION — EXTERNAL SCAVENGE OIL FILTER ASSEMBLY.

NOTE

All preformed packings shall be coated with lubricating oil (C103 of C103.1).

a. Install filter assembly (2, Figure 4-16.1) with 3 bolts (8), 3 washers (9), and 3 spacers (10).

b. If removed, install reducer (6) with new preformed packing (7) coated with lubricating oil (C103 or C103.1) on inlet side of filter assembly (2).

c. If removed, install reducer (4) with new preformed packing coated with lubricating oil (C103 or C103.1) on outlet side of filter assembly (2).

d. Install hose (3) on outlet side of filter assembly (2).

e. Install hose (1) on inlet side of filter assembly (2).

f. Service oil tank if necessary.

g. Perform Maintenance Operational Check and leak check external filter assembly.

h. Reinstall aft fairing (5, Figure 2-10) or (10, Figure 2-11).

4-98.8. REMOVAL — EXTERNAL SCAVENGE OIL FILTER ELEMENT.

CAUTION

Protective covers shall be used to cover all open ports and lines to prevent contamination by entry of foreign materials.

a. Remove aft fairing (5, Figure 2-10 or 10, Figure 2-11).

b. Place suitable container under scupper drain of aircraft, cutlockwire and remove filter bowl (1, Figure 4-16.2) from filter head (2).

c. Remove filter element (3) from filter bowl (1). Inspect per paragraph 4-98.9. Discard filter element (3).

d. Remove preformed packing (4) from filter bowl (1). Discard preformed packing (4).

WARNING

Degreasing Solvent is combustible and toxic to eyes, skin, and respiratory tract. Wear protective gloves and goggles/face shield. Avoid repeated or prolonged contact. Use only in well-ventilated areas (or use approved respirator as determined by local safety/industrial hygiene personnel). Keep away from open flames or other sources of ignition.

e. Clean inside of filter bowl (1) using degreasing solvent (C62) and wiping rags (C119.1).

4-98.9. INSPECTION — EXTERNAL SCAVENGE OIL FILTER ELEMENT.

Inspect oil filter element (3, Figure 4-16.2) for contamination to determine if any corrective action is needed beyond replacement of element or preformed packings.

4-98.10. REPLACEMENT/INSTALLATION — EXTERNAL SCAVENGE OIL FILTER ELEMENT.

NOTE

All preformed packings shall be coated with lubricating oil (C103 or C103.1).

a. Coat performed packing (5, Figure 4-16.2) in new filter element (3) with lubricating oil (C103 or C103.1).

b. Install filter element (3) in filter bowl (1).

c. Coat preformed packing (4) with lubricating oil (C103 or C103.1) and install in filter bowl (1).

d. Install filter bowl (1) into filter head (2) and hand tighten. Secure with lockwire (C96).

e. Service oil tank if necessary.

f. Perform Maintenance Operational Check and leak check external filter assembly.

g. Reinstall aft fairing (5, Figure 2-10 or 10, Figure 2-11).

SECTION VI. IGNITION SYSTEM

(Refer to Chapter 9)

SECTION VII. POWER CONTROLS

4-99. POWER CONTROLS.

4-100. DESCRIPTION — POWER CONTROLS. Helicopter uses a conventional control system. Collective pitch of the helicopter rotor establishes power output demand on the engine. For all practical purposes, helicopter rotor speed is held constant by the engine and it's control system.

The fuel control is connected to the twist grip of the pilot and copilot collective pitch sticks. The power turbine governor is interconnected to the collective pitch sticks through a coordinated systems of bell cranks and linkages. Any change in collective pitch resets the governor to a new power demand. This demand is transmitted to the gas producer fuel control, which resets and varies the N1 speed of the gas producer turbine accordingly.

A droop compensator maintains engine rpm (N2) as power demand is increased. The compensator is a direct mechanical linkage between the collective stick and the speed selector lever of the N2 governor. A torque tube has been incorporated with a shear center section to allow collective control in event of droop system failure.

A motor actuated speed trimming device is installed in the linkage between the collective pitch stick and the power turbine governor lever. It is operated by a beeping switch on the pilots collective pitch stick and allows engine output speed to be varied over the normal range.

4-101. INSPECTION — ACCEPTANCE/REJECTION CRITERIA — POWER CONTROLS.

a. Inspect for binding or chafing controls.

b. Inspect all cables, tubes, and bell cranks for security and cotter keys for proper installation.

c. Inspect torque tube assembly for dents, nicks, scratches, deformation, proper shimming, and loose or missing rivets. Refer to Figure 4-17 for limits. If either rivet is loose, replace both rivets.

(1) Ensure rivets are installed with a coat of wet zinc chromate primer (C118).

(2) Do not exceed diameter rivets.

d. Inspect rubber bellows for cracks or deterioration. Ensure inside is not gummy.

e. Inspect and replace any eroded, damaged, or worn parts of linkage. Replace rod end bearings if radial wear exceeds **0.010** and/or if axial wear exceeds **0.020** inches.

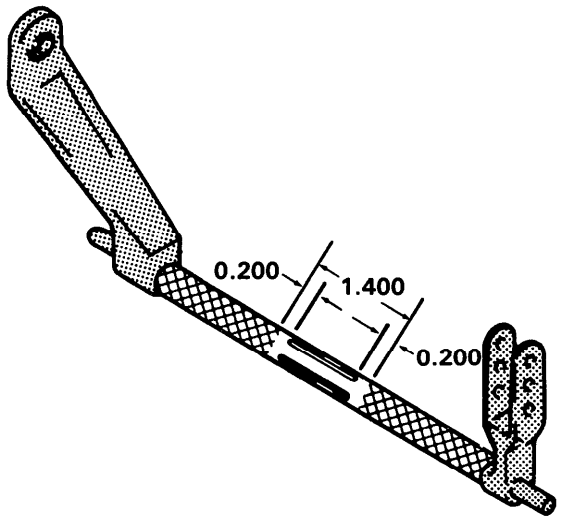

NOTE: All dimensions are in inches.

206062-123

AREA A	AREA B	AREA C
Area A to be free of dents and scratches, torque tube and/or torque tube assembly must be replaced when permanent deformation because of twist is visible in Area A.	Area B may have nicks and scratches a maximum depth of 0.035 inch and covering a maximum 0.100 square inch area.	Area C may have scratches a maximum depth of 0.010 inch and dents 0.030 inch deep with a maximum area of 0.100 inch square.

Figure 4-17. Power Control — Torque Tube Assembly Damage Limits

f. Inspect linkage at gas producer as follows:

(1) Inspect lever (4, figure 4-19) and link assembly (3) for elongation of holes and wear.

(2) Inspect bolt (7), washer (8), and nut (9) for erosion, damage, and wear.

g. Inspect tube (1, figure 4-20) for bends, dents, cracks, or missing rivets. Replace defective tube. If crack in tube is suspected, refer to TM 1-1520-254-23, Technical Manual Aviation Unit Maintenance (AVUM) and Aviation Intermediate Maintenance (AVIM) Manual Nondestructive Inspection Procedures for OH-58 Helicopter Series.

(1) Nicks, scratches, and pitting not to exceed **0.003** after cleanup (no area limit).

(2) Smooth dents not to exceed **0.028** in depth and not to affect more than 1/4 circumference in any location.

h. Inspect N2 governor arm (6, figure 4-20) for the following:

(1) Inspect for cracks on clevis tangs. If crack in N2 governor arm is suspected, refer to TM 1-1520-254-23, Technical Manual Aviation Unit Maintenance (AVUM) and Aviation Intermediate Maintenance (AVIM) Manual Nondestructive Inspection Procedures for OH-58 Helicopter Series.

(2) Replace defective governor arm.

4-102. REMOVAL — CONTROL CABLE ASSEMBLY — POWER CONTROLS.

a. Gain access to right side of engine by opening hinged section of engine side cowling (7, figure 2-1).

b. Unsnap and remove right hand cover from upper cabin roof beam.

c. Remove cover assembly from center post and retain attaching hardware for reinstallation.

d. Remove pilots seat. Refer to paragraph 2-78.

e. Remove clamp (18, figure 4-18), nut (13), washer (19), spacer (20), and screw (21).

f. Remove clamp (22), nut (13), washer (19), and screw (23) from adapter bracket (24).

g. Remove clamp (25), washer (19), screw (26) and spacer (27).

h. Remove clamp (28) be removing existing hardware. Measure exposed threads between nut (11) and unthreaded area of throttle cable (54) to facilitate approximate position at installation.

NOTE

Use wrench to hold end of control cable when loosening or tightening jamnut.

i. Remove lockwire and loosen nut (11).

j. Disconnect rod end (6) by removing cotter pin (1), nut (2), washer (3), and bolt (5).

k. Using a tape measure, determine distance between bracket (12) and end of rod end (6) to facilitate approximate position at installation.

l. Remove ball joint (10), adapter (8), and rod end (6) as a unit from end of control cable. If balljoint (10) adapter (8), and rod end (6) are to be disassembled, measure overall length to facilitate approximate position of reassembly.

m. Loosen nut (16) and nuts (17). Remove inboard nuts (16 and 17) from control cable assembly (54) and slip cable outboard from bracket (12). Remove outboard nut (17) from cable.

n. Remove six clamps (29), nuts (13), washers (19), and screws (30) securing control cable assembly (54) to center post structure.

o. Remove clamp (31), nut (13), washer (19), spacer (32), and screw (33) from clamp (34) located in upper cabin roof beam area.

p. Remove clamp (36), nut (13), washer (19), and screw (30).

q. Remove lockwire (39) securing nuts (40 and 42) and loosen nuts.

r. Disconnect rod end (44) from bellcrank (45), cotter pin (46), nut (47), washer (48), and bolt (49).

s. Remove nut (40), ball joint (41), tube assembly (43), and rod end (44) as a unit from end of control cable assembly (54).

t. Remove boot (38) from control cable.

u. Remove aft two nuts (37) at engine fireshield. Remove control cable assembly from fireshield by pulling forward, then remove forward two nuts (37) from control cable assembly.

v. Route control cable assembly (54) through grommets (35) and other existing grommets and remove from helicopter.

4-102.1. ENGINE GAS PRODUCER CONTROLS INSTALLATION. This portion of the gas producer controls is located in the engine bay and mounted on the engine deck, just under the engine fuel control. The control bracket takes the input from the collective twist grip, through the control cable and translates the motion as an input to the engine fuel control.

4-102.2. GAS PRODUCER CONTROL BRACKET. This bracket functions as a support for the gas producer control tube and the rod end side of the gas producer control push-pull control cable assembly by means of the bellcrank, which is mounted on the bracket. The bracket translates horizontal movement of the cable to a vertical movement at the fuel control lever.

4-102.3. INSPECTION — GAS PRODUCER CONTROL BRACKET.

NOTE

There are several alternate bearings which may be used. If a teflon-lined bearing has been used, inspect for signs of possible contamination damage. Also, inspect bolt(s) for sign of turning in the bearing. This is not acceptable. Teflon is subject to damage by grease, oil, jet fuel, hydraulic fluids, etc. It is important to assure the teflon bearing is free to rotate. Refer to para 11-130.f. for data on "spinning-in" of bearings.

a. Inspect the bearing in the bracket (53, fig. 4-18) for condition and wear; the bearing must have freedom of movement (rotation) and its I.D. must be free from

wear and damage. Replace bearing if it is worn or damaged. (Note that the bearing is roll-staked in place.) If crack is suspected, refer to TM 1-1520-254-23, Technical Manual Aviation Unit Maintenance (AVUM) and Aviation Intermediate Maintenance (AVIM) Manual Nondestructive Inspection Procedures for OH-58 Helicopter Series.

b. Inspect the mating bolt for condition and wear; replace if the plating is worn. Replace any worn or damaged bolts. If crack in bolt is suspected, refer to TM 1-1520-254-23, Technical Manual Aviation Unit Maintenance (AVUM) and Aviation Intermediate Maintenance (AVIM) Manual Nondestructive Inspection Procedures for OH-58 Helicopter Series.

4-102.4. GAS PRODUCER CONTROL BELLCRANK. The I.D. which mates with the bolt (11, fig. 4-19) is a relatively loose fit; the critical points to check are the bolt holes which mate with the AN173 series bolt.

NOTE

If a teflon lined bearing was used in the gas producer bracket, there is a possibility the bellcrank may be turning on the bolt. This is not acceptable.

4-102.5. INSPECTION — GAS PRODUCER CONTROL BELLCRANK.

a. Inspect the bellcrank bolt holes for wear and condition. If crack in bellcrank bolt holes is suspected, refer to TM 1-1520-254-23, Technical Manual Aviation Unit Maintenance (AVUM) and Aviation Intermediate Maintenance (AVIM) Manual Nondestructive Inspection Procedures for OH-58 Helicopter Series.

NOTE

Pay particular attention to the bolt holes which mate with the AN173 and AN174 bolts.

b. Inspect all bolts for condition and wear; replace any worn bolts. If crack in bolt is suspected, refer to TM 1-1520-254-23, Technical Manual Aviation Unit Maintenance (AVUM) and Aviation Intermediate Maintenance (AVIM) Manual Nondestructive Inspection Procedures for OH-58 Helicopter Series.

4-102.6. GAS PRODUCER CONTROL TUBE. This tube assembly takes the output from the control cable (through the bellcrank) and inputs the control motion to the engine fuel control lever which is mounted on the fuel control.

4-102.7. INSPECTION — GAS PRODUCER CONTROL TUBE.

a. Inspect the rod end bearings (44 and 55, fig. 4-18) for wear, condition, and freedom of motion. Replace any worn/defective bearings. If crack in rod end is suspected, refer to TM 1-1520-254-23, Technical Manual Aviation Unit Maintenance (AVUM) and Aviation Intermediate Maintenance (AVIM) Manual Nondestructive Inspection Procedures for OH-58 Helicopter Series.

b. Inspect rod end bearings I.D. for condition and wear.

c. Inspect the tube-fixed end bolt hole for condition and wear. Replace any tube assembly if the part is worn. If crack in bolt hole is suspected, refer to TM 1-1520-254-23, Technical Manual Aviation Unit Maintenance (AVUM) and Aviation Intermediate Maintenance (AVIM) Manual Nondestructive Inspection Procedures for OH-58 Helicopter Series.

d. Inspect mating bolts for condition and wear; replace any worn bolts. If crack in bolt is suspected, refer to TM 1-1520-254-23, Technical Manual Aviation Unit Maintenance (AVUM) and Aviation Intermediate Maintenance (AVIM) Manual Nondestructive Inspection Procedures for OH-58 Helicopter Series.

e. Inspect connecting link (43) for damage and cracks. If cracks are suspected, refer to TM 1-1520-254-23, Technical Manual Aviation Unit Maintenance (AVUM) and Aviation Intermediate Maintenance (AVIM) Manual Nondestructive Inspection Procedures for OH-58 Helicopter Series.

4-102.8. FUEL CONTROL LEVER.

The (airframe) engine fuel control lever is mounted on the fuel control and has serrations on the fuel control. The fuel control lever is the "throttle" lever for the fuel control.

4-102.9. INSPECTION — FUEL CONTROL LEVER.

a. Inspect the fuel control lever for condition and wear; replace if worn. If crack in fuel control lever is suspected, refer to TM 1-1520-254-23, Technical Manual Aviation Unit Maintenance (AVUM) and Aviation Intermediate Maintenance (AVIM) Manual Nondestructive Inspection Procedures for OH-58 Helicopter Series.

b. Inspect the AN173 series bolt which mates with the tube for condition and wear. Replace if the plating is worn. If crack in AN173 series bolt is suspected, refer to TM 1-1520-254-23, Technical Manual Aviation Unit Maintenance (AVUM) and Aviation Intermediate Maintenance (AVIM) Manual Nondestructive Inspection Procedures for OH-58 Helicopter Series.

4-102.10. BALLJOINT CONNECTOR — POWER CONTROLS.

4-102.11. DESCRIPTION — BALLJOINT CONNECTOR. On either end of the Gas Producer Controls Installation Cable Assembly is a Balljoint Connector. The Balljoint Connector has been installed to provide for some degree of misalignment from the easily curved flex cable to the rigid attach point at each end. For design purposes the Balljoint Connector provides ±4 degrees of movement, but has a total movement capability about its theoretical center of translation of ±8 degrees. To accommodate the movement, the Balljoint Connector incorporates two internal curved surfaces (at either end) and an internal ball. This ball and its two mating concave surfaces provides the means for an otherwise rigid end to have a degree of flexibility. The design point at manufacture/assembly is for a movement capability of 0.005 inches maximum under a ±5 lb. load.

4-102.12. INSPECTION — BALLJOINT CONNECTOR — POWER CONTROLS.

a. Disconnect the Gas Producer Controls Cable (54, figure 4-18) at the rod end at the bellcrank (45) located on the engine deck so that the cable is free to operate under no load.

b. Position one person at the collective stick twist grip. Slowly operate the twist grip back and forth and check that the internal portions of the Balljoint Connector (41) are not excessively worn.

c. What should be expected is a movement at the rod end and no slop in the Balljoint (41). Slowly rotate the collective twist grip in both directions and verify there is no lost motion due to the Balljoint (41) mechanism.

d. Check for wear and/or slop of the Balljoint Connector (10) at the pilot's collective stick (4) side of the system.

e. Slowly rotate the twist grip in both directions and check that no linear motion is "lost" due to wear in the Balljoint (10).

f. Internal wear of the Balljoint Connector is indicated by cable mechanism movement, but no immediate translation effect at the output side. This is more readily detected by quickly moving the twist grip back and forth. What will be occurring is the internal looseness or wear at the concave portions of the assembly where they mate against the internal ball.

g. Adjust the Balljoint if required as follows:

(1) Disassemble the Balljoint. Inspect both sides of the internal portions for condition and wear, where they mate against the ball. Inspect the ball for condition and wear.

(2) No obvious flat spots should exist on any of the surfaces of either the ball and/or its two end-mating surfaces. These surfaces should be smooth and free from surface defects which would prevent smooth operation.

(3) If no wear is present, reassemble the Balljoint. Tighten the assembly until there is no free play. Verify elimination of free play by holding the wrench-flat side fixed and then push in and pull out at the threaded side.

(4) Inspect that the threaded side still has freedom of movement about its linear axis. Specifically, the assembly must not be tightened against the ball. There should be at least ±4 degrees of angular movement. There should be no evidence of the internal ball binding.

4-102.13. REPAIR — BALLJOINT CONNECTOR — POWER CONTROLS. No repair is allowed. Replace the Balljoint Connectors (10 or 41, figure 4-18) if defective.

4-103. INSTALLATION — CONTROL CABLE ASSEMBLY — POWER CONTROLS.

CAUTION

Ensure cable routing does not take sharp bends or twists during attaching clamp installations which will result in loss of freedom of cable operation. Do not bend to radius smaller than seven inches.

a. Position new power control cable assembly (54, figure 4-18) to helicopter ensuring proper routing through grommets (35) and other existing grommets on center post and upper cabin roof beam.

b. Install outboard nut (17) on power control cable assembly and insert assembly through bracket (12). Position cable end from bracket at the same distance predetermined in paragraph 4-102, step 4-102k. Do not tighten nuts at this time.

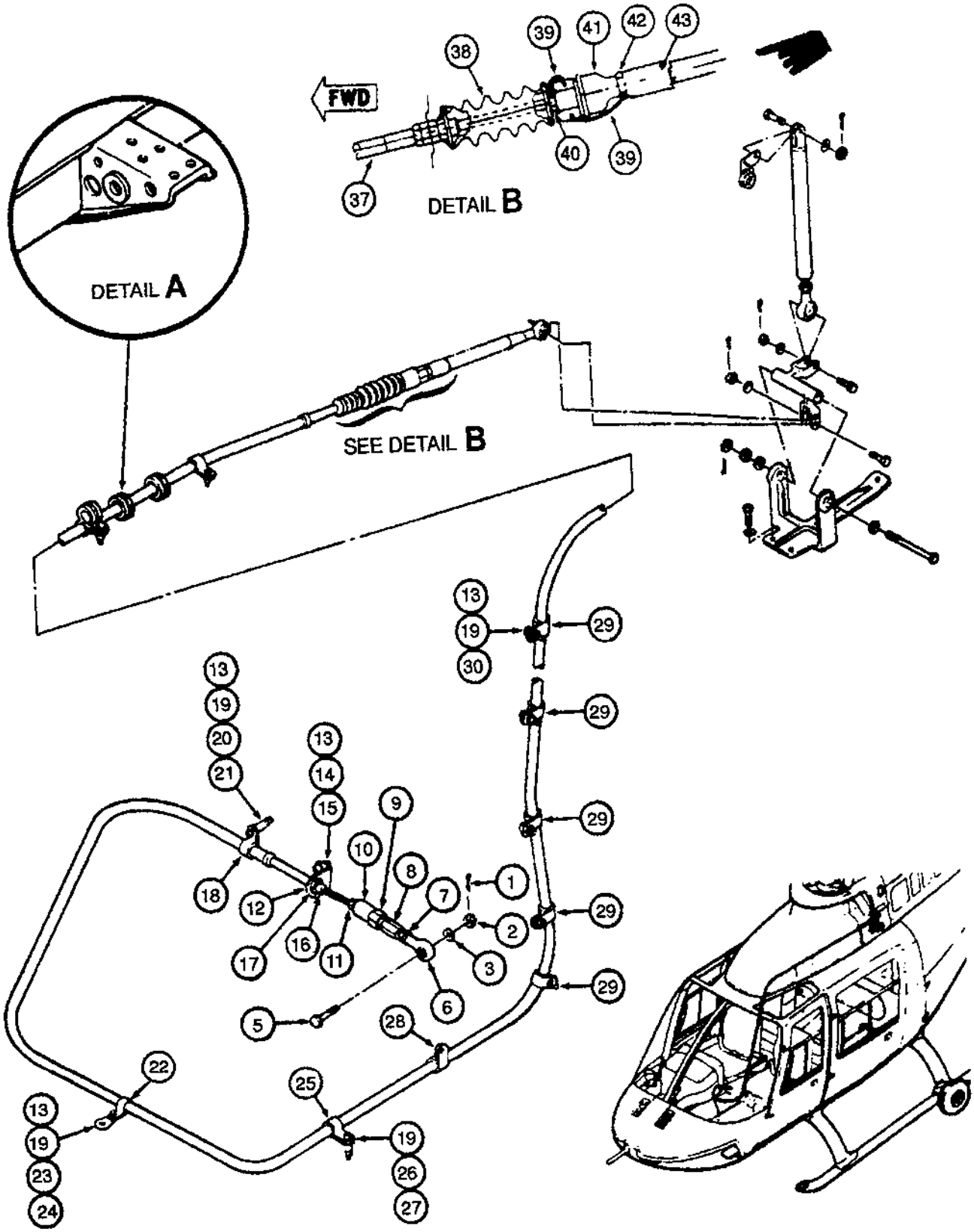

Figure 4-18. Gas Produce Control Installation (Sheet 1 of 3)

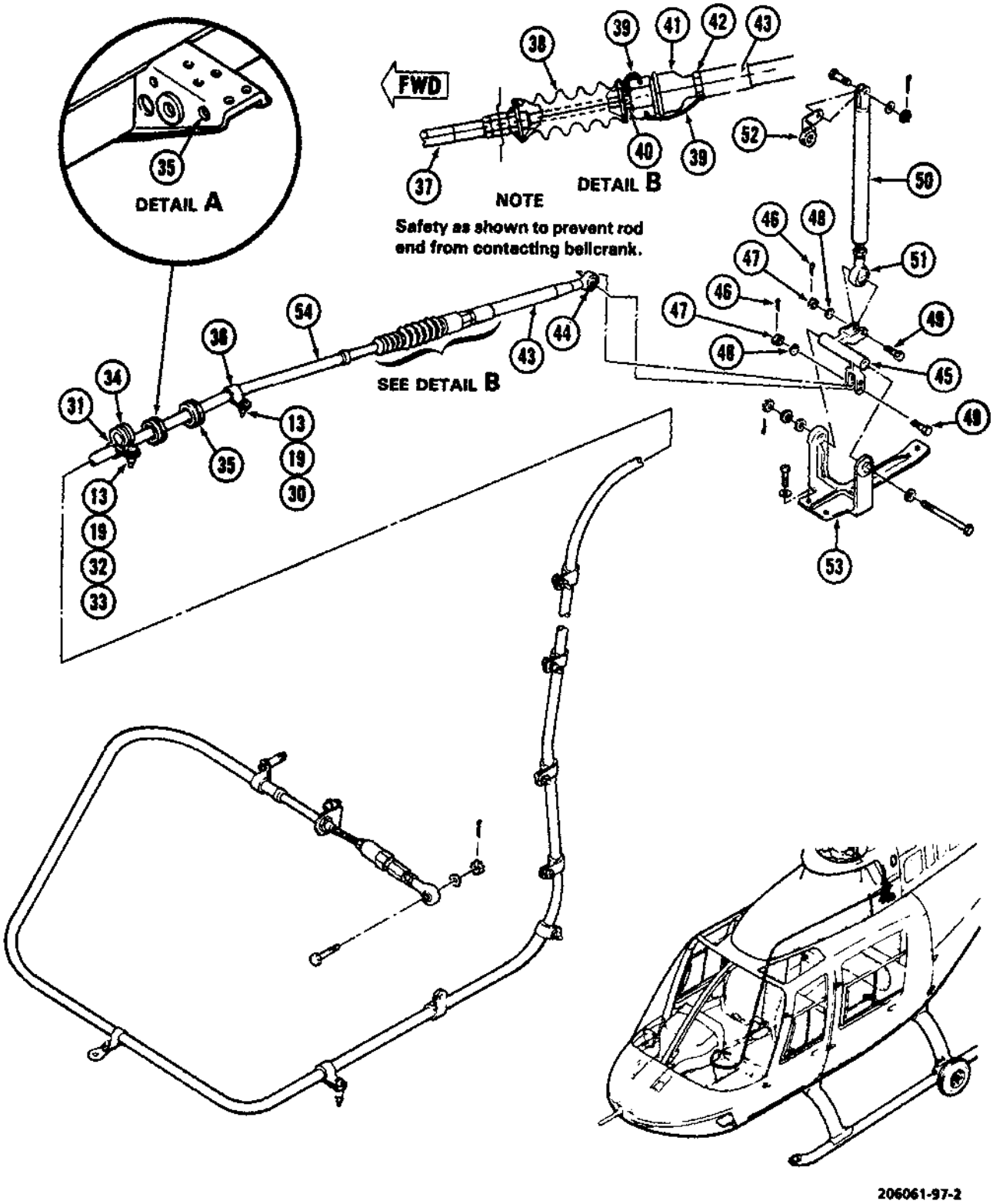

Figure 4-18. Gas Produce Control Installation (Sheet 2 of 3)

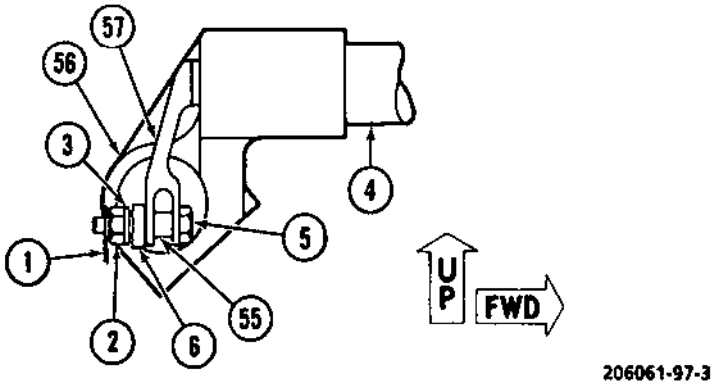

1. Cotter Pin
2. Nut
3. Washer
4. Pilot Collective Stick
5. Bolt
6. Rod End Bearing
7. Nut
8. Adapter
9. Nut
10. Balljoint Connector
11. Nut
12. Bracket
13. Nut
14. Washer
15. Screw
16. Seal Nut Assembly
17. Nut
18. Clamp
19. Washer
20. Spacer
21. Screw
22. Clamp
23. Screw
24. Adapter
25. Clamp
26. Screw
27. Spacer
28. Clamp
29. Clamp
30. Screw
31. Clamp
32. Spacer
33. Screw
34. Clamp
35. Grommet
36. Clamp
37. Nut
38. Boot
39. Lockwire
40. Nut
41. Balljoint Connector
42. Nut
43. Rigid Connecting Link
44. Rod End Bearing
45. Bellcrank
46. Cotter Pin
47. Nut
48. Washer
49. Bolt
50. Rigid Connecting Link
51. Rod End Bearing
52. Lever, Engine Control
53. Bracket
54. Control Cable Assembly
55. Copilot Throttle Control Linkage
56. Collective Jackshaft
57. Pilot Throttle Control Arm

Figure 4-18. Gas Produce Control Installation (Sheet 3 of 3)

NOTE

Seal nut assembly (16) has an interior felt seal/scraper. As a part of MWO 55-1620-228-50-26 the felt seal/scraper was removed and throttle friction sleeve P/N 206-064-714-101 installed. It is acceptable to use the original felt seal/scraper when the friction sleeve is not available. The seal nut assembly (16) must have provisions for lockwire. Locally drilled nuts are acceptable without regard to location and size of safety wire hole if function of nut is not impaired. Seal nut assembly shall be safe tied in accordance with TM 1-1500-204-23.

c. Install inboard nut (17) and nut (16). Do not tighten nuts at this time. If balljoint (10), adapter (8), and rod end (6) were disassembled, reassemble to previously recorded dimension. At least 1/4 inch of threads on balljoint (11) and rod end (6) must be engaged in adapter (8). Tighten nuts (7 and 9). Lockwire (C96) nuts (7 and 9) to adapter (8).

d. Install nut (11), balljoint (10), nut (19), adapter (8), nut (7), and rod end (6) of control cable. Assemble to previously recorded dimension. At least 1/4 inch of threads on cable end must be engaged in balljoint.

NOTE

Use wrench to hold end of control cable (54) when loosening or tightening jamnut.

e. Tighten nut (11) against balljoint (10) and lockwire (C96).

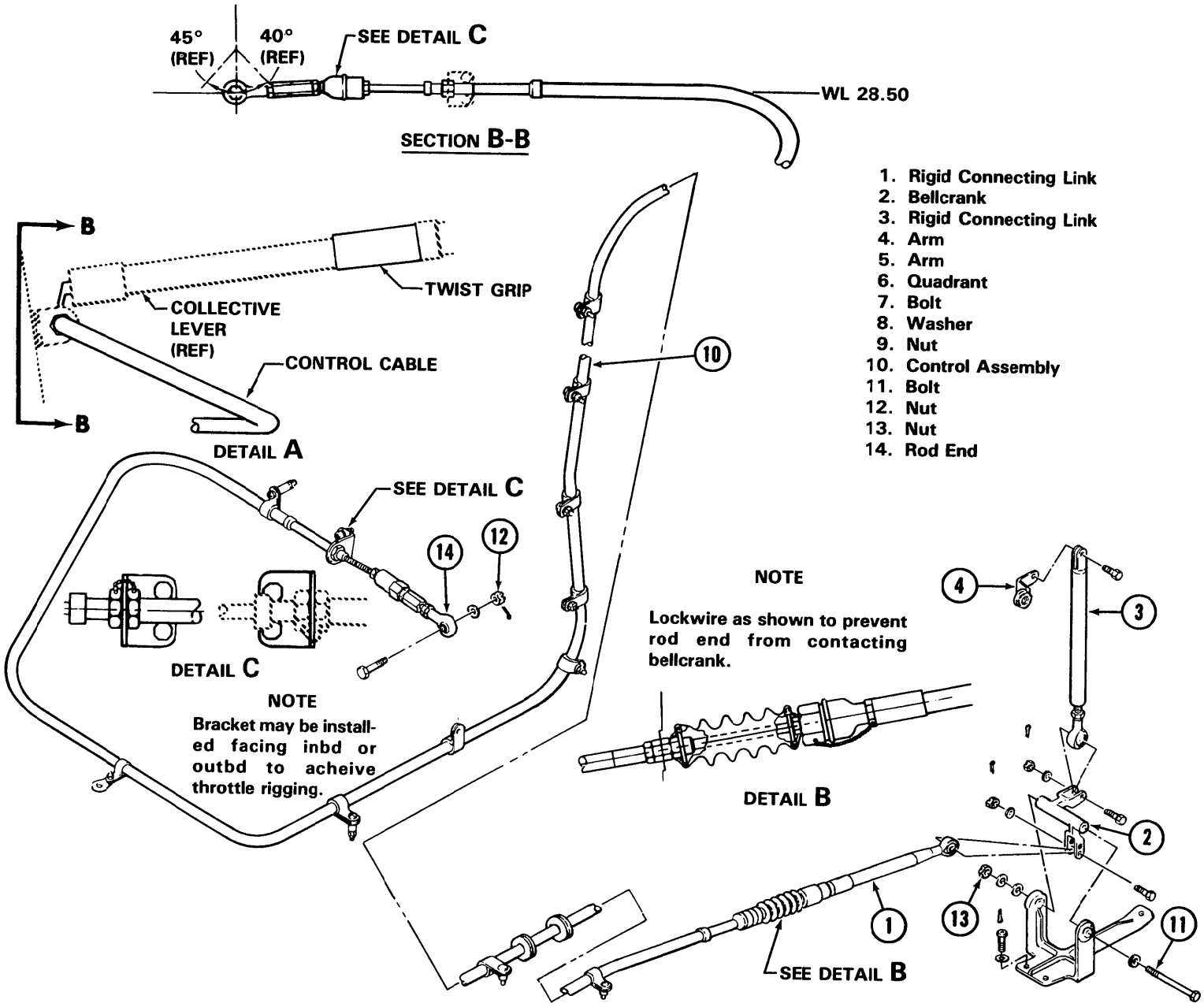

Figure 4-19. Power Controls — Gas Producer N1 (Sheet 1 of 2)

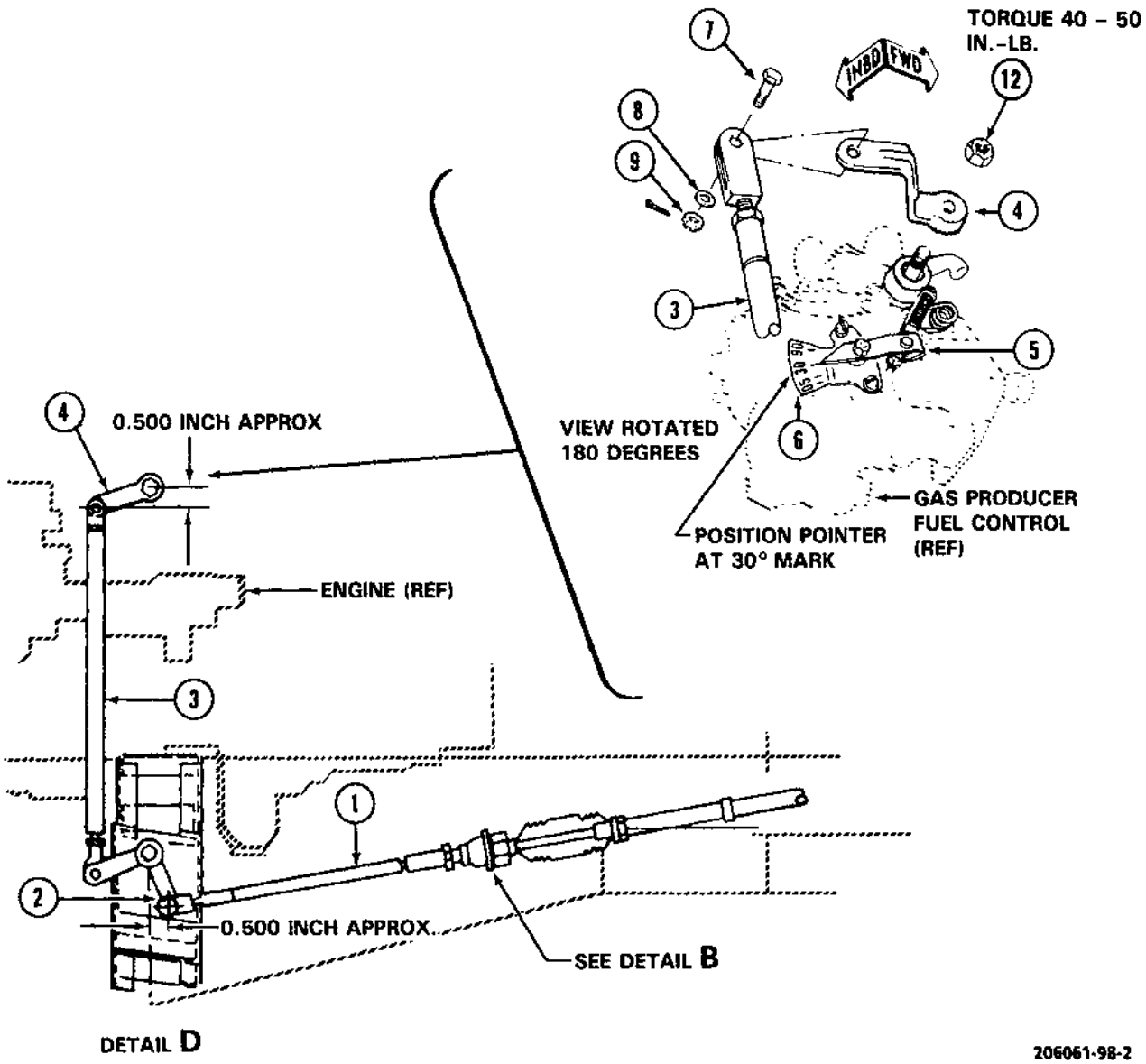

Figure 4-19. Power Controls — Gas Producer N1 (Sheet 2 of 2)

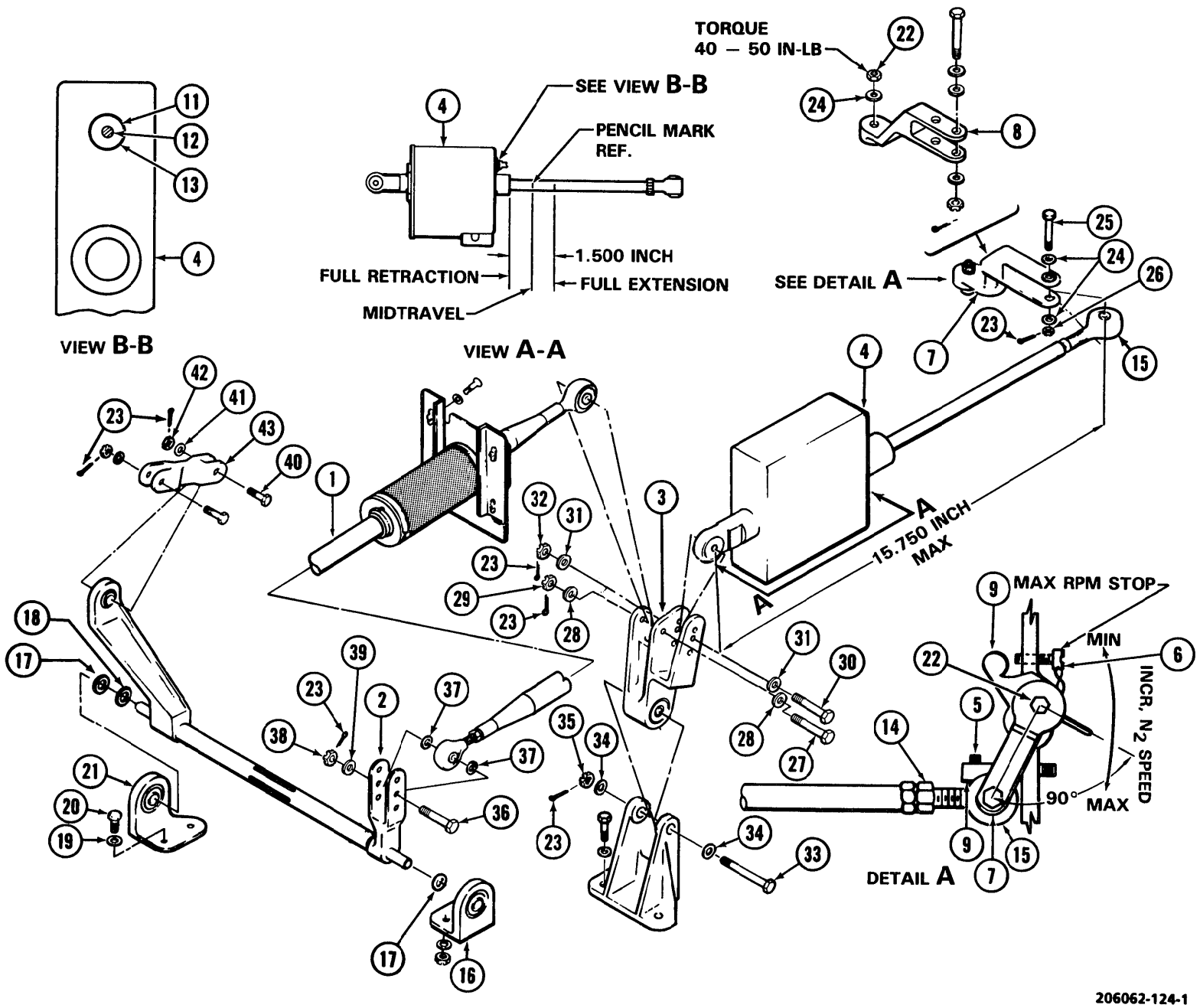

Figure 4-20. Power Controls — Droop Compensator N2 (Sheet 1 of 2)

1. Tube Assembly	11. Hex Nut	22. Nut	33. Bolt
2. Torque Tube Assembly	12. Slotted Adjusting Screw	23. Cotter Pin	34. Washer
3. Bellcrank	13. Washer	24. Washer	35. Nut
4. Linear Actuator	14. Jamnut	25. Bolt	36. Bolt
5. Stop Screw (Lower)	15. Rod End	26. Nut	37. Washers
6. Stop Screw (Top)	16. Bracket	27. Bolt	38. Nut
7. Governor Arm	17. Washer	28. Washer	39. Washer
8. Governor Arm (if installed)	18. Shim	29. Nut	40. Bolt
	19. Washer	30. Bolt	41. Washer
9. Stop Arm	20. Bolt	31. Washer	42. Nut
10. Eyebolt (if installed)	21. Bracket	32. Nut	43. Bellcrank

Figure 4-20. Power Controls — Droop Compensator N2 (Sheet 2 of 2)

NOTE

The following step will be performed after MWO 55-1520-228-50-26 has been accomplished.

f. Adjust screw (24, figure 11-1) to provide **0.750 TO 1.500 INCH-POUNDS** friction measured at the throttle twist grip.

g. Install copilot throttle control tube rod end (55, figure 4-18) in clevis of throttle arm (21, figure 11-1). Install bolt (5, figure 4-18) through throttle arm control tube rod end (55, figure 4-18) and control cable rod end (6). Secure with washer, nut (2), and cotter pin (1).

h. Tighten nuts (16 and 17) securing cable assembly to bracket (12) and lockwire (C96).

i. Install clamp (18) using nut (13), washer (19), spacer (20), and screw (21).

j. Install clamp (22) to adapter (24) using nut (13), washer (19), and screw (23).

k. Install clamp (25) using screw (26), washer (19), and spacer (27).

l. Install clamp (28) using existing hardware.

m. Install six clamps (29) securing control cable assembly (54) to center post using nuts (13), washers (19), and screws (30).

n. Install clamp (31) to clamp (34) using nut (13), washer (19), spacer (32), and screw (33).

o. Install clamp (36) using nut (13), washer (19), and screw (30).

p. Install forward two nuts (37) on cable assembly and insert cable through engine fireshield then install aft two nuts (37) on cable assembly. Tighten nuts.

q. Install boot (38) on control cable end.

r. Install nut (40), balljoint (41), nut (42), tube assembly (43), and rod end (44). At least 1/4 inch of threads on cable end must be engaged in balljoint.

NOTE

When installing bellcrank (2, figure 4-19) or (3, figure 4-20), tighten nut fingertight plus one castellation and install cotter pin. Check bellcrank for freedom of movement.

s. Position bellcrank (45) and throttle controls as described in paragraph 4-104.

t. Adjust tube assembly (43) if required to position rod end (44) in bellcrank (45). Check witness hole in the tube assembly for adequate thread engagement. Adjust rod end (6) or reposition other parts of the cable assembly if required to obtain correct location of rod end (44).

u. Torque nuts (40 and 42). Install lockwire (C96) from balljoint (41) to nut (42) and from balljoint (41) to nut (40) as shown in detail B of figure 4-18.

v. Install rod end (44) to bellcrank (45) using bolt (49), washer (48), and nut (47). Secure with cotter pin (46).

w. Check control cable assembly for satisfactory freedom of operation.

x. Tighten seal nut assembly (16). If friction sleeve is installed, tighten to obtain desired throttle friction. Lockwire (C96) nut assembly (16) to bracket (12) or nut (17).

y. Check both twist grips for satisfactory operation through full range.

z. Perform adjustment of gas producer (N1). Refer to paragraph 4-104.

aa. Install pilots seat. Refer to paragraph 2-88.

ab. Install center post cover assembly using retained hardware.

ac. Install right hand cover on upper cabin roof beam by snapping into place.

ad. Close hinged section of right hand engine side cowling (7, figure 2-1).

4-103.1. ADJUSTMENT — THROTTLE FRICTION AFTER MWO 55-1520-228-50-26.

NOTE

There are two ways to add throttle friction after MWO 55-1520-228-50-26. One is by torque of the nut, P/N 206-064-714-101, on gas producer cable which compresses a nylatron sleeve over the cable tube end; the other method is by use of the friction clamp, (26, figure 11-1), which adds friction to the throttle arm. These two function devices have been provided as part of the power droop kit to prevent inadvertent throttle roll off during engine power-on-operations. Note, that a one degree movement at the pilots twist grip will result in an approximate 30 horsepower change.

a. Initial friction will be added by torque of the nut, P/N 206-064-714-101, on the throttle cable.

b. If this does not provide enough system friction, tighten the screw on the friction clamp, (24, figure 11-1).

c. The nut be safe tied as in paragraph 4-103. The lockwire installs between the hole in the ball joint connection and the jam nut.

4-104. ADJUSTMENT — GAS PRODUCER (N1).

NOTE

When checking aircraft in service, rigging is acceptable if pointer is not more than 5/64 inch below the 30 degree mark.

Improper rigging will cause variations in engine speed at idle.

a. Rotate twist grip to full increase position and then back right to idle detent position. Maintain the twist grip in the idle position during accomplishment of the next two steps.

NOTE

Design of the idle detent button may allow the button to partially pop out. Continue turning twist grip open until button pops out all the way. Make all rigging adjustments using the pilot twist grip.

Rigid connecting link (1, figure 4-19) maybe connected to the upper hole in the bellcrank arm (2) if necessary for correct rigging.

b. Position bellcrank (2) as illustrated in figure 4-19, detail D, and connect rigid connecting link (1) to bellcrank (2). If control cable assembly (54, figure 4-18) requires adjustment, back off nut (7) and adjust rod end bearing (6). Use a wrench to hold control assembly adapter (8) when loosening or tightening nut. Recheck position of twist grip to assure grip is against idle detent stop, then check position of bellcrank (2, figure 4-19); install lockwire (C96) between nut (7, figure 4-18) and adapter (8). Install lockwire (C96) between nut (9) and adapter (8).

c. Set arm (5, figure 4-19) exactly at 30 degree position on quadrant (6), install arm (4) and position as illustrated in figure 4-19, detail D. Install nut (12) on lever and torque **40 to 60 inch-pounds.** Adjust connecting link (3) to correct length and connect to lever (4) with bolt (7), washers (8), and nut (9) inboard. Tighten nut (9) fingertight plus one castellation and install cotter pin.

d. Rotate pilot twist grip to full increase position. Check that fuel control lever is in firm contact with fuel control N1 maximum speed stop. Check that arm (4) does not contact throat of clevis on rigid connecting link (3).

e. Slowly rotate twist grip from full increase to idle detent position. The pointer on the fuel control quadrant must be exactly on the 30 degree mark for initial rigging setup. When checking aircraft in service, rigging is acceptable if pointer is no more than 5/64 inches below 30 degree mark.

f. Release idle detent and rotate twist grip to full closed position. Check that fuel control lever is in contact with fuel control minimum stop.

g. Slowly rotate twist grip from full closed to idle detent position. Check that pointer on fuel control quadrant is no more than 5/64 inches below the 30 degree mark.

NOTE

The copilot/observer twist grip does not have an idle detent stop and will normally give greater travel toward cut off when rotated to the idle stop position. This increased travel results from wear in the throttle control system and is aggravated by friction including that added by the throttle friction devices. If copilots twist grip will not achieve idle rigging tolerances, inspect for wear in system including arm (25, in figure 11-1) and associated parts in the pilot stick.

h. Check with copilot twist grip to assure that fuel control lever contacts both minimum and

maximum stops and that pointer on fuel control quadrant is no more than 5/64 inch below the 30 degree mark when copilot twist grip is rotated to idle detent from either the full increase or full closed position.

i. Rig the gas producer fuel control. Refer to TM 55-2840-241-23.

j. Check system for smoothness by turning pilots twist grip. If twist grip forces are considered objectionable by the pilot, the following twist grip force values may be used as a guideline.

(1) Primary Method: Attach a spring scale on the nut of the balljoint connector of the control cable at view BB, figure 4-19. Spring scale must be attached parallel to the control cable. Control cable is located under the seat at the base of the pilot collective stick. Force required to rotate pilots twist grip must not exceed **20** pounds breakaway from the full closed position. Force required after initial breakaway, to idle position will not exceed **11** pounds. After passing the idle position, force will not exceed **7** pounds throughout range to full open position. The operation will be smooth through the entire range.

(2) Alternate Method: Check twist grip forces by wrapping tape (C136), or equivalent about the pilot twist grip to prevent damage to cork, then wrap cord (C49), around grip in direction to increase throttle. Spiral the wrappings, except for the first several wrappings which will overlap to prevent slippage. Attach spring scale to looped end of cord and pull straight out to unwrap the cord, and advance the throttle. Maximum forces shall not exceed **30** pounds breakaway, **18** pounds from breakaway to detent position, and **12** pounds after passing idle position.

NOTE

If proper torque is not attainable, repeat system rigging procedure. Check throttle cable for sharp bends, or improper clamping.

Torque for twist grip will increase as temperatures decrease below 0°F (-18°C). Ensure that rubber boot (detail B, figure 4-19) is in good condition and that control assembly (10, figure 4-19) is clean. If the inside of the boot is deteriorated replace the boot.

k. Complete rigging check; refer to TM 55-2840-241-23. If rigging is not correct the control system must be inspected more thoroughly and corrective action taken. Inspect the control system in detail as follows:

(1) Inspect lever (4, figure 4-19), clevises on link (3), bellcrank (2), link (1), and all pins or bolts connecting them for wear. Replace all worn parts.

(2) Repeat paragraphs above to determine if looseness is within limits. If looseness exceeds the 5/64 inch limit on the indicator quadrant, remove pilots seat to inspect the control cable, rod end, pin, twist grip lever, and supporting clamps for wear or looseness which will result in lost motion in the control system. Replace parts which are worn excessively. Also inspect cable for freedom of operation. Check to be sure that cable is routed so it does not take sharp bends. If dual controls are installed, remove copilots seat also and inspect for wear in the N1 control system. Replace excessively worn parts.

NOTE

Make rigging adjustments using the pilots twist grip. Recheck the linkage movement using the copilot twist grip.

NOTE

Engine performance check is required for rigging adjustments of the fuel control.

l. Rig power turbine governor (N2) controls prior to performing the following checks and adjustments.

m. Perform idle speed check and adjustment in accordance with TM 55-2840-241-23. Gas producer (N1) speed must be between **62%-64%** N1 with generator switch OFF.

WARNING

Never attempt to adjust N1 idle speed by adjusting rigid connecting link (3, figure 4-19). Pointer must be at 30 degrees or within the specified limits. N1 idle speed must be adjusted by the idle speed adjusting screw. Failure to comply with this warning can result in an engine flame-out. Refer to TM 55-2840-241-23.

NOTE

Set idle speed at approximately 63% N1 to allow for seasonal temperature changes. Engine performance check is not required for idle speed adjustment. Dual control installation requires an idle speed check from the copilot side also. Idle speed must repeat.

n. Check idle speed with generator off.

4-105. ADJUSTMENT — POWER TURBINE GOVERNOR.

CAUTION

Adjustment of the power turbine governor controls is a critical flight safety task.55

NOTE

Rig collective pitch controls before rigging governor controls.

a. Disconnect rod end (5, figure 4-20) from lever.

b. Adjust tube assembly (1) to a length of **38.400** inches and install forward end (adjustable) in center hole of torque tube assembly (2). Firewall boot must be installed. Connect tube (1) to bellcrank (3).

c. Before connecting actuator to arm (7 or 8), check stroke of actuator for **1.500** inches travel from full retraction to full extension. (See view A-A.) If necessary adjust as follows:

NOTE

If the aircraft is equipped with actuator P/N 206-062-721-1 (vendor P/N 65A120) adjust according to par (1) through (3).

If the aircraft is equipped with actuator P/N 206-062-721-11 (vendor P/N 7185-1) adjust according to par (4) and (5).

The two actuators are sufficiently similar that the illustration in figure 4-20, view A-A and detail A may be used. View B-B and index items 11-13 apply only to the 206-062-721-1.

(1) Run actuator to approximately midpoint of travel. Failure to do this will damage the internal stops if the actuator screw (12) is adjusted.

NOTE

All adjustments to actuator stroke must be done with actuator at approximately the midpoint of travel. Adjusting screw (12) should not be allowed to rotate when nut (11) is loosened.

(2) Back off hex nut (11) and remove washer (13) from pin. Do not operate actuator with washer or nut removed.

(3) Turn adjusting screw (12) clockwise to increase travel and counterclockwise to decrease travel. Be sure to replace nut every time before checking travel of actuator stroke. Do not overtorque locknut. One full revolution of the slotted adjustment screw changes the stroke **0.114** inches in each direction. Adjust stroke to **1.500** inches from full retract to full extend.

(4) Run actuator to midpoint of travel. Do not make stroke adjustments when the actuator is at a limit position.

(5) Turn the 13/16 inch hex shaped extension on the actuator (largest hex on side of actuator where the smaller hex rod protrudes) clockwise to increase travel or counterclockwise to decrease travel. One full turn of the adjustment changes the stroke **0.083** inches. Adjust the stroke to **1.500** inches travel from full retract to full extend.

d. Install forward rod end of actuator (4) in center hole of bellcrank (3).

e. Install governor arm (7 or 8) on shaft approximately 90 degrees to centerline of indicator on stop arm (9) on the shaft. Install nut (22) on shaft end and torque **40 TO 50 INCH-POUNDS.**

CAUTION

To prevent internal damage to actuator (4) hold shaft motionless while turning jamnut (14) or rod end (15). Use a wrench at the end of the shaft. The 206-062-721-1 has wrench flats or a hex at the rod end of the shaft. The 206-062-721-11 has a hex shaped shaft.

f. Loosen jamnut (14) on actuator. Be sure to hold shaft when loosening jamnut. Move GOV RPM switch to DECR, fully extending actuator. Check length between centerlines of rod end holes for a maximum of 15.750 inches with actuator still unconnected to lever (7 or 8).

NOTE

Initially install rod end at outboard hole of arm.

g. Move collective stick to full up position and lock. Move GOV RPM switch to full INCR. Move arms (7 or 8 and 9) so that stop arm (9) is **0.010** inch from touching maximum RPM stop screw (6). Adjust rod end (15) to fit and temporarily install bolt (25), washers (24), nut (26) finger tight. Move collective to full down position and lock. Move GOV RPM switch to full DECR. Back out minimum rpm stop screw (5) and adjust to provide **0.010** inch minimum clearance from stop arm (9). There is no minimum rpm stop setting. The minimum rpm stop screw may be removed in order to obtain proper rigging clearances.

CAUTION

To prevent internal damage to linear actuator (4), hold shaft motionless while turning jamnut (14) or rod end (15). Excessive contact with governor minimum and maximum rpm stop will result in damage in the slotted area of torque tube (2).

NOTE

With collective controls full up or full down and with actuator at full increase or full decrease, actuator must contact its internal stops before governor stop arm (9) contacts maximum or minimum rpm stops. Ensure that 0.010 inch minimum clearance is maintained between the stop arm and the max stop screw. There is no maximum clearance from governor stops.

h. With actuator in full decrease, run engine with collective pitch in the full down position. Check minimum rpm for **98%** A , **95%** C with GOV RPM switch in DECR position and then check for **105%** A , **102%** C maximum with switch in INCR. Adjust if required by adjustment of the actuator stroke, and rod end, reference paragraph 4-105 a and f. One full turn of adjustment equals **1/2%** rpm change on each end (high and low) at the same time. One full turn of the rod end (15) equals **1/2%**rpm. Hold hex on shaft and tighten jamnut (14) after final adjustment. Inspect witness hole at shaft end for adequate thread engagement of rod end (15).

NOTE

For inspection purposes on operating aircraft, the aircraft is considered satisfactory for flight if the maximum N2 RPM available with the collective full down and linear actuator at maximum increase is 104% to 106% A or 101% to 103%. C .

i. If a condition occurs where **98% to 105%** A , **95% to 102%** C RPM is not attainable with the collective full down, it is permissible to adjust the maximum and/or minimum rpm stop. If the maximum rpm stop is contacted with the collective full down and with full increase, damage to the torque tube (2) will result when the collective is raised to the full up position. Therefore, rigging in accordance with step g. is very important. Maximum limit for increasing the maximum rpm stop screw is for the screw to be even with the governor housing.

NOTE

Normal operating speed of N2 is 103% A to 100% C . However, if the helicopter is flown to altitude the N2 will be noted to decrease. A minimum of 104% A , 101% C is required on the ground to permit the pilot to maintain 103%A 100% C as altitude increases. In addition approximately 1% decrease in N2 speed can occur due to changes in ambient temperatures. The purposes of rigging to 105% A 102% C is to assure the 104% A 101% C is available throughout the normal range of ambient conditions.

j. After final adjustments are complete, check maximum stop (6) and minimum stop (5) on governor for **0.010** inch minimum clearance. There is no maximum clearance.

(1) Secure governor stop (6) and bolt (10) with lockwire (C95).

(2) Install bolt (25), washers (24), nut (26), and tighten finger-tight plus one castellation, secure with cotter pin (23).

(3) Ensure rod end (15) is centered in governor arm (7 or 8) before securing jamnut (14).

(4) Eyebolt lower stop (10, figure 4-20) may be used on OH-58A but may be removed if necessary for rigging requirements. When the eyebolt is used, a jamnut (not illustrated) must be installed to secure lower stops (5 and 10). The eyebolt is not used on OH-58C. When the eyebolt is not installed a lower stop screw similar to the max stop screw (6) is installed.

NOTE

If further adjustment is required after maintenance operational check, perform procedures as outlined in paragraph 4-105, step c. Refer to TM 55-1500-328-25.

NOTE

Some governors recently overhauled may require the removal of bolt (8) and screw (5) to obtain 0.010 minimum clearance as specified in paragraph 4-105, step g.

4-106. ADJUSTMENT — DROOP COMPENSATION (N2). The N2 power turbine governor should maintain any selected speed throughout the collective travel range. In actual operation, N2 may temporarily overspeed or underspeed the rpm selected for a period of approximately two to five seconds, if the collective is moved abruptly. The twist grip should not normally be used to control overspeed except in case of fuel control or governor malfunction. If the rpm comes back to the previous setting, no adjustment is required; if not the droop compensation rate must be adjusted as follows:

NOTE

Droop due to improper adjustment of fuel control will not be corrected by droop compensation.

Since droop rate rigging may affect the rpm range and amount of contact with minimum and maximum rpm stops on the governor, these items must be inspected and adjusted if necessary after each droop rate adjustment.

For droop compensator system inspection criteria refer to para 4-101.

a. Underspeed when collective is raised and overspeed when collective is lowered. Move rod end (15) to inboard hole of arm (8). Recheck compensation. If this did not provide sufficient compensation, move forward end of tube assembly (1, figure 4-20) to upper hole in torque tube assembly (2). Install bolt (36), washers (37 and 39), nut (38) finger-tight plus one castellation and secure with cotter pin (23). Recheck for droop correlation. If this did not provide sufficient compensation, move forward end of linear actuator (4) into upper hole of bellcrank (3). Install bolt (30), washers (31), nut (32) finger-tight plus one castellation and secure with cotter pin (23). Repeat this procedure to check for correlation. If the above adjustments do not provide proper droop compensation, replace governor.

b. Overspeed when collective is raised and underspeed when collective is lowered. Move rod end (15, figure 4-20) to outboard hole of arm (8). Install bolts (36), washer (37 and 39), nut (38) finger-tight plus one castellation and secure with cotter pin (23). Recheck for droop correlation. If this did not provide sufficient compensation, move forward end of tube assembly (1) to lower hole in torque tube assembly (2). If this did not provide sufficient compensation, move forward end of linear actuator (4) into lower hole of bellcrank (3). Install bolt (30), washers (31), nut (32) finger-tight plus one castellation and secure with cotter pin (23). Repeat this procedure to check for correlation. If the above adjustments did not provide proper droop compensation, replace governor.

4-107. TROUBLESHOOTING — POWER CONTROLS. For troubleshooting, refer to TM 55-2840-241-23.

4-108. REMOVAL — POWER CONTROLS.

CAUTION

Do not twist power control cable in housing and do not remove cable from housing as this assembly will fall apart. Refer to figure 4-19.

a. Rigid cable and connecting link bellcranks are removed by removing attaching bolts and clamps.

b. Remove torque tube assembly (2, figure 4-20) as follows:

(1) Remove two bolts (20) and two washers (19) that attach bracket (21) to fuselage.

(2) Remove bracket (21), washer (17), and shim (18) from torque tube assembly (2).

(3) Remove torque tube assembly (2) with washer (17) from bracket (16).

(4) Remove washer (17) from torque tube assembly (2).

CAUTION

Any visible indication of fretting, corrosion or wear is cause for replacement of bolt (7 and 11, figure 4-19). Bolt (7) will be installed with head outboard to preclude chafing of oil hoses and tubing. Install nut (9) finger-tight plus one castellation, then install cotter pin. Install nut (13) on bolt (11) finger-tight.

NOTE

When installing bellcrank (3, figure 4-20), tighten nut finger-tight plus one castellation and install cotter pin. Check bellcrank for freedom of movement.

4-109. INSTALLATION — POWER CONTROLS.

a. Secure all tubes, cables, and bellcranks in position with proper bolts, nuts, clamps, and other necessary hardware.

b. Install torque tube assembly (2, figure 4-20) as follows:

(1) Install torque tube assembly (2) in bracket (16) with one washer (17).

(2) Install one washer (17) and bracket (21) on torque tube assembly (2).

(3) Temporarily install bracket (21) to fuselage with bolts (20) and washers (19).

(4) Slide torque tube assembly (2) toward bracket (16). Using a feeler gage, take a measurement of the amount of clearance (gap) between bearing in bracket (21) and washer (17).

CAUTION

Peel shim (18) must provide a clearance of 0.003 to 0.020 inch to provide freedom of movement of torque tube assembly.

(5) Obtain shim (18) that equals clearance measurement. Peel shim (18) to obtain a clearance of **0.003** to **0.020** inch to provide freedom of movement of the torque tube assembly (2) on final installation.

(6) Remove bolts (20) and washer (19) from fuselage to free bracket (21).

(7) Remove bracket (21) and washer (17) from torque tube assembly (2).

(8) Install previously fitted shim (18) and washer (17) on torque tube assembly (2).

(9) Install bellcrank (43) on torque tube (2), bolt (40), washer (41), nut (42) finger-tight plus one castellation and secure with cotter pin (23).

(10) Install bracket (21) on torque tube assembly (2). Secure bracket (21) to fuselage with bolts (20) and washers (19). Seal bracket (21) and bolts (20) with sealing compound (C130).

(11) Ensure a clearance of **0.003** to **0.020** is still present between washer (17) and bracket (21).

4-110. GOVERNOR CONTROL LINEAR ACTUATOR.

4-111. DESCRIPTION — GOVERNOR CONTROL LINEAR ACTUATOR. The linear actuator is a motor-actuated device operated by a GOV RPM (beeper) switch on the pilot collective stick and allows engine output speed to be varied over a normal range.

WARNING

Degreasing Solvent is combustible and toxic to eyes, skin, and respiratory tract. Wear protective gloves and goggles/face shield. Avoid repeated or prolonged contact. Use only in well-ventilated areas (or use approved respirator as determined by local safety/industrial hygiene personnel). Keep away from open flames or other sources of ignition.

NOTE

The linear actuator maintenance is limited in this section. For more complete instructions, refer to Chapter 9.

4-112. CLEANING — GOVERNOR CONTROL LINEAR ACTUATOR. Clean exterior surfaces with a clean, lint-free cloth dampened with degreasing solvent (C62).

4-113. INSPECTION — GOVERNOR CONTROL LINEAR ACTUATOR.

a. Inspect cover assembly visually for dents and scratches.

b. Inspect rod end bearings visually and manually for loose bearings refer to paragraph 9-93.

4-114. REMOVAL — GOVERNOR CONTROL LINEAR ACTUATOR.

a. Disconnect all electrical power from helicopter. Remove screw holding cover. Remove cover and disconnect electrical connectors from actuator. Protect ends of wires with electrical tape.

b. Remove cotter pins, nuts, and bolts from rod end bearings and remove actuator.

4-115. INSTALLATION — GOVERNOR CONTROL LINEAR ACTUATOR.

a. Install forward end of linear actuator (4, figure 4-20) into center hole of bellcrank (3). Install bolt (30), washers (31), nut (32) finger-tight plus one castellation and secure with cotter pin (23). Install linear actuator rod end (15) into governor arm (7), bolt (25), washers (24), nut (26) finger-tight plus one castellation and secure with cotter pin (23). Ensure rod end (15) is centered on governor arm (7).

b. Connect electrical wire connector and secure with washers and nut (not illustrated). Install protective cover with screw.

CHAPTER 5
SECTION I. ROTORS

5-1. MAIN ROTOR ASSEMBLY.

5-2. DESCRIPTION — MAIN ROTOR ASSEMBLY. The main rotor assembly is a two bladed, semi-rigid, seesaw type rotor with underslung mounting. The blades are mounted in the hub assembly grips with through bolts, which have hollow shanks for installation of weights to balance the hub. After balancing, the bolts must be kept with their respective rotor hub grips. Blade alignment is accomplished by adjustment of blade latches, which engage the root end of the blade. The blade grips are retained on the hub yoke by means of tension/torsion strap assemblies. Changes in blade pitch angle are made by turning the grips on the yoke; each grip has two pitch change bearings. Two types of hubs may be used; either oil or grease lubricated. With oil lubrication, oil reservoirs, with sight gages, are provided for pitch change bearings in the two grips and for two pillow block bearings utilized with the flapping axis trunnion. With grease lubrication, grease fitting and relief valves are used for the same purpose. The rotor blades are all metal, five piece assemblies consisting of an extruded aluminum alloy nose block, aluminum alloy trailing edge, and an aluminum honeycomb filler (figure 5-1).

5-3. OPERATIONAL CHECK — MAIN ROTOR ASSEMBLY. Maintenance operational checks shall be performed in accordance with TM 55-1520-228-MTF and TM 55-1500-328-25.

5-4. INSPECTION — MAIN ROTOR ASSEMBLY.

a. Visually inspect main rotor hub (figure 5-2) for cracks, nicks, scratches, and gouges. The main rotor hub is not serviceable if cracks are found. Using a flashlight, carefully inspect bottom of yoke assembly for cracking adjacent to trunnion bearing bores. Inspect for cracks between pillow block and T-handle work aid hole. Inspect pitch horns for cracking adjacent to trunnion bearings.

b. Inspect grip assemblies for cracks adjacent to outboard strap retention bolt. Visually inspect the visible outside surfaces of the grip tang blade bolt holes for cracks. Inspect pitch horn to grip retaining bolts for evidence of looseness.

c. Inspect main rotor retaining nut (2, figure 5-1), for damage and security in locking.

d. Inspect blade retention bolts (3) for visible damage, evidence of corrosion, and security of attachment.

e. Inspect grip seal areas for evidence of leakage. With oil lubricated hub some oil leakage is normal. Replace seals when loss of oil is equivalent to the amount in the reservoir sight glass for a two-hour flight duration.

f. With oil lubricated hub replace grip seal if no oil is visible in the grip sight glass reservoir after helicopter has not operated for a period of 24 hours. (Except for arctic operation.)

g. Inspect main rotor hub grip dust shield for deformities. Cracks may be repaired using sealing compound (C131). No other deformities allowed.

h. Inspect pillow block retention bolts for damage, evidence of corrosion, and security of mounting (movement of slippage marks).

i. Inspect the main rotor blades in accordance with paragraph 5-99.

NOTE

Any grease leakage other than weeping during high ambient temperatures or at the first run-up after servicing, is cause to replace the seals on the main rotor greaseable hub pillow blocks and/or grips.

5-5. TROUBLESHOOTING — MAIN ROTOR ASSEMBLY.

a. Refer to table 5-1 for troubleshooting procedures.

b. Refer to paragraphs 5-3, 5-4, 5-6, and 5-23 for specific testing and mechanical procedures for adjusting the main rotor.

NOTE

Before using table 5-1, ensure all normal operational checks have been performed. If a malfunction exists which is not listed in table 5-1, notify the next higher level of maintenance.

Table 5-1. Troubleshooting — Main Rotor Assembly

CONDITION

TEST OR INSPECTION

CORRECTIVE ACTION

1. Vertical 1:1 vibration increasing with airspeed (Approximately 6-1/2 per second).

STEP 1. Rotor blades out of track.

Check rotor blades tracking. Refer to AVA TM 1-6625-724-13&P

STEP 2. Check friction on swashplate uniball. Refer to paragraph 5-113.

Adjust swashplate friction. Refer to paragraph 5-113.

2. Lateral 1:1 vibration.

STEP 1. Spanwise unbalance (normally vibration increasing with rpm in hover).

Check for spanwise balance of main rotor. Refer to paragraph 5-6, step 5-6a. If static balance check becomes necessary, refer to paragraph 5-9.

STEP 2. Chordwise unbalance (normally vibrations increase).

Check for chordwise balance of main rotor. Refer to paragraph 5-6, step 5-6g. If static balance check becomes necessary, refer to paragraph 5-9.

STEP 3. End play in excess of **0.004** inch on main rotor trunnion. Refer to paragraph 5-6.

Adjust trunnion centering. Refer to paragraph 5-52.

STEP 4. Excessive wear and play in swashplate and support assembly. Refer to paragraph 5-112.

Replace swashplate and support assembly. Refer to paragraph 5-114 and 5-121.

3. 2/rev vibration (approximately 13 per second).

STEP 1. Check friction on swashplate uniball. Refer to paragraph 5-113.

Adjust swashplate friction. Refer to paragraph 5-113.

STEP 2. Check for excessively loose control linkage or swashplate parts. Refer to paragraph 5-156 and 5-112.

Adjust or replace control linkage. Refer to paragraph 5-48 and 5-155.

Replace swashplate parts. Refer to paragraph 5-118.

Table 5-1. Troubleshooting — Main Rotor Assembly — Continued

CONDITION

TEST OR INSPECTION

CORRECTIVE ACTION

STEP 3. Check for loose or improperly torqued tailboom attachment bolts. Refer to paragraph 2-377.

Retorque bolts 375 TO 415 INCH-POUNDS. Refer to paragraph 2-378.

STEP 4. Check for loose blade latch bolt/nuts. Refer to paragraph 5-57.

Retorque trailing edge latch nuts 75 TO 95 FOOT-POUNDS. Use care not to disturb blade alignment. Refer to paragraph 5-60.

STEP 5. Check for deteriorated or separated pylon isolation mount; also for worn transmission to isolation mount attachment bolt or bearing. Refer to paragraph 2-291 and 2-294.

Replace defective parts. Refer to paragraph 2-296.

4. Spike knocking.

STEP 1. Spike knocking will not be encountered in normal service with serviceable isolation mount except in cases of extremely rough air or excessively abrupt maneuvers. Spike knocking may be encountered in normal service if the isolation mount is deteriorated.

Replace isolation mount. Refer to paragraph 2-293 and 2-298.

5. Autorotation rpm high (low pitch setting on blades too low).

STEP 1. Pitch links too short. Refer to paragraphs 5-158 and AVA TM 1-6625-724-13&P.

Adjust pitch links. Refer to figure 5-52 and paragraphs 5-158 and AVA TM 1-6625-724-13&P.

6. Autorotation rpm low (low pitch setting on blades too high).

STEP 1. Pitch links too long. Refer to paragraphs 5-158 and AVA TM 1-6625-724-13&P.

Adjust pitch links. Refer to figure 5-52 and paragraphs 5-158 and AVA TM 1-6625-724-13&P.

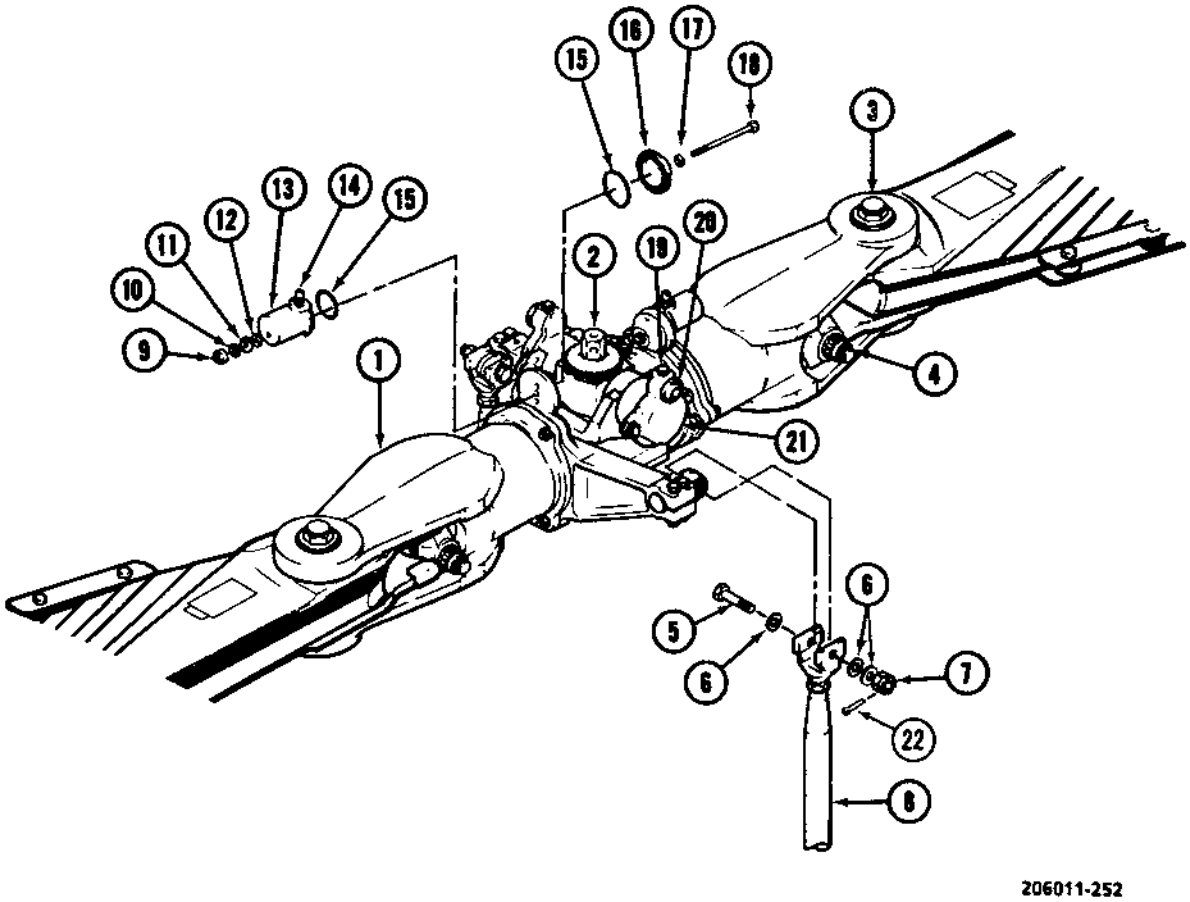

1.	M/R Hub and Blade Assembly	*12.	Packing
2.	M/R Mast Nut	*13.	Grip Reservoir
3.	Blade Bolt	*14.	Fitting
4.	Latch Nut	*15.	Packing
5.	Bolt	*16.	Sight Glass
6.	Washer	*17.	Packing
7.	Nut	*18.	Bolt
8.	Pitch Link Assembly	*19.	Plug
*9.	Nut	*20.	Sight, Plug
*10.	Spring Washer	21.	Pillow Block Housing
*11.	Washer	22.	Cotter Pin

* These Items are for oil lubricated hubs only. See figure 1-5, detail B and C.

Figure 5-1. Main Rotor Assembly (Typical)

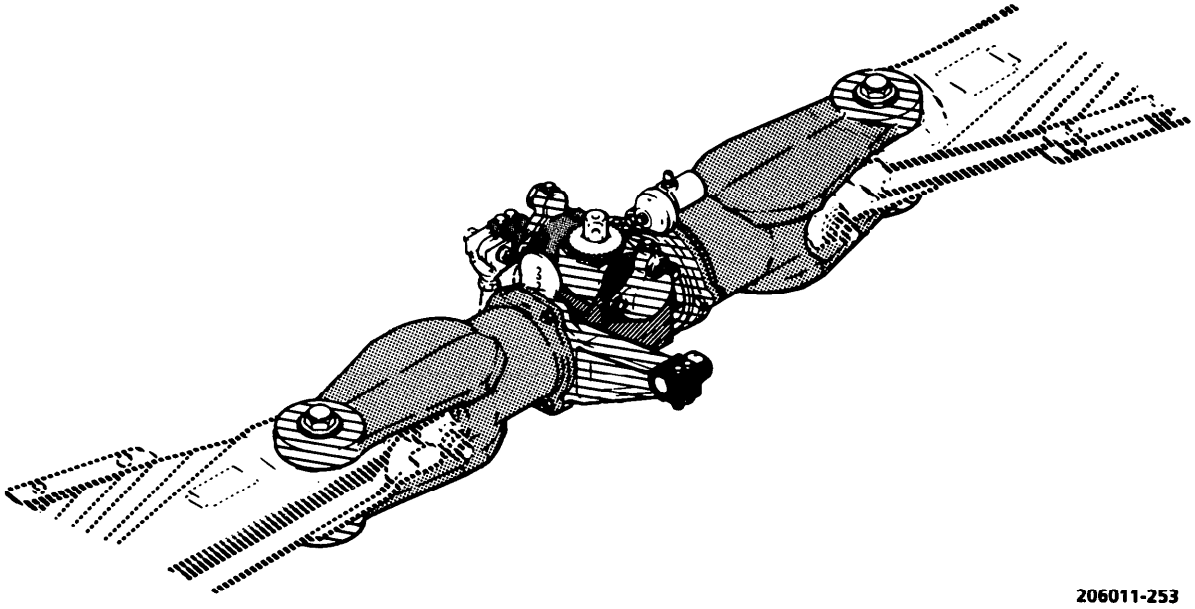

TYPE OF DAMAGE	AREA A	AREA B	AREA C	AREA D
	MAX DEPTH			
NICKS, SCRATCHES, SHARP DENTS	0.010	0.020	0.010	0.020

NOTES:

1. All dimensions are in inches.
2. Pitch horn limits are shown in figure 5-15.

Figure 5-2. Main Rotor Hub Surface Repair Limits

5-6. ALIGNMENT AND BALANCE — MAIN ROTOR ASSEMBLY (INSTALLED).

Premaintenance Requirements for Alignment and Balance of Main Rotor Assembly (Installed)

Condition	Requirements
Model	OH-58A and OH-58C
Part No. or Serial No.	All
Special Tools	None
Test Equipment	Protractor/straight edge feeler gage
Support Equipment	None
Minimum Personnel Required	One
Consumable Materials	(C115) (C120) (C102) (C96)
Special Environmental Conditions	None

CAUTION

Balance weights at the inboard trailing edge and at the leading edge tip caps must not be removed or changed in the .eld. Spanwise balance should be accomplished by addition of weights to the blade attach bolts.

NOTE

The need to spanwise balance main rotor blades will be indicated by a 1:1 lateral vibration. 1:1 vibrations are rpm sensitive, not airspeed sensitive.

a. To spanwise balance main rotor blades, add two wraps of one-inch tape on one blade at station 208.07. Refer to figure 5-32. (If lateral is mild, use one wrap.) If this is worse, remove the tape and put it on the opposite blade. Add tape in one wrap or 1/2 wrap increments until the smoothest high rpm level is reached. Recheck low rpm, **97% A**, **94% C** N2 rpm level.

NOTE

If the rotor cannot be balanced by use of tape, it is probable that the rotor is out of chordwise balance. Check chordwise balancing.

b. If rotor vibration was corrected by spanwise procedure, remove tape and install quantity of lead weight, equal to 10.8 times the weight of the tape, in the hollow shank of the appropriate blade bolt (3, figure 5-1).

NOTE

The amount of lead weight to be installed in the blade bolt to compensate for one wrap of one-inch wide masking tape is 28 grams or one ounce.

c. Carefully remove cap from blade bolt (3, figure 5-1), and place weight in blade bolt. Record the amount of weight added. Replace cap and operate helicopter at **103% A**, **100% C** N2 rpm to confirm that the correct amount of weight has been added.

d. Check main rotor trunnion for centering in the yoke, prior to sweeping blades. Position a combination square on bottom outboard edge of yoke parallel to chordwise axis. Take a feeler gage reading between blade of square and mast. Record reading. Take a similar reading from opposite side of yoke. If the reading indicates the trunnion is off center more than **0.003** inch, proceed to the following step.

e. Remove main rotor hub and blade assembly in accordance with paragraph 5-8.

CAUTION

Balance weights at the inboard trailing edge and at the leading edge tip caps must not be removed or changed in the field. Chordwise balance should be accomplished by aft sweep of the blade.

f. If centering of trunnion is required, refer to paragraph 5-48.

NOTE

Before sweeping a main rotor blade, loosen the nut on blade bolt (3, figure 5-1) to prevent binding. After blade has been swept, torque nuts 200 TO 220 FOOT-POUNDS plus drag torque valve.

g. If chordwise balance is required, as determined in preceding steps, sweep one blade slightly aft as follows:

CAUTION

Blade sweep adjustments are sensitive. Do not exceed a maximum of three points turn on the nuts (4, figure 5-1). Record all adjustments made on DA Form 2408-16, M/R HUB. Do not sweep blades forward.

NOTE

Hold blade latch retainer as near vertical as possible.

Use AVA TM 1-6625-724-13&P to balance, you may exceed 3 points as long as you ensure thread exposure of latch bolt is as specified in TM 1-1500-204-23.

(1) Index, with a pencil mark, position of latch nut (4, figure 5-1) on the leading edge side of the main rotor blade and loosen nut approximately 1/2 point.

(2) Torque latch nut (4) on the trailing edge side of the main rotor blade to **75 TO 95 FOOT-POUNDS**.

(3) Torque latch nut (4) on the leading edge side of main rotor blade to **75 TO 95 FOOT-POUNDS**.

(4) If condition is worse, remove sweep and sweep the opposite blade aft 1/2 point. Sweep until the best low rpm lateral vibration level is obtained.

(5) Recheck the high rpm level and sweep blades aft as indicated by amount of vibration noted.

NOTE

After all adjustments have been completed, ensure the thread exposure of latch bolt (13, figure 5-11) is as specified in TM 1-1500-204-23 beyond the self-locking element of nut (9).

5-7. REPAIR — MAIN ROTOR ASSEMBLY. Refer to specific components for maintenance instructions.

5-8. REMOVAL — MAIN ROTOR ASSEMBLY.

Premaintenance Requirements for Removal of Main Rotor Assembly

Condition	Requirements
Model	OH-58A and OH-58C
Part No. or Serial No.	All
Special Tools	(T12) (T7) (T8) (T9)
Test Equipment	None
Support Equipment	None
Minimum Personnel Required	Two
Consumable Materials	(C96)
Special Environmental Conditions	None

WARNING

Do not allow main rotor blades to rotate pitch change axis. If blade is inadvertently allowed to rotate on the pitch change axis beyond 90 degrees, the main rotor grip retention strap shall be replaced.

a. Code pitch link assemblies (1, figure 5-6) for reinstallation in same position. Disconnect pitch link assemblies from pitch horn (7) by removing cotter pin (2), nut (3), washers (4), and bolt (5) from clevis (6).

NOTE

Secure loose links with protective padding to prevent damage to links.

b. Secure main rotor blade pitch horns (7) to yoke (8) with T-Handle and install nut and washer.

c. For local fabrication of work aid T-Handle, refer to figure 5-8.

d. Install blade tiedown on main rotor blade to guide rotor during removal.

CAUTION

Main rotor must be perpendicular to the mast when using the power wrench (T7) to loosen or tighten the mast nut.

e. Remove bolt (9, figure 5-6), washer (10), nut (16), and mast nut lock (11). Remove mast nut (12) using standard tools or power wrench (T7), adapter (T8), and socket (T9). Refer to figure 5-7.

5-9. ALIGNMENT AND BALANCE (STATIC), MAIN ROTOR ASSEMBLY.

Premaintenance Requirements for Alignment and Balance of Main Rotor Assembly (Static)

Condition	Requirements
Model	OH-58A and OH-58C
Part No. or Serial No.	All
Special Tools	(T8) (T13) (T42)
Test Equipment	Protractor
Support Equipment	None
Minimum Personnel Required	Two
Consumable Materials	(C149) (C143) (C96)
Special Environment Conditions	None

WARNING

Do not allow main rotor blades to rotate on pitch change axis. If blade is inadvertently allowed to rotate on the pitch change axis beyond 90 degrees, the main rotor grip retention strap shall be replaced.

NOTE

Check main rotor trunnion for centering in the yoke prior to sweeping blades. Refer to paragraph 5-42.

a. Align main rotor as follows:

(1) Place main rotor hub and blade assembly on a stable level table with a steel top. Place two parallel supports on stand beneath main rotor. Supports may be aluminum bars approximately **2 x 3 x 12** inches long or suitable substitute.

NOTE

Place a block of wood against the heads of rotor blade retention bolts and tap the block, moving the grips outward of the hub to ensure blade grips are fully seated.

(2) Support each main rotor blade at approximately precone angle of the yoke with adjustable stands. Install main rotor blade positioning locks from balancing kit (T42).

NOTE

Precone angle is found by moving blade tip up or down so the blade retaining bolt turns freely in the grip assembly.

(3) Place bubble protractor on yoke (chordwise), set bubble to level and tighten set screw. Adjust both main rotor blade grips to zero pitch angle with the yoke. Set bubble protractor on grip blade bolt boss while adjusting grips to **ZERO** pitch angle.

(4) Position scope support (T28) and scope assembly (T13) on main rotor hub trunnion and yoke. Refer to figure 5-10.

(5) Check scope for **ZERO** adjustment. Sight through scope at an object approximately **50** feet

away. Draw a straight vertical line on object that will line up with vertical crosshair. Loosen clamp screws on scope assembly and rotate scope **180** degrees on tube axis. Tighten clamp screws. Vertical crosshair should line up on drawn line. If vertical crosshair does not align with drawn line, draw a second vertical line on object that will align with vertical crosshair. Measure one-half the distance between the two previously drawn lines and draw a third vertical line between two existing lines. Adjust screw marked "L" on side of scope to align vertical crosshair with third drawn line. Rotate scope **180** degrees on tube axis and check that crosshair aligns with third drawn line. If not, repeat above step until satisfactory.

(6) Check blade alignment by sighting on head of alignment pin (figure 5-10) located on upper surface of each blade tip.

(7) Loosen nut (5, figure 5-11) on blade being swept to prevent binding. Adjust nuts (9) to sweep blade as required to align center of alignment screw head with vertical crosshair of scope.

CAUTION

Ensure blades are not binding when sweep adjustments are made. Raise blade tip off stand each time sweep adjustment is made.

(8) Reverse scope assembly on mount. Check and adjust opposite blade assembly.

(9) Determine drag of nuts (9), and torque nuts **75 TO 95 FOOT-POUNDS** plus nut drag torque value. Do not allow blade latch retainer to rotate against wear pads. Hold blade latch retainer as near vertical as possible.

(10) Determine drag of blade bolt nuts (5) and torque **200 TO 220 FOOT-POUNDS** plus nut drag torque value.

(11) After torquing nuts, repeat alignment check and readjust if necessary. Remove scope and scope support.

NOTE

The following alternate method may be used to align the main rotor blades using a nylon cord and mirror in place of scope.

(12) Attach a thin nylon chord (C149) between alignment pins at tip of each blade. Draw the line tight and secure in place with masking tape (C143).

(13) Check that each blade grip is on **ZERO** pitch angle in relation to the yoke. (See substep (3).)

(14) Adjust nuts (9, figure 5-11) to sweep blade as required to locate nylon cord over both blade bolt holes as shown in view A of figure 5-10. Loosen nut (5, figure 5-9) on blade being swept to prevent binding.

(15) The vertical position of the cord in relation to the blade bolt is determined with a small mirror. Lay the mirror on the flat machined surface of the blade grip. View, with one eye, the cord, the mirror image of the cord, and the alignment point on the blade bolt. When all three reference points are aligned at both blade bolts, the main rotor blades are aligned.

WARNING

In performing the following procedures, do not allow main rotor blades to rotate on pitch change axis. If blade is inadvertently allowed to rotate on the pitch change axis beyond 90 degrees, the main rotor grip retention strap shall be replaced.

b. Balance main rotor as follows:

(1) Align main rotor blades, if not previously accomplished, and service grips and pillow block reservoirs.

(a) Support main rotor blades while carefully removing nuts, washers, and T-handles. Do not allow blades to rotate.

(b) Install balance tool pitch horn lock.

(2) Set up tools to accomplish balance procedure in accordance with TM 55-4920-201-14.

(3) Check chordwise balance and correct imbalance by sweeping one blade aft as follows:

NOTE

Blade sweep adjustments are sensitive. Do not exceed a total of three points turn on nut (9, Figure 5-11). Index nuts to blade latches with pencil or paint marks and record all changes made on DA Form 2408-16 for main rotor hub.

(a) Loosen blade bolt nut (5, Figure 5-11) in blade to be swept.

(b) Loosen front nut (9) and tighten rear nut (9) the same amount to sweep blade aft. Do not sweep blade forward.

(c) Recheck cordwise balance and repeat step (2) as required. Do not exceed a total of three points turn on nut (9).

(d) Torque nut (9) **75 to 95 FOOT POUNDS** plus nut drag torque value.

(e) Torque nut (5) **200 to 220 FOOT POUNDS** plus nut drag torque value.

NOTE

After all adjustments are complete, ensure thread exposure of latch bolt (13, Figure 5-11) is as specified in TM 1-1500-204-23 beyond self-locking element of nut (9).

(4) Check spanwise balance and correct imbalance as follows:

(a) Remove cap from bolt (1) of light blade.

(b) Add lead weight to hollow shank of blade bolt (1) to balance rotor spanwise.

(c) Reinstall cap.

(d) Support main rotor blades while removing pitch horn lock.

(e) Install T-handles and secure with lockwire (C96) to trunnion bearings.

5-10. INSTALLATION — MAIN ROTOR ASSEMBLY.

Premaintenance requirements for installation of Main Rotor Assembly	
Condition	Requirements
Model	OH-58A and OH-58C
Part No. or Serial No.	All
Special Tools	(T12) (T7) (T8) (T9)
Test Equipment	None
Support Equipment	None
Minimum Personnel Required	Two
Consumable Materials	(C22) (C51) (C53) (C84) (C96) (C129)
Special Equipment Condition	None

CAUTION

To prevent entry of contaminants into mast assembly and transmission, ensure mast cap plug (2, Figure 5-9) is installed and sealed with compound (C129).

CAUTION

If screw (26, Figure 5-4) protrudes above washer (17), do not install mast nut (12, Figure 5-6) until condition is corrected.

NOTE

The static stop shims should be checked and adjusted before installation of the hub. This includes new or overhauled hubs; and reinstallation of serviceable hubs.

a. Visually inspect condition of screw (26, Figure 5-4) washer (17) and special nut (12, Figure 5-6). Any evidence of scoring of screw head; gouging or scoring on washer or nut is cause for replacement.

NOTE

If contact between the mast washer retaining screws and the mast nut is found after installation "on an in-service aircraft" no corrective action is required. If contact is found during installation of the mast nut, the condition will be corrected prior to returning the aircraft to service.

b. Using metal scale or straightedge ruler, determine if head either screw (26) protrudes above top surface of washer (17). This is accomplished as follows:

(1) Hold edge of scale on surface perpendicular to washer.

(2) Move scale across surface of washer, paying particular attention to area of screw heads.

(3) If for any reason, scale catches on screw head; screw is unserviceable.

c. Clean mast threads, splines, and cone set with solvent (C22).

(1) Examine mast and trunnion splines for nicks, burrs, and scratches.

(2) Examine trunnion cone mating surface. Tapered surface should be smooth with no high spots. If necessary, use India stone (C84) and dress surface to a depth not to exceed **0.003** inch after cleanup.

(3) Inspect cone assembly (15, Figure 5-6) for burrs, nicks, grooves, or scratches. Remove high spots on mating surface using India stone (C84).

(4) Inspect main rotor trunnion (Figure 5-3, sheet 2) for correct master spline position.

d. Apply light coat of corrosion preventive compound (C51) to splines and recess provided for cone assembly (15).

e. Install sling (T12) on main rotor assembly.

WARNING

Do not allow main rotor blade to rotate on pitch change axis. If blade is Inadvertently allowed to rotate on pitch axis beyond 90 degrees, main rotor grip retention shall be replaced. Rotor mast must be aligned directly over mast to avoid damage to mast threads.

NOTE

Install split cones as matched set only.

f. Position cone assembly (15) with bevel side up on mast and carefully lower main rotor assembly into position. Apply small amount of corrosion preventive compound (C53) to mast threads, install mast nut (12). Torque mast nut (12) **250 to 275 FOOT POUNDS** to align with mast nut lock (11). If using power wrench (T7), adapter (T8) and socket (T9) refer to Figure 5-7. Install mast lock nut (11, Figure 5-6), bolt (9), washer (10), and nut (16). Torque nut (16) to **60 INCH-POUNDS**.

CAUTION

Ensure static stop (1, Figure 5-12) has been properly shimmed for tight .t with 0.002 to 0.004 inch interference fit; and is properly seated in place on fitting (16), prior to torquing of bolt (2). Refer to paragraph 5-56.

NOTE

No further retorquing is required unless mast nut is once again removed. If low mast nut torque is suspected after initial torque and helicopter has been in operation, the applicable check is to remove all torque and retorque 250 FOOT POUNDS minimum, 275 FOOT POUNDS maximum. Within these limits; retorque as near as possible to 275 FOOT POUNDS.

g. Position one blade up to gain access to previously installed static stop (1, Figure 5-12). It may be necessary to remove lockwire and loosen bolts for alignment of static stop. Torque bolts (2) to **175 INCH POUNDS** and lockwire (C96) together. Repeat procedure for opposite static stop.

h. Carefully remove T handle and install pitch link assembly. Refer to paragraph 5-158.

i. Perform tracking procedures for main rotor blades. Refer to AVA TM 1-6625-724-13&P.

SECTION II MAIN ROTOR HUB

5-11. MAIN ROTOR HUB.

5-12. DESCRIPTION — MAIN ROTOR HUB. The main rotor hub assembly provides for attachment and control of main rotor blades. The hub assembly consists of grips, yoke, trunnion, pitch horns, blade bolts, strap bolts, and blade latches, pillow block, hub ring, static stops, and associated parts. Two types of hub may be used; either oil or grease lubricated. With oil lubrication, oil reservoirs with sight gages, are provided for pitch change bearings in the two grips and for two pillow block bearings utilized with flapping axis trunnion. With grease lubrication, grease fittings and relief valves are used for the same purpose.

NOTE

For maintenance of main rotor hub refer to applicable instructions contained in this section for each component.

Premaintenance Requirements for Disassembly of Main Rotor Hub

Condition	Requirements
Model	OH-58A and OH-58C
Part No. Serial No.	All
Special Tools	(T31) (T36) (T46)
Test Equipment	Eddy Current Inspection Unit Magnetic Particle Method
Support Equipment	None
Minimum Personnel Required	Two
Consumable Materials	(C2) (C22) (C38) (C45) (C51) (C55) (C96) (C102) (C104) (C116) (C118) (C124) (C126) (C131) (C146) (C148) (C77)
Special Environmental Conditions	None
References	TM 1-1520-254-23

WARNING

Do not interchange parts from one hub assembly to another. Yoke, grip, trunnion, and pillow block bearings can be replaced only at AVIM level of maintenance. Grip may be removed for grip seal replacement.

5-13. CLEANING AND CORROSION PROTECTION — MAIN ROTOR HUB.

WARNING

Aliphatic Naphtha is flammable and toxic to eyes, skin, and respiratory tract. Wear protective gloves and goggles/face shield. Avoid repeated or prolonged contact. Use only in well-ventilated areas (or use approved respirator as determined by local safety/industrial hygiene personnel). Keep away from open flames, sparks or other sources of ignition.

a. Spot clean main rotor hub with naphtha (C22).

NOTE

Corrosion protection procedures are to be accomplished at overhaul and/or when main rotor is disassembled for any reason.

b. The following instructions are applicable in their entirety to main rotor hubs.

NOTE

Cover (6, Figure 5-12) is bonded onto the blade grip (13) latch bolt lugs with sealing compound (C131).

All parts to be thoroughly cleaned with aliphatic naphtha (C22); ensure all parts are thoroughly dry before installing.

c. Apply corrosion preventive compound (C51) to the following parts:

(1) The inner diameter of latch bolt (12, Figure 5-12) holes in main rotor grip (13) lugs.

(2) The inner diameter of pin holes in strap fitting (16). Also to outer diameter of fittings but NOT the area that will be sealed.

(3) The mating area of main rotor yoke (28) and radius ring (17).

(4) The inner diameter of holes in each end of straps (14).

(5) The outer diameter of pins (15) and shanks of bolts (12).

(6) The mating surfaces of grip, strap fittings, and strap assembly.

5-14. GRIPS — MAIN ROTOR

5-15. DESCRIPTION — GRIPS MAIN ROTOR. The main rotor hub grips (13, Figure 5-12) provide for attachment of the rotor blades to the main rotor hub. The blade grips are retained on the hub yoke by tension/torsion strap assemblies. Changes in blade pitch angle are made by turning the grips on the yoke. Each grip has two pitch change bearings (34). Oil reservoirs or grease fittings provide lubrication of the pitch change bearings.

5-16. REMOVAL — GRIP, MAIN ROTOR (AVIM).

NOTE

Identify parts for reinstallation on same side if both rotor grips are removed.

a. Remove main rotor assembly. Refer to paragraph 5-8.

b. Remove main rotor blades. Refer to paragraph 5-100.

c. Remove lockwire and T-handle.

d. Remove static stop (1, figure 5-12) by removing bolt (2), washer (3), shim (4), and stop (5).

e. Remove nut (7), latch retainer (8), and spring (9).

f. Remove nut (10) using socket wrench (T31), washers (11), and bolt (12).

CAUTION

When grip is removed from yoke in the following step, do not allow weight of yoke to rest on hub shield (22). Lay yoke on side.

g. Slide grip (13) and pitch horn (20) off yoke (28).

5-17. DISASSEMBLY — GRIPS, MAIN ROTOR (AVIM).

a. Remove three nuts (27, figure 5-12), bolts (18), washers (19), and remove pitch horn (20). Remove seal (21) and packing (29), from pitch horn and discard.

b. Insert a wooden or aluminum dowel **2.125 x 12** inches through grip and into retainer (23). Rock dowel and retainer a few times to break seal. Remove retainer by withdrawing dowel, and discard seal (24) and packing (25).

c. Remove bearings (34) and spacer (35, figure 5-12). Apply heat lamp to grip if required. Use thermomelt (C146) to indicate temperature and prevent overheating.

d. If hub is grease lubricated, remove grease fitting (40) from grip (13) only if replacement is required.

CAUTION

Do not heat grip to temperature in excess of 200°F (93°C).

5-18. INSPECTION — GRIPS, MAIN ROTOR (AVIM).

a. Inspect grip bearings for apparent damage caused from excessive wear, pitting or overheating. Check for damage to rollers or races.

b. Visually inspect the inner and outer surfaces of the grip tangs for cracks at the outboard side of the blade bolt holes at the interface of the inside hold diameter and adjacent radius.

c. Inspect grip in accordance with figure 5-13. Visually check grip for corrosion, pitting, and general condition. If hub is grease lubricated, inspect grease fitting for clogs, corrosion, or damage. If crack of the grip is suspected, refer to TM 1-1520-254-23, Technical Manual Aviation Unit Maintenance (AVUM) and Aviation Intermediate Maintenance (AVIM) Manual Nondestructive Inspection Procedures for OH-58 Helicopter Series.

5-19. CLEANING — GRIPS, MAIN ROTOR (AVIM). Clean seal bore in grip (13, figure 5-12) and packing groove in retainer (23) with aliphatic naphtha (C22).

5-20. REPAIR — GRIPS, MAIN ROTOR (AVIM).

NOTE

Refer to figure 5-13 as necessary in performing following repair procedures.

a. Repair of the grip is accomplished by sanding the grip with sandpaper (C126) and polishing with crocus cloth (C55).

b. Apply epoxy primer (C116) to repaired areas.

c. If hub is grease lubricated, repair of grease fitting is limited to replacement of unserviceable grease fitting with serviceable like items.

5-21. REPAIR — GRIP BUFFER PLATE (AVIM).

a. Bond loose buffer plate as follows:

WARNING

Acetone is extremely flammable and toxic to eyes, skin, and respiratory tract. Wear protective gloves and goggles/face shield. Avoid repeated or prolonged contact. Use only in well-ventilated areas (or use approved respirator as determined by local safety/industrial hygiene personnel). Keep away from open flames, sparks, hot surfaces or other sources of ignition.

b. Sand buffer plate in area to be bonded with sandpaper (C124) and wipe dry with a cloth moistened with acetone (C2).

WARNING

Acetone is extremely flammable and toxic to eyes, skin, and respiratory tract. Wear protective gloves and goggles/face shield. Avoid repeated or prolonged contact. Use only in well-ventilated areas (or use approved respirator as determined by local safety/industrial hygiene personnel). Keep away from open flames, sparks, hot surfaces or other sources of ignition.

c. Clean bond area on grip with acetone (C2).

d. Apply a light brush coat of primer (C118) to buffer plate surface to be bonded. Air dry primer at room temperature for **30 to 50** minutes.

WARNING

Acetone is extremely flammable and toxic to eyes, skin, and respiratory tract. Wear protective gloves and goggles/face shield. Avoid repeated or prolonged contact. Use only in well-ventilated areas (or use approved respirator as determined by local safety/industrial hygiene personnel). Keep away from open flames, sparks, hot surfaces or other sources of ignition.

e. Mix adhesive (C19) per manufacturers instructions. As soon as possible after mixing adhesive, apply to each faying surface extending approximately 1/16-inch past edge diameters of buffer plate. Press parts together firmly ensuring buffer plate is aligned with blade bolt holes in grip. Remove excess adhesive with acetone (C2). Apply bond line pressure over full bond region throughout the cure cycle. Cure for two hours at temperature of **160° to 180°F (71° to 81°C)** or for **45 to 55** minutes at **190° to 210°F (88° to 99°C).** During cure cycle, check for edge voids and fill as necessary.

5-22. ASSEMBLY - GRIPS, MAIN ROTOR (AVIM).

NOTE

Grips shall be replaced in pairs of the same part numbers.

a. Install bearings (34) and spacer (35, figure 5-12). Apply heat to grip if required. Use thermomelt (C146) to indicate temperature and prevent overheating.

CAUTION

Do not heat to temperature in excess of 200°F (93°C).

b. Refer to figure 5-14 to determine the correct outboard seal configuration. The latest configuration can be used to replace the earlier parts on any main rotor hub. The older seal assembly (3) and retainer (6) must be used together. If correct parts are not available, replace the entire outboard seal retainer assembly. It is not necessary for both outboard grip seals to be identical.

NOTE

A locally fabricated tapered plug type work aid may be used to facilitate installation of excluder or seal on retainer.

(1) Clean grooves in retainer (4, 5, 6) and seal bore in grip with naphtha (C22) and dry.

NOTE

For ease of installation steps (2) and (3) may be reversed depending on type of M/R hub.

(2) Install new excluder (2) on retainer (4 or 5) or install new seal as assembly (3) on retainer (6). Refer to figure 5-14 for correct installation.

(3) Install new packing (1) under lip of excluder (2) as shown in figure 5-14.

(4) Coat outboard packing groove of retainer (4, 5, or 6) with sealing compound (C131) and install new packing (7) in groove. Coat packing with sealing compound.

(5) Coat seal bore in grip (13, figure 5-12) with sealing compound (C131). Install assembled outboard seal retainer assembly with packing (7, figure 5-14) outboard (toward rotor blade) and fully seat to end of grip seal bore.

(6) Cure sealing compound for **72** hours at room temperature **(70° to 80°F)**. Accelerated cure is **1** hour at **70° to 80°F (21° to 27°C)** followed by **2** hours at **175° (79°C) ±5**.

c. Apply a thin coat of sealing compound (C131) to outside diameter of new seal (21) and inside diameter of pitch horn (20). Coat lip of new seal with lubricant (C104) and install inboard face of pitch horn. Ensure mating surfaces of pitch horn (20) and grip (13) are wiped clean and dry.

d. Install new packing (29, figure 5-12) in outboard face of pitch horn (20). Position pitch horn on grip (13) and secure with three bolts (18), three washers (19) (next to bolt heads), three washers (26) and three nuts (27). Torque nut to **100 TO 140 INCH-POUNDS**.

e. Apply slippage marks using torque seal (C47) or other suitable paint across bolt threads, washer and nut to grip.

f. If hub is grease lubricated, install grease fitting (40) on grip (13). Apply unreduced primer (C116) to threads of grease fitting and install in grip while wet.

5-23. INSTALLATION - GRIPS, MAIN ROTOR (AVIM).

NOTE

Prior to performing any installation procedures, inspect yoke (paragraph 5-52 and accomplish corrosion control paragraph 5-13).

a. Install strap, pin, fitting and ring per paragraphs 5-36 and 5-13. On oil lubricated hub apply lubricating oil (C102) to grip bearings (34, figure 5-12), spacers (35), and to the bearing surfaces and seal bores on yoke (28). On grease lubricated hub hand pack grip bearings, coat yoke bearing spindles and lightly lubricate yoke seal bores with grease (C77). Install grip on yoke.

b. Inspect and install bolt and blade latch retainer in accordance with para 5-55.

c. Service main rotor hub in accordance with paragraph 1-9.

NOTE

Do not torque or lockwire bolts (2, figure 5-12) until main rotor hub and blade assembly is installed on mast. Leave bolts (2) just loose enough to slide or lightly tap the stops laterally for alignment to the mast, but do not allow the inboard T/T strap fitting to rotate. Install T-handles and secure with lockwire (C96) to trunnion bearings.

d. Install main rotor blades. Refer to paragraph 5-106.

5-24. PITCH HORN — MAIN ROTOR.

5-25. DESCRIPTION — PITCH HORN, MAIN ROTOR. The pitch horn is a component of the main rotor hub and is used to transmit control inputs to the blade grip.

5-26. REMOVAL — PITCH HORN, MAIN ROTOR. (AVIM)

a. Remove main rotor assembly. Refer to paragraph 5-8.

b. Remove the blade in accordance with paragraph 5-100.

c. Remove the grip in accordance with paragraph 5-16.

d. Remove pitch horn in accordance with grip disassembly instructions listed in paragraph 5-17.

e. If hub is grease lubricated, remove relief valve (41, figure 5-12) from pitch horn (42) only if necessary.

5-27. CLEANING — PITCH HORN, MAIN ROTOR. Clean pitch horn with aliphatic naphtha (C22) and wipe with dry clean cloth.

5-28. INSPECTION — PITCH HORN, MAIN ROTOR. Inspect pitch horn as shown in figure 5-15. If crack on the surface of the pitch horn is suspected, refer to TM 1-1520-254-23, Technical Manual Aviation Unit Maintenance (AVUM) and Aviation Intermediate Maintenance (AVIM) Manual Nondestructive Inspection Procedures for OH-58 Helicopter Series.

5-29. REPAIR — PITCH HORN, MAIN ROTOR (AVIM). Repair by sanding with sandpaper (C126) and polishing with crocus cloth (C55). Refer to figure 5-15. If hub is grease lubricated repair of relief valve is limited to replacement of unserviceable item with serviceable like item.

5-30. INSTALLATION — PITCH HORN, MAIN ROTOR (AVIM). Install pitch horn in accordance with grip assembly instructions listed in paragraph 5-22 and 5-23. If hub is grease lubricated, install relief valve (40, figure 5-12) on pitch horn (42). Apply unreduced primer (C116) to threads of relief valve and install while wet.

5-31. HUB STRAP/PIN/FITTING AND RING — MAIN ROTOR.

5-32. DESCRIPTION — HUB STRAP/PIN/FITTING AND RING. The strap/pin/fitting and ring are components of the main rotor hub that provide for attachment of main rotor hub assembly to the blade assembly.

5-33. REMOVAL — HUB STRAP/PIN/FITTING AND RING — MAIN ROTOR.

a. Remove main rotor hub and blade assembly in accordance with procedures listed in paragraph 5-8.

b. Remove blade in accordance with procedures listed in paragraph 5-100.

c. Remove/disassemble grip in accordance with procedures listed in paragraphs 5-16 and 5-17.

CAUTION

Do not hammer on end of strap assembly.

d. To remove strap assembly (14, figure 5-12), perform the following steps: (AVIM)

(1) Move strap assembly (14) inboard.

(2) Push pin (15) out of fitting (16).

(3) Remove strap assembly (14), fitting (16) and ring (17).

5-34. INSPECTION — HUB STRAP/PIN/FITTING AND RING — MAIN ROTOR.

a. Inspect strap in accordance with the following steps:

NOTE

Strap assembly must be replaced if any of the following inspections fail.

(1) Urethane rubber for deterioration and bulging especially on inboard surfaces near bushings (spool). Bulging may be accepted on any strap assembly provided bulging does not exceed **0.150** inch above normal contour. Refer to figure 5-16. Bulging not to exceed **0.250** inch may be accepted on strap assemblies prior to serial number 13336. Bulging may be measured by laying a straight edge across the bulge parallel with normal contour or by determining the difference in width at point of bulge with width at normal contour. A micrometer may be used for this purpose.

NOTE

Deviations from a straight contour other than bulging are acceptable. Due to the tapered construction of strap legs width comparison measurements must be taken in close proximity to bulge.

(2) Permanent displacement and obvious looseness of the spool in strap assembly. Wires next to the spools visible for more than **0.090** inch at any one spot, measured perpendicularly to the pin bore and directly outward from the top edge of chamfer. This separation is the result of shortcomings in bonding at the spool rather than urethane deterioration.

(3) Not more than 10 loose wire ends shall be visible next to each spool. Loose wire ends can result from terminal points of winding at time of manufacture.

(4) Wire exposure in any other area is not permitted. Exposure would indicate cracking and other forms of urethane deterioration. Urethane deterioration may result from damage, long term oil saturation, and/or improper cure at time of manufacture. Deterioration of the urethane cover may permit wires to cross internally and rub against one another. Rubbing and fretting may result in long term breakage of wires.

(5) A permanent twist is acceptable provided bulging is within limits. Strap stiffness may vary from strap to strap when flexed in the unloaded condition.

(6) Grease or oil contamination resulting in swelling/severe deterioration of the urethane coating is cause for rejection.

(7) Inspect spool bore using a ten power glass. Look for cracking and pitting. No cracking permitted. Pitting will not exceed **0.002** inch in depth.

(8) Spool bore for wear. Large hole for a maximum **0.877** inch diameter and small hole for a maximum **0.752** inch diameter.

b. Inspect pin in accordance with figure 5-17. If crack on the pin is suspected, refer to TM 1-1520-254-23, Technical Manual Aviation Unit Maintenance (AVUM) and Aviation Intermediate Maintenance (AVIM) Manual Nondestructive Inspection Procedures for OH-58 Helicopter Series.

c. Inspect fitting in accordance with figure 5-18. If crack on the fitting is suspected, refer to TM 1-1520-254-23, Technical Manual Aviation Unit Maintenance (AVUM) and Aviation Intermediate Maintenance (AVIM) Manual Nondestructive Inspection Procedures for OH-58 Helicopter Series.

d. Inspect ring in accordance with figure 5-19.

5-35. REPAIR — HUB STRAP/PIN/FITTING AND RING — MAIN ROTOR (AVIM).

NOTE

Repairs are not authorized for the strap or pin.

a. To repair fitting, polish with crocus cloth (C55). Refer to figure 5-18.

b. To repair ring, polish with crocus cloth (C55). Refer to figure 5-19.

5-36. ASSEMBLY — HUB STRAP/PIN/FITTING AND RING/STATIC STOP — MAIN ROTOR. (AVIM).

a. Apply a coat of sealing compound (C131), to the mating area of the yoke (28, figure 5-12) and the flange of fitting (16), and the mating area of ring (17) and fitting (16).

b. Insert ring (17) at inboard end of yoke (radius end of outside diameter facing outboard).

c. Insert strap (14) through outboard end of yoke spindle (small hole inboard).

NOTE

The P/N 206-011-147-5 and PIN 206-011-154-101 tension/torsion straps are fully interchangeable in pairs only.

d. Position fitting (16), over inboard end of strap and insert pin (15).

e. Seat fitting in yoke by pulling strap outboard.

f. Permit excess sealing compound (C131) squeeze out to remain in place.

g. Determine that milled (flat) surface of fitting (16) is positioned toward yoke (28) base and shim static stops as follows: Place shims (4) on static stop (1). Use shims of correct thickness to provide **0.002 to 0.004** inch interference fit between static stops (1) and fitting (16). Position rubber stop (5) in flat surface of fitting (16) and install static stop (1) with washers (3) and bolts (2). Secure bolts (2) so that static stops are not loose. Static stop to mast adjustment bolt (2) torque will be accomplished when hub assembly is installed on helicopter.

h. Install the grips. Refer to paragraph 5-23.

i. Install the blade. Refer to paragraph 5-106.

j. Install the main rotor hub and blade. Refer to paragraph 5-10.

NOTE

Ensure stop (5) and static stop (1) are properly aligned, shimmed, and installed before sealing compound (C131) on fitting (16) cures.

5-37. TRUNNION — MAIN ROTOR.

5-38. DESCRIPTION — TRUNNION — MAIN ROTOR. The trunnion is the center of the pitch axis and is housed by pillow blocks. The pillow blocks are attached to the main rotor hub yoke, which couples the main rotor blades.

5-39. CLEANING — TRUNNION — MAIN ROTOR.

WARNING

Aliphatic Naphtha is flammable and toxic to eyes, skin, and respiratory tract. Wear protective gloves and goggles/face shield. Avoid repeated or prolonged contact. Use only in well-ventilated areas (or use approved respirator as determined by local safety/industrial hygiene personnel). Keep away from open flames, sparks or other sources of ignition.

a. Clean trunnion (7, figure 5-4) and associated exposed portions with naphtha (C22).

b. A soft fiber bristle brush (C31) may be used to scrub parts for cleaning.

5-40. INSPECTION — TRUNNION — MAIN ROTOR. Inspect trunnion (7, figure 5-4) exposed portions in accordance with figure 5-3. Inspect trunnion (figure 5-3, sheet 2) for correct master spline position. If crack on the trunnion is suspected, refer to TM 1-1520-254-23, Technical Manual Aviation Unit Maintenance (AVUM) and Aviation Intermediate Maintenance (AVIM) Manual Nondestructive Inspection Procedures for OH-58 Helicopter Series.

5-41. REPAIR — TRUNNION — MAIN ROTOR. Repair trunnion (7) exposed portions in accordance with figure 5-3.

5-42. ADJUSTMENT — TRUNNION — MAIN ROTOR (AVIM).

a. The preferred method is to locally manufacture a work aid per Figure 5-20.

(1) Position the yoke on a flat surface.

(2) Tighten the two set screws (8) alternately until the set screws bottom.

(3) Position work aid (figure 5-20) in trunnion (7). Ensure work aid is properly seated.

(4) Apply thumb and index finger pressure to work aid during measuring process to eliminate any looseness between work aid and trunnion. Attach a dial indicator to work aid and rotate work aid so that dial indicator pointer is against the machined surface of either pillow block.

(5) Adjust the dial indicator to read zero, then rotate the work aid to the opposite pillow block machined surface. Take and record setting.

(6) A maximum tolerance of **0.003** inch is allowed to properly center the trunnion on the pitch axis.

(7) If trunnion is not centered within **0.003** inch, adjust set screws (8) alternately and equally until limits are satisfied.

(8) Torque each adjusting screw (8) **115 to 130** inch pounds plus drag torque. Recheck centering.

(9) Attach a spring scale to washer (17) through one of the two holes provided.

(10) Rotate trunnion (7) to approximately 45 degrees from its normal position.

(11) With a steady upward pull on the spring, take and record reading as the trunnion passes through the approximate mid-point of travel.

(12) The pull required shall not exceed **50** pounds (maximum **50** inch-pounds rotational preload).

NOTE

If trunnion friction is excessive or ratcheting occurs, disassemble and check for rough surface on mating faces of screws (8), thrust plugs (9), wear plates (if used), and inner faces of pillow blocks. All mating surfaces must be smooth (32 micro-inches or better), square, free from burrs and sharp edges. There must be a coating of lubricant on all mating surfaces.

(13) After trunnion adjustment procedures are completed, apply primer (C115) and sealant (C120) to setscrews (8). Do not remove setscrews (8) to apply primer and sealant, capillary action will cause it to flow into threaded area.

(14) Install main rotor blades. Refer to paragraph 5-106.

(15) Check alignment and balance (static). Refer to paragraph 5-9.

(16) Install main rotor hub and blade assembly. Refer to paragraph 5-10.

(17) Perform tracking on main rotor hub blade assembly. Refer to paragraph AVA TM 1-6625-724-13&P.

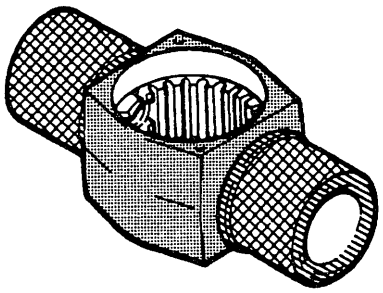

TYPE OF DAMAGE	AREA A	AREA B	AREA C
	MAXIMUM DEPTH		
NICKS, SCRATCHES, SHARP DENTS AND CORROSION	See Note No. 2	0.030 In. Before and After Repair	0.020 In. Before and After Repair

NOTES:

1. These limits apply with bearing sleeves removed from spindles.

2. Area A no defects or repairs permitted in the radii. That is not removable with crocus cloth (C55).

3. Nicks and dents on the splines may be cleaned up to one third of the spline depth for half the length of the spline. A maximum of three splines may receive cleanup.

4. Damage to the spindle (area C) must not reduce overall diameter of bearing support surface. Rework limited to removal of sharp edges from nicks and scratches.

5. Permitted damage and repairs consisting only of localized small nicks, pits, or dents, and longitudinal scratches should not exceed 10% surface area on each spindle.

6. Adjoining or continuous damage shall not exceed 0.250 square inch area with no more than two such areas diametrically opposed per spindle.

7. Repair area, except splines and spindles, will be coated with epoxy polyamide primer (C116).

8. No cracks permitted.

Figure 5-3. Inspection and Repair Limits — Trunnion — Main Rotor (Sheet 1 of 2)

TRUNNION 206-011-113-103

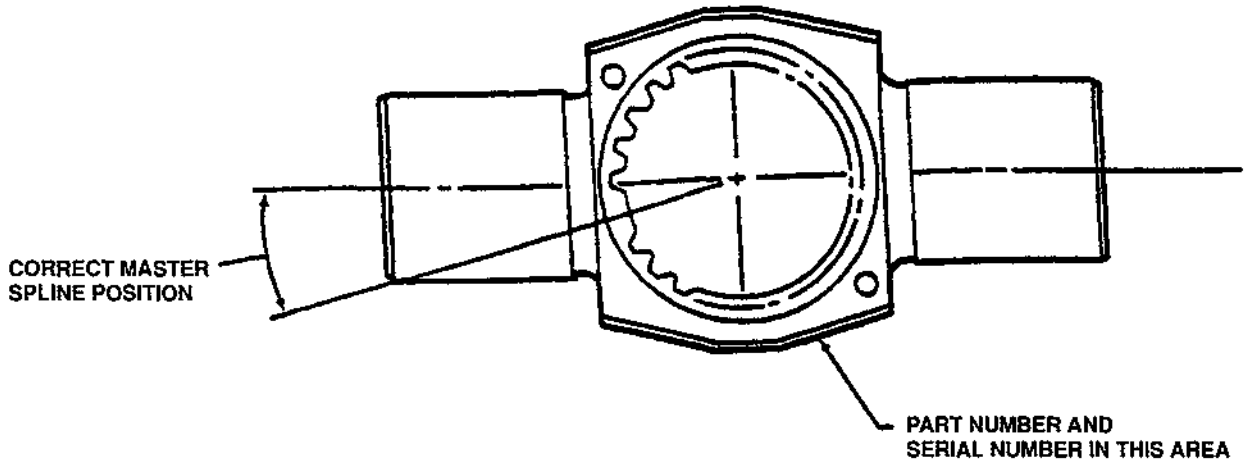

VIEW LOOKING DOWN

NOTE

This inspection is not applicable to trunnion that has Serial Number starting with prefix "HB-"

NOTES:

1. Viewing trunnion from above, visually inspect that the master spline is centered approximately 14 degrees counterclockwise from the axis through the trunnion splines. The spline groove immediately clockwise to the master spline is centered on the axis of the splines.
2. Trunnion with mislocated master spline must be replaced.

Figure 5-3. Inspection and Repair Limits — Trunnion — Main Rotor (Sheet 2 of 2)

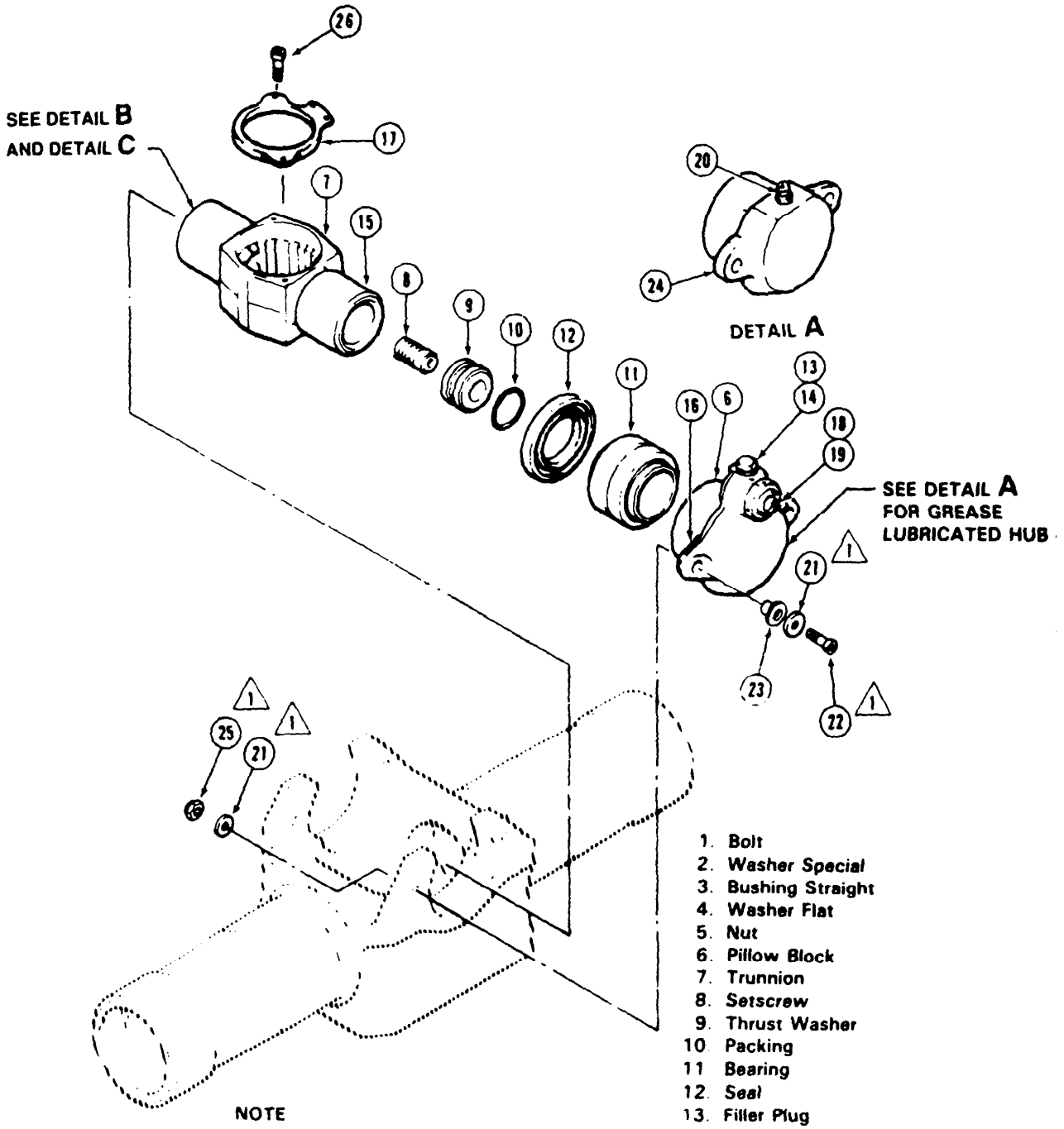

NOTE

1. TORQUE BOLT (22), WASHER (21), and (25) CONFIGURATION TO 140 TO 150 INCH-POUNDS.

2. TORQUE BOLT (1), WASHERS (4) AND NUT (5) CONFIGURATION TO 55 TO 65 INCH-POUNDS.

3. PILLOW BLOCK ATTACHMENT HARDWARE, (21, 22, AND 25) ARE THE PREFERRED CONFIGURATION AND MAY BE USED ON ANY HUB.

1. Bolt
2. Washer Special
3. Bushing Straight
4. Washer Flat
5. Nut
6. Pillow Block
7. Trunnion
8. Setscrew
9. Thrust Washer
10. Packing
11. Bearing
12. Seal
13. Filler Plug
14. Packing
15. Inner Race
16. Pad
17. Washer
18. Indicator, Sight Glass, Liquid
19. Packing
20. Grease Fitting
21. Washer Countersunk MS9482-10 (3)
22. Bolt (High Strength) MS21250-04018 (3)
23. Bushing (Flanged)
24. Pillow Block
25. Nut (High Strength) EB048 (3)
26. Screw MS24693S271

Figure 5-4. Main Rotor Hub Trunnion and Pillow Block (Sheet 1 of 4)

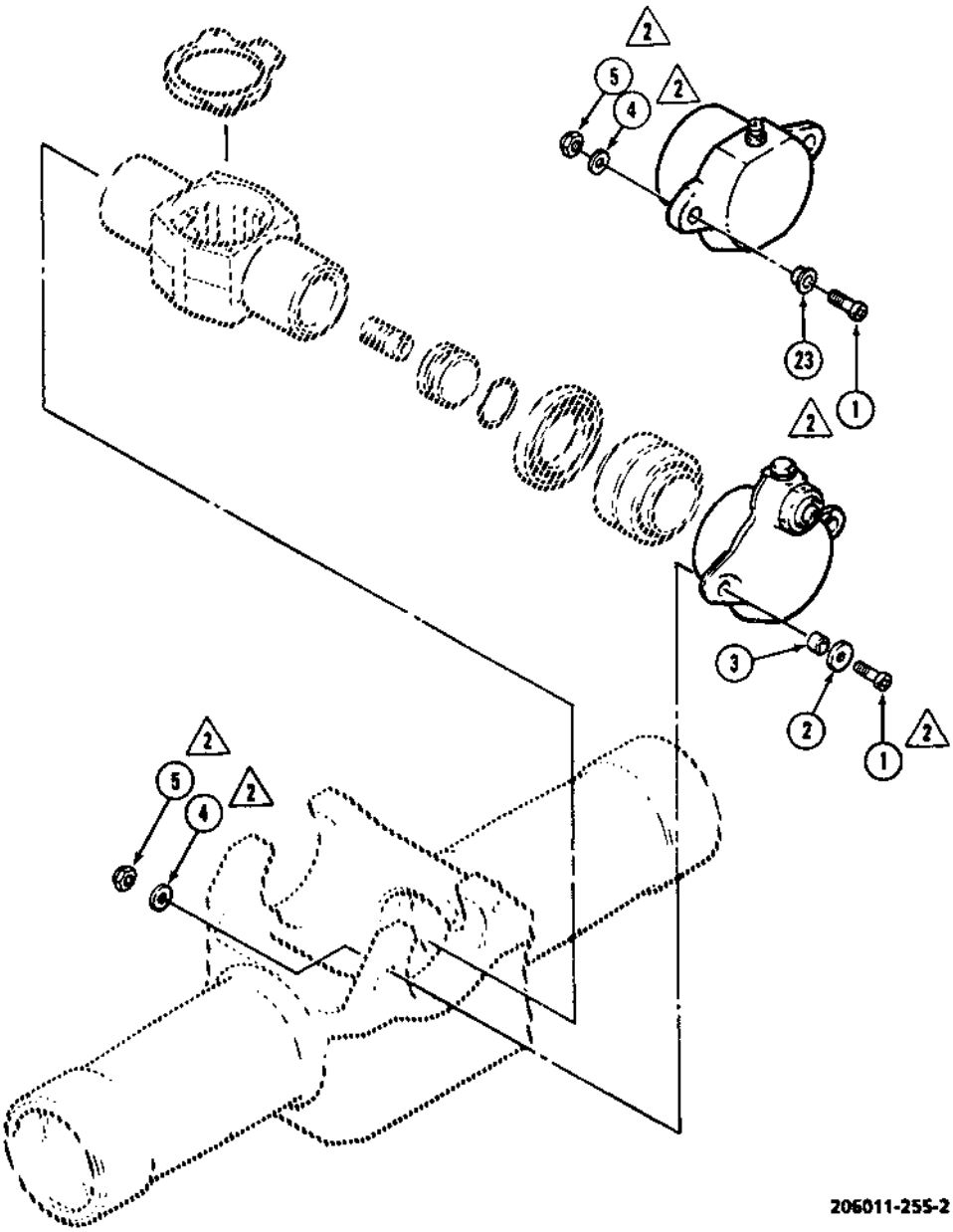

Figure 5-4. Main Rotor Hub Trunnion and Pillow Block (Sheet 2 of 4)

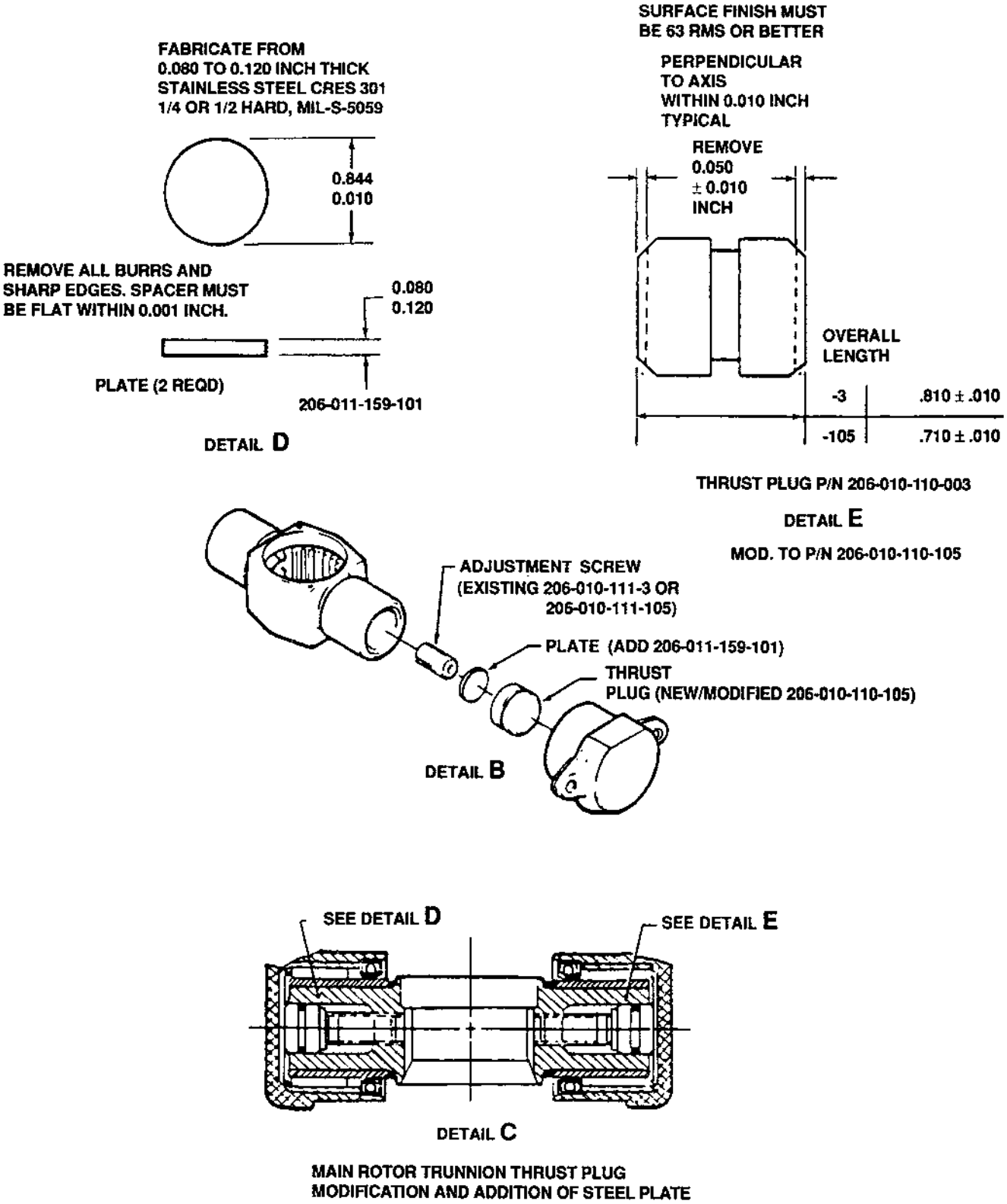

Figure 5-4. Main Rotor Hub Trunnion and Pillow Block (Sheet 3 of 4)

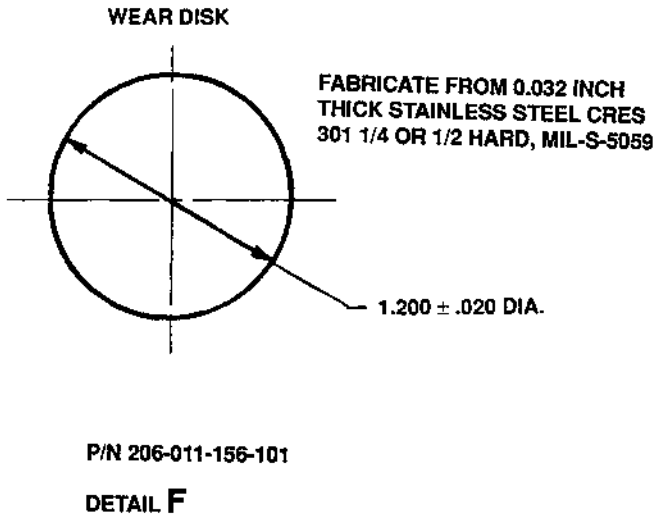

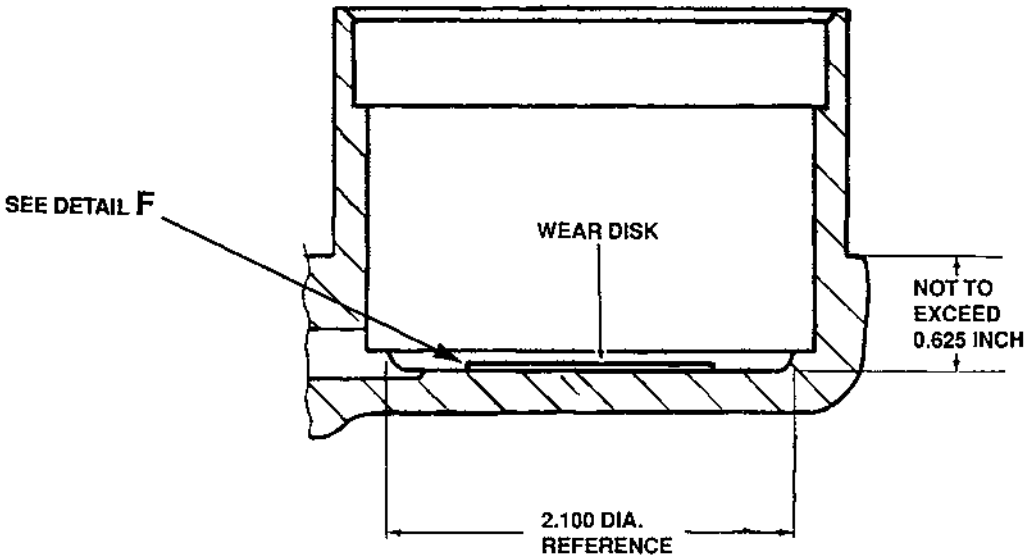

Figure 5-4. Main Rotor Hub Trunnion and Pillow Block (Sheet 4 of 4)

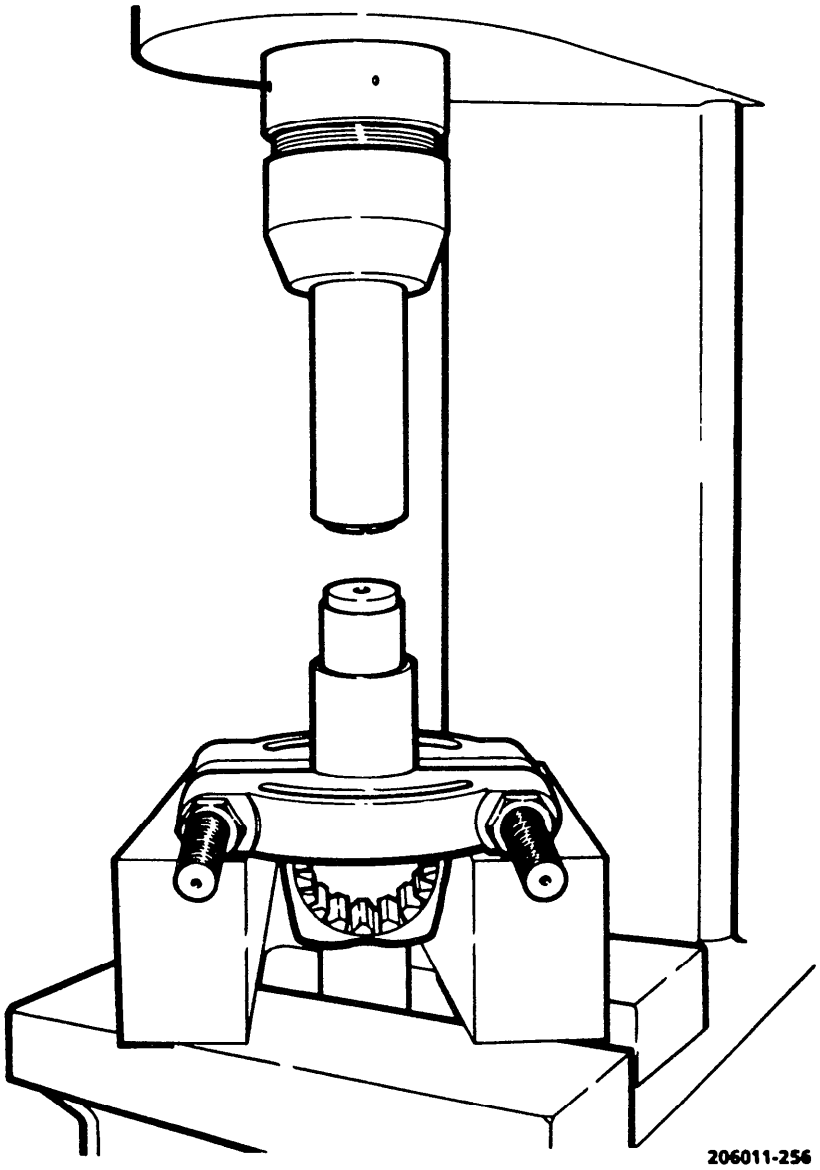

Figure 5-5. Removal — Trunnion Bearing Inner Race

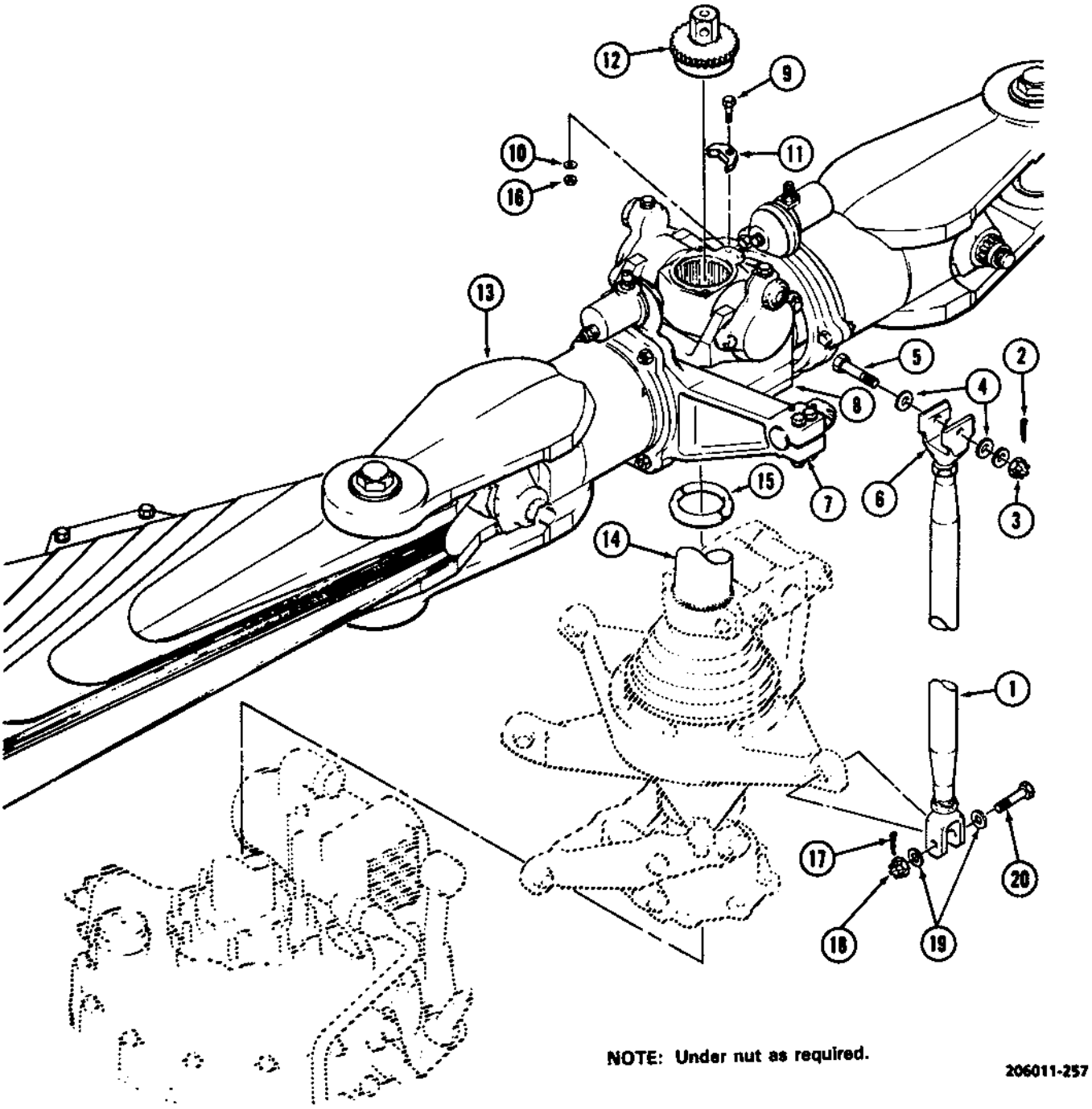

1. Pitch Link Assembly	6. Clevis	11. Mast Nut Lock	16. Nut
2. Cotter Pin	7. Pitch Horn	12. Mast Nut	17. Cotter Pin
3. Nut	8. Yoke	13. Grip	18. Nut
4. Washer (See Note)	9. Bolt	14. Mast	19. Washer (See Note)
5. Bolt	10. Washer	15. Cone Assembly	20. Bolt

Figure 5-6. Removal — Main Rotor Assembly

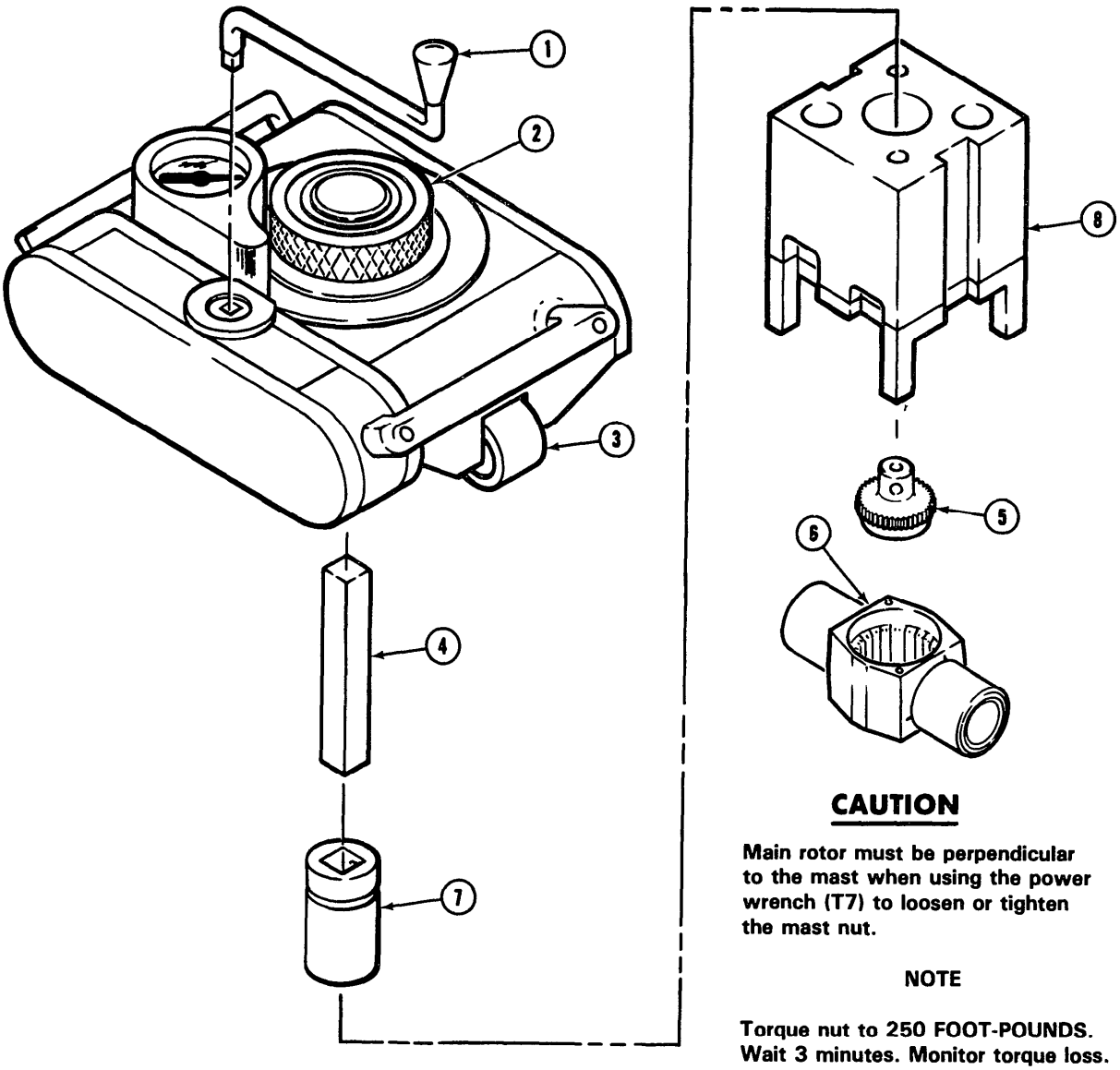

1. Input Crank Handle
2. Knurled Ratchet Indexer
3. Power Wrench
4. Drive Bar
5. Retaining Nut
6. Trunnion
7. Socket
8. Reaction Torque Adapter

CAUTION

Main rotor must be perpendicular to the mast when using the power wrench (T7) to loosen or tighten the mast nut.

NOTE

Torque nut to 250 FOOT-POUNDS. Wait 3 minutes. Monitor torque loss.

Retorque nut to 250 FOOT-POUNDS and monitor torque indicator for 1 minute.

Retorque if torque loss occurs in the 1 minute interval.

Back off holding pressure between wrench and torque adapter to zero.

Remove wrench and adapter and check for alignment of lock with nut splines.

206011-258

Figure 5-7. Main Rotor Mast Nut Torquing

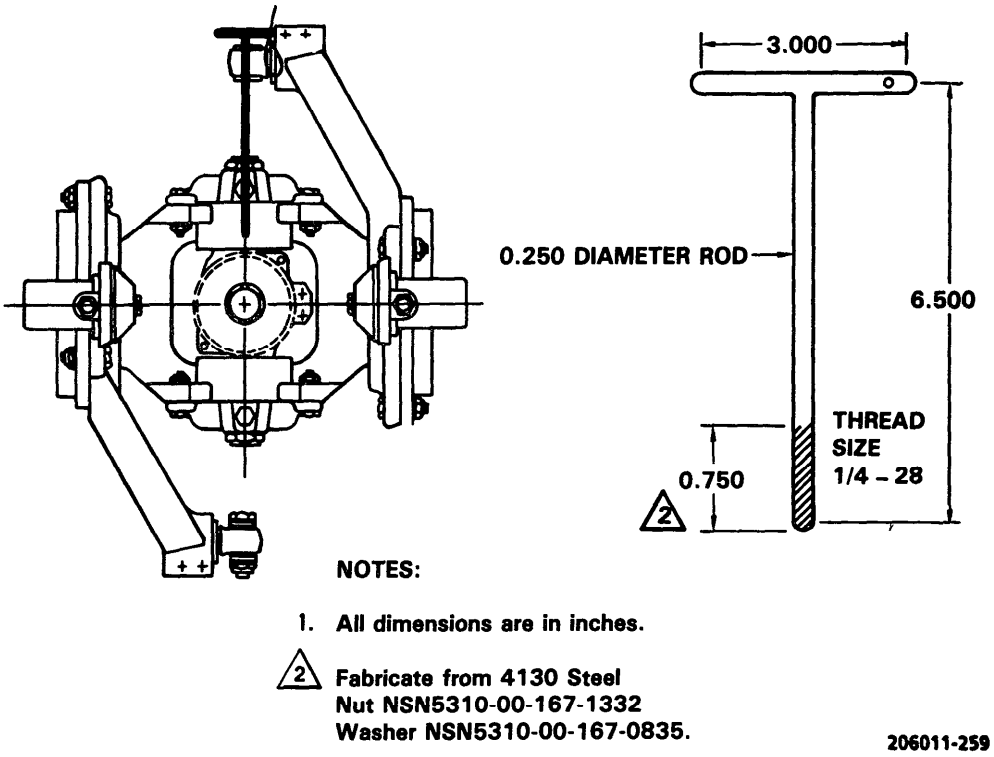

Figure 5-8. T-Handle Work Aid

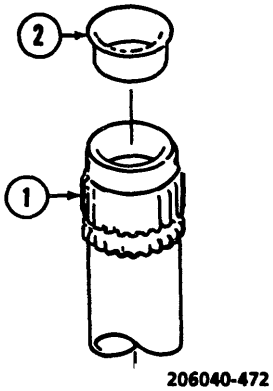

1. Main Rotor Mast
2. Cap-Plug, Protective

Figure 5-9. Main Rotor Mast Protective Cap — Plug

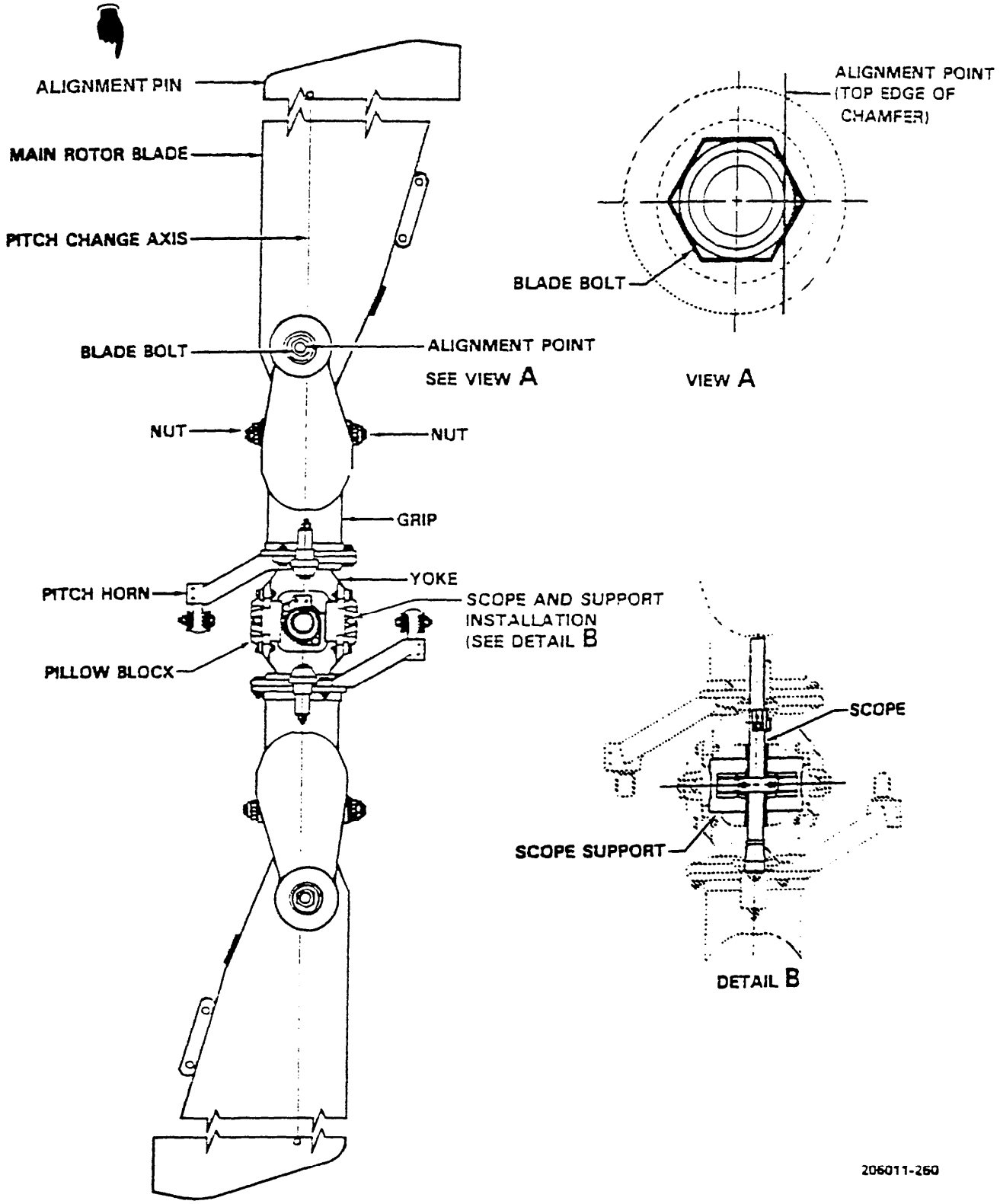

Figure 5-10. Alignment — Main Rotor Assembly

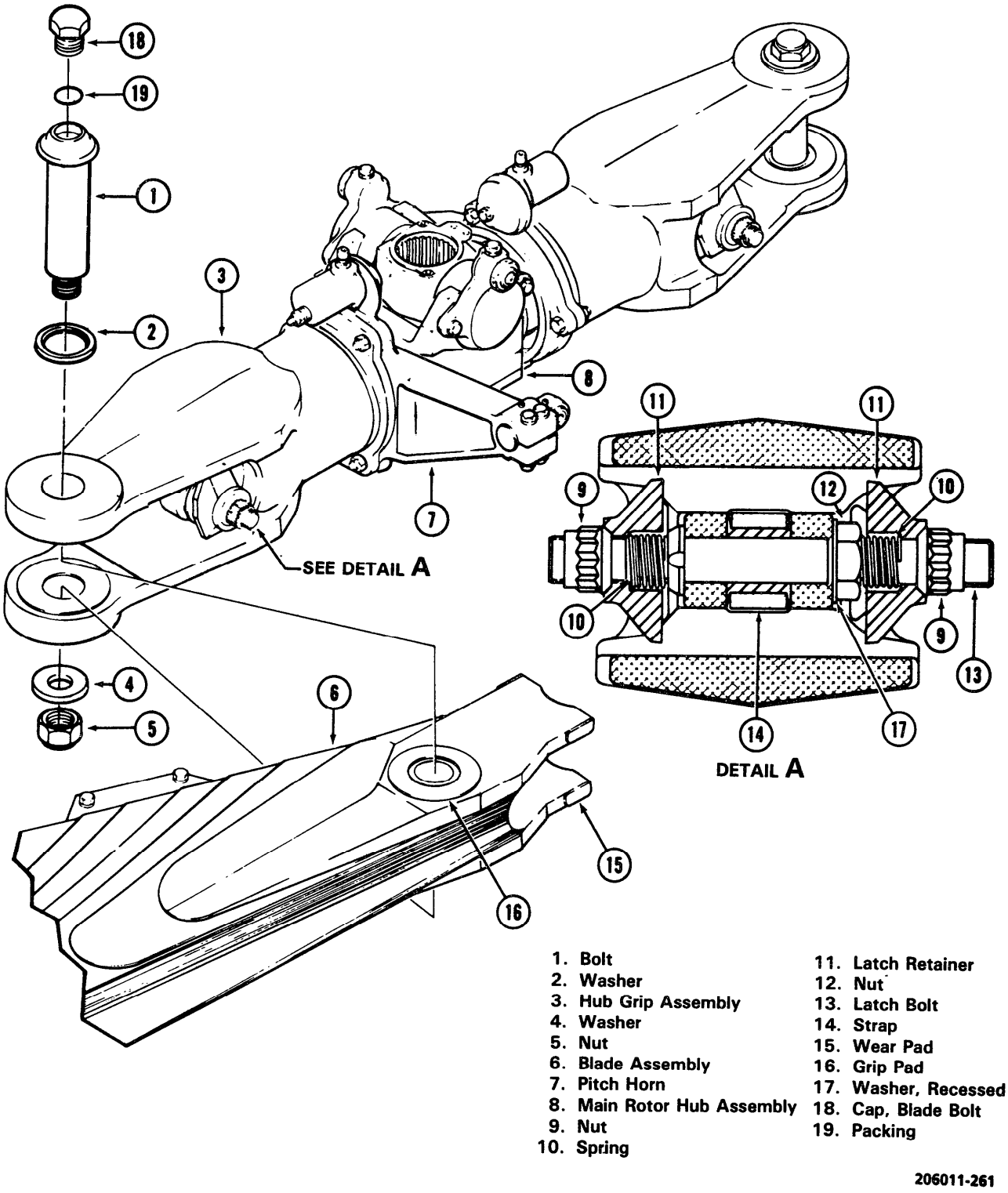

Figure 5-11. Removal — Main Rotor Blade

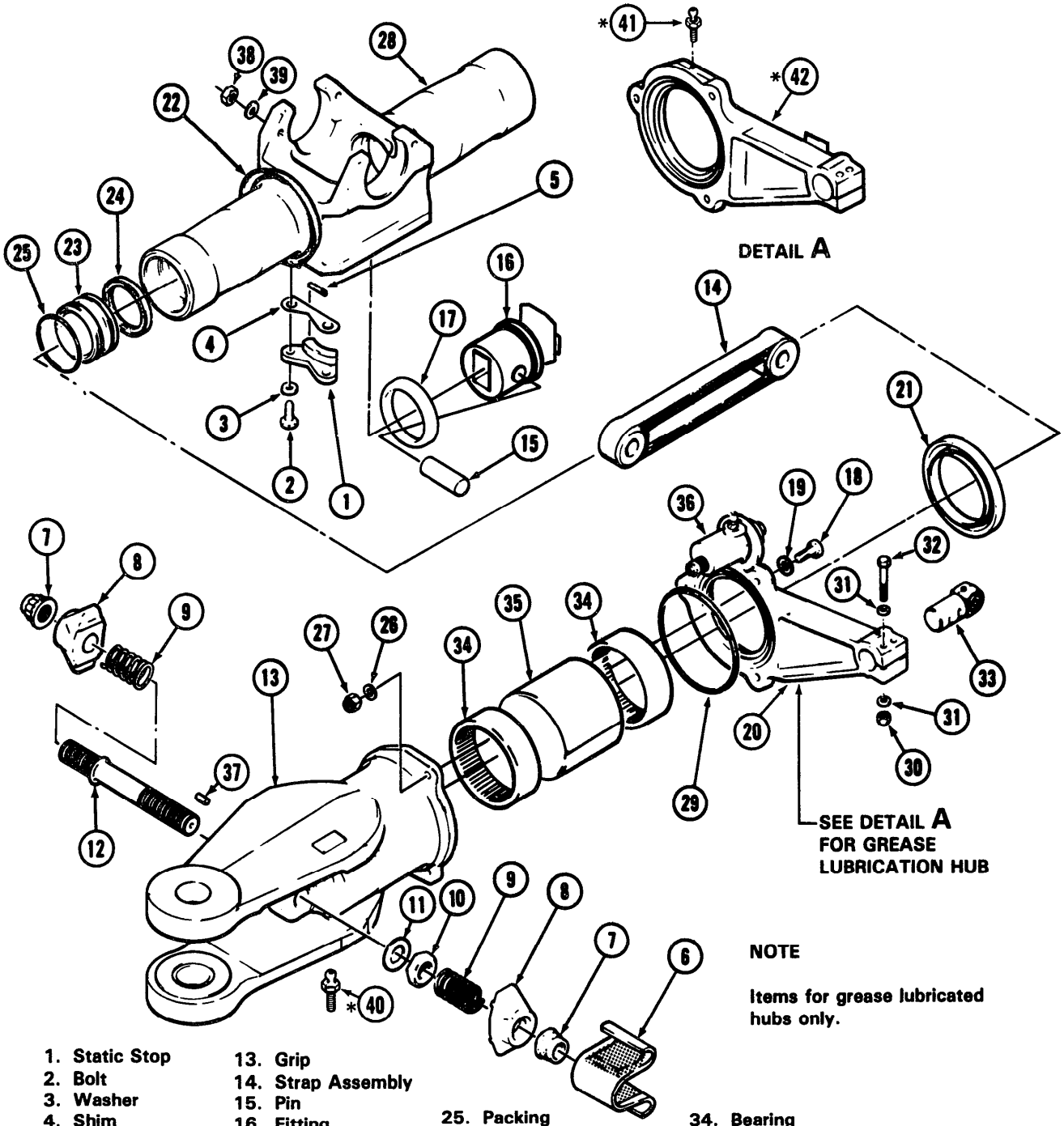

1. Static Stop
2. Bolt
3. Washer
4. Shim
5. Stop
6. Cover
7. Nut
8. Latch Retainer
9. Spring
10. Nut
11. Washer
12. Bolt Assembly
13. Grip
14. Strap Assembly
15. Pin
16. Fitting
17. Ring
18. Bolt
19. Washer
20. Pitch Horn
21. Seal
22. Hub Shield
23. Retainer
24. Seal
25. Packing
26. Washer
27. Nut
28. Yoke
29. Packing
30. Nut
31. Washer
32. Bolt
33. Trunnion Assembly
34. Bearing
35. Spacer
36. Reservoir
37. Pin
38. Nut
39. Washer
*40. Grease Fitting (See Note)
*41. Relief Valve (See Note)
*42. Pitch Horn (See Note)

206011-262

Figure 5-12. Replacement of Main Rotor Hub Grip Seals and Bearings

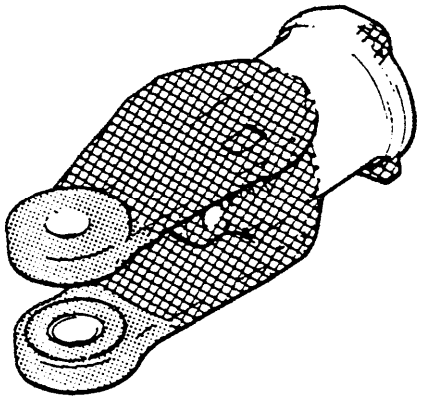

DAMAGE LOCATION SYMBOLS

206011-263

TYPE OF DAMAGE	DAMAGE LOCATION SYMBOLS		
	MAXIMUM DAMAGE AND REPAIR DEPTH		
MECHANICAL DAMAGE	0.010 in. before and after repair	0.020 in. before and after repair	0.030 in. before and after repair
CORROSION DAMAGE	0.005 in. before and after repair	0.010 in. before and after repair	0.015 in. before and after repair
MAXIMUM AREA PER FULL DEPTH REPAIR	See Note 1	1.000 sq. in.	Not Critical
NUMBER OF REPAIRS	Not Critical	Not Critical	Not Critical
EDGE CHAMFER TO REMOVE DAMAGE	0.020 in. before and after repair	0.040 in. before and after repair	0.060 in. before and after repair
BOLT HOLD AND BORE DAMAGE	0.002 in. for 1/4 circumference		See Note 2

NOTES:

1. Area of repair on surfaces mating with blade should not exceed one-half of any quadrant.
2. Maximum I.D. of blade bolt holes 1.525 in., maximum I.D. of strap retaining bolt holes 0.880 inch.
3. No cracks are permitted in any areas.
4. All dimensions are in inches.
5. Main rotor grip bearing surface (I.D.) not to exceed 4.005 in.

Figure 5-13. Main Rotor Grip — Damage Limits

1. Packing 568-331S59
2. Excluder S30769
3. Original Seal Assembly S30128-332G5
4. Retainer 206-011-129-3
5. Retainer 206-011-129-1
6. Original Retainer 206-010-107-1
7. Packing MS29561-230

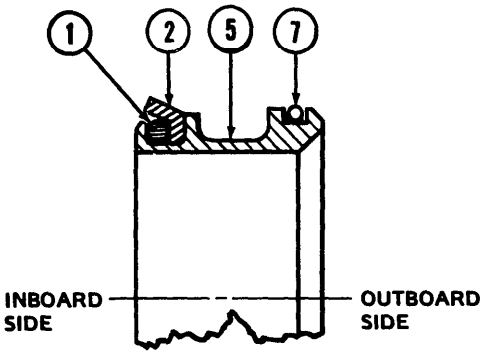

LATER
OIL LUBRICATED HUB

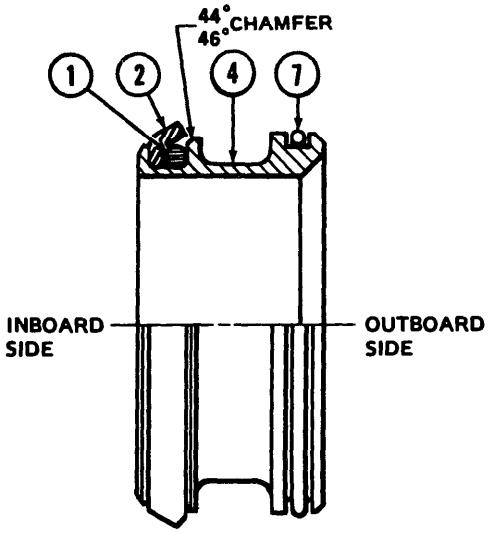

CURRENT
GREASE LUBRICATED HUB

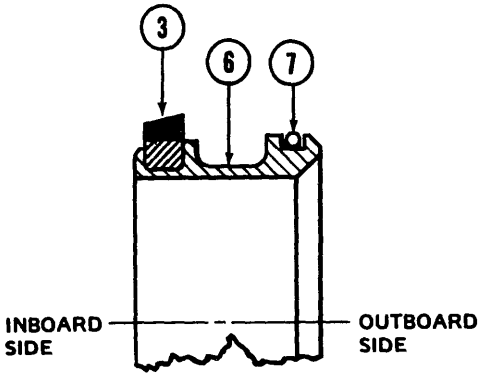

ORIGINAL
OIL LUBRICATED HUB

NOTE

Original retainer (6) and seal (3) should be used together. Do not mix with later configuration parts. See text for specific information.

206011-264

Figure 5-14. Main Rotor Seal (Outboard) Retainer Assembly

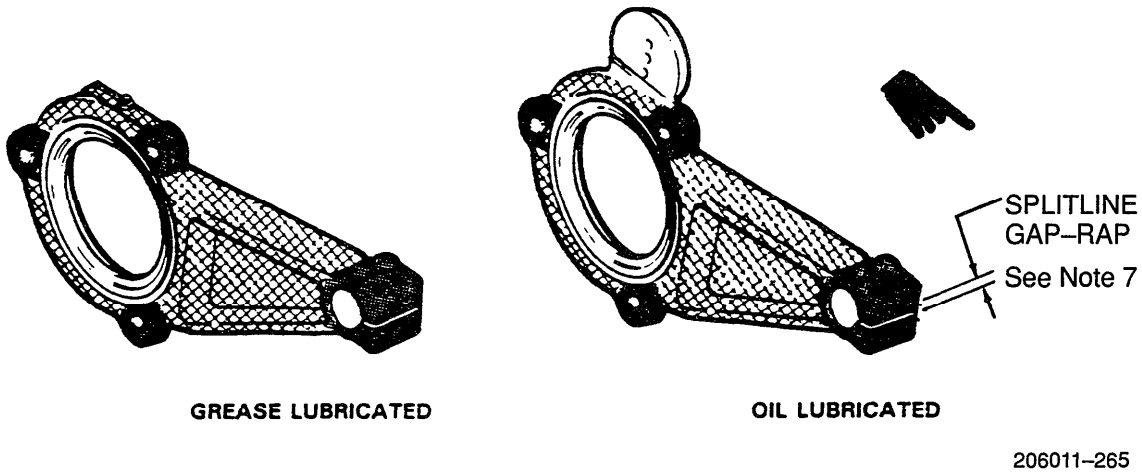

	AREA A	AREA B	AREA C
TYPE OF DAMAGE	MAXIMUM DEPTH		
NICKS, SCRATCHES, SHARP DENTS	0.010	0.030	0.060
CORROSION	0.005	0.015	0.030
EDGE OR CORNER DAMAGE	0.030	0.060	0.060

Notes:

1. Area A is restricted to one pair per lug. Minimum radius of repair is 0.050 inch.
2. Area B may have two repair areas on the arm and one on each segment between pitch horn to grip lugs. Minimum radius of repair is 0.350 inch.
3. Any damage and/or subsequent cleanup to sealing surfaces of reservoir, mount, and inboard grip seal, requires flush and flat surface to prevent possible leakage.
4. Repair areas must be coated with chemical conversion coating (C38) followed by primer (C116).
5. No cracks permitted.
6. All dimensions are in inches.
7. Maximum allowable 0.120 inch.

Figure 5-15. Inspection and Repair Limits — Pitch Horn — Main Rotor

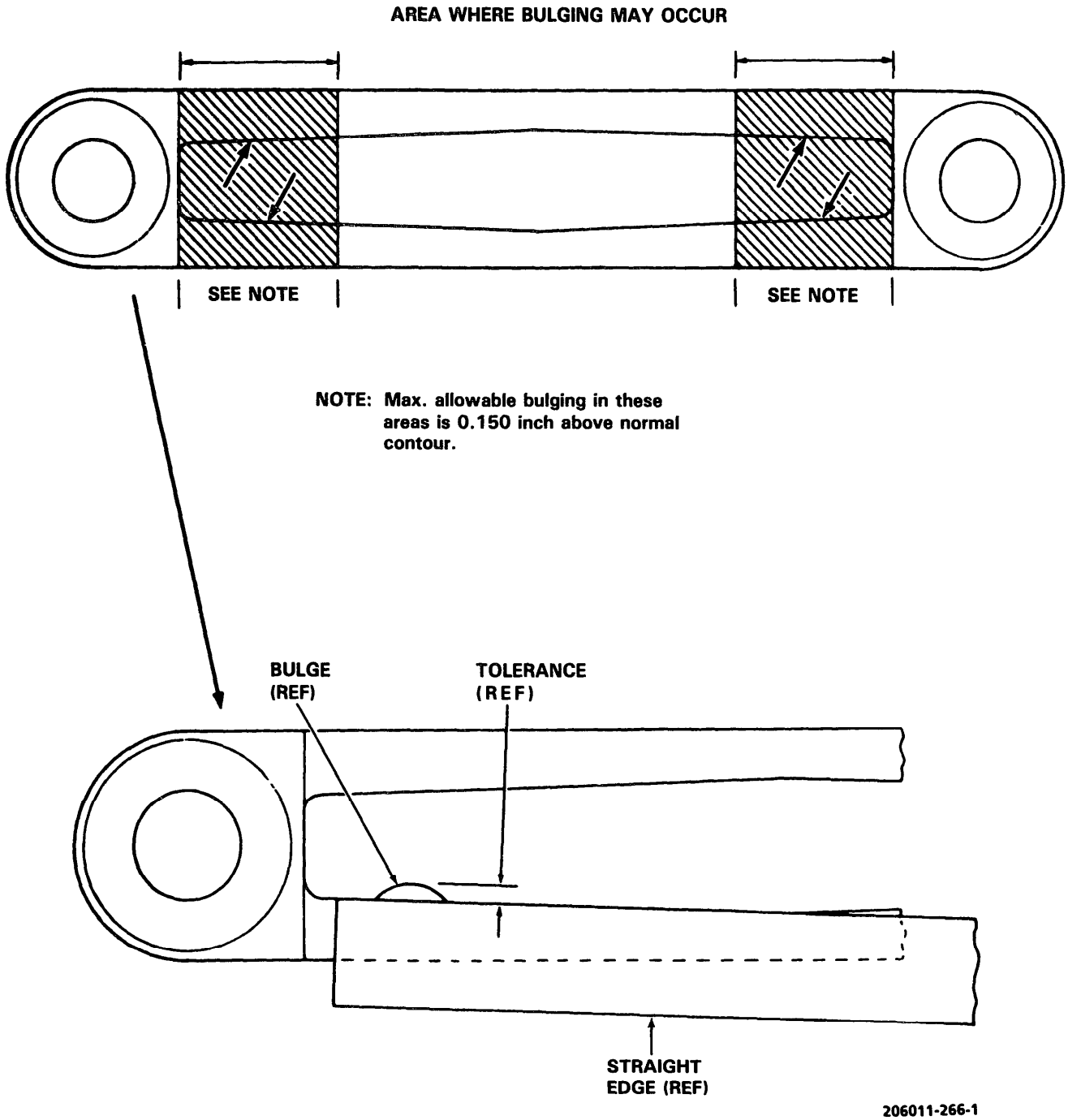

Figure 5-16. Torsion — Tension Strap (Sheet 1 of 2)

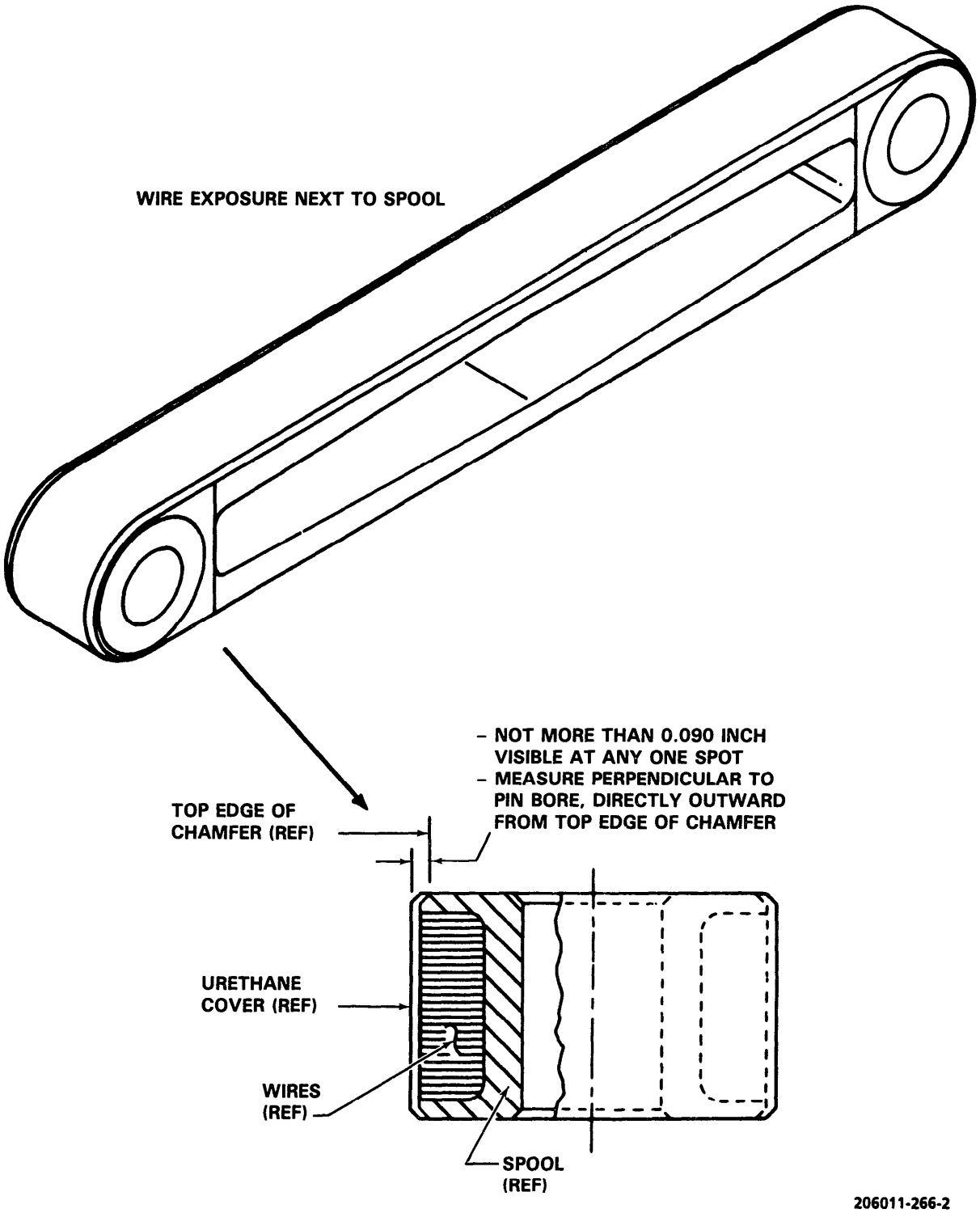

206011-266-2

Figure 5-16. Torsion — Tension Strap (Sheet 2 of 2)

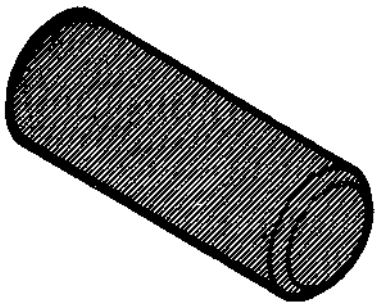

206011-267

DAMAGE AREA

TYPE OF DAMAGE	MAXIMUM DEPTH
SCRATCHES THROUGH CORROSION PROTECTIVE COATING	None Allowed
FLAKING OF CORROSION PROTECTIVE COATING	None Allowed
CORROSION PROTECTIVE COATING WORN THROUGH AT ANY POINT	None Allowed
EVIDENCE OF CORROSION	None Allowed
CRACKS	None Permitted

Figure 5-17. Inspection and Repair Limits — Main Rotor Hub Pin

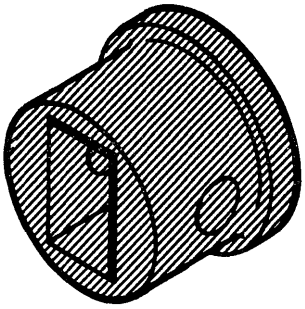

206011-268

TYPE OF DAMAGE	DAMAGE AREA MAXIMUM DEPTH
NICKS, SCRATCHES, SHARP DENTS	0.002
CORROSION	0.002
MAXIMUM AREA PER FULL DEPTH REPAIR	0.250 Inch Square
NUMBER OF REPAIRS	One Inside and One Outside
EDGE CHAMFER	0.020
BORE DAMAGE	0.0005 For 1/4 Circumference

NOTES:

1. No cracks are permitted.
2. All dimensions are in inches.

Figure 5-18. Inspection and Repair Limits — Main Rotor Hub Fitting

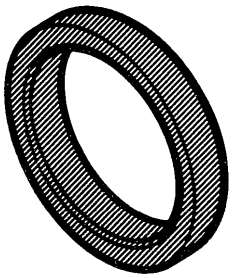

206011-269

TYPE OF DAMAGE	DAMAGE AREA MAXIMUM DEPTH
NICKS, SCRATCHES, SHARP DENTS	0.002
CORROSION	0.002
NUMBER OF REPAIRS	Two
EDGE CHAMFER	0.010

NOTES:

1. Coat repaired areas with chemical conversion coating (C38)
2. All dimensions are in inches.

Figure 5-19. Inspection and Repair Limits — Main Rotor Hub Ring

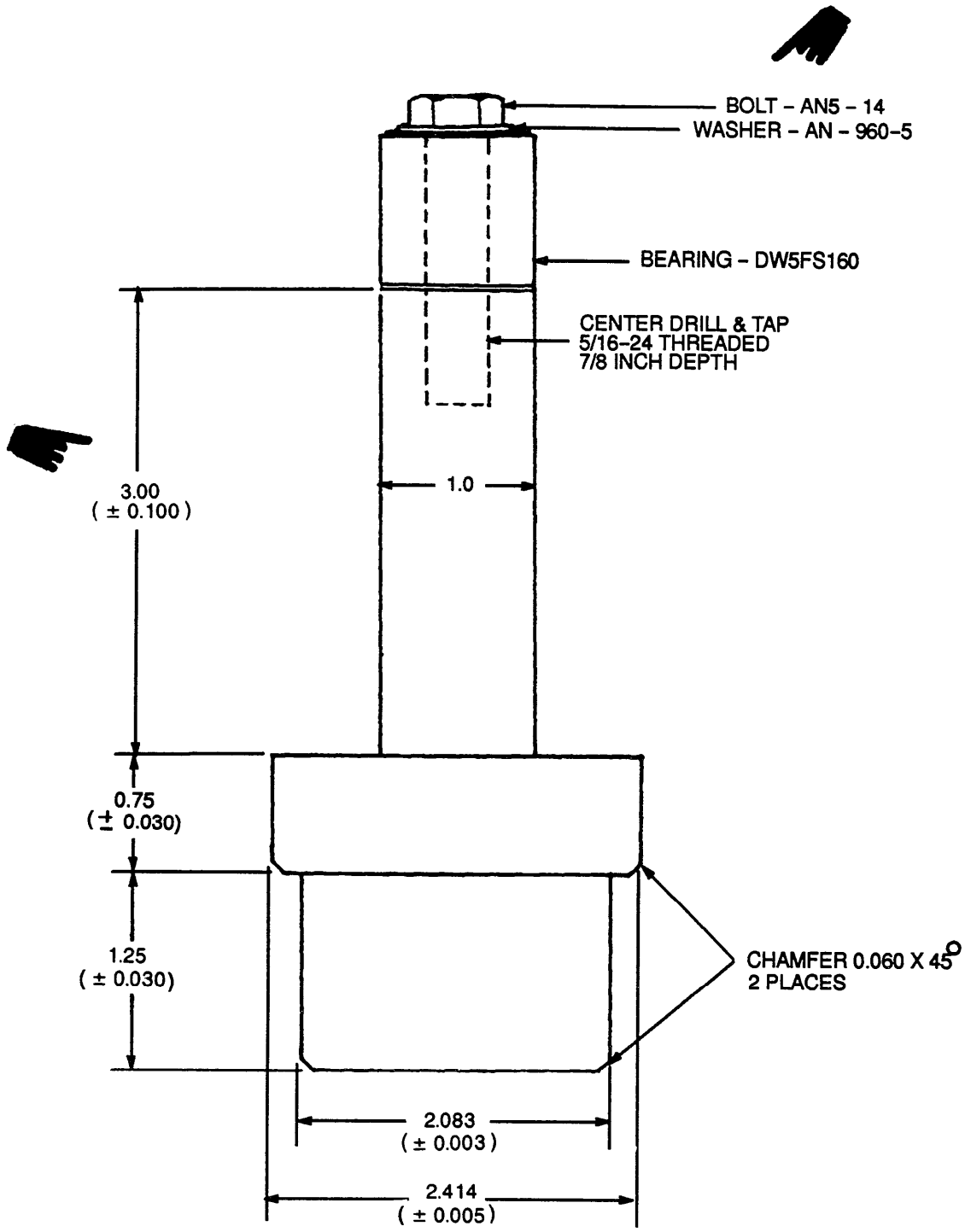

NOTE: MAKE WORK - AID FROM ALUMINUM BAR STOCK

Figure 5-20. Modified Work-Aid for Trunnion Centering

b. The alternate method for trunnion centering will consist of using main rotor mast work-aid P/N 206-010-332. Refer to Figure 5-21.

(1) To satisfactorily adjust trunnion friction, refer to paragraph 5-42 steps b (1) thru b (7).

(2) Mount yoke on main rotor mast work aid (P/N 206-010-332).

(3) Position a combination square on bottom outboard edge of yoke (in plane parallel to chordwise axis). Refer to figure 5-21.

(4) Measure gap with feeler gage between blade square and mast. Record reading.

(5) A maximum, tolerance of 0.003 is allowed to properly center trunnion on pitch axis.

(6) If trunnion centering is not within limits, adjust setscrews (8) alternately and equally until limits are satisfied.

NOTE

Ensure that the trunnion friction load and trunnion centering requirements are satisfied before returning rotor hub to serviceable status.

(7) After trunnion adjustment procedures are completed, refer to paragraph 5-42, substeps 5-42.b.13 thru b.17.

5-43. REMOVAL — TRUNNION — MAIN ROTOR (AVIM).

a. Remove main rotor hub assembly. Refer to paragraph 5-8.

b. Remove main rotor blades. Refer to paragraph 5-100.

CAUTION

Bearing (11, figure 5-4) and bearing inner race (15) become separated when pillow block (6) is removed from yoke. Ensure bearing (11) and inner race (15) are mated to the same side, when pillow block (6) is removed and installed.

c. Remove nuts (5), washers (4), bolts (1), bushings (3), and washers (2), cut lockwire and remove filler plug (13). Remove and discard packing (14). Slide pillow block (6) off trunnion; repeat process to remove pillow block from opposite side.

d. To avoid contamination of bearing (11) in pillow blocks (6), cover with barrier paper (C26) or equivalent.

e. Remove screws (26, Figure 5-4) and washer (17).

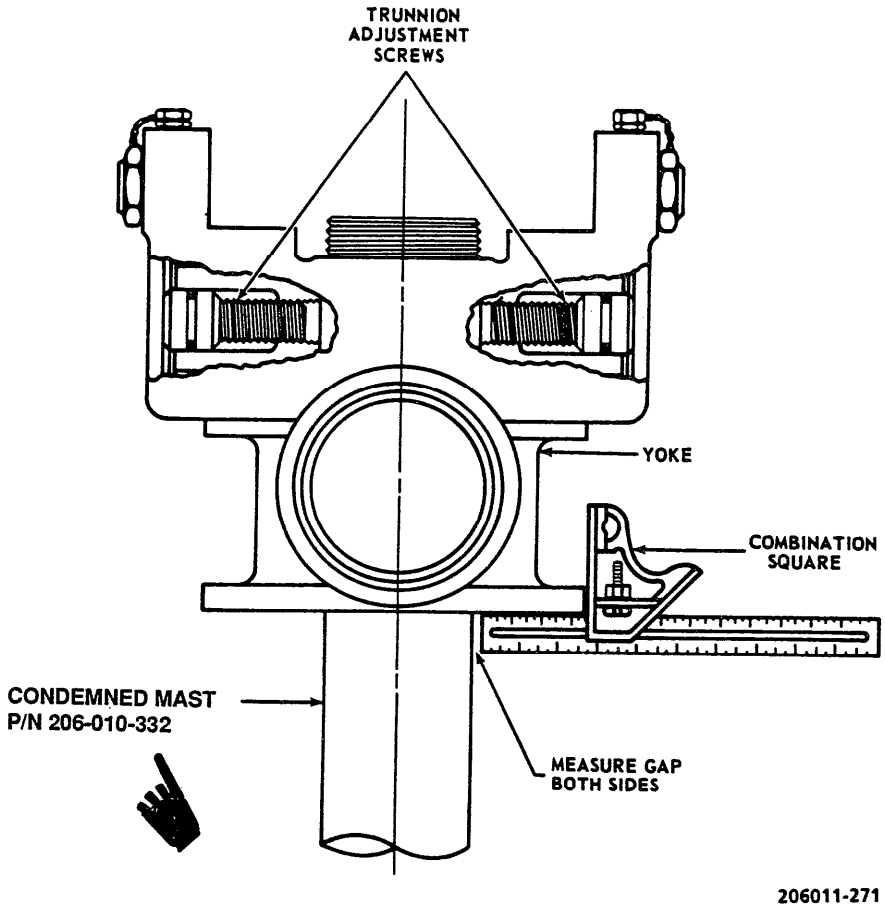

Figure 5-21. Main Rotor Hub Trunnion Centering

5-44. DISASSEMBLY — TRUNNION — MAIN ROTOR (AVIM).

a. Turn adjusting setscrews (8, figure 5-4) to push thrust washers (9) out of trunnion (7). Remove adjusting setscrews (8) by continuing to turn in same direction.

NOTE

If replacement of bearing (11) is not required, omit substeps b.(1) thru b.(5).

b. Remove inner bearing race (15) from trunnion (7) as follows:

(1) Remove sealant from trunnion spindle on inboard side.

(2) Install bearing puller attachment (T46) between trunnion (7) and inboard face of inner bearing race (15). See figure 5-5.

(3) Fabricate a pressing sleeve work aid (figure 5-22) that will clear the inner bearing race (15) inner diameter

(4) Place pulling attachment on a hydraulic press or equivalent. See figure 5-5.

CAUTION

Ensure that bearing pulling attachment edges do not contact trunnion spindle during pressing operation.

(5) Install fabricated pressing sleeve work aid on trunnion spindle and apply pressure to pressing sleeve work aid. Ensure that trunnion (7, figure 5-4) is not allowed to drop when trunnion separates from bearing inner race (15).

5-45. CLEANING — TRUNNION — MAIN ROTOR (AVIM).

a. Clean trunnion (7), setscrews (8), thrust washers (9), bearing inner race (15), washer (17), and bushings (3) with aliphatic naphtha (C22).

b. A soft fiber bristle brush (C31) may be used to scrub parts for cleaning.

NOTE

If circumstances prevent parts to be assembled and reinstalled with 72 hours of cleaning, coat with corrosion preventive (C72) and cover with barrier paper (C26) or equivalent.

5-46. INSPECTION — TRUNNION — MAIN ROTOR (AVIM).

a. Inspect trunnion (7, figure 5-4) in accordance with figure 5-3. If crack on the trunnion is suspected, refer to TM 1-1520-254-23, Technical Manual Aviation Unit Maintenance (AVUM) and Aviation Intermediate Maintenance (AVIM) Manual Nondestructive Inspection Procedures for OH-58 Helicopter Series.

b. Damage or wear to bearing inner race (15, figure 5-4) will result in replacing the bearing assembly (11).

c. Damage, wear, or cracking on thrust washer (9) will warrant replacement.

d. Damage or wear on setscrew (8) will warrant replacement.

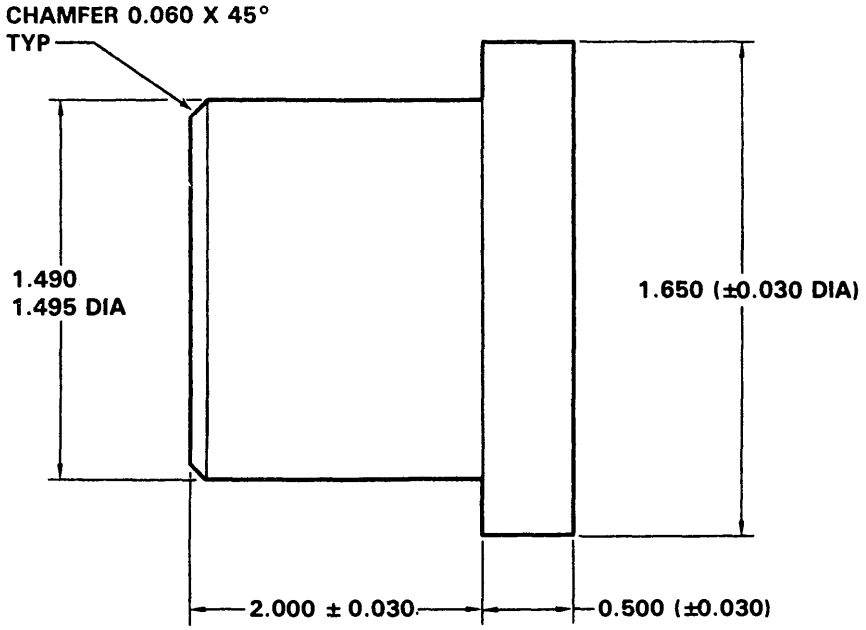

NOTE: Make work-aid from aluminum bar stock.

206011-272

Figure 5-22. Work-Aid for Trunnion Spindle Inner Bearing Race Removal

e. Deleted.

5-47. REPAIR — TRUNNION MAIN ROTOR (AVIM). Repair trunnion (7, figure 5-4) in accordance with figure 5-3.

5-47.1. INSTALLATION/REPAIR — TRUNNION THRUST PLATES — MAIN ROTOR.

NOTE

Trunnion thrust plug wear plates may be installed on any main rotor head.

a. Trunnion thrust plates may be installed/maintained as follows:

(1) Locally fabricate wear plates P/N 206-010-159-101 per figure 5-4, sheet 3, detail D.

(2) Shorten thrust plug 0.1 inch per figure 5-4, sheet 3, detail E, (new P/N after modification is 206-010-110-105).

(3) Install and adjust as required per paragraph 5-48.

5-48. ASSEMBLY — TRUNNION — MAIN ROTOR (AVIM).

a. Seal center portion of hollow setscrew (8, figure 5-4) with sealing compound (C131). Ensure that sealant does not interfere with the wrenching action on either end.

b. Install setscrews (8) in trunnion (7) through bore of spindle.

NOTE

Steps c. (1) and c. (2) may be omitted if the bearing inner race (15) was not removed from trunnion (7) during disassembly.

c. Install bearing inner race (15) to trunnion spindle as follows:

(1) Heat inner bearing race (15) to a temperature not to exceed **275°F (135°C)**. Remove inner bearing race (15) from heat and press on trunnion. Check to ensure that outboard ends of race are flush with outboard ends of trunnion spindle. Repeat process for installing the opposite side bearing inner race.

(2) After trunnion (7) and bearing inner race have cooled to room temperature, assure that trunnion assembly is clean. Apply a bead of sealing compound (C131) around inboard end of bearing inner race (15).

CAUTION

Use of standard length plug/washer with the thrust plate may result in interference between the mast and the adjustment screw. Thrust plug 206-010-110-3 which is 0.810 inch long, must be used without wear plates. If wear plates are used the thrust plug 206-010-110-105 which is 0.1 inch shorter must be used. Local modification of the -3 to the -105 is permissible. See Figure 5-4.

d. Apply a light coat of grease (C77) to new packing (10), all surfaces of thrust washer/plug (9), wear plates, if used, and bores of trunnion (7). Install wear plates, if used, into outboard ends of trunnion between adjusting screw (8) and thrust (9). Install thrust washer/plug (9) into outboard ends of trunnion (7).

e. To install trunnion pillow blocks, refer to paragraph 5-84.

f. Deleted.

g. To adjust trunnion centering, refer to paragraph 5-42.

CAUTION

After installation of screws (26, Figure 5-4) use a straight edge to determine if screws protrude above surface of washer (17). If so, these screws are unserviceable and must be removed and replaced.

h. Install washer (17, Figure 5-4) and screws (26).

5-49. YOKE/SHIELD —MAIN ROTOR HUB.

5-50. DESCRIPTION — YOKE/SHIELD— MAIN ROTOR HUB. The yoke/shield contains assemblies which retain the blades inside the yoke and provides for changes in pitch angle.

5-51. REMOVAL — YOKE/SHIELD — MAIN ROTOR HUB.

a. Remove main rotor hub blade assembly in accordance with procedures listed in paragraph 5-8.

b. Remove blade in accordance with procedures listed in paragraph 5-100.

c. Remove grips in accordance with procedures listed in paragraph 5-16.

d. Remove main rotor hub strap/pin/fittings and rings in accordance with procedures listed in paragraph 5-33.

5-52. INSPECTION — YOKE/SHIELD MAIN — ROTOR HUB (AVIM).

a. Inspect yoke in accordance with figure 5-23. If crack on yoke is suspected, refer to TM 1-1520-254-23, Technical Manual Aviation Unit Maintenance (AVUM) and Aviation Intermediate Maintenance (AVIM) Manual Nondestructive Inspection Procedures for OH-58 Helicopter Series.

NOTE

False brinelling is a wear condition that occurs when rolling element bearings move back and forth through small angles. The lubricant is forced from under the ball or roller and metal-to-metal contact occurs, wear and fretting follow. False brinelling can appear similar to brinelling but most often exhibits two or three overlapping depressions under each rolling element.

(1) False brinelling is acceptable to a maximum depth of **0.0015** inch on main rotor yoke bearing journals. No limit as to number of false brinelling marks, or quadrant of locations. There should be no attempt to polish out the marks.

(2) Inspect depth of false brinelling by using a work aid similar to that shown in figure 5-22.1.

b. Inspect shield (22, figure 5-12) for cracks. Determine that sealing lip of shield is not bent or distorted. No cracks are allowed in the dust shield assembly.

5-53. REPAIR — YOKE/SHIELD — MAIN ROTOR HUB (AVIM).

a. Repair yoke as follows:

(1) To repair areas A and C of figure 5-23 use sandpaper (C126) and polish with crocus cloth (C55).

(2) To repair area B refer to Note 2 of figure 5-23.

b. Shield replacement procedures are as follows:

(1) Remove shield and sealant if required.

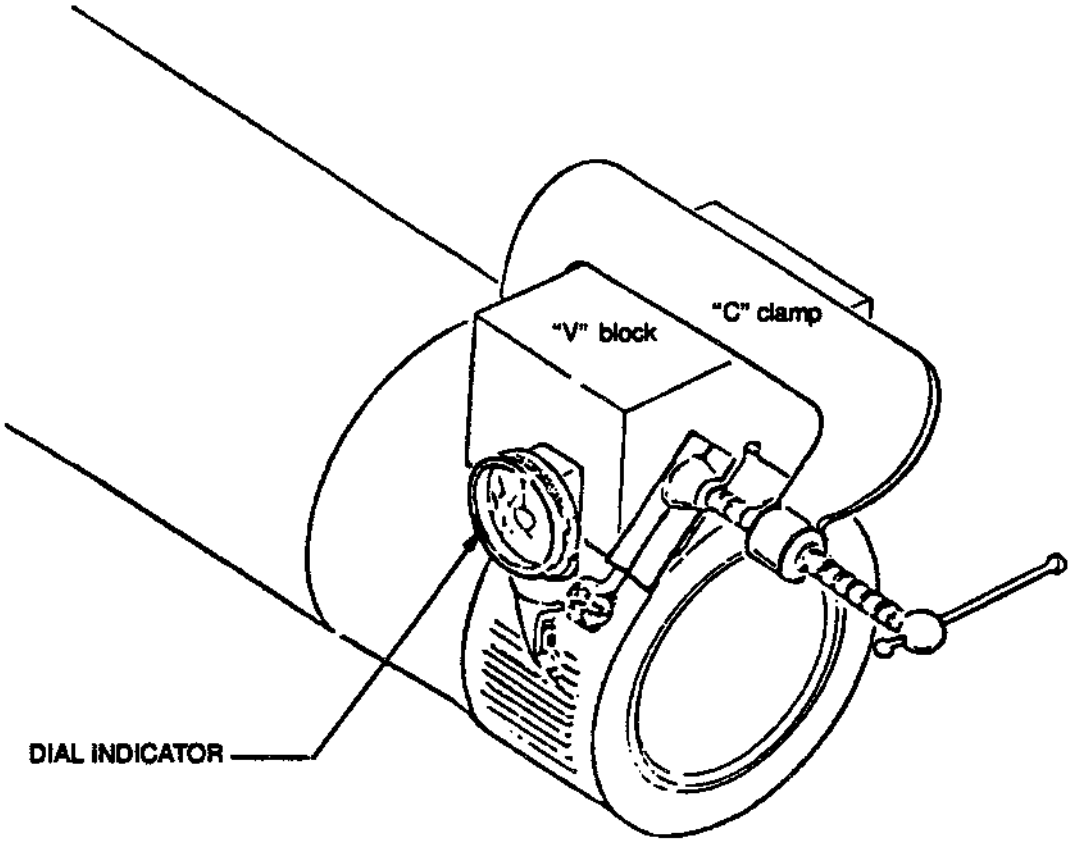

YOKE BRINELL DEPTH INSPECTION

Figure 5-22.1. Yoke Brinell Depth Inspection with Work Aid

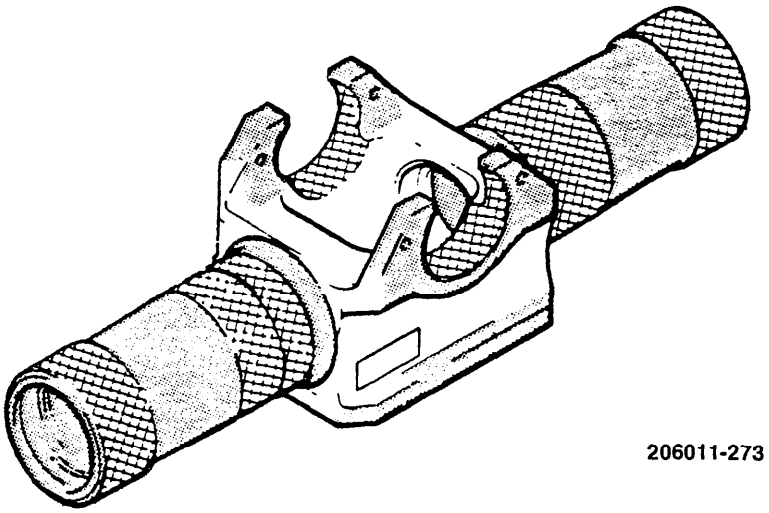

	AREA A	AREA B	AREA C
TYPE OF DAMAGE		MAXIMUM DEPTH	
NICKS, SCRATCHES, SHARP DENTS	0.010	See Note 2	0.020
CORROSION	0.005		0.010

NOTES:

1. Area A may have one repair per segment except the segment at the base of the yoke which may have two repairs per side. Minimum radius of repair is 0.350 inch.

2. Area B should not be damaged in excess of that removable with crocus cloth (C55). (Trunnion area will not be repaired.) Area B includes sleeve P/N 206-010-245-101. Bearing wear or corrosion wear cannot exceed 0.0015 inch.

3. Area C may have six repair areas. No repairs should overlap. Minimum radius of repairs is 0.350 inch.

4. All Repairs, except seal and bearing areas, will be coated with epoxy polyamide primer (C116).

5. No cracks permitted.

6.All dimensions are in inches.

Figure 5-23. Inspection and Repair Limits — Yoke — Main Rotor

(2) Install shield, on yoke as follows:

WARNING

Acetone is extremely flammable and toxic to eyes, skin, and respiratory tract. Wear protective gloves and goggles/face shield. Avoid repeated or prolonged contact. Use only in well-ventilated areas (or use approved respirator as determined by local safety/industrial hygiene personnel). Keep away from open flames, sparks, hot surfaces or other sources of ignition.

NOTE

Do not allow weight of yoke to rest on shield.

(a) Abrade shield lightly in area to be bonded with abrasive paper (C123), and wipe with cloth moistened with acetone (C2). Wipe dry with clean cloth. Clean bond area of yoke with acetone (C2) and wipe dry.

(b) Apply thin even coat of sealing compound (C131) to mating surface of shield and yoke and allow sealing compound to dry to a tacky stage (evidenced by adhering but not transferring to finger when touched).

(c) Install shield (lip facing outboard) on yoke and press parts firmly together. Ensure shield is seated firmly on yoke. Fair out sealant squeeze-out and air cure for a 4-hour minimum.

5-54. INSTALLATION — YOKE/SHIELD — MAIN ROTOR HUB (AVIM).

a. Install straps/pins in accordance with procedures in paragraph 5-36.

b. Install grips in accordance with procedures in paragraph 5-23.

c. Install blades in accordance with procedures in paragraph 5-106.

d. Install main rotor hub and blade assembly. Refer to paragraph 5-10.

5-55. BOLT AND BLADE LATCH RETAINER.

5-56. DESCRIPTION — BOLT AND BLADE LATCH RETAINER. Bolt and blade latch retainer provides the means of adjusting the blade latches for blade alignment.

5-57. INSPECTION — BOLT AND BLADE LATCH RETAINER. Inspect bolt and blade latch retainer for cracks, wear, corrosion, and security of mounting. Refer to figure 5-24. If crack on the bolt is suspected, refer to TM 1-1520-254-23, Technical Manual Aviation Unit Maintenance (AVUM) and Aviation Intermediate Maintenance (AVIM) Manual Nondestructive Inspection Procedures for OH-58 Helicopter Series.

NOTE

Blade latch retainer stops may contact wear pads in normal operation. No maintenance required if visual inspection reveals no obvious damage to retainer stops or wear pads that impair their function.

5-58. REMOVAL — BOLT AND BLADE LATCH RETAINER.

a. Remove main rotor assembly. Refer to paragraph 5-8.

b. Remove nut (7, figure 5-12), blade latch retainer (8) and spring (9).

c. Use socket wrench (T31) to remove nut (10) and washer (11).

d. Remove bolt (12), with remaining hardware.

5-59. REPAIR — BOLT AND BLADE LATCH RETAINER. Repair bolt and blade latch retainer in accordance with figure 5-24.

5-60. INSTALLATION — BOLT AND BLADE LATCH RETAINER. Install main rotor blades in accordance with paragraph 5-106.

WARNING

Aliphatic Naphtha is flammable and toxic to eyes, skin, and respiratory tract. Wear protective gloves and goggles/face shield. Avoid repeated or prolonged contact. Use only in well-ventilated areas (or use approved respirator as determined by local safety/industrial hygiene personnel). Keep away from open flames, sparks or other sources of ignition.

a. Clean inside diameter of strap bolt holes in grips with naphtha (C22) and dry. Corrosion preventive compound (C51) per para 5-13.

NOTE

Check minimum breakaway (frictional) torque for the metallic hexagonal selflocking nut (10). If minimum breakaway torque is less than specified in TM 1-1500-204-23-6, replace the nut.

b. Install bolt (12) through grip and strap with locking recess in bolt head mated to pin in grip. Clean corrosion preventive compound from threads of bolt (12) with naphtha (C22). Install washer (11) and nut (10). Torque nut to **180 FOOT-POUNDS** plus nut frictional torque using socket wrench (T31).

CAUTION

Replace fiber self-locking nuts (7) with new. Check minimum breakaway (frictional) torque

specified in TM 1-1500-204-23-6 upon installation.

NOTE

Ensure that there is no metal contact between the latch retainer prongs (8) and the main rotor blade wear pads prior to applying torque.

c. Install sprint (9) latch retainer (8), and nut (7). Torque nut (7) **75 TO 95 FOOT-POUNDS** plus frictional torque of nut on bolt measured prior to contact of nut to mating parts.

NOTE

After all adjustments have been completed, ensure the aft end of bolt (13, figure 5-11) has thread exposure as specified in TM 1-1500-204-23 beyond the self-lock element of nut (9).

d. Check alignment of hub blade assembly. Refer to paragraph 5-6.

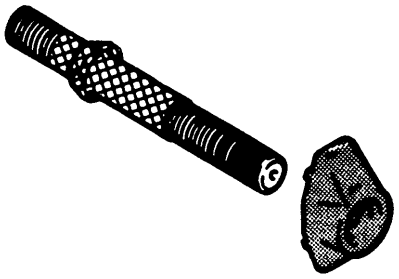

206011-274

TYPE OF DAMAGE	AREA A MAXIMUM DEPTH	AREA B MAXIMUM DEPTH
NICKS, SCRATCHES, SHARP DENTS	0.030	See Note 2
CORROSION	0.015	

NOTES:

1. Area A may have two repair areas. Minimum radius of repair is 0.350 inch. Accomplish repair using sandpaper (C126) and polish with crocus cloth (C55). Any repair to the latch retainer where there is contact with blade wear pad must be smooth and contoured to prevent possible damage to the wear pads.
2. Area B shall not have damage in excess of that which penetrates the bolt costing.
3. Raper of nicks and dents on the strap bolt threads should not exceed ONE THIRD OF THE THREAD DEPTH AND A LENGTH OF ONE THREAD.
4. Repairs on the blade latch retainer must be coated with epoxy polyamide primer (C116).
5. All dimensions are in inches.

Figure 5-24. Inspection and Repair Limits — Bolt and Blade Latch Retainer — Main Rotor

5-61. STATIC STOP — MAIN ROTOR HUB.

5-62. DESCRIPTION—STATIC STOP— MAIN ROTOR HUB. The static stop (figure 5-25) is a component of the main rotor hub which limits movement of strap fittings and provides contoured surface between mast and hub assemblies.

5-63. REMOVAL — STATIC STOP — MAIN ROTOR HUB.

a. Position blade up to gain access static stop.

b. Remove static stop (1, figure 5-12) by removing bolt (2), washer (3), shim (4), and stop (5).

5-64. INSPECTION—STATIC STOP— MAIN ROTOR HUB. Inspect static stop in accordance with figure 5-25. If a crack on the surface of the static stop is suspected, refer to TM 1-1520-254-23, Technical Manual Aviation Unit Maintenance (AVUM) and Aviation Intermediate Maintenance (AVIM) Manual Nondestructive Inspection Procedures for OH-58 Helicopter Series.

5-65. REPAIR — STATIC STOP — MAIN ROTOR HUB.

CAUTION

Contact of mast and wear plate on the static stop would cause damage to the mast.

NOTE

Make sure the plate and its adhesive squeeze-out do not enter the radius of the static stop (in the area where the stop contacts the mast). Contact of mast to adhesive squeeze-out will probably cause the plate to pop-off.

a. Repair using sand paper (C126) and polish with crocus cloth (C55).

b. Rebond wear strip on P/N 206-011-121-103 as follows:

WARNING

Acetone is extremely flammable and toxic to eyes, skin, and respiratory tract. Wear protective gloves and goggles/face shield. Avoid repeated or prolonged contact. Use only in well-ventilated areas (or use approved respirator as determined by local safety/industrial hygiene personnel). Keep away from open flames, sparks, hot surfaces or other sources of ignition.

(1) Remove old adhesive from static stop and wear strip. Clean bonding surfaces using clean cheesecloth (C37) moistened with acetone (C2). Wipe dry with clean cheesecloth (C37) prior to evaporation of acetone (C2).

(2) Bond wear plate to static stop using adhesive (C11).

5-66. INSTALLATION — STATIC STOP — MAIN ROTOR HUB.

a. Place shim (4, figure 5-12) on static stop (1).

NOTE

Use shims (4, figure 5-12) of correct thickness to provide 0.002 to 0.004 inch interference fit between static stop and fitting (16).

b. Apply a bead of sealing compound (C131) around exposed end of strap fitting (16) and mating surface of yoke (28). Ensure that strap fitting is fully seated when applying sealing compound. Do not permit sealing compound to contact radius ring or strap.

c. Position stop (5) on flat horizontal surface of fitting (16) and install static stop (1) with bolts (2) and washers (3).

CAUTION

Ensure static stop (1, figure 5-12) has been properly shimmed for tight fit with 0.002 to 0.004 inch interference fit, and is properly seated in place on fitting (16) prior to torquing of bolts (2). Refer to paragraph 5-66.

d. The stop adjustment must be accomplished when hub is installed on helicopter.

CAUTION

Static stops are never to be removed with M/R blades installed.

e. Check radius alignment of static stop with center of mast. If adjustment is necessary cut safties on stop bolts (2). Slightly loosen bolts, adjust torque bolts to 175 inch pounds and lockwire (C96) together.

f. Torque bolts (2) to **175 INCH-POUNDS** and lockwire (C96) together.

g. Repeat installation procedures for opposite static stop.

5-67. GRIP RESERVOIRS AND SIGHT GLASS — OIL LUBRICATED MAIN ROTOR HUB.

5-68. DESCRIPTION — GRIP RESERVOIR AND SIGHT GLASS — OIL LUBRICATED MAIN ROTOR HUB. Blade grips on the hub are lubricated with oil from grip reservoirs. Oil level can be checked through transparent covers and sight glasses.

5-69. INSPECTION — GRIP RESERVOIRS AND SIGHT GLASS — OIL LUBRICATED MAIN ROTOR HUB. Inspect sight glass for oil contamination. When water is present, the oil has a dirty milky appearance.

5-70. REMOVAL — GRIP RESERVOIRS AND SIGHT GLASS — OIL LUBRICATED MAIN ROTOR HUB.

a. Place wiping cloths under reservoir (13, figure 5-1) to catch excess fluid.

b. Remove nut (9), spring washer (10), washer (11), and packing (12).

c. Remove bolt (18) and packing (17). Remove reservoir (13), sight glass (16), and packings (15).

5-71. INSPECTION — GRIP RESERVOIRS AND SIGHT GLASS — OIL LUBRICATED MAIN ROTOR HUB.

a. Inspect sight glasses for nicks, cracks, and scratches. Replace defective parts.

b. Inspect for leaks between reservoir (13, figure 5-1) and pitch horn.

c. Inspect seals for cuts and serviceability. Replace defective parts.

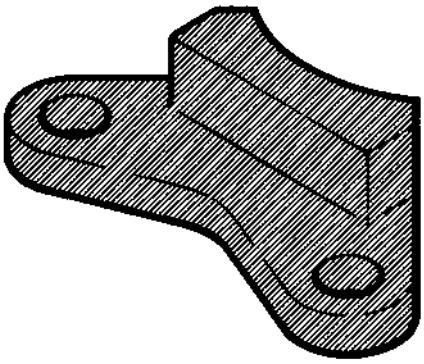

206011-275

DAMAGE AREA

TYPE OF DAMAGE	MAXIMUM DEPTH
NICKS, SCRATCHES, SHARP DENTS	0.020
CORROSION	0.010
MAXIMUM AREA PER FULL DEPTH REPAIR	Not Critical
NUMBER OF REPAIRS	Not Critical
EDGE CHAMFER	0.060

NOTES:

1. Coat repaired area with chemical conversion coating (C38) then apply epoxy polyamide primer (C116).
2. No cracks permitted.
3. All dimensions are in inches.

Figure 5-25. Inspection and Repair Limits — Main Rotor Hub Static Stop

5-72. REPAIR — GRIP RESERVOIRS AND SIGHT GLASS — OIL LUBRICATED MAIN ROTOR HUB. Repair is limited to replacement of unserviceable seals and sight glass with serviceable like items.

5-73. INSTALLATION — GRIP RESERVOIRS AND SIGHT GLASS — OIL LUBRICATED MAIN ROTOR HUB.

a. Position packing (15, figure 5-1) on reservoir (13) and packing (15) on sight glass (16); position reservoir and sight glass on pitch horn.

b. Install packing (17) on bolt (18) and insert bolt through sight glass and reservoir.

c. Install packing (12), washer (11), spring washer (10), and nut (9). Tighten nut until nut makes contact with spring washer, continue tightening nut one-half turn to slightly compress spring washer.

d. Fill reservoir at filler plug (14) with lubricating oil (C102). Work out air and fill one-half full level on sight glass (16). Install filler plug.

5-74. PILLOW BLOCK — MAIN ROTOR YOKE.

5-75. DESCRIPTION — PILLOW BLOCK — MAIN ROTOR YOKE. Oil lubricated hubs have pillow blocks with sight glass which provide for observing oil level in the pillow block reservoir. A filler plug is provided for filling the reservoir with oil. Grease lubricated hubs have a grease fitting which provides for servicing of the hub. The pillow block includes two bearings that are utilized with the flapping axis trunnion.

5-76. CLEANING — PILLOW BLOCKS — MAIN ROTOR YOKE.

a. Clean exposed portion of pillow block (6, figure 5-4) and associated parts with naphtha (C22).

b. A soft fiber bristle brush (C31) may be used to scrub parts for cleaning.

5-77. INSPECTION — PILLOW BLOCK — MAIN ROTOR YOKE.

WARNING

Inspect bolt (22, figure 5-4) P/N MS 21250-04018 for correct washer under bolt head. If washer (21) P/N MS9482-10 is not installed condemn and replace bolt (22), nut (25) and washer with correct configuration. Refer to paragraph 5-84.

a. Inspect exposed portions of pillow block (6, figure 5-4) in accordance with figure 5-28. If crack on the pillow block is suspected, refer to TM 1-1520-254-23, Technical Manual Aviation Unit Maintenance (AVUM) and Aviation Intermediate Maintenance (AVIM) Manual Nondestructive Inspection Procedures for OH-58 Helicopter Series.

b. Pitting caused by rust or corrosion on pillow block bolts is not acceptable. To replace, refer to paragraph 5-78.

c. Pitting caused by corrosion on pillow block sight glass assembly is not acceptable. To replace, refer to paragraph 5-78.

d. Inspect for oil discoloration forming a distinct line that may be mistaken for oil level, or oil level cannot easily be verified. If oil discoloration line has formed, replace sight glass and packing. Refer to paragraph 5-78.

e. Inspect sight glass for nicks, scratches, and crazing. To replace, refer to paragraph 5-78.

f. Inspect for leaks between sight glass and pillow block. If leaking, replace seal. Refer to paragraph 5-82.

g. Inspect for leaks between pillow block and trunnion. If leaking, replace seal. Refer to paragraph 5-79.

h. Inspect pillow block for cracks. If cracked, replace pillow block. Refer to paragraph 5-79.

i. If hub is grease lubricated, inspect grease fitting for clogs, cracks, corrosion, or damage. Replace defective parts. Refer to paragraph 5-84.

j. Inspect pillow block retention bolts (1 and 22) and nuts (5 and 25) for slippage. If slippage marks indicate that bolt or nut have moved condemn, replace bolt (1 or 22) and nut (5 or 25). Refer to paragraph 5-84.

5-78. REPAIR — PILLOW BLOCK — MAIN ROTOR YOKE.

a. Repair exposed portions of pillow block (6, figure 5-4) in accordance with figure 5-28.

WARNING

Installation torque of pillow block nuts depends on configuration.

b. Replace pillow block nuts (1 or 22) one at a time to avoid disturbing trunnion centering. Refer to paragraph 5-84 for specific requirements.

c. To replace pillow block sight glass, cut lockwire. Remove and replace sight glass (18, figure 5-4) and packing (19). Coat new packing (19) with oil (C102), install packing on sight glass, install sight glass on pillow block. Remove filler plug (13), discard packing (14) and service pillow block reservoir with oil (C102), to indicate one-half full on sight glass indicator. Install new packing (14) on filler plug (13). Coat packing (14) with oil (C102) and install on pillow block. Torque filler plug (13) **25 TO 35 INCH-POUNDS**. Torque sight glass (18) **30 TO 40 INCH-POUNDS** and lockwire (C96) from filler plug to sight glass.

5-79. REMOVAL — PILLOW BLOCK — MAIN ROTOR YOKE (AVIM).

a. Remove main rotor hub assembly. Refer to paragraph 5-8.

b. Remove main rotor blades. Refer to paragraph 5-102.

CAUTION

Bearing (11, figure 5-4) and bearing inner race (15) become separated when pillow block (6) is removed from yoke. Ensure bearing (11) and bearing inner race (15) are mated to the same side, when pillow block (6) is removed and installed.

c. Remove nuts (5 or 25), washers (21 or 4), bolts (1 or 22), bushings (3 or 23), and washers (2 or 21). Cut lockwire, remove filler plug (13) and discard packing (14) on oil lubricated hub. Slide pillow block off trunnion and repeat process to remove pillow block from opposite side.

d. To avoid contamination of bearing (11) in pillow blocks (6), cover with barrier paper (C26) or equivalent.

5-80. DISASSEMBLY — PILLOW BLOCK — MAIN ROTOR YOKE (AVIM).

a. Place pillow block (6) on a clean flat surface. Install bearing puller (T16) in pillow block to remove seal (12), refer to figure 5-26, for proper positioning of seal puller. Remove and discard seal (12, figure 5-4).

NOTE

If replacement of bearing (11) is not required, omit step b.

b. Remove pillow block bearing (11) as follows:

(1) Place pillow blocks (6) on a clean, flat surface with inboard face down. Apply heat lamp to outboard side of pillow block. Heat pillow block at a distance of **8 to 10** inches from lamp. Heat pillow block for a duration of **10 to 15** minutes using cotton gloves (C76) to prevent injury to hands; remove pillow block from heat lamp area a. Remove bearing (11) by tapping outboard side of pillow block with a rawhide mallet or equivalent, while holding pillow block suspended above work table.

(2) If pillow block bearing (11) was not completely removed using the above process, the bearing may be removed using puller (T16) as illustrated in figure 5-26.

c. Remove sight glass (18, figure 5-4) from pillow block. Remove and discard packing (19).

d. On grease lubricated hub remove grease fitting (20) only if replacement is required.

5-81. CLEANING — PILLOW BLOCK — MAIN ROTOR YOKE (AVIM).

a. Clean pillow block (6, figure 5-4) and bearing (11) with naphtha (C22).

b. A soft fiber bristle brush (C31) may be used to scrub parts for cleaning.

5-82. INSPECTION — PILLOW BLOCK — MAIN ROTOR YOKE (AVIM).

a. Inspect pillow block (6) in accordance with figure 5-28.

b. Pitting caused by rust or corrosion on pillow block bolts (1, figure 5-4) is not acceptable.

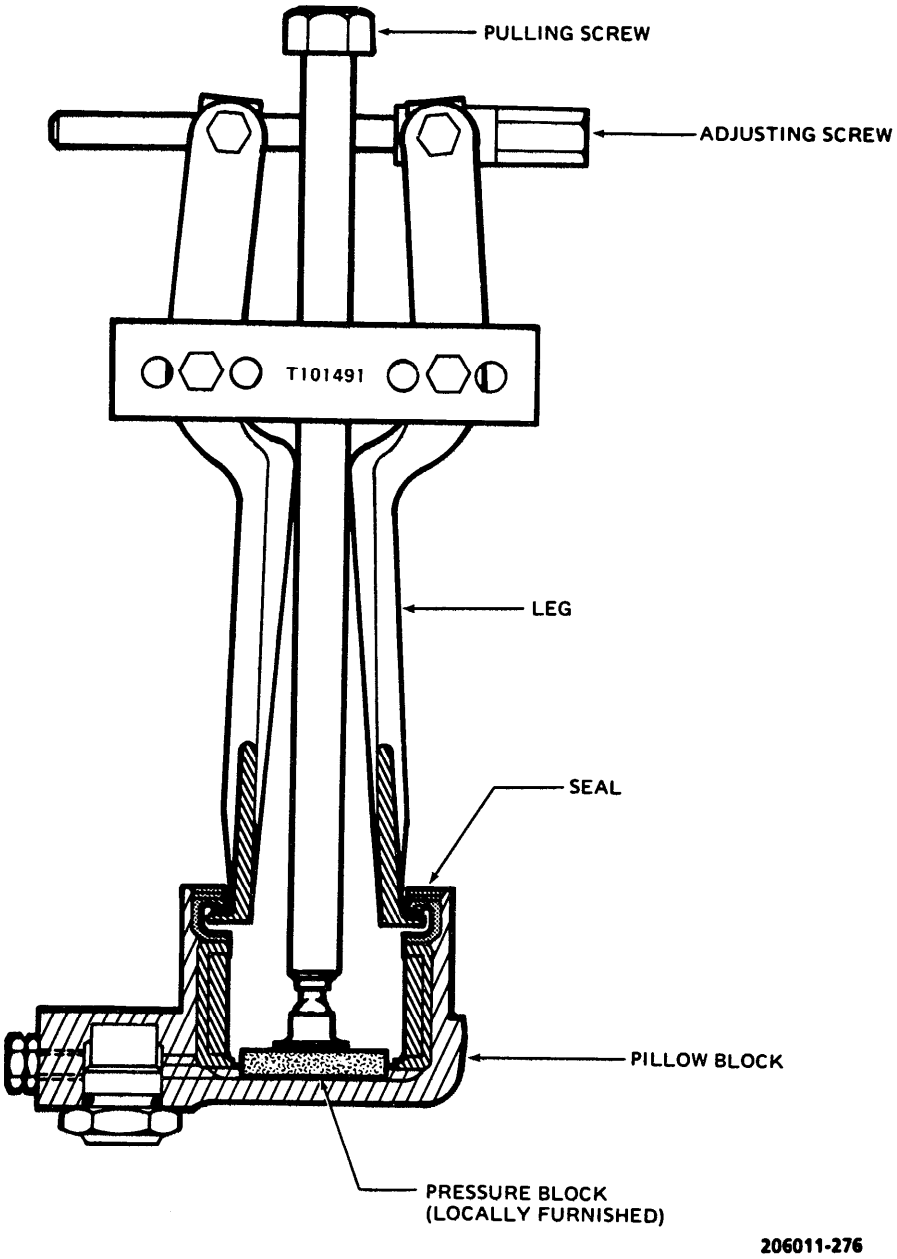

Figure 5-26. Removal — Pillow Block Seal

c. Pitting caused by corrosion on pillow block sight glass assembly is not acceptable.

d. Deterioration, breaks, wear-through, or cuts are not acceptable on pillow block teflon pads (16).

e. Inspect for oil discoloration forming a distinct line that may be mistaken for oil level, or oil level cannot be easily verified. If oil discoloration line has formed, replace sight glass and packing.

f. Inspect sight glass for nicks, scratches, and crazing.

g. Inspect for leaks between sight glass and pillow block. If leaking, replace packing.

h. Inspect for leaks between pillow block and trunnion. If leaking, replace seal.

i. Inspect pillow block for cracks. If cracked, replace pillow block.

j. If hub is grease lubricated, inspect grease fitting for clogs, cracks, corrosion, or damage. Replace defective parts. Refer to paragraph 5-84.

k. If used, inspect straight bushing (3) for worn or damaged plating and corrosion. Wear, damage, or corrosion which exceeds the plating thickness is not acceptable.

l. If used, inspect special washers (2) and bolts (1) for evidence of wear or interference between the washer I.D. and the radius under the bolt head. This condition is unacceptable and the bolts must be replaced. (This inspection is not required when flanged bushing (23) is used.) Replace washer if coating on face (next to pillow block) is visibly worn or damaged.

m. Inspect bushing (23) for worn or damaged epoxy coating on surfaces which contact the pillow block. Damage or wear to an extent which would permit metal-to-metal contact with the pillow block or prevent proper seating of the pillow block bolts is not acceptable.

5-83. REPAIR — PILLOW BLOCK — MAIN ROTOR YOKE (AVIM).

a. Replace defective sight glass or grease fitting per paragraph 5-84.

b. Replace defective teflon pads (16) per paragraph 5-84.

c. Repair damage per figure 5-28. Use sandpaper (C126) then polish with crocus cloth (C55). Apply chemical conversion coating (C38) then apply epoxy primer (C116) to repaired areas.

d. Pillow block wear discs may be installed as follows:

NOTE

Pillow block 206-011-102-117 is the same as 206-011-102-11 but has an integral stainless steel wear disc. Local incorporation of the wear disc is acceptable to repair worn pillow blocks or to improve serviceability on any rotor head.

(1) Remove, disassemble, clean, and inspect pillow block per para. 5-79 thru 5-82 (seal and bearing must be removed).

(2) Determine that depth of damage in thrust plug contact area does not exceed **0.030** inch. Pillow block must be scrapped if damage exceeds **0.030** inch after cleanup. Treat rework damage area with alodine.

(3) Locally fabricate wear disc 206-011-156-101 from **0.032** inch thick 1/4 hard 301 CRES (MIL-S-5059) per figure 5-4, sheet 4, detail F. Exact thickness (**0.025 to 0.035** inch acceptable) and material (any steel acceptable) are not critical within reason. Wear disc must be flat within **0.001** inch, free from burrs and sharp edges, and smooth (**32** micro-inch) on the side which contacts the thrust plug.

(4) Degrease the pillow block and wear disc to assure a good bond. Bond the disc in the pillow block thrust plug contact area using adhesive (C11). Do not build up excessive bond thickness and center the plate within **0.06** inch. Apply pressure with a C-clamp to assure a good bond. Remove adhesive squeeze out with a clean cloth. Allow adhesive to cure.

5-84. ASSEMBLY — PILLOW BLOCK — MAIN ROTOR YOKE (AVIM).

a. Ensure that center portion of hollow setscrews (8, figure 5-4) is sealed with sealing compound (C131).

b. Coat new packing (10) with lubricating oil (C102) and install on thrust washer (9) in spindle outboard end of trunnion (7).

CAUTION

Bearing (11, figure 5-4) and bearing inner race (15) become separated when pillow block (6) is removed from yoke. Ensure bearing (11) and bearing inner race (15) are mated to the same side, when pillow block (6) is removed and installed.

c. Install bearing (11) in pillow block as follows:

NOTE

If replacement of bearing (11) is not required, omit step c.

d. The use of a local manufactured work aid is recommended for installation of bearing inner race, see figure 5-27 for details. Place pillow block (6, figure 5-4) on a clean, flat surface with inboard face up. Apply heat lamp, at a distance of **8 to 10** inches from pillow block. Heat pillow block for a duration of **10 to 15** minutes using cotton gloves (C76) to prevent injury to hands; remove pillow block from heat lamp area. Place a wood block on hydraulic press base, and the pillow block on top of wood block. Place work aid (figure 5-27) in bearing and press bearing (11, figure 5-4) into pillow block (6). Ensure that bearing (11) is seated to bottom of pillow block (6) bearing cavity.

e. Install seal (12) in pillow block as follows:

(1) Apply a thin film of sealing compound (C131) to O.D. of seal (12) and I.D. of pillow block seal recess.

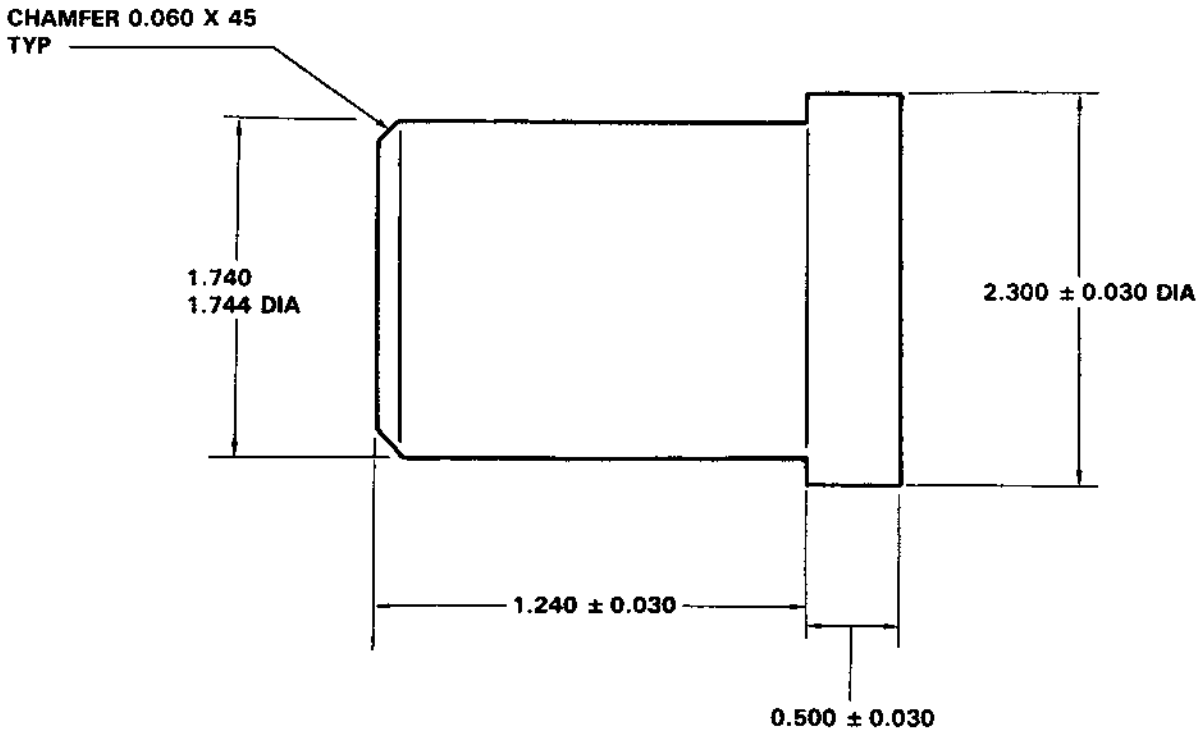

NOTES: Make work-aid from aluminum bar stock.
All dimensions are in inches.

206011-277

Figure 5-27. Work-Aid for Installing Bearing On Main Rotor Yoke Pillow Block

(2) On oil lubricated hub press seal (12) in pillow block with seal part number visible and backup spring toward bearing.

(3) On grease lubricated hub, press seal (12) in pillow block with seal lip visible (backup spring exposed) and seal part number towards bearing.

(4) Ensure seal is seated in recess and wipe off excess sealant.

(5) Apply a light coat of lubricant to bearing and lip of seal. Use oil (C102) for oil lubricated hub or grease (C77) for grease lubricated hub.

WARNING

Acetone is extremely flammable and toxic to eyes, skin, and respiratory tract. Wear protective gloves and goggles/face shield. Avoid repeated or prolonged contact. Use only in well-ventilated areas (or use approved respirator as determined by local safety/industrial hygiene personnel). Keep away from open flames, sparks, hot surfaces or other sources of ignition.

f. Prior to installing teflon pad (16), abrade pillow block pad surface with sandpaper (C126). Remove sanding residue with acetone (C2). Apply adhesive epoxy (C12) to faying surface of pillow block and teflon pad. Position pad on pillow block, using care to ensure alignment. Remove excess adhesive squeeze-out with cheesecloth (C37) moistened with acetone (C2).. Apply firm pressure to pad and cure adhesive for **24** hours at **70° to 95°F (21° to 35°C)**. An alternate cure method is to apply firm pressure to pad and heat pad area. The heat shall be from **145° to 155°F (63° to 68°C)** for **30** minutes.

CAUTION

Do not apply corrosion preventive compound to wear pads (16) or the mating surface of the yoke. Clean these surfaces prior to installation.

g. Prior to installing pillow block (6) to main rotor yoke, apply corrosion preventive compound (C50) on all faying surfaces of yoke and pillow block (6). Coat

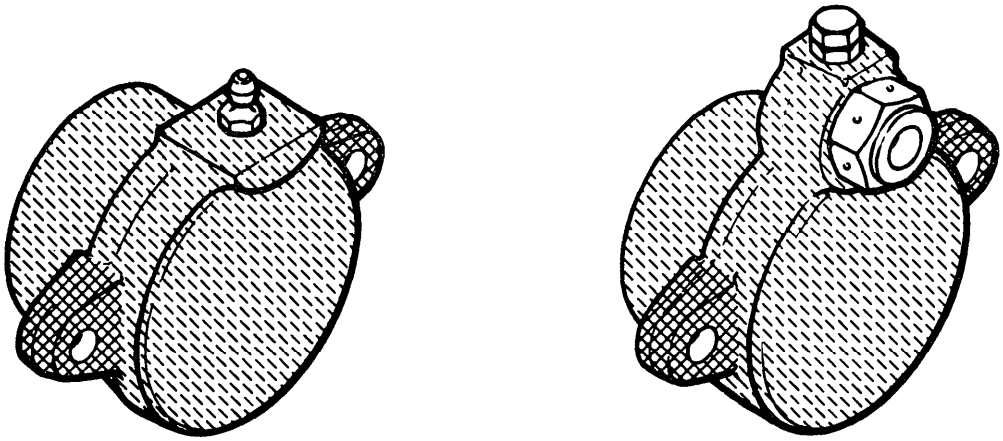

206011-278

GREASE LUBRICATED

OIL LUBRICATED

TYPE OF DAMAGE	MAXIMUM DEPTH AREA A	MAXIMUM DEPTH AREA B
NICKS, SCRATCHES, SHARP DENTS	0.010	0.030
CORROSION	0.005	0.015

NOTES:

1. Each lug is restricted to one repair area. Minimum radius of repair is 0.500 inch.
2. The cylindrical portion of area A may have two repair areas. Each repair should not exceed 0.250 inch square and must have a minimum radius of repair of 0.250 inch.
3. Area B may have one repair area. Minimum radius of repair is 0.350 inch.
4. Coat repair areas with chemical conversion coating (C38).
5. No cracks permitted.
6. No repair authorized in area under bolt head,
7. All dimensions are in inches.

Figure 5-28. Inspection and Repair Limits — Pillow Block — Main Reservoir

trunnion spindle bearing inner race (15) with a light coat of oil (C102) for oil lubricated hub or grease (C77) for grease lubricated hub. Place trunnion (7) in main rotor yoke between pillow block openings and carefully slide pillow blocks (6) into yoke openings and on each end of trunnion (7).

CAUTION

Bearing (11) and bearing inner race (15) become separated when pillow block (6) is removed from yoke. Ensure bearing (11) and bearing inner race (15) are mated to the same side, when pillow block (6) is removed and installed.

NOTE

After pillow blocks (6) are installed a bead of adhesive (C17) may be applied to pillow block at main rotor yoke mating surface to prevent corrosion.

a. Install pillow block retention hardware (High strength) as follows:

NOTE

Flanged bushing (23) P/N 206-011-128-1 replaces straight bushing (3) P/N 206-010-170-1 and washer (2) P/N 206-010-171-1. Bushing (23) may be used with standard (1, 4, and 5) hardware. It is recommended that bushing (23) and high strength (21, 22 and 25) hardware be used for reassembly.

(1) Install bushing (23) in pillow block (6).

WARNING

High strength bolt (22) P/N MS21250-04018 will be used only with countersunk washer (21) P/N MS9482-10 and high strength nut (25) P/N EB048. The same type hardware should be used at all four (4) locations on the main rotor hub. Before installing nuts make certain bolt and nut threads are clean, dry, free of burrs, lubricants, corrosion preventive compound, or paint.

(2) Install countersunk washer (21) on bolt (22). The countersunk washer (21) will always be used under the head of bolt (22).

(3) Install bolt (22) with washer (21) through bushing (23) and through pillow block (6) and yoke. Install washer (21) and nut (25) on bolt (22). Repeat procedure for other locations.

CAUTION

Check for proper grip length of bolt (22). Sufficient thread must be available to allow compression (0.020 inch maximum) of wear pad (16). If required, add one washer (4) P/N AN690-416 or AN690-416L under nut (25).

(4) Torque nut (25) P/N EB048 on bolt (22) P/N MS21250-04018 (12 point head) to **140 TO 150 INCH-POUNDS**.

(5) Apply slippage marks using torque seal lacquer compound (C47) or other suitable paint across bolt head and washer to pillow block and across bolt threads, nut, and washer to yoke.

b. Install pillow block retention hardware (standard) as follows:

NOTE

Flanged bushing (23, figure 5-4) P/N 206-011-128-1 replaces straight bushing (3) P/N 206-010-170-1 and washer (2) P/N 206-010-071-1. Bushing (23) may be used with standard (1, 4, and 5) hardware or high strength (21, 22 and 25) hardware. It is recommended that bushing (23) and high strength (21, 22 and 25) hardware be used for reassembly.

(1) Install straight bushing (3) or flanged bushing (23) in pillow block (6).

(2) Install washer (2) if used, on bolt (1).

NOTE

Washer (2, figure 5-4) is used only with straight bushing (3) and, when used, is to be installed with plastic face next to the pillow block.

(3) Install bolt (1) with washer (2), if used, through bushing (3 or 23) and through pillow block (6) and yoke. Install washer (4) and nut (5) on bolt (1). Repeat for other locations.

(4) Torque nut (5) P/N MS21042L4 on bolt (1) P/N NAS1304-13 to **55 TO 65 INCH-POUNDS**.

(5) Apply slippage marks using torque seal, lacquer compound (C47), or other suitable paint across bolt head and washer to pillow block and across bolt threads, nut, and washer to yoke.

c. Oil lubricated hub. Install new packing (19) to sight glass (18) coat packing with oil (C102) and install on pillow block. Torque sight glass assembly **30 TO 40 INCH-POUNDS**.

d. Grease lubricated hub. Install grease fitting (20) on pillow block. Apply unreduced primer (C116) to threads of grease fitting prior to installation.

e. Oil lubricated hub. Service pillow block reservoir with oil (C102), work out air by tipping rotor hub back and forth. Fill reservoir until sight glass indicates one-half full.

f. Oil lubricated hub. Install new packing (14) to filler plug (13), coat packing with oil (C102) and install on pillow block. Torque filler plug (13) **25 TO 35 INCH-POUNDS** and lockwire (C96) from filler plug to sight glass.

g. Grease lubricated hub. Lubricate pillow blocks with grease (C77) until grease is purged past seals.

h. Adjust trunnion centering. See paragraph 5-42.

5-85. MAIN ROTOR BLADE BOLT.

5-86. DESCRIPTION — MAIN ROTOR BLADE BOLT. The blade bolt (figure 5-29) secures the main rotor blades to the grip assemblies.

5-87. REMOVAL — MAIN ROTOR BLADE BOLT. Remove blade bolt in accordance with paragraph 5-100.

5-88. INSPECTION — MAIN ROTOR BLADE BOLT. Inspect the blade bolt in accordance with figure 5-29. If crack on the blade bolt is suspected, refer to TM 1-1520-254-23, Technical Manual Aviation Unit Maintenance (AVUM) and Aviation Intermediate Maintenance (AVIM) Manual Nondestructive Inspection Procedures for OH-58 Helicopter Series.

NOTE

If the blade bolt exceeds repair limits, or is otherwise damaged, it shall be replaced with a serviceable item.

5-89. REPAIR — MAIN ROTOR BLADE BOLT.

WARNING

Bolt repairs are not authorized if main rotor hub from which it was removed has been subjected to sudden or abrupt stoppage.

WARNING

Acetone is extremely flammable and toxic to eyes, skin, and respiratory tract. Wear protective gloves and goggles/face shield. Avoid repeated or prolonged contact. Use only in well-ventilated areas (or use approved respirator as determined by local safety/industrial hygiene personnel). Keep away from open flames, sparks, hot surfaces or other sources of ignition.

a. If a new bolt cannot be obtained, a replacement bolt from another hub assembly can be used after removing the dry film lubricant with acetone (C2). and performing the following inspection:

(1) Inspect bolt using magnetic particle method. Refer to TM 43-0103 (AVIM).

(2) Roll bolt on a surface plate to check for bending. The bolt shank should not be bent more than **0.0015** inch.

b. Remove scratches, scars, and nicks by polishing with crocus cloth (C55). Refer to figure 5-29 for additional repair procedures and limits.

c. Remove nicks and dents in bolt threads. For bolt thread measurement and repair, refer to TM 1-1500-204-23.

d. Install new blade bolt cap (18, figure 5-11) and packing (19).

e. Apply solid film lubricant (C105) to the bolt. Allow the lubricant to dry.

f. Balance main rotor blade.

5-90. INSTALLATION — MAIN ROTOR BLADE BOLT. Refer to paragraph 5-106 for blade bolt installation.

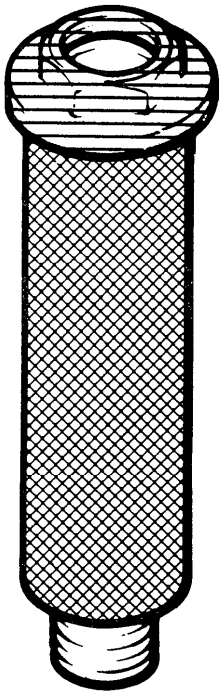

206011-279

	AREA A	AREA B
TYPE OF DAMAGE	MAXIMUM DEPTH	
NICKS, SCRATCHES, SHARP DENTS	0.010	See Note 2
CORROSION	0.005	

NOTES:

1. Area A may have one repair. Minimum radius of repair is 0.250 inch.
2. Scratches and scrapes on area B must not exceed that removable by polishing with crocus cloth (C55). After cleanup, recoat bolt with solid film lubricant (C105).
3. Repair of nicks and dents on the bolt threads must not exceed 1/3 of the thread depth. Length of the repair should not exceed 0.250 inch. The threads may have only two repair areas.
4. No cracks permitted.
5. Bolt will be inspected internally for pitting and plugged drain hole.
6. All dimensions are in inches.

Figure 5-29. Inspection and Repair Limits — Blade Bolt — Main Rotor

5-91. MAIN ROTOR PITCH HORN TRUNNION.

5-92. DESCRIPTION — MAIN ROTOR PITCH HORN TRUNNION. The pitch horn trunnion provides for changes in pitch to the main rotor blades.

5-93. INSPECTION — MAIN ROTOR PITCH HORN TRUNNION.

a. Check axial play between rod end bearing and barrel of trunnion (33, figure 5-12). Axial play is not to exceed **0.010** inch. Check general condition of trunnion.

b. Inspect barrel of trunnion assembly for damage.

5-94. REMOVAL — MAIN ROTOR PITCH HORN TRUNNION.

WARNING

Do not allow main rotor blades to rotate on pitch change axis. If blade is inadvertently allowed to rotate on this pitch change axis beyond 90 degrees, the main rotor grip retention strap must be replaced.

a. Index pitch link assemblies (1, figure 5-6) for reinstallation in same position. Remove bolt (5) and disconnect pitch link. Secure main rotor blade pitch horns to yoke with lockwire (C97) to prevent grips from turning on yoke.

b. Remove bolts (32, figure 5-12) securing trunnion assembly (33) to pitch horn.

CAUTION

Permanent deformation of pitch horn is prohibited. The temporary change in trunnion gap as a result of spreading must not exceed 0.034 inch.

NOTE

The splitline gap in the trunnion housing, with no trunnion or work aid in place, should not exceed 0.120 inch.

c. Remove trunnion assembly from pitch horn using a work aid to spread trunnion housing.

NOTE

Fabrication of work aid is recommended to allow removal and installation of trunnion with less possibility of damage to pitch horn. (See figure 5-30.) Insert tangs of tool into slot and tighten screw until trunnion can just be pulled out. Immediately release screw tension and remove tool.

Roller bearings in trunnion barrels may have a feel of ratcheting and drag in rotation, due to angular mounting.

5-95. INSTALLATION — MAIN ROTOR PITCH HORN TRUNNION.

a. Position trunnion in pitch horn using work aid (figure 5-30) and align slots in trunnion with holes in pitch horn. Install bolts (32, figure 5-12), washers (31), and nuts (30). Torque nuts to **50 TO 70 INCH-POUNDS**.

b. Lubricate trunnion in accordance with figure 1-5.

c. Position clevis end of pitch link assembly (1, figure 5-6) on trunnion. Install washer (4) under head of bolt (5) and install bolt through pitch link clevis and trunnion bearing with head of bolt inboard. Install one of two washers (4), as required, under nut (3) to locate nut for installation of cotter pin (2).

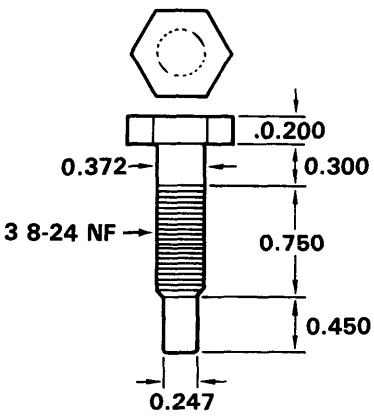

DETAIL 1
MAKE FROM STANDARD BOLT

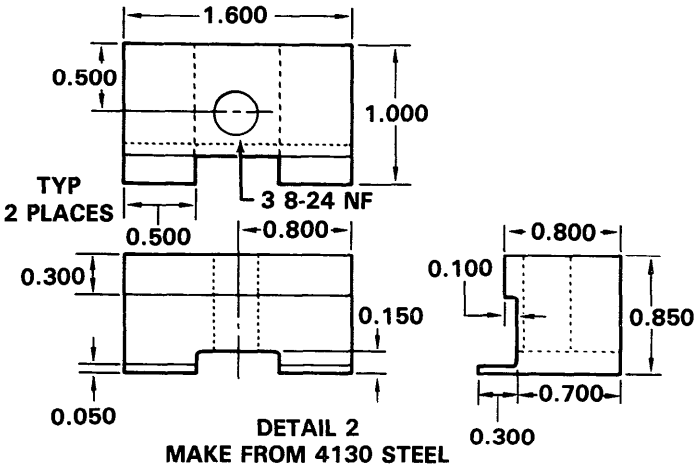

DETAIL 2
MAKE FROM 4130 STEEL

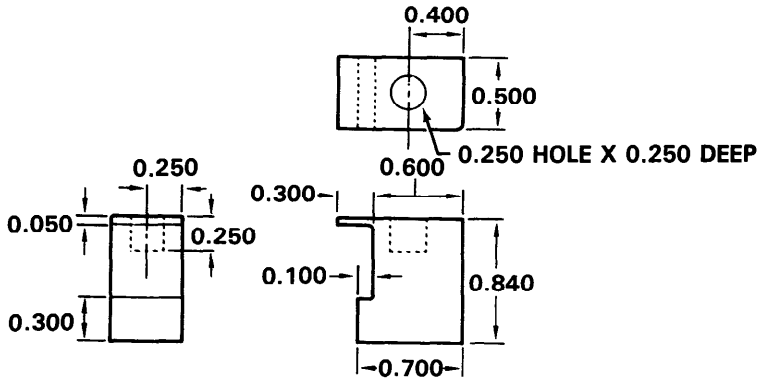

DETAIL 3
MAKE FROM 4130 STEEL

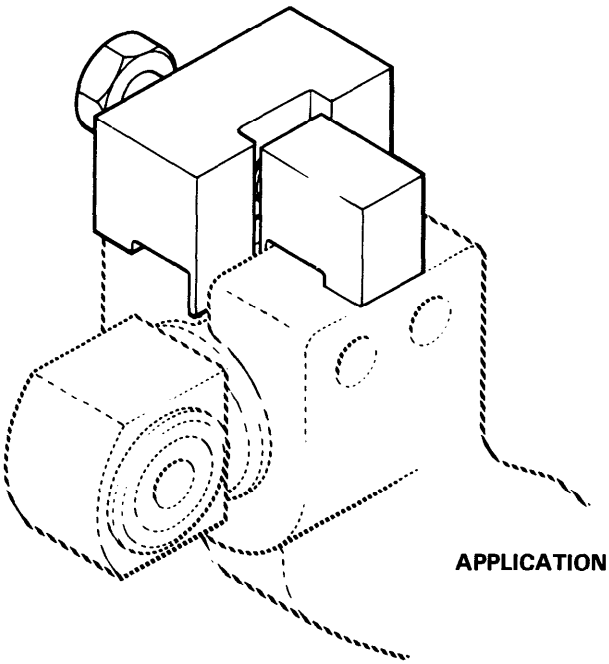

APPLICATION OF WORK AID

NOTE: All dimensions are in inches.

206011-280

Figure 5-30. Work Aid — Removal and Installation of Pitch Horn Trunnion

SECTION III. MAIN ROTOR BLADES

5-96. MAIN ROTOR BLADES.

5-97. DESCRIPTION — MAIN ROTOR BLADES. Main rotor blades are of all metal construction with an aluminum alloy honeycomb core, aluminum skins and nose block. All structural components are joined by metal-to-metal bonding. The blades are set in hub grips at a preconing angle and secured by a single retaining bolt in each grip. A trim tab is provided on the trailing edge for tracking adjustments.

5-98. CLEANING — MAIN ROTOR BLADES.

a. To maintain a protective coating as required, clean blades with aircraft cleaning compound (C43).

b. Thoroughly rinse with water and dry with clean cloths.

5-99. INSPECTION — ACCEPTANCE/REJECTION CRITERIA — MAIN ROTOR BLADE.

a. Inspect main rotor blades for scratches, nicks, dents, erosion of leading edge, and evidence of bond failures. In the event blades are damaged, refer to AVIM. If void damage is suspected, refer to TM 1-1520-254-23, Technical Manual Aviation Unit Maintenance (AVUM) and Aviation Intermediate Maintenance (AVIM) Manual Nondestructive Inspection Procedures for OH-58 Helicopter Series.

- — Under balance weight and support
- — Under grip pads
- — Under wear pads
- — Between skin and core
- — Between skin and trailing edge strip
- — Between skin and spar
- — Doublers
- — Within 0.250 inch from edge at the tip cap

b. Inspect around screw heads in area of inertia weights for cracks in paint and evidence of corrosion which is noticeable as blisters and/or raised areas in the paint. If cracks around screw heads in the area of inertia weights or in the area of the tip cap or cracks associated mechanical damage (i.e. sharp dents, scratches, etc.) are suspected, refer to TM 1-1520-254-23, Technical Manual Aviation Unit Maintenance (AVUM) and Aviation Intermediate Maintenance (AVIM) Manual Nondestructive Inspection Procedures for OH-58 Helicopter Series.

WARNING

Acetone is extremely flammable and toxic to eyes, skin, and respiratory tract. Wear protective gloves and goggles/face shield. Avoid repeated or prolonged contact. Use only in well-ventilated areas (or use approved respirator as determined by local safety/industrial hygiene personnel). Keep away from open flames, sparks, hot surfaces or other sources of ignition.

NOTE

A rattle-type noise may be detected in the blade tip when installed blades are shaken. This noise originates from movement of the tip weights installed on the blade tip balance weight supports and is considered normal.

c. Inspect for cracks in the tip cap area in the bond material at Station 208.07 (figure 5-31). If the paint is cracked, remove paint with a clean cloth dampened with acetone (C2) and fine crocus cloth (C55). Wash area thoroughly and inspect metal where paint was cracked. If tip cap is cracked, the blade assembly is unserviceable and will be forwarded for depot level maintenance.

WARNING

Acetone is extremely flammable and toxic to eyes, skin, and respiratory tract. Wear protective gloves and goggles/face shield. Avoid repeated or prolonged contact. Use only in well-ventilated areas (or use approved respirator as determined by local safety/industrial hygiene personnel). Keep away from open flames, sparks, hot surfaces or other sources of ignition.

CAUTION

Dye penetrant solutions and acetone (C2) will deteriorate bond material and corrode metal. Do not squeeze, move, or distort tip cap in any way for purpose of inspection.

d. If exposed bond material is cracked, check for voids by using a coin and tapping lightly along blade within 1/4-inch from edge (figure 5-31) and listen for a change in tone resulting from the tapping sound. A good bond will sound solid and tight, a void will sound hollow and empty. If a void does exist, the blade assembly is unserviceable and will be forwarded to depot level maintenance.

e. Edge voids in the area of station 208 (figure 5-31) not in excess of **0.120** inch are acceptable. Edge voids in the bond line on the tapered section of the tip cap not in excess of **0.080** inch are acceptable. Repair in accordance with repair procedures. Those blades which exceed **0.120** inch or **0.080** inch should be returned for depot maintenance. If cracks or corrosion are evident in the area of the inertia or tip weight screws, the blade assembly is unserviceable and will be forwarded for depot level maintenance.

f. Inspect for nicks, notches, scratches, and dents as follows:

(1) Nicks and scratches anywhere on the surface of skins or trailing edge strip that are not in excess of **0.008** inch in depth after polishing are acceptable.

(2) Nicks and scratches in the skins in excess of **0.008** inch in depth must be patched.

(3) Nicks or scratches in the doublers or grip plates that are not in excess of **0.012** inch in depth are acceptable if polished out. No nicks or scratches are allowed to either grip pads or wear pads. Normal wear is acceptable on wear pads.

(4) Nicks and notches in the extreme trailing edge of the blade that are **0.120** inch depth or less must be polished out over a distance of at least two

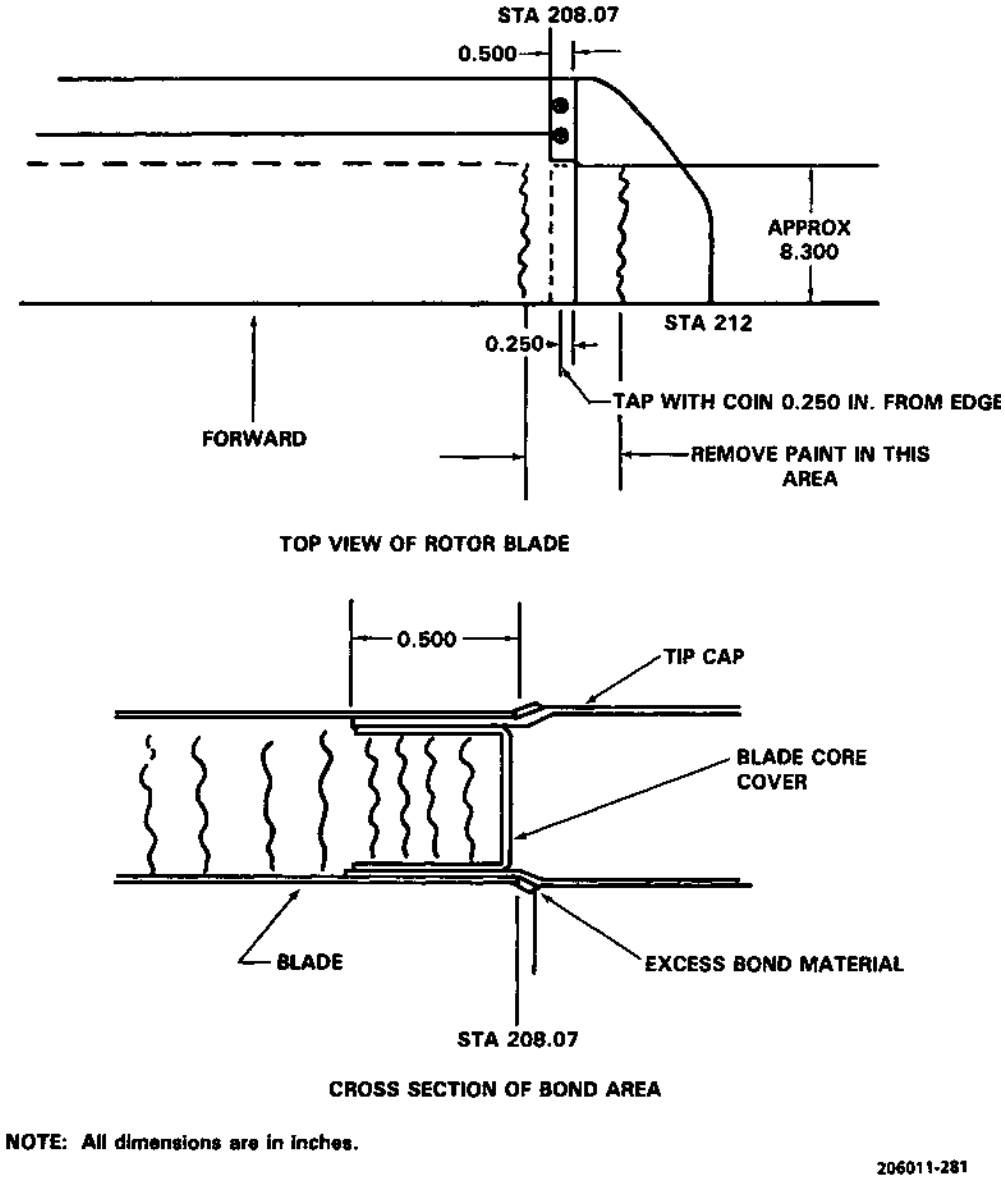

Figure 5-31. Main Rotor Blade — Bond Area Inspection

inches each side of the nick or notch. In the area outboard of the trim tab; a depth of **0.250** inch may be polished out over a distance of **4.000** inches on either side.

(5) In the outboard three feet of the blade, any dent in the skin that does not tear the skin, produce a void, or affect flight characteristics, is acceptable.

NOTE

The sound produced when tapping the tip cap area outboard of station 208.9 is hollow due to styrofoam filler material used in tip cap and does not indicate void.

(6) Dents in the skin inboard of a station three feet from the tip of the blade that are not in excess of **0.060** inch depth are acceptable.

(7) If a nick or scratch exists in a sharp dent in the skin, the total depth of both must not exceed **0.060** inch. If the nick or scratch cannot be polished out it must be cut out and patched.

(8) Small nonsharp dents in tip assembly (6, figure 5-32) that do not affect flight characteristics are permissible. If leading edge of swept tip is worn through from abrasion, tip assembly must be replaced.

(9) Polish out acceptable nicks and scratches spanwise only, using 180 grit sandpaper (C124) or finer. Polish to a surface finish of 63 rms or better removing only enough material to remove nick or scratch. Aluminum wool (C23) may be used on aluminum surfaces.

g. Inspect for edge voids as follows:

NOTE

A void is defined as an unbonded area. Many subdefinitions are often given such as lack of adhesive, gas pocket, misfit, etc. This manual makes no distinction among these but groups them in the one general term "void".

(1) Viewing the blade at the butt end, no voids are acceptable within **0.500** inch of the leading edge or trailing edge of any doubler Other voids not longer than **1.000** inch nor deeper than **0.350** inch are acceptable provided they are sealed.

NOTE

Balance weight and support (10, figure 5-32) are for balancing blade only after depot repairs have been made to blades.

(2) No voids are allowed under the balance weight support, grip pad, or wear pads. Bond separation of the wear pads and grip pads can be rebonded in accordance with paragraph 5-104.

(3) Edge voids under the spar closure not deeper than **0.150** inch nor longer than **0.750** inch are acceptable provided they are sealed.

(4) Edge voids **0.060** inch maximum depth of one bond line and not in excess of 10 percent of the total length of that bond line are acceptable. Single edge voids of **0.600** inch maximum depth and **2.000** inches maximum length are acceptable on doublers. Edge voids are not acceptable in the outboard five inches of each finger of the doubler.

(5) Voids between the skin and core in a **3.000** inch wide area running adjacent to the trailing edge extrusion, not wider than **0.500** inch nor longer than **1.000** inch, with a minimum width of **1.000** inch of good bond between them are acceptable. Total area of all voids shall not exceed **5.00** square inches.

(6) Edge voids between the edge of the skin and the trailing edge extrusion or spar that are less than **0.060** inch wide by any length or less than **0.120** inch width by **7.000** inches long are acceptable.

(7) Voids other than edge voids between the skin and the trailing edge extrusion which do not exceed **0.180** inch in width by **10.000** inches long are acceptable.

(8) A void between the skin and the trailing edge closure (at the butt end) not deeper than **0.120** inch and longer than **1.000** inch is acceptable.

(9) Voids between the skins and trailing edge extrusion not in excess of **0.180** inch in width by **10.000** inches long are acceptable.

(10) Voids between the skin and core **1.000** inch maximum width (chordwise) by **25.000** inches long are acceptable. Voids within **1.000** inch of each other are considered to be one void.

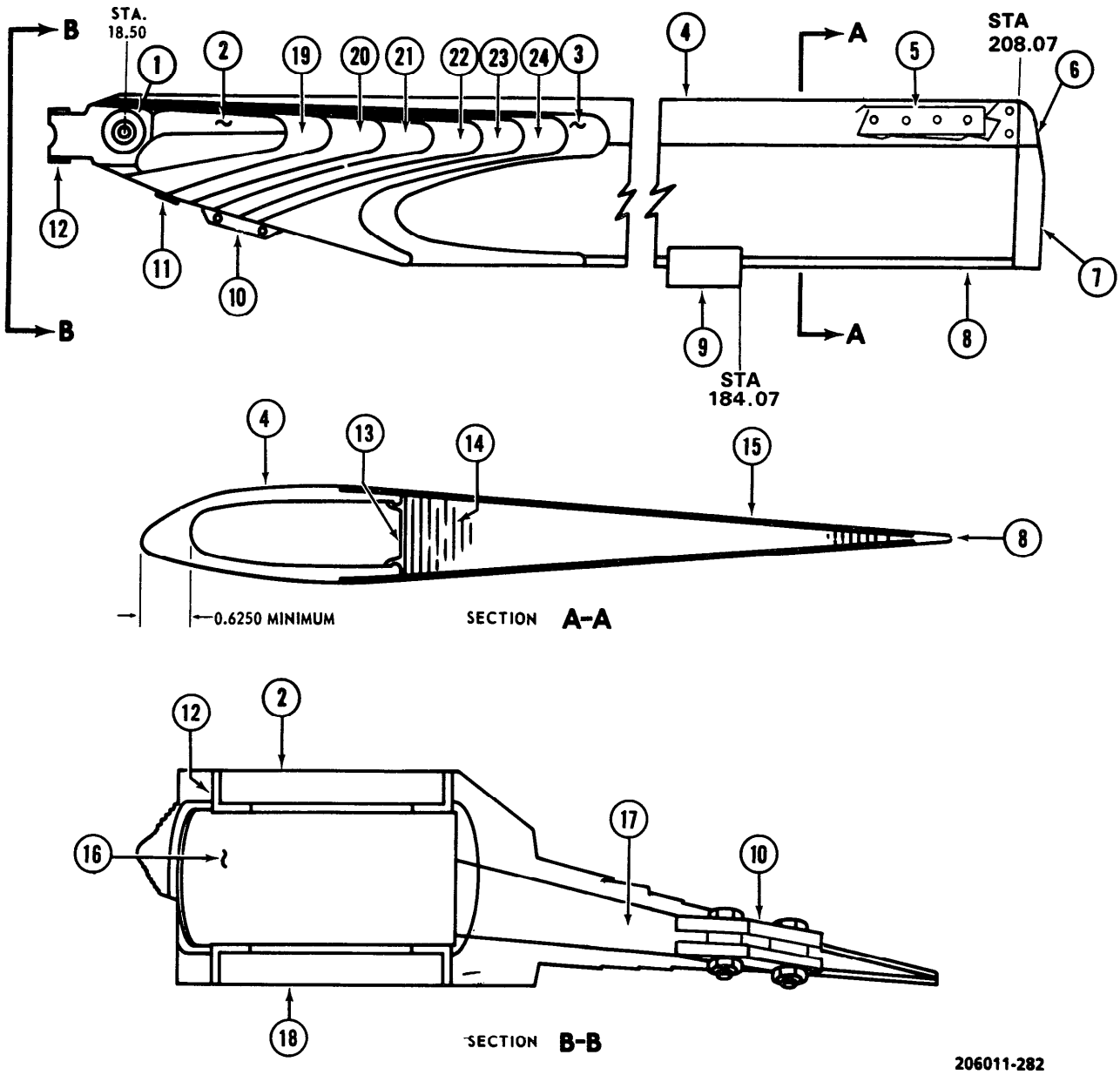

1. Grip Pad (2 reqd)
2. Grip Plate — Upper, Doubler No. 1
3. Doubler No. 8
4. Spar
5. Inertia Ballast
6. Tip Weight Support
7. Tip Fairing
8. Trailing Edge Strip
9. Trim Tab
10. Balance Weight and Support
11. Retention Bolt Hole Bushing
12. Wear Pad (4 Reqd)
13. Spar Spacer
14. Core
15. Skin
16. Spar Closure
17. Trailing Edge Closure
18. Grip Plate — Lower
19. Doubler No. 2
20. Doubler No. 3
21. Doubler No. 4
22. Doubler No. 5
23. Doubler No. 6
24. Doubler No. 7

Figure 5-32. Inspection — Main Rotor Blade

(11) Voids between the skin and spar not wider than **0.250** inch are acceptable. Voids not longer than **0.380** inch by **2.000** inches are acceptable provided spacing between void centers exceeds **6.000** inches. Edge voids a maximum of **0.080** inch are acceptable provided they are sealed.

(12) Edge voids between the edge of the skin and the trailing edge extrusion that are less than **0.080** inch width by any length or **0.190** inch width by **10.000** inches long are acceptable provided they are sealed.

h. Inspect for corrosion in area of screws securing inertia weight as follows: (Refer to figure 5-33.)

NOTE

Do not attempt to tighten or remove screws as they were bonded in place at original installation. If screws or weights are loose, replace blade.

(1) Inspect blades with paint and with filler covering screws, and adjacent areas for corrosion which will be noticeable as blisters or raised areas, and for cracks in paint adjacent to screw heads.

(2) If corrosion or cracks are evident, strip finish from affected areas as follows:

(a) Using masking tape (C143) mask off area to be stripped.

(b) Using sandpaper (C124 or C125), remove the finish by sanding in a spanwise direction only.

(c) Remove the masking and feather all the paint edges by sanding.

(d) If no corrosion or cracks are found, clean, and refinish stripped area.

i. Inspect blades for paint and filler worn or flaked from screw heads and adjacent areas as follows:

WARNING

Acetone is extremely flammable and toxic to eyes, skin, and respiratory tract. Wear protective gloves and goggles/face shield. Avoid repeated or prolonged contact. Use only in well-ventilated areas (or use approved respirator as determined by local safety/industrial hygiene personnel). Keep away from open flames, sparks, hot surfaces or other sources of ignition.

(1) Inspect for evidence of corrosion or cracks in the area adjacent to screw heads. If questionable areas are found use dye penetrant. If corrosion exists, remove blade from service. Clean corroded area by wiping with a clean cloth dampened with acetone (C2). Do not saturate area. Dry with clean cloth and coat with primer (C118). Return blade to depot for evaluation and repair.

(2) Screw heads may exhibit a degree of rust; this condition does not require rework.

(3) If no corrosion or cracks are found, clean and refinish bare area.

j. Inspect for leading edge erosion and corrosion as follows:

(1) Clean the blade.

(2) Inspect the main rotor blade leading edge for evidence of erosion. If present, it will be most pronounced at the blade tip and extend inboard a distance of three or four feet from the tip. The visible signs will be a wearing away of the blade paint finish revealing the blade spar. When erosion is found the area should be thoroughly inspected for signs of corrosion (exfoliation). This will be evidenced by pitting of the spar or flaking and/or scaling of the spar material.

(3) Where erosion along the leading edge has resulted in the start of corrosion, the blades must be removed from the helicopter and repaired.

k. Inspect grip pads for security, damage, and corrosion.

NOTE

Corrosion pitting is not permitted in grip pad area, surface corrosion can be cleaned up with scouring pad (C109). Area-under-grip-pads is a controlled dimension, and metal removal by sanding is not permitted.

l. Inspect paint condition; condition of paint on spar leading edge is unimportant as abrasion will remove paint in a few hours of flight.

m. Inspect the retention bolt hole bushing for corrosion. If corrosion is present, remove with scouring pad (C109). Inside diameter of bushing shall not exceed **1.525** inches after cleanup. Depot replacement of bushing is required if this diameter is exceeded.

(1) It is not necessary to remove all pits during cleanup, providing all corrosion and corrosion products are removed.

(2) Pitting **0.005** inch in depth is not permitted on any area of bushing after cleanup.

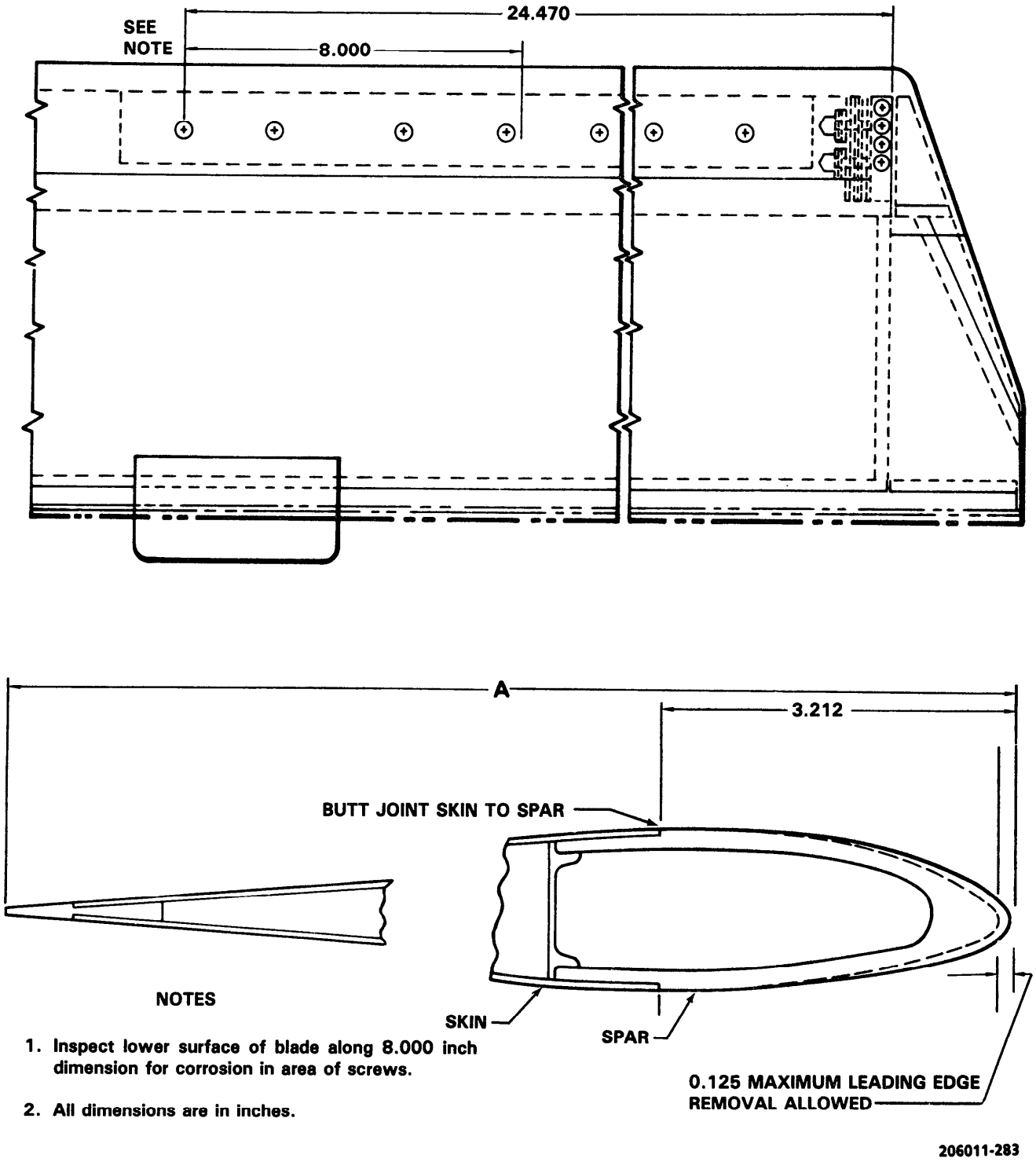

Figure 5-33. Repair Dimensions — Main Rotor Blade Corrosion

(3) For the critical area of blade bushing, refer to figure 5-34, detail A.

(4) Pitting that exceeds 20% of the critical area is not permitted. Any pit that exceeds **0.100** inch diameter in critical area is not permitted.

(5) After any repair to blade bushing, clean bolt hole with naphtha (C22) and apply corrosion preventive compound (C50) on all areas of blade bushing.

n. Inspect balance weight and support for corrosion. Pits not exceeding **0.040** inches are acceptable. Corrosion should be removed using sandpaper (C124). Care should be taken not to damage the trailing edge of blade. Reworked area should be coated with epoxy polyamide primer (C116) and a top coat of acrylic lacquer (C89).

o. Inspect for corrosion around and under wear pads, maximum pit corrosion depth in this area is **0.010** inches.

p. Inspect doublers for condition, corrosion, and separation/delamination.

CAUTION

Do not use sharp pointed tool or feeler gage to pry between doublers to check for separation/delamination.

(1) Inspect the doublers on the blade, both top and bottom for condition.

NOTE

The outermost plate, or that furthest from the blade, is called the grip plate or doubler No. 1. The doubler closest to the blade skin is doubler No. 8.

(2) Around each edge of the doublers should be a layer of filler material. Check to assure the filler material is in place and in good condition. Loss of filler material, or a broken surface of filler material will eventually cause corrosion, and result in doubler separation.

(3) If filler material is not in place perform the following:

(a) Check the doubler and/or blade for condition.

(b) If no corrosion is evident, clean up the area.

(c) Treat unprotected metal areas, and then coat with epoxy polyamide primer (C116).

(d) Retreat the doubler area, refer to paragraph 5-105.

(e) Refinish the blade surface.

(4) Check the filler material around each of the eight doublers, both top and bottom of the blade. Check for signs of blisters or paint cracks which would be indicative of subsurface corrosion.

(5) Inspect each doubler for signs of separation/delamination; no separation is permitted. Check each of the eight doublers, at both leading edge and trailing edge, especially doublers No. 7 (24, figure 5-32) and No. 8, (3) at both the top and bottom of the blade.

(6) If doubler separation is suspected, it may be confirmed by ultrasonic inspection by a qualified inspector or tapping by an experienced inspector.

(7) Treat the doubler area; refer to paragraph 5-105. Refinish the blade surface as required.

q. Inspect blade drain hole located on lower outboard side, see Figure 5-33.1, to assure drain hole is free of obstructions.

CAUTION

Use a non-metallic probe (tooth pick or plastic rod) to probe the drain hole.

5-100. REMOVAL — MAIN ROTOR BLADES.

CAUTION

Do not change the position of latch nut (9, figure 5-11) on the leading edge of the blade. The position of nuts will aid in realignment of the blades.

a. Remove nut from blade bolt (1, figure 5-11). Loosen blade latch retaining nut (9) on trailing edge of blade and turn latch (11) to horizontal position.

b. Use sufficient personnel to steady both blades and to hold blade being removed. Hold blade at pre-coned angle and in alignment while removing blade bolt (1) and while removing blade (6) from grip (3).

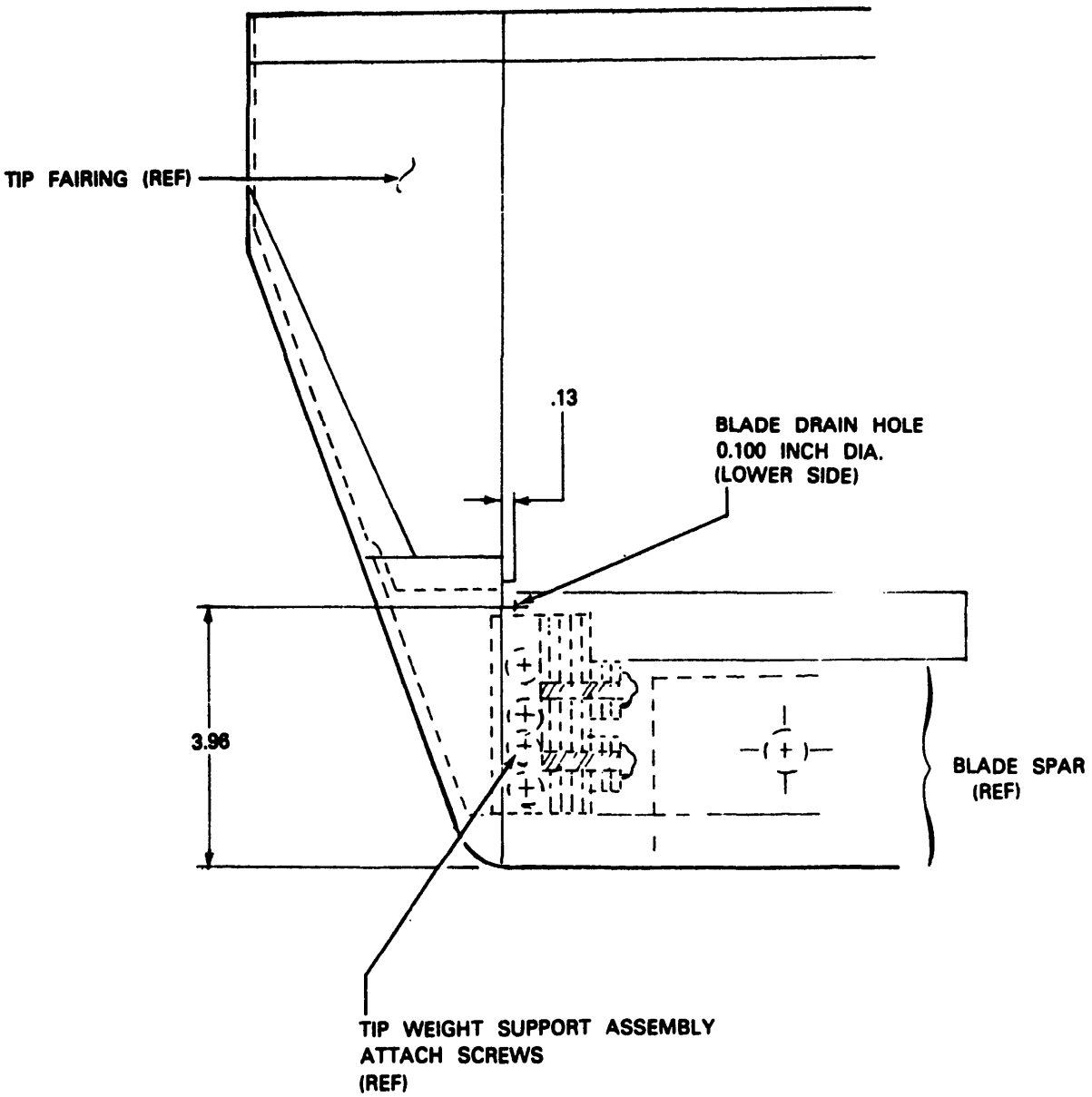

Figure 5-33.1. Main Rotor Blade Drain Hole

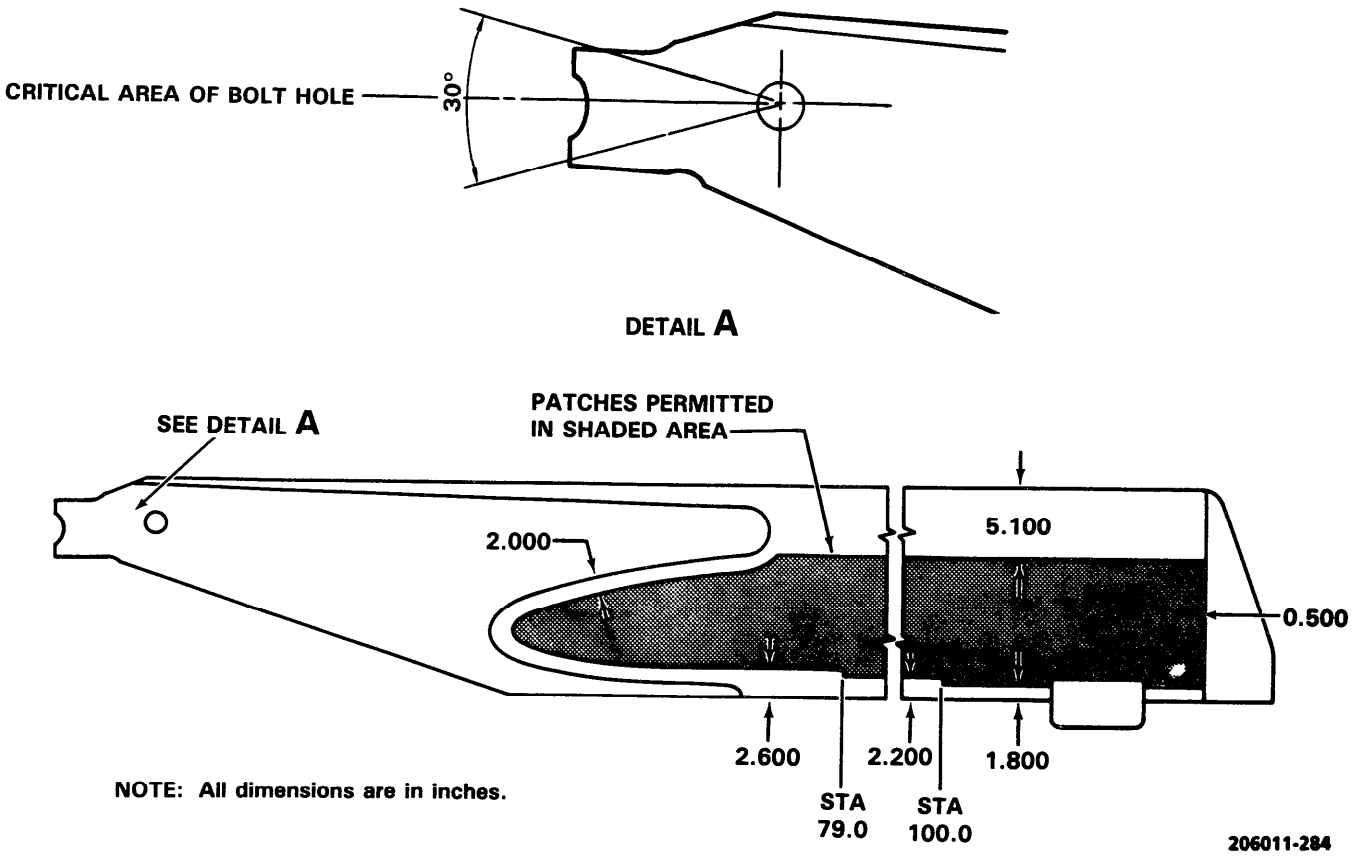

Figure 5-34. Repair Areas — Main Rotor Blades

NOTE

Blade retention bolt (1) is easily removed when blade is aligned with grip and pressure is removed from bolt.

NOTE

If original bolt is unserviceable, a new bolt (1, figure 5-11), may be installed. If a new bolt cannot be obtained, refer to paragraph 5-88 and 5-89 for alternate procedure.

c. Repeat procedure to remove opposite blade.

d. Prepare and package reparable blades that are to be shipped in wood or metal containers as follows:

NOTE

Do not return main rotor blades for overhaul or repair that are obviously scrap.

(1) Tape all holes, bullet damage, tree damage, foreign object damage, etc., to protect the interior of the blade.

(2) Clean the blade to ensure removal of soil, oil, or grease with dishwashing compound (C61).

5-101. CLEANING — MAIN ROTOR BLADES PRIOR TO REFINISHING.

a. Protect all openings to prevent entry of refinishing materials.

b. Degrease with naphtha (C22).

WARNING

Acetone is extremely flammable and toxic to eyes, skin, and respiratory tract. Wear protective gloves and goggles/face shield. Avoid repeated or prolonged contact. Use only in well-ventilated areas (or use approved respirator as determined by local safety/industrial hygiene personnel). Keep away from open flames, sparks, hot surfaces or other sources of ignition.

c. Using cloth pads soaked with acetone (C2), strip lacquer finish from blade. Do not remove primer except in areas where the primer is cracked or deteriorated or in areas where the metal appears to be corroded or otherwise damaged. Remove primer in these areas down to bare metal using cloth pad soaked with acetone (C2) The process consist of wetting the surface with theacetone (C2) soaked pad and then scrubbing with a piece of cloth until surface has dried or paint has been removed. If the paint is not removed repeat application of acetone (C2) followed by cloth rub until paint is removed.

d. After corrosion pits have been removed and reparable nicks and scratches have been polished out, remove surface oxidation from the entire blade by scrubbing thoroughly with cloth and a solution of neutral soap.

e. Rinse thoroughly with clean running water until there is a continuous unbroken film of water on the surface.

f. Apply phosphoric acid solution (C21) using a clean cloth or brush. Rub briskly for approximately **40 to 60** seconds.

g. Rinse the blade thoroughly with clean running water and wipe dry with clean cloths.

NOTE

From completion of this step through final paint, surfaces of blades are not to be handled with bare hands.

h. On all bare aluminum, apply brush or spray (using brush solution) application of chemical conversion coating (C38). If not available, use application of 10% solution of chromic acid (C39). Thoroughly dry the cleaned surfaces.

5-102. REPAIR — MAIN ROTOR BLADES — CORROSION.

a. Using a micrometer caliper or equivalent, measure the chordline dimension (figure 5-33, dimension A) of the blade immediately adjacent to the area(s) of corrosion that will be cleaned up. This measurement minus a maximum of **0.125** inch cleanup at the leading edge will determine that remaining leading edge thickness is within limits.

EXAMPLE:

Measured Dimension A	**13.009** Inch
Maximum Cleanup Allowed	**0.125** Inch
Minimum Dimension A Measurement to the Deepest Part of Cleaned Up Area.	**12.884** Inch

b. Using sandpaper (C123) or equivalent, sand the corroded area(s) as follows:

(1) Hand-sand only.

(2) Accomplish all sanding in spanwise direction.

(3) Sand to the depth required to remove the effects of corrosion. (Create a smooth surface.)

(4) Blend and fair sanded area into adjacent areas so as to maintain the shape of the air foil.

NOTE

Do not sand the skin to spar butt joint.

c. Remove the sanding residue with naphtha (C22).

d. Support the blade in a horizontal position, leading edge down. Swab the sanded area(s) with alcoholic phosphoric acid solution (C21). Allow the swabbed area(s) to remain dampened with the acid for a minimum of **10** minutes; then wipe the excess acid from the blade with dry cloths. Allow the blade to air dry for **20** minutes.

NOTE

Do not allow the alcoholic phosphoric acid solution to touch painted surfaces. It is not mandatory but may be advisable to wear rubber gloves when using alcoholic phosphoric acid (C21) solution.

e. Apply a coat of wax to the blade. Use non-siliconized wax so as not to interfere with blade future repairs and/or subsequent refinishing.

f. Record the location and depth of cleanup for future reference.

5-103. REPAIR — MAIN ROTOR BLADES (PATCHING) (AVIM). Refer to figure 5-34.

NOTE

All sanding of blades must be in spanwise direction.

a. Defects in skins (holes, dents, nicks, etc.) that will fit within a **2.000** inch maximum diameter circle are reparable by patching if they are not nearer to the trailing edge strip, spar, or doublers than the minimum dimensions for a particular area as indicated in figure 5-34.

WARNING

Acetone is extremely flammable and toxic to eyes, skin, and respiratory tract. Wear protective gloves and goggles/face shield. Avoid repeated or prolonged contact. Use only in well-ventilated areas (or use approved respirator as determined by local safety/industrial hygiene personnel). Keep away from open flames, sparks, hot surfaces or other sources of ignition.

b. Remove paint from repair area with acetone (C2). Dry with a clean cloth.

c. Prepare a patch one inch larger than the hole to be covered (not to exceed three inches in diameter). Patch may be fabricated from bare aluminum. Deburr and blend out edges. Sand bond area of patch and blade with sandpaper (C126).

d. Remove skin just inside circled area, disturbing honeycomb core as little as possible.

e. Deburr edges of hole, making sure skin is free of scratches and nicks.

WARNING

Acetone is extremely flammable and toxic to eyes, skin, and respiratory tract. Wear protective gloves and goggles/face shield. Avoid repeated or prolonged contact. Use only in well-ventilated areas (or use approved respirator as determined by local safety/industrial hygiene personnel). Keep away from open flames, sparks, hot surfaces or other sources of ignition.

f. Clean bond area on patch and blade with acetone (C2). Dry with clean cloth.

NOTE

Area must be clean, dry, and free of grease, oil, or wax.

g. Apply adhesive (C19) to patch area around hole. Apply patch to blade under slight pressure to make sure any voids in bond are worked out. Blend out excessive adhesive.

h. Patch may be held in place while curing with flat pressure plate and rubber bands. Allow to cure at **60°F (16°C)** or above until firm (adhesive resists fingernail penetration). Overnight curing is usually sufficient. To accelerate curing time, apply heat to the area with a 200-watt lamp placed **12** inches from patch. Heat should be applied until adhesive is firm (will resist fingernail penetration).

i. Refinish patch and adjacent area. Refer to paragraph 5-105.

j. To prevent entry of moisture, seal all acceptable edge voids with fairing compound (C69).

5-104. REPAIR — MAIN ROTOR BLADES WEAR AND GRIP PADS.

NOTE

Replacement of old wear pad with a new wear pad must be accomplished by depot level maintenance.

a. Rebond loose wear pads as follows:

(1) Remove loose wear pad (12, figure 5-32) by gently tapping pad, using care not to damage the grip plates. If tapping fails to loosen pad, apply head and repeat tapping. Do not heat area above **200°F (93°C)**.

(2) After pad has been removed, remove as much of the old adhesive as possible from blade by sanding with sandpaper (C124).

WARNING

Acetone is extremely flammable and toxic to eyes, skin, and respiratory tract. Wear protective gloves and goggles/face shield. Avoid repeated or prolonged contact. Use only in well-ventilated areas (or use approved respirator as determined by local safety/industrial hygiene personnel). Keep away from open flames, sparks, hot surfaces or other sources of ignition.

(3) Wipe bonding surface on blade and wear pad with a clean cloth dampened with acetone (C2). Wipe dry using clean cloth.

(4) Apply adhesive (C19) to mating surfaces of blade and wear pad.

(5) Rebond wear pad to blade, using **5 to 30** psi pressure, apply with clamps at a temperature of **70°to 90°F (21° to 35° C) for 24** hours or **90** minutes at **140° to 160° F (60° to 71° C)**.

WARNING

Acetone is extremely flammable and toxic to eyes, skin, and respiratory tract. Wear protective gloves and goggles/face shield. Avoid repeated or prolonged contact. Use only in well-ventilated areas (or use approved respirator as determined by local safety/industrial hygiene personnel). Keep away from open flames, sparks, hot surfaces or other sources of ignition.

(6) Remove clamps and clean away excessive adhesive squeeze-out. Wipe area clean with a clean cloth dampened with acetone (C2).

b. Rebond loose grip pads as follows:

NOTE

Replacement of old grip pad with new grip pad must be accomplished by depot level maintenance.

(1) Remove old pad (1, figure 5-32) by prying loose, using an aluminum or hardwood wedge, being very careful not to damage blade.

(2) Remove all old adhesive from blade by sanding with sandpaper (C124).

WARNING

Acetone is extremely flammable and toxic to eyes, skin, and respiratory tract. Wear protective gloves and goggles/face shield. Avoid repeated or prolonged contact. Use only in well-ventilated areas (or use approved respirator as determined by local safety/industrial hygiene personnel). Keep away from open flames, sparks, hot surfaces or other sources of ignition.

(3) Wipe bonding surface of blade with clean cheesecloth (C37), dampened with acetone (C2). Wipe dry with a clean cloth.

(4) Coat adhesive surface of grip pad and mating surface of blade with adhesive (C19).

(5) Place pad on blade around retention bolt hole. Position a bar over grip pad. Place clamps over bar and tighten. Allow adhesive to cure for **24** hours at **70° to 95°F (21° to 35° C)** or **60 to 70** minutes at **140° to 160° F (60° to 71° C)**.

(6) Remove clamps and bar. Clean up excessive adhesive squeeze-out.

WARNING

Acetone is extremely flammable and toxic to eyes, skin, and respiratory tract. Wear protective gloves and goggles/face shield. Avoid repeated or prolonged contact. Use only in well-ventilated areas (or use approved respirator as determined by local safety/industrial hygiene personnel). Keep away from open flames, sparks, hot surfaces or other sources of ignition.

(7) Wipe area dean with cheesecloth (C37) dampened with acetone (C2).

5-105. REFINISHING — MAIN ROTOR BLADE (AVIM).

NOTE

The original blade .nish included an abrasion and corrosion resistant coating (C6).

a. Inspect the edges of the doublers and joint areas of the blade to determine if the coating has been damaged.

b. If the coating is undamaged, refer to TM 55-1500-345-23.

(1) Mixing ratio of coating (C6) is by weight: 100 parts of base to 140 parts of hardener.

(2) Thoroughly mix to a uniform gray color.

(3) To thin, add **13% to 15%** (by weight) of primer (C116) to mixed coating (C6).

(4) Thin to a sprayable consistency by adding thinner (C148) in an amount not to exceed **50%** by volume of mixed coating (C6). Add the **thinner** in small amounts, with constant stirring. The pot life of the thinned coating is approximately three hours. (Refer to TM 55-1500-345-23 for application procedures.)

(5) Thickness of finish after drying will be as follows:

(a) Surface areas that receive three coats of coating, **6.500 to 12.000** mils.

(b) Surface areas that receive one coat of coating, **3.500 to 6.000** mils.

5-106. INSTALLATION — MAIN ROTOR BLADES.

a. Loosen blade latch retaining nut (9, figure 5-11) on trailing edge of hub and turn latch to horizontal position.

CAUTION

When installing blade in grip, use sufficient personnel to hold and align blade to prevent damage to blade.

NOTE

The manufacturers data plate is bonded to the top of the main rotor blade. Install the blade with the top up. This places the leading edge on the same side of grip (3) as the pitch horn (7).

WARNING

Aliphatic Naphtha is flammable and toxic to eyes, skin, and respiratory tract. Wear protective gloves and goggles/face shield. Avoid repeated or prolonged contact. Use only in well-ventilated areas (or use approved respirator as determined by local safety/industrial hygiene personnel). Keep away from open flames, sparks or other sources of ignition.

b. When installing blade in grip, use sufficient personnel to hold end align blade, Clean the blade retention bolt holes, and recesses in the inboard faces of the blade grip tang with naphtha (C22). Visually inspect the inner and outer surfaces of the grip tangs for cracks at the outboard side of the blade bolt holes at the interface of the inside hole diameter and adjacent radius. Apply corrosion preventive compound (C51) generously to fill recesses (I.D. edges of grip pads to bolt hole edges). Install blade into grip and align bolt holes. Apply corrosion preventive compound (C51) generously to the bolt holes in the grip tangs and blade. Place chamfered washer (2, figure 5-11) on blade retaining bolt (1) and apply a generous amount of corrosion compound to the bolt shank (not the threads). Insert bolt through grip (3) and blade. Install washer (4) and nut(S). Wipe off any excess corrosion preventive compound using naphtha (C22).

NOTE

Corrosion preventive compound may be applied over solid film lubricants, paints, and electroplated coatings when necessary. Refer to paragraph 5-13.

c. Install opposite blade in same manner.

d. Align and balance blades. Refer to paragraph 5-6 and 5-9.

5-107. PAINTING REQUIREMENT — MAIN ROTOR BLADE. Refer to TM 55-1500-345-23.

SECTION IV MAIN ROTOR CONTROLS

5-108. MAIN ROTOR CONTROLS.

5-109. DESCRIPTION — MAIN ROTOR CONTROLS. The main rotor controls provide for support and control of the movement of the main rotor blades and consist of four major components as follows:

a. Swashplate and support assembly.

b. Pitch link assembly.

c. Idler link assembly and collar set.

d. Collective lever and link assembly.

NOTE

For maintenance of the main rotor controls, refer to applicable instructions contained in this section for each major component.

5-110. SWASHPLATE AND SUPPORT ASSEMBLY.

5-111. DESCRIPTION — SWASHPLATE AND SUPPORT ASSEMBLY (FIGURE 5-35). The swashplate and support assembly encircles the mast directly above the transmission. The swashplate is mounted on a universal support (pivot sleeve) which permits it to be tilted in any direction. Movement of the cyclic control stick results in a corresponding tilt of the swashplate and the main rotor. Movement of the collective pitch lever actuates the sleeve assembly which raises or lowers the swashplate and transmits collective control to the main rotor. The cyclic controls are properly coordinated with collective control by action of the mixing lever at the base of the control column.

CAUTION

Do not allow solvents or lubricants to contact teflon bearings of swashplate assembly.

Premaintenance Requirements for Swashplate and Support

Condition	Requirements
Model	OH-58A and OH-58C
Part No. or Serial No.	All
Special Tools	(T27)
Test Equipment	Spring Scale Eddy Current Inspection Unit Magnetic Particle Method
Support Equipment	None
Minimum Personnel Required	Two Men
Consumable Materials	(C2) (C9) (C51) (C55) (C62) (C96) (C97) (C118) (C129)
Special Environmental Conditions	None
References	TM 1-1520-254-23

5-112. INSPECTION — SWASHPLATE AND SUPPORT ASSEMBLY.

a. Inspect swashplate for evidence of grease leakage at seals.

NOTE

Swashplate and support assemblies equipped with cap, PIN 206-010-444-1, may vent grease past the lower seal on first flight after lubrication. This excess grease must be removed.

b. Check swashplate and support assembly for freedom of operation. Check collective vertical movement and cyclic tilting movement of the inner ring on collective sleeve spherical ball as follows:

(1) Cut lockwire and free lower end of boot (16, figure 5-36).

(2) Tilt swashplate inner ring forward. Inspect side walls of pivot sleeve (2, figure 5-35) bearing slot for signs of wear through teflon bearing material. Inspect top outboard edges of bearing (5) for evidence of physical damage and wear through teflon bearing material. Tilt swashplate inner ring aft and repeat inspection on opposite side of pivot sleeve.

(3) If sleeve slots and/or bearings do not pass inspection, replace swashplate and support assembly.

c. Inspect swashplate and support assembly for minor nicks, scratches, and gouges. Ensure that drain holes on base of support assembly (12) are open and free of foreign matter.

d. Inspect swashplate support for cracks. If a crack on the swashplate and support assembly is suspected, refer to TM 1-1520-254-23, Technical Manual Aviation Unit Maintenance (AVUM) and Aviation Intermediate Maintenance (AVIM) Manual Nondestructive Inspection Procedures for OH-58 Helicopter Series.

WARNING

To prevent injury to personnel, secure main rotor blades with tie-downs.

(1) Raise collective control to gain access to the base of the swashplate support assembly (12, figure 5-35).

WARNING

Degreasing Solvent is combustible and toxic to eyes, skin, and respiratory tract. Wear protective gloves and goggles/face shield. Avoid repeated or prolonged contact. Use only in well-ventilated areas (or use approved respirator as determined by local safety/industrial hygiene personnel). Keep away from open flames or other sources of ignition.

CAUTION

When using degreasing solvent for cleaning, use care to prevent contamination of adjacent parts.

(2) Thoroughly clean swashplate support base (12, figure 5-35). Use degreasing solvent (C62).

(3) Visually inspect full circumference of fillet radius where cylindrical (slider) portion joins support base (area immediately below area C, figure 5-48). Pay particular attention to aft side of swash-plate support assembly. Use a 10 power magnifying glass.

(4) If a crack is suspected, confirm by performing a fluorescent penetrant inspection of suspect area. No cracks allowed.

(5) If no crack is found, lower collective control, inspection is complete.

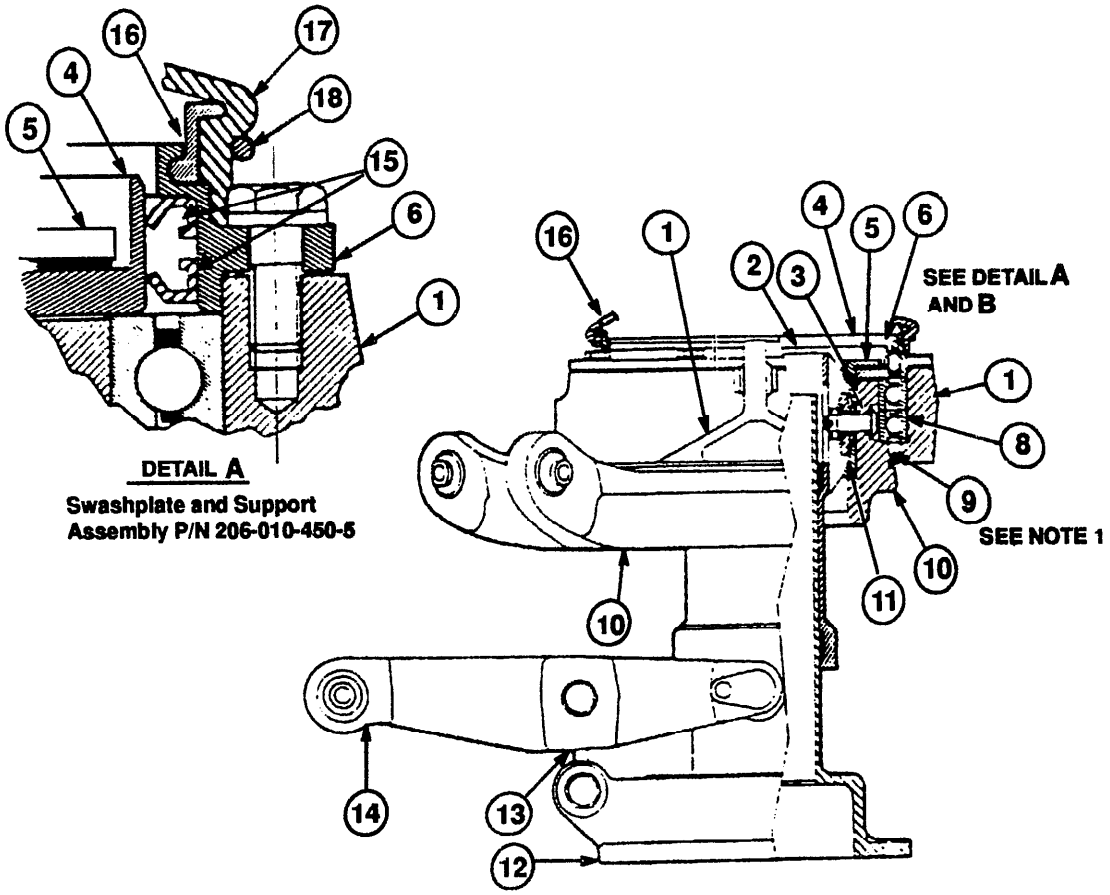

1. Outer Ring Assembly
2. Pivot Sleeve
3. Packing
4. Cap
5. Bearing
6. Cap
7. Laminated Shim
8. Bearing
9. Seal
10. Inner Ring
11. Bearing
12. Swashplate Support Assembly
13. Collective Lever Link
14. Lever Assembly
15. Seal
16. Retainer Ring
17. Boot
18. Lockwire
19. Seal (Upper)
20. Seal (Lower)
21. Grease Fitting
22. Grease Fitting

Figure 5-35. Swashplate and Support Assembly (Sheet 1 of 2)

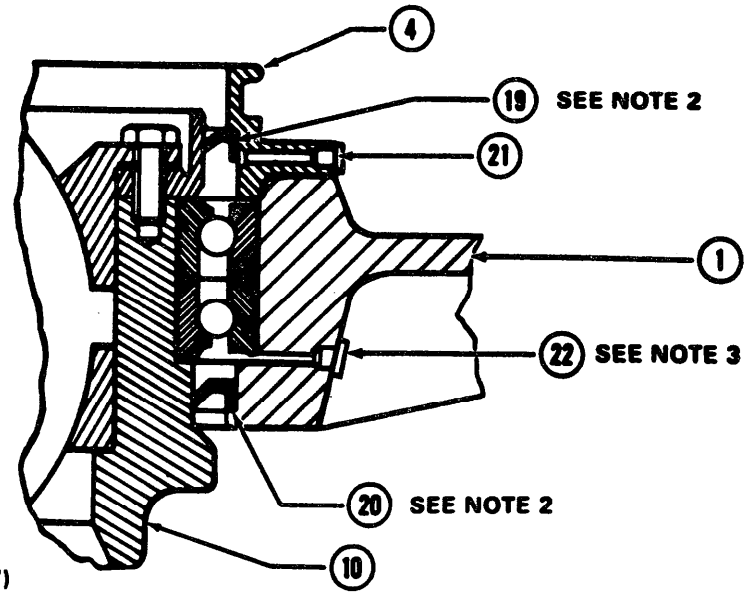

DETAIL B (ROTATED 180°)

Swashplate and Support Assembly P/N 206-010-450-7 and -9

NOTES:
1. Install seal (9) with seal lip pointing up.
2. Install seals (19) and (20) with seal lip pointing down.
3. Drive screw (MS21318-27) may be installed to replace unused grease fitting (22) in outer ring.

206010-171-2

Figure 5-35. Swashplate and Support Assembly (Sheet 2 of 2)

d. Check for looseness at the following points:

(1) Pivot sleeve (2) to lever assembly (14), **0.016** inch maximum vertical movement at pivot point; **0.042** inch maximum side play movement at pivot point.

(2) Collective lever link (13) at attachment points to lever assembly (14) and swashplate support assembly (12).

e. Check self-aligning bearing in swashplate inner and outer ring arms (2 and 3, figure 5-37) for radial and/or axial wear. If radial and/or axial wear exceeds **0.020** inch, bearing must be replaced.

f. If inspection is satisfactory, reinstall boot (16, figure 5-36) and double wrap lockwire (C96). If maintenance is required, reinstall boot and double wrap lockwire as last maintenance step.

5-113. ADJUSTMENT — SWASHPLATE AND SUPPORT ASSEMBLY.

a. Adjust friction of swashplate inner ring to pivot sleeve spherical ball and inspect associated controls as follows:

CAUTION

Do not allow main rotor blade to rotate on pitch change axis. If blade rotates on the pitch change axis beyond 90 degrees, the main rotor retention strap must be replaced.

(1) Remove pitch links (8, figure 5-1).

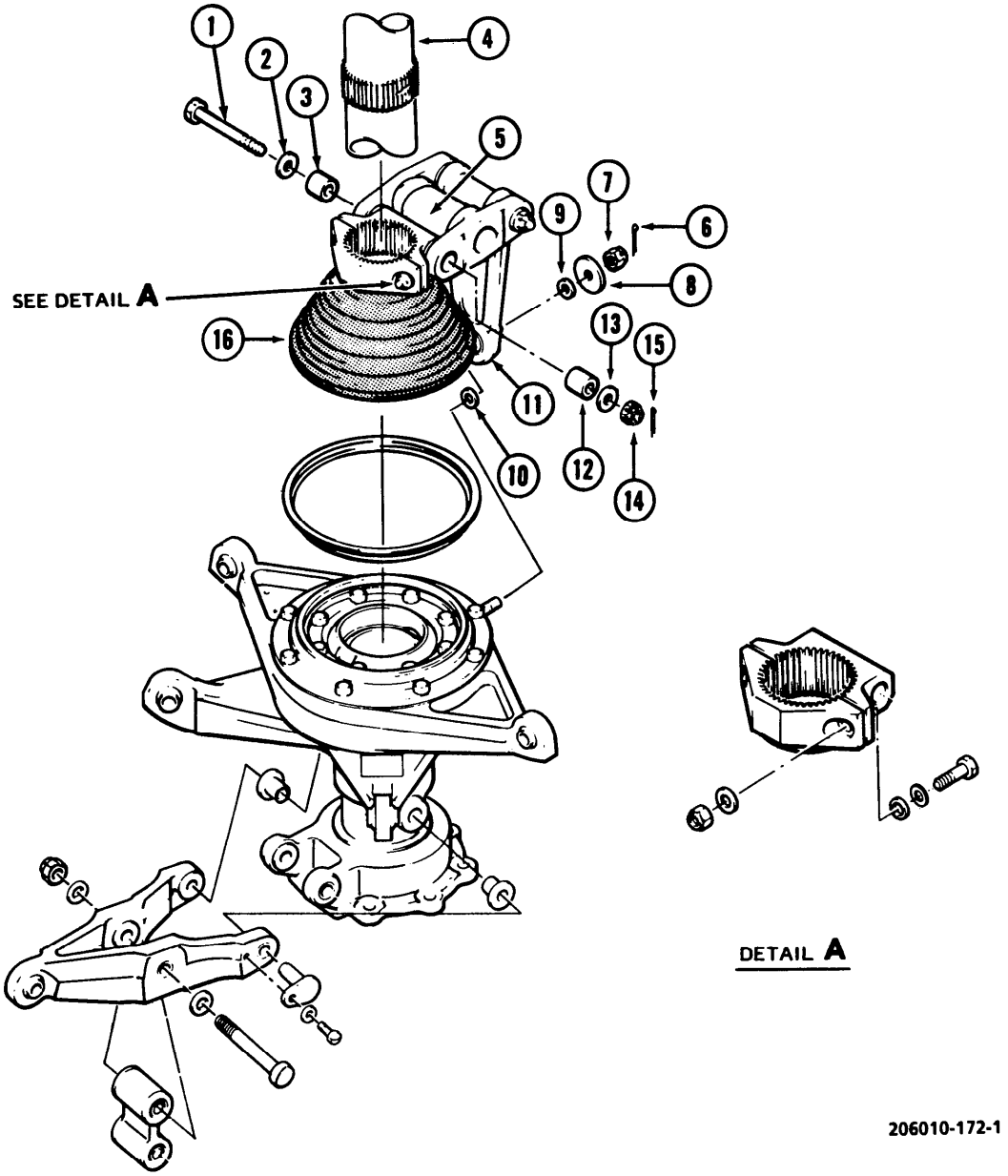

1. Bolt	7. Nut	13. Washer
2. Washer	8. Washer	14. Nut
3. Spacer	9. Washer	15. Cotter Pin
4. Mast	10. Washer	16. Boot
5. Lever	11. Idler Link	
6. Cotter Pin	12. Spacer	

Figure 5-36. Collective Lever, Idler Link, and Collar Set Installation (Sheet 1 of 2)

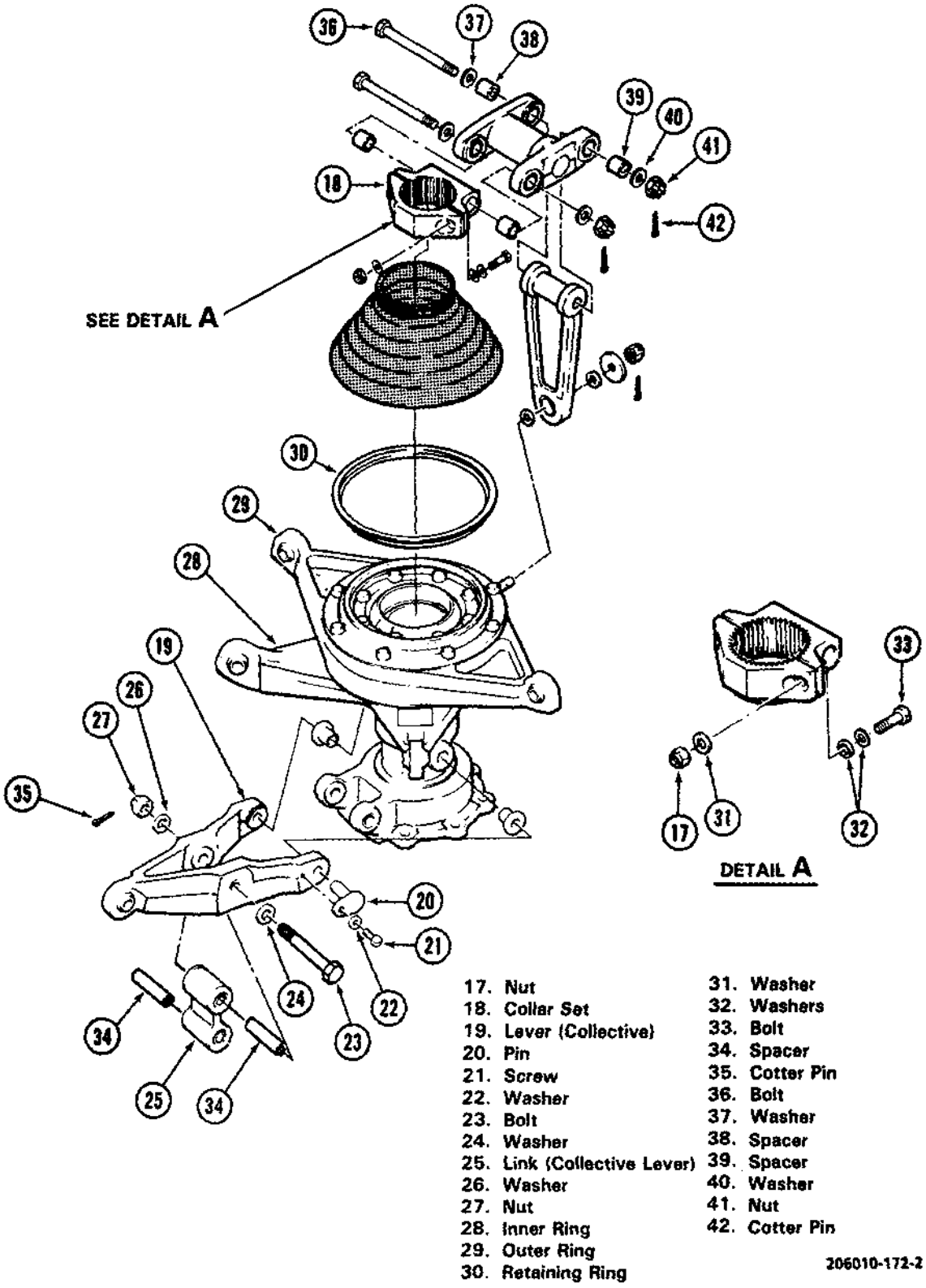

Figure 5-36. Collective Lever, Idler Link, and Collar Set Installation (Sheet 2 of 2)

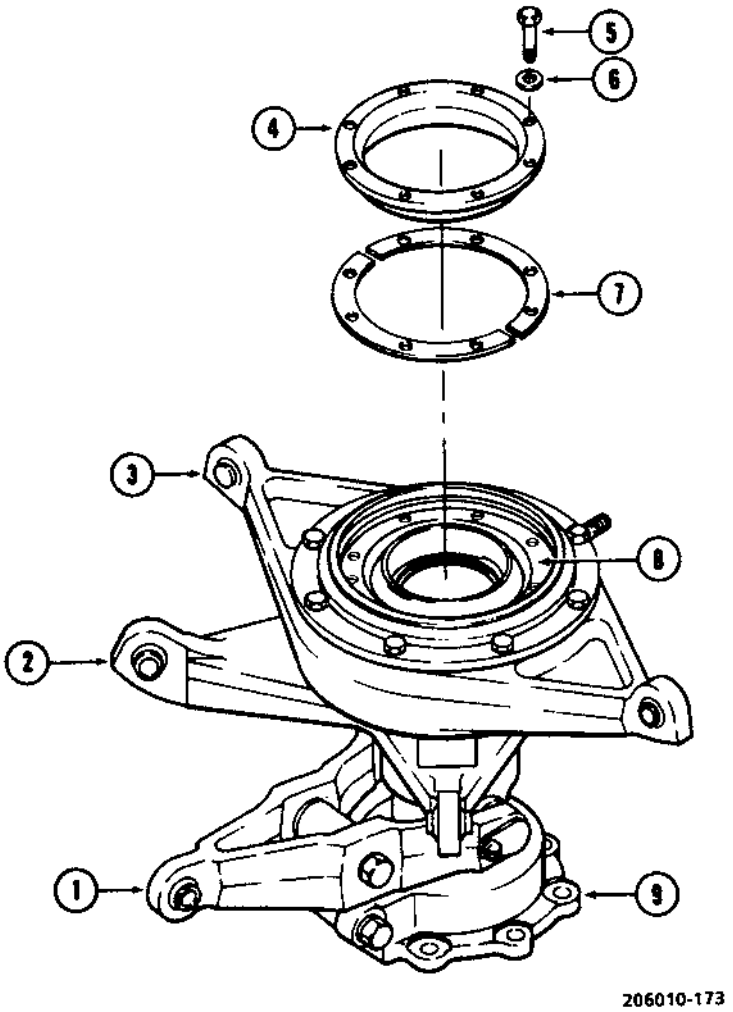

1. Collective Lever
2. Inner Ring
3. Outer Ring
4. Bearing
5. Bolt
6. Washer
7. Shim
8. Inner Cap
9. Support

Figure 5-37. Swashplate Friction Adjustment

(2) Disconnect control tubes from swashplate inner ring (2, figure 5-37).

NOTE

The 6 pounds value for breakaway torque differs for AVUM and AVIM. This allows AVUM longer trouble free operation of this item.

(3) Disconnect idler link (11, figure 5-36) from outer ring (29).

(4) Check friction adjustment of bearings (5 and 11, figure 5-35). Place swashplate in level position on pivot sleeve and attach a spring scale to self-aligning bearings in swashplate outer ring arm. Pull vertically with scale to cause swashplate to tilt on pivot sleeve. Note pounds of breakaway torque required to tilt swashplate at various points throughout travel. If force is not within the range of **24 to 32** pounds, adjust friction. The difference of breakaway torque at the various points checked must not exceed **6** pounds within the range.

(5) Repeat check with spring scale three or more times to ensure that accurate values are obtained. The values for forward and aft lateral friction must both fall within the range of **24 to 32** pounds. If the forward and aft friction and lateral friction vary appreciably, suspect dragging bearings (5).

b. Check for binding and dragging of pivot sleeve bearings. Disconnect control tube at forward end of lever assembly (14). Grasp lever assembly (14) and move vertically through full range of travel. Collective movement of the swashplate pivot sleeve (2) will be smooth with no dragging as it moves on the swashplate support (12).

c. Check for binding and dragging of bearings (8). Rotate swashplate outer ring on swashplate assembly. If resistance to turning is not smooth and moderate throughout **360** degree rotation in both directions, replace swashplate and support assembly.

d. Adjust swashplate friction as follows:

(1) Cut lockwire and remove eight bolts (5, figure 5-37). Index position of bearing (4).

CAUTION

Bearing (4) can be installed in eight different positions. Bearing must be index marked before removal and installed in exactly the same position from which removed to ensure smoothness of operation of the cyclic flight controls.

NOTE

Shim (7) is a segment shim. Shims with the angle cut (45 degrees) are 0.003 inch thick. The shims with the square cut (90 degrees) are 0.002 inch thick.

(2) Remove bearing (4) and shim (7).

WARNING

Acetone is extremely flammable and toxic to eyes, skin, and respiratory tract. Wear protective gloves and goggles/face shield. Avoid repeated or prolonged contact. Use only in well-ventilated areas (or use approved respirator as determined by local safety/industrial hygiene personnel). Keep away from open flames, sparks, hot surfaces or other sources of ignition.

(3) Prior to adjusting shim thickness to adjust swashplate friction, clean teflon bearing surfaces of uniball bearing (4), inner cap (8), and shims (7). Use clean cloth lightly dampened with acetone (C2).

(4) Remove lamination from shim (7) to increase friction. Use a thicker shim to decrease friction.

CAUTION

Do not chase threads in holes for bolts (5). These are helicoil threads. If threads are not satisfactory, replace swashplate.

NOTE

Ensure that both shim halves (7) are of identical thickness.

(5) Reassemble shims and bearings in swashplate. Temporarily install four threaded studs into inner ring (2) as a work aid for shim alignment; studs should be about **4** inches long. Install shims using studs for alignment. Ensure shims (7) are not deformed during installation. Install bearing (4) over studs. Install four bolts (5) and four washers (6) with recessed side of washer next to bolt head and torque to **40 INCH-POUNDS** in sequence opposite each other. Remove four work aid studs and install remaining four bolts (5) and washers (6) with recessed side of washer next to bolt head and torque

to **40 INCH-POUNDS** in sequence opposite each other. Apply a final torque of **50 TO 70 INCH-POUNDS** to all eight bolts in sequence opposite each other.

(6) Check friction. If required, repeat shim adjustment procedure. Refer to paragraph 5-113.

(7) Lockwire (C96) heads of bolts (5) in pairs.

e. Install pitch links (8, figure 5-1).

f. Connect control tubes to swashplate inner ring (2, figure 5-37).

g. Connect idler link (11, figure 5-36) to outer ring (29).

5-114. REMOVAL — SWASHPLATE AND SUPPORT ASSEMBLY.

a. Remove main rotor hub and blade assembly. Refer to paragraph 5-8.

b. Disconnect two cyclic control tubes from swashplate inner ring (1, figure 5-38).

c. Disconnect collective control tube from collective lever (2).

d. Remove cotter pin (3), nut (4), and washers (5 and 6). Disconnect idler link (19) from stud on swashplate outer ring (8) and remove washer (7).

e. Cut lockwire to free upper end of boot (9).

f. Loosen two nuts (10).

g. Remove cotter pin (11), nut (12), washer (13), and spacer (14). Remove bolt (15), washer (16), and spacer (17).

h. Remove lever (18) and idler link (19).

i. Lift collar set (24) off over mast (20).

j. Remove lockwire from bottom of boot (9) and lift boot off over top of mast. Remove retainer ring (25).

k. Remove eight nuts (21) and washers (22) from studs in top of transmission case and carefully lift swashplate and support assembly (23) off over top of mast.

5-115. DISASSEMBLY — SWASHPLATE AND SUPPORT ASSEMBLY (AVIM).

a. Remove collective lever (29, figure 5-39) as follows:

(1) Cut and remove lockwire from two screws (26). Remove screws (26), washers (25), and pins (27) from collective lever (29).

(2) Remove cotter pins (12 and 31), nuts (11 and 30), washers (10 and 24), and bolts (13 and 23). Remove collective lever (29) and link (21) from support (8).

(3) Lockwire spacers (19) to link (21) to prevent their separation.

(4) Lift inner and outer rings (7 and 42) with pivot sleeve (2) from support (8).

b. Remove outer ring (42) from inner ring (7) as follows:

(1) Cut and remove lockwire from eight bolts (33) and eight bolts (35).

(2) Remove bolts (35), washers (36), and outer cap (34) with seals (38) from outer ring (42). Remove seals (38) from outer cap (34) and discard seals (38).

NOTE

The top half of bearing set (4) can be installed in eight different positions. Bearings (4) must be index marked before removal and if reused, installed in the same position from which removed to ensure smoothness of operation. Index mark parts with a felt tip pen or paint in such a manner that marks will not be removed during cleaning or repair procedures.

(3) Remove bolts (33), washers (32), top half bearing set (4), shims (39), and inner cap (40) from outer ring (42). Measure and record shim (39) thickness for reinstallation.

(4) Carefully work outer ring (42) from inner ring (7). Remove duplex bearings (41) and lower seal (38) and discard seal (38).

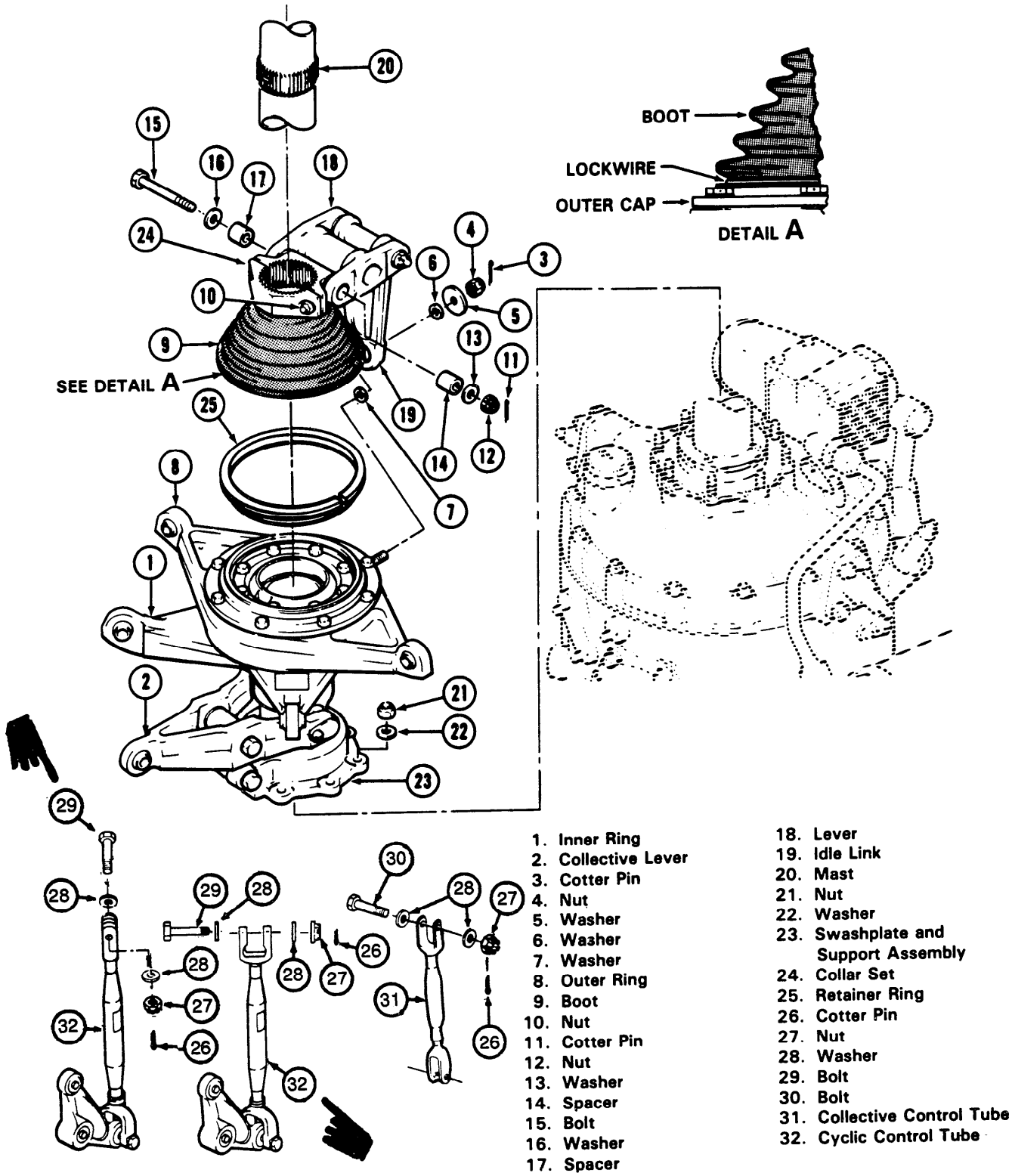

Figure 5-38. Removal — Swashplate and Support Assembly

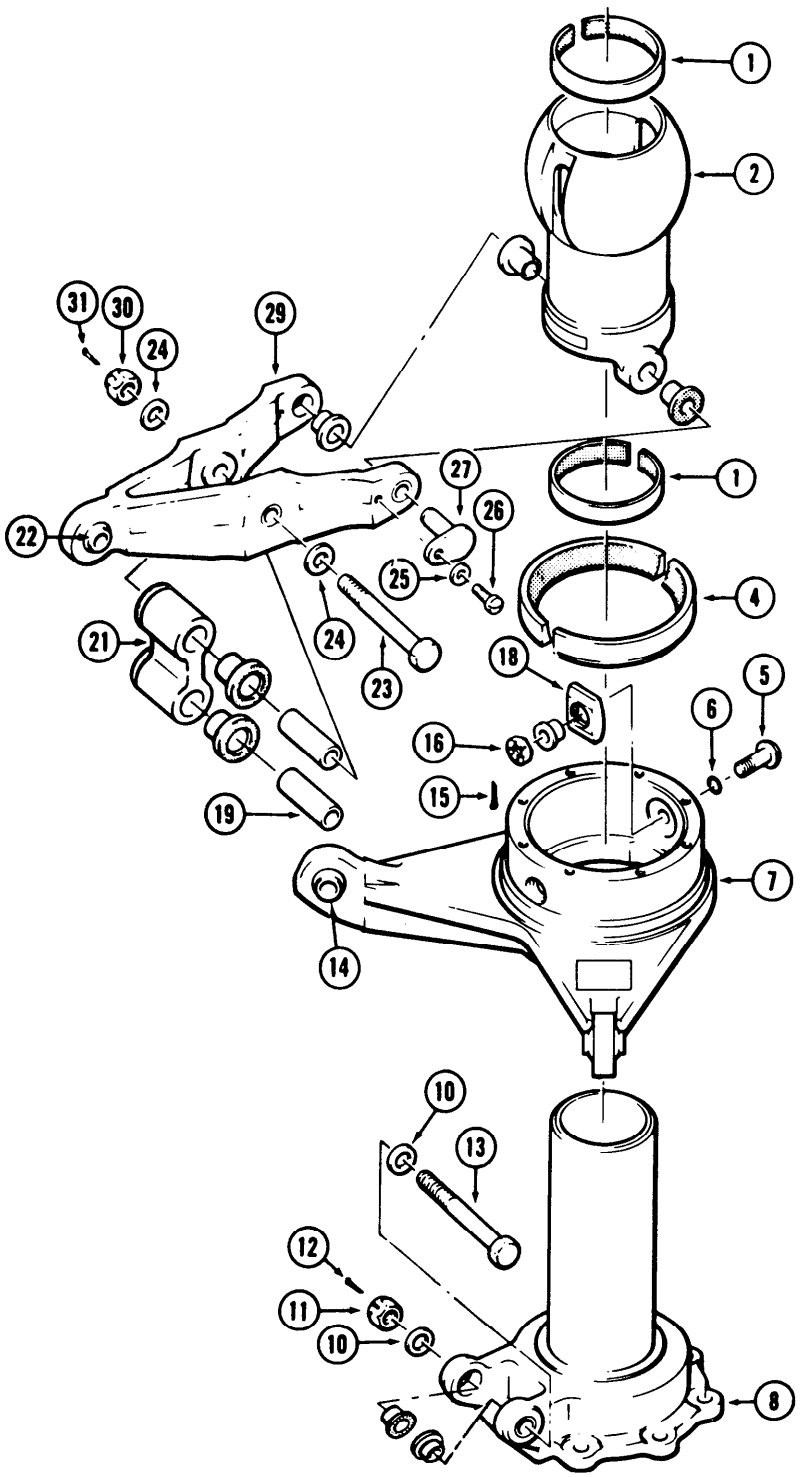

1. Sleeve Bearing
2. Pivot Sleeve
3. Bushing
4. Bearing Set
5. Bolt
6. Packing
7. Inner Ring
8. Support
9. Bushing
10. Washer
11. Nut
12. Cotter Pin
13. Bolt
14. Spherical Bearing
15. Cotter Pin
16. Nut
17. Bushing
18. Slider Bearing
19. Spacer
20. Bushing
21. Link
22. Spherical Bearing
23. Bolt
24. Washer
25. Washer
26. Screw
27. Pin
28. Bushing
29. Collective Lever
30. Nut
31. Cotter Pin
32. Washer
33. Bolt
34. Outer Cap
35. Bolt
36. Washer
37. Grease Fitting
38. Seal
39. Shim
40. Inner Cap
41. Duplex Bearing
42. Outer Ring
43. Spherical Bearing
44. Stud

Figure 5-39. Swashplate and Support Assembly (Sheet 1 of 3)

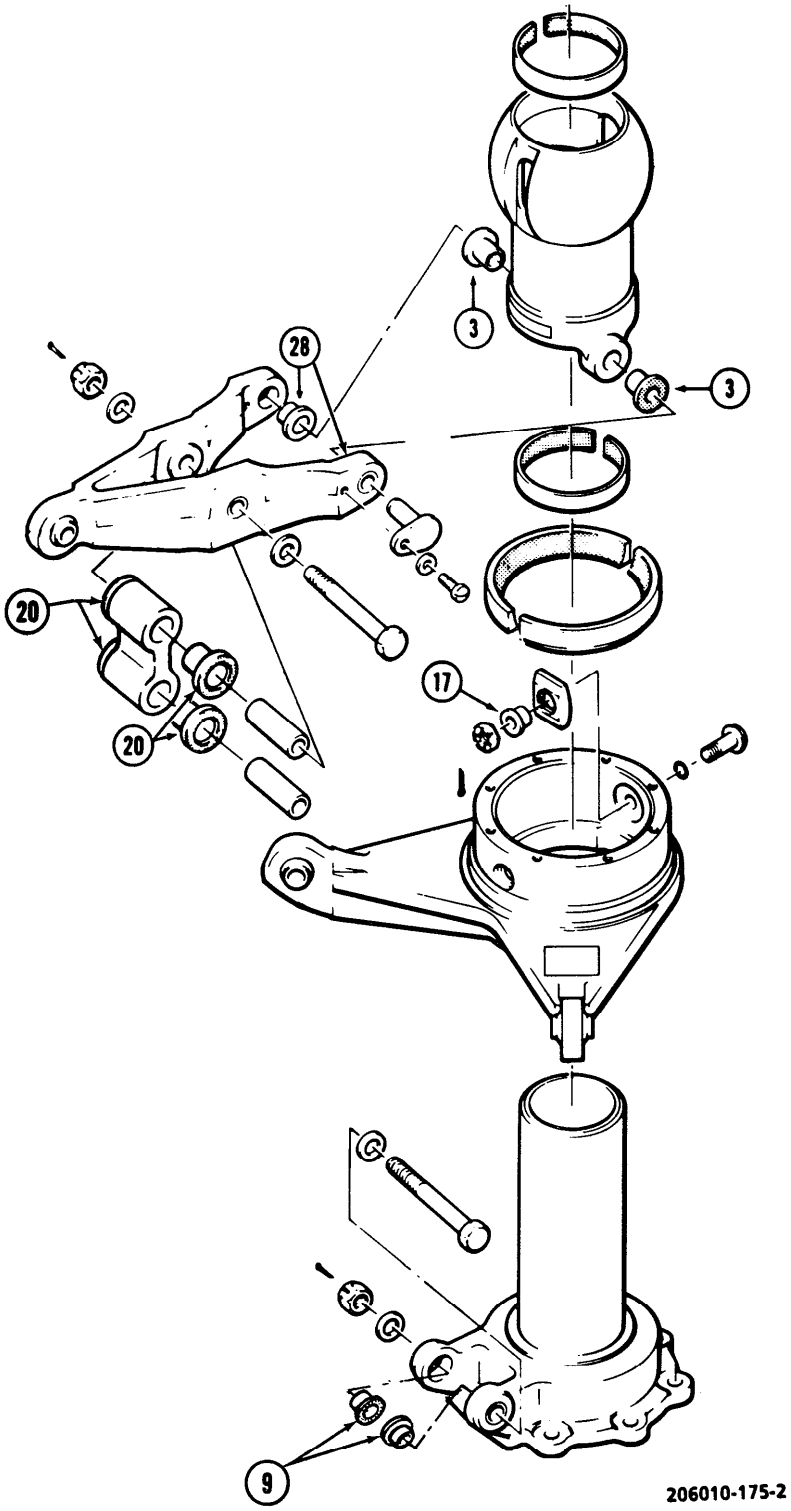

Figure 5-39. Swashplate and Support Assembly (Sheet 2 of 3)

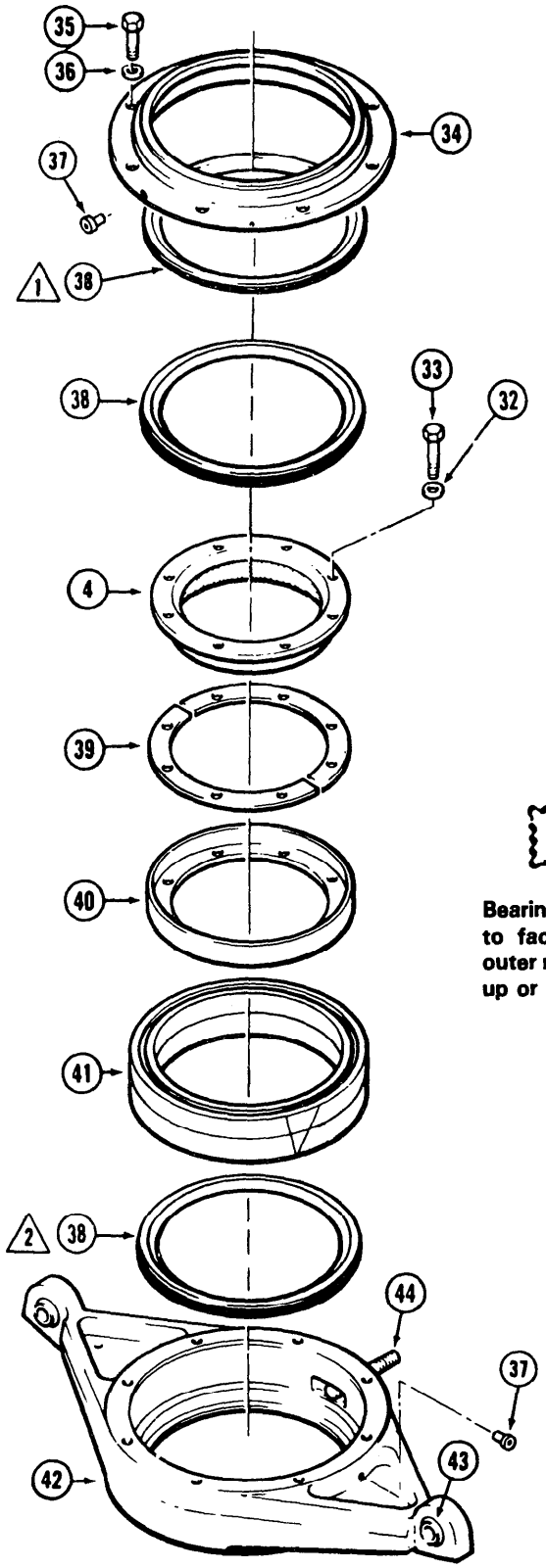

NOTES:

1. The midseal is used on P/N 206-010-450-5 which contains cap P/N 206-010-456-1.

2. The bottom seal is installed on P/N 206-010-450-7 and -9 with lip pointing down. (These assemblies have the P/N 206-010-444-1 cap installed and do not use the midseal).

CAUTION

Bearings (41) must be installed face to face (etched "V" on bearing outer race aligned and base of "V" up or down.

Figure 5-39. Swashplate and Support Assembly (Sheet 3 of 3)

c. Remove inner ring (7) from pivot sleeve (2) as follows:

NOTE

Bushing (17) and slider bearings (18) must be maintained as a matched set.

(1) Remove cotter pins (15), nuts (16), bushings (17), slider bearings (18), and bolts (5) from slot in pivot sleeve (2) and inner ring (7). Discard packing (6).

(2) Raise pivot sleeve (2) in inner ring (7) and remove lower half bearing set (4) from inner ring.

(3) Remove pivot sleeve (2), from inner ring (7).

d. Remove upper and lower sleeve bearings (1) from pivot sleeve (2).

5-116. CLEANING — SWASHPLATE AND SUPPORT ASSEMBLY (AVIM).

WARNING

Degreasing Solvent is combustible and toxic to eyes, skin, and respiratory tract. Wear protective gloves and goggles/face shield. Avoid repeated or prolonged contact. Use only in well-ventilated areas (or use approved respirator as determined by local safety/industrial hygiene personnel). Keep away from open flames or other sources of ignition.

a. Clean all parts except teflon bearings with degreasing solvent (C62). Dry with filtered compressed air. Do not allow duplex bearings (41, figure 5-39) to spin while drying.

WARNING

Acetone is extremely flammable and toxic to eyes, skin, and respiratory tract. Wear protective gloves and goggles/face shield. Avoid repeated or prolonged contact. Use only in well-ventilated areas (or use approved respirator as determined by local safety/industrial hygiene personnel). Keep away from open flames, sparks, hot surfaces or other sources of ignition.

b. Clean teflon bearing surfaces with a clean cloth lightly dampened with acetone (C2).

5-117. INSPECTION — SWASHPLATE AND SUPPORT ASSEMBLY (AVIM).

a. Visually inspect parts for damage and corrosion in accordance with figures 5-41 through 5-46, and 5-48 and for excessive wear in accordance with figure 5-40. If a crack is suspected in any of the following parts, refer to TM 1-1520-254-23, Technical Manual Aviation Unit Maintenance (AVUM) and Aviation Intermediate Maintenance (AVIM) Manual Nondestructive Inspection Procedures for OH-58 Helicopter Series.

- — Swashplate and support assembly pivot sleeve
- — Swashplate and support assembly stud
- — Swashplate and support assembly inner ring
- — Collective lever link (idler)
- — Swashplate and support assembly pin
- — Collective lever
- — Outer ring
- — Inner cap
- — Outer cap
- — Lever (idler)

CAUTION

Do not chase threads in holes for bolts (33, figure 5-39) in inner ring (7) with standard 1/4-28 tap. These are helicoil inserts. If threads are not satisfactory, replace helicoil inserts. Do not chase threads in holes for bolts (35) in outer ring (42) with standard 1/4-28 tap. These are formed threads made with a special tool. If threads are not satisfactory, replace outer ring (42).

b. Check threads in eight threaded bolt holes in inner ring (7) and outer ring (42) for damage. Check stud (44) in outer ring for thread damage or looseness.

c. Inspect grease fitting (37) for damage and security.

d. Inspect spherical bearings (14, 22, and 43) in inner ring (7), collective lever (29) and outer ring (42) for axial and radial play. If looseness exceeds **0.020** inch axial or radial replace bearings.

e. Inspect matched duplex bearings (41) closely for minute indications of pitting, brinelling, spalling, or scoring of bearing surfaces on the races or the balls.

f. Inspect teflon lined bearings or bushings (1, 3, 4, 9, 18, and 20) for fabric looseness or teflon penetration. If teflon shows damage or fiberglass base is exposed, replace bearings or bushings. Damage up to **0.005** inch depth and no more than **0.4** square inches is allowed to the top surface of the upper portion of the bearing set.

NOTE

If any bearing of bearing set (4) does not meet the inspection criteria, the complete set must be replaced.

g. Inspect inner ring (7), outer ring (42), pivot sleeve (2), link (21), collective lever (29), and support (8) for nicks, scratches, sharp dents, and corrosion.

h. Inspect the following parts by fluorescent penetrant method (code F) if the accompanying records and/or physical appearance of component indicates that the component has been subjected to an accident or incident outside of the realm of normal usage. Refer to TM 55-1500-335-23.

ITEM NO.	NOMENCLATURE	CODE
2	Pivot Sleeve	F
44	Stud (bolt)*	F
7	Inner Ring	F
8	Swashplate Support	F
21	Idler	F
27	Pin	F
29	Lever	F
*42	Outer Ring	F
40	Inner Cap	F
34	Outer Cap	F

* Do not press stud out of outer ring; penetrant inspect visible portion.

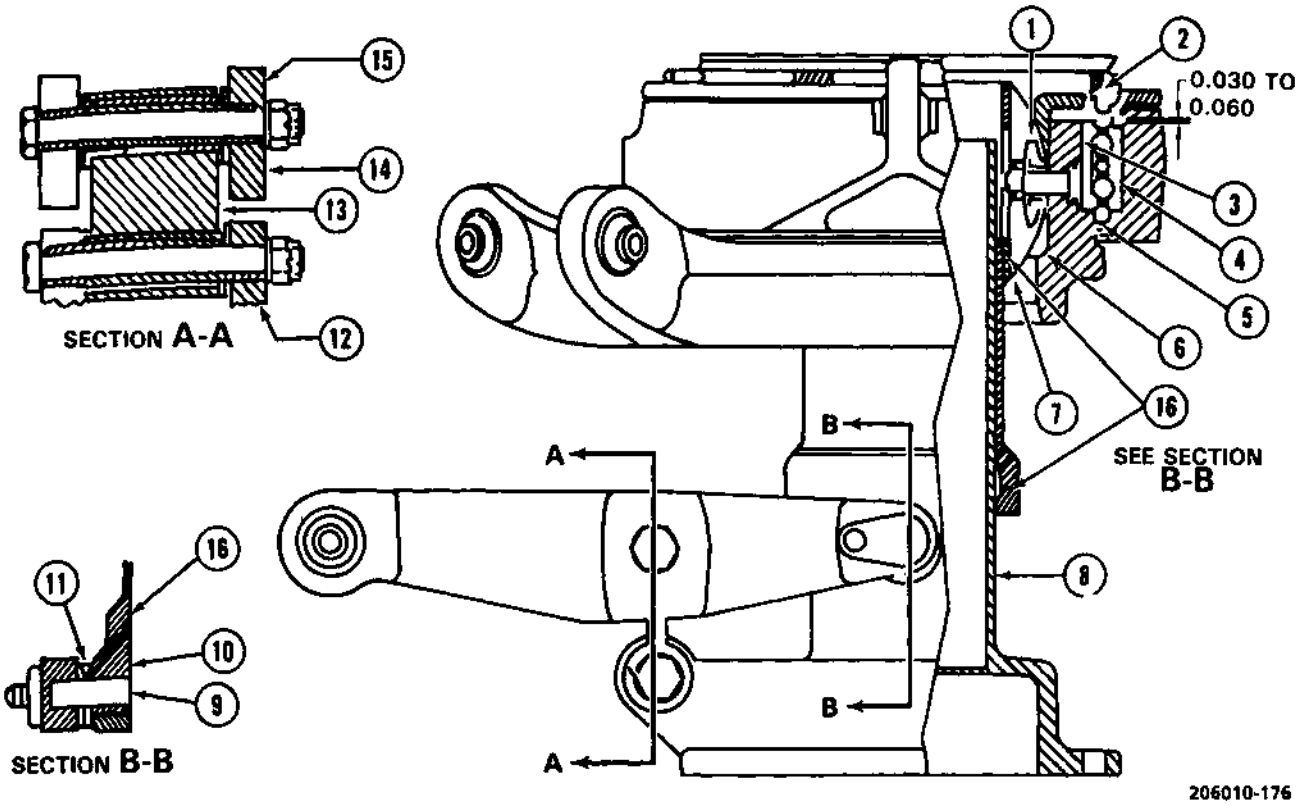

ITEM	NOMENCLATURE		MIN	MAX	REPLACE
1.	Bearing (Width of Teflon Surfaces)	O.D.	0.872	0.874	If Teflon shows any damage or if fiberglass base is exposed.
2.	Inner Cap	O.D.	NA	NA	Groove maximum depth 0.020 inch
3.	Inner Ring	O.D.1	4.999	5.000	4.997 after smooth contour clean up.
4.	Outer ring	I.D.	6.125	6.126	6.128
5.	Inner Ring	O.D.2	NA	NA	Grove maximum depth 0.020 inch
6.	Inner Ring	I.D.	4.125	4.127	after smooth contour clean up.
7.	Pivot Sleeve Sphere (Sphere Diameter must be Spherical within 0.001)	O.D.	4.001	4.003	3.999
	Pivot Sleeve Sphere Slots	I.D.	0.875	0.880	Maximum 0.002 wear below adjacent unworn surface
8.	Swashplate Support	O.D.	2.560	2.562	2.558
9.	Pin	O.D.	0.3735	0.3745	0.372
10.	Pivot Sleeve Teflon Lined Bearings	I.D.	0.3755	0.3765	0.385
11.	Collective Lever Bushings	I.D.	0.3750	0.3755	0.379
12.	Swashplate Support Boss Bushings (Boss Bushings Must Pass 0.3745 Diameter Gage Pin)	I.D.	0.3750	0.3755	0.379
13.	Link Bushings	I.D.	0.5620	0.5630	0.570
14.	Spacer	O.D.	0.5610	0.5615	0.560
15.	Collective Lever Bushings	I.D.	0.3750	0.3755	0.379
16.	Bearing Teflon Pivot Sleeve	NA	NA	NA	If Teflon shows any damage or if fiberglass base is exposed.

NOTE: All dimensions are in inches.

Figure 5-40. Swashplate and Support Assembly — Limits Chart

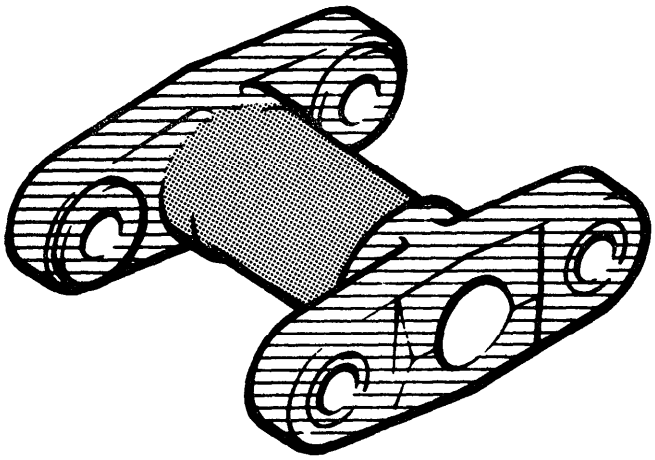

206010-177

	AREA A	AREA B
TYPE OF DAMAGE	MAXIMUM DEPTH	
NICKS, SCRATCHES, SHARP DENTS	0.010	0.030
CORROSION	0.005	0.015

NOTES:

1. Area A is restricted to one repair area per lug. Minimum radius of repair is 0.500 inch.
2. Area B may have two repair areas, but should not overlap. Minimum radius of repair area is 0.350 inch.
3. Coat repair areas with chemical conversion coating (C38).
4. No cracks are permitted.
5. All dimensions are in inches.

Figure 5-41. Inspection and Repair Limits — Lever

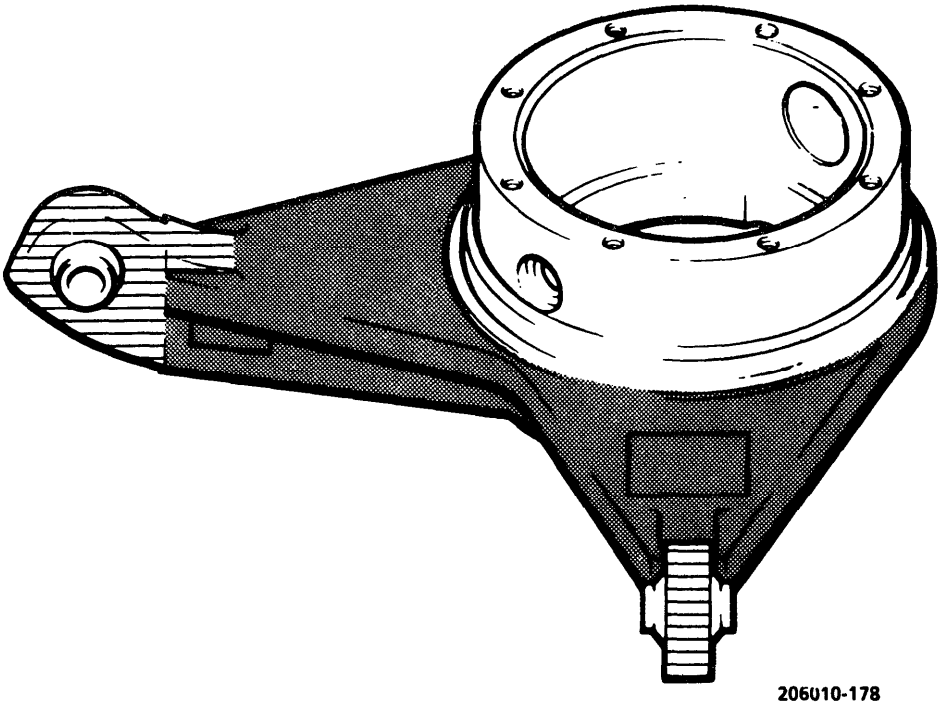

	AREA A	AREA B	AREA C
TYPE OF DAMAGE	MAXIMUM DEPTH		
NICKS, SCRATCHES, SHARP DENTS	0.010	0.030	0.040
CORROSION	0.005	0.015	0.020

NOTES:

1. Area A is restricted to one repair per lug. Minimum radius of repair is 0.500 inch.

2. Area B may have three repair areas per lug. No repairs should overlap. Minimum radius of repair is 0.350 inch.

3. Area C may have two repairs per surface. Minimum radius of repair is 0.350 inch. Seal groove maximum depth of 0.020 inch after a smooth contour cleanup.

4. Surface should only receive minor damage that when repaired will not interrupt the function of the seal.

5. Repaired areas should be coated with chemical conversion coating (C38).

Figure 5-42. Inspection and Repair Limits — Inner Ring

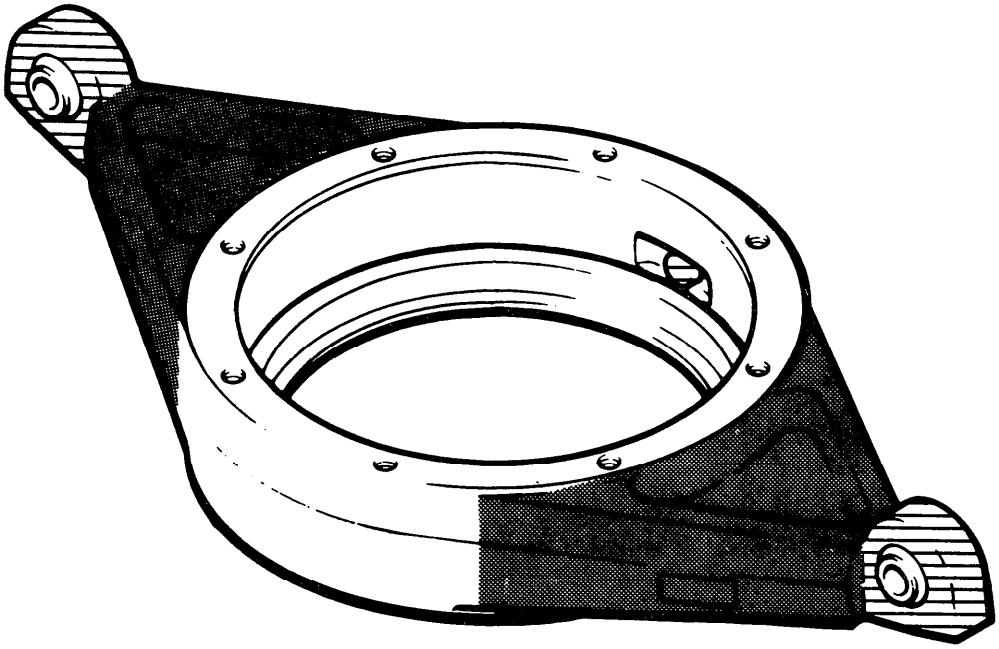

206010-179

	AREA A	AREA B	AREA C
TYPE OF DAMAGE		MAXIMUM DEPTH	
NICKS, SCRATCHES, SHARP DENTS	0.010	0.030	0.060
CORROSION	0.005	0.015	0.030

NOTES:

1. Area A is restricted to one repair per lug. Minimum radius of repair is 0.500 inch.
2. Area B may have three repair areas per arm. No repairs should overlap. Minimum radius of repair is 0.350 inch.
3. Area C may have four repair areas. No repairs should overlap. Minimum radius of repair is 0.350 inch.
4. This surface should receive only minor damage which when repaired will not interrupt the function of the seal.
5. Repaired areas should be coated with chemical conversion coating (C38).
6. Replace stud if threads are damaged.
7. All dimensions are in inches.

Figure 5-43. Inspection and Repair Limits — Outer Ring

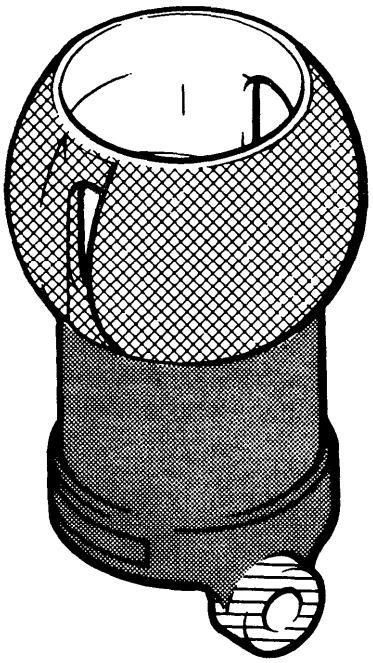

206010-180

TYPE OF DAMAGE	AREA A	AREA B	AREA C
	MAXIMUM DEPTH		
NICKS, SCRATCHES, SHARP DENTS	0.010	0.030	See Note 3
CORROSION	0.005	0.015	

NOTES:

1. Area A is restricted to one repair area per lug. A repair must have a minimum radius of 0.500 inch.

2. Repairs in area B must have a minimum radius of 0.350 inch. Repairs should not overlap, nor exceed three in number.

3. Area C must not have any damage that penetrates the hard anodized flame sprayed surface in the active bearing area.

4. Repairs on areas A end B should be coated with chemical conversion coating (C38).

5. Retirement interval is 4800 hours.

Figure 5-44. Inspection and Repair Limits — Collective Sleeve

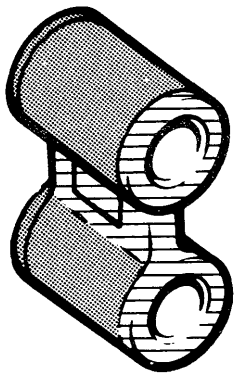

206010-181

	AREA A	AREA B
TYPE OF DAMAGE	MAXIMUM DEPTH	
NICKS, SCRATCHES, SHARP DENTS	0.010	0.030
CORROSION	0.005	0.015

NOTES:

1. The idler may have two repair areas per cylinder and one on the web.
2. Repair areas should not overlap.
3. Minimum radii for repairs are: A = 0.500, B = 0.350.
4. Coat all repaired areas with chemical conversion coating (C38).
5. No cracks are permitted.
6. Retirement interval is 4800 hours.
7. All dimensions are in inches.

Figure 5-45. Inspection and Repair Limits — Collective Lever Link (Idler)

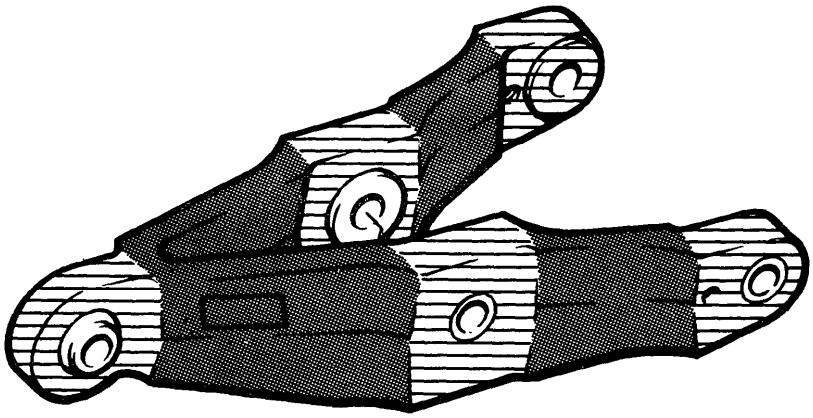

206010-182

TYPE OF DAMAGE	AREA A	AREA B
	MAXIMUM DEPTH	
NICKS, SCRATCHES, SHARP DENTS	0.010	0.030
CORROSION	0.005	0.010

NOTES:

1. Area A is limited to one repair area per lug. Minimum radius of repair is 0.050 inch.
2. Area B may have two repair areas per segment. No repair should overlap. Minimum radius of repair is 0.350 inch.
3. Coat all repair areas with chemical conversion coating (C38).
4. No cracks are permitted.
5. Retirement interval is 4800 hours.
6. All dimensions are in inches.

Figure 5-46. Inspection and Repair Limits — Collective Lever

5-118. REPAIR — SWASHPLATE AND SUPPORT ASSEMBLY (AVIM).

a. Polish out acceptable nicks, scratches, sharp dents, and corrosion as follows: (Refer to figures 5-42 through 5-50.)

(1) Polish out acceptable damage with sandpaper (C126) and blend into surrounding surface.

(2) Treat repaired areas with chemical conversion coating (C38).

b. Replace all worn or damaged parts that exceed limits specified in figures 5-40 through 5-50. If inner ring (7, figure 5-39) seal area (5, figure 5-40) and inner cap (40) seal area (2, figure 5-40) are grooved or have been reworked, position a new seal (38, figure 5-39) in the grooved area to ensure lip of seal contacts the entire ring or cap circumference.

c. Replace defective duplex bearings (41). Duplex bearings must be replaced as a serial numbered matched set only.

WARNING

Acetone is extremely flammable and toxic to eyes, skin, and respiratory tract. Wear protective gloves and goggles/face shield. Avoid repeated or prolonged contact. Use only in well-ventilated areas (or use approved respirator as determined by local safety/industrial hygiene personnel). Keep away from open flames, sparks, hot surfaces or other sources of ignition.

d. Replace defective bushing (3, 9, 20, and 28) by pressing bushing from part with suitable tools. Remove zinc chromate primer from part with acetone (C2). Coat shank of new bushings with wet unreduced zinc chromate primer (C118) and press flush into part. Remove excessive squeezed out primer. If new bushings (28) are installed in collective lever (29), they must be line reamed to **0.3750** inch minimum to **0.3755** inch maximum I.D. after installations. (Refer to items 11 and 15, figure 5-40.)

e. Install new seals (38) as follows:

(1) Fabricate a disc or sleeve or slightly less outside diameter than seal case for pressing new seals into position.

(2) Apply a light film of adhesive (C9) to the metal outside diameter of three seals (38).

NOTE

Heating outer cap (34) and outer ring (42) with a heat lamp will facilitate seal installation. Do not exceed a temperature of 285°F (141°C) or a 2-hour time limit.

(3) Press one seal (38) into outer cap (34) with metal face of seal to the top and lip of seal down. Press a second seal (38) into cap (34) with metal face of seal down and lip of seal up. Maintain a dimension of **0.030 to 0.060** inch between bottom of lower seal and lower surface of outer cap (34). Check to ensure that the four **0.063** inch holes in outer cap (34) are not obstructed by seals.

NOTE

Refer to notes on figure 5-39 to ensure proper seal installation.

(4) Press one seal (38) to lower inside flange of outer ring (42) until fully seated with metal face down and lip seal up. Coat lip of seal with grease (C77).

f. If bearings (14, 22, and 43) and bearing in idler link (11, figure 5-36) are defective or worn more than **0.020** inches parallel to bolt hole axis, replace as follows:

(1) Remove unserviceable spherical bearings by supporting the assembly in an arbor press using a suitable size sleeve (I.D. slightly larger than O.D. of bearing being removed) and pressing on the outer race of the bearing using a sleeve slightly smaller than the bearing outer diameter.

(2) Coat new bearing outer race surface with sealing compound (C120). Press new bearing into assembly using anvil of tool (T27).

(3) Secure spinning portion of tool (T27) in drill press chuck. Center bearing below spinning tool with bearing supported on anvil.

(4) With drill press turning **250 to 350** rpm, apply sufficient hand pressure to drill press feed in **10** second increments so roller wheels of the spinning tool roll without interruption around the pre-grooved bearing outer race. After each **10**-second increment, inspect for correct displacement of outer race metal into hole chamber of parent assembly.

(5) Turn bearing over and repeat operation on other side of bearing.

(6) Breakout of misalignment torque on bearings after installation must not exceed **10** pounds. An acceptable method for checking this torque is to install an NAS 1305-27D bolt through the

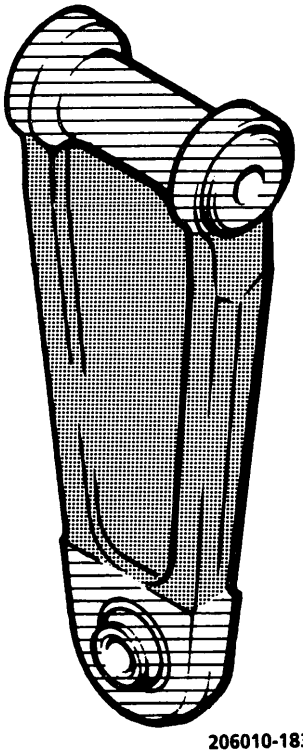

206010-183

TYPE OF DAMAGE	AREA A (MAXIMUM DEPTH)	AREA B (MAXIMUM DEPTH)
NICKS, SCRATCHES, SHARP DENTS	0.010	0.030
CORROSION	0.005	0.015

NOTES:

1. Area A is restricted to one repair area per lug. Minimum radius of repair is 0.050 inch.
2. Area B may have three repair areas. No repair areas may overlap. Minimum radius of repair is 0.350 inch.
3. Repair areas should be coated with chemical conversion coating (C38).
4. No cracks are permitted.
5. All dimensions are in inches.

Figure 5-47. Inspection and Repair Limits — Pylon (Idler) Link

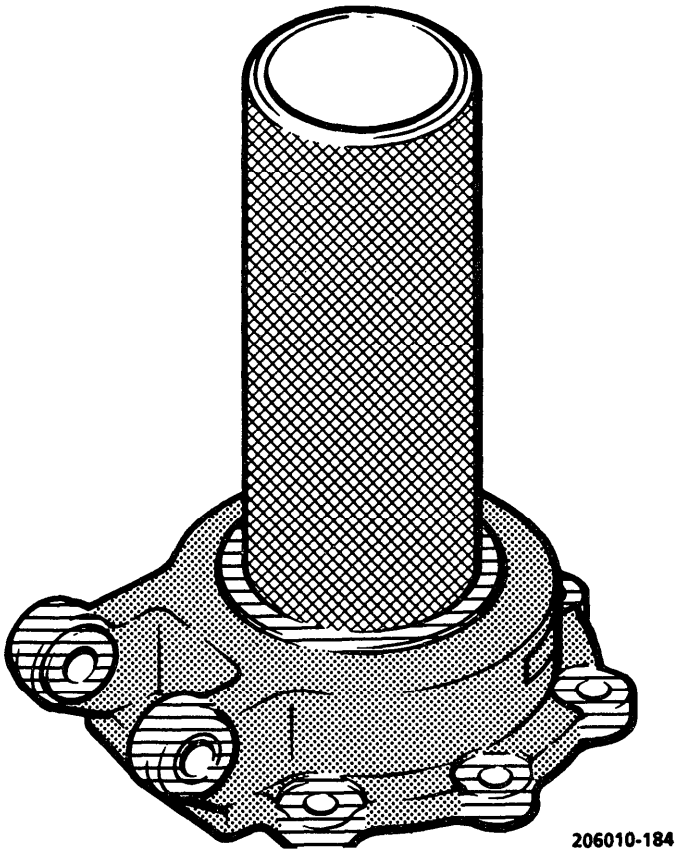

	AREA A	AREA B	AREA C
TYPE OF DAMAGE	MAXIMUM DEPTH		
NICKS, SCRATCHES, SHARP DENTS	0.010	0.030	See Note 3
CORROSION	0.005	0.015	

NOTES:

1. Area A is restricted to one repair area per lug. Minimum radius of repairs is 0.500 inch.
2. Area B may have three repairs, none overlapping. Minimum radius of repair is 0.350 inch.
3. Area C must not have any damage that penetrates the hard anodized surface. Minor scratches may be cleaned up with crocus cloth. Maximum material removal is 0.0005 inch.
4. Repairs on areas A and B should be coated with chemical conversion coating (C38).
5. No cracks are permitted.
6. Retirement interval is 4800 hours.
7. All dimensions are in inches.

Figure 5-48. Inspection and Repair Limits — Support Pylon (Swashplate)

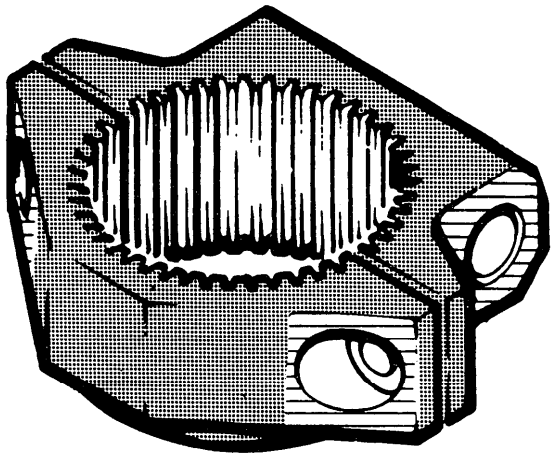

206010-185

TYPE OF DAMAGE	MAXIMUM DEPTH AREA A	MAXIMUM DEPTH AREA B
NICKS, SCRATCHES, SHARP DENTS	0.005	0.030
CORROSION	0.005	0.015

NOTES:

1. Area A may have one repair area per lug. Face minimum radius of repair is 0.500 inch.
2. Area B may have two repair areas per collar. Repairs should not overlap. Minimum radius of repair is 0.350 inch.
3. Nicks and dents on the splines may be cleaned up to ONE THIRD OF THE SPLINE DEPTH FOR HALF THE LENGTH of the spline. A maximum of three splines may receive cleanup.
4. No cracks are permitted.
5. All dimensions are in inches.

Figure 5-49. Inspection and Repair Limits — Collar Set — Pylon (Swashplate)

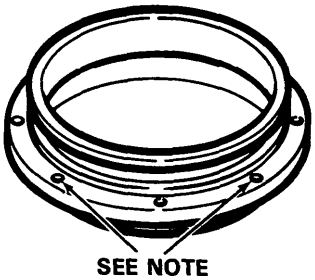

206010-186

DAMAGE LOCATION SYMBOLS

TYPE OF DAMAGE	MAXIMUM DAMAGE AND REPAIR DEPTH
MECHANICAL	0.010 in. before and after repair
CORROSION	0.005 in. before and 0.010 in. after repair
MAXIMUM AREA PER FULL DEPTH REPAIR	0.100 sq. in.
NUMBER OF REPAIRS	Not critical
EDGE CHAMFER	0.030 in.

NOTE: Bore damage not to exceed 0.002 inch for full circumference.

Figure 5-50. Outer Cap — Damage Limits

bearing and install a cotter pin in the end of the bolt. Bottom bolt head against bearing and hook a scale through head of cotter pin. Pull scale and note force required to move bearing inner race. If the reading is in excess of **10** inch-pounds, the bearing may be burnished by spinning at **60 to 100** rpm for one to two minute periods until a satisfactory torque leading is obtained. Do not allow assembly to overheat (staked area not uncomfortable to touch due to heat).

5-119. ASSEMBLY — SWASHPLATE AND SUPPORT ASSEMBLY (AVIM).

WARNING

If swashplate and support assembly P/N 206-010-450-9 is being installed, ensure that TB 55-1520-228-20-24 has been applied.

Swashplate and support assemblies containing cap P/N 206-010-456-1 are lubricated through a grease fitting in the outer ring. The grease is forced up through the duplex bearing, and vented outboard through the four holes in the cap.

Swashplate and support assemblies containing cap P/N 206-010-444-1 must be lubricated through a grease fitting in the cap. The grease if forced down through the duplex bearing and out through the lower seal.

CAUTION

Swashplate and support assemblies may have either cap, P/N 206-010-441-1 or P/N 206-010-456-1 installed. Either cap may be used. If cap P/N 206-010-456-1 is used, a midseal is required (38, figure 5-39). If cap P/N 206-010-444-1 is used, the bottom seal is installed with lip pointing down (20, figure 5-35). When assembling any configuration of swashplate, the correct number of seals and their installation must correspond to the cap used to ensure proper lubrication. See lubrication instructions, figure 1-5.

NOTE

The following installation procedure applies to swashplate and support assembly P/N 206-010-450-5, which contains cap P/N 206-010-456-1. Swashplate and support assemblies P/N 206-010-450-7 and -9 contain cap assembly P/N 206-010-444-1 and do not have a midseal. In addition, the lower seal is installed with the lip pointing down. See figure 5-35, detail B.

When cap assembly P/N 206-010-444-1 is installed, retainer P/N 206-010-351-1 is not required and cannot be installed.

a. Install two serviceable sleeve bearings (1, figure 5-39) into pivot sleeve (2).

b. Support inner ring (7) on wooden blocks to allow sleeve (2) to hang free when installed. Install pivot sleeve (2) and lower two halves of bearing set (4) into inner ring (7). Ensure bearing halves are fully seated in inner ring (7).

c. Secure inner ring (7) and pivot sleeve (2) as follows:

CAUTION

To prevent contact with and damage to bearing set (4), ensure slider bearings (18), are properly installed with flange of bushing (17) facing inboard.

(1) Install new packings (6) on bolts (5) and insert into inner ring (7) and pivot sleeve (2). Position slider bearings (18). bushings (17), and nuts (16) on shank of bolts (5) from the pivot sleeve side.

(2) Torque nuts (16) to **60 TO 85 INCH-POUNDS** (plus friction drag of nut) and secure with cotter pins (15). Ensure that tangs of cotter pins will not contact pivot sleeve (2) or support (8) when installed.

(3) Position inner ring (7) and pivot sleeve (2) on support (8).

WARNING

Degreasing Solvent is combustible and toxic to eyes, skin, and respiratory tract. Wear protective gloves and goggles/face shield. Avoid repeated or prolonged contact. Use only in well-ventilated areas (or use approved respirator as determined by local safety/industrial hygiene personnel). Keep away from open flames or other sources of ignition.

d. Clean serviceable duplex bearings (41) with degreasing solvent (C62) and dry with filtered compressed air. Do not allow bearings to turn while drying. Hand-pack duplex bearings (41) with grease (C77).

e. Lubricate bore of outer ring (42) and shaft of inner ring (7) with grease (C77).

f. Check duplex bearings (41) to ensure they are a matched serial number set; position bearings face to face (etched "V" on outer races aligned) and install into outer ring (42). The base of the "V" can point either up or down.

g. Position outer ring (42) with duplex bearings (41) and seal (38) installed, onto inner ring (7). Apply equal pressure to both inner and outer races of duplex bearing.

h. Apply a film of preservative compound (C51) to mating surface of outer cap (34) and outer ring (42).

i. Position outer cap (34) on outer ring (42) and install eight bolts (35) and washers (36). Ensure recessed side of washers are next to heads of bolts. Do not torque bolts at this time.

NOTE

On 206-010-441-1 cap assembly, place grease fitting opposite stud in the outer ring.

j. Install inner cap (40), shims (39), and top half of bearing set (4) as follows:

(1) Locate and identify index marks applied to top half of bearing set (4) if original bearing is being reused.

(2) Temporarily install four threaded studs, evenly spaced into inner ring (7) as work aid for shim (39) and bearing (4) alignment; studs should be about **4** inches long.

(3) Apply a thin coat of adhesive (C9) to mating surfaces of inner cap (40) and inner ring (7). Install seal (38) in outer cap (34).

(4) Lightly grease (C77) lips of seals (38) in outer cap (34) and install inner cap (40) over the 4 studs onto the inner ring (7). Take care not to distort or change the position of the lips of seals (38).

(5) Install shims over the 4 studs into the top of inner cap (40). Use same amount of (thickness) of shims as removed during disassembly. Assure each segment of shims are equal thickness. This is to be used as a starting point and may be changed during friction adjustment.

(6) Install top half of bearing set (4) to shims (39) and inner cap (40). Align index marks if applicable.

NOTE

Do not intermix bolts (33 and 35); damage to threaded inserts will result.

(7) Install fours bolts (33) and washers (32) with recess of washers next to bolt head and torque to **40 INCH-POUNDS** in sequence opposite to each other. Remove four work aid studs and install four remaining bolts (33) and washers (32), torque to **40 INCH-POUNDS** in sequence opposite of each other. Apply final torque of **50 TO 70 INCH-POUNDS** to all 8 bolts (33) in sequence opposite of each other. Secure bolts with lockwire (C96) after friction adjustment is checked.

(8) Tighten eight bolts (35) in outer cap (34) evenly until reaching a torque of **50 TO 70 INCH-POUNDS**. Secure bolts with lockwire (C96).

k. Check that outer ring (42) will rotate on inner ring (7) through **360** degrees rotation in both directions with moderate friction and no rough spots.

l. Install collective lever (29) and link (21) as follows:

(1) Insert two spacers (19) into link (21) and position between center bushings in collective lever (29). The word "TOP" is embossed on the lever to indicate proper position. Install bolt (23), washer (24), and nut (30). Torque nut (30) to **95 TO 110 INCH-POUNDS** plus friction drag torque of nut and secure with cotter pin (31).

(2) Position collective lever (29) and link (21) to support (8). Secure link (21) to support (8) with bolt (13) washers (10), and nut (11). Torque nut (11) to **95 TO 110 INCH-POUNDS** plus friction drag torque of nut and secure with cotter pin (12).

(3) Position collective lever (29) to pivot sleeve (2) and install pins (27). Secure pins (27) with screws (26) and washers (25). Torque screws (26) to **20 TO 25 INCH-POUNDS** and lockwire (C96) to collective lever (29).

m. Fasten swashplate and support assembly to work bench. Use C clamps, or drill two holes in work bench and bolt support (8) directly to bench. Accomplish the following:

NOTE

For swashplate and support assembly equipped with cap, P/N 206-010-444-1, lubricate duplex bearing (41) through grease fitting in the cap with grease (C77) until a small amount of grease flows from the lower seal. Lip on lower seal points down.

(1) Purge-lubricate duplex bearings (41) through grease fitting (37) with grease (C77) until grease flows from one or more of the four holes in outer cap (34). Rotate outer ring (42) **360** degrees in **90** degree increments, repeating the above procedure each increment.

(2) Check collective (vertical) operation of swashplate and support assembly for smooth movement with no binding or hard spots.

(3) Check for clearance between the support (8) and pivot sleeve (2). Grasp pivot sleeve (2) and attempt to move it laterally on support (8). If clearance is **0.020** inch or more, replace sleeve bearings (1).

(4) Check for friction adjustment and adjust as required. Refer to paragraph 5-120.

5-120. ADJUSTMENT — SWASHPLATE AND SUPPORT ASSEMBLY (AVIM).

NOTE

The following specifications and procedures apply to buildup only. For AVUM adjustment, refer to paragraph 5-113.

a. Fasten swashplate and support assembly to work bench. Drill at least two holes in work bench and bolt swashplate support (8, figure 5-39) directly to bench.

b. Tilt and rotate swashplate outer ring (42) several times as necessary to seat bearings (4) to pivot sleeve (2).

c. Place swashplate in a level position on pivot sleeve and attach a spring scale to either of the self-aligning bearings in outer ring (42) tang.

d. Pull scale vertically (upward smooth process; DO NOT JERK SCALE) to tilt outer ring on pivot sleeve and NOTE POUNDS of friction on scale.

e. The values for forward, aft and lateral friction adjustment range shall be from **24 to 32** pounds indicated on scale.

NOTE

The 4.000 pounds value for breakaway torque differs for AVUM and AVIM. This allows AVUM longer trouble free operation of this item.

f. The variation of breakaway torque at the forward, aft and lateral positions checked shall not exceed **4.000** pounds within the friction range.

g. Repeat check three or more times at each position to insure proper friction adjustment.

h. A friction adjustment in excess of **24 to 32** pounds or a variation of breakaway torque in excess of **4.000** pounds is not acceptable. Refer to paragraph 5-117.

5-121. INSTALLATION — SWASHPLATE AND SUPPORT ASSEMBLY.

WARNING

If swashplate and support assembly P/N 206-010-450-9 is being installed, ensure that TB 55-1520-228-20-24 has been applied.

WARNING

Swashplate and support assemblies containing cap P/N 206-010-444-1 must be lubricated through a grease fitting in the cap. The grease is forced down through the duplex bearing and out through the lower seal.

Swashplate and support assemblies containing cap P/N 206-010-456-1 are lubricated through a grease fitting in the outer ring. The grease is forced up through the duplex bearing, and vented outboard through the four holes in the cap.

NOTE

The following installation procedure applies to swashplate and support assembly P/N 206-010-450-5, which contains cap P/N 206-010-456-1. Swashplate and support assemblies P/N 206-010-450-7 and -9 contain cap assembly P/N 206-010-444-1 and do not have a midseal. In addition, the lower seal is installed with the lip pointing down. See figure 5-35, detail B.

NOTE

The following installation procedure applies to swashplate and support assembly P/N 206-010-450-5, which contains cap P/N 206-010-456-1. Swashplate and support assemblies P/N 206-010-450-7 and -9 contain cap assembly P/N 206-010-444-1 and do not have a midseal. In addition, the lower seal is installed with the lip pointing down. See figure 5-35, detail B.

a. Lower swashplate and support assembly over mast and position on transmission studs with collective pitch lever at the one o'clock position. Install eight nuts (21, figure 5-38) and washers (22). Torque nuts (21) **120 TO 140 INCH-POUNDS**.

b. Position retainer ring (25) on swashplate. Position boot (9), lever (18), and collar set (24) on mast. Install two washers (32, figure 5-36) and bolt (33). Install bolt in collar set (18) and install washer (31) on bolt and secure with nut (17). Ensure that bolt (15, figure 5-38) is properly positioned in the groove provided in the mast and that two spacers (14 and 17) and washers (13 and 16) are in place. Torque nut (12) **100 TO 140 INCH-POUNDS**. Torque nuts (10) **50 TO 70 INCH-POUNDS**. Install cotter pin (11). Apply sealant (C129) to cover space between collar halves and prevent foreign matter entry. Encircle entire area.

NOTE

Heads of all bolts to be installed in direction of rotation except bolts through collar set (24) which are to be installed with bolt heads toward lever (18) to ensure proper clearance.

c. Install bolt to connect lever (18) and idler link (19) if not previously accomplished. Spacers, washers, torque, and cotter pin requirements are the same as the call out for bolt (15) in step b.

d. Install washer (7) first, then attach idler link (19) to outer ring of swashplate. Install washers (6 and 5) and install and torque nut (4) **60 TO 85 INCH-POUNDS**. Install cotter pin (3).

e. Secure boot (9) to swashplate and collar set with double wrap lockwire (C96).

CAUTION

Ensure sealing compound is applied only to the outer edge of the assembled seal, plate liner, and mating area of the top case.

NOTE

The following step is required if mast assembly is installed or seal made by sealing compound is suspected of being defective.

f. Apply a bead of sealing compound (C131) to the outer edge of assembled seal plate and liner, and mating area of top case. When sealing compound is dry, remove excess, using sharpened plastic scraper. Do not use metal scraper. Refer to figure 6-17.

NOTE

Ensure that support assembly base drain holes are open and free of foreign matter.

g. Attach collective control tube (31, figure 5-38) to collective lever (2) using bolt (30), washers (28), nut (27), and cotter pin (26).

h. Attach two cyclic control tubes (32, figure 5-38) to swashplate inner ring (1) using bolts (29), washers (28), nuts (27), and cotter pins (26).

i. Install main rotor hub and blade assembly. Refer to paragraph 5-10.

j. Lubricate swashplate until grease is vented through the cap if cap 206-010-456-1 is installed or through the lower seal if cap 206-010-444-1 is installed. Refer to figure 5-50.

5-122. PIVOT SLEEVE.

5-123. DESCRIPTION — PIVOT SLEEVE. The swashplate assembly is mounted on the pivot sleeve (2, figure 5-39) and permits the swashplate assembly to be raised or lowered and tilted in any direction with corresponding movement transferred to the main rotor.

5-124. INSPECTION — PIVOT SLEEVE. Inspect pivot for wear, cracks, nicks, dents, and corrosion. If crack in the pivot sleeve is suspected, refer to TM 1-1520-254-23, Technical Manual Aviation Unit Maintenance (AVUM) and Aviation Intermediate Maintenance (AVIM) Manual Nondestructive Inspection Procedures for OH-58 Helicopter Series.

5-125. REMOVAL — PIVOT SLEEVE (AVIM). Refer to paragraph 5-114.

5-126. REPAIR — PIVOT SLEEVE (AVIM).

a. Refer to figure 5-44 for repair limits.

b. No cracks are permitted. Replace pivot sleeve.

c. The following rework of the pivot sleeve assembly may be accomplished to facilitate ease in future removal of bearings. (Refer to figure 5-51.)

(1) Mark lower casting of pivot sleeve directly opposite nameplate and at center point of sleeve shoulder if bearings (1, figure 5-39) are removed for any reason. Do not mark any part of the vibro-etched serial number on sleeve.

NOTE

Hole to be drilled in shoulder of sleeve casting in the following step will facilitate future removal of lower bearing and preclude damage to sleeve casting. Make certain bearing has been removed from groove of sleeve prior to drilling hole.

(2) Drill a **1/8 (0.125)** inch-diameter hole in sleeve casting at point marked. Chamfer hole on both sides **0.015 (± 0.010)** inch, and brush alodine chemical conversion coating (C38) over the hole area.

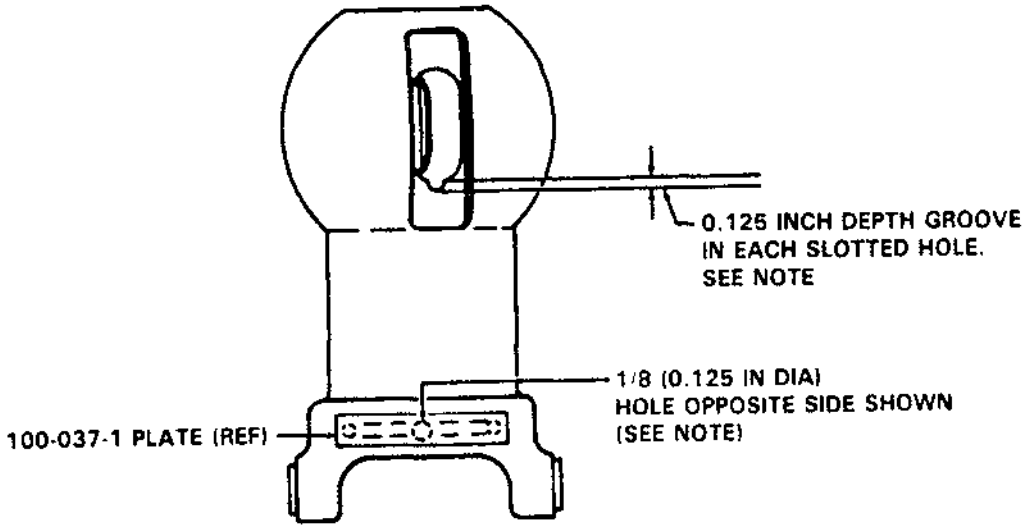

NOTE

ADDITION OF GROOVES AND HOLE IN PIVOT SLEEVE WILL FACILITATE FUTURE REMOVAL OF BEARINGS AND PRECLUDE DAMAGE TO SLEEVE CASTING.

206010-187

Figure 5-51. Rework of Pivot Sleeve Assembly

(3) When reinstalling lower bearing into sleeve, allow one end of bearing to slightly overlap the hole. (This will permit ease of bearing removal when inserting appropriate tool into hole.)

(4) After bearing has been installed in sleeve, fill the 1/8-inch hole with proseal 890 adhesive (C17) to prevent entrance of water or foreign particles into the sleeve. Allow adhesive to cure before installation.

NOTE

Shallow grooves to be made in two slotted holes of sleeve spherical ball in the following step, will facilitate future removal of upper bearing and preclude damage to sleeve casting.

(5) Mark exact center point of lower slotted holes in spherical ball of sleeve. File or cut two grooves **0.110-0.125** inch deep and **0.115-0.135** wide at points marked, one in each of the two slotted holes (Figure 5-51). DO NOT exceed **0.125** inch depth.

(6) Remove any sharp edges or burrs, if in vicinity of grooves. Wipe inner and outer surface of sleeve thoroughly with clean industrial cloth to ensure complete removal of all metal particles.

(7) Brush alodine (C38) on new cut grooves.

5-127. INSTALLATION — PIVOT SLEEVE. (AVIM).

a. Refer to paragraphs 5-119 and 5-121.

b. Refer to paragraph 5-113 for friction adjustment of inner ring to pivot sleeve.

5-128. LEVER.

5-129. DESCRIPTION — LEVER. The lever (5, figure 5-36) transfers idler link (11) movements to the collar set (18) resulting from inner ring position changes.

5-130. INSPECTION — LEVER.

a. Inspect lever for wear, cracks, nicks, dents, and corrosion. If crack in the lever (idler) is suspected, refer to TM 1-1520-254-23, Technical Manual Aviation Unit Maintenance (AVUM) and Aviation Intermediate Maintenance (AVIM) Manual Nondestructive Inspection Procedures for OH-58 Helicopter Series.

b. Refer to paragraph 5-161 for additional inspection requirements.

5-131. REMOVAL — LEVER. Refer to paragraph 5-114.

5-132. REPAIR — LEVER.

a. Refer to figure 5-41 for repair limits.

b. No cracks are permitted; replace lever.

5-133. INSTALLATION — LEVER. Refer to paragraphs 5-119 and 5-166.

5-134. INNER RING.

5-135. DESCRIPTION — INNER RING. The inner ring (28, figure 5-36 and 7, figure 5-39) is a stationary component of the swashplate assembly, and through linkage transmit cyclic inputs to the main rotor.

5-136. INSPECTION — INNER RING. Inspect inner ring for nicks, dents, wear, cracks, and corrosion. Refer to paragraph 5-117 for additional inspection requirements. If a crack in inner ring is suspected, refer to TM 1-1520-254-23, Technical Manual Aviation Unit Maintenance (AVUM) and Aviation Intermediate Maintenance (AVIM) Manual Nondestructive Inspection Procedures for OH-58 Helicopter Series.

5-137. REMOVAL — INNER RING (AVIM). Refer to paragraphs 5-114 and 5-115.

5-138. REPAIR INNER RING (AVIM).

a. Refer to figure 5-42 for repair limits and paragraph 5-118.

b. No cracks are permitted; replace inner ring.

5-139. INSTALLATION — INNER RING (AVIM). Refer to paragraphs 5-119 and 5-121.

5-140. OUTER RING.

5-141. DESCRIPTION — OUTER RING. The outer ring (29, figure 5-36 and 42, figure 5-39) is a rotating component part of the swashplate assembly, and through linkage transmits pitch control to main rotor blades.

5-142. INSPECTION — OUTER RING. Inspect outer ring for nicks, dents, wear, cracks, and corrosion. Refer to paragraph 5-117 for additional inspection requirements. If a crack in outer ring is suspected, refer to TM 1-1520-254-23, Technical Manual Aviation Unit Maintenance (AVUM) and Aviation Intermediate Maintenance (AVIM) Manual Nondestructive Inspection Procedures for OH-58 Helicopter Series.

5-143. REMOVAL — OUTER RING (AVIM). Refer to paragraphs 5-114 and 5-115.

5-144. REPAIR — OUTER RING.

a. Refer to paragraph 5-118 for repairs.

b. Refer to figure 5-43 for repair limits.

c. No cracks are permitted, replace outer ring.

d. Detection of any loosening of drive link stud (44, figure 5-39) is cause for condemning the outer ring assembly (43).

5-145. INSTALLATION — OUTER RING (AVIM). Refer to paragraphs 5-119 and 5-121.

5-146. SUPPORT ASSEMBLY (SWASHPLATE).

5-147. DESCRIPTION — SUPPORT ASSEMBLY (SWASHPLATE). The support assembly (8, figure 5-39) supports the swashplate assembly.

5-148. INSPECTION — SUPPORT ASSEMBLY (SWASHPLATE). Inspect support assembly for nicks, dents, cracks, wear, and corrosion. If a crack in the support assembly (swashplate) is suspected, refer to TM 1-1520-254-23, Technical Manual Aviation Unit Maintenance (AVUM) and Aviation Intermediate Maintenance (AVIM) Manual Nondestructive Inspection Procedures for OH-58 Helicopter Series.

NOTE

If windy condition prevails, secure blades with tiedown to prevent excessive main rotor flapping.

a. Raise collective control to gain access to the base of the swashplate support assembly.

WARNING

Degreasing Solvent is combustible and toxic to eyes, skin, and respiratory tract. Wear protective gloves and goggles/face shield. Avoid repeated or prolonged contact. Use only in well-ventilated areas (or use approved respirator as determined by local safety/industrial hygiene personnel). Keep away from open flames or other sources of ignition.

CAUTION

When using degreasing solvent (C62) for cleaning, use care to prevent contamination of adjacent parts.

b. Thoroughly clean swashplate support base with degreasing solvent (C62).

c. Using a 10-power magnifying glass, visually inspect the full circumference of the fillet radius where the cylindrical (slider) portion joins the support base. This area is immediately below area C in figure 5-48. Pay particular attention to the aft side of the swashplate support assembly.

d. If not crack is found, lower collective lever and return aircraft to service.

e. If a crack is suspected, confirm by performing a fluorescent penetrant inspection of the subject area.

5-149. REMOVAL — SUPPORT ASSEMBLY (SWASHPLATE). Refer to paragraph 5-114.

5-150. REPAIR — SUPPORT ASSEMBLY (SWASHPLATE).

a. Refer to figure 5-48 for repair limits.

b. No cracks are permitted, replace support assembly.

5-151. INSTALLATION — SUPPORT ASSEMBLY (SWASHPLATE). Refer to paragraph 5-121.

5-152. PITCH LINK ASSEMBLY.

5-153. DESCRIPTION — PITCH LINK ASSEMBLY. Pitch link assemblies are used to transmit changes of pitch from the swashplate assembly to each individual blade.

5-154. INSPECTION — PITCH LINK ASSEMBLY.

a. Inspect pitch linkage tubes (8, figure 5-1) for cracks, scratches, and dents, and for evidence of corrosion. If a crack in the pitch link assembly is suspected, refer to TM 1-1520-254-23, Technical Manual Aviation Unit Maintenance (AVUM) and Aviation Intermediate Maintenance (AVIM) Manual Nondestructive Inspection Procedures for OH-58 Helicopter Series.

b. Check linkage tube nut (7), washer (6), and bolt (5) and cotter pin (22) for security.

5-155. REMOVAL — PITCH LINK ASSEMBLY

WARNING

Do not allow main rotor blade to rotate on pitch change axis. If blade rotates on pitch change axis past 90 degrees the main rotor retention strap must be replaced.

a. Index pitch link assembly (8, figure 5-1) for reinstallation in same position.

b. Remove cotter pin, nuts, washers, and bolts securing clevis ends of pitch link assemblies to main rotor pitch horn trunnion and swashplate outer ring. (Figure 5-6.)

c. Secure main rotor blade pitch horns to yoke with T-handle work aid.

NOTE

The T-handle work aid is fabricated locally in accordance with figure 5-8.

d. Lockwire (C97) the T-handle to trunnion bearing to prevent back out.

5-156. INSPECTION — ACCEPTANCE/REJECTION PITCH LINK ASSEMBLY.

a. To aid in assembly and installation procedures, measure and record the distance between the center of the upper and lower bolt holes.

b. Disassemble pitch links and check pitch tubes for damage (refer to figure 5-53.) Proceed with the following:

(1) Check the tubes at the end and outside diameter surfaces of the swaged area, from the ends of the tube to **0.750** inch in, using a three-power magnifying glass. Check for cracks, pitting, and corrosion. If cracked, the tube will be rejected.

(2) Visually inspect each of pitch change tubes for mushrooming. If mushrooming is visually evident, replace tube.

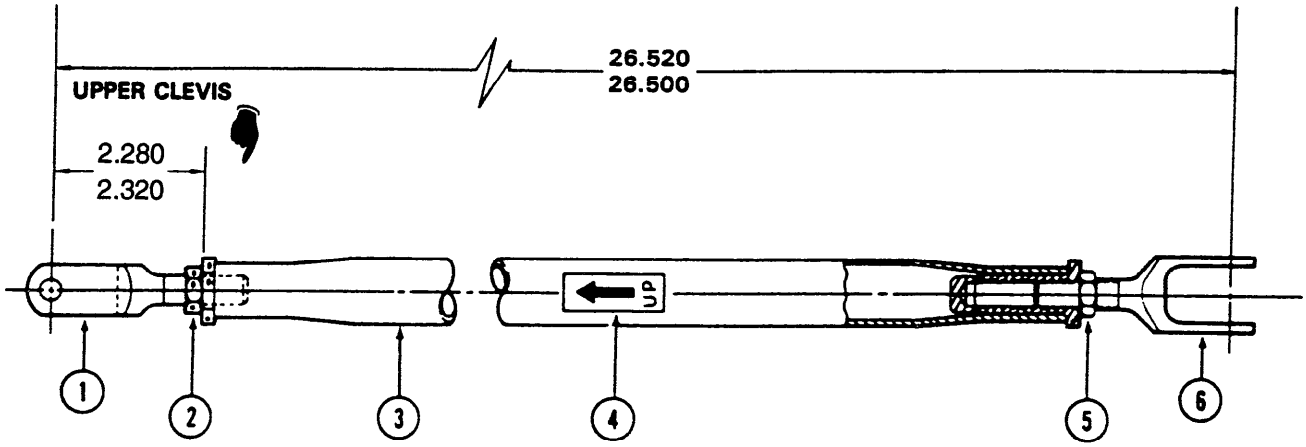

CAUTION

ENSURE THAT DECAL (4) IS POINTING UP.

NOTES:

1. Apply corrosion preventive compound (C51) to all threads at each reassembly.
2. Torque jamnut (2 and 5) 150 to 200 inch-pounds.
3. Secure jamnut (2) with 0.032 inch lockwire.
4. Use dimension that is most convenient, to determine maximum limit for each clevis.
5. All dimensions are in inches.

1. Clevis
2. Jamnut
3. Tube
4. Decal
5. Jamnut
6. Clevis

206010-188-1

Figure 5-52. Pitch Link Assembly — Preliminary Dimensions Prior to Tracking (Sheet 1 of 2)

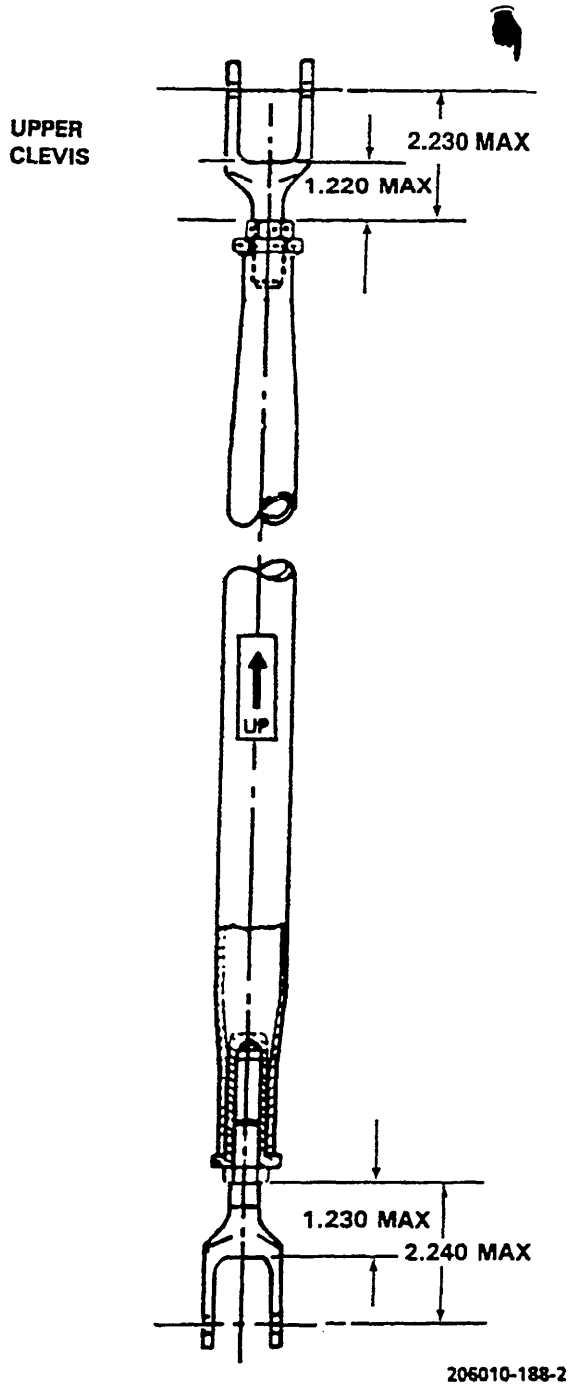

Figure 5-52. Pitch Link Assembly — Preliminary Dimensions Prior to Tracking (Sheet 2 of 2)

WARNING

Acetone is extremely flammable and toxic to eyes, skin, and respiratory tract. Wear protective gloves and goggles/face shield. Avoid repeated or prolonged contact. Use only in well-ventilated areas (or use approved respirator as determined by local safety/industrial hygiene personnel). Keep away from open flames, sparks, hot surfaces or other sources of ignition.

NOTE

Inspection should only be performed while pitch change links are disassembled and not while pitch change links are installed on aircraft.

(3) Clean the threaded shank of each clevis with acetone (C2) and inspect for cracks using a minimum 10-power magnifying glass; observe closely the valley of the threads.

(4) Visually inspect clevis ends for bonding, note for elongation, exposed portion of clevis threads for condition and proper engagement.

(5) Inspect all main rotor pitch link assemblies upper clevis (1) for wear in clevis area contacted by aligning ear of pitch horn bearing. Wear not exceeding **0.005** inch deep is permissible, provided lower clevis does not contact swashplate outer ring horns. When worn to a maximum limit, rotate the pitch link assembly **180** degrees to unworn side of the upper clevis.

c. Apply corrosion preventive compound (C51) to the threads of the clevises, ends of tube, and the mating surfaces of both locks and nuts before reassembling the pitch links.

5-157. REPAIR — PITCH LINK ASSEMBLY.

a. Remove all scratches within prescribed limitations with wet or dry type sandpaper (C125) or finer to obtain a smooth scratch free surface.

NOTE

Repair area is to have a minimum radius of 0.005 inch.

b. Apply one coat of epoxy polyamide primer (C116) to repaired area.

c. Replace pitch link tubes and clevis that exceed limits indicated in figure 5-53.

d. Replace clevis ends containing mutilated threads (rough tool marks, tearing, etc.). Replace clevis if holes are elongated more than **0.003** inch.

5-158. INSTALLATION — PITCH LINK ASSEMBLY.

a. Remove T-handle work aid.

b. Secure each pitch link assembly (8, figure 5-1) which meets inspection requirements to pitch horn trunnion assembly and two swashplate outer ring (3, figure 5-37).

c. Refer to index marks for reinstallation of pitch link assemblies (8) in the same position.

d. Torque nuts (18, figure 5-6) **100 TO 140 INCH-POUNDS** and install cotter pin (17). Perform test flight in accordance with TM 55-1500-328-25.

NOTE

Steps e. through k. must be completed only if assemblies or pitch change components are replaced.

e. The following instructions apply to pitch link assembly P/N 206-010-360-3. In this installation, the upper clevis has fine threads and the lower clevis has coarse threads.

(1) If pitch link tubes, clevis ends, nuts or complete assemblies are being replaced, apply corrosion preventive compound (C51) to the clevis threads, ends of tube, and to the top surface of nuts (2 and 5, figure 5-52).

NOTE

In performing the following preliminary clevis adjustment, measure from the center of the upper clevis bolt hole to the bottom of the nut as shown in figure 5-52.

(2) Set the upper clevis (1) between **2.280 and 2.320** inches. Set the lower clevis (6) between **26.500 and 26.520** inches.

(3) Install pitch link assemblies (8, figure 5-1) to swashplate and main rotor blade pitch horns. Either clevis may be adjusted for alignment purposes.

NOTE

Observe color dots and install pitch link as coded.

f. After adjustment, replace any corrosion preventive compound (C51) that may have been rubbed off during adjustment.

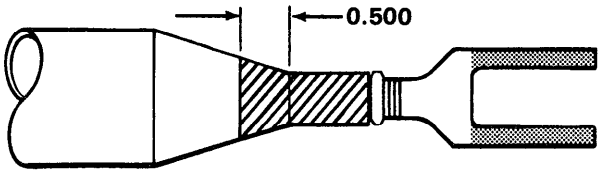

TYPICAL CONTROL LINK ASSEMBLIES AND CLEVISES

206010-189

DAMAGE LOCATION SYMBOLS

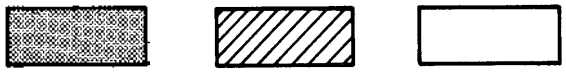

TYPE OF DAMAGE	MAXIMUM DAMAGE AND REPAIR DEPTH		
MECHANICAL	0.005 in. before and after repair	0.005 in. before and after repair	0.010 in. before and after repair
CORROSION	0.0025 in. before and 0.005 in. after repair	0.0025 in. before and 0.005 in. after repair	0.005 in. before and 0.010 in. after repair
MAXIMUM AREA PER FULL DEPTH REPAIR	0.100 sq. in.	0.250 sq. in.	1.000 sq. in.
NUMBER OF REPAIRS	One per lug	2 per zone	Not critical
EDGE CHAMFER	0.020 in.	0.020 in.	0.040 in.
BORES	0.002 in. for 1/4 circumference		
THREAD:			
Depth:	1/3 of thread		
Length:	1/4 inch		
Number:	Two per segment		

NOTE: Repair width at any section shall not exceed one-third of tube circumference.

All dimensions are in inches.

Figure 5-53. Pitch Link Assembly — Damage Limits

g. Ensure bolts, washers, and nuts are installed with bolt heads inboard on the main rotor pitch change horns and with bolt heads in direction of rotation on the swashplate. Use washers as required for proper bolt position and for correct cotter pin installation. There must be a washer under the head of the bolt and under the nut. Use two under nut if required.

h. Torque nuts (7) **100 TO 140 INCH-POUNDS** and install cotter pin (22).

i. Adjust main rotor blade minimum pitch angle to -**0.750** degree as follows:

(1) Place collective in full down position, then place cyclic in neutral position.

(2) Install rigging bolt.

(3) For pitch link assembly P/N 206-010-360-3.

(a) Adjust pitch link (1, figure 5-52) to obtain -**0.750** degree main rotor blade pitch angle measure on the grip tang.

NOTE

Do not exceed the maximum dimensions shown in figure 5-52.

(b) Align clevis (1 and 6) to center on self aligning bearings in swashplate and main rotor blade pitch horn. Torque nuts (2 and 5) **150 TO 200 INCH-POUNDS**. Lockwire (C96) nut (2), apply corrosion preventive compound (C51) to top surfaces of nuts (2 and 5). Lockwire required at only one end.

j. Repeat step i. for opposite blade and install cotter pins in four bolts attaching pitch link assemblies to swashplate and main rotor blade pitch horns. Remove rigging bolt.

k. Track main rotor blades. Refer to AVA TM 1-6625-724-13&P.

5-159. IDLER LINK AND COLLAR SET.

5-160. DESCRIPTION — IDLER LINK AND COLLAR SET. The idler link and collar set transfers mast movement to the swashplate outer ring.

5-161. INSPECTION — IDLER LINK AND COLLAR SET.

a. Visually inspect idler link, lever and collar for obvious damage and for proper installation. Check the assembly for security of attachment. If a crack in the pylon idler link or pylon swashplate collar set is suspected, refer to TM 1-1520-254-23, Technical Manual Aviation Unit Maintenance (AVUM) and Aviation Intermediate Maintenance (AVIM) Manual Nondestructive Inspection Procedures for OH-58 Helicopter Series.

b. Check bolt (1, figure 5-36) for security. It should not be possible to turn bolt (1) with fingers.

c. Without disassembly, look for metal-to-metal contact between lever (5), idler link (11), or collar set (18). Metal-to-metal contact is an indication that the teflon pad has worn through, been knocked loose, or that a bushing has been broken.

d. Maximum allowable radial play between spacer (12) and lever (5) at each of four places is **0.025** inch. Clamp dial indicator to collar set for inboard spacers, and to lever for outboard spacers.

e. Visually inspect the collar set for cracking or permanent deformation, especially the area adjacent to the slot in the rear collar. Look for heavy scoring, threading, and pitting.

f. Inspect boot (16) for cuts, tears, and deterioration.

g. If radial looseness between spacers and lever, etc., exceeds **0.008** inch, a disassembly inspection and reversal of the lever (5) is required at the periodic inspection. (Invert lever (5) such that its top becomes its bottom, but the outboard bushings remain outboard.)

NOTE

Temporarily mark the lever (5) making it possible to determine which side of the lever had been up and which bushings were outboard. Disassembly inspection is also required if there is visual indication of metal-to-metal scoring of bushing or lever surfaces.

5-162. REMOVAL — IDLER LINK ASSEMBLY AND COLLAR SET.

a. Loosen two nuts (17, figure 5-36) then remove cotter pin (15), nut (14), washer (13), and spacer (12). Remove bolt (1), spacer (3), and washer (2).

WARNING

Do not attempt to remove or install bolt (1) between lever and collar set before loosening nuts (17), nor use force for either removal or installation (slight tapping with plastic or rawhide mallet permitted.)

b. Remove cotter pin (6), nut (7), washer (8), and washer (9). Remove idler link (11) from stud on outer ring (29), then washer (10). Remove lever and link as an assembly.

c. Remove nuts (17) and attaching hardware securing collar set to mast. Remove collar set (18).

d. Remove hardware securing lever (5) to link (11).

WARNING

Acetone is extremely flammable and toxic to eyes, skin, and respiratory tract. Wear protective gloves and goggles/face shield. Avoid repeated or prolonged contact. Use only in well-ventilated areas (or use approved respirator as determined by local safety/industrial hygiene personnel). Keep away from open flames, sparks, hot surfaces or other sources of ignition.

5-163. CLEANING — IDLER LINK ASSEMBLY AND COLLAR SET. Clean the collar set, spacers, and idler link with acetone (C2). Wipe with clean dry cloth.

5-164. INSPECTION (DISASSEMBLY) — IDLER LINK ASSEMBLY AND COLLAR SET.

a. After disassembly, determine if metal-to-metal scoring has occurred.

b. If radial looseness of any spacer has exceeded **0.016** inch as measured in idler link and collar set, replacement of all four lever bushings and both idler link bushings is recommended.

5-165. REPAIR OR REPLACEMENT — IDLER LINK ASSEMBLY COLLAR SET.

a. Check self-aligning bearing in idler link (11, figure 5-36). If inner ball portion of bearing can be moved **0.020** inch or more parallel to the bolt hole axis, replace bearing. Refer to paragraph 5-118, step f.

b. For repair limits of components of the idler link assembly and collar set, refer to figures 5-40, 5-46, and 5-48.

c. Replace bushings in idler lever (5, figure 5-36) as follows:

(1) Remove bushings from lever. Refer to TM 55-1500-322-24.

(2) Install new bushings with A4 metal set (C12) maintaining a minimum dimension of **2.625** between bushing surfaces.

NOTE

Do not allow metal-set to coat bearing surfaces.

d. Replace bushings in idler link (11, figure 5-36) as follows:

(1) Remove bushings from link. Refer to TM 55-1500-322-24.

(2) Install new bushings, apply unreduced zinc chromate (C118) to faying surfaces of bushing and link. Refer to TM 55-1500-322-24.

5-166. INSTALLATION — IDLER LINK ASSEMBLY AND COLLAR SET.

CAUTION

Ensure collar set serrations are properly seated in mast serrations. Collar set must slide freely into position. Do not force.

a. Inspect two halves of collar set (18, figure 5-36) to ensure they are a matched set.

NOTE

The set numbers will be vibro-etched either on top of the collars or on the edges adjacent to the bolt holes.

b. Check the milled groove in mast (4) to ensure it crosses **five** serrations only.

c. Slide the collar set halves (one at a time) down into mast serrations; then install bolts (33), with two washers (32), under bolt heads.

NOTE

Bolt heads must be on the same side of the collar set as the lever (5).

d. Install one washer (31) under each nut (17). Do not tighten nuts at this time.

e. Ensure collar set has been properly positioned with respect to lever (5), idler link (11), and outer ring (29).

f. After verifying that bolt (1) is serviceable, i.e., not bent, cross threaded, or worn excessively, position washer (2) and spacer (3) on bolt (1). Axial scoring must not exceed **0.005** inch depth. Radial scoring must not exceed **0.003** inch depth. Bolts damaged beyond these limits must be replaced.

NOTE

In general, bolt wear patterns, resulting from minute flexures or movement without sharp edges, burrs, or abrupt changes in profile, are permitted. Localized polishing or wear of cadmium plating is permitted.

g. Look through hole in collar set to visually verify alignment and absence of metal chips, etc., then carefully insert bolt (1) through lever (5) and collar set (18).

NOTE

Ensure that bolt (1) is properly positioned in groove provided in mast (4), and bolt head is in direction of rotation.

h. Install spacer (12), washer (13), and nut (14).

i. Torque nut (14) **100 TO 140 INCH-POUNDS**, plus free running torque required for self-locking nut.

j. Torque nuts (17) **50 TO 70 INCH-POUNDS**, plus free running torque required for self-locking nut.

k. Install cotter pin (15) in bolt (1).

l. Install washer (37), and spacer (38) on bolt (36). Insert bolt (36) through lever (5) and idler link (11).

NOTE

Ensure that bolt head is in direction of rotation.

m. Install spacer (39), washer (40), and nut (41).

n. Torque nut (41) **100 TO 140 INCH-POUNDS**, plus free running torque required for self-locking nut.

o. Install cotter pin (42) in bolt (36).

CAUTION

Ensure washer (9), is installed between idler link (11) and washer (8).

p. Install washer (10) on outer ring of swashplate and attach idler link (11).

q. Install washers (9 and 8), and torque nut (7) **60 TO 85 INCH-POUNDS**.

r. Install cotter pin (6).

s. Apply sealant (C129) to cover spacer between collar halves. Encircle entire area around mast to prevent entry of foreign matter.

NOTE

Heads of all bolts are to be installed in direction of rotation except bolts through collar set (18), which are installed with bolt heads toward lever (5) to ensure proper clearance.

5-167. COLLECTIVE LEVER AND LINK ASSEMBLY.

5-168. DESCRIPTION — COLLECTIVE LEVER AND LINK ASSEMBLY. The collective lever is used in conjunction with the cyclic control to control pitch inputs to rotor blades.

5-169. INSPECTION (INSTALLED) — COLLECTIVE LEVER AND LINK ASSEMBLY.

a. Visually inspect all parts for evidence of corrosion, nicks, dents, scratches, and excessive wear.

b. Check self-aligning bearing in collective lever (19). If inner ball portion of bearing can be moved **0.020** inch or more parallel to the bolt hole axis, replace bearing.

5-170. REMOVE — COLLECTIVE LEVER AND LINK ASSEMBLY.

a. Remove screw (21, figure 5-36), washer (22), and pin (20) attaching collective lever (19) to pivot sleeve.

b. Remove bolt (23), washers (24), nut (26), and cotter pin (35) securing collective lever.

c. Remove hardware (same as step b.) securing link (25) to swashplate support. Remove link.

5-171. INSPECTION — COLLECTIVE LEVER AND LINK ASSEMBLY.

NOTE

Using a 10-power magnifying glass, inspect for cracks in collective lever and link assembly.

a. Inspect collective lever link (idler) in accordance with figure 5-45.

b. Inspect collective lever in accordance with figure 5-46.

5-172. REPAIR — COLLECTIVE LEVER AND LINK ASSEMBLY.

a. Repair of the collective lever and link is limited to removal of nicks, scratches, dents, and corrosion from surface area. Refer to figures 5-45 and 5-46 for repair limits.

b. No cracks are permitted. Replace defective assembly.

5-173. INSTALLATION — COLLECTIVE LEVER AND LINK ASSEMBLY.

NOTE

The word "TOP" is embossed on the lever assembly to indicate proper installation.

a. Prior to assembling collective lever (29, figure 5-39) and link (21), ensure bushings (3, 9, and 28) and bearings (1 and 22) are installed on pivot sleeve (2) and lever (29).

b. Install lever assembly (29) to support assembly (8) with link (21) using bushings (20), spacers (19), bolts (13 and 23), washers (10 and 24), and nuts (11 and 30).

c. Torque nuts (11 and 30) **95 TO 110 INCH-POUNDS** and install cotter pins (12 and 31).

d. Install collective lever (29) to pivot sleeve (2) using pins (27), washers (25), screws (26), and lockwire (C96) screws to lever.

SECTION V TAIL ROTOR

5-174. TAIL ROTOR.

5-175. DESCRIPTION — TAIL ROTOR. The tail rotor counteracts torque applied to the helicopter under power. The tail rotor system consists of the hub and blade assembly, a yoke assembly, trunnion, and the blade pitch change mechanisms.

NOTE

Helicopters are delivered with a balance wheel installed as part of the tail rotor to facilitate dynamic balancing of the tail rotor. A balance wheel can be used on prior helicopters by installing parts illustrated in figure 5-54, detail B.

WARNING

Aliphatic Naphtha is flammable and toxic to eyes, skin, and respiratory tract. Wear protective gloves and goggles/face shield. Avoid repeated or prolonged contact. Use only in well-ventilated areas (or use approved respirator as determined by local safety/industrial hygiene personnel). Keep away from open flames, sparks or other sources of ignition.

5-176. CLEANING — TAIL ROTOR. Spot clean the rail rotor with naphtha (C22). Wipe with dry clean cloth.

5-177. INSPECTION — TAIL ROTOR. Refer to paragraphs 5-182 and 5-204.

a. Inspect rotor blades for nicks, dents, scratches, or looseness.

b. Inspect control linkage for obvious damage and security.

5-178. TROUBLESHOOTING — TAIL ROTOR. Troubleshoot the tail rotor in accordance with table 5-2.

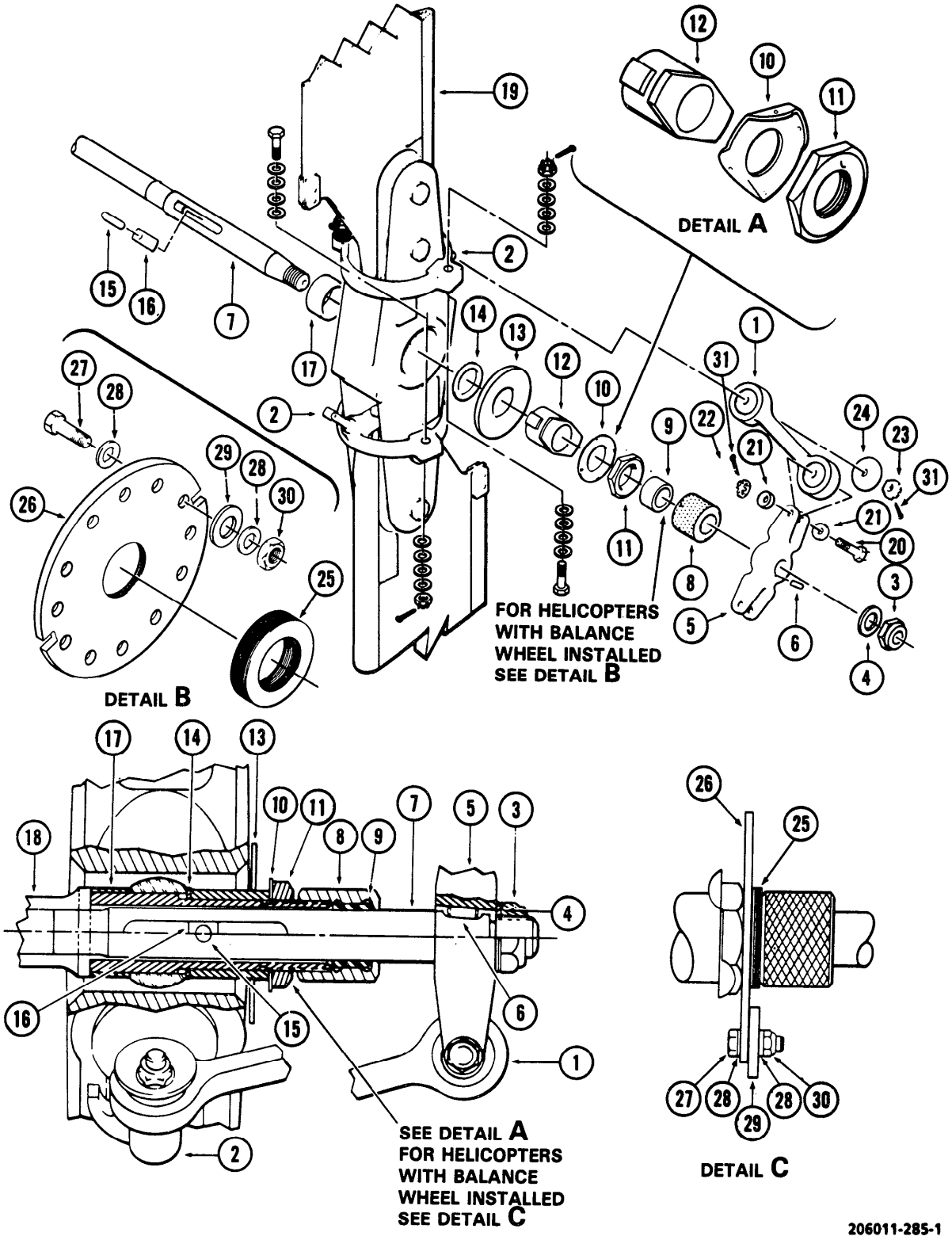

Figure 5-54. Tail Rotor Removal/Installation (Sheet 1 of 2)

1. Link
2. Pitch Horn
3. Nut
4. Washer
5. Crosshead
6. Pin
7. Control Tube
8. Knurled Nut
9. Liner
10. Washer
11. Nut
12. Static Stop
13. Bumper
14. Shim
15. Pin
16. Key
17. Spacer
18. Gearbox Shaft
19. Tail Rotor Blade
20. Bolt
21. Washer
22. Nut
23. Nut
24. Cupped Washer
25. Shims
26. Balance Wheel
27. Bolt
28. Washer
29. Washer
30. Nut
31. Cotter Pin

Figure 5-54. Tail Rotor Removal/Installation (Sheet 2 of 2)

NOTE

Before using table 5-2, ensure all normal operational checks have been performed. If a malfunction exists which is not listed in table 5-2, notify the next higher level of maintenance.

5-179. ALIGNMENT AND BALANCE — TAIL ROTOR (WITH BALANCE WHEEL).

NOTE

When balancing is completed, there can be bolts, washers, and nuts installed in both the spanwise and chordwise directions.

a. Perform spanwise balancing as follows:

(1) Observe the amount of vibration at the pedals and horizontal stabilizer at **100% to 103% A 97% to 100% C** N2 for reference.

(2) Place a two-inch strip of one-inch wide masking tape (C143) near the tip of one blade (**30** inches from center line of hub) and compare the vibration. If vibration is not reduced by the first two-inch strip of masking tape, remove the tape and perform the same procedure on the opposite blade.

(3) If vibration is reduced but not acceptable try a four-, six-, eight-, or 10-inch strip of masking tape until vibration is reduced to minimum.

(4) Install a bolt (27, figure 5-54), washers (28 and 29), and nut (30) in the balance wheel (26) hole aligned spanwise (lengthwise) with the blade.

NOTE

Length of bolt (27) is determined by number and combination of washers used. Washers (29) should be placed alternately on either side of balance wheel (26). The combination of bolt, washers, and nut is to equal the same inch/gram imbalance as that exerted by the tape on the rotor. (Refer to table 5-3.) Use a maximum of 4 bolts per balance wheel.

b. Perform chordwise balancing as follows:

(1) Observe the amount of vibration at the pedals and horizontal stabilizer at **100% to 103% A 97% to 100% C** N2 for reference.

(2) Install a bolt (27) and nut (30) in one of the balance wheel (26) holes that are aligned chordwise (fore and aft) with the rotor blades and compare the vibration. If vibration is not reduced, remove the bolt and nut and perform the same procedure using the opposite hole in the balance wheel.

NOTE

For balancing, use combinations of AN960-10 and AN970-3 washers. Maximum of three for any combination per bolt.

(3) If vibration is reduced, add washers (28 and/or 29) until vibration is reduced to minimum.

Table 5-2. Troubleshooting — Tail Rotor Assembly

CONDITION

TEST OR INSPECTION

CORRECTIVE ACTION

1. High frequency vibration felt through tail rotor control pedals.

STEP 1. Blade out of balance. Refer to paragraph 5-179.

Balance tail rotor blade. Refer to paragraphs 5-179 and 5-202.

STEP 2. Worn or loose blade bearing. Refer to paragraph 5-244.

Replace bearings and/or blades. Refer to paragraphs 5-245 and 5-246.

STEP 3. Bent pitch change link. Refer to paragraph 5-177.

Replace pitch change link. Refer to paragraphs 5-183 and 5-188, step 5-188k.

STEP 4. Loose retaining nut. Refer to paragraph 5-188.

Retorque retaining nut 45 TO 50 FOOT-POUNDS. Refer to paragraphs 5-183 and 5-188.

STEP 5. Loose pitch change link bearing. Refer to paragraphs 5-183 and 5-188.

Replace pitch change link. Refer to paragraphs 5-183 and 5-188.

STEP 6. Worn pitch change tube. Refer to paragraphs 5-183 and 5-188.

Replace defective part. Refer to paragraphs 5-183 and 5-188.

STEP 7. Worn tail rotor flapping bumper. Refer to paragraph 5-183 and 5-188.

Replace worn bumper. Refer to paragraphs 5-183 and 5-188.

2. Inability to make normal right and left turns in flight.

STEP 1. Improper tail rotor rigging. Refer to paragraph 11-105.

Refer to paragraph 11-94 for rigging procedures and paragraph 5-179 for alignment.

Table 5-3. Balance Weight Conversion

ITEM NO.	NOMENCLATURE	WEIGHT	ARM	UNBALANCE
1.	Masking Tape, one inch wide.			
	a. Two inch length	0.18 gm	30 inch	5.4 in/gm
	b. Four inch length	0.36 gm	30 inch	10.8 in/gm
	c. Six inch length	0.54 gm	30 inch	16.2 in/gm
2.	AN3-3A bolt	2.9 gm	1.25 inch	3.7 in/gm
3.	AN3-4A bolt	3.41 gm	1.25 inch	4.4 in/gm
4.	AN3-5A bolt	3.86 gm	1.25 inch	4.4 in/gm
5.	NAS679A3 nut	1.27 gm	1.25 inch	1.6 in/gm
6.	AN960-10 washer	0.9 gm	1.25 inch	1.1 in/gm
7.	AN970-3 washer	5.0 gm	1.25 inch	6.2 in/gm
8.	MS21042L3 nut	0.81 gm	1.25 inch	1.0 in/gm

5-180. TAIL ROTOR HUB AND BLADE ASSEMBLY. (PRIOR TO COMPLIANCE WITH MWO 55-1520-228-50-25.)

WARNING

Parts of the improved tail rotor (after MWO 55-1520-228-50-25) although similar cannot be used on the standard tail rotor (before MWO 55-1520-228-50-25.) The following parts must always be used together to assure safe operation: hub, and blade assembly P/N 206-011-801 series (used before MWO 55-1520-228-50-25).

Yoke Assembly	P/N 206-011-802-1 or -105
Trunnion	P/N 206-011-803-5
Blade Assembly	P/N 206-010-750-5 or -109

CAUTION

TB 55-1520-228-20-29 required all yoke assemblies, P/N 206-011-802-1, to be modified prior to issue. Thus only P/N 206-011-802-105 should be received from supply. If a yoke (-1 series) or a tail rotor assembly which includes a yoke (-1 series) is received from supply, return it, citing the TB.

NOTE

Refer to paragraph 5-227 if MWO 55-1520-228-50-25 has been complied with.

5-181. DESCRIPTION — TAIL ROTOR HUB AND BLADE ASSEMBLY. The tail rotor hub and blade assembly consists of an aluminum alloy forged yoke and

aluminum alloy blades. The blades are mounted in the yoke by means of spherical bearings which are mounted in the grip plates on the pitch change axis. The spherical bearings provide for pitch change of the blades. The yoke and blade assembly is mounted on the **90** degree gearbox shaft by a splined trunnion, mounted in bearings within the yoke, to provide a flapping axis for the assembly. At time of assembly, spanwise balance is accomplished by use of washers on the blade retention bolts, and chordwise balance is attained by adjustment of nuts to shift the position of the trunnion in the yoke.

5-182. INSPECTION — TAIL ROTOR HUB AND BLADE ASSEMBLY.

a. Inspect rotor blades for nicks, dents, scratches, cracks, and bearing looseness. Refer to paragraphs 5-242 and 5-244.

b. Inspect tail rotor hub. Refer to paragraph 5-195.

c. Inspect tail rotor pitch change mechanism. Refer to paragraph 5-207.

d. Inspect tail rotor pitch horn. Refer to paragraph 5-224.

e. Inspect tail rotor hub and blade assembly for security of attachment.

f. Check for correct tail rotor tailboom clearance. Refer to paragraph 5-189, step j.

Pre-maintenance Requirements for Tail Rotor Hub and Blade Assembly

Condition	Requirements
Model	OH-58A and OH-58C
Part No. or Serial No.	All
Special Tools	(T44) (T46)
Test Equipment	Protractor Eddy Current Inspection Unit Magnetic Particle Method
Support Equipment	None
Minimum Personnel Required	Two Men
Consumable Materials	(C22) (C38) (C96) (C97) (C2) (C116) (C118) (C143)
Special Environmental Conditions	None
References	TM 1-1520-254-23

5-183. REMOVAL — TAIL ROTOR HUB AND BLADE ASSEMBLY.

a. Disconnect pitch change links (1, figure 5-54) as follows:

(1) Disconnect pitch change links at crosshead by removing nut (22), bolt (20), and washer (21).

(2) Disconnect pitch change links at pitch horn by removing nut (23) and cupped washer (24).

NOTE

A battery terminal puller (T44) may be used to remove crosshead from control tube.

b. Remove nut (3) and washer (4) from end pitch control tube (7). Remove crosshead (5) from control tube and lift pin (6).

c. Cut lockwire and remove knurled nut (8) and liner (9).

d. Remove shims (25) and balance wheel (26) if installed.

e. Straighten washer (10) where it is bent over nut (11) and remove nut.

f. Remove washer (10), static stop (12), bumper (13), and shim (14).

g. Slide tail rotor assembly off gearbox shaft (18) and remove pin (15) and spacer (17).

NOTE

Shim (14) serves to position static stop (12) and ensure blade-to-tailboom clearance. If the hub and blade assembly is to be reinstalled, identify the shim for reuse in the assembly.

5-184. INSPECTION — TAIL ROTOR INSTALLATION COMPONENTS.

a. Inspect spacer (17, figure 5-54), static stop (12), and knurled nut (8) for damage. Replace components exceeding allowable limits shown in figures 5-55, 5-56, and 5-57.

b. Inspect teflon liner (9, figure 5-54) for excessive wear. Maximum I.D. is **0.642** inches. Liner will be replaced if measurement exceeds **0.642** when measured with knurled nut removed from control tube.

c. Inspect balance wheel (26), nut (11), and nut (3) for obvious damage to include thread damage, corrosion, and cracking. Threads must not be stripped, crossthreaded, or otherwise mutilated. No cracking permitted.

d. Inspect shims (25), shims (14), bumper (13), and washer (10) for obvious damage. Washer (10) will normally be replaced.

NOTE

Nut (3) will normally be replaced, but may be reused if it meets the minimum drag torque for used self-locking nuts as specified in table 1-1.

5-185. REPAIR — TAIL ROTOR INSTALLATION COMPONENTS. Repair is limited to blending out mechanical and corrosion damage with abrasive cloth (C45).

5-186. DISASSEMBLY — TAIL ROTOR HUB AND BLADE ASSEMBLY.

a. Remove blade assemblies in accordance with paragraph 5-243.

b. Disassemble tail rotor hub in accordance with paragraph 5-197.

NOTE

For repair of tail rotor hub and blade assembly components, refer to the applicable component repair, Sections V and VI.

5-187. ASSEMBLY — TAIL ROTOR HUB AND BLADE ASSEMBLY.

a. Assemble tail rotor hub in accordance with paragraph 5-201.

b. Install tail rotor blades in accordance with paragraph 5-246, then balance in accordance with paragraph 5-202.

NOTE

In service the only requirement is that there be no metal-to-metal contact between the knurled nut (8) and control tube (7).

5-188. INSTALLATION — TAIL ROTOR HUB AND BLADE ASSEMBLY (WITH DYNAMIC BALANCE WHEEL).

WARNING

Ensure that pin (15, figure 5-54) goes through hole in key (16) and remains in position until tail rotor assembly and static stop are positioned on driveshaft. If for any reason pin (15) should become lodged inside the pitch control tube, or pin location cannot be determined, the pitch control tube must be removed from the helicopter. If pin cannot be dislodged, control tube must be X-rayed to determine if pin is present.

a. Install spacer (17) against shoulder on tail rotor driveshaft. Align pin hole in driveshaft, slot control tube (7), and hole in key (16). Install pin (15).

b. Align splines and position tail rotor assembly on **90** degree gearbox shaft with leading edge of top blade (19) facing aft. Install shim (14), rubber bumper (13), static stop (12), washer (10), and nut (11). Torque nut to **45 TO 50 FOOT-POUNDS**.

c. Check tail rotor assembly for freedom of movement on flapping axis. Check each rotor blade for freedom of movement on pitch change spherical bearings.

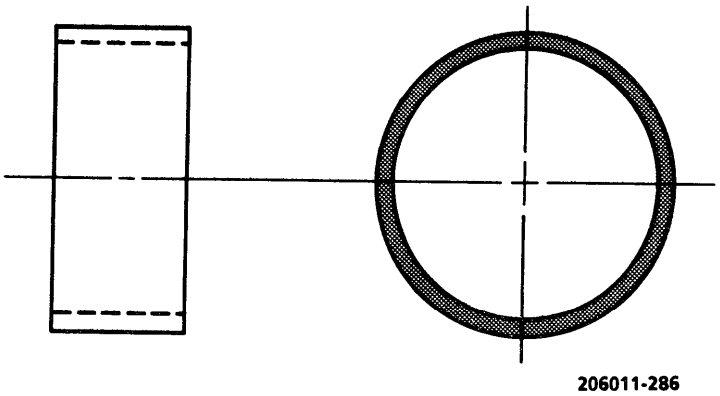

DAMAGE LOCATION SYMBOLS

TYPE OF DAMAGE	MAXIMUM DAMAGE AND REPAIR DEPTH	
MECHANICAL AND CORROSION	0.010 in.	0.010 in.
MAXIMUM ARE PER FULL DEPTH REPAIR	0.200 in.	1/4 circumference
NUMBER OF REPAIRS	Three	Not critical
EDGE CHAMFER	0.015 in.	0.015 in.
BORES	- - - - - - - - - - -	- - - - - - - - - - -

Figure 5-55. Tail Rotor Spacer — Damage Limits

d. Check for correct rotor flapping angle as follows:

(1) Place tail rotor blades in vertical position, move rubber bumper (13) outboard over static stop, and check flapping angle along with pitch change axis. The pitch change axis is an extension of a line through the centers of the blade-to-yoke attachment bolts. Flap tail rotor to one extreme position until yoke contacts static stop (12). Place a protractor on blade-to-yoke attachment bolts and record angle. Flap tail rotor to opposite extreme position until yoke contacts static stop; measure and record angle. The total flapping angle must be **12 (±1)** degrees.

(2) If flapping angle is less than **11** degrees, increase thickness of shims (14). If flapping angle is more than **13** degrees, reduce thickness of shims (14). Should flapping angle be more than **13** degrees with all shims removed, remove static stop and surface or machine the inboard end removing no more than **0.020** inch of material. Reduce static stop and check flapping angle. Adjust and install shims (14) if necessary.

NOTE

Use only bonded laminates of shim (14). If a thicker shim is required, use a new shim. Laminates are 0.002 inch thick.

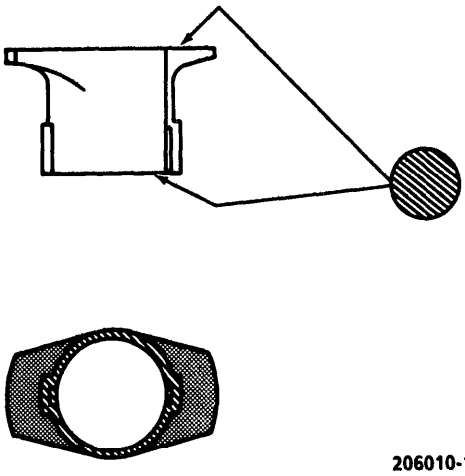

DAMAGE LOCATION SYMBOLS

TYPE OF DAMAGE	MAXIMUM DAMAGE AND REPAIR DEPTH		
MECHANICAL AND CORROSION	0.005 in.	0.010 in.	0.010 in.
MAXIMUM AREA PER FULL DEPTH REPAIR	Not critical	Not critical	1/4 circumference
NUMBER OF REPAIRS	Not critical	Not critical	Not critical
EDGE CHAMFER	0.020 in. x 45°	0.020 in.	
BORES	0.005 inch for 1/4 circumference		

Figure 5-56. Tail Rotor — Static Stop — Damage Limits

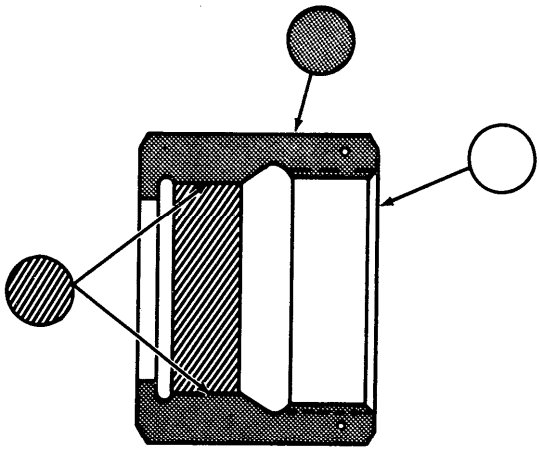

206010-191

DAMAGE LOCATION SYMBOLS

TYPE OF DAMAGE	MAXIMUM DAMAGE AND REPAIR DEPTH	
MECHANICAL AND CORROSION	0.020 in.	0.020 in below depth of knurl
MAXIMUM AREA PER FULL DEPTH REPAIR	Not critical	Not critical
NUMBER OF REPAIRS	Not critical	Not critical
EDGE CHAMFER	0.030 in.	0.030 in
BORES	0.010 inch for 1/4 circumference	
THREADS:		
DEPTH:	1/3 of thread	
LENGTH:	1/4 inch	
NUMBER:	Two	

Figure 5-57. Tail Rotor Knurled Nut — Damage Limits

e. Install balance wheel (26) against nut (11) and torque to approximately **50 INCH-POUNDS**.

CAUTION

Use only knurled nut, P/N 206-010-759-3 (0.875 inch overall length), on helicopters with the balance wheel.

CAUTION

Too much torque will strip the threads in balance wheel (26).

f. Install liner (9) and knurled nut (8). Hand-tighten nut and measure gap between nut and wheel.

g. Remove knurled nut (8) and install shims (25) to fill gap measured in step f.

NOTE

Shims (25) are laminated shims. Total thickness of each shim is 0.032 inch with each segment being 0.002 inch.

h. Install knurled nut (8) and hand-tighten.

i. Check pitch change mechanism for freedom of movement through operating range.

j. Install pin (6) in pitch control tube and install crosshead (5) over control tube pin. Check for proper location of pin by inserting a piece of lockwire into groove at back of crosshead. Secure crosshead with washer (4) and nut (3). Torque for nut (3) will be drag torque plus **100 TO 150 INCH-POUNDS**.

k. Use washers as required under nut (22) to obtain cotter pin engagement or prevent nut bottoming out on threads. Be sure to use one washer under the head of bolt (20). If more than 3 of the thick washers are required to obtain this fit, the next size shorter bolt should be used. Use the same bolt and washers combination on each crosshead to pitch link attachment.

l. Install pitch change links (1) between blade pitch horns (2) and crosshead (5). Secure links to pitch horn with washers (24), nuts (23), and cotter pins (31). Install cupped washers (24), nuts (23), and cotter pins (31). Install cupped washers (24) between nut and pitch link at blade pitch horn. Torque nut (23) **30 TO 40 INCH-POUNDS**. Install bolt (20) in crosshead end with bolt head in direction of tail rotor rotation and secure with washers (21), nuts (22), and cotter pins (31). Torque nuts (22) **60 TO 80 INCH-POUNDS**. Check links for freedom of movement on bearings.

m. Check rigging of tail rotor control system. Refer to paragraph 11-100.

n. Check for correct tail rotor to tailboom clearance as follows:

(1) Turn tail rotor to position on blade tip adjacent to tailboom. Hold right antitorque pedal forward against stop. Flap tail rotor blade toward tailboom and against static stop (12). The trailing edge of tail rotor blade must clear tailboom at closest point with at least **1.500** inches.

(2) If clearance is not within tolerance, readjustment of thickness of shim (14) may be required to provide the minimum allowable flapping angle.

o. Reposition rubber bumper (13) between static stop and yoke.

p. Bend edge of washers (10) inboard over one flat of static stop. Bend edge of washers (10) at another location, outboard over two flats of nut (11). Refer to figure 5-54, detail A.

q. Lockwire (C96) balance wheel (26) to bent washer (10) and knurled nut (8).

NOTE

The tail rotor hub and blade assembly must be statically balanced prior to installation on the helicopter. The balance wheel (26) is installed to permit dynamic balancing of the assembly on the helicopter when a high frequency vibration is found to exist and it is known that the hub and blade assembly is serviceable and is statically balanced. Refer to paragraph 5-179.

5-189. INSTALLATION — TAIL ROTOR HUB AND BLADE ASSEMBLY (WITHOUT DYNAMIC BALANCE WHEEL).

WARNING

Ensure that pin (15, figure 5-54) goes through hole in key (16) and remains in position until tail rotor assembly and static stop are positioned on driveshaft. If for any reason pin (15) should become lodged inside the pitch control tube, or pin location cannot be determined, the pitch control tube must be removed from the helicopter. If pin cannot be dislodged, control tube must be X-rayed to determine if pin is present.

a. Install spacer (17) against shoulder on tail rotor driveshaft. Align pin hole in driveshaft, slot in control tube (7), and hole in key (16). Install pin (15).

NOTE

Do not bend washer (10) or install lockwire or cotter pins until step j.

b. Align splines and position tail rotor assembly on **90** degree gearbox shaft with leading edge of top blade (19) facing aft. Install shim (14), rubber bumper (13), static stop (12), washer (10), and nut (11). Torque nut to **45 TO 50 FOOT-POUNDS**.

c. Check tail rotor assembly for freedom of movement on flapping axis. Check each rotor blade for freedom of movement on pitch change spherical bearings.

d. Check for correct rotor flapping angle as follows:

(1) Check flapping angle along the pitch change axis. The pitch change axis is an extension of a line through the centers of the blade-to-yoke attachment bolts. Place tail rotor blades in vertical position, move rubber bumper (13) outboard over static stop (12). Flap tail rotor to one extreme position until yoke contacts static stop. Place a protractor on blade-to-yoke attachment bolts and zero protractor. Flap tail rotor to opposite extreme position until yoke contacts static stop; measure and record angle. the total flapping angle must be **12 (±1)** degrees.

(2) If flapping angle is less than **11** degrees, increase thickness of shims (14). If flapping angle is more than **13** degrees, reduce thickness of shims (14). Should flapping angle be more than **13** degrees with all shim removed, remove static stop and surface or machine the inboard end removing no more than **0.020** inch of the material. Reinstall static stop and check flapping angle. Adjust and install shims (14) if necessary.

NOTE

e. Install liner (9) and knurled nut (8). Tighten nut hand-tight.

f. Check pitch change mechanism for freedom of movement through operating range.

g. Install pin (6) in pitch control tube and install crosshead (5) over control tube and pin. Check for proper location of pin by inserting a piece of lockwire into groove at back of crosshead. Secure crosshead with washer (4) and nut (3). Torque for nut (3) will be drag torque plus **100 TO 150 INCH-POUNDS**.

NOTE

Use washers as required under nut (22) to obtain cotter pin engagement or prevent nut bottoming out on threads. Use same washer combination on each crosshead to pitch change link attachment.

h. Install pitch change links (1) between blade pitch horns (2) and crosshead (5). Secure links to pitch horn with washers (24), nuts (23), and cotter pins (31). Install cupped washers (24) between nut and pitch link at blade pitch horn. Torque nut (23) **30 TO 40 INCH-POUNDS**. Install bolts (20) in crosshead end with bolt head in direction of tail rotor rotation and secure with washers (21), nuts (22), and cotter pins (31). Torque nuts (22) **60 TO 80 INCH-POUNDS**. Check links for freedom of movement on bearings.

NOTE

A rubber or teflon bumper washer may be used between the tail rotor pitch change links and the tail rotor crosshead.

i. Check rigging of tail rotor control system. Refer to paragraph 11-100.

j. Check for correct tail rotor to tailboom clearance as follows:

(1) Turn tail rotor to position one blade tip adjacent to tailboom. Hold right antitorque pedal forward against stop. Flap tail rotor blade toward tailboom and against static stop (12). The trailing edge of tail rotor blade must clear tailboom at closest point at least **1.500** inches.

(2) If clearance is not within tolerance, adjustment of thickness of shim (14) may be required to provide the minimum allowable flapping angle.

k. Reposition rubber bumper (13) between static stop and yoke.

l. Bend edge of washer (10) inboard over one flat of static stop. Bend edge of washer (10) at another location outboard over two flats of nut (11). Refer to figure 5-54, detail A.

m. Lockwire (C96) knurled nut (8), and washer (10).

SECTION VI TAIL ROTOR HUB AND CONTROLS

5-190. TAIL ROTOR HUB AND CONTROLS.

5-191. DESCRIPTION — TAIL ROTOR HUB AND CONTROLS. The tail rotor hub and control assembly provide for attachment and control pitch movements of the tail rotor blades. The tail rotor hub and control consists of four major components as follows:

a. Tail rotor hub.

b. Tail rotor pitch change mechanism.

c. Tail rotor hub trunnion.

d. Tail rotor pitch horn.

NOTE

For maintenance of the tail rotor hub and control assemblies, refer to applicable instructions contained in this section for each component.

5-192. TAIL ROTOR HUB.

5-193. DESCRIPTION — TAIL ROTOR HUB. The tail rotor hub (figure 5-58), consists of an aluminum alloy forged yoke mounted on the **90** degree tail rotor gearbox output shaft by a splined trunnion mounted in bearings of the yoke.

WARNING

Aliphatic Naphtha is flammable and toxic to eyes, skin, and respiratory tract. Wear protective gloves and goggles/face shield. Avoid repeated or prolonged contact. Use only in well-ventilated areas (or use approved respirator as determined by local safety/industrial hygiene personnel). Keep away from open flames, sparks or other sources of ignition.

5-194. CLEANING — TAIL ROTOR HUB. Spot clean the tail rotor hub with naphtha (C22). Wipe with clean dry cloth.

5-195. INSPECTION — TAIL ROTOR HUB.

a. Inspect hub for scratches, nicks, dents, burrs, cracks, corrosion, and similar surface defects. Scratches and nicks requiring no more than **0.005** inch removal of material in cleanup are permissible. Blend edges of repaired area into surrounding surface to form a smooth contour. Touch up paint as required.

b. Visually inspect pitch change links (1, figure 5-54) and crosshead (5). Look for contact between pitch change links and yoke assembly. No manipulation of the tail rotor is authorized. Check bearings for elongated holes, staking, and security; maximum radial play of **0.010** inch, maximum axial play of **0.020** inch. Refer to figure 5-59 for pitch link and crosshead limits.

NOTE

Pitch change links must be rotated to unworn side, or end to end, whenever pitch change links are worn to maximum limits as a result of crosshead contact.

c. Inspect washer (10) for cracks and general condition for reuse. If in doubt on locking capability, replace.

d. Inspect pitch horn attachment bolt to determine that lockwire does not rub on yoke assembly.

e. Inspect visible portion of trunnion for nicks, scratches, and corrosion.

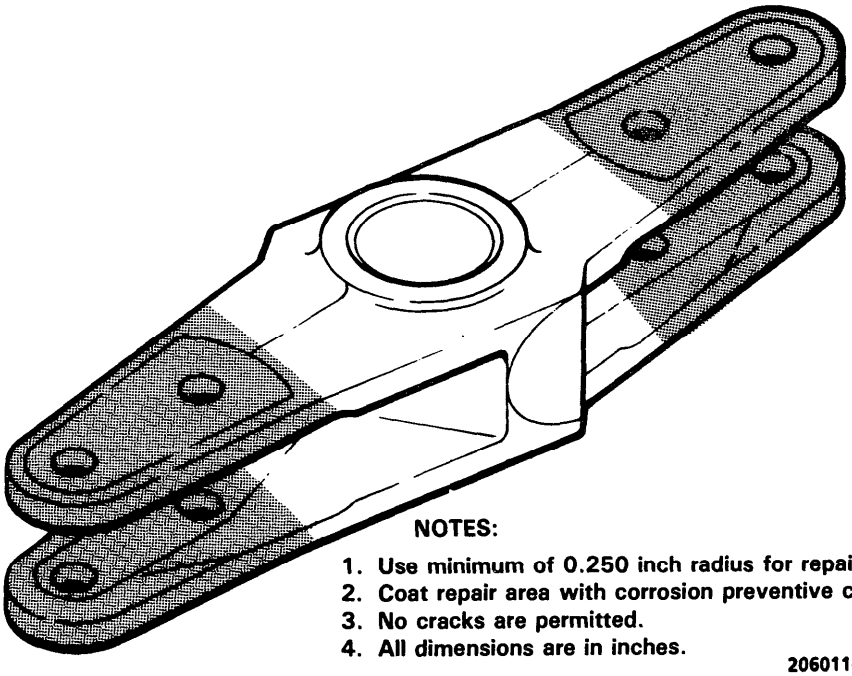

NOTES:

1. **Use minimum of 0.250 inch radius for repairs.**
2. **Coat repair area with corrosion preventive compound (C38).**
3. **No cracks are permitted.**
4. **All dimensions are in inches.**

206011-287

TYPE OF DAMAGE	DAMAGE LOCATION SYMBOLS	
	MAXIMUM DAMAGE AND REPAIR DEPTH	
MECHANICAL DAMAGE	0.010 in. before and after repair	0.030 in. before and after repair
CORROSION DAMAGE	0.005 in. before repair	0.015 in. before repair
	0.010 in. after repair	0.030 in. after repair
MAXIMUM AREA PER FULL DEPTH REPAIR	0.250 sq. in.	0.500 sq. in.
NUMBER OF REPAIRS	One per tang	Three
EDGE CHAMFER TO REMOVE DAMAGE	0.030	0.060
TRUNNION BORE DAMAGE	0.002 inch for 1/4 circumference	

Figure 5-58. Inspection and Repair Limits — Tail Rotor Hub Yoke

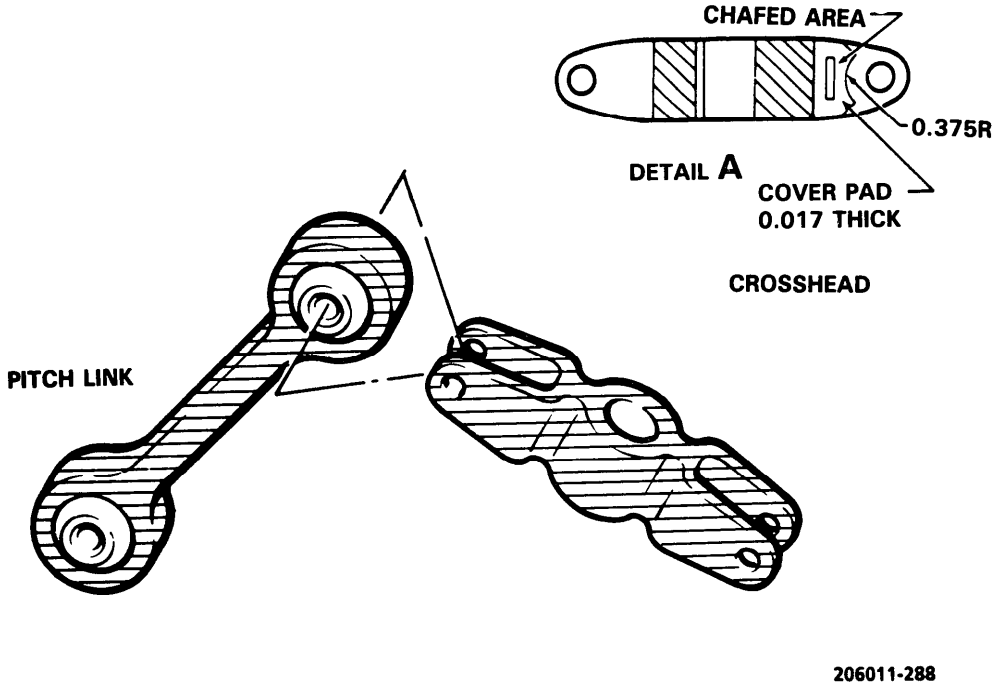

TYPE OF DAMAGE	AREA A MAXIMUM DEPTH
NICKS, SCRATCHES, SHARP DENTS	0.010
CORROSION	0.005

NOTES

1. The pitch link may have one repair per end and one on the center section. Minimum radius of repair is 0.500 inch. Repaired areas must be coated with corrosion preventive compound (C38).

2. The crosshead may have two repair areas. Repairs must not be on the same lug. Minimum radius of repair is 0.500 inch. Repaired area must be coated with primer, epoxy polyamide (C116) and top coated with acrylic lacquer (C91).

3. After repair to the crosshead caused by chafing from the link, fabricate a pad from insulating sheet (C86) to cover repaired area (see detail A). Bond pad with sealing compound (C131). Apply sufficient pressure to assure complete adherence of pad to crosshead. Care must be taken to assure that there will be no interference between pad and pitch link bearing.

4. No cracks are permitted.

5. All dimensions are in inches.

Figure 5-59. Inspection Limits Chart — Pitch Link and Crosshead

f. Inspect visible portion of hub assembly, trunnion, and bearing liners for oil and dirt accumulation, then accomplish the following:

(1) If oil is flowing or dripping from the output shaft area check oil level and condition of filler cap vent.

(2) Clean accumulated oil from visible portions of the hub assembly in accordance with paragraph 5-194, and continue to operate.

g. Axial and radial play at the trunnion and thrust bushing found during routine daily inspection is of no concern unless tail rotor vibrations are encountered. Some sliding movement of the thrust bushing in the assembly, slight rotational play between the thrust bushing and trunnion splines, and looseness or rotation of the washer are the result of normal wear and not items of inspection or measurement. There is no requirement to measure axial or radial play in the assembly.

NOTE

Inspection for bearing wear is not required except at the specified phased maintenance interval or when troubleshooting; however, loss of preload is not necessarily the cause of vibrations. There is no requirement to adjust tail rotor trunnion preload except at the specified phased maintenance interval.

Wear of the tail rotor trunnion, bearings, and thrust washers is subject to local environment. If excessive unscheduled maintenance from tail rotor vibration is experienced, the frequency of scheduled inspections should be increased.

5-196. REMOVAL — TAIL ROTOR HUB. Remove hub and blade assembly from helicopter in accordance with paragraph 5-183.

5-197. DISASSEMBLY — TAIL ROTOR HUB.

a. Remove cotter pin (10, figure 5-60), nut (11), and washers (12).

b. Remove bushing (13) and bearing liner (14).

c. Remove trunnion (9) from yoke (8) and perform same steps for disassembly of opposite end of trunnion.

d. Remove washer (15) and bearing (16) from bearing liner (14), using heat lamp to expand liner.

CAUTION

When using bearing puller attachments, care should be taken to prevent damage to the trunnion assembly.

e. Remove bearing races (26), place sleeve over stud to shield threads. Install puller attachment (T46) under race and use a standard bench press to remove races. Refer to figure 5-5.

5-198. INSPECTION — TAIL ROTOR HUB.

a. Visually inspect all parts for damage or abnormal appearance. If a crack in the yoke, trunnion, or housing is suspected, refer to TM 1-1520-254-23, Technical Manual Aviation Unit Maintenance (AVUM) and Aviation Intermediate Maintenance (AVIM) Manual Nondestructive Inspection Procedures for OH-58 Helicopter Series.

NOTE

Check trunnion serial number for local history.

b. Dimensionally check for indications of permanent deformation or damage to yoke, trunnion, and trunnion bearing housing, as follows:

(1) Insert a new bolt (1, figure 5-60) completely through yoke bushings to determine if yoke is deformed. Bolt shall be free fitting. Replace entire hub assembly, if yoke fails inspection.

(2) Inspect trunnion with a straight edge placed along centerline of trunnion, parallel to bearing journals; check for displacement between journals. A bearing surface should not be displaced from the other in excess of **0.001** inch.

(3) Inspect bearing liner O.D. The O.D. of the cylindrical portion must be round within **0.001** inch.

c. Inspect yoke (8) for the following:

(1) Corrosion and mechanical damage. Refer to figure 5-58 for limits.

(2) Inspect trunnion bore for fretting and corrosion. Maximum diameter of trunnion bore after cleanup shall not exceed **1.564** inch. An elliptical bore, resulting from damage as described in figure 5-58 is permissible provided maximum diameter (apogee) of ellipse does not exceed the above dimension.

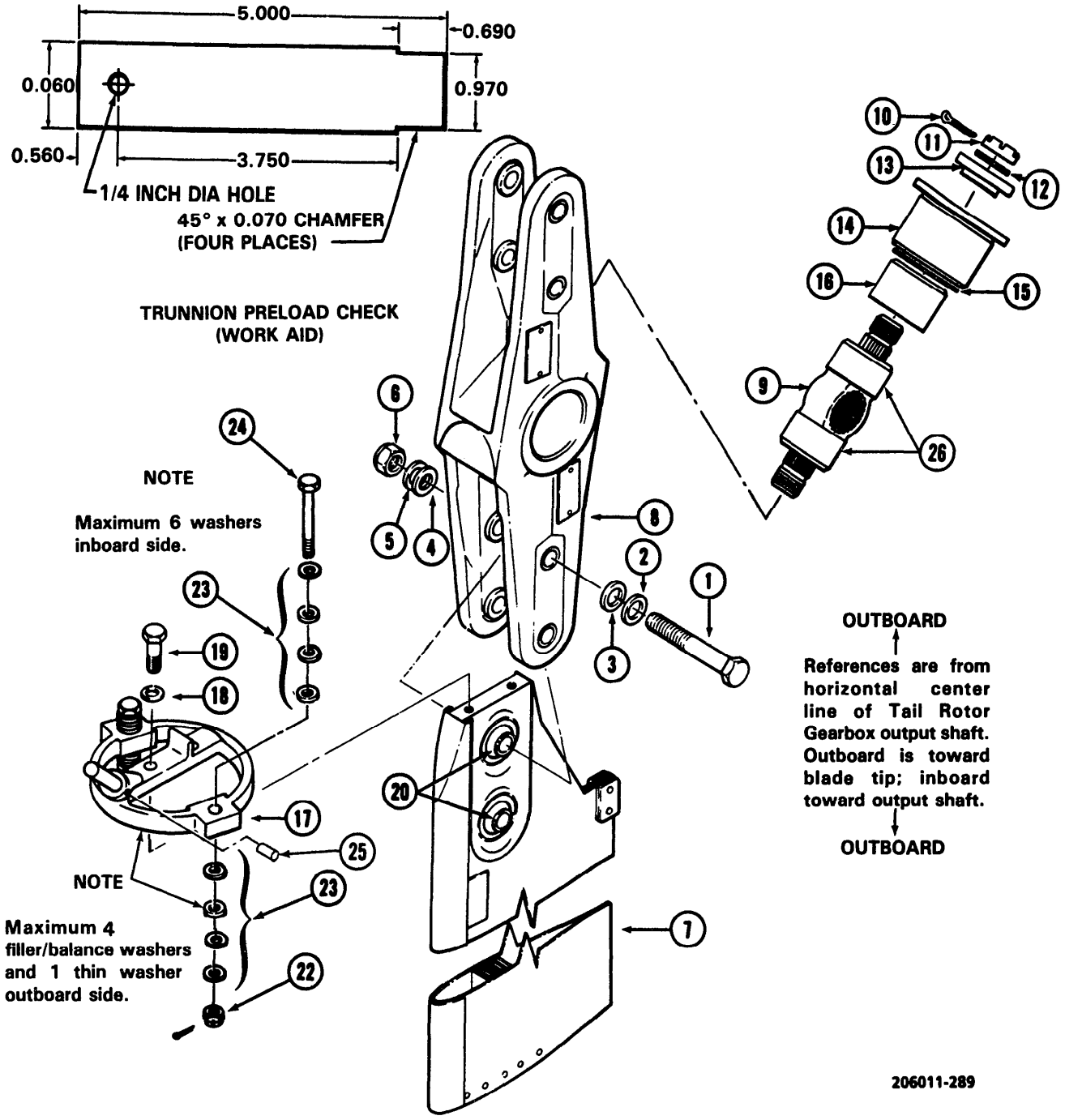

1.	Bolt	8.	Yoke	15.	Washer	22.	Nut
2.	Washer	9.	Trunnion Assembly	16.	Bearing	23.	Washer
3.	Washer	10.	Cotter Pin	17.	Pitch Horn	24.	Bolt
4.	Washer	11.	Nut	18.	Washer	25.	Pin (Straight)
5.	Washer	12.	Washer	19.	Bolt	26.	Bearing Race
6.	Nut	13.	Thrust Bushing Assembly	20.	Bearing (Ref)		
7.	Blade Assembly	14.	Bearing Liner	21.	Cotter Pin		

Figure 5-60. Disassembly — Tail Rotor Hub and Blade Assembly

(3) Dimensionally inspect yoke bushing I.D. (eight locations). If I.D. exceeds **0.376** inch, or if fretting or corrosion is present, replace bushings in pairs. Refer to paragraph is 5-200.

NOTE

If the bearing and liner are serviceable, they may be rotated 180 degrees to the unworn side of the teflon bearing and reinstalled during assembly of the hub. Use a vibro-etch to make a mark on the edge of the bearing housing ears. If the teflon bearing had previously been rotated, as evidenced by a vibro-etch marking, replace bearing and liner. Do not interchange bearing location.

d. Inspect teflon liner on thrust bushing assembly (13). Replace bushing if liner is worn through or if severe fretting has occurred.

WARNING

Acetone is extremely flammable and toxic to eyes, skin, and respiratory tract. Wear protective gloves and goggles/face shield. Avoid repeated or prolonged contact. Use only in well-ventilated areas (or use approved respirator as determined by local safety/industrial hygiene personnel). Keep away from open flames, sparks, hot surfaces or other sources of ignition.

e. Clean liner (14) with acetone (C2) and inspect teflon bearing liner inside housing for wear-through or severe fretting. Wear usually occurs on one side of teflon liner on the tang end of housing only. Refer to figure 5-61.

f. Inspect outer surface of liner (14, figure 5-60) for mechanical or corrosion damage. Material removal on tangs shall not exceed **0.010** inch and material removal for cleanup on the cylindrical portions shall not exceed **0.015** inch.

g. Inspect trunnion (9) for mechanical and corrosion damage. Replace after **2400** hours.

(1) Inspect anodized surface for damage (figure 5-62). Reject trunnion if inspection reveals any of the following:

(a) Previous repair on anodized surface.

(b) Depth of repair after cleanup exceeds **0.003** inch.

(c) Repair area exceeds **0.010** square inch.

(2) Nicks and dents on stud threads are reparable, provided neither damage nor repair exceeds one-third of thread depth and all repairs do not total more than one-half of a full thread.

(3) Inspect trunnion splines; splines may be repaired provided not more than one-third of spline depth or one-half of spline length is exceeded by repair. Reject trunnion if more than three splines are damaged.

(4) Check trunnion stud for security. (If a stud can be moved in the trunnion housing more than **4** degrees with **25 INCH-POUNDS** of torque (using two nuts back-to-back) repair trunnion.) Refer to paragraph 5-219.

h. Inspect the following parts by fluorescent-penetrant inspection in accordance with TM 55-1500-335-23.

ITEM NO.	NOMENCLATURE
(8, figure 5-60)	Yoke
(4, figure 5-60)	Liner
(9, figure 5-60)	Trunnion
(17, figure 5-60)	Pitch Horn

5-199. CLEANING — TAIL ROTOR HUB.

WARNING

Acetone is extremely flammable and toxic to eyes, skin, and respiratory tract. Wear protective gloves and goggles/face shield. Avoid repeated or prolonged contact. Use only in well-ventilated areas (or use approved respirator as determined by local safety/industrial hygiene personnel). Keep away from open flames, sparks, hot surfaces or other sources of ignition.

Degreasing Solvent is combustible and toxic to eyes, skin, and respiratory tract. Wear protective gloves and goggles/face shield. Avoid repeated or prolonged contact. Use only in well-ventilated areas (or use approved respirator as determined by local safety/industrial hygiene personnel). Keep away from open flames or other sources of ignition.

Clean all tail rotor hub assembly parts except teflon bearings with degreasing solvent (C62). Dry with clean, dry air. Clean teflon bearings with a clean cloth lightly dampened with acetone (C2).

5-200. REPAIR — TAIL ROTOR HUB.

a. Repair tail rotor hub yoke in accordance with figure 5-58.

b. Repair tail rotor hub liner bearing housing in accordance with figure 5-61.

c. Repair tail rotor hub trunnion. Refer to paragraph 5-219.

d. Support yoke tangs on a suitable support and press out bushing. (AVIM)

e. Clean out aged primer from bushing hole and apply unreduced primer (C118) to hole in yoke and to O.D. of bushing. Install bushing while primer is wet (bushing flange to face inboard). Ensure that bushing flanges are fully seated (AVIM)

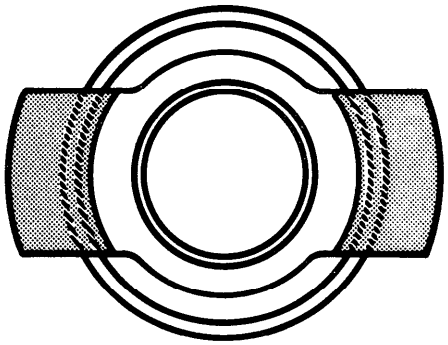

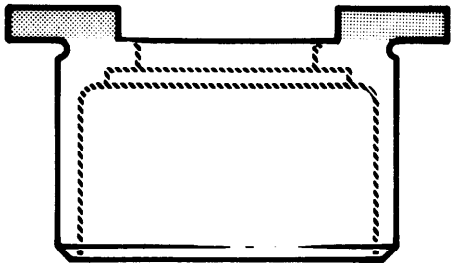

206010-192

TYPE OF DAMAGE	DAMAGE LOCATION SYMBOLS	
	MAXIMUM DAMAGE AND REPAIR DEPTH	
MECHANICAL DAMAGE	0.010 in. before and after repair	0.015 in. before and after repair
CORROSION	0.010 in. before and after repair	0.015 in. before and after repair
MAXIMUM AREA PER FULL DEPTH REPAIR	0.050 sq. in.	0.250 sq. in.
NUMBER OF REPAIRS	One per ear	Two
EDGE CHAMFER TO REMOVE DAMAGE	0.030 in.	0.030 in.

NOTES:

1. No cracks are permitted.
2. No wear through permitted.

Figure 5-61. Inspection and Repair Limits — Tail Rotor Hub Bearing Liner

f. Insert suitable gage blocks between yoke tangs to compensate for yoke deflection and to maintain **1.120 to 1.124** inch dimension between yoke tangs during reaming operation. Line ream bushings to **0.3750 to 0.3755** inch diameter. Insert a new bolt (1, figure 5-60) through yoke bushings; bolt shall be free fitting. Remove gage blocks. (AVIM)

g. Rework of yoke assembly (AVIM) is to be accomplished only when required to eliminate interference in the yoke radius area (figure 5-62). Remove only the minimum material to achieve necessary clearance.

(1) Mark location of interference on pitch horn and yoke.

(2) Remove tail rotor blades.

NOTE

Rework of blade pitch bar(s) or yoke assembly or both may be done to relieve interference.

(3) If interference in yoke radius is minor, chamfer (break) corner of blade pitch horn bar up to **0.060** inch by **45** degrees in locations of contact with yoke chamfer radius. Finish reworked area and smooth all corners to **0.030** inch radius using aluminum oxide abrasive (C45). Touch up reworked areas with epoxy primer (C116).

(4) Reinstall tail rotor blades and determine if correct clearance can be obtained.

(5) If correct clearance is not obtained, remove and disassemble tail rotor hub assembly.

(6) Using a straight edge reference, locate and mark where radius intersects 20 degree inner chamfer surface of yoke.

(7) Rework should not alter the 20 degree flat chamfer surface but should extend the flat surface to relieve interference with blade pitch bar. The rework must extend no farther than necessary to relieve interference and no farther than existing radius. Maintain a minimum of **0.250** inch radius at interface with existing surface(s).

(8) Remove material in interference area(s) using a half-round file. Do not remove more than **0.035** inch material thickness.

(9) Smooth rework area(s) using aluminum oxide abrasive (C45).

(10) Temporarily reinstall blade and check that correct contact with blade pitch horn is obtained. Remove blade.

(11) Touch up reworked areas with chemical conversion coating (C38), and primer (C116).

(12) Reassembly and install tail rotor assembly.

(13) Check rigging.

5-201. ASSEMBLY — TAIL ROTOR HUB.

a. Replace trunnion bearing races (26, figure 5-60). Position race (26) on trunnion (9) with chamfered I.D. of race toward center of trunnion. Press race onto trunnion flush to **0.010** inch below end of trunnion. Repeat on other end of trunnion.

b. Apply zinc chromate primer (C118) to O.D. of bearing (16) and allow to dry. Heat liner (14) with a heat lamp and install bearing in liner. Ensure that bearing seats.

c. Apply solid film lubricant corrosion inhibiting (C100) on O.D. of liner. Install washer (15) (black rubber side showing) in groove of liner (14).

d. Prior to positioning trunnion in yoke, apply chemical coating (C38) to inner diameter of yoke. Position trunnion in yoke (8), then with light finger pressure roll lips of washers (15) outboard and install liner (14) on each end of trunnion.

e. Install thrust bushing (13) (teflon liner inboard) with nut (11) and washer (12). (One to three washers are required.)

f. Install tail rotor blades in accordance with paragraph 5-246.

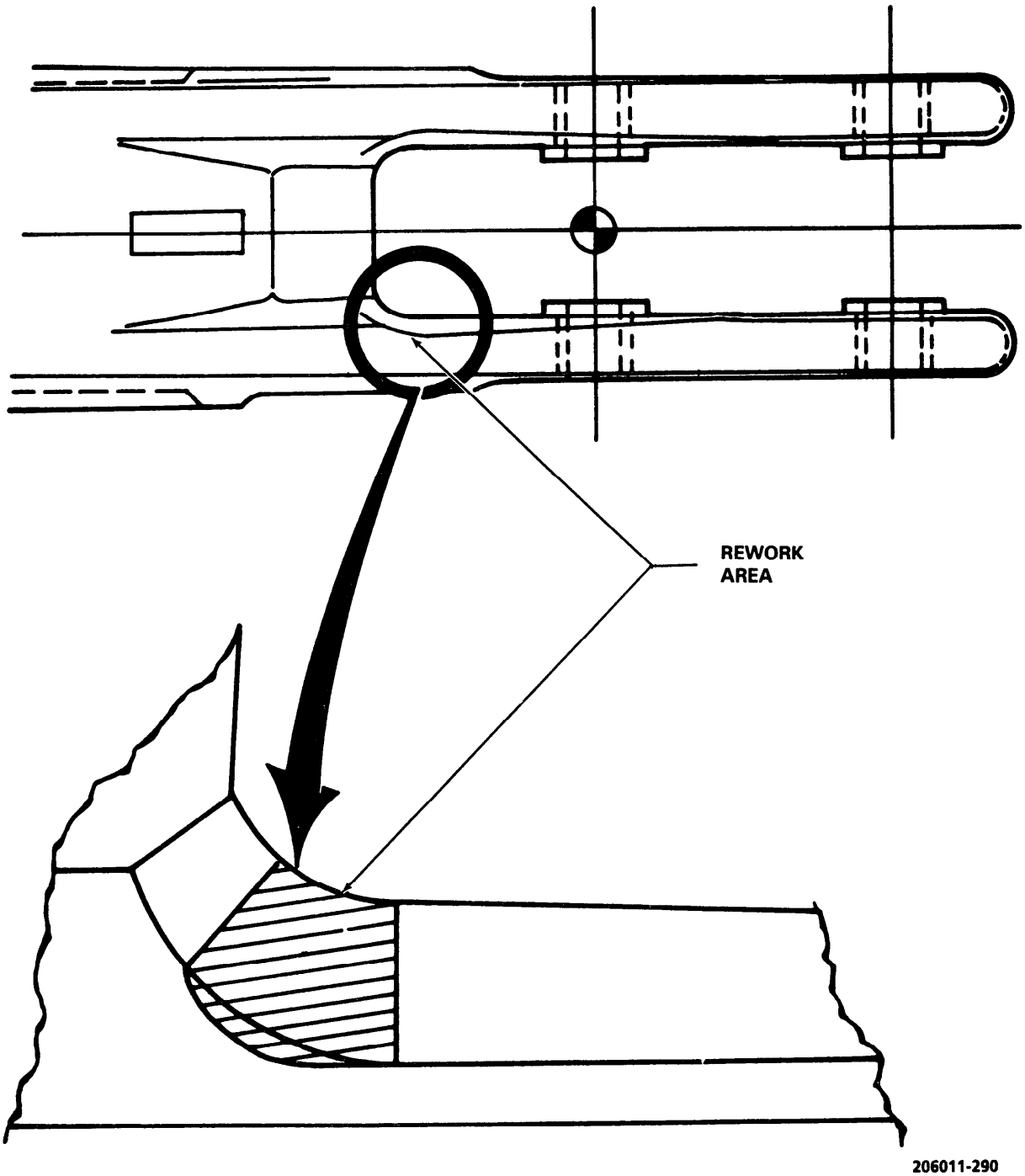

Figure 5-62. Tail Rotor Yoke Rework

5-202. BALANCING - TAIL ROTOR HUB AND BLADE ASSEMBLY.

Premaintenance Requirements for Tail Rotor Hub and Blade Assembly

Condition	Requirements
Model	OH-58A and OH-58C
Part No. or Serial No.	All
Special Tools	(T41) (T42) (T39)
Test Equipment	None
Support Equipment	None
Minimum Personnel Required	One
Consumable Materials	None
Special Environmental Conditions	None

a. Set up tool (T41, T39, and T42) to accomplish balance procedures in accordance with TM 55-4920-201-14.

b. Prior to balancing of tail rotor, ensure washers (23, figure 5-60) are installed on pitch horn (17).

NOTE

Washers (23) are used as counterweights to compensate aerodynamic pitch forces, do not add or remove washers to achieve balance. Reference Chapter 11, for balance forces - Tail Rotor Control.

c. Adjust nuts (11) to obtain chordwise balance as follows:

(1) Back off the nut on the light side; tighten the nut on the heavy side of the tail rotor assembly.

(2) Maintain rotational preload on trunnion of **20 TO 25 INCH-POUNDS**. No axial play in trunnion permissible.

NOTE

To measure rotational preload, fabricate a work aid from 1/2 x 1-1/16 x 5.0 inch brass or aluminum alloy stock as shown in figure 5-60. Position work aid in trunnion, attach a 10-pound pull spring scale to work aid and check preload. Scale should read 5 to 6-1/4 pounds (20 TO 25 INCH-POUNDS rotational preload).

NOTE

Use washers (12) as required to obtain alignment of nut slots to cotter pin holes. Maximum of 3 washers allowed under each nut.

(3) Install cotter pins (21) after chordwise balance is obtained.

d. Balance spanwise as follows:

CAUTION

Washer series AN960 and bolts NAS 6606-31 through NAS 6606-34 are authorized for all locations. Washer AN 970-6 and bolt NAS 1306-36, are authorized for outboard locations only. The NAS 1306-36 bolt may contact washer stack-up on pitch horn if used on inboard locations, but may be used provided that there is adequate clearance. A maximum of four washers is authorized for inboard locations (2 under nut and two under bolt head, or one under nut and three under bolt head). A maximum of six washers is authorized at outboard locations. A minimum of one washer is always required under nut and one washer is desired but not mandatory under bolt head when using two washers on any one bolt. At least one full thread of bolt shall be exposed beyond nut. Use minimum length belt required to ensure only threaded portion of bolt shank is exposed.

NOTE

Look for interference between pitch horn tangs (ears), balance weights, and yoke assembly. Pitch horn ring bar must contact chamfered inner surface of yoke assembly, either at forward or aft surface of blade assembly. Pitch horn ring bar must not first contact radius at end of machined surface.

(1) Place combinations of washers, (AN 960-616, AN 960-616L and AN 970-6), centered on blade attachment bolts as required to attain balance and to ensure nut does not bottom out on bolt grip. Install bolts with heads from either side but all four blade bolts must be installed from the same side. One method for determining the number of washers to be added or subtracted is to temporarily place the washers on head of bolt until balance is achieved. Prior to installing additional washers on light side of hub and blade assembly ensure excess washers are removed from heavy side. It is advisable to use the same length bolts at corresponding inboard or outboard locations.

WARNING

Titanium bolts and nuts are no longer authorized for installation on tail rotor hubs. The self-locking feature of the nut destroys the threads on the titanium series bolt.

(2) Torque blade bolts with selected balance washers **140 TO 160 INCH-POUNDS**.

(3) Remove balancing tools from tail rotor assembly.

5-203. INSTALLATION — TAIL ROTOR HUB.

a. If the tail rotor hub assembly includes the dynamic balance wheel, install the tail rotor hub and blade assembly in accordance with paragraph 5-188.

b. If the tail rotor hub assembly does not include the dynamic balance wheel, install the tail rotor hub and blade assembly in accordance with paragraph 5-189.

5-204. TAIL ROTOR PITCH CHANGE MECHANISM.

5-205. DESCRIPTION — TAIL ROTOR PITCH CHANGE MECHANISM. The tail rotor pitch change mechanism includes a bellcrank, rod, and lever assembly mounted on the gearbox. The tail rotor pitch change mechanism provides for transferring pitch changes to tail rotor blades.

5-206. CLEANING — TAIL ROTOR PITCH CHANGE MECHANISM. Spot clean with naphtha (C22) the control rod (5, figure 5-64), levers (6), idler clevis (25), and control housing (26).

5-207. INSPECTION — TAIL ROTOR PITCH CHANGE MECHANISM.

a. Inspect for oil leakage around boot and housing to gearbox seal. Inspect boot for cuts, tears, deterioration, and security.

b. Inspect bearings for smooth operation, linkage for ease of operation and mechanism for damage.

c. Inspect for metal-to-metal contact between knurled nut (8), liner (9), and control tube (7, figure 5-54). No metal-to-metal contact permitted.

d. Inspect for excessive rotational looseness of crosshead (5), control tube (7), nut (3), and washer (4). Disassembly inspection of key (16), slot and pin hole in control tube (7) required if movement exceeds **0.200** inch when measured with a dial indicator at approximate center of the head of bolt (20).

WARNING

There must be no rotational movement between crosshead (5), washers (4), nut (3), and control tube (7). These components must move as an assembly.

e. Ensure control housing and trunnion cap assembly are properly sealed.

5-208. REMOVAL — TAIL ROTOR PITCH CHANGE MECHANISM.

WARNING

The tail rotor pitch change mechanism must be removed and installed as an assembly, to preclude possibility of damage to components. Alternate procedures will not be used.

a. Remove tail rotor hub and blade assembly in accordance with paragraph 5-183.

b. Remove vertical fin in accordance with paragraph 2-267.

c. Remove cotter pin (15, figure 5-64), nut (4), washer (3), and bolt (1) with washer (2) to disconnect control rod (5) from levers (6).

d. Remove three nuts (27) and washers (28) attaching control housing (26) to tail rotor gearbox.

e. Remove sealing compound at junction of control housing (26) and tail rotor gearbox.

f. Remove pitch change mechanism as an assembly from tail rotor gearbox. Catch pitch key (49) as the tail rotor control tube (37) clears the tail rotor gearbox.

g. To avoid contamination of tail rotor gearbox components and bearings, cover with barrier paper (C26) or equivalent.

5-209. DISASSEMBLY — TAIL ROTOR PITCH CHANGE MECHANISM.

a. Remove cotter pin (15, figure 5-64), nut (10), washer (9), bolt (7) with washer (8). Remove levers (6).

b. Remove sealing compound at junction of trunnion cap (13) and trunnion (14). Cut lockwire, remove four bolts (11), and washers (12) that attach trunnion cap (13) to trunnion (14). Remove trunnion cap (13).

c. Remove cotter pin (15), nut (16), and washer (17) from control tube (37). Remove control tube (37).

d. Cut lockwire on inboard and outboard locations from boot (18). Remove trunnion (14) with bearing (19) and remove boot (18).

e. Remove bearing (19) and seal (20) from trunnion (14).

f. Remove cotter pin (48), nut (24), washer (23), and remove bolt (21) with washer (22). Remove idler clevis (25) from control housing (26).

g. Remove packing (36), retaining ring (29), seals (30 and 32), and bearing (31) from control housing (26). (AVIM)

NOTE

Bushings (38) should be removed from control tube (37) for alignment of vent hole or replacement purposes only.

h. Remove bushing (38) from control tube (37).

5-210. INSPECTION — TAIL ROTOR PITCH CHANGE MECHANISM.

a. Inspect levers (6, figure 5-64) for nicks, dents, scratches, and corrosion. Inspect bushings (46 and 45) and bearings (47) for wear or roughness. Refer to figure 5-65 for limits.

b. Inspect trunnion cap (13, figure 5-64) for nicks, dents, scratches, and corrosion. Inspect fitting (40) for damage. Refer to figure 5-65 for limits.

c. Inspect trunnion (14) for nicks, dents, and corrosion; check trunnion spindles for wear. Refer to figure 5-66 for limits.

d. Inspect control housing (26) for nicks, dents, scratches, and corrosion; inspect bolt hole tangs by fluorescent penetrant method. Inspect bearings (34) for roughness. Inspect fitting for damage. Refer to figure 5-66 for limits.

e. Inspect idler clevis (25) for nicks, scratches, dents, and corrosion. Inspect I.D. of bushings. Refer to figure 5-67 for limits.

f. Inspect control tube (37) for mechanical or corrosion damage. Inspect inside each end of control tube to ensure plug corks (39) are installed. Refer to figure 5-68 for limits.

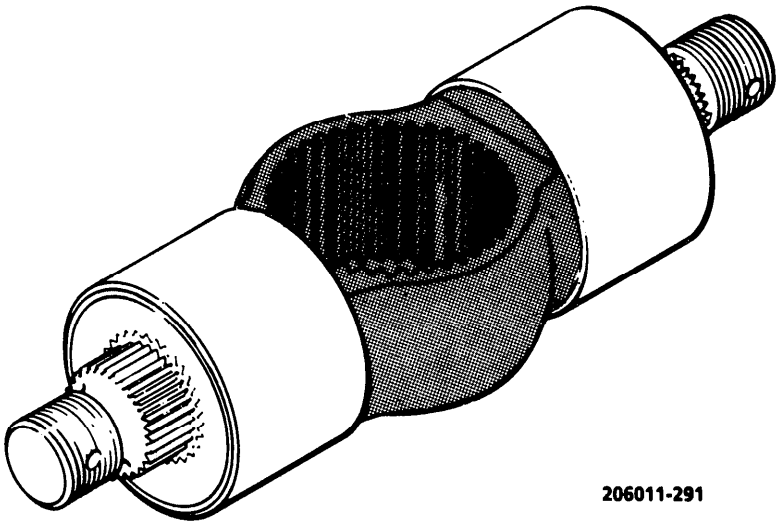

DAMAGE LOCATION SYMBOLS

TYPE OF DAMAGE	MAXIMUM DAMAGE AND REPAIR DEPTH	
MECHANICAL DAMAGE	0.003 in. before and after repair	
CORROSION DAMAGE	0.0015 in. before and 0.003 in. after repair	
MAXIMUM AREA PER FULL DEPTH REPAIR	0.100 sq. in.	0.250 sq. in.
NUMBER OF REPAIRS	One	One per segment
EDGE CHAMFER TO REMOVE DAMAGE	0.003 in.	0.020 in.
SPLINE DAMAGE:		
Depth:	1/3 of spline	
Length:	1/2 of spline	
Number:	Three	
THREAD DAMAGE:		
Depth:	1/3 of thread	
Length:	0.025 inch	
Number:	One per threaded segment	
BEARING LINER DAMAGE:	Replace trunnion assembly if scoring or pitting exceeds 0.001 inch depth after cleanup with crocus cloth. No cracking permitted	

Figure 5-63. Inspection and Repair Limits — Tail Rotor Hub Trunnion

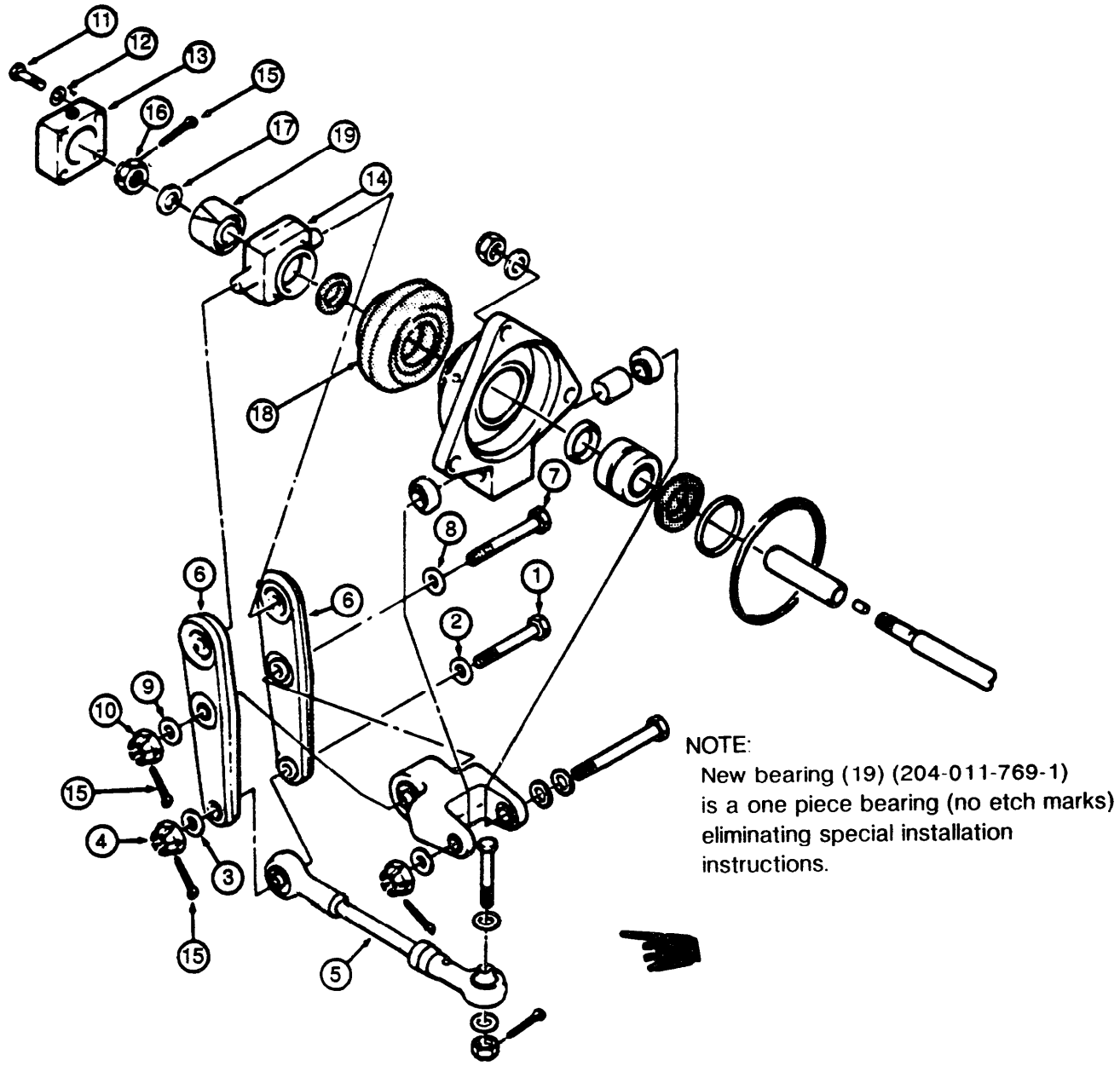

1. Bolt
2. Washer
3. Washer
4. Nut
5. Control Rod
6. Lever
7. Bolt
8. Washer
9. Washer
10. Nut
11. Bolt
12. Washer
13. Trunnion Cap Assembly
14. Trunnion
15. Cotter Pin
16. Nut
17. Washer
18. Boot
19. Bearing (See Note)

Figure 5-64. Tail Rotor — Pitch Change Mechanism (Sheet 1 of 2)

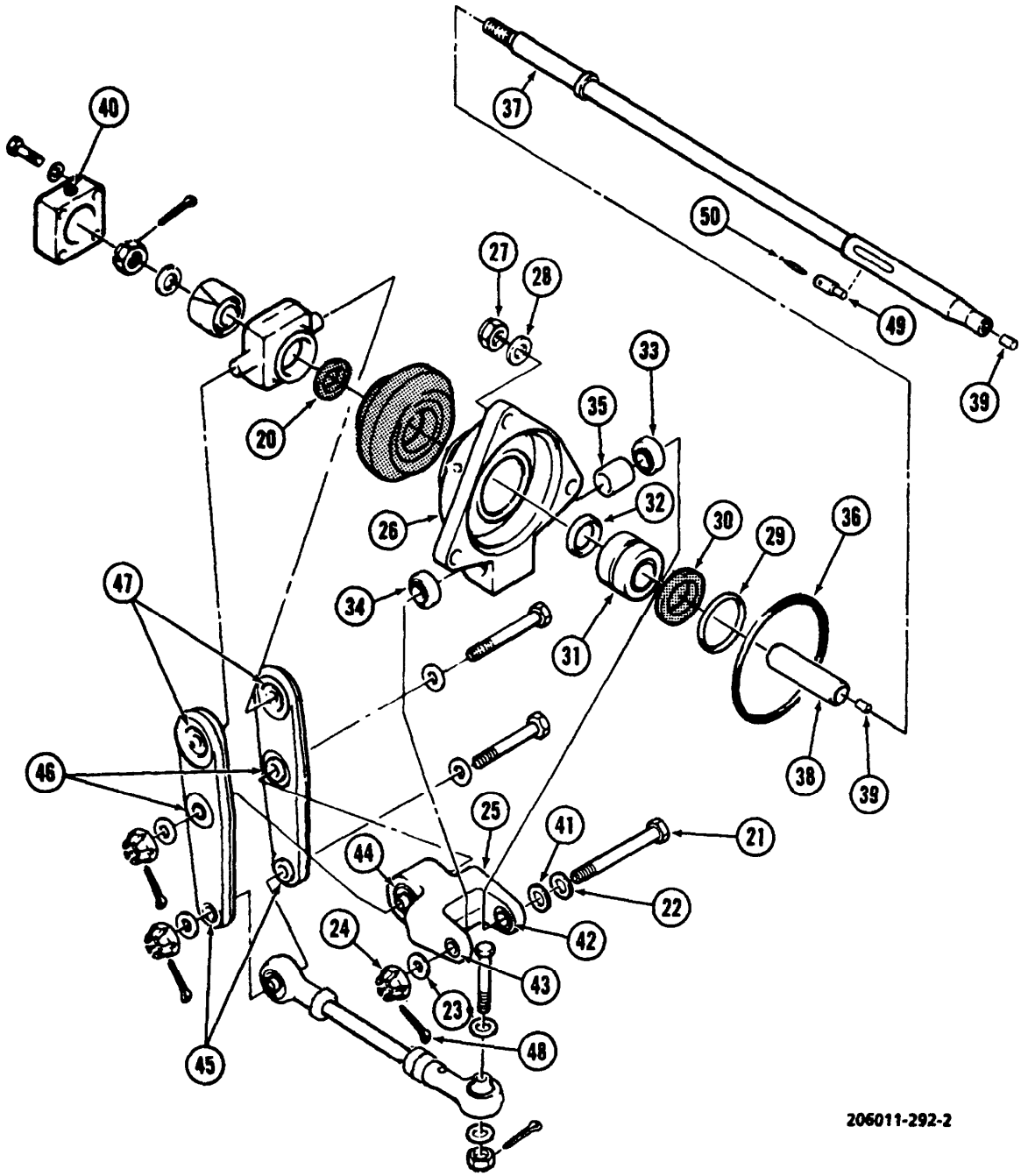

20.	Seal	28.	Washer	36.	Packing	44.	Bearing
21.	Bolt	29.	Retaining Ring	37.	Control Tube	45.	Bushing, Flanged
22.	Washer	30.	Seal	38.	Bushing	46.	Bushing, Flanged
23.	Washer	31.	Bearing	39.	Plug Cork	47.	Bearing
24.	Nut	32.	Seal	40.	Fitting	48.	Cotter Pin
25.	Idler Clevis	33.	Bearing	41.	Bushing, Sleeve	49.	Pitch Key
26.	Control Housing	34.	Bearing	42.	Bushing, Sleeve	50.	Straight Pin
27.	Nut	35.	Bushing	43.	Bushing, Flanged		

Figure 5-64. Tail Rotor — Pitch Change Mechanism (Sheet 2 of 2)

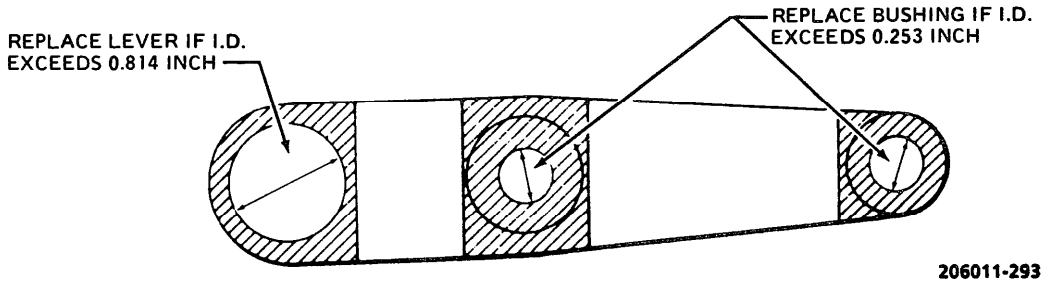

	AREA A	AREA B
NICKS, DENTS AND SCRATCHES	0.010	0.020
CORROSION	0.005	0.010
MAXIMUM AREA PER FULL DEPTH REPAIR	0.040 sq. in.	0.100 sq. in.
NUMBER OF REPAIRS	ONE PER SEGMENT	ONE PER SEGMENT
EDGE CHAMFER	0.030	0.060

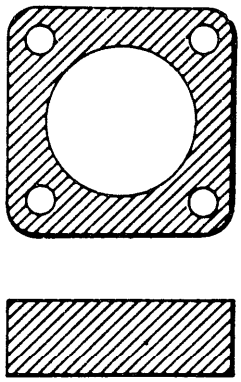

NICKS, DENTS AND SCRATCHES	0.020
CORROSION	0.010
MAXIMUM AREA PER FULL DEPTH REPAIR	*
NUMBER OF REPAIRS	*
EDGE CHAMFER	0.040

* NOT CRITICAL - LIMITS NOT ESTABLISHED

Figure 5-65. Repair Limits — Tail Rotor — Pitch Change Mechanism Lever and Cap

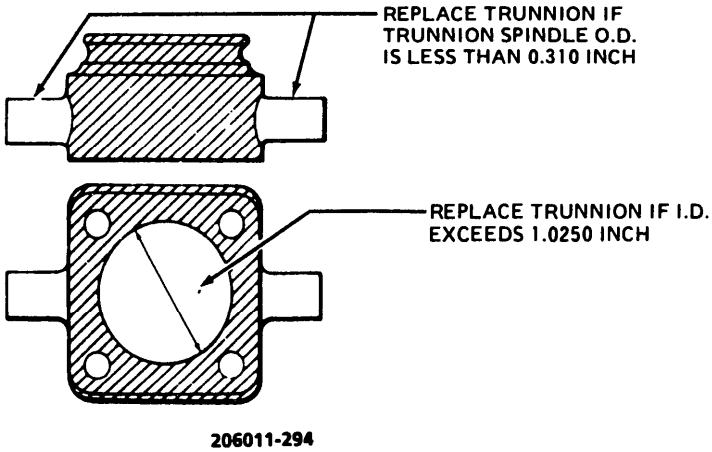

	AREA A	AREA B
NICKS, DENTS AND CORROSION	0.002	0.010
MAXIMUM AREA PER FULL DEPTH REPAIR	NOT TO EXCEED 1/4 CIRCUMFERENCE	0.100 sq. in
NUMBER OF REPAIRS	ONE PER SEGMENT	*
EDGE CHAMFER	0.010	0.030

* NOT CRITICAL - LIMITS NOT ESTABLISHED

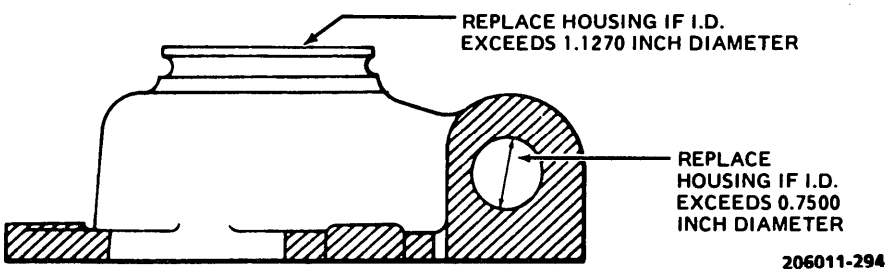

	AREA A	AREA B
NICKS, DENTS AND SCRATCHES	0.010	0.030
CORROSION	0.005	0.015
MAXIMUM AREA PER FULL DEPTH REPAIR	0.100 sq. in.	0.250 sq. in.
NUMBER OF REPAIRS	ONE PER SEGMENT	*
EDGE CHAMFER	0.030	0.060

* NOT CRITICAL - LIMITS NOT ESTABLISHED

Figure 5-66. Repair Limits — Tail Rotor — Pitch Change Mechanism Housing and Trunnion

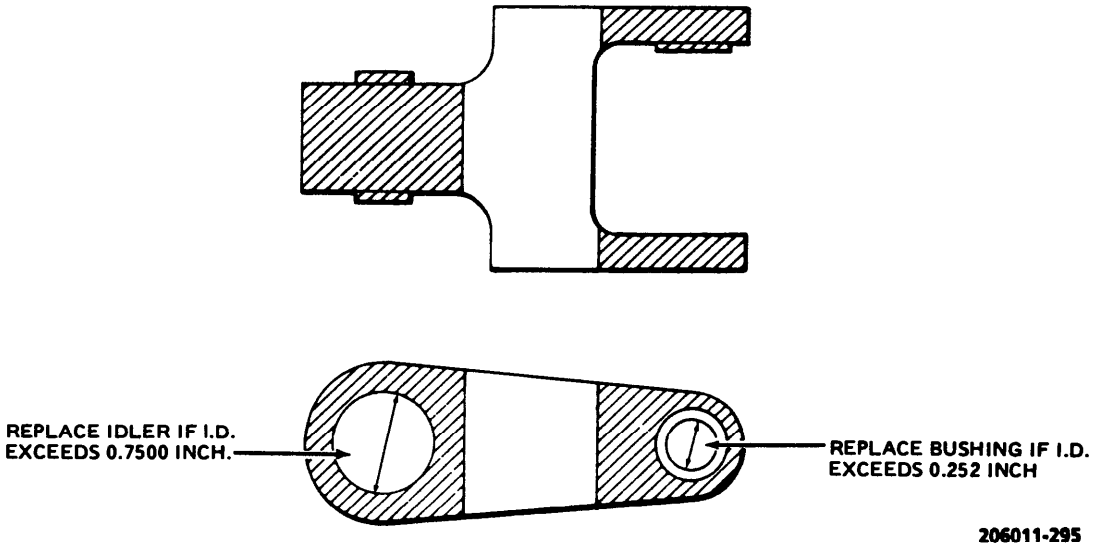

	AREA A	AREA B
NICKS, SCRATCHES AND DENTS	0.010	0.020
CORROSION	0.005	0.010
MAXIMUM AREA PER FULL DEPTH REPAIR	0.100 sq. in.	0.160 sq. in.
NUMBER OF REPAIRS	ONE PER SEGMENT	*
EDGE CHAMFER	0.030	0.060

* NOT CRITICAL - LIMITS NOT ESTABLISHED

Figure 5-67. Repair Limits — Tail Rotor — Pitch Change Mechanism Idler Clevis

g. Inspect control tube bushing (38) for wear steps, galling, and fretting. These conditions are not acceptable. Discoloration is acceptable provided area is smooth.

h. Inspect pitch key (49) and straight pin (50) for wear or mechanical damage. Refer to figures 5-69 and 5-70 for limits.

i. Inspect tail rotor gearbox lubrication return ports for evidence of clotting.

j. Inspect boot for cuts, tears, holes, and deterioration. Replace boot if it fails to meet inspection criteria.

WARNING

Degreasing Solvent is combustible and toxic to eyes, skin, and respiratory tract. Wear protective gloves and goggles/face shield. Avoid repeated or prolonged contact. Use only in well-ventilated areas (or use approved respirator as determined by local safety/industrial hygiene personnel). Keep away from open flames or other sources of ignition.

5-211. CLEANING — TAIL ROTOR PITCH CHANGE MECHANISM. Remove sealing compound from cap and trunnion surfaces. Clean all parts with degreasing solvent (C62). Dry with filtered compressed air. Do not allow bearings to spin while drying.

5-212. REPAIR/REPLACEMENT — TAIL ROTOR PITCH CHANGE MECHANISM. (Figure 5-64)

a. Replace lever bushings (46 and 45, figure 5-64) that do not meet inspection requirements. Replace lever bearings (47) (AVIM) that are rough or ratchet when turned.

NOTE

If tail rotor pitch change mechanism bushings do not meet inspection requirements, replace as follows:

(1) Press out failed bushing. Apply wet unreduced primer (C118) to faying surfaces and install bushing.

(2) Ream bushing (45) and (46) to **0.2500 to 0.2510** inch diameter after install.

b. Replace trunnion cap (13) that does not meet inspection requirements. Replace fitting (40) when damaged.

c. Replace trunnion (14) that does not meet inspection requirements. Replace trunnion bearing (19) that is rough or ratchet when turned.

d. Replace control housing (26) that does not meet inspection requirements. Replace housing bearings (31, 33 and 34) that are rough or ratchets when turned. Replace fitting when damaged.

(1) Press bearing (34), located on the grease fitting side, into the control housing (26) to remove bearing (33).

(2) Press out bushing (35) and bearing (34) from the removed bearing (33) side of the control housing (26).

e. Replace idler clevis (25) that does not meet inspection requirements. Replace idler clevis bushings (42 and 43) that are worn. Replace bearing (44) that is rough or ratchets when turned.

f. Replace control tube (37) that does not meet inspection requirements. Replace plug corks (39) on each end of tube if deteriorated or missing. Replace control tube bushing (38) if measurable damage is detected on any area of the outer surface.

g. Replace pitch key (49) if it does not meet inspection requirements. Replace straight pin (50) if it does not meet inspection requirements.

h. Replace pitch change boot (18, figure 5-64) that does not meet inspection criteria.

NOTE

It may be necessary to remove the vertical fin to obtain clearance to work. Refer to paragraph 2-267. Care should be taken when sliding the new boot over trunnion (14) to prevent tearing the boot.

(1) Remove cotter pin (15), nut (4), washer (3), bolt (1), with washer (2) and disconnect control rod (5) from levers (6).

(2) Remove cotter pin (15), nut (10), washer (9), bolt (7) with washer (8). Remove levers (6). Cut lockwire on inboard and outboard locations from boot (18). Slide boot over trunnion (14).

(3) To install the new boot, slide boot (18) over trunnion (14). Lockwire inboard and outboard ends of boot with lockwire (C96). Install levers (6) on trunnion (14) and connect idler clevis with bolt (7), washers (8 and 9), and nut (10). Torque nut (10) **80 TO 90 INCH-POUNDS** and install cotter pin (15).

(4) Connect levers (6) to control rod (5) with bolt (1), washers (2 and 3), and nut (4). Torque nut (4) **80 TO 90 INCH-POUNDS** and install cotter pin (15).

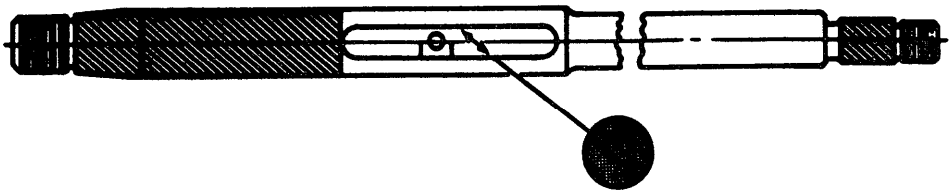

DAMAGE LOCATION SYMBOLS

TYPE OF DAMAGE	MAXIMUM DAMAGE AND REPAIR DEPTH		
MECHANICAL AND CORROSION	0.010 in. before and after repair	0.002 in. before and after repair	0.001 in. before and after repair
MAXIMUM AREA OF FULL DEPTH REPAIR	0.010 in.	1/4 Circumference	Not critical
NUMBER OF REPAIRS	1/Seg Lg	Not critical	Not critical
EDGE CHAMFER	0.030 in.	0.030 in.	0.030 in.
BORES			
THREADS DEPTH:	1/3 Thread		
LENGTH:	1/4 in.		
NUMBER	Two		

Figure 5-68. Repair Limits — Tail Rotor — Pitch Change Mechanism Control Tube

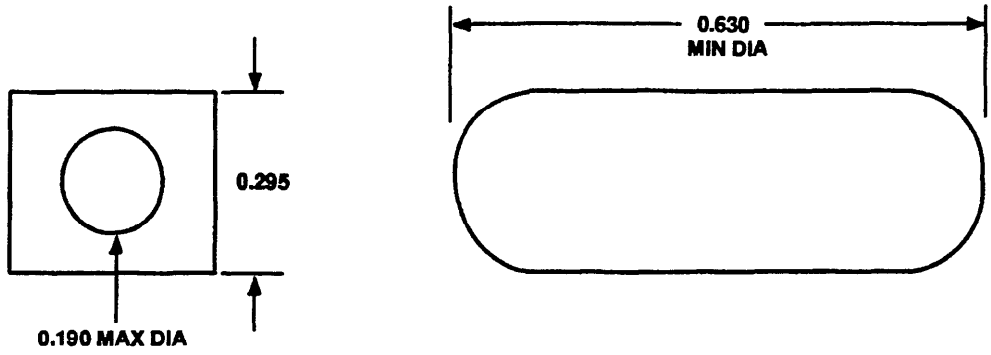

NICKS, SCRATCHES, AND DENTS	NOT CRITICAL – LIMIT NOT ESTABLISHED
MAXIMUM AND MINIMUM WEAR	AS PER ILLUSTRATION

Figure 5-69. Wear limits - Tail Rotor - Pitch Change Mechanism Pitch Key

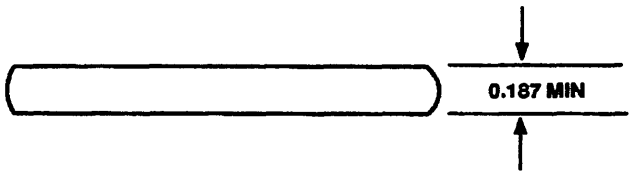

NICKS, SCRATCHES, DENTS, AND PITS	NEGLIGIBLE EXCEPT ON END; 0.001 OR LESS AFTER REPAIR MUST BE SMOOTH IN AREA OF CONTACT WITH KEY (NO PRECEPTIBLE DEPTH)

WEAR – NO PRECEPTIBLE WEAR STEPS

Figure 5-70. Wear Limits - Tail Rotor - Pitch Change Mechanism Straight Pin

5-213. ASSEMBLY — TAIL ROTOR PITCH CONTROL MECHANISM. (Figure 5-64).

WARNING

The Tail Rotor Pitch Change Mechanism must be removed and installed as an assembly to preclude possibility of damage to the component. Alternate procedures will not be used.

NOTE

Ensure hole in bearing (31, Figure 5-64) aligns with grease fitting in housing (26), and lip of seals (30 and 32) are facing away from gearbox. Ensure lip of seal (20) faces towards gearbox. This will allow purging and prevent grease from being pumped into gearbox.

a. Install bearing (31), and seals (30 and 32), retaining ring (29), and packing (36) in control housing (26).

NOTE

Ensure vent hole in bushing (38) and control tube (37) are clean and unobstructed.

b. Apply wet unreduced zinc chromate primer (C118) on faying section of control tube (37) that will mate with bushing (38). While zinc chromate primer is still wet, install bushing (38) on control tube (37) and align by inserting a piece of lockwire (C97) into bushing and control tube hole until zinc chromate dries.

c. Install control tube (37) through control housing (26)

d. Handpack bearing (19), with lubricant (C77) then press bearing (19) into trunnion (14) with etched "V" pointing inboard.

NOTE

If new bearing (19), P/N 204-011-769-1 is not etched, it may be installed in either direction.

e. Install seal (20) in trunnion (14) with seal lip slightly recessed in trunnion.

f. Install boot (18) on control housing (26) with lockwire (C96). Install trunnion assembly (14) and lockwire to boot (18).

g. Install washer (17) and nut (16) on control tube and torque nut (16) **45 to 65 inch pounds** and install cotter pin (15).

NOTE

If unable to align cotter pin hole using correct torque (45 to 65 inch pounds), one additional washer (17) may be used.

h. Install trunnion cap (13) with four washers (12), and four bolts (11), torque bolts (11) to **28 inch pounds** and lockwire (C96) in pairs. Apply sealing compound (C131) around mating surface slot of trunnion and cap.

i. Install idler clevis (25) to control (26) with bolt (21), bushing (41), washers (22) and (23), and nut (24). Torque nut (24) **80 to 90 inch pounds** and install cotter pin (48).

j. Install lever (6) on trunnion (14) and attach idler clevis (25) with bolt (7), washers (8 and 9), and nut (10). Torque nut (10) **80 to 90 inch pounds** and install cotter pin (15).

5-214. INSTALLATION — TAIL ROTOR PITCH CHANGE MECHANISM. (Figure 5-64).

WARNING

Prior to installing pitch change mechanism ensure cotter pin is installed in the tail rotor output shaft retaining nut. The head of the cotter pin must be installed from the center of the nut with the head positioned in one of the slots on the output shaft. One tang of the cotter pin shall be bent inboard and the other bent outboard and cut flush at the edge of the nut.

a. Install packing (36, Figure 5-64) into control housing (26). Position pitch key (49) into control tube (37) and slide pitch change mechanism assembly control tube into tail rotor gearbox until control housing (26) is completely in place with tail rotor gearbox. Install three washer (28), three nuts (27), and torque to **75 inch pounds**.

NOTE

Control rod (5) has riveted rod end on outboard side. Inboard side is adjustable. A witness hole is provided on inboard end. Rod end threads must appear in witness hole.

b. Connect lever (6) to control rod (5) with bolt (1), washers (2 and 3), and nut (4). Torque nut (4) **80 to 90 inch pounds** and install cotter pin (15).

WARNING

Acetone is extremely flammable and toxic to eyes, skin, and respiratory tract. Wear protective gloves and goggles/face shield. Avoid repeated or prolonged contact. Use only in well-ventilated areas (or use approved respirator as determined by local safety/industrial hygiene personnel). Keep away from open flames, sparks, hot surfaces or other sources of ignition.

c. Clean exterior of control housing (26) and tail rotor gearbox junction with acetone (C2). Apply a bead of sealing compound (C131) to the circumferential junction slot.

d. Install tail rotor hub and blade assembly. Refer to paragraph 5-188.

e. Rig tail rotor controls. Refer to paragraph 11-94.

5-215. TAIL ROTOR HUB TRUNNION.

5-216. DESCRIPTION — TAIL ROTOR HUB TRUNNION. The trunnion, (9, figure 5-60) splined to the tail rotor gearbox shaft, drives the tail rotor hub and blades.

5-217. REMOVAL — TAIL ROTOR HUB TRUNNION. Remove trunnion from tail rotor hub in accordance with paragraph 5-197.

5-218. INSPECTION — TAIL ROTOR HUB TRUNNION. (AVIM) Refer to paragraph 5-198 and figure 5-63.

5-219. REPAIR — TAIL ROTOR HUB TRUNNION.

WARNING

Degreasing Solvent is combustible and toxic to eyes, skin, and respiratory tract. Wear protective gloves and goggles/face shield. Avoid repeated or prolonged contact. Use only in well-ventilated areas (or use approved respirator as determined by local safety/industrial hygiene personnel). Keep away from open flames or other sources of ignition.

a. Remove grease, oil, etc., by soaking with degreasing solvent (C62). Scrub the inboard ends of the stud with a fiber brush (C31) to remove all traces of zinc chromate primer. Thoroughly clean the outboard ends of the stud and lockring joint.

b. Place the trunnion assembly upright under a head lamp, then flood the top stud lockring joint area and the cavity at the inboard end of the bottom stud with primer (C114). Allow primer to penetrate the joint area for approximately 15 minutes. Rotate the trunnion assembly and repeat the procedure.

CAUTION

Do not use heat lamp in next operation.

c. Remove heat lamp. Flood the previously primed area with sealant (C120). Allow trunnion to cure overnight before installing in tail rotor assembly.

d. Refer to figure 5-63 for inspection and repair limits.

5-220. INSTALLATION — TAIL ROTOR HUB TRUNNION. Install the trunnion in the tail rotor hub in accordance with tail rotor hub assembly procedures in paragraph 5-201.

5-221. TAIL ROTOR PITCH HORN.

5-222. DESCRIPTION — TAIL ROTOR PITCH HORN. The tail rotor pitch horn assembly (17, figure 5-60) transfers pitch change movement to the tail rotor blades.

5-223. REMOVAL — TAIL ROTOR PITCH HORN.

a. Remove tail rotor blade in accordance with paragraph 5-243.

b. Cut lockwire and remove two bolts (19, figure 5-60), and washers (18).

c. Remove pitch horn (17).

5-224. INSPECTION — TAIL ROTOR PITCH HORN. Inspect the tail rotor pitch horn stud for burrs, damaged threads, and for straightness. Ensure that the stud retaining pin is point staked adjacent to the pin hole.

5-225. REPAIR — TAIL ROTOR PITCH HORN.

NOTE

For pitch horn repair limits refer to figure 5-71.

Polish out nicks and gouges with fine India stone (C84). Blend repair area into surrounding areas.

5-226. INSTALLATION — TAIL ROTOR PITCH HORN. Refer to figure 5-60.

a. Assemble bolts (19) and washers (18) in pitch horn.

b. Fill area of pitch horn that mates with blade with sealing compound (C131).

c. Install pitch horn (17) on blade (7) and torque bolts (19) to **30 TO 40 INCH-POUNDS**. Do not lockwire at this time.

d. Apply a smooth coat of sealing compound (C131) to all remaining unpainted surfaces of blade butt adjacent to pitch horn (17). Blend into squeezed out sealing compound around pitch horn.

e. Allow one hour for the sealing compound to setup.

CAUTION

Ensure that the pitch horn attachment bolt lockwire does not contact yoke.

f. Torque attachment bolt (19) to **30 TO 40 INCH-POUNDS**, and install lockwire (C96).

5-227. TAIL ROTOR HUB AND BLADE ASSEMBLY. (After compliance with MWO 55-1520-228-50-25.)

WARNING

Parts of the standard tail rotor (before MWO 55-1520-228-50-25) although similar, cannot be used on the improved tail rotor (after MWO 55-1520-228-50-26). The following parts must always be used together to assure safe operation:

Hub and Blade Assembly	206-011-810 series (used after MWO 55-1520-228-50-25)
Yoke Assembly	206-011-819-101
Trunnion	206-011-812-5
Blade Assembly	206-016-201-111

5-228. DESCRIPTION — TAIL ROTOR HUB AND BLADE ASSEMBLY. The tail rotor hub and blade assembly consists of an aluminum alloy forged yoke and stainless steel blades. The blades are mounted in the yoke by means of spherical bearings which are mounted in the grip plates on the pitch change axis. The spherical bearings provide for pitch change of the blades. The yoke and blade assembly is mounted on the 90 degree gearbox shaft by a splined trunnion, mounted in bearings in the yoke, to provide a flapping axis for the assembly. At the time of assembly, spanwise balance is accomplished by use of washers on the blade retention bolts, and chordwise balance is attained by use of washers on the trunnion bearing housing.

Premaintenance Requirements for Tail Rotor Hub and Blade Assembly

Condition	Requirements
Model	OH-58A and OH-58C
Part No. or Serial No.	All
Special Tools	(T46) (T44)
Test Equipment	None
Support Equipment	None
Minimum Personnel Required	Two
Consumable Materials	(C2) (C11) (C17) (C38) (C37) (C22) (C50) (C55) (C45) (C77) (C84) (C62) (C94) (C96) (C91) (C100) (C102) (C110) (C115) (C116) (C118) (C124) (C126) (C127) (C131)(C143) (C154)
Special Environmental Conditions	None

5-229. REMOVAL — TAIL ROTOR HUB AND BLADE ASSEMBLY.

a. Remove cotter pins (10, figure 5-72), nuts (8), washers (9), and bolts (16).

b. Remove cotter pins (15), nuts (14), cupped washers (13), and thin washers (12). Remove pitch links (11).

c. Remove nut (17) and washer (18). Pull crosshead (20) from control tube (26) with the use of a suitable puller (T44). Remove pin (19) from crosshead (20) or control tube (26).

d. Cut and remove lockwire from knurled nut (21) and balance wheel (23). Remove knurled nut (21), liner (7), shims (22), and balance wheel (23). Knurled nut and balance wheel are threaded onto the tail rotor gearbox shaft.

e. Straighten tabs on special washer (5) and remove nut (6). Remove special washer (5), static stop

(4), rubber bumper (3), and shim (2). Discard special washer (5).

NOTE

Shim (2) serves to position static stop (4) and the positioning for tail rotor blade-to-tailboom clearance. If the hub and blades are to be reinstalled, identify the shim during removal for reuse during installation.

f. Slide tail rotor hub and tail rotor blades (1) from the tail rotor gearbox shaft and remove spacer (25).

g. Remove pin (28) from control tube (26).

NOTE

Review Overhaul and Retirement schedule in Chapter 1.

5-230. DISASSEMBLY — TAIL ROTOR HUB AND BLADES.

a. Identify mated tail rotor blades (9, figure 5-73) to hub (2) location before removal to ensure correct installation if the same blades and hub are to be reused.

b. Identify each bolt (7 and 8), nut (10), and washers (3, 4, 5, and 6) combinations to each installed location to prevent a possible change in spanwise balance.

c. From one tail rotor blade (9), remove nuts (10), washers (3, 4, 5, and 6), and bolts (7 and 8). Pull tail rotor blade (9) from hub (2), then remove opposite tail rotor blade in the same manner. Bolts, washers, and nuts should be installed in hub or tail rotor blade to ensure correct location and stackup for installation.

d. Refer to paragraph 5-252 for inspection/repair of tail rotor blades.

5-231. DISASSEMBLY — TAIL ROTOR HUB.

NOTE

Review overhaul and retirement schedule in Chapter 1 and retire all items scheduled for retirement. If tail rotor hub is being disassembled for replacement of defective part(s) instead of overhaul, disassemble only to extent necessary to replace defective part(s).

If there is evidence of an accident or incident damage, perform step b. of paragraph 5-233, prior to disassembly of tail rotor hub.

a. Cut lockwire and remove bolts (11, figure 5-74), washers (12), and weights (13) from each side of yoke (1). Weights and extra washers were selected for balance. Tag and secure for use during balance.

b. Remove housings (9) from each side of yoke (1). Thrust plugs (6) and shims (5) may remain in housings or on end of trunnion (3). Remove plugs and shims.

c. Remove trunnion (3) from yoke (1).

WARNING

Degreasing Solvent is combustible and toxic to eyes, skin, and respiratory tract. Wear protective gloves and goggles/face shield. Avoid repeated or prolonged contact. Use only in well-ventilated areas (or use approved respirator as determined by local safety/industrial hygiene personnel). Keep away from open flames or other sources of ignition.

5-232. CLEANING — TAIL ROTOR HUB.

a. Clean tail rotor hub parts with degreasing solvent (C62).

WARNING

Cleaning solvents are flammable and toxic. Use only in well-ventilated area. Avoid skin contact and inhalation of vapors. Protect eyes with safety glasses.

WARNING

Acetone is extremely flammable and toxic to eyes, skin, and respiratory tract. Wear protective gloves and goggles/face shield. Avoid repeated or prolonged contact. Use only in well-ventilated areas (or use approved respirator as determined by local safety/industrial hygiene personnel). Keep away from open flames, sparks, hot surfaces or other sources of ignition.

CAUTION

Do not spin bearings while drying.

b. Dry parts with filtered compressed air and lint-free clean cloths. Remove sealant using a plastic scraper and a cloth dampened with acetone (C2).

c. Remove paint from metal parts using general remover (C110).

d. After parts are cleaned the following corrosion prevention treatment should be accomplished.

WARNING

Degreasing Solvent is combustible and toxic to eyes, skin, and respiratory tract. Wear protective gloves and goggles/face shield. Avoid repeated or prolonged contact. Use only in well-ventilated areas (or use approved respirator as determined by local safety/industrial hygiene personnel). Keep away from open flames or other sources of ignition.

(1) Wash all ferrous parts in a clean rinse of degreasing solvent (C62).

(2) Each part shall be covered with a protective coating of corrosion preventive compound (C50).

5-233. INSPECTION — TAIL ROTOR HUB.

a. If there is no evidence of accident or incident damage, proceed with normal component repair or overhaul, as required.

b. If there is evidence of accident or incident damage, check for free movement of trunnion in yoke before disassembly.

c. Parts, components, or assemblies found worn or defective beyond reparable limits shall be scrapped.

d. Tolerance and limits set forth in the illustrations for wear and damage limits are the maximum acceptable. Parts exceeding these limits shall be scrapped unless otherwise indicated.

NOTE

Limit charts are provided to show the required fit between mating parts. It is not intended that all dimensions listed on limits chart be checked as a prescribed overhaul procedure; however, parts that show evidence of wear or physical damage must be checked dimensionally.

e. Inspect parts dimensionally and replace parts that are not within inspection limits. (Refer to figure 5-75).

f. Inspect yoke (1, figure 5-74), trunnion (3), and housing (9) for mechanical damage and corrosion. Refer to figures 5-75 through 5-78. If seal (7) and bearing (8) removal is necessary from housing (9), remove as follows:

(1) Fabricate a steel plug 0.750 inch in diameter by 4 to 5 inches long. Ends of plug must be square in relation to the shank in the plug.

(2) Fill the bearing housing (9) cavity approximately one-half full of high viscosity grease.

(3) Support the flat portion of bearing housing (9) (grease fitting side) on a suitable flat surface. Position housing so that grease fitting (10) is off edge of surface and will not be damaged.

(4) Insert the fabricated plug into bearing, then strike the plug a sharp blow with a hammer. This will start the bearing (8) moving out of housing. Replenish grease as required so that the plug will not contact the bearing housing base (9).

(5) Repeat steps (1) thru (4) on opposite bearing housing.

(6) Install serviceable trunnion bearings as indicated in steps (7), (8), and (9).

(7) Press bearing (8) into bearing housing (9). Press against markings on end of bearing until outer edge of bearing is 0.150 inch below edge of bearing housing.

(8) Press seal (7) into bearing housing (9) with lip of seal facing inboard as installed on hub.

(9) Repeat steps (7) and (8) on opposite bearing housing.

g. Inspect bearing liners (4, figure 5-74), of trunnion (3) for wear. (Refer to figure 5-78 for wear limits.) Replace liner if wear limits are exceeded as follows:

(1) Remove bearing liner (4) from trunnion (3), using a two-jaw puller.

(2) Repeat step (1) on other side of trunnion.

(3) Install bearing liners (4) as follows:

NOTE

To aid in installing bearing liners (4), locally fabricate two trunnion bearing liner plugs and a trunnion centering shaft. (See figure 5-79).

(4) Install fabricated trunnion centering shaft into trunnion to prevent distortion when pressing bearing liner onto trunnion spindle.

(5) Apply a film of lubricating oil (MIL-L-46152) to spindles of trunnion (3) and inner liners (4). Apply a heat lamp to inner liners until heated. Position bearing liner (4) on trunnion spindle with large chamfered inner surface of liner facing inboard. (See figure 5-74 view A).

(6) Press bearing liner (4) part way onto trunnion spindle. Remove from press and install locally fabricated plug into bearing liner. Press bearing liner onto trunnion (3) spindle until outboard edge of liner is flush with plug.

NOTE

Dimension from end of trunnion spindle to outboard edge of bearing liner must be 0.128 to 0.138 inches.

(7) Reverse trunnion and leave bearing liner plug in place to prevent installed bearing liner from moving while installing opposite bearing liner.

(8) Using second bearing liner plug as a guide, press opposite bearing liner on trunnion spindle as outlined in steps (4) thru (6).

(9) Clean inboard chamfered edges of bearing liners (4) and trunnion (3) spindle with naphtha (C22). Wipe dry with clean dry cloth before evaporation of naphtha.

(10) Apply a fillet of sealant (C17) around trunnion spindle to fill void between trunnion (3, figure 5-74) and chamfered edge of bearing liners (4). (See figure 5-74 view A).

(11) Cure sealant at 150 degrees Fahrenheit (66 degrees Celsius) for 3 hours prior to further assembly.

h. Inspect insert (14, figure 5-74) in yoke (1) for damaged threads and security. Return yoke assembly to next higher level of maintenance if insert (14) is damaged or loose.

i. Inspect grease fitting (10) for damage and security.

j. Inspect data plate (15) for condition and security.

k. Inspect bushings (2) in yoke (1) for looseness, inside diameter greater than **0.377** inch, fretting, or removal of cadmium plating. If these limitations are exceeded, replace bushings.

l. Deleted.

5-234. REPAIR — TAIL ROTOR HUB.

a. Polish out acceptable damage to housing (figure 5-76) with 400 to 600 grit paper (C126 or C127) or abrasive cloth (C45).

b. Polish acceptable damage to trunnion (figure 5-78) with a fine India stone (C84).

c. Polish out damage on yoke (figure 5-77) that is less than **0.005** inch with 400 to 600 grit paper (C126 or C127) or abrasive cloth (C45). If damage is **0.005** inch or greater return assembly to next higher level of maintenance for repair and shot peening.

d. Apply chemical conversion coating (C38) to all repaired aluminum surfaces. Apply brush cadmium plating solution C94) to all repaired steel surfaces that were previously plated.

e. Touch up repaired areas on previously painted surfaces with one coat of primer (C116) and two coats of acrylic lacquer (C91) in accordance with TM 55-1500-345-23.

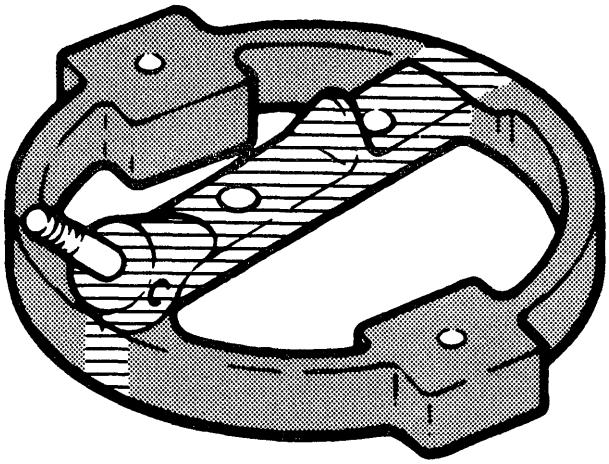

206011-299

	AREA A	AREA B
TYPE OF DAMAGE	MAXIMUM DEPTH	
NICKS, SCRATCHES, SHARP DENTS	0.010	0.030
CORROSION	0.005	0.015

NOTES:

1. Area A may have one repair area. Minimum radius of repair is 0.050 inch.

2. Area B may have one repair area on each side of the center cross piece. Minimum radius of repair is 0.350 inch.

3. The shank of pitch horn stud should not be damaged in excess of what can be cleaned up with crocus cloth (C55). Damage and subsequent cleanup on the stud threads must not exceed 1/3 OF THE THREAD DEPTH. A maximum of 2 threads may be damaged.

4. Repaired areas of surfaces A and B must be coated with primer (C115) and top coated with acrylic lacquer.

5. All dimensions are in inches.

Figure 5-71. Inspection and Repair Limits — Tail Rotor Pitch Horn

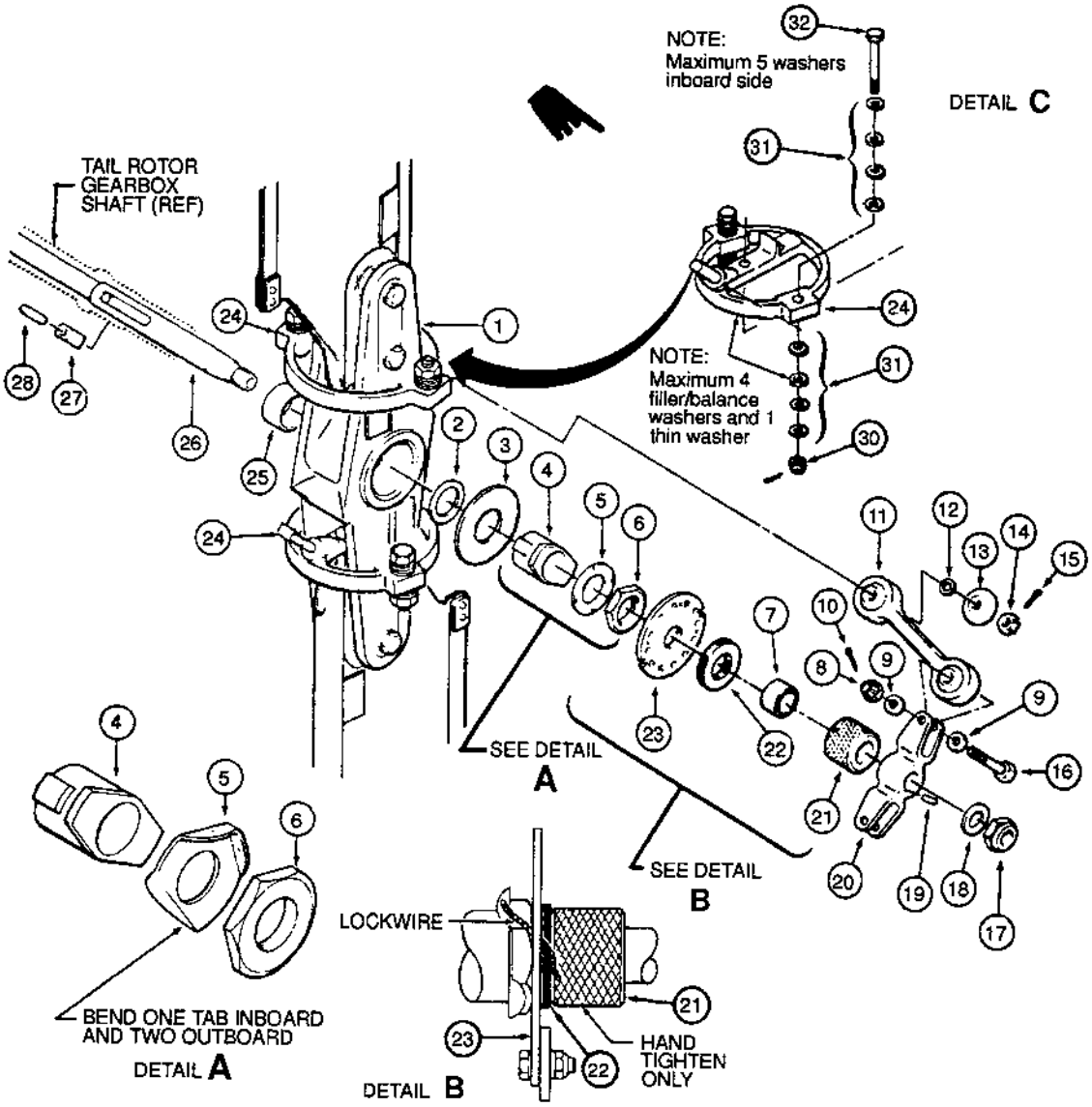

1.	Tail Rotor Hub and Blade	12.	Thin Washer	23.	Balance Wheel
2.	Shim	13.	Cupped Washer	24.	Pitch Horn
3.	Rubber Bumper	14.	Nut	25.	Spacer
4.	Static Stop	15.	Cotter Pin	26.	Control Tube
5.	Special Washer	16.	Bolt	27.	Key
6.	Nut	17.	Nut	28.	Pin
7.	Liner	18.	Washer	29.	Deleted
8.	Nut	19.	Pin	30.	Nut
9.	Washer	20.	Crosshead	31.	Washer
10.	Cotter Pin	21.	Knurled Nut	32.	Bolt
11.	Pitch Link	22.	Shim		

Figure 5-72. Tail Rotor Hub and Blade Assembly - Removal/Installation

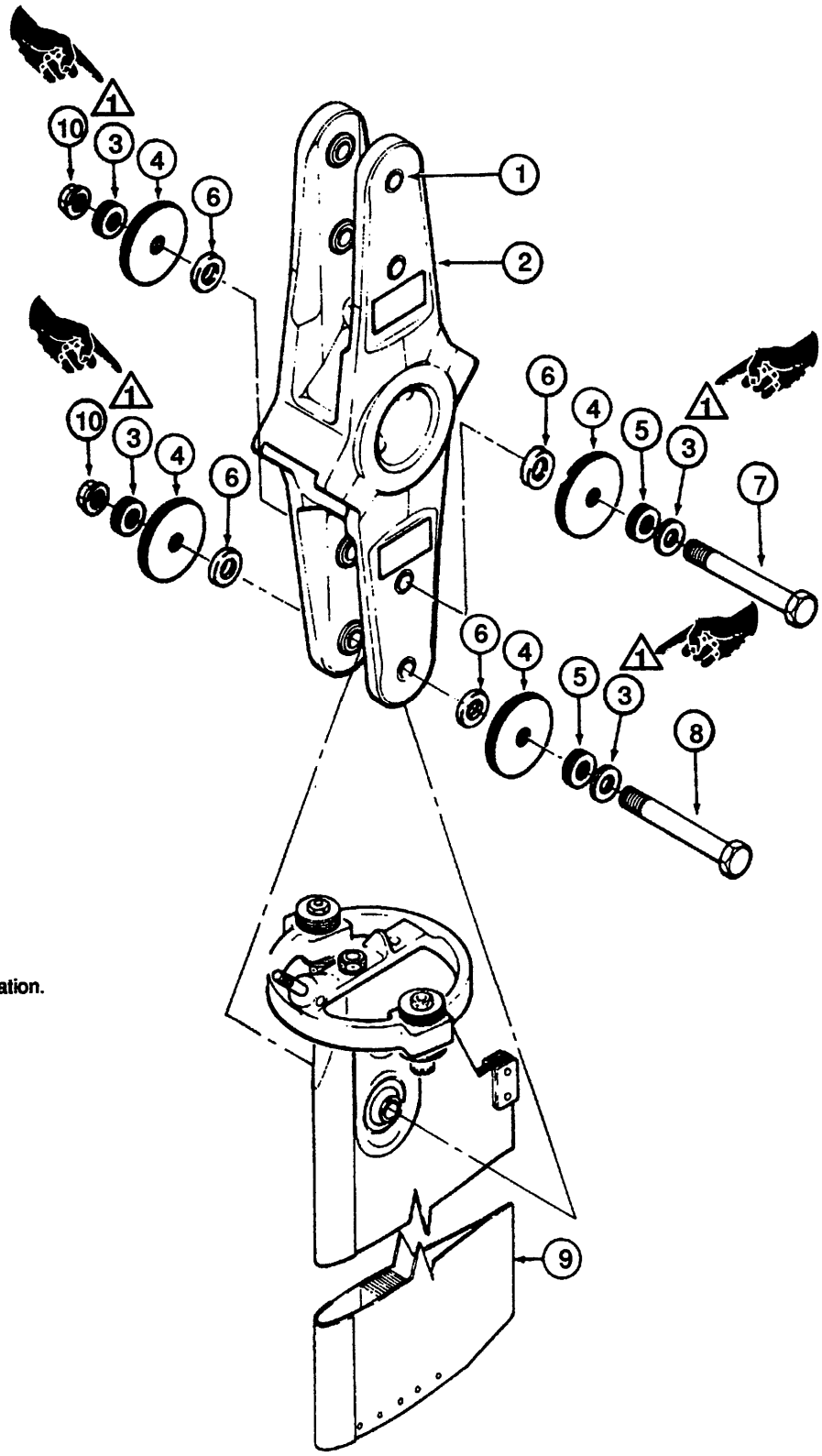

NOTE:

1 One in each location.

1. Bushing
2. Hub
3. Washer 1
4. Washer
5. Washer
6. Washer
7. Bolt
8. Bolt
9. Tail Rotor Blade
10. Nut

Figure 5-73. Tail Rotor Hub and Blade Assembly — Disassembly/Assembly (After compliance with MWO 55-1520-228-50-25)

1. Yoke
2. Bushing
3. Trunnion
4. Liner — inner
5. Shim
6. Thrust Plug
7. Seal
8. Bearing — Needle
9. Housing Assembly
10. Grease Fitting
11. Bolt (2 Reqd)
12. Washer — Steel (8 Maximum)
13. Weight (4 Maximum)
14. Insert
15. Data Plate

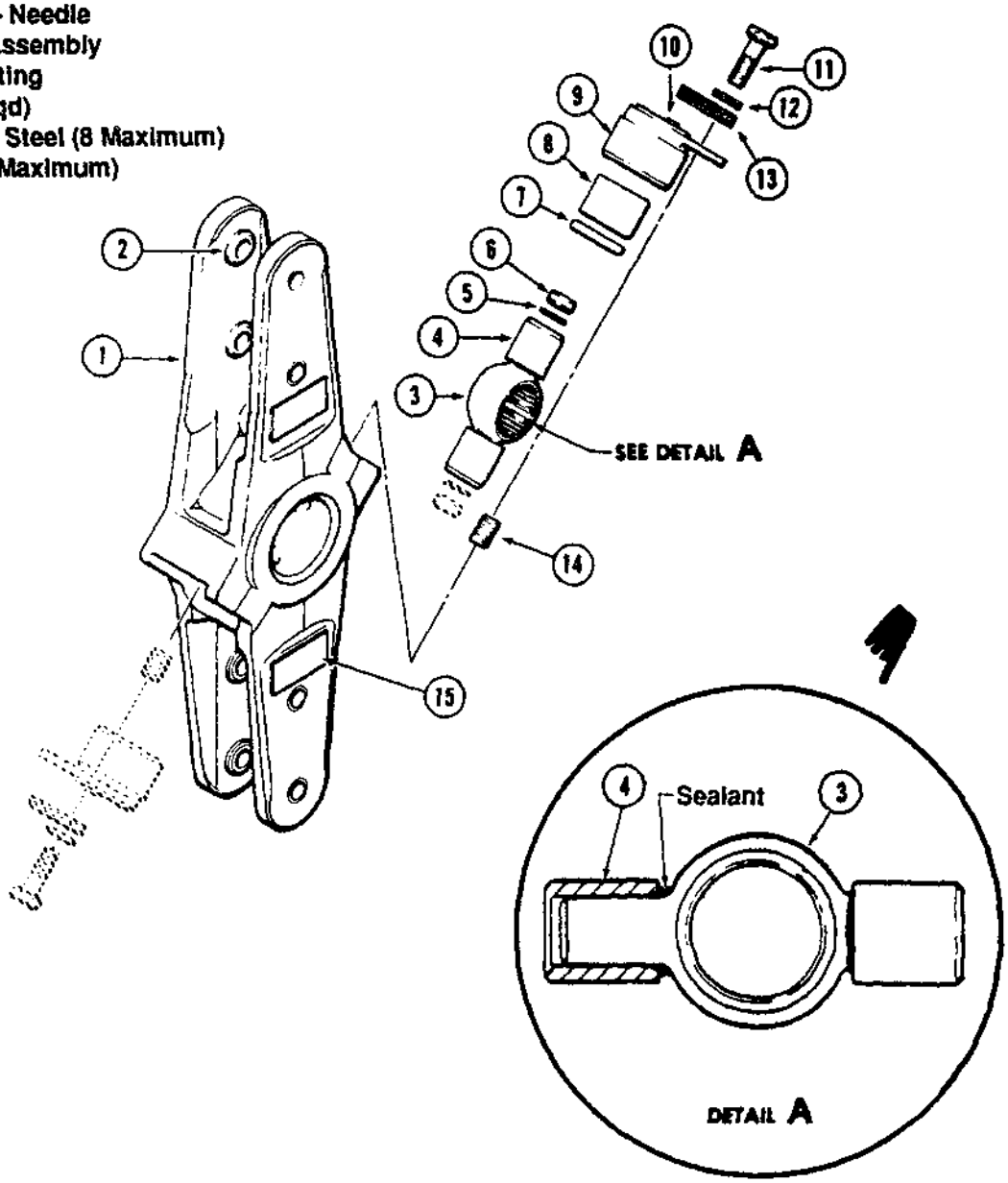

Figure 5-74. Hub Assembly — Disassembly/Assembly (After compliance with MWO 55-1520-228-50-25)

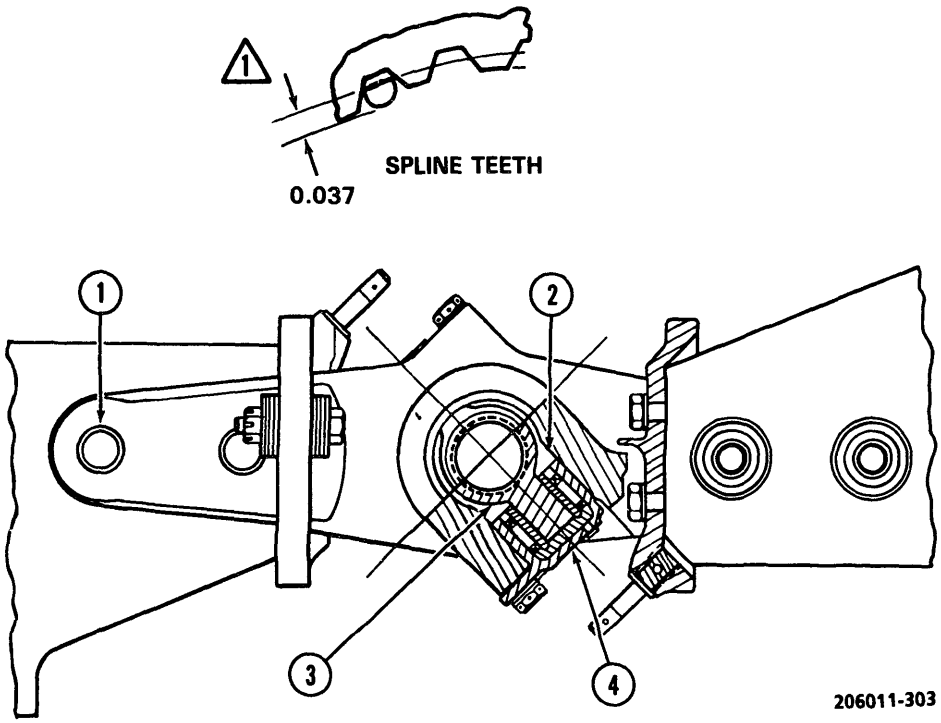

NO.	DESCRIPTION	LOCATION	MIN	MAX
1	Bushing	I.D.	0.375	0.377
2	Yoke - Housing Bore	I.D.	1.375	1.376
3	Trunnion - Splines	I.D.	0.952	0.954
	(Between 0.045 inch diameter pin	1		
4	Housing	I.D.	0.999	1.000
		O.D.	1.373	1.374

NOTES:

1 Use pins with one side ground flat to provide clearance between pins and root of spline teeth.

2 All dimensions are in inches.

Figure 5-75. Tail Rotor Hub Wear Limits

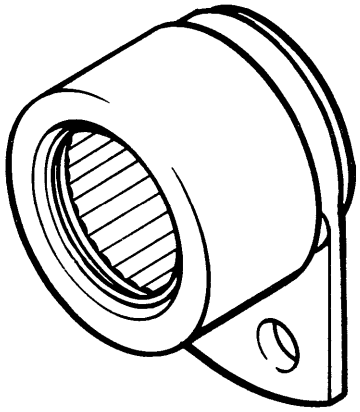

206-001-814
HOUSING

206011-304

TYPE OF DAMAGE	MAXIMUM DAMAGE AND REPAIR DEPTH (DAMAGE LOCATION SYMBOL)	
MECHANICAL	0.010 in. before and after repair	NONE
CORROSION	0.010 in. before and after repair	NONE
MAXIMUM AREA PER FULL DEPTH REPAIR	0.200 sq. in.	NONE
NUMBER OF REPAIRS	Not critical	NONE
EDGE CHAMFER	0.020 in.	N/A

Figure 5-76. Needle Bearing Housing Damage Limits

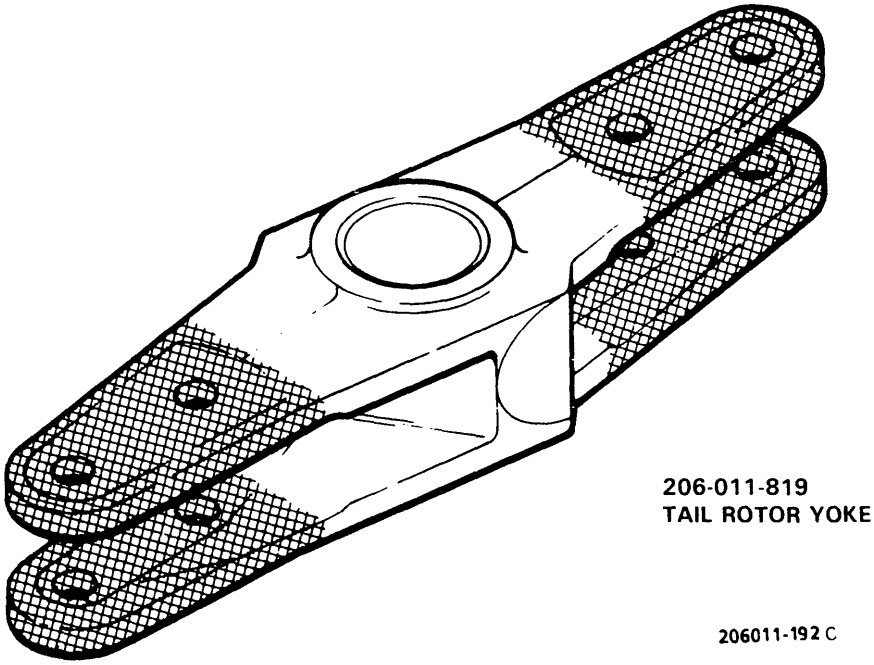

DAMAGE LOCATION SYMBOLS

TYPE OF DAMAGE	MAXIMUM DAMAGE AND REPAIR DEPTH	
MECHANICAL	0.005 in. before and after repair	0.005 in. before and after repair
CORROSION	0.005 in. before and after repair	0.005 in. before and after repair
MAXIMUM AREA PER FULL DEPTH REPAIR	0.250 sq. in.	0.500 sq. in.
NUMBER OF REPAIRS	One per tang	Not critical
EDGE CHAMFER	0.030 in.	0.060 in.
BUSHING	0.377 in. diameter maximum I.D.	
TRUNNION BORE	0.002 inch for 1/4 circumference	

Figure 5-77. Yoke Damage Limits

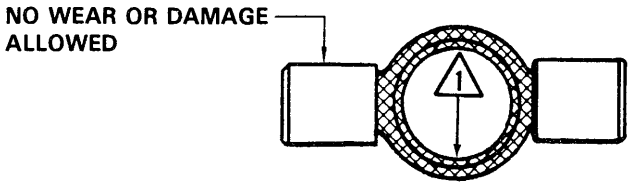

206-011-812
TRUNNION WITH SLEEVES INSTALLED

206011-305

DAMAGE LOCATION SYMBOL

TYPE OF DAMAGE	MAXIMUM DAMAGE AND REPAIR DEPTH	
MECHANICAL	0.005 in. before and after repair	None
CORROSION	0.005 in. before and after repair	None
SPLINES	Depth - 1/3 Length - 1/2 Number - 3	

NOTES:

1. Spline surfaces-nicks and scratches not exceeding 0.005 in. in depth and/or 10 percent of the surface area may be removed by polishing. No pitting allowed on splines.

Figure 5-78. Trunnion Damage Limits

f. Replace damaged or loose grease fitting (10, figure 5-74). Refer to paragraph 5-235, step a.

g. Replace loose or damaged data plate (15) as follows:

(1) Record data from damaged data plate. Stamp data on replacement data plate using 1/8-inch characters.

(2) Remove damaged data plate from yoke (1).

WARNING

Cleaning solvents are flammable and toxic. Use only in well-ventilated area. Avoid skin contact and inhalation of vapors. Do not direct compressed air near or directly against skin. Protect eyes with safety glasses.

(3) Clean area to be bonded.

WARNING

Acetone is extremely flammable and toxic to eyes, skin, and respiratory tract. Wear protective gloves and goggles/face shield. Avoid repeated or prolonged contact. Use only in well-ventilated areas (or use approved respirator as determined by local safety/industrial hygiene personnel). Keep away from open flames, sparks, hot surfaces or other sources of ignition.

(a) Remove old adhesive using a plastic scraper cheesecloth (C37) saturated with acetone (C2).

(b) Abrade area to be bonded, lightly using sandpaper (C124).

(c) Clean mating surface of replacement data plate (15) with cheesecloth (C37) saturated with naphtha (C22). Dry parts with cheesecloth.

(4) Mix adhesive (C11) 100 parts A to 22 parts B, using wooden paddle.

(5) Apply adhesive within **30** minutes after mixing, to mating surfaces of yoke (1) and data plate (15).

(6) Place data plate on yoke and fair out adhesive. Adhesive should extend approximately 1/16-inch past the edge of data plate on all sides. Edge voids are not permitted.

WARNING

Cleaning solvents are flammable and toxic. Use only in well-ventilated area, Avoid skin contact and inhalation of vapors. Do not direct compressed air near or directly against skin. Protect eyes with safety glasses.

WARNING

Acetone is extremely flammable and toxic to eyes, skin, and respiratory tract. Wear protective gloves and goggles/face shield. Avoid repeated or prolonged contact. Use only in well-ventilated areas (or use approved respirator as determined by local safety/industrial hygiene personnel). Keep away from open flames, sparks, hot surfaces or other sources of ignition.

(7) Remove excessive adhesive with cheesecloth (C37) moistened with acetone (C2).

(8) Apply firm contact pressure and cure adhesive for **24 to 72** hours at **70°F (21°C)** or **1** hour at **180°F (83°C)**.

5-235. ASSEMBLY — TAIL ROTOR HUB.

a. Press new grease fittings (10, figure 5-74) in housings (9), as required.

b. Install trunnion (3) in yoke (1) as follows:

(1) Insert trunnion (3) into yoke (1) and position shims (5) on end of trunnion with thrust plug (6). Apply corrosion preventive compound (C50) to faying surfaces of yoke and housing during final assembly. Install housings (9) into yoke (1) over inner liners (4) on trunnion (3). Use care not to damage seals (7). Loosely install bolts (11) and steel washers (12) to secure housings (9).

(2) Install fabricated trunnion center shaft (figure 5-79) into trunnion (3) and secure with washer and bolt.

(3) Establish a pinch fit on trunnion (3) by adding or subtracting shims (5) to obtain a **0.000** to **0.002** inch clearance between the underside of flange on housings (9) and mating surface on yoke (1). Shim both housings.

(4) Remove fabricated trunnion shaft from trunnion.

(5) Install weights (13), steel washers (12), and bolts (11) into yoke (1). Torque bolts **30 TO 40 INCH-POUNDS** and secure with lockwire (C96).

(6) Purge and lubricate needle bearings (8) at grease fittings (10) with grease (C77) until grease clears seals (7). Remove excess grease and wipe yoke clean with cloths.

c. Prime and paint hub as follows:

(1) Mask all bushings, splines, grease fittings, and data plate with masking tape (C143).

(2) Treat bare aluminum surfaces with chemical conversion coating (C38).

(3) Refinish with one coat of primer (C116) and two coats of acrylic lacquer (C91), color No. 36440. Remove masking tape.

5-236. ASSEMBLY — TAIL ROTOR HUB AND BLADES.

WARNING

Cleaning solvents are flammable and toxic. Use only in well-ventilated area. Avoid skin contact and inhalation of vapors. Protect eyes with safety glasses.

WARNING

Degreasing Solvent is combustible and toxic to eyes, skin, and respiratory tract. Wear protective gloves and goggles/face shield. Avoid repeated or prolonged contact. Use only in well-ventilated areas (or use approved respirator as determined by local safety/industrial hygiene personnel). Keep away from open flames or other sources of ignition.

a. Immediately prior to assembly, clean parts with degreasing solvent (C62) and hand-pack bearings with grease (C77). Ensure that bearings are dry prior to packing using dry filtered compressed air. Do not allow air pressure to exceed 15 psi. Do not handle or assemble parts which are not lubricated.

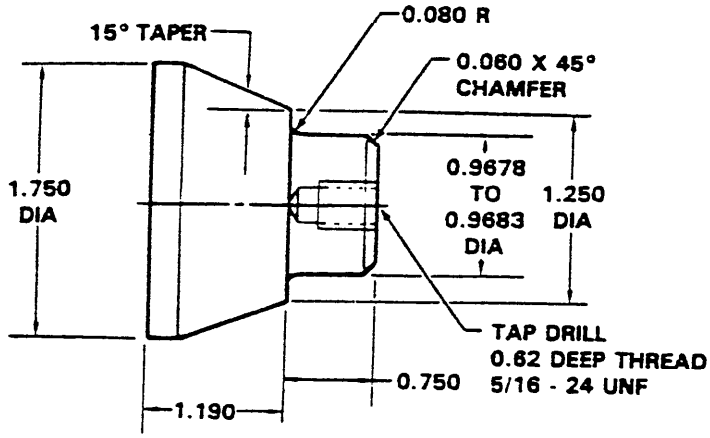

MATERIAL: 4130 Steel (MIL-S-6758).
AN5-4A Bolt and AN970-5 Washer.
Heat treatment or finish not required.

USE: For centering trunnion in yoke.

TRUNNION CENTERING SHAFT

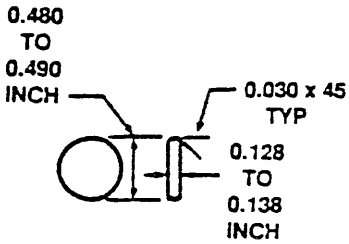

MATERIAL: 4130 STEEL (MIL-S-6758)

TRUNNION BEARING LINER PLUG FOR TAIL ROTOR HUB ASSEMBLY (206-011-810)

Figure 5-79. Work Aid — Trunnion Centering Shaft and Trunnion Bearing Liner Plug

CAUTION

Tail rotor blades must be installed as matched part number pairs only, (IAW para 5-227)

b. Identify tail rotor blades (9, figure 5-73) for correct positioning into hub (2). Also identify bolts (7 and 8), washers (3, 4, 5, and 6), and nuts (10) for correct positioning.

c. Position tail rotor blades (9) into tangs of hub (2) with stud of pitch horn adjacent to trunnion. Align bolt holes in bearings with bushings (1) in hub (2) at both ends.

NOTE

Ensure indexed parts and washers are reinstalled in original position to prevent change in spanwise balance. The four blade retention bolts may be installed from either side, but all four bolts must be installed from the same side.

d. Install two bolts (7 and 8) with one washer (6) under each bolt head adjacent to yoke and one under each nut (10). Additional washers (4, 5, and 3) to be installed at time of static balancing unless identical parts are being installed in their original positions.

e. If balancing is not required, torque nuts (10) **150 TO 175 INCH-POUNDS**.

NOTE

Balancing is required when tail rotor blades are changed, repaired, trunnion adjustment made, or other causes which may affect balance of the tail rotor hub and blade assembly.

f. Balance tail rotor blades. Refer to paragraph 5-238.

5-237. INSTALLATION — TAIL ROTOR HUB AND BLADE.

a. Install spacer (25, figure 5-72) against shoulder on tail rotor gearbox shaft.

CAUTION

Ensure that pin (28) goes through hole in key (27) and remains in position until tail rotor hub and blade (1) and static stop (4) are positioned on gearbox shaft.

b. Align pin hole in gearbox shaft with a slot in control tube (26) and hole in key (27). Install pin (28).

c. Align splines in gearbox shaft and tail rotor hub and blade. Install tail rotor hub on gearbox shaft with leading edge of top tail rotor blade facing aft as shown.

d. Install shim (2), static stop (4), special washer (5), and nut (6). Torque nut (6) **580 INCH-POUNDS**.

NOTE

Do not install rubber bumper (3) or bend special washer (5) until correct flapping angle and tailboom clearance have been obtained as outlined in following step e.

e. Adjust tail rotor hub and blade (1) for correct flapping angle as follows:

(1) Position tail rotor hub and blade (1) in vertical position and check flapping angle along pitch change axis. The pitch change axis is an extension of a line through the centers of the tail rotor blades to the attachment bolts.

(2) Flap tail rotor hub and blade (1) to one extreme position until tail rotor hub contacts static stop (4). Place protractor adjacent to blade attachment bolts; measure and record angle. Flap tail rotor hub and blade (1) to opposite extreme position until tail rotor hub contacts static stop (4); measure and record angle.

(3) The total flapping angle must be **18 to 19 degrees**. If angle is not correct, refer to step (4).

NOTE

If flapping angle is less than 18 degrees, use larger shim. If flapping angle is more than 19 degrees, peel off shim laminates.

(4) If necessary, to obtain **18 to 19** degrees flapping, adjust thickness of shim (2). Use only bonded laminates of shim (2). If a thicker shim is required, use a new shim. Laminates of shim are **0.002** inch.

f. After correct flapping angle has been achieved, accomplish the following:

(1) Remove nut (6), special washer (5), and static stop (4).

(2) Install rubber bumper (3), static stop (4), special washer (5), and nut (6). Insert lockwire (C96) into special washer (5), but do not tighten lockwire at this time.

(3) Torque nut (6) **580 INCH-POUNDS** and bend one edge of special washer (5) inboard over one flat of static stop (4). At another location, bend one edge of special washer (5) outboard over two flats of nut (6). Refer to detail A.

CAUTION

Exceeding torque of **50 INCH-POUNDS** will strip the thread in the balance wheel.

g. Thread balance wheel (23) onto tail rotor gearbox shaft against nut (6). Torque balance wheel to a maximum of **50 INCH-POUNDS**.

CAUTION

Use only knurled nut, P/N 206-010-759-3 (0.875 inch overall length), on helicopters with the balance wheel.

h. Install liner (7) and knurled nut (21). Hand tighten nut onto gearbox shaft. Adjust shim (22) clearance as follows:

(1) Measure the clearance between balance wheel (23) and knurled nut (21). Record measured clearance.

(2) Adjust thickness of shim (22) to equal measured clearance to within **0.002** inch. Shims (22) are **0.002** inch laminates with total thickness of **0.032** inch. Do not exceed a maximum of 10 shims.

(3) Install measured shims (22), liner (7), and knurled nut (21). Tighten knurled nut (21) hand-tight only on gearbox shaft.

i. Install pin (19) in outboard end of control tube (26) and install crosshead (20) over control tube and pin. Check for proper location of pin (19) by inserting a piece of lockwire into groove at back of crosshead (20).

j. Install washer (18) and nut (17) on outboard end of control tube (26). Torque for nut (17) will be drag torque plus **125 INCH-POUNDS**.

k. Install pitch links (11) between crosshead (20) and studs on pitch horns (24), as follows:

(1) Connect pitch links (11) to pitch horns (24) with thin washers (12), cupped washers (13), and nuts (14). Torque nuts (14) **50 TO 60 INCH- POUNDS**.

(1) Connect pitch links (11) to crosshead (20) with bolts (16) (heads in direction of rotation), washers (9), and nuts (8). Position washers under head of bolts and under nuts. Torque nut (8) **80 TO 100 INCH-POUNDS**. Install cotter pin (10).

l. Check pitch change mechanism for freedom of movement with pedals through full operating range.

m. Check tail rotor hub and blades (1) for freedom of movement at flapping axis. Check tail rotor blade bearings for freedom of movement.

n. Check rigging of antitorque control system Refer to Chapter 11.

o. Check tail rotor hub and blade for correct tailboom clearance as follows:

(1) Turn tail rotor hub and blade (1) to position one blade tip adjacent to tailboom. Hold right tail rotor pedal full forward against stop. Flap tail rotor hub and blade (1) toward tailboom until tail rotor hub contacts static stop (4).

(2) The trailing edge of the tail rotor blade must clear tailboom at closest point by at least **1.500** inch

(3) If clearance is not within tolerance accomplish following steps:

(a) Remove items installed in steps f. through k.

(b) Accomplish procedures specified in step e.(1) through e.(3). Adjust shim to minimum 18 degree flap.

(c) Install items specified in steps f. through k.

(d) Accomplish preceding steps o. (1) through o. (3).

p. Secure knurled nut (21) to balance wheel (23) and then secure balance wheel to special washer (5) with lockwire (C96). Refer to detail B.

q. Install cotter pins (10 and 15).

r. Balance tail rotor hub and blade assembly. (Reference AVA TM 1-6625-724-13&P).

5-238. BALANCING — TAIL ROTOR HUB AND BLADE ASSEMBLY.

Premaintenance Requirement for Tail Rotor Hub and Blade Assembly

Condition	Requirements
Model	OH-58A and OH-58C
Part No. or Serial No.	All
Special Tools	(T41) (T42) (T39)
Test Equipment	None
Support Equipment	None
Minimum Personnel Required	One
Consumable Materials	(C96)
Special Environmental Conditions	None

a. Set up tool (T41), (T42), and (T39) to accomplish balance procedure in accordance with TM 55-4920-201-14.

b. Prior to balancing of tail rotor, ensure washers (31, figure 5-72) are installed on pitch horn (24).

NOTE

Washers (23) are used as counterweights to compensate aerodynamic pitch forces, do not add or remove washers to achieve balance. Reference Chapter 11, for balance forces - Tail Rotor Control.

c. Balance tail rotor hub and blades chordwise as follows:

(1) Use combinations of weights (13, figure 5-74) and washers (12) as necessary to obtain chordwise balance.

NOTE

Adjustment of chordwise balance will also affect spanwise balance. If necessary, temporarily place washers on yoke to balance spanwise so accurate chordwise readings may be obtained.

(2) Remove bolts (11) from housing (9) and yoke (1) of tail rotor hub and install weight and/or washer combinations under boltheads until chordwise balance is achieved.

NOTE

Ensure at least one washer (12) remains under head of each bolt (11) after balancing is achieved.

(3) Use NAS6606H2 through NAS6606H8 bolts (11) as required to secure weight/washer combinations. Ensure a minimum of **0.250** inch thread engagement of bolt.

(4) Torque bolts (11) **30 TO 40 INCH-POUNDS** and secure with lockwire (C96) after tail rotor hub and blades are removed from balance tools.

d. Balance tail rotor hub and blades spanwise as follows:

CAUTION

Washer series AN960 and bolts NAS 6606-31 through NAS 6606-34 are authorized for all locations. Washer AN 970-6 and bolt NAS 1306-36, are authorized for outboard locations. The NAS 1306-36 bolt may contact washer stack-up on pitch horn if used on inboard locations but may be used provided that there is adequate clearance. A maximum of four washers is authorized for inboard locations (2 under nut and two under bolt head, or one under nut and three under bolt head). A maximum of six washers is authorized at outboard locations. At least one full round of bolt thread shall be exposed beyond nut. Use minimum length bolt required to ensure that only the threaded portion of bolt shank is exposed.

(1) Balance assembly spanwise by using combinations of AN960-616 (3, figure 5-73), AN960-616L (5), AN 970-6 (4), and MS9482-12 (6), washers on tail rotor blade bolts. As a minimum, one MS9482-12 (6) washer must be used under head of each bolt and nut. Use NAS6606-34 or NAS6606-36 bolt (7) and NAS6606-34, NAS6606-36, NAS6606-38, or NAS6606-40 bolt (8) as required to accommodate washer combinations.

(2) Torque nuts (10) on blade bolts (7 and 8) **150 TO 175 INCH-POUNDS**.

NOTE

Do not rotate trunnion 180 degrees after static balance procedures. Balance and trunnion centering will likely not be the same due to manufacturing tolerances of trunnion.

SECTION VII. TAIL ROTOR BLADES

5-239. TAIL ROTOR BLADES. (Prior to compliance with MWO 55-1520-228-50-25).

NOTE

Refer to paragraph 5-248 if MWO 55-1520-228-50-25 has been complied with.

5-240. DESCRIPTION - TAIL ROTOR BLADES. The tail rotor blades are constructed of aluminum alloy and are mounted in the tail rotor yoke assembly by means of spherical bearings. The bearings permit pitch change of the blades.

Premaintenance Requirements for Tail Rotor Hub and Blade Assembly

Condition	Requirements
Model	OH-58A and OH-58C
Part No. or Serial No.	All
Special Tools	(T23) (T24) (T25) (T26)
Test Equipment	Fluorescent Penetrants Method Bond Test Unit
Support Equipment	Spray paint equipment
Minimum Personnel Required	Two
Consumable Materials	(C2) (C13) (C19) (C21) (C22) (C38) (C39) (C45) (C51) (C54) (C61) (C69) (C88) (C90) (C92) (C93) (C116) (C120) (C123) (C124) (C126)(C127) (C128) (C143)
Special Environmental Conditions	None
References	TM 1-1520-254-23

5-241. CLEANING — TAIL ROTOR BLADES. To maintain a protective coating when operating in humid salt laden air, clean blades with a hurrisafe 8065 (C54) cleaner, and dry with clean cloth. Apply an even coat of nonsilicone wax. Do not polish.

5-242. INSPECTION — ACCEPTANCE/REJECTION CRITERIA — TAIL ROTOR BLADES.

CAUTION

Tail rotor blade tips will be inspected for corrosion around rivets; tip blocks will be inspected for cracks and/or debonding.

NOTE

Any damage in excess of that noted is cause for blade replacement. Refer to figure 5-80 for repair limits.

a. Skin — inboard of station 23.0. Inspect for nicks, scratches, and dents as follows:

(1) Nicks and scratches running within **0 to 15** degrees of the spanline are not to be in excess of **0.006** inch depth and shall be polished out.

(2) All other nicks and scratches are not to be in excess of **0.004** inch depth and **1.000** inch long and shall be polished out.

(3) Sharp dents which do not break the skin or remove metal from the blade and are not in excess of **0.010** inch depth and **0.500** square inch in area are permissible.

(4) Nonsharp dents which are not in excess of **0.030** inch depth and **0.200** square inch in area are permissible.

b. Skin — outboard of station 23.0. Inspect for nicks, scratches, and dents as follows:

(1) All nicks and scratches are not to be in excess of **0.010** inch deep and shall be polished out.

(2) Sharp dents which do not break the skin or remove metal from the blade, and are not in excess of **0.030** inch depth and **0.200** square inch in area are permissible.

(3) Nonsharp dents not in excess of **0.060** inch in depth and **1.000** square inch in area are permissible.

CAUTION

Dents should be inspected closely for nicks, scratches, and cracks. Nicks or scratches in dents in excess of limits listed above are cause for blade replacement.

c. Inspection of tail rotor blades for cracks. If a crack in the tail rotor blade is suspected, refer to TM 1-1520-254-23, Technical Manual Aviation Unit Maintenance (AVUM) and Aviation Intermediate Maintenance (AVIM) Manual Nondestructive Inspection Procedures for OH-58 Helicopter Series.

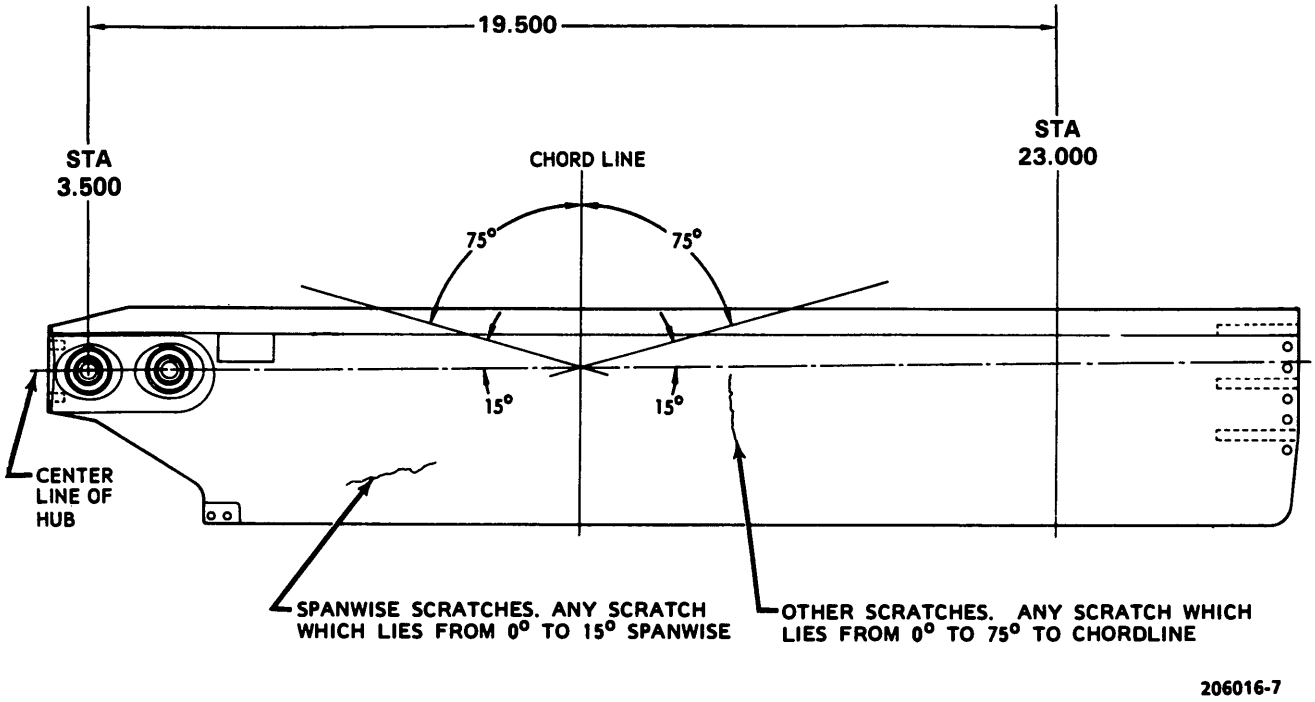

Figure 5-80. Repair — Tail Rotor Blade

NOTE

Cracks are not acceptable on the tail rotor blade. Any crack is cause for blade replacement.

(1) Visually inspect entire blade for cracks.

(2) Inspect both sides of blade in an area approximately **7.000** inches outboard from butt end and **1.500** inches aft of the leading edge. Blades with serial number TLL-8000 and below must be subjected to very critical inspection using 10-power magnification in this area, with complete evaluation of any paint cracks.

WARNING

Acetone is extremely flammable and toxic to eyes, skin, and respiratory tract. Wear protective gloves and goggles/face shield. Avoid repeated or prolonged contact. Use only in well-ventilated areas (or use approved respirator as determined by local safety/industrial hygiene personnel). Keep away from open flames, sparks, hot surfaces or other sources of ignition.

CAUTION

Do not use chemical strippers on blades.

Do not attempt to strip entire blade. This procedure is intended only for small areas of suspected cracks and for the critical area defined in (2), above. Where the critical area has been left clear for inspection, do not use abrasive.

Do not strip protective primer undercoating from blades.

NOTE

Blades with serial numbers starting with TLW are considered above serial number TLL-8000.

(3) If cracks are found which may be paint cracks, remove outer layers of paint with acetone (C2) and/or 180 to 400 grit sandpaper (C124, C125, and C126). All sanding must be done in a spanwise

direction only. Remove outer (color) layer of paint only. Do not attempt to remove primer coatings (yellow layers). Evaluate cracks to determine if further work is required. If cracks are still suspected or if cracks are evident in the primer coating in the critical area defined in preceding step (2), or if primer coatings are removed to expose metal, request assistance from AVIM.

d. Inspection for cracks in critical area (AVIM). If a crack in the tail rotor blade is suspected, refer to TM 1-1520-254-23, Technical Manual Aviation Unit Maintenance (AVUM) and Aviation Intermediate Maintenance (AVIM) Manual Nondestructive Inspection Procedures for OH-58 Helicopter Series.

(1) Suspected cracks which may be only paint cracks and cracks which extend through the primer coatings in a critical area **7.000** inches outboard from the butt end and **1.500** inches aft of the leading edge may be evaluated by removing all paint coatings in the suspected area.

(2) Blade primer coatings are resistant to chemical removal and the blade adhesive bonds may be damaged by removers. Remove primer by sanding in a spanwise direction only, using 180 to 400 grit sandpaper (C124, C125, and C126). Top coatings may be removed using the coarser grades of abrasive. Succeeding layers near the metal surface must be removed with finer grades. If possible, do not remove chemical film treatment (light grey or clear) from the blade skin. Do not remove any material from the blade skin.

(3) After removal of paint coatings, inspect area to determine if the suspected cracks are in the metal. Use 10-power magnification and/or dye penetrant or fluorescent penetrant. Refer to TM 55-1500-335-23.

(4) Reject all cracked blades.

(5) Treat all bare metal surfaces of serviceable blades with chemical film (038). See paragraph 5-247.

(6) On blades with serial number TLL-800 and below, to aid in subsequent inspection, do not apply color coats and primer to a **2**-inch diameter area centered **7.000** inches outboard of the butt end and **1.500** inches aft of the leading edge on both sides. To prevent corrosion, paint this area with clear lacquer (C90).

(7) Touch up all other areas. See paragraph 5-247.

e. Trailing edge. Scratches, nicks, or dents in the trailing edge should be inspected to the same limits as the same damage to the skin.

f. Abrasive strip.

NOTE

If the abrasive strip is worn or cut through, ripped or has been displaced, the blade should be replaced.

(1) Dents in the abrasive strip inboard of station 13.0 in excess of **0.006** inch are not acceptable at the extreme leading edge radius.

(2) Other dents in the abrasive strip should be inspected to the same limits as dents in the skin.

g. Voids under abrasive strip. Voids are not allowed within **0.250** inch of trailing edge and **0.500** inch of inboard and outboard ends of the abrasive strip except as allowed in following steps h. and i. below. Not more than **15%** of all remaining areas of the abrasive strip shall be void. If void damage under the abrasive strip is suspected, refer to TM 1-1520-254-23, Technical Manual Aviation Unit Maintenance (AVUM) and Aviation Intermediate Maintenance (AVIM) Manual Nondestructive Inspection Procedures for OH-58 Helicopter Series.

h. Voids at the trailing edge of the shell. A void of **0.120** inch maximum side (chordwise) or a minimum of **0.380** inch wide (chordwise) of solid bond is allowed. There shall be no edge voids. If void damage at the trailing edge of shell is suspected, refer to TM 1-1520-254-23, Technical Manual Aviation Unit Maintenance (AVUM) and Aviation Intermediate Maintenance (AVIM) Manual Nondestructive Inspection Procedures for OH-58 Helicopter Series.

i. Voids between the shell and the root end retention block. If void damage between shell and retention block is suspected, refer to TM 1-1520-254-23, Technical Manual Aviation Unit Maintenance (AVUM) and Aviation Intermediate Maintenance (AVIM) Manual Nondestructive Inspection Procedures for OH-58 Helicopter Series.

(1) A void **0.250** inch wide (maximum) at the leading edge is acceptable provided it is sealed. The aft edge of the void must be within **0.150** inch of extreme leading edge of the blade.

(2) A void (or gap) **0.120** inch wide (chordwise) between the shell and retention block at the trailing edge is acceptable provided it is sealed.

(3) Edge voids are not allowed between the shell and the retention block except as specified substeps (1) and (2) of this paragraph.

j. Voids between the shell and tip block. If void damage between shell and tip block is suspected, refer to TM 1-1520-254-23, Technical Manual Aviation Unit Maintenance (AVUM) and Aviation Intermediate Maintenance (AVIM) Manual Nondestructive Inspection Procedures for OH-58 Helicopter Series.

(1) A void **0.250** inch wide at the leading edge is acceptable provided it is sealed. The aft edge of the void must be within **0.015** inch of the extreme leading edge of the blade.

(2) A void (or gap) **0.120** inch wide (chordwise) between the shell and the tip block at the trailing edge is acceptable provided it is sealed.

5-243. REMOVAL — TAIL ROTOR BLADES.

NOTE

Hub assembly must be removed from helicopter prior to blade replacement.

a. Index blades as to which side of yoke they are installed in. Ensure that each of the blade retention bolts, nuts, and washers are identified so they can be reinstalled in original positions to prevent change in spanwise balance.

b. Remove two blade-to-yoke bolts (1, figure 5-60) and remove blade from yoke. Remove opposite blade in same manner.

NOTE

If tail rotor blade is to be replaced, remove the pitch horn and reinstall on the new blade.

5-244. INSPECTION — TAIL ROTOR BLADE BEARINGS. Inspect tail rotor blade bearings for axial and radial play. Axial play must not exceed **0.010** inch. Radial play must not exceed **0.006** inch.

5-245. REPAIR — TAIL ROTOR BLADE BEARINGS. (AVIM)

a. Remove blade from hub.

b. Remove tail rotor blade bearings as follows:

(1) Place bearing over a suitable support. (See detail A, figure 5-81.)

(2) Press bearing and sleeve from blade using punch (T23) and pilot (T24).

(3) Inspect hole in blade for nicks or scratches. Nicks or scratches not exceeding **0.003** inch in depth are acceptable if polished out to original surface finish.

(4) Strip paint locally around bearing holes and apply chemical film (C38) to bare metal.

(5) Determine bearing location.

NOTE

The following procedure is required to ensure that bearings are properly installed in relation to the chord line. Perform the following inspection with blade identification plate facing up.

(6) Position two supports (T25) on a level surface table. Position the blade holes over the supports (T25) and clamp blades to table. (See detail B of figure 5-81.) Use light pressure on clamp so as not to deflect the blade.

(7) Mount a dial indicator on a height gage. Measure the height at the high point of blade contour at two locations; **0.500** inch and **22.500** inches from blade tip. Ensure that blade is not defective at the **0.500** inch reading. Record readings and location at which reading was taken.

(8) Subtract the two readings; then divide by 11. This is the quantity of shims (T26) required for use in tool (T20) for bearing location.

NOTE

If the tip of the blade is lower than the root end, the shims will be used for installing the inboard bearing. If the blade tip is higher than the root end, the shim will be used for locating the outboard bearing.

(9) Remove clamp tool from blade.

c. Install new bearings and sleeves as follows:

CAUTION

Sleeve and bearing should be inserted by hand pressure only. Freedom of movement is essential for proper sleeve and bearing location. If required, the sleeve may be sanded lightly to obtain a slip fit.

NOTE

Only bearings of the same part number are to be installed in any one blade.

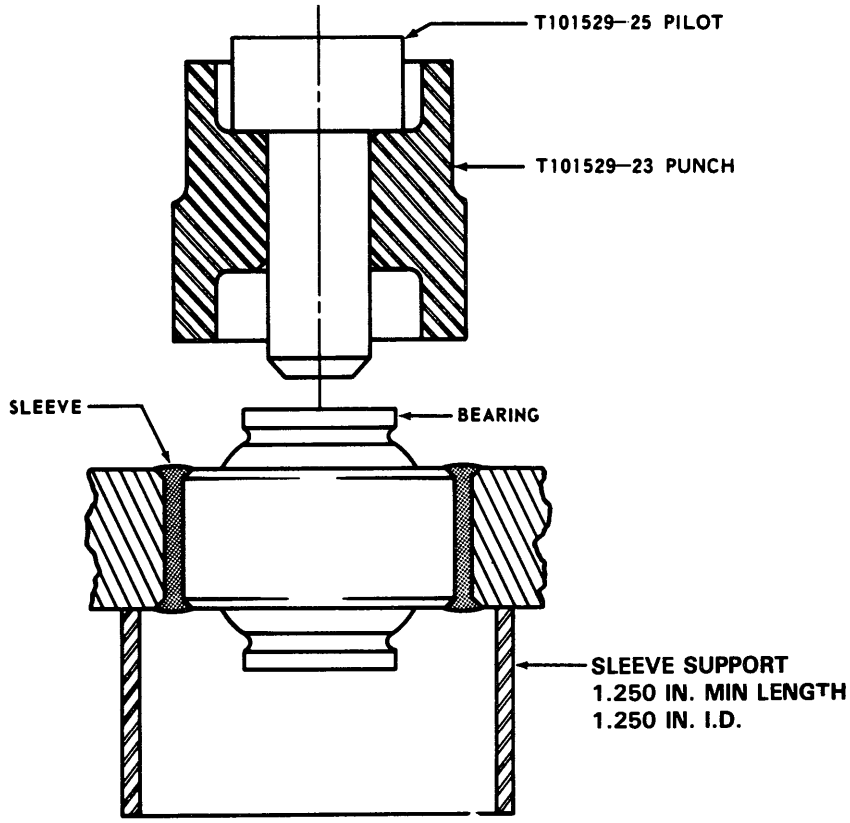

DETAIL A BEARING REMOVAL

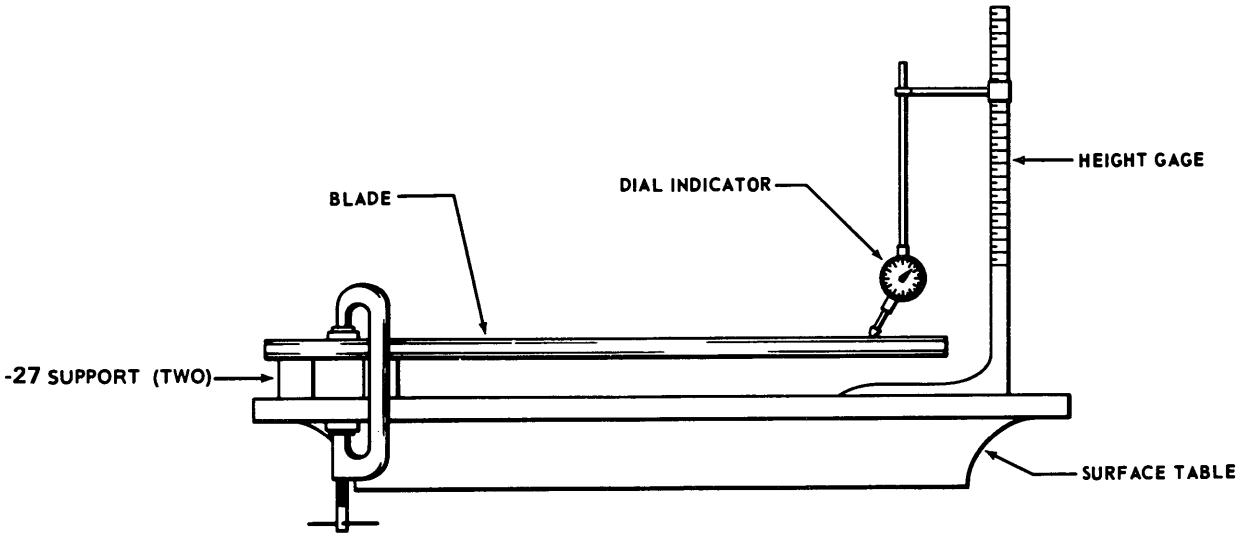

DETAIL B DETERMINING BEARING LOCATION

206011-307-1

Figure 5-81. Replacement — Tail Rotor Blade Bearing (Sheet 1 of 2)

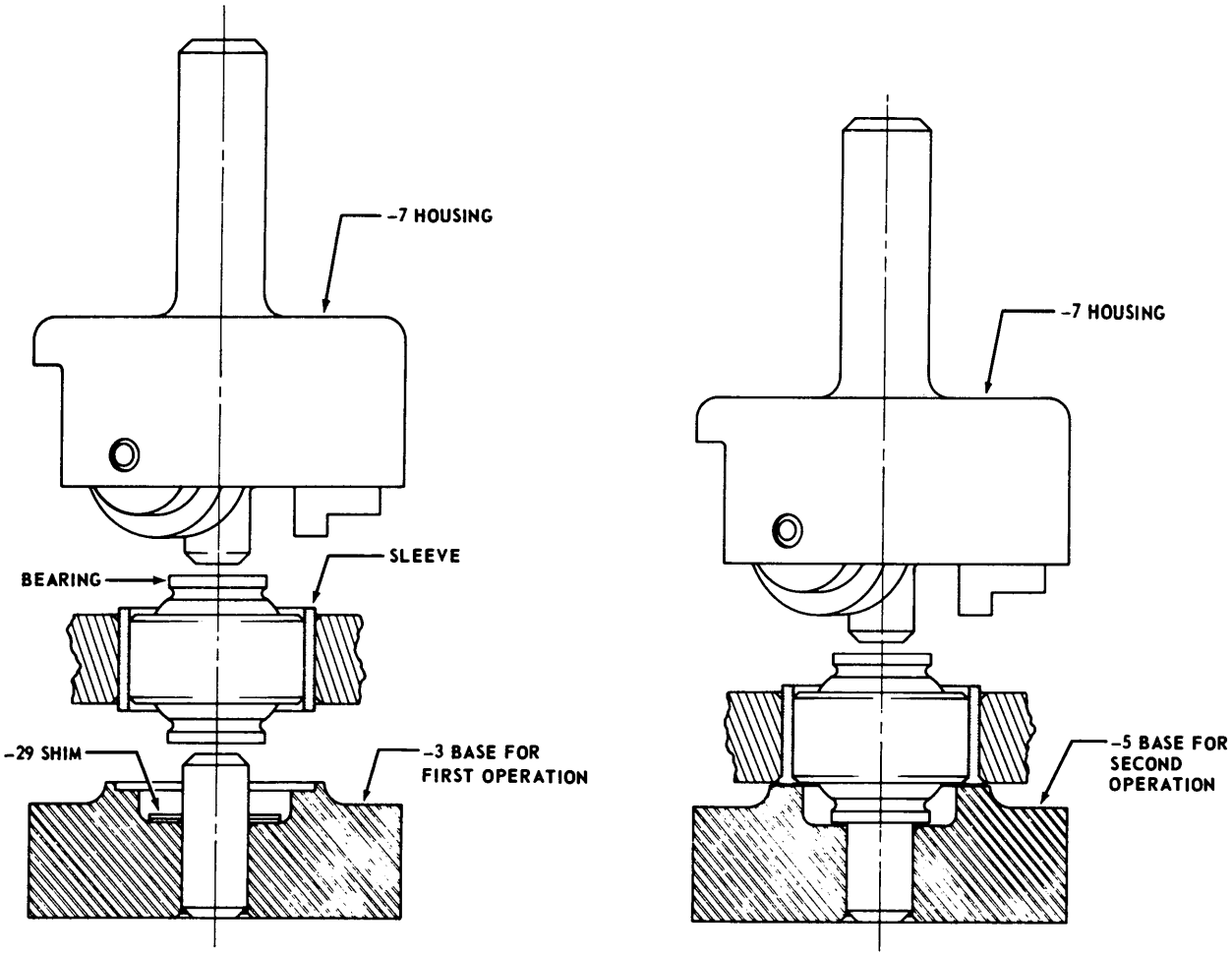

DETAIL C BEARING INSTALLATION

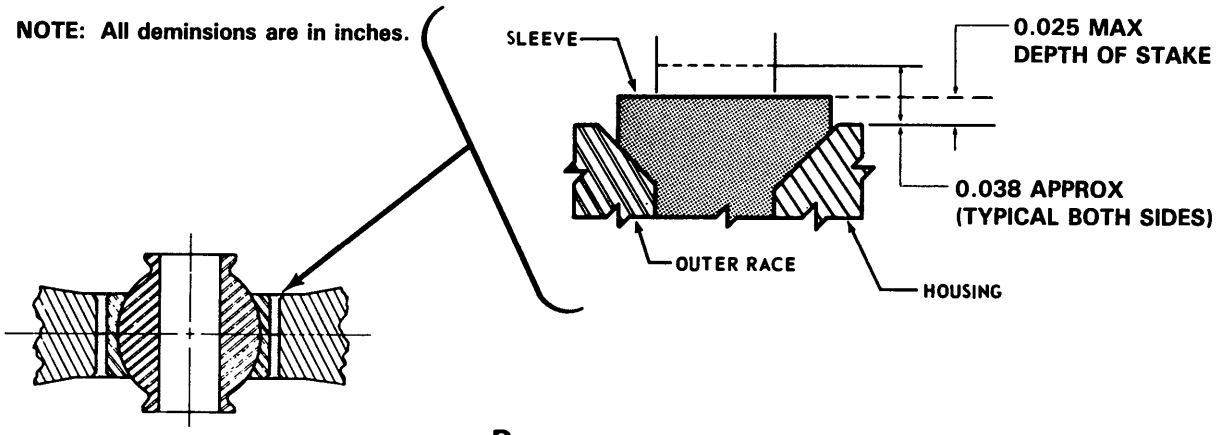

DETAIL D STAKING REQUIREMENTS

206011-307-2

Figure 5-81. Replacement — Tail Rotor Blade Bearing (Sheet 2 of 2)

(1) Sand sleeve I.D. with sandpaper (C126). Remove grit residue and apply a coat of unreduced zinc chromate primer (C118) to the blade hole. Install sleeve in blade.

CAUTION

Retaining compound will pick up contamination and it is mandatory that the compound be kept out of the bearing. Staking of the bearing sleeve shall be performed within 30 minutes after compound application.

(2) Using a cotton swab soaked in retaining compound (C120) apply a generous amount to sleeve I.D. and bearing race O.D. Install bearing in sleeve.

(3) Carefully wipe off excess compound to prevent spread to other surfaces.

(4) Install correct quantity of (T26) shims in base.

NOTE

If shims are used for bearing location, ensure that bearing and sleeve are installed in the correct hole to compensate for a low or high blade tip.

(5) Install housing in a drill press. Set speed for **250** to **350** rpm. Position base under housing.

(6) Position blade on the base assembly with identification plate facing up. Ensure that blade is seated level on the base. Align bearing bore with pilot pin and roller-stake the sleeve (one side only). Apply rollers of tool to sleeve in about **10**-second increments. After each **10**-second increment, inspect for correct displacement of sleeve into chamfered edges of bearing race and housing. Refer to figure 5-81, detail D.

(7) Remove the base and position the base assembly (T21) under the housing. Position the bearing over the base (staked end next to base) and roller-stake the sleeve.

(8) Install sleeve and bearing in the outer blade hole, following substeps (1) through (7).

(9) Inspect each end of staked sleeves for proper staking.

(10) Check staking dimensional requirement shown in detail D, figure 5-81.

(11) Ensure that chamfer on bearing outer race and blade bore is completely filled with staked sleeve.

(12) Check for looseness of the bearing to sleeve and sleeve to blade. No looseness is permitted.

(13) Check for overstaking. Insert a 6-inch bar or tube in bearing. Attach pull scale to end of tube and move bearing inner race. Force required to move bearing shall not exceed a 1-pound pull.

(14) If force required to move bearing exceeds one-pound pull, the bearing may be burnished by spinning at **60 to 100** rpm for one to two minute periods until a satisfactory pull force is obtained. Do not allow bearing to overheat.

d. Check bearing alignment as follows:

(1) Clamp blade to a level surface. Check to ensure that bearing ends are parallel to surface table.

(2) Install two bolts in the two threaded holes located in the blade root end. Place a bubble protractor on the bolt and level blade chordwise.

(3) With dial indicator installed on a height gage, measure the high point of contour at **0.500** inch and **22.500** inches from the tip of the blade. Subtract the two readings and record the result.

(4) Turn blade over and repeat substeps (1), (2), and (3).

(5) Add the two readings found in steps (3) and (4), and divide by two. Then divide this result by 11. If the final number is greater than **0.008** inch, bearings should be reinstalled in accordance with steps b. through d. with new sleeves.

5-246. INSTALLATION — TAIL ROTOR BLADES.

WARNING

Inspect all tail rotor blades, including new blades, for cracks prior to installation.

NOTE

As an aid to blade installation, a work aid may be fabricated per figure 5-82 from 0.020 inch aluminum alloy sheet to hold the bearings in alignment.

NOTE

Due to manufacturing processes the tail rotor yoke tangs may be arched open or closed slightly and still be acceptable. If they are closed, they may be opened to accept the blade by inserting a smooth rounded end 0.375-inch diameter rod into each outboard bushing. Apply sufficient force to open the tangs wide enough to accept the blade.

a. Prior to installing blade into yoke apply corrosion preventive compound (C51) to inner race I.D. of bearings (20). If not previously accomplished, install pitch horn assembly, then position rotor blade in yoke (8, figure 5-60) with pitch horn adjacent to trunnion. Refer to paragraph 5-226.

b. Install two bolts (1), washers (2, 3, 4, and 5) and nuts (6). Torque nuts **140 TO 160 INCH-POUNDS**.

NOTE

c. Check feathering action of tail rotor blade in the yoke. Force required to move the blade shall not exceed **2**-pounds pull on a **6**-inch arm from centerline of bearings. If more, check for bearing and hub alignment, out of round bolts, and deformed yokes.

d. Look for interference between pitch horn tangs (ears), balance weights, and yoke assembly. Pitch horn ring bar must contact chamfered inner surface of yoke assembly, either at forward or aft surface of blade assembly. Pitch horn ring bar must not first contact radius at end of machined surface.

5-247. PAINTING — TAIL ROTOR BLADES.

a. Lightly sand the paint around polished areas using sandpaper (C126).

b. Mask off bearings and the inboard **1/8**-inch of blade.

c. Brush bare areas with chemical conversion coating (C38) or keep bare areas wet with 10% solution of chromic acid (C39) for five minutes.

d. Rinse with clean water and check for a smooth unbroken surface film of water. If water breaks, dry, clean, and reapply chemical conversion coating.

e. Apply one light coat of primer (C116) and allow to air dry for 30 minutes. Spray only those areas which are being refinished.

NOTE

If primer is allowed to dry longer than two hours, finish coat of lacquer will not adhere.

f. Apply a coat of acrylic lacquer (C92) or (C93) color to match surrounding paint.

g. Remove masking from bearings and blade.

h. If a fast paint cure is desired, air dry for one hour followed by oven dry for one hour at **180° to 190°F (82° to 88°C)**.

5-248. TAIL ROTOR BLADES (AFTER COMPLIANCE WITH MWO 55-1520-228-50-25.)

5-249. DESCRIPTION — TAIL ROTOR BLADES. The tail rotor blades are all metal assemblies consisting of a stainless steel shell reinforced by a honeycomb filler and stainless steel leading edge abrasive strip. Two spherical bearings are installed in an aluminum alloy retention block to provide for pitch change movement of the blades in the tail rotor hub. The improved tail rotor blades are **1.500** inches longer than previous aluminum blades to provide increased tail rotor thrust.

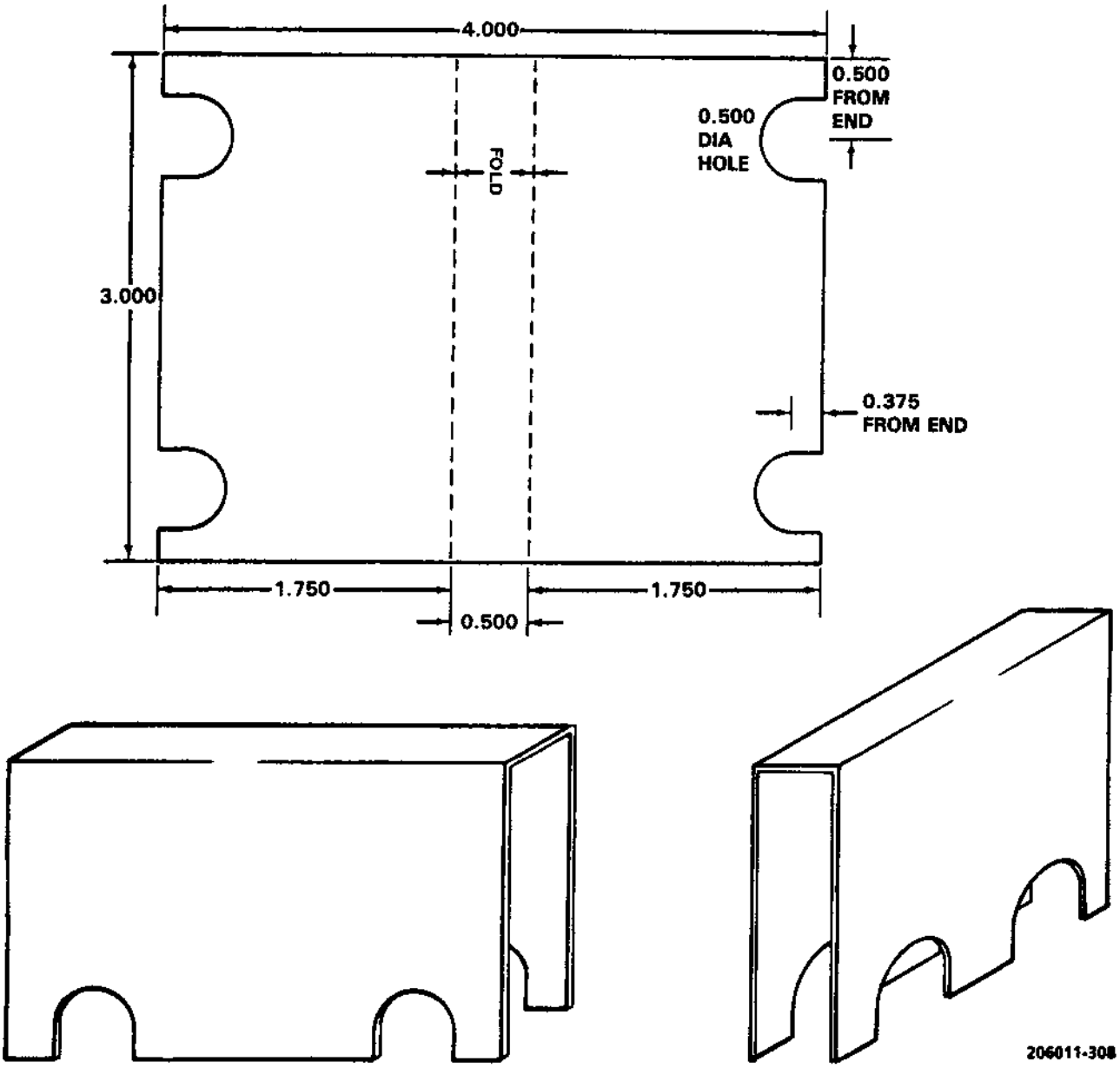

FABRICATION INSTRUCTIONS:

1. Punch marks for the cutout holes are punched 0.375 from the bottom and 0.500 from the side. After the holes are cut, file bottoms of holes.
2. To fabricate aid, use 0.020 inch aluminum alloy sheet.
3. All dimensions are in inches.

Figure 5-82. Work Aid — Tail Rotor Blade Installation

5-250. CLEANING — TAIL ROTOR BLADES. The following cleaning procedures should be accomplished each week, or more frequently if deemed necessary, to prevent corrosion and extend tail rotor blade service life.

WARNING

Cleaning solvents are flammable and toxic. Use only in well-ventilated area. Avoid skin contact and inhalation of vapors. Protect eyes with safety glasses.

a. Wipe tail rotor blades clean with naphtha (C22) or solvent (C51).

b. Wash tail rotor blades with Hurrisafe 8065 (C54), MIL-PRF-85570, TYPE II (C74) or MIL-PRF-87937, TYPE II (C67) or TYPE IV (C68) cleaner. Rinse with clean water and wipe dry with clean cloths.

c. Wax tail rotor blade surfaces with wax. Do not use silicone type waxes, as waxes may interfere with future repairs or refinishing.

5-251. REMOVAL — TAIL ROTOR BLADES. Refer to paragraph 5-230.

5-252. INSPECTION — TAIL ROTOR BLADES. If a crack in the tail rotor blade is suspected, refer to TM 1-1520-254-23, Technical Manual Aviation Unit Maintenance (AVUM) and Aviation Intermediate Maintenance (AVIM) Manual Nondestructive Inspection Procedures for OH-58 Helicopter Series.

WARNING

If a crack exists in any location, the blade shall be replaced. All dents shall be closely inspected for nicks, scratches, and cracks. If nicks or scratches exist in dents and the total depth is in excess of that permitted in steps a.(2), a.(3), b.(2), and b.(3) the blade shall be replaced. Loose rivets shall be cause for tail rotor blade replacement.

a. Skins inboard of station 23. (Refer to figure 5-83.)

(1) Nicks and scratches running within **0 to 15** degrees of a line parallel to the leading edge and not in excess of **0.004** inch in depth shall be polished out.

(2) Nicks and scratches running within **15 to 90** degrees of a line parallel to the leading edge and not in excess of **0.003** inch in depth shall be polished out.

(3) Sharp dents in the skin which do not break the skin or remove the metal, except in the area of the retention block which are not in excess of **0.010** inch in depth, are permissible.

(4) Nonsharp dents in skin, except in area of the retention block which are not in excess of **0.030** inch in depth are permissible.

b. Skins outboard of station 23.

(1) Nicks and scratches which are not in excess of **0.004** inch in depth shall be polished out.

(2) Sharp dents which do not break the skin or remove metal and are not in excess of **0.060** inch in depth are permissible.

(3) Nonsharp dents, which are not in excess of **0.090** inch in depth are permissible.

c. Abrasive Strip.

NOTE

If abrasive strip is cut through, ripped, or has been displaced to cause an abrupt discontinuity, the blade shall be scrapped.

(1) Dents in the abrasive strip, inboard of station 13.0 in excess of **0.006** inch are not acceptable at the extreme leading edge radius.

(2) Other dents in the abrasive strip should be inspected to the same limits as dents in the skin. (Refer to steps a. and b.)

d. Scratches, nicks, or dents in the extreme trailing edge **0.100** inch deep or less shall be polished out over a distance of at least **1.000** inch each side of the damage.

(1) Inspect blade tip for loose, missing, damaged or corroded rivets.

(2) If defects are found, inspect tip per paragraph 5-252e and replace affected rivets prior to further operation.

e. Void Limits. If void damage anywhere on either side of the tail rotor blade is suspected, refer to TM 1-1520-254-23, Technical Manual Aviation Unit Maintenance (AVUM) and Aviation Intermediate Maintenance (AVIM) Manual Nondestructive Inspection Procedures for OH-58 Helicopter Series.

(1) Voids are not allowed within **0.250** inch of the trailing edge and within **0.500** inch of the inboard and outboard ends of the abrasive strip, except as

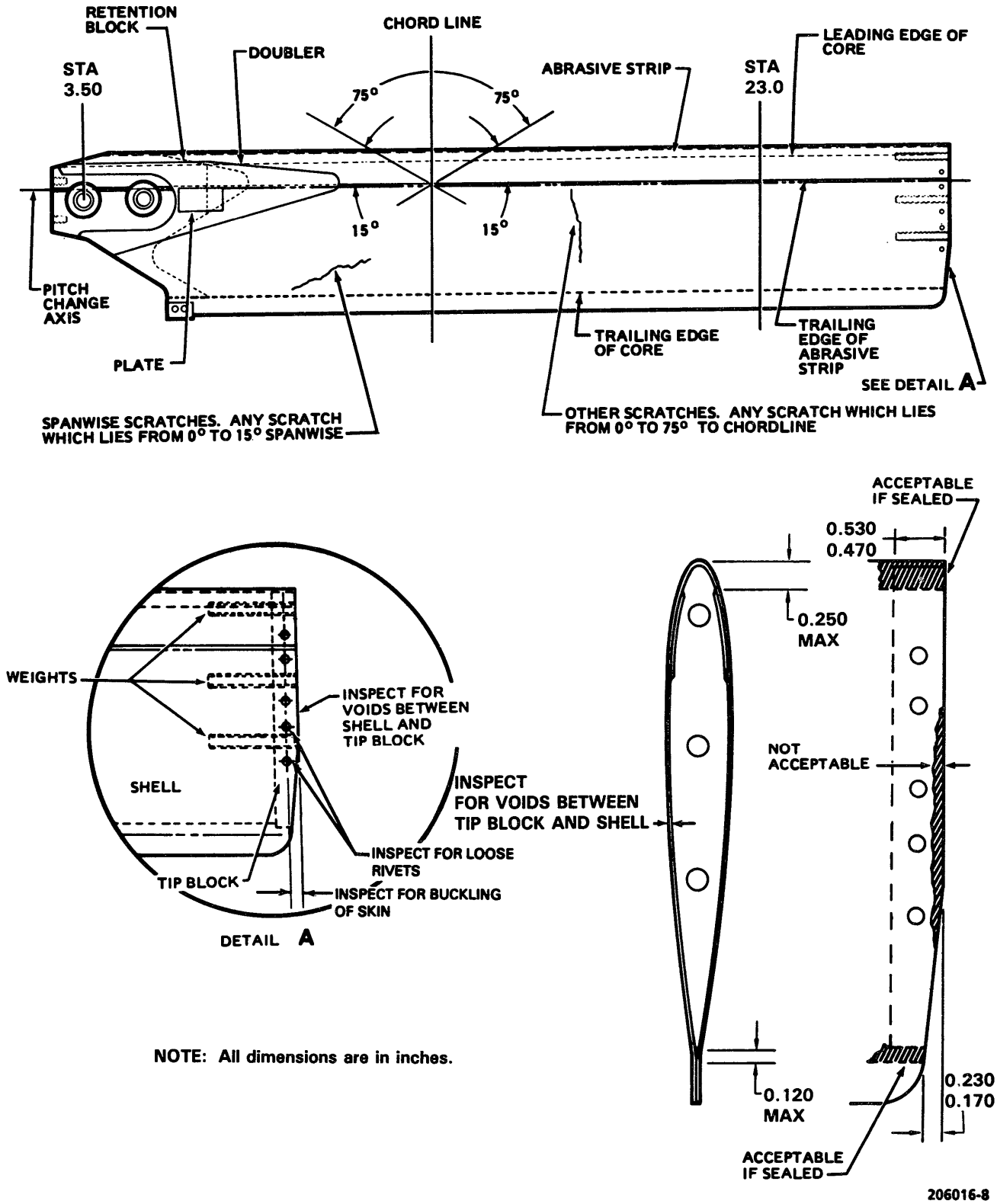

Figure 5-83. Tail Rotor Blade

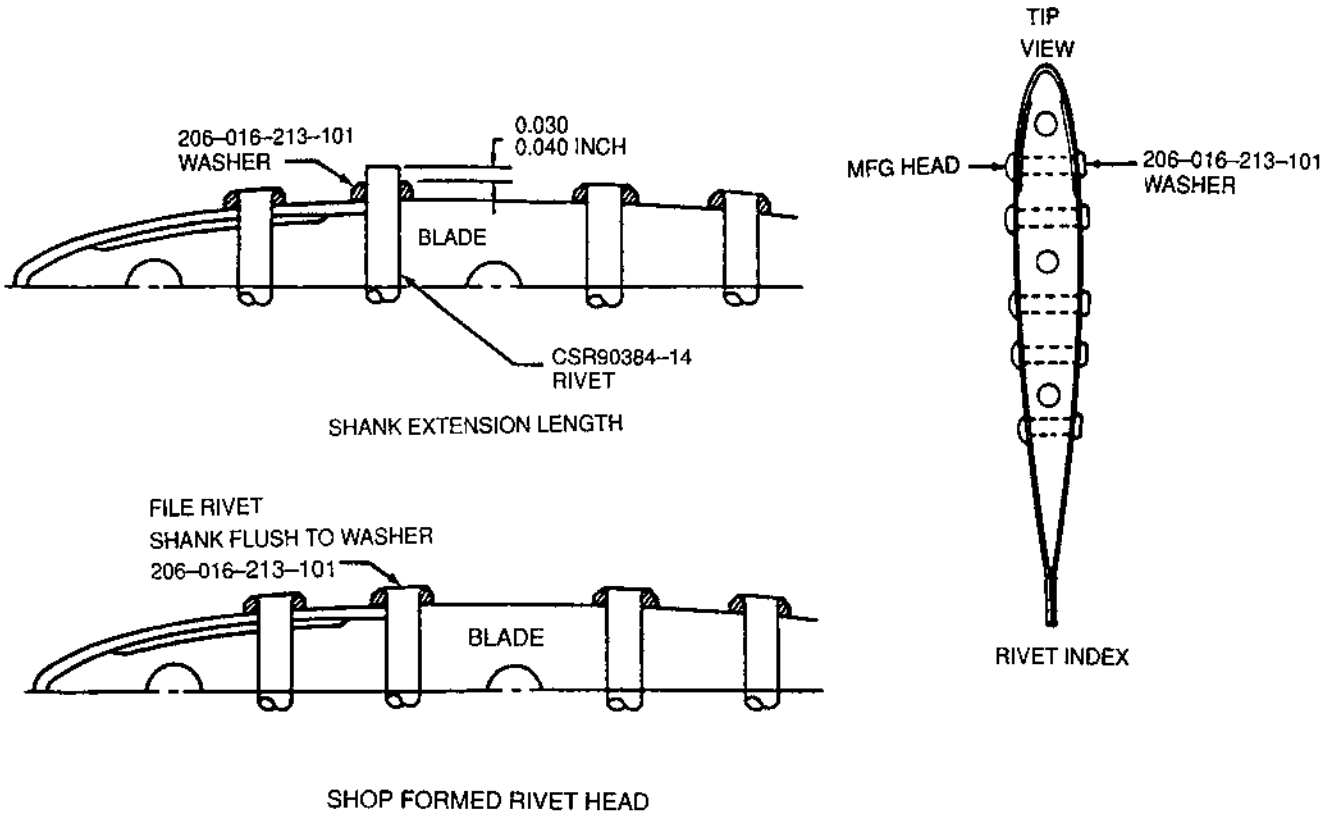

NOTE

INSTALL REPLACEMENT RIVETS WITH
WET EPOXY POLYAMIDE PRIMER

Figure 5-83.1. Tail rotor blade rivet installation

allowed in substeps (3) and (4) below. If more than **15%** of the remaining area of the abrasive strip is void, the blade shall be scrapped.

(2) At the trailing edge of the shell a void **0.120** inch maximum in width (chordwise) is allowed. Edge voids are not acceptable.

(3) Voids between the shell and the root end retention block.

(a) A void **0.250** inch wide (maximum) at the leading edge is acceptable provided it is sealed.

(b) A void (or gap), **0.120** inch wide (chordwise) between the shell and the butt block at the trailing edge, is acceptable provided it is sealed.

(c) Edge voids are not allowed between the shell and the retention block except as specified in preceding substeps (1) and (2).

(4) Voids between the shell and tip block. Inspect for voids by tapping with large coin or tapping hammer. Limits for voids between the shell and tip block are as follows:

(a) A void (or gap) **0.250** inch wide (chordwise) at the leading edge is acceptable but shall be sealed. Seal with adhesive (C19).

(b) A void (or gap) **0.120** inch side (chordwise) between the shell and the aft end of the tip block is acceptable but shall be sealed. Seal with adhesive (C19).

(c) With the exception of substeps (a) and (b), voids between the shell and the tip block that are visible at the tip are unacceptable.

(d) Any voids in excess of these limitations shall require replacement of the blade.

(e) Any movement of the tip block outboard of the shell shall require replacement of the blade.

(5) Voids between root end doubler and skin.

(a) Edge voids are not allowed.

(b) Voids not exceeding **0.500** inch chordwise and **1.000** inch spanwise are acceptable provided **0.250** inch good edge bond exists.

f. Inspect bearings in tail rotor blades for excessive wear or damage. Maximum axial looseness of bearing not to exceed **0.010** inch (**0.190** inch movement at tip) provided no increase in airframe vibrations are encountered.

NOTE

The 0.190 inch movement at tip measurement is provided as a reference only, and cannot be measured accurately on the aircraft. Tail rotor blade bearing wear will be indicated by a high frequency vibration.

5-253. REPAIR TAIL ROTOR BLADES. Repair tail rotor blades in accordance with paragraph 5-245 and as follows:

a. Seal and bond voids as follows:

(1) Edge voids under the abrasive strip shall be sealed with adhesive (C13).

(2) Porosity in the bond line at trailing edge of the shell shall be sealed with adhesive (C19).

(3) Voids between the shell and the root end retention block shall be sealed with adhesive (C19).

(4) Voids between the shell and tip block shall be sealed with adhesive (C19).

WARNING

Replacement of blade tip rivets is a flight safety critical task. Rivets are special titanium columbium alloy — No substitution permitted. Corrosion or mechanical damage to the tip rivet holes is cause for blade rejection.

b. Replace defective or missing tip rivets per fig. 5-83.1. Inspect completed repair. If tip block is cracked or tip skin distorted, the blade is not acceptable.

c. Polish out nicks, scratches, and corrosion as follows:

(1) Mask bearings and inboard edge (1/8-inch) of blade with masking tape (C143).

WARNING

Cleaning solvents are flammable and toxic. Use only in well-ventilated area. Avoid skin contact and inhalation of vapors. Protect eyes with safety glasses.

WARNING

Aliphatic Naphtha is flammable and toxic to eyes, skin, and respiratory tract. Wear protective gloves and goggles/face shield. Avoid repeated or prolonged contact. Use only in well-ventilated areas (or use approved respirator as determined by local safety/industrial hygiene personnel). Keep away from open flames, sparks or other sources of ignition.

(2) Degrease repair area with naphtha (C22).

WARNING

Acetone is extremely flammable and toxic to eyes, skin, and respiratory tract. Wear protective gloves and goggles/face shield. Avoid repeated or prolonged contact. Use only in well-ventilated areas (or use approved respirator as determined by local safety/industrial hygiene personnel). Keep away from open flames, sparks, hot surfaces or other sources of ignition.

(3) Using cloth pads soaked in acetone (C2), strip finish from repair area. Do not remove primer from surface except in areas where the primer is cracked, deteriorated, corroded, or otherwise appears damaged. Remove primer as follows:

(a) Remove primer in these areas down to bare metal using abrasive cloth (C45) or 180 grit or finer paper (C124 through C127).

(4) Polish out reparable nicks, scratches, and corrosion with abrasive cloth (C45) or 400 grit paper (C126). Polish in spanwise direction.

(5) Wash area with dishwashing compound (C61). Rinse thoroughly with clean running water. Achieve an unbroken film of water on the surface. Air dry surface.

(6) If corrosion was present on the aluminum butt block, apply a generous amount of alcoholic phosphoric solution (C21), using a clean cloth or brush. Rub briskly for approximately **40 to 60** seconds.

(7) Rinse area thoroughly with clean running water and wipe dry with clean cloth.

NOTE

From completion of Substeps (7) and (8), and until application of final paint finish, surface or repaired area are not to be handled.

(8) On all bare areas of the aluminum butt block surfaces apply chemical conversion coating (C38).

(9) If protective paint finish is not to be applied immediately, recommend surface be covered with paper and secured with masking tape (C143).

CAUTION

Do not use chemical strippers on blades.

d. Prime tail rotor blades. Refer to paragraph 5-247.

e. Apply a coat of acrylic lacquer (C88 or C89); color to match surrounding area.

5-254. INSTALLATION - TAIL ROTOR BLADES. Refer to paragraph 5-236.

SECTION VII TRACKING PROCEDURES (ALL MODELS)

NOTE

Use Vibration Analyzer System test set (refer to TM 1-6625-724-13).

PAGES 5-170 THRU 5-199/(5-200 BLANK) INCLUDING FIGURES 5-84 THRU 5-94 DELETED

CHAPTER 6
DRIVE TRAIN SYSTEM

6-1. DRIVE TRAIN SYSTEM.

6-2. DESCRIPTION — DRIVE TRAIN SYSTEM. This system includes transmission, freewheeling drive unit, freewheeling to transmission driveshaft, oil cooler fan and driveshaft, tail rotor driveshafts, bearing hangers, and tail rotor gearbox. (See figure 6-1.) (See figure 6-25 for fail rotor driveshafts after completion of MWO 55-1520-228-50-25.)

6-3. TROUBLESHOOTING — DRIVE TRAIN. Below is a brief summary of drive train troubles which may be encountered in performing maintenance. Conditions and possible causes listed have been limited to those reasonably probable (though not necessarily frequent in normal service) which could become known through pilot reports or by inspection methods applicable in maintenance, and which could be subject to some evaluation at this level, although final corrective action by a higher level might be required in some instances. Conditions involving obvious major damage are omitted, as are those caused by accident or an unusual chain of events which would require information in addition to that available in troubleshooting section and in maintenance instructions for systems and components of the drive train.

a. In transmission troubleshooting, observe the following:

(1) Low oil level will not cause a low oil pressure indication, provided sump contains enough oil to cover pump inlet. Oil temperature might rise, however. Overfilling, above standard oil level, may cause low pressure indication due to foaming of the oil caused by excessive churning by the gears.

(2) Effects of an oil leak will depend on its location in system and rate of leakage. An external leak can eventually allow sump to be pumped dry, causing failure of transmission. While oil remains to supply pump, the pressure relief valve would tend to maintain normal system pressures, compensating for leakage. This applies especially to leaks located between pump and relief valve. Leaks occurring beyond relief valve could cause some indication of low oil pressure. Leakage to interior of transmission, while not affecting oil level, could starve lubrication areas beyond the leak and might affect indicated oil pressure and temperature.

(3) Cumulative clogging of oil filter screens will not be shown by a gradual drop of indicated oil pressure as it may on some other aircraft oil systems. Pressure relief valve would maintain normal pressure even if filter screens become so clogged as to force oil flow through filter bypass valve.

b. For main driveshaft troubleshooting, apply the following:

(1) Trouble conditions of main driveshaft can seldom be detected in operation, since there are no reliable indications except possibly in an extreme condition. "Suspected vibration" is only partially accurate as a term for such conditions as dynamic out-of-balance or faulty coupling action. Vibration would result, as well as abnormal stresses and wear, but would be absorbed in structure and pylon mounts or effectively masked by normal vibrations of the helicopter, providing no distinct indication to pilot.

(2) Driveshaft trouble indications are, therefore, usually those revealed by careful inspection.

(3) Principle causes of driveshaft trouble are faulty installation procedure and improper lubrication of spherical tooth couplings.

c. For tail rotor drive system troubleshooting, apply same principles as for main driveshaft.

NOTE

Before using table 6-1, ensure all normal operational checks have been performed. If a malfunction exists which is not listed in table 6-1, notify the next higher level of maintenance.

Table 6-1. Troubleshooting — Drive Train

CONDITION

TEST OR INSPECTION

CORRECTIVE ACTION

1. Low oil pressure on caution panel or pressure gage, but not on both.

STEP 1. Check for faulty caution panel. Refer to paragraph 9-147 A or 9-150 C

Replace faulty caution panel. Return faulty panel to depot maintenance.

STEP 2. Check for faulty pressure gage. Refer to paragraph 8-282 A or 8-291 C

Replace faulty pressure gage. Refer to paragraph 8-290.

STEP 3. Check electrical circuit for faulty wiring. Refer to paragraph 9-147 A and 9-150 C

Repair faulty electrical wiring.

STEP 4. Check for faulty pressure indicator or transmitter. Refer to paragraphs 8-285, 8-286, 8-287, 8-294, 8-295, and 8-296. C

Replace faulty pressure indicator or transmitter. Refer to paragraphs 8-288, 8-289, 8-290, 8-297, 8-298, and 8-299.

2. Low oil pressure on both caution panel and pressure gage.

STEP 1. Check pressure relief valve for adjustment or malfunction. Refer to paragraph 6-273.

Adjust pressure relief valve. Refer to paragraph 6-273.

Replace pressure relief valve. Refer to paragraph 6-276.

STEP 2. Check for leakage and for restriction between pressure relief valve and transmitter.

Repair oil line or clean oil line to remove restriction as required.

STEP 3. Check for faulty oil pump. Refer to paragraph 6-229.

Replace faulty oil pump. Refer to paragraph 6-231.

3. No oil pressure with normal oil level in sump.

STEP 1. Check for faulty gage or transmitter. Refer to paragraph 8-291 C

Replace faulty gage or transmitter. Refer to paragraph 8-298.

STEP 2. Check electrical circuits for faulty wiring. Refer to paragraph 8-298.

Repair faulty electrical wiring.

Table 6-1. Troubleshooting — Drive Train — Continued

CONDITION

TEST OR INSPECTION

CORRECTIVE ACTION

STEP 3. Check for faulty oil pump. Refer to paragraphs 6-229 and 6-231.

Replace transmission or replace oil pump only if not damaged internally and oil system not contaminated with metal particles.

STEP 4. Check for faulty pressure indicator or transmitter. Refer to paragraphs 8-285, 8-286, 8-287, 8-294, 8-295, and 8-296. C

Replace faulty pressure indicator or transmitter. Refer to paragraphs 8-288, 8-289, 8-290, 8-297, 8-298, and 8-299.

4. No oil pressure — check reveals no oil supply in transmission sump.

STEP 1. Check system to determine cause of oil loss.

Special inspection required, refer to page 1-52.

5. High oil pressure.

STEP 1. Check for faulty gage or faulty transmitter. Refer to paragraph 8-280.

Replace faulty gage or faulty transmitter.

STEP 2. Check electrical circuit for faulty wiring.

Repair faulty electrical wiring.

STEP 3. Check pressure relief valve for adjustment or malfunction. Refer to paragraph 6-273.

Adjust pressure relief valve. Refer to paragraph 6-273.

Replace pressure relief valve. Refer to paragraph 6-276.

STEP 4. Check for faulty pressure indicator or transmitter. Refer to paragraphs 8-285, 8-286, 8-287, 8-294, 8-295, and 8-296. C

Replace faulty pressure indicator or transmitter. Refer to paragraphs 8-288, 8-289, 8-290, 8-297, 8-298, and 8-299.

Table 6-1. Troubleshooting — Drive Train — Continued

CONDITION

TEST OR INSPECTION

CORRECTIVE ACTION

6. High oil temperature on caution panel or gage but not both.

STEP 1. Check for faulty caution panel or temperature switch. Refer to paragraph 9-154.

Replace caution panel. Return faulty panel to depot maintenance.

Replace faulty temperature switch. Refer to paragraphs 9-156 and 9-158.

STEP 2. Check electrical circuits for faulty wiring.

Repair faulty wiring.

STEP 3. Check area around transmission for obstructed air flow.

Clean cowl opening and sump area.

STEP 4. Check oil cooler for obstructed air passage.

Clean cooler core air passage.

STEP 5. Check oil cooler for internal oil passages. Refer to paragraph 6-256.

Replace cooler if internally clogged. Refer to paragraph 6-257.

Flush oil lines.

Check transmission filters, pump screen magnetic plug. Refer to paragraph 6-251 and 6-289.

Step 6. Check oil cooler for thermostatic valve malfunction.

Replace oil cooler. Refer to paragraph 6-257.

Step 7. Check for clogged transmission oil jets.

Clean or replace jets. Refer to paragraph 6-284 and 6-73.

Replace transmission if internally damaged. Refer to paragraph 6-73.

Step 8. Check transmission magnetic plug and filters for evidence of seized bearings or other internal failure.

Replace transmission and oil cooler. Flush external oil lines. Refer to paragraphs 6-73 and 6-257.

Table 6-1. Troubleshooting — Drive Train — Continued

CONDITION

TEST OR INSPECTION

CORRECTIVE ACTION

STEP 9. Check for oil leaks in cooler or oil lines which could cause the thermo bypass valve to operate and bypass cooler. Refer to paragraphs 6-256 and 2-291.

Repair or replace emergency bypass valve. Refer to paragraph 6-237.

Replace oil cooler or oil lines. Refer to paragraphs 6-255, 6-257 or 6-291.

7. Oil caution light on.

STEP 1. Check caution light circuit for short or faulty wiring.

Repair electrical circuit as necessary. Refer to paragraph 9-147 A or 9-150 C.

STEP 2. Check for low oil level in sump.

Service transmission with oil. Refer to paragraph 1-10.

STEP 3. Check oil cooler and lines for leaks.

Repair leaks as necessary.

TRANSMISSION

1. Metal chips found on magnetic sump plug or pump screen. Refer to paragraphs 6-289 and 6-290.

STEP 1. Internal transmission failure of gears or bearings.

Replace transmission. Refer to paragraph 6-71 and 6-73.

Replace oil cooler and flush piping. Drain and refill with oil. Refer to paragraph 6-257.

2. Excessive pylon motion (approx. 1/2/rev.)

STEP 1. Pylon mounts worn or installed wrong.

Repair or replace mounts. Refer to paragraphs 2-296 and 2-298.

STEP 2. Loose bearings in pylon link assembly. Refer to paragraph 2-284.

Replace or repair link assemblies. Refer to paragraph 2-287 and 2-288.

3. Water in transmission.

STEP 1. Water in drain lines.

Clear obstructions from lines. Disconnect lines and purge with compressed air.

Table 6-1. Troubleshooting — Drive Train — Continued

CONDITION

TEST OR INSPECTION

CORRECTIVE ACTION

POWER TRAIN SYSTEM

1. Main rotor not moving when gas producer (N1) speed reaches 30%.

STEP 1. Main rotor tiedown not removed.

Remove tiedowns.

STEP 2. Binding or coking of power turbine (N2) engine.

Shut down engine. Repeat start procedure. If no rotation after third attempt, refer to TM 55-2840-241-23 .

FREEWHEELING UNIT

1. Metal chips on magnetic plug.

STEP 1. Inspect for evidence of internal failure.

Replace freewheeling unit.

MAIN DRIVESHAFT:

1. Grease leakage.

STEP 1. Cut or torn preformed packing or boot.

Replace packing or boot. (Assemble with care.) Refer to paragraph 6-17.

2. Abnormal coupling wear.

STEP 1. Faulty lubrication or wrong lubricant. Refer to paragraph 6-13.

Clean and lubricate adapter, or replace driveshaft. Refer to paragraphs 6-14 and 6-15.

3. Lubricant breakdown in forward adapter.

STEP 1. Misalignment or wrong lubricant. Refer to paragraph 6-14 and 6-15.

Replace driveshaft and associated parts as required. Refer to paragraph 6-13 and 6-15.

Table 6-1. Troubleshooting — Drive Train — Continued

CONDITION

TEST OR INSPECTION

CORRECTIVE ACTION

4. Suspected vibration.

STEP 1. Loose engine adapter.

Replace adapter and any worn associated parts. Refer to paragraph 6-14.

STEP 2. Main driveshaft improperly assembled.

Disassemble. Inspect and assemble properly. Refer to paragraph 6-11.

TAIL ROTOR DRIVE SYSTEM

1. Suspected vibration.

STEP 1. Worn hanger bearings or couplings. Refer to paragraph 6-127.

Replace hanger assembly.

STEP 2. Misaligned driveshaft hangers. Refer to paragraph 6-127.

Align hangers properly. Refer to paragraph 6-127.

STEP 3. Driveshafts improperly installed.

Check installation. Refer to paragraph 6-118 or 6-165.

2. Binding or roughness when manually checked. Refer to paragraph 6-115.

STEP 1. Dry or faulty bearing. Refer to paragraph 6-115.

Isolate faulty hanger, bearing or collar by disconnecting shafts. Replace hanger, bearing or collar as required. Refer to paragraph 6-115.

STEP 2. Defective gearbox.

Check gearbox, replace defective unit. Refer to paragraphs 6-183 and 6-187, or 6-203 and 6-205.

Table 6-1. Troubleshooting — Drive Train — Continued

CONDITION TEST OR INSPECTION CORRECTIVE ACTION
3. Metal chips on gearbox chip detector. Refer to paragraph 6-195.
STEP 1. Internal failure of gears or bearings.
Replace gearbox. Refer to paragraphs 6-185 and 6-187 or 6-203 and 6-205.
STEP 2. Faulty wiring or faulty electric chip detector.
Repair electrical circuits as necessary. Check wiring for continuity and grounding. Repair faulty wiring or replace electric chip detector. Refer to paragraphs 6-194 and 6-196 or 6-219 and 6-221.
4. Oil leakage at gearbox.
STEP 1. Faulty seals or packings.
Replace seals. Replace output seals. Refer to paragraph 6-188 or 6-207 through 6-210. Replace input seals. Refer to paragraph 6-189 or 6-212 through 6-214.
STEP 2. Cracked gearbox housing.
Replace gearbox if cracks are found. Refer to paragraph 6-185 and 6-187 or 6-203 and 6-205.

6-4. METAL PARTICLES CONTAMINATION — TRANSMISSION, FREEWHEELING UNIT AND TAIL ROTOR GEARBOX. Metal particles found in or on oil filters, screens or chip detector plugs may indicate failure of an internal part of the component. The presence of metal particles, however, is not necessarily an indication that the component is no longer serviceable. The quantity, source, form, and type of metal found, together with the service history of the particular component, must be taken into consideration. The time accumulated since the component was new or overhauled, previous failures and the type of operation are important factors in determining the further serviceability of the unit. The particles found may be steel, silver, aluminum, magnesium, copper (bronze) or phenolic in various shapes and quantities. For a detailed explanation of the action made necessary by the presence of each of the possible types of particles in the component, refer to table 6-2.

WARNING

When any particles found are readily identified as fragments of parts, such as gears, nuts, bearings, snap-rings, lockwire, etc., replace contaminated transmission assembly with its oil cooler, contaminated freewheeling unit, or contaminated tail rotor assembly.

1. Mast
2. Main Transmission Assy.
3. Oil Cooler
4. Transmission Oil Filter Assy.
5. Main Driveshaft Assy. (Engine To Transmission)
6. Coupling (Main Driveshaft)
7. Freewheeling Assembly
8. Splined Adapter
9. Disc Assy
10. Hanger (Blower Assy)
11. Blower Assy
12. Bearing Hangers
13. Tail Rotor Driveshaft
14. Tail Rotor Gearbox

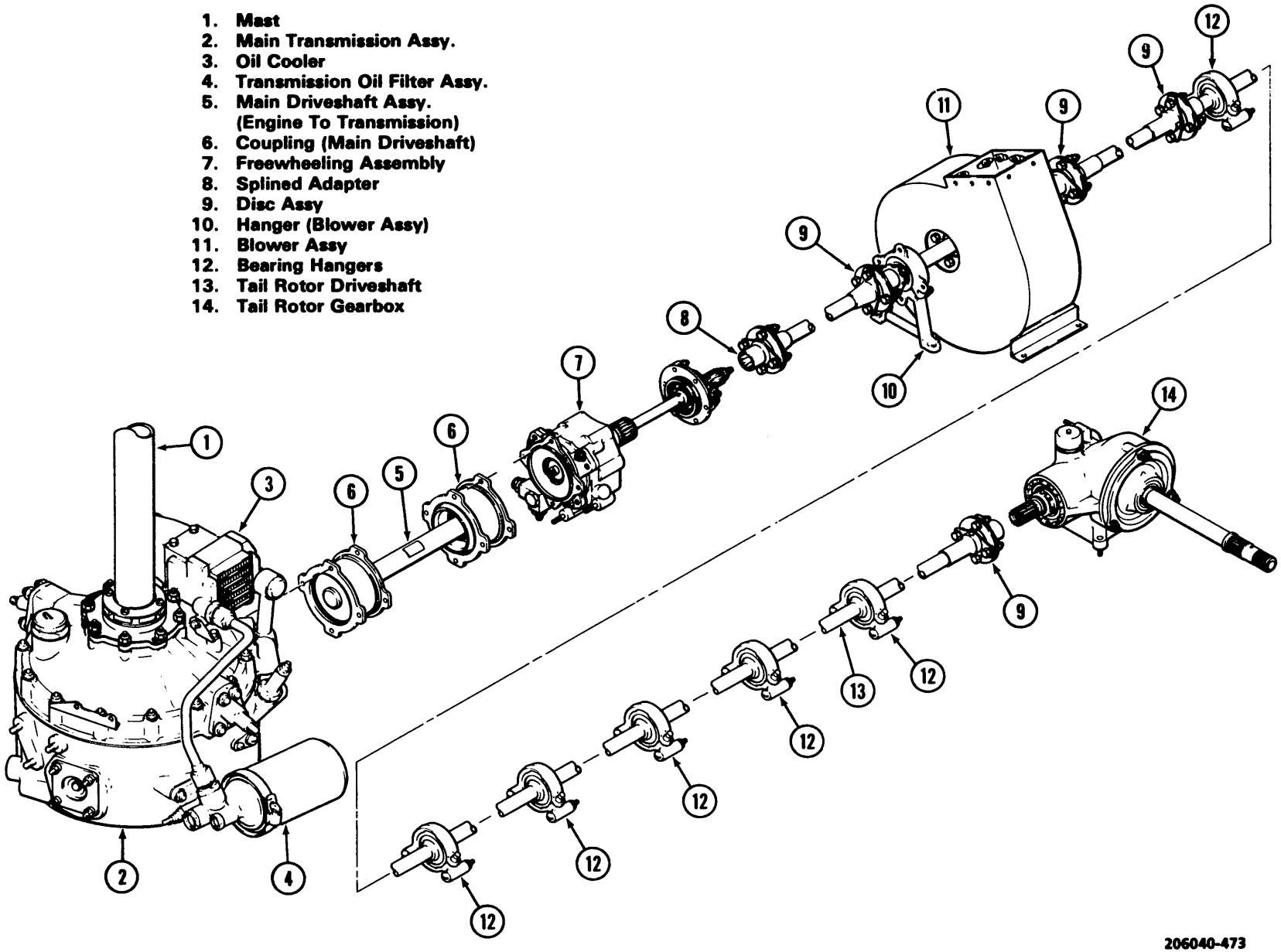

Figure 6-1. Drive Train System (Prior to MWO 55-1520-228-50-25)

Table 6-2. Metal Particles Contamination

KIND OF METAL	QUANTITY AND/OR SIZE	ACTION REQUIRED	NOTES
Steel	Fuzz, fine, hair-like particles	None	Result of normal wear. May have exaggerated appearance because of oil
	Particles in splinter or granular form	Perform serviceability check	Usually indicates failure
		Replace component if necessary	
	Thin flakes not exceeding **0.0156** inch in thickness and **0.0626** inch in length. Quantity not to exceed **10**flakes	Perform serviceability check	Small quantity may not indicate bearing failure
	More than **10**flakes not exceeding **0.0156** inch in diameter and **0.2500** inch in length	Perform serviceability check	Usually indicates failure. May be bearing in one of the accessory quills
		Replace component if necessary	
Aluminum or Magnesium	Particles in granular form or like miniature lathe turnings.	Perform serviceability check	May be result of use of these materials as mallets or drifts during assembly
		Replace component if necessary	
Phenolic		Perform inspection for source	Result of the use of mallets and drifts during assembly of bearing retainer
Copper (Bronze)	Particles. in granular form	Disassemble component, as required, to determine extent of damage	May indicate excessive wear of bearing cages as result of bearing failure
		Replace component if necessary	
	Small amount in flake form	Perform serviceability check	Result of normal wear
Silver	Small amount of silver flakes	Perform serviceability check	Result of normal wear
	Silver flakes with other metals	Perform serviceability check Replace component if necessary	May be result of internal failure

6-5. IDENTIFICATION OF METAL PARTICLES.

a. A visual inspection of color and hardness will occasionally suffice to identify the particles. When visual inspection does not positively identify the particle, the kind of particle present may be determined by few simple tests.

b. Equipment to perform tests includes a permanent magnet, sodium chloride, and concentrated nitric acid. Check each as follows:

(1) STEEL. Isolate steel particles with permanent magnet.

(2) SILVER. Identify silver by dissolving a particle in a solution of 50% by volume nitric acid. It may be necessary to warm the solution. Add a few drops of 5% by weight sodium chloride solution. A white precipitate identifies silver.

(3) ALUMINUM. Determine aluminum particles by their reaction to hydrochloric acid. When a particle of aluminum is dropped into hydrochloric (muriatic) acid, it will fizz with a rapid emission of bubbles. The particles will gradually disintegrate and form a black residue.

NOTE

Magnesium and aluminum react similarly in hydrochloric acid. When in doubt, drop particle into nitric acid. Aluminum does not react noticeably in nitric acid.

(4) COPPER OR BRONZE AND MAGNESIUM. Differentiate copper or bronze and magnesium by their respective reactions to nitric acid. When a particle of copper or bronze is dropped into nitric acid, it forms a bright green cloud in the acid. When a particle of magnesium is dropped into nitric acid, it fizzes with a rapid emission of bubbles. Phenolic and aluminum do not react noticeably to nitric acid.

6-6. SERVICEABILITY CHECK.

a. The following procedure should be employed if any doubt exists as to the serviceability of the transmission after finding metal particles in the oil.

(1) Drain transmission, oil cooler, and connecting lines.

(2) Clean chip detector and oil pump inlet screen, and inspect and discard oil filter.

CAUTION

Note condition of packings, seals, and gaskets before reinstallation of units. Replace if damaged.

(3) Install chip detector, oil pump inlet screen, and new oil filter element.

(4) Service transmission with proper oil. Refer to paragraph 1-10.

(5) Ground-run helicopter for one hour. Drain oil into a clean container and inspect for chips. Inspect chip detector and filter for chips. If the number of particles has increased, or if any particles are found which may be visually identified as chips or flakes from a bearing or gear, replace the transmission and oil cooler. If the number of particles has decreased and only minute particles are found, continue the transmission and oil cooler in service.

b. The following procedure should be employed if any doubt exists as to the serviceability of the 90-degree tail rotor gearbox.

(1) Drain gearbox.

(2) Flush gearbox with clean oil (C103). Inspect oil for chips.

NOTE

(3) Clean chip detector and reinstall with drain plug.

(4) Service gearbox with proper oil (C103).

(5) Ground-run helicopter for one hour. Drain oil into a clean container and inspect for chips. Inspect chip detector for chips. If the number of particles has increased, or if any particles are found which may be visually identified as chips or flakes from a bearing or gear, replace gearbox. If the number of particles has decreased and only minute particles are found, continue the gearbox in service.

SECTION I MAIN DRIVESHAFT

6-7. MAIN DRIVESHAFT.

6-8. DESCRIPTION — MAIN DRIVESHAFT. A main driveshaft is installed between the freewheeling coupling on the engine and the adapter flange on the transmission input quill. The two main driveshaft configurations are as follows:

a. Main driveshaft (16, figure 6-2, sheet 1) P/N 206-040-100-13 has spherical gear type flexible couplings at each end to permit angular and axial deflections. A spring in each coupling assists centering of shaft during operation. Lubrication is required.

b. Main driveshaft (26, figure 6-2, sheet 2) P/N SKCP2348-5 consists of a center shaft with flexible couplings at each end. The couplings have several rectangular metal frames that flex to permit angular and axial deflection. A hub on the end adapter permits limited operation if a flexframe or bolt fails. No lubrication is required.

6-9. INSPECTION — MAIN DRIVESHAFT (INSTALLED).

Premaintenance Requirements for Main Driveshaft

Condition	Requirements
Model	OH-58A and OH-58C
Part No. or Serial No.	All
Special Tools	None
Test Equipment	Fluorescent Penetrant Inspection Unit Magnetic Particle Inspection Unit
Support Equipment	None
Minimum Personnel Required	Two
Consumable Materials	None
Special Environmental Conditions	None
References	TM 1-1520-254-23

a. Inspect main driveshaft (16, figure 6-2, sheet 1) P/N 206-040-100-13 for the following:

(1) Loose, missing, or damaged installation hardware.

(2) Grease leakage. If found, remove and inspect.

(3) Cracks, scratches, nicks, dents, and corrosion. Refer to paragraph 6-13, step 6-13a. for limits.

b. Inspect main driveshaft (26, figure 6-2, sheet 2) P/N SKCP2348-5 for the following:

NOTE

Inspect flex element fasteners visually and by finger pressure only. Evidence of looseness or turning the fasteners by wrench or any other means is cause for replacement of the assembly. Slippage marks are applied by the manufacturer. These may be reapplied if there is no evidence of tampering or relative motion.

(1) Loose, missing, or damaged installation hardware.

(2) Cracks, scratches, nicks, dents, and corrosion. Refer to paragraph 6-13, for limits.

6-10. REMOVAL — MAIN DRIVESHAFT.

a. Remove main driveshaft P/N 206-040-100-13.

(1) Remove transmission fairing and open engine cowling to gain access to main driveshaft (16, figure 6-2, sheet 1). Refer to paragraph 2-39 A or 2-40 C .

(2) From right side of helicopter remove two screws (6) necessary to remove driveshaft cover (8) and cone assembly (18).

(3) Remove eleven screws (14) securing driveshaft door (5) to aft side of forward firewall (15).

CAUTION

If main driveshaft is being removed to facilitate maintenance on another component, lubrication of the assembly is not necessary. Compress couplings only enough to release them from mating adapter flange. If couplings are compressed considerably more than required to release them from mating adapter flange, the main driveshaft should be disassembled, inspected, and relubricated.

(4) Remove four bolts (3), eight washers (2), and four nuts (1) attaching forward driveshaft coupling to input adapter on transmission.

(5) Remove four bolts (9), eight washers (10), and four nuts (11) attaching aft driveshaft coupling to freewheeling adapter flange.

(6) Push aft on forward coupling to compress springs and obtain clearance between forward driveshaft coupling and input adapter flange. Move forward end of driveshaft outboard to clear input adapter flange. Move driveshaft assembly aft passing forward coupling through opening and remove from helicopter.

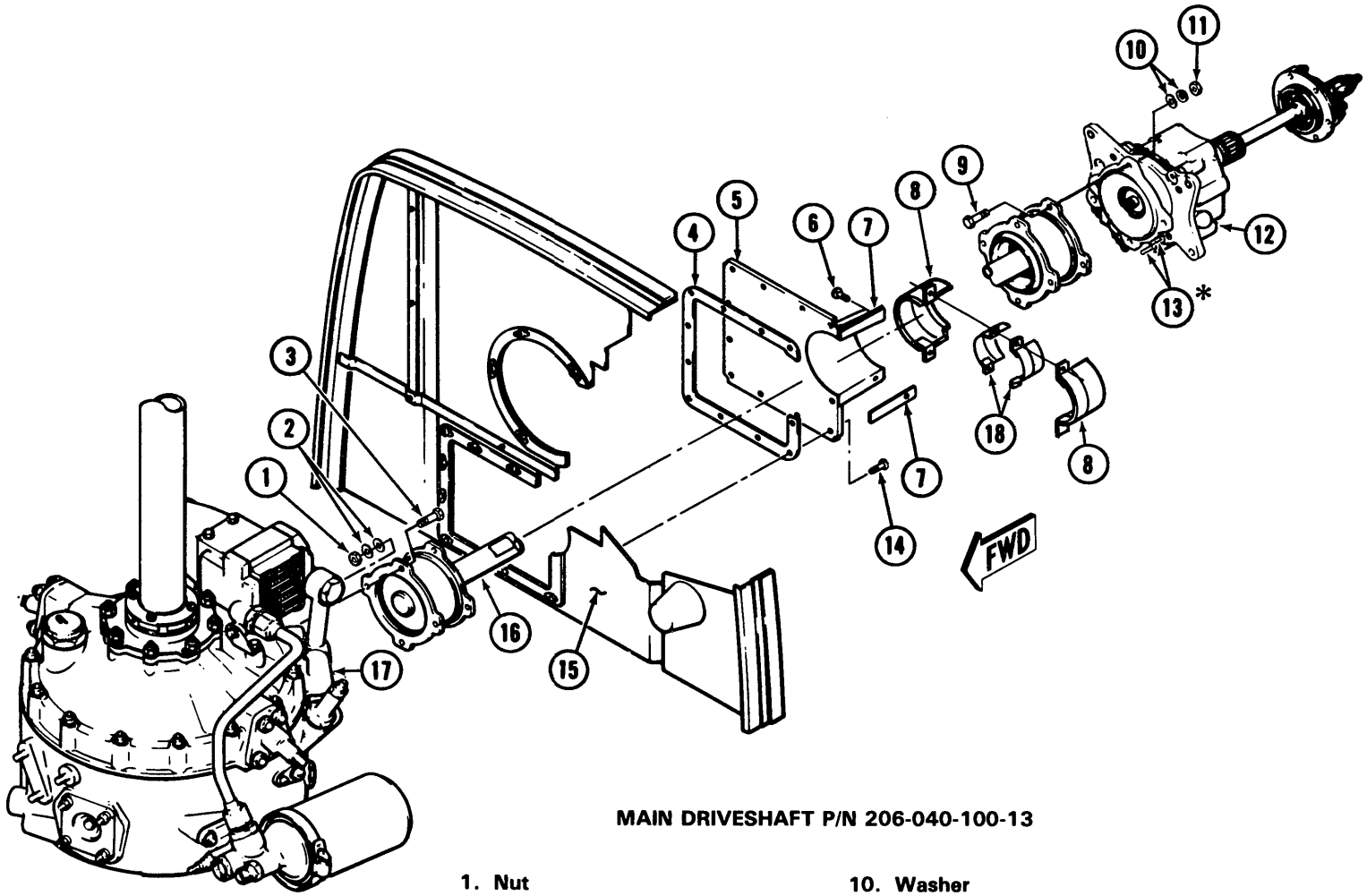

MAIN DRIVESHAFT P/N 206-040-100-13

1. Nut
2. Washer
3. Bolt
4. Gasket
5. Door, Driveshaft
6. Screw
7. Gasket
8. Cover, Driveshaft
9. Bolt
10. Washer
11. Nut
12. Freewheeling Assembly
13. Rotor Brake Mounting Studs *
14. Screw
15. Forward Firewall
16. Main Driveshaft Assembly
17. Transmission
18. Cone Assembly

*Not used

Figure 6-2. Main Driveshaft (Sheet 1 of 4)

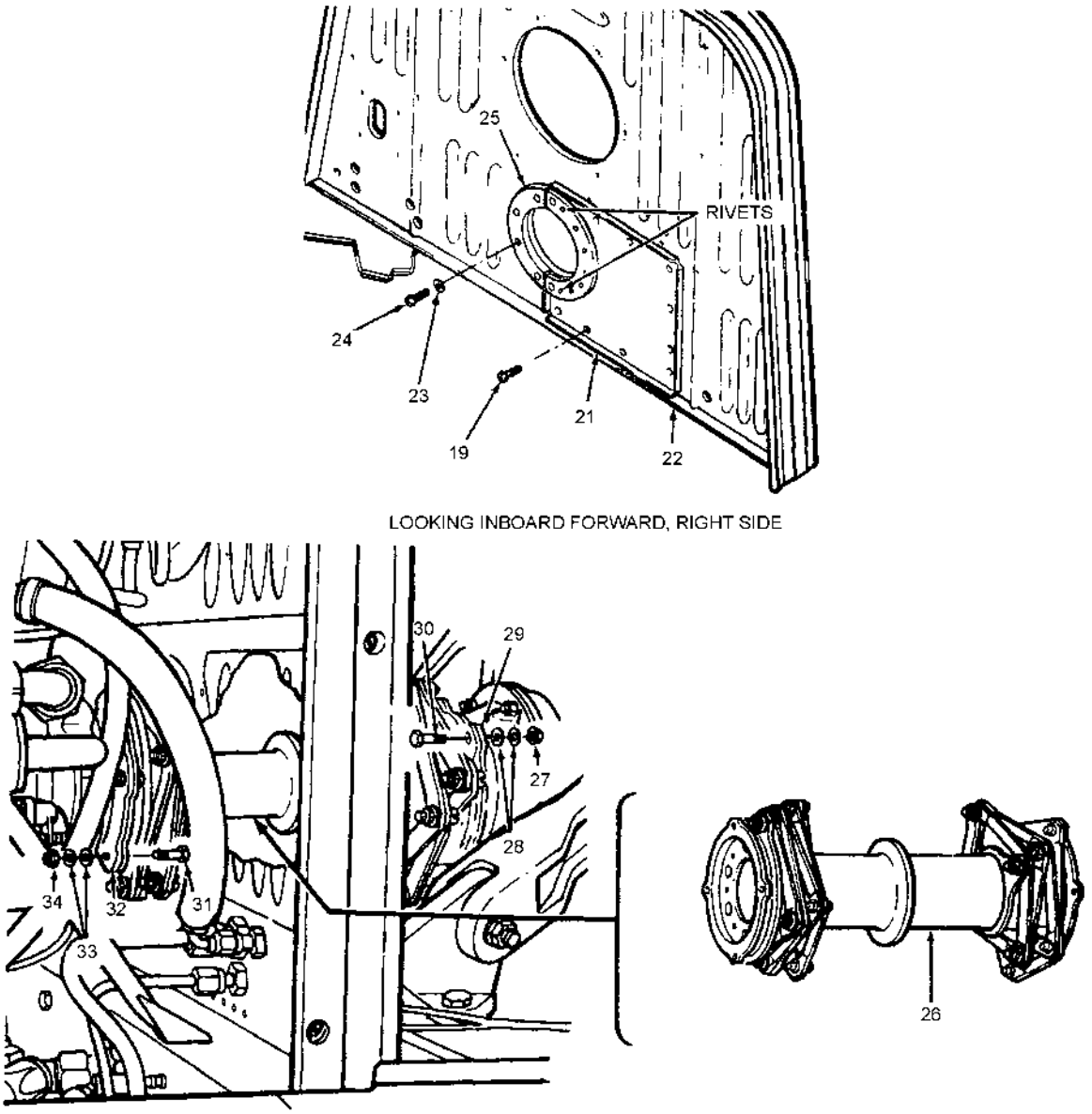

19.	Screws	27.	Nut
20.	Delete	28.	Washer
21.	Closure Plate and Gasket	29.	Quill Adapter
22.	Forward Firewall	30.	Bolt
23.	Washer	31.	Bolt
24.	Screw	32.	Freewheeling Unit Adapter
25.	Cover Assembly and Gasket	33.	Washer
26.	Main Driveshaft	34.	Nut

Figure 6-2. Main Driveshaft (Sheet 2 of 4)

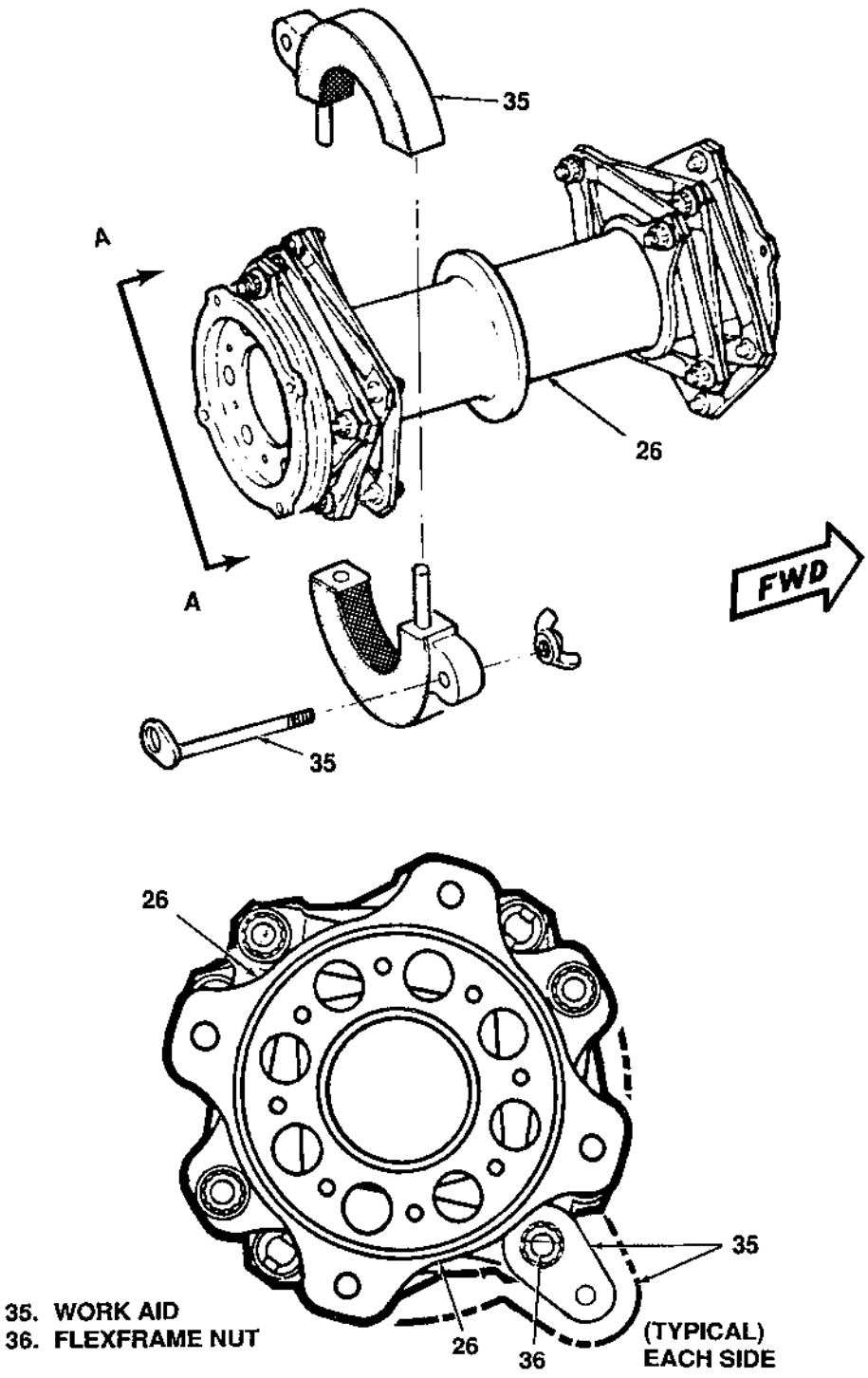

Figure 6-2. Main Driveshaft (Sheet 3 of 4)

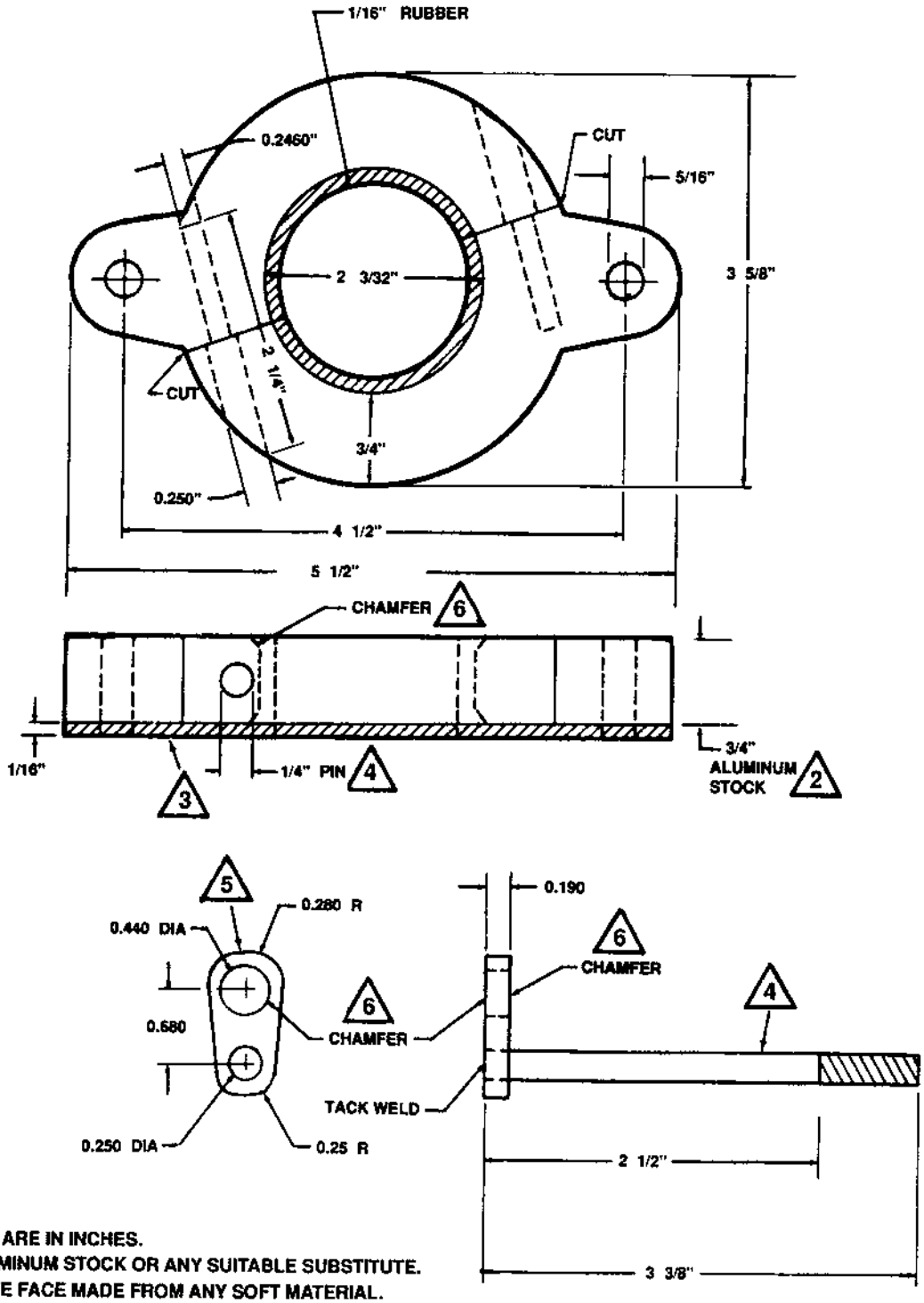

NOTES:

1 ALL DIMENSIONS ARE IN INCHES.
2 MAKE FROM ALUMINUM STOCK OR ANY SUITABLE SUBSTITUTE.
3 SOFT PROTECTIVE FACE MADE FROM ANY SOFT MATERIAL.
4 MAKE FROM 1/4 INCH STEEL BOLT.
5 MAKE FROM 3/16 INCH MILD STEEL.
6 BREAK ALL SHARP EDGES, CHAMFER 0.030 INCH X 45 DEGREES.

WORK AID FOR MAIN DRIVESHAFT
P/N SKCP 2348-5 REMOVAL/INSTALLATION

MS038431

Figure 6-2. Main Driveshaft (Sheet 4 of 4)

(7) If main driveshaft (16) does not require disassembly, cut strips of cardboard or wood of sufficient length to fit between the two couplings (10, figure 6-3). Place material on main input shaft (16) and secure with masking tape (C143). This will aid in preventing the collapse of outer adapters.

b. Remove main driveshaft P/N SKCP2348-5.

NOTE

Access to the driveshaft for removal is through the transmission cowling door on the right side. Removal will be easier if the transmission cowling is removed. Tube referred to in par. (6) is the particle separator bleed air tube illustrated in figure 4-3.

(1) Open engine cowling to gain access to main driveshaft (26, figure 6-2, sheet 2). Refer to paragraph 2-39 A or 2-40 C.

(2) Remove screws (24) and washers (23) from main driveshaft cover assembly and gasket (25). Remove main driveshaft cover assembly and gasket (25) from forward firewall (22).

(3) Remove screws (19) and washers (20) securing closure plate and gasket (21) to forward firewall (22).

(4) Remove four nuts (34), eight washers (33), and four bolts (31) connecting aft fitting of main driveshaft (26) to freewheeling unit adapter (32).

(5) Remove four nuts (27), eight washers (28), and four bolts (30) connecting forward fitting of main driveshaft (26) to transmission input quill adapter (32).

(6) Remove tube extending from bottom of centrisep to firewall mounted tee on forward side of forward firewall (22).

(7) Fabricate work aid (35, figure 6-2, sheet 3) as shown in figure 6-2, sheet 4.

(8) Install work aid (35, figure 6-2, sheet 3) by positioning lugs of the two tightening screws over head of flexframe nut (36) at aft end of main driveshaft (26).

(9) Place the two split-halves of work aid (35) over main driveshaft (26) and attach tightening screws with wing nuts.

CAUTION

Main driveshaft should be compressed only to the extent necessary for removal to avoid damage.

(10) Free main driveshaft (26) from freewheeling unit adapter (32) and transmission input quill adapter (29) by turning wing nuts of work aid (35) to compress main driveshaft (26).

(11) Remove main driveshaft (26) and place on suitable work surface.

(12) Remove work aid (35) from main driveshaft (26).

6-11. DISASSEMBLY — MAIN DRIVESHAFT P/N 206-040-100-13.

a. Remove retaining ring (6, figure 6-3) from outboard end of coupling (10).

b. Remove retainer ring (15) from inboard end of coupling (10).

NOTE

After coupling and spur gear have been run together, they should not be changed from their original position to each other or intermixed from transmission end or freewheeling end of main input shaft. Before disassembly, index mark (paint or felt tip marker) in such a manner that marks will not be obliterated during maintenance. Do not use vibro-etch or stamping to mark parts.

c. Remove coupling (10) from driveshaft coupling seal (13) and spur gear (12).

d. Remove shaft centering spring (9) from coupling (10).

e. Remove grease retainer plate (8) with packing (7) from outboard end of coupling (10).

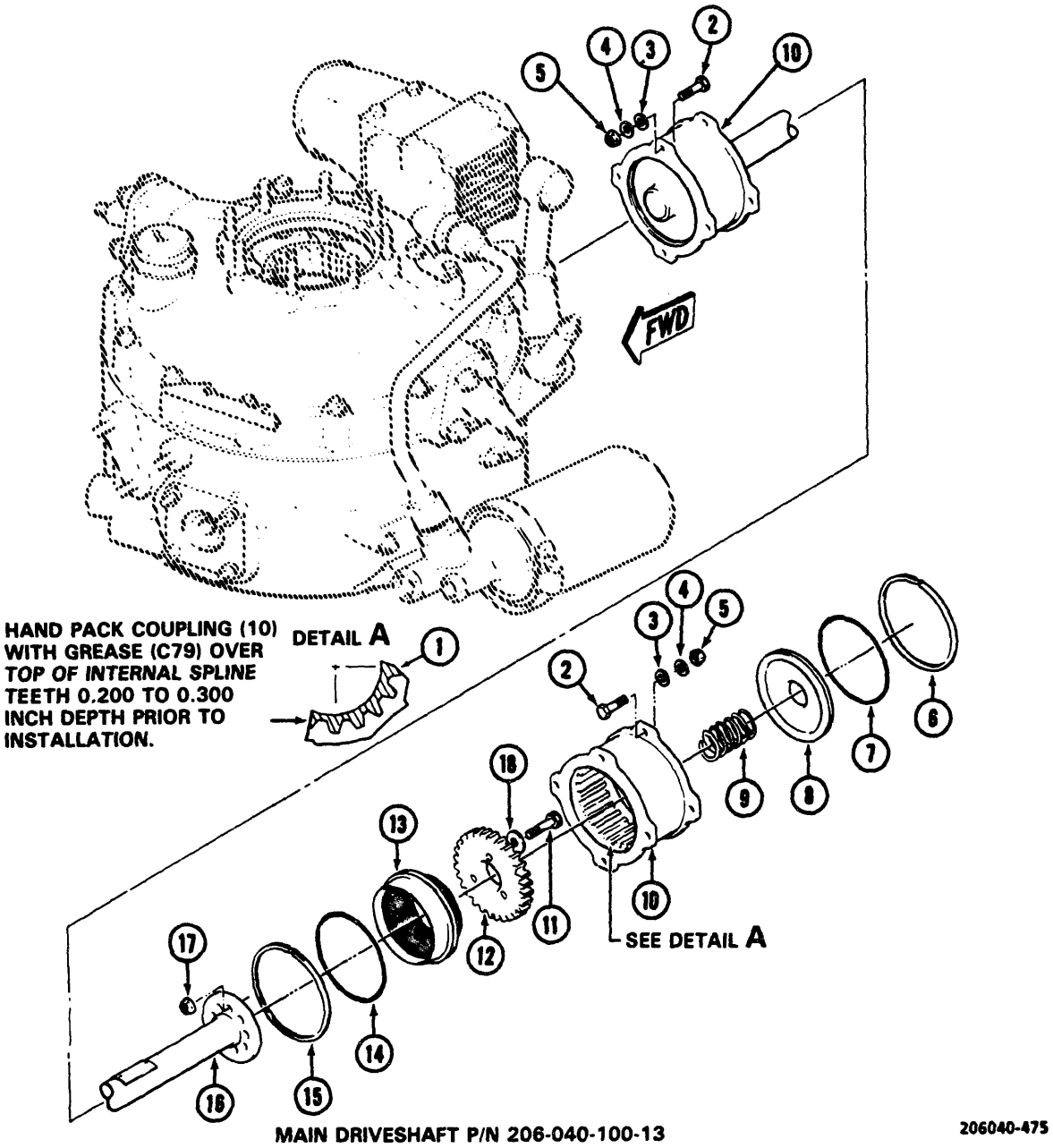

1. Grease
2. Bolt
3. Washer
4. Washer
5. Nut
6. Retainer Ring
7. Packing
8. Plate, Grease Retainer
9. Spring, Shaft Centering
10. Coupling
11. Bolt
12. Spur Gear
13. Seal, Driveshaft Coupling
14. Packing
15. Retainer Ring
16. Main Input Shaft
17. Nut
18. Washer

Figure 6-3. Disassembly — Main Driveshaft

f. Repeat steps b. through e. for disassembly of coupling (10) on opposite end of main input shaft (16).

CAUTION

Do not scratch seal with tools or other rough objects.

g. Remove three bolts (11), washers, (18), and nuts (17) attaching spur gear (12) to flange on main input shaft (16). Hold nut (17) with wrench to prevent nut from turning with bolts and scoring shaft. Release of shaft from spur gear will also release driveshaft coupling seal (13) which is assembled on end of shaft.

h. Repeat above instructions for disassembly of coupling assembly on other end of shaft.

6-12. CLEANING — MAIN DRIVESHAFT.

a. Clean main driveshaft P/N 206-040-100-13.

WARNING

Degreasing Solvent is combustible and toxic to eyes, skin, and respiratory tract. Wear protective gloves and goggles/face shield. Avoid repeated or prolonged contact. Use only in well-ventilated areas (or use approved respirator as determined by local safety/industrial hygiene personnel). Keep away from open flames or other sources of ignition.

CAUTION

Do not use solvent to clean main driveshaft packings or seals.

(1) Clean all parts with clean wiping cloths dampened with degreasing solvent (C62).

(2) If necessary, blow dry all parts with dry filtered, compressed air before assembly.

b. Clean main driveshaft P/N SKCP2348-5.

WARNING

Degreasing Solvent is combustible and toxic to eyes, skin, and respiratory tract. Wear protective gloves and goggles/face shield. Avoid repeated or prolonged contact. Use only in well-ventilated areas (or use approved respirator as determined by local safety/industrial hygiene personnel). Keep away from open flames or other sources of ignition.

(1) Clean all parts with clean wiping cloths dampened with degreasing solvent (C62).

(2) If necessary, blow dry all parts with dry, filtered, compressed air before assembly.

6-13. INSPECTION — MAIN DRIVESHAFT (REMOVED).

a. Inspect main driveshaft P/N 206-040-100-13.

(1) Visually inspect all parts for damage. Inspect the surfaces of coupling (10, figure 6-3) and main input shaft (16) for nicks and scratches. Maximum limits are **0.002** inch deep around entire circumference of **0.005** inch deep, axial or circumferential, but no longer than one-quarter circumference. Dress out acceptable nicks and scratches with sandpaper (C125) as required. Apply epoxy polyamide primer (C116.1) to repaired areas or to all external surfaces including coupling mating surfaces if rework is extensive. Inspect shaft centering spring (9) for a minimum length of one inch with a compression load of **14.5 to 15.5** pounds or a free standing height of **1.900 (±0.100)** inches

(2) Inspect splines of spur gear (12) for chipped, cracked, worn teeth or evidence of overheating. Inspect spur gear for pitting and corrosion. Maximum corrosion depth shall not exceed **0.002** inch. Chips must be cleaned up within the limits of paragraph 6-13, step a. Spur gear wear limits are listed in figure 6-4, sheet 1.

(3) Inspect seal grooves in each end of main input shaft (16) and adjacent surfaces to determine that they are not damaged or corroded and surfaces are smooth. Inspect inside diameter of main input shaft for corrosion and pitting. If inside diameter is corroded, proceed as follows:

WARNING

Degreasing Solvent is combustible and toxic to eyes, skin, and respiratory tract. Wear protective gloves and goggles/face shield. Avoid repeated or prolonged contact. Use only in well-ventilated areas (or use approved respirator as determined by local safety/industrial hygiene personnel). Keep away from open flames or other sources of ignition.

(a) Remove surface corrosion and pitting with sandpaper (C125) or (C126). Sandpaper may be attached to a rotary drill bit, or equivalent. Surface may be wet polished using degreasing solvent (C62). Honing is also an acceptable method for removal of corrosion and minor pitting.

(b) Inside diameter of main input shaft after cleanup must not exceed **0.843** inch. If main input shaft cannot be cleaned up within these limits, it must be replaced.

WARNING

Degreasing Solvent is combustible and toxic to eyes, skin, and respiratory tract. Wear protective gloves and goggles/face shield. Avoid repeated or prolonged contact. Use only in well-ventilated areas (or use approved respirator as determined by local safety/industrial hygiene personnel). Keep away from open flames or other sources of ignition.

NOTE

Inside diameter must be thoroughly abraded, prior to treatment, to ensure good adhesion.

(c) After removal of corrosion and pitting, thoroughly clean inside diameter with degreasing solvent (C62).

(d) Apply epoxy polyamide primer (C116) to the inside diameter by flowing primer into bore while rotating shaft. Place main input shaft in upright position after ensuring complete coverage of inside diameter. Allow to drain and dry. Second coat, after drying, is required.

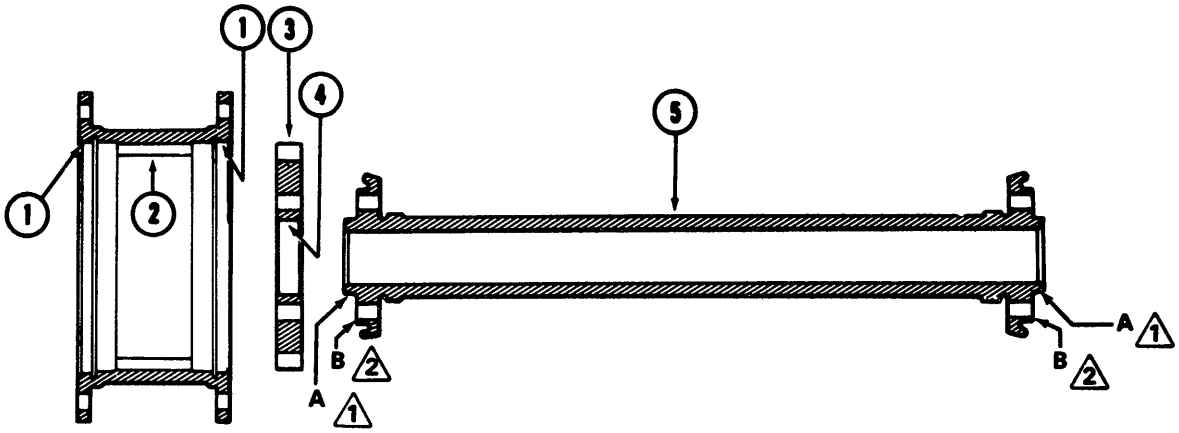

MAIN DRIVESHAFT P/N 206-040-100-13 206040-476-1

ITEM	NOMENCLATURE		REPLACE
1.	Coupling, Adapter Alignment Seat, Spherical Outer	ID	3.4376 Inch
2.	Adapter		2
3.	Spur Gear (Use 0.2057 inch diameter pins)	OVER PINS	3.3814 Inch
4.	Coupling, Shaft Seat, Spherical Inner	ID	1.0915 Inch
5.	Main Input Shaft	OD	1.0880 Inch

NOTES:

1 Surfaces B and B to be square with diameters A and A within 0.001 inch TIR.

2 Maximum allowable depth of wear on face of spline is 0.006 inch determined by measuring from worn to unworn area of spline. To accurately check for excessive wear, a straight edge and wire feeler gage must be used. Refer to figure 6-5.

Figure 6-4. Damage Limits — Main Driveshaft (Sheet 1 of 2)

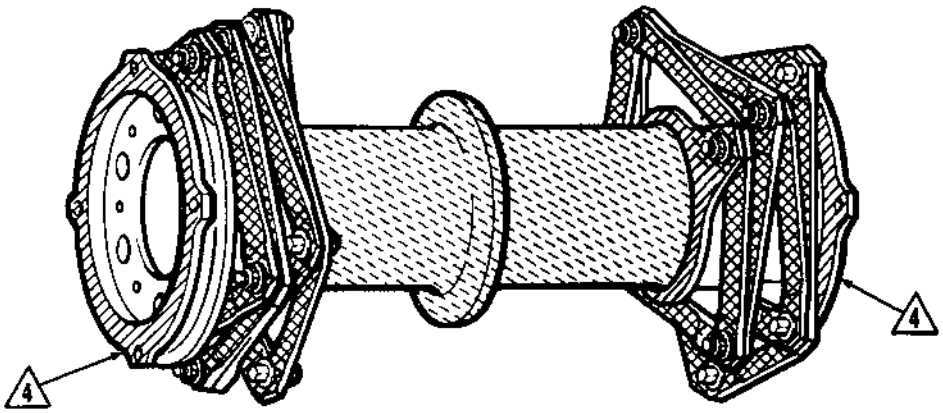

MAIN DRIVESHAFT P/N SKCP 2348-5

MS038432

DAMAGE LOCATION SYMBOLS

TYPE OF DAMAGE		MAXIMUM DAMAGE AND REPAIR DEPTH		
MECHANICAL	0.001 In. before and after repair	0.005 In. before and after repair	0.005 In. before and after repair	0.015 In. before and after repair
CORROSION	Surface, no pits	0.005 In. before and after repair	0.005 In. before and after repair	0.010 In. before and after repair
MAXIMUM AREA PER FULL DEPTH REPAIR	(3) 0.05 Sq. in.	0.10 Sq. in.	(3) 0.25 Sq. in.	0.25 Sq. in.
NUMBER OF REPAIRS	One per leg			
EDGE DENTS, NICKS	0.001 In.	0.010 In.	0.010 In.	0.025 In.

NOTES:

1. No cracks are permitted

2. Repairs must be no less than 1.000 inch apart.

(3) Repairs not to be within 0.500 in. of bolt hole.

(4) Faying surfaces must be free of any raised metal areas.

Figure 6-4. Damage Limits — Main Driveshaft (Sheet 2 of 2)

(4) Roll main input shaft (16) on a flat surface to check for distortion. If main input shaft appears to be distorted, verify by supporting main input shaft between centers and check runout of flanges with a dial indicator. Flange faces (Surfaces B, figure 6-4, sheet 1) to be square within **0.001** inch total indicated reading (TIR).

(5) Inspect spline teeth of outer coupling in accordance with figure 6-5. Position a metal straight edge against the face of the tooth being inspected. Straight edge must be of sufficient length to span entire tooth. Insert a **0.006** inch wire gage (T47) into wear area to determine the amount of wear. Maximum allowable tooth wear is **0.006** inch. The coupling and its mating spur gear may be reversed on the same end of the main input shaft from which it was removed. This will change the drive side of the coupling and spur gear to the coast side, allowing longer use of the coupling assembly. Couplings with wear in excess of **0.006** inch on both sides of teeth shall be replaced. Visually inspect teeth for cracks, chipping, or evidence of overheating. Chips and nicks must be cleaned up within the limits of paragraph 6-13, step a.

(6) As an aid to detect overheating in operation, paint strips may be applied to the coupling (10, figure 6-3) as follows:

WARNING

Acetone is extremely flammable and toxic to eyes, skin, and respiratory tract. Wear protective gloves and goggles/face shield. Avoid repeated or prolonged contact. Use only in well-ventilated areas (or use approved respirator as determined by local safety/industrial hygiene personnel). Keep away from open flames, sparks, hot surfaces or other sources of ignition.

(a) Clean outer surface of coupling (10) with acetone (C2).

NOTE

Inadequate cleaning or contact with oil or grease may cause discoloration and false heat indication.

(b) Mask and spray two 1-inch wide strips 180 degrees apart lengthwise on the O.D. of the coupling with zinc chromate primer (C118), or epoxy polyamid primer (C116).

(7) If overheating of coupling (10) is suspected because of external heat strip indicator or light internal discoloration, examine the external cadmium plating for signs of heat discoloration or blistering. If no external indications are found, the coupling may be considered acceptable.

(8) Limits for corrosion pitting are as follows:

(a) Corrosion on mating surfaces of main input shaft (5, figure 6-4, sheet 1) and spur gear (3) must be cleaned up within the limits shown. Scattered pitting not exceeding **0.002** inch depth is permitted, provided no more than five percent of the mating surface is affected.

(b) Refer to paragraph 6-13, step a. (3)(b), for main input shaft I.D. limits.

(c) Corrosion on spline tooth surfaces must be cleaned up within the wear of paragraph 6-13, step a.(5).

(d) For all other areas, corrosion must be cleaned up within the damage limits of paragraph 6-13, step a.(1).

WARNING

Acetone is extremely flammable and toxic to eyes, skin, and respiratory tract. Wear protective gloves and goggles/face shield. Avoid repeated or prolonged contact. Use only in well-ventilated areas (or use approved respirator as determined by local safety/industrial hygiene personnel). Keep away from open flames, sparks, hot surfaces or other sources of ignition.

NOTE

Replacement of missing or debonded identification plates is not required. There are normally two ID plates located midpoint of the main input shaft, 180 degrees apart. If these plates become debonded or lost, it is not necessary to replace or rebond them.

(9) Inspect driveshaft coupling seals (13, figure 6-3) for condition and replace as necessary. If boot portion of seal becomes detached from metal cone, it is not cause for replacement. Boot may be rebonded to metal cone by lightly sanding surfaces to be bonded with sandpaper (C124) and cleaning the areas with acetone (C2). Apply a bead of cement (C36) to flange of cone and press in place on seal.

(10) Inspect grease retainer plate (8) for damage limits and replace as necessary.

(a) Maximum mechanical damage is **0.010** inch.

(b) Maximum corrosion damage **0.030** inch before cleanup.

(c) No mechanical damage is permitted in packing seat.

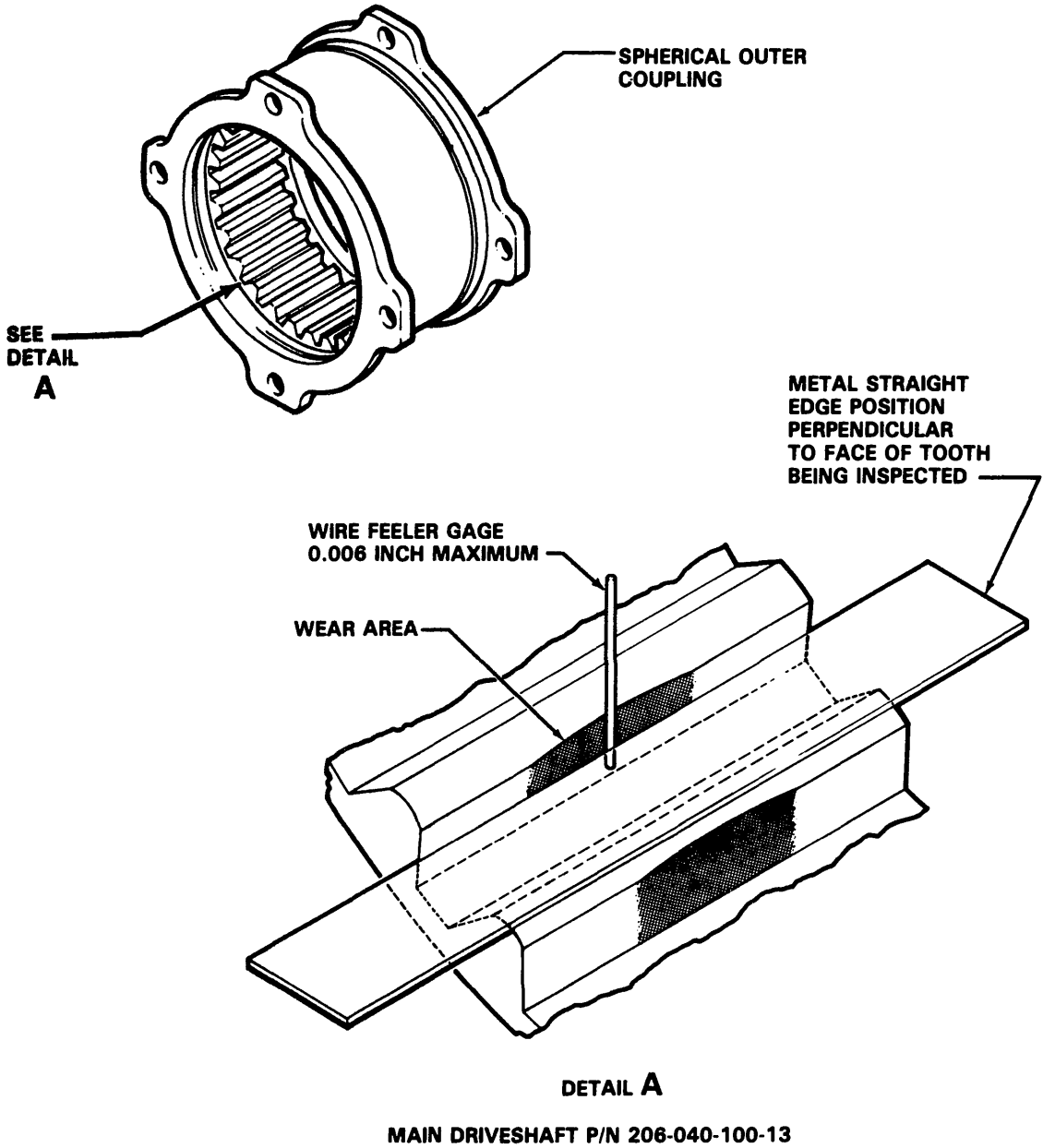

Figure 6-5. Spherical Outer Coupling Spline Teeth — Inspection

(11) Inspect parts listed below and show in figure 6-3, using magnetic particle method (Code M) or fluorescent penetrant method (Code F) if the accompanying records and/or physical appearance of component indicates that the component has been subjected to an accident or incident outside the realm of normal usage. Refer to TM 55-1500-335-23. No cracks allowed. If a crack in any of the listed parts is suspected, refer to TM 1-1520-254-23, Technical Manual Aviation Unit Maintenance (AVUM) and Aviation Intermediate Maintenance (AVIM) Manual Nondestructive Inspection Procedures for OH-58 Helicopter Series.

ITEM NO.	NOMENCLATURE	CODE
8.	Plate, Grease Retainer	F
9.	Spring, Shaft Centering	M
10.	Coupling	M
12.	Spur Gear	M
16.	Main Input Shaft	M

(a) Inspect spring, shaft centering (9, figure 6-3) with circular field using 3/4 inch central conductor, magnetize at 500 amperes.

(b) Inspect coupling, outer (10, figure 6-3) with circular field using 1 inch central conductor, magnetize at 1200 amperes.

(c) Inspect spur gear (12, figure 6-3) with circular field using 1 inch central conductor, magnetize at 1500 amperes.

(d) Inspect shaft (16, figure 6-3) with circular field using 3/4 inch central conductor, magnetize at 1200 amperes. Inspect with longitudinal field at 6000 ampere-turns.

(12) Discard packings (7 and 14) and nuts (17).

b. Inspect main driveshaft P/N SKCP2348-5.

(1) Inspect main driveshaft to damage limits shown in figure 6-4, sheet 2.

CAUTION

Main driveshaft assembly is not to be taken apart, and fasteners are not to be disturbed. Disassembly or disturbing fasteners is cause for replacement.

NOTE

Minimize removal of protective coating during repair. Repair must be within limits shown.

(2) Repair by removing corrosion and damage using abrasive pads (C154).

(3) Damage to protective coating (removal) of base metal may be touched up with zinc chromate primer (C118) and top coated with silver sermetel paint (C156).

NOTE

Areas left bare, smaller than damage limits shown, will not corrode due to sacrificial properties of original protective coating.

6-14. ASSEMBLY — MAIN DRIVESHAFT P/N 206-040-100-13.

a. Position retainer ring (15, figure 6-3) loosely over main input shaft (16). It will be used later to retain driveshaft coupling seal (13) in coupling (10).

b. Apply a light coating of grease (C79) to packing (14) and install in groove on outer edge of driveshaft coupling seal (13). Install rubber portion of driveshaft coupling seal (13) in groove on main input shaft (16).

CAUTION

The main driveshaft has both lightening holes and bolt holes. Ensure holes in spur gear are aligned with the three smaller holes in the driveshaft.

c. Secure spur gear (12) to main input shaft (16) using three bolts (11), washers (18), under bolt heads only, and nuts (17). Hold nuts (17) with wrench to prevent turning and scoring shaft. Torque bolts (11) **50 TO 70 INCH POUNDS**.

d. Apply a light coating of grease (1) (C79) to packing (7) and install in groove of grease retainer plate (8). Install grease retainer plate (8) in coupling (10) and secure with retainer ring (6).

e. Repeat steps a. through d. on opposite end of main input shaft (16).

f. Evenly distribute grease (C79) over spline teeth of couplings (10) to a depth of **0.200 to 0.300** inch. Refer to figure 6-3, detail A. Use work aid (figure 6-6) to smooth grease (C79).

g. Place couplings on work bench with open end up. Install shaft centering spring (9, figure 6-3) in the depression of the grease retainer plate (8).

NOTE

Coupling and spur gear shall be indexed together, but may be installed reversed as a unit in the same position relative to transmission or freewheeling unit from which it was removed. Refer to previously applied index marks.

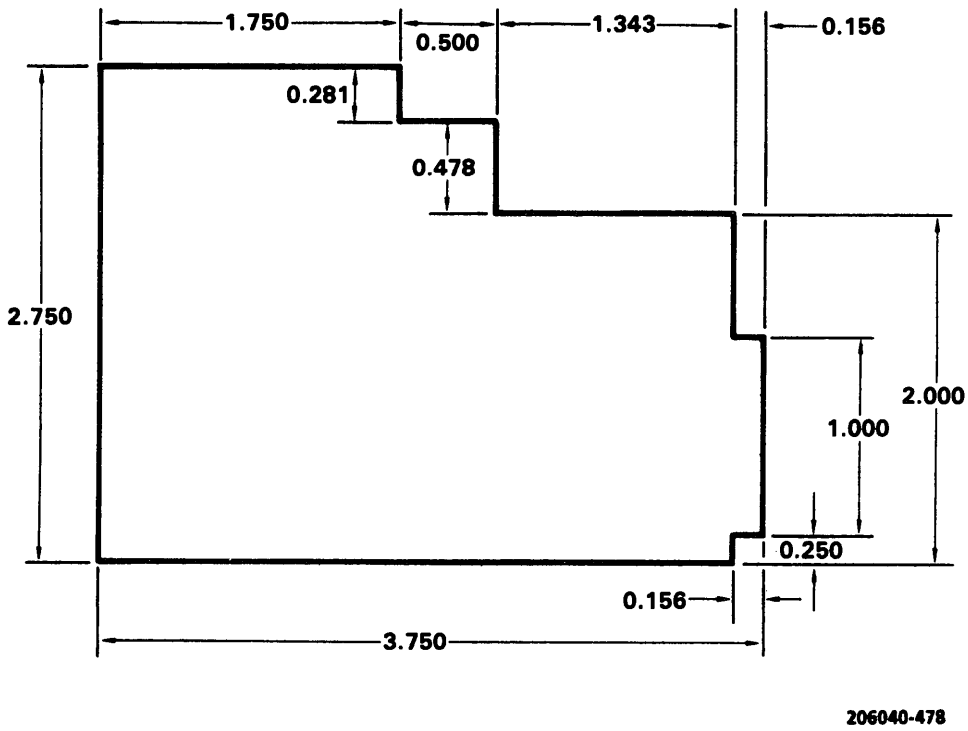

NOTES:

1. All dimensions are in inches.
2. Make work aid from plexiglass.

Figure 6-6. Work Aid For Coupling Grease Distribution

CAUTION

Do not force spur gear into the coupling any further than necessary to seat the driveshaft coupling.

h. Install spur gear (12) into the coupling (10) while supporting driveshaft coupling seal (13) to ensure proper installation into coupling (10). When driveshaft coupling seal (13) is properly seated, secure with retainer ring (15).

i. Repeat step h. on opposite end of main input shaft (16).

NOTE

If main driveshaft will not be immediately installed, cut strips of cardboard or wood (or any other suitable work aid that will not damage the assembly) of sufficient length to fit between the couplings. This work aid will prevent the collapse of the couplings and subsequent displacement of grease.

6-15. INSTALLATION — MAIN DRIVESHAFT.

a. Install main driveshaft P/N 206-040-100-13.

(1) Move main driveshaft (16, figure 6-2, sheet 1) forward, passing forward coupling through opening in forward firewall (15). Place aft coupling on freewheeling unit adapter flange and push aft on forward coupling to compress springs. Move main driveshaft (16) inboard to position forward coupling on transmission input quill adapter flange.

(2) Align forward coupling attachment bolt holes and install four bolts (3), eight washers (2), and four nuts (1). Using torque adapter (T4), torque nuts **50 TO 70 INCH-POUNDS**.

NOTE

Install washers (2) and (10) under nuts (1) and (11) as shown in figure 6-2. Do not install washers under the head of bolts, (3) and (9). Do not allow heads of bolts (3) and (9) to rotate when tightening or torquing nuts. Ensure that hex point of bolts do not contact coupling surface.

(3) Align aft coupling attachment bolt holes and install four bolts (9), eight washers (10), and four nuts (11). Using torque adapter (T4), torque nuts **50 TO 70 INCH-POUNDS**.

(4) Install driveshaft door (5) and gasket (4) on aft side of forward firewall (15) with 11 screws (14).

WARNING

Both sections of driveshaft cover must be installed prior to flight as it is part of the forward firewall.

(5) Bond gaskets (7) to driveshaft cover (8) with proseal 890 (C17) prior to installation of cone assembly (18) to the driveshaft door (5).

(6) Ensure there is adequate clearance between the lip of the driveshaft cover (8) and the main driveshaft assembly (16). A maximum of **0.260** inch may be filed from lip cover to ensure clearance.

(7) Install driveshaft cover (8) on driveshaft door (5) with two screws (6).

(8) Install transmission fairing and engine cowling. Refer to paragraph 2-39 **A** or 2-40 **C**.

b. Install main driveshaft P/N SKCP2348-5.

NOTE

Original firewall cover (8) and cone assy., (18) cannot be used with drive shaft SKCP2348-5. Remove 7 rivets securing right side of cover (8) to door (5). Position new cover (25) 206-062-902-101 on aft side of door with flange forward and locate rivets. Remove cover, drill rivet holes, and dimple upper rivet hole to clear dimple on door (rivet in this location is flush to allow door to fit on firewall). Install right side of cover (25) on door with 6 rivets MS20613-3C (3/32 Univ. head CRES) and 1 rivet MS20427M3 (3/32 flush Monel). Remove left half of cover assy. (8) from firewall by removing 4 screws (24).

(1) Install work aid (35, figure 6-2, sheet 3) by positioning lugs of the two tightening screws over head of flexframe nut (36) at aft end of main driveshaft (26).

(2) Place the two split-halves of work aid (35) over main driveshaft (26) and attach tightening screws with wing nuts.

CAUTION

Main driveshaft should be compressed only to the extent necessary for installation to avoid damage.

(3) Compress main driveshaft (26) by turning wing nuts of work aid (35).

(4) Install main driveshaft (26) between transmission input quill adapter (29) and freewheeling unit adapter (32).

NOTE

To facilitate future maintenance and inspections, install main driveshaft so the Serial No. is visible from the aft side. Install main driveshaft through door on right side of cowling or remove transmission cowling.

(5) Line up bolt holes in aft fitting of main driveshaft (26) with freewheeling unit adapter (32) bolt holes.

NOTE

To aid in alignment, a bolt can be installed through driveshaft fittings, transmission input quill adapter, and freewheeling unit adapter before work aid is removed.

(6) Remove work aid (35) from main driveshaft (26).

NOTE

Install washers under nuts as shown. Do not install washers under head of bolts.

(7) Install four bolts (31, figure 6-2, sheet 2) through aft fitting of main driveshaft (26) and freewheeling unit adapter (32). Install eight washers (33) and four nuts (34). Torque nuts (34) **50 TO 70 INCH-POUNDS**.

NOTE

(8) Install four bolts (30) through forward fitting of main driveshaft (26) and input quill adapter (29). Install eight washers (28) and four nuts (27). Torque nuts (27) **50 TO 70 INCH-POUNDS**.

WARNING

Both sections of driveshaft cover must be installed prior to flight as it is part of the forward firewall.

(9) Install driveshaft cover assembly and gasket (25).

(a) Install closure plate and gasket (21) on aft side of forward firewall (22). Secure closure plate and gasket (21) with screws (19).

(b) Install new driveshaft cover (25) P/N 206-062-902-103 on left side of the forward firewall (22) and secure with screws (24) and washers (23).

(10) Install tube extending from bottom of centrisep to firewall mounted tee on forward side of forward firewall (22).

(11) Close and secure engine cowling. Reinstall transmission cowling if removed.

6-16. SEALS (MAIN DRIVESHAFT P/N 206-040-100-13).

6-17. DESCRIPTION — SEALS. Preformed spherical drive-shaft coupling seals (13, figure 6-3), grease retainer plate (8), and packing (7) are grease retaining components of the flexible coupling (10) installed on each end of the main driveshaft. Couplings are serviced with grease (C79) as required in figure 6-3.

6-18. INSPECTION — SEALS. Inspect seals for cuts, tears, and general deterioration.

6-19. REMOVAL — SEALS. Refer to paragraph 6-11.

6-20. REPAIR/REPLACEMENT — SEALS.

a. Replace seals as necessary with like serviceable item.

b. Metal cone becoming detached from boot of drive-shaft coupling seal (13, figure 6-3) is not cause for replacement. Rebond with cement (C36).

6-21. INSTALLATION — SEALS. Refer to paragraph 6-14.

SECTION II. CLUTCHES

6-22. FREEWHEELING ASSEMBLY.

6-23. DESCRIPTION — FREEWHEELING ASSEMBLY. The freewheeling unit is mounted on the engine gearbox and its shaft is splined directly to the power take-off gear shaft. Engine power is transmitted to the outer race of the freewheeling assembly, then through the full-phasing sprag elements of the unit which couples the outer race to the inner race shaft. The inner shaft adapts to the transmission driveshaft and the tail rotor driveshaft to provide power to the main and tail rotors respectively. During autorotation the main rotor drives the tail rotor through the inner shaft while the sprag clutch provides a disconnect to the outer race and hence the engine. The freewheeling assembly is lubricated from the transmission lubrication system. Lubrication oil is metered through an orifice fitting, through flexible hoses, to the aft freewheeling assembly housing. After the oil has flowed forward through the freewheeling shafts to the forward housing, it is pumped, by centrifugal action of the outer race, through a flexible return hose to the transmission sump.

Premaintenance Requirements for Maintenance of Freewheeling Assembly

Condition	Requirements
Model	OH-58A/C
Part No. or Serial No.	All
Special Tools	(T32)
Test Equipment	Eddy Current Inspection Unit Magnetic Particle Inspection Unit
Support Equipment	Heat Lamp
Minimum Personnel Required	Two
Consumable Materials	(C6) (C51) (C55) (C59) (C62) (C84) (C101) (C103) (C118) New Packings
Special Environmental Conditions	None
References	TM 1-1520-254-23

6-24. INSPECTION — FREEWHEELING ASSEMBLY (INSTALLED).

a. Inspect vent assembly, lubrication fittings, seals, and hoses for leakage and security.

NOTE

Oil leakage at the aft bearing cap of the freewheeling unit shall not exceed one drop per minute and leakage at the forward seal shall not exceed two drops per minute.

b. Inspect housing for cracks and security of attachment. No cracks allowed. If a crack in the freewheeling assembly housing is suspected, refer to TM 1-1520-254-23, Technical Manual Aviation Unit Maintenance (AVUM) and Aviation Intermediate Maintenance (AVIM) Manual Nondestructive Inspection Procedures for OH-58 Helicopter Series.

6-25. REMOVAL — FREEWHEELING ASSEMBLY.

a. Remove forward short tail rotor driveshaft. Refer to paragraph 6-132.

b. Remove engine to transmission driveshaft. Refer to paragraph 6-10.

c. Remove drain plug (1, figure 6-7) and drain oil from freewheeling unit.

d. Disconnect input oil line from reducer (27) on side of housing (7) on aft end of engine accessory gearbox. Cap or plug openings.

e. Remove cotter pin (2), nut (3), and washer (4) from aft end of freewheeling shaft. Hold front flange with holding tool (T32).

f. Remove nuts (5) and washers (6) securing aft bearing housing (7) to aft end of engine accessory gearcase.

g. Remove tail rotor drive gear (8) and aft bearing housing (7) together.

h. Remove stud nuts (11) and washers (12) securing freewheeling forward bearing cap to freewheeling case.

i. Tap aft end of shaft with plastic mallet to remove freewheeling assembly from housing.

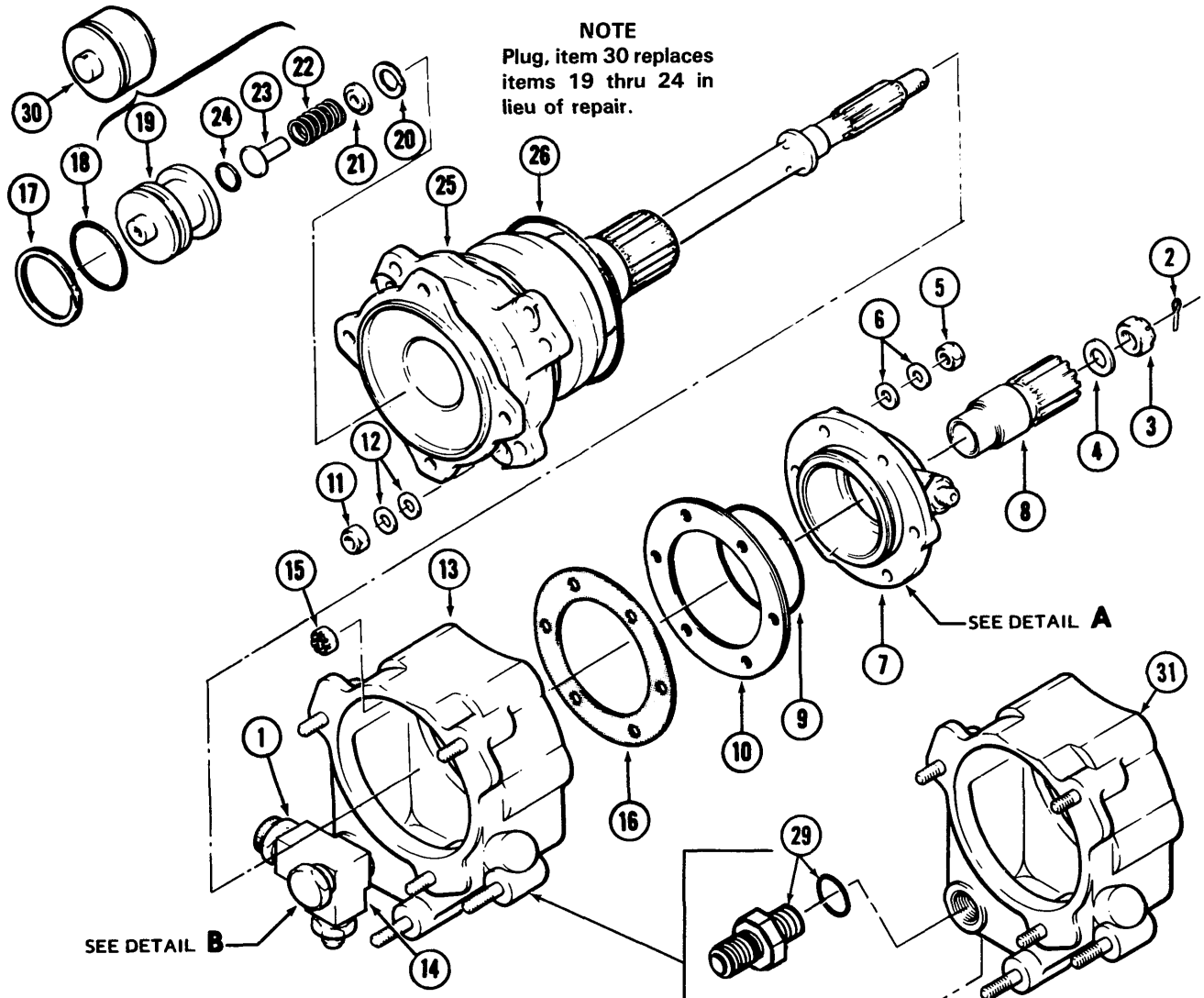

1. Drain Plug and Packing
2. Cotter Pin
3. Nut
4. Washer
5. Nut
6. Washers
7. Aft Bearing Housing
8. Tail Rotor Drive Gear
9. Packing
10. Shim
11. Nut
12. Washers
13. Freewheeling Housing (206-040-236-5)
14. Lubrication Fitting
15. Nut
16. Gasket
17. Retainer Ring
18. Packing
19. Vent Valve Housing
20. Retainer Ring
21. Washer
22. Spring
23. Valve
24. Packing
25. Freewheeling Shaft Assembly
26. Clinch Nut
27. Reducer and Packing
28. Bolt and Packing
29. Union and Packing
30. Plug
31. Freewheeling Housing (206-040-236-9)

206040-479-1

Figure 6-7. Freewheeling Assembly (Sheet 1 of 2)

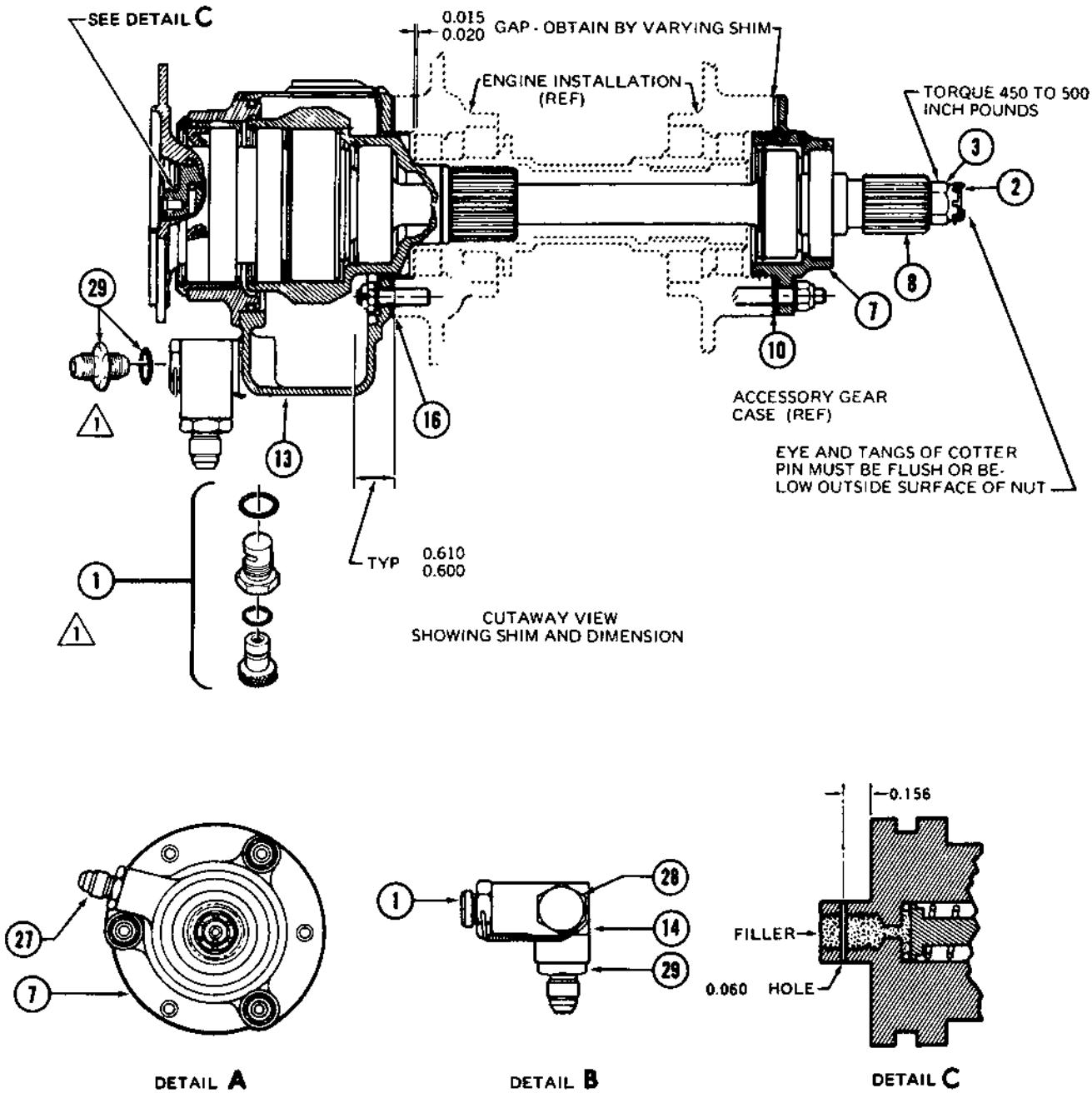

NOTES:

1. Used on 206-040-238-9 Housing Assembly.
2. All dimesions are in inches.

206040-479-2

Figure 6-7. Freewheeling Assembly (Sheet 2 of 2)

NOTE

The freewheeling shaft assembly (25) is an assembly of components comprised of freewheeling inner race shaft with plug in forward end, forward bearing and seal cap assembly, freewheeling outer race shaft with bearings and clutch assembly. This assembly is removed from freewheeling housing and engine accessory gearbox as a unit. Removal of the freewheeling housing is not recommended unless it is necessary for engine gearbox seal replacement, change of engine or inspection, repair or replacement of the housing.

6-26. CLEANING — FREEWHEELING ASSEMBLY.

WARNING

Degreasing Solvent is combustible and toxic to eyes, skin, and respiratory tract. Wear protective gloves and goggles/face shield. Avoid repeated or prolonged contact. Use only in well-ventilated areas (or use approved respirator as determined by local safety/industrial hygiene personnel). Keep away from open flames or other sources of ignition.

a. Clean all parts with degreasing solvent (C62). Dry with dry air.

b. Do not permit bearings to spin when drying with compressed air.

6-27. INSPECTION — FREEWHEELING ASSEMBLY. Inspect the freewheeling assembly after cleaning for the following:

NOTE

Parts should be inspected immediately after cleaning. Exercise care to avoid getting fingerprints on bearing surfaces.

a. If freewheeling assembly has been subjected to an overtorque or sudden stoppage, remove assembly and refer to AVIM. If overtorque or sudden stoppage has not occurred, proceed with inspection procedures.

b. Check for mechanical damage to the external surfaces of the assembly and housing.

c. Inspect parts for nicks and scratches. Dress out minor nicks and scratches and apply protective coating where required.

d. Check for free rotation of the input drive and proper operation of the freewheeling clutch, turning the unit by hand. If aft seal (37, figure 6-8) is leaking replace seal and inspect bearings (33, figure 6-8) per paragraph 6-27, step e.

e. Check bearing (33, figure 6-8) for flat or rough spots by holding tail rotor drive gear (38) and rotate housing (34) with bearing installed.

f. Visually inspect splines for wear, cracks, and damage. When wear is indicated, refer to figure 6-9.

6-28. DISASSEMBLY — FREEWHEELING ASSEMBLY. (AVIM)

a. Remove retaining ring (1, figure 6-8) from end of shaft (9). Remove vent valve housing (3) or plug (41) (whichever is installed) with packing (2).

b. Rework vent valve housing (3) in accordance with paragraph 6-31.

c. Apply heat lamp to rear area of outer race shaft (25). When thoroughly heated, tap unit on aft end of inner race shaft (9) on a block of wood to push shaft (9) from cap (13) and outer race shaft (25).

d. Remove retaining ring (15) from outer race shaft (25).

e. Remove packing (26) from outer race shaft (25).

f. Obtain a sleeve for use as a support to support end of outer race shaft (25) while removing bearing (16), guide ring (17), and clutch (18). The sleeve must be of suitable diameter to support end of shaft with I.D. of sleeve larger than O.D. of bearing and clutch. Apply heat lamp to outer race shaft (25). When shaft is thoroughly warm, hold support sleeve against outer end of shaft and bounce sleeve and shaft on a block of hardwood to remove bearing (16), guide ring (17), and clutch (18).

g. Remove retaining ring (19) from outer race shaft (25). Apply heat to shaft and bounce end of shaft on a hardwood block to remove bearing (24).

h. Disassemble forward bearing and seal cap (13) as follows:

(1) Remove packing (14) from cap (13).

(2) Remove retaining ring (10) from cap (13) and remove seal (11).

(3) Apply heat to cap (13) and remove bearing (12). Bearing should slide out with finger pressure.

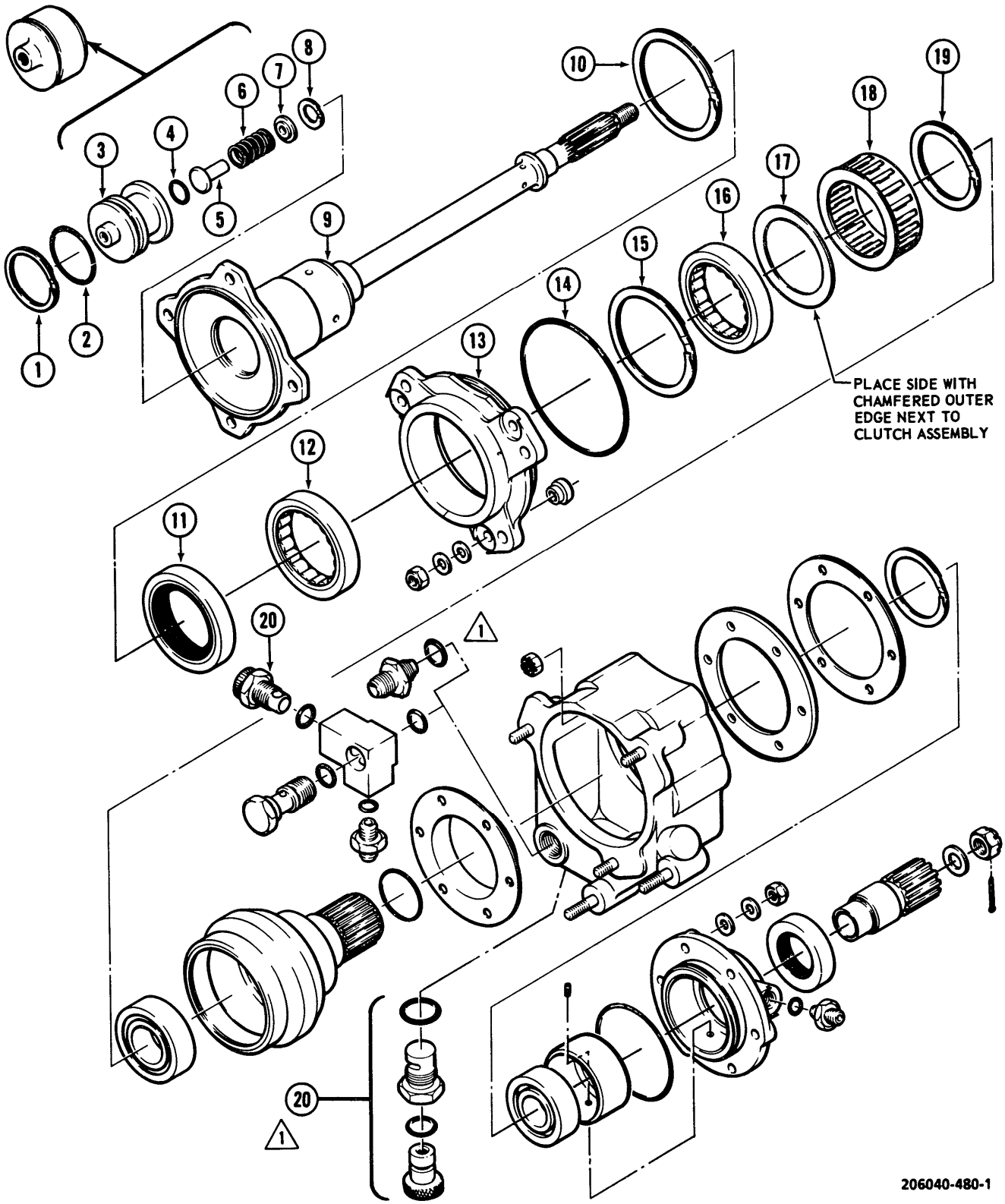

Figure 6-8. Freewheeling Assembly — Exploded View (Sheet 1 of 3)

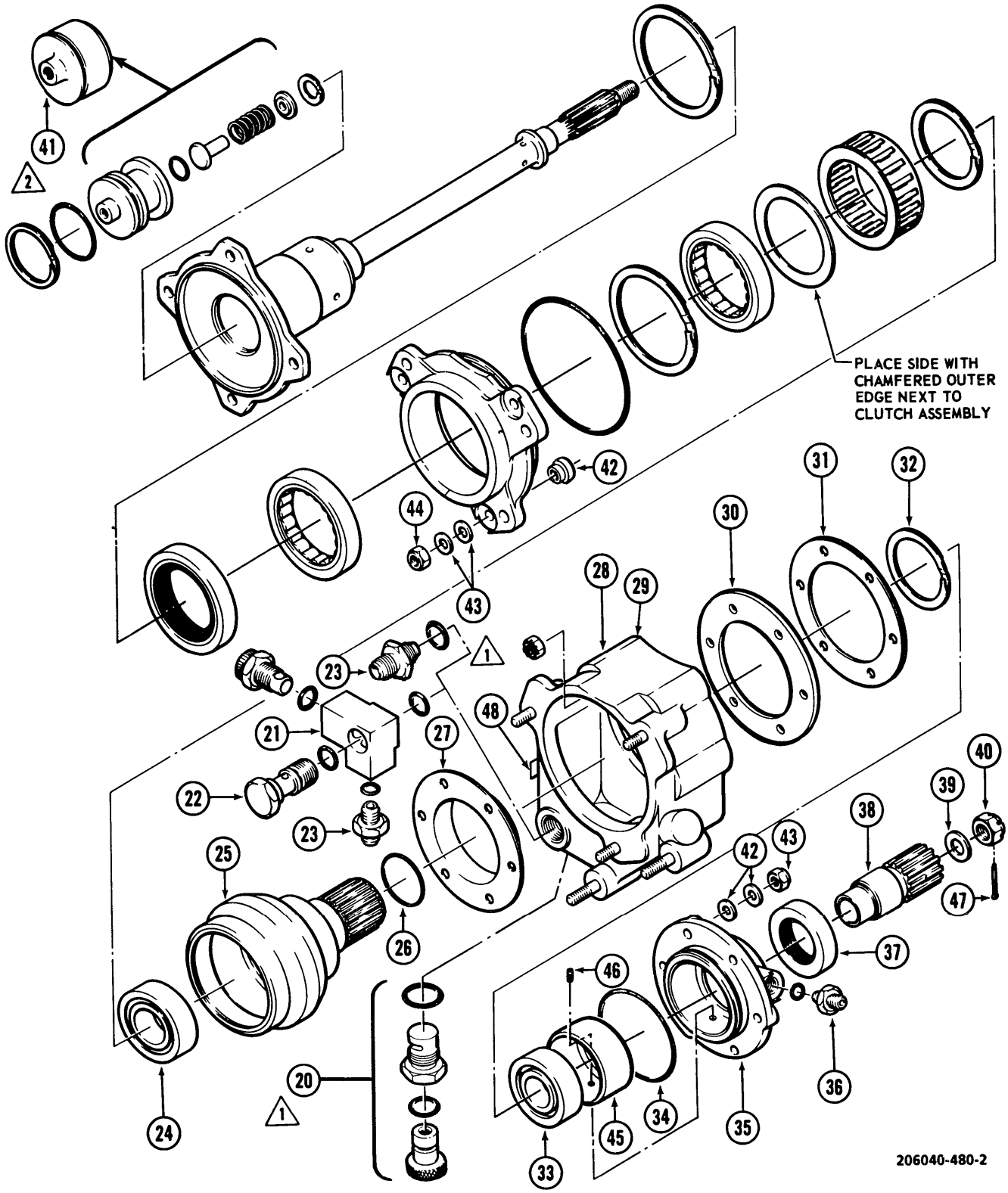

Figure 6-8. Freewheeling Assembly — Exploded View (Sheet 2 of 3)

1. Retaining Ring
2. Packing
3. Valve Housing, Vent Assembly
4. Packing
5. Vent Valve
6. Valve Spring, Vent Assembly
7. Washer, Vent Assembly
8. Retaining Ring
9. Gearshaft
10. Retaining Ring
11. Seal
12. Bearing, Roller
13. Cap
14. Packing
15. Retaining Ring
16. Bearing, Roller
17. Guide Ring
18. Clutch Assembly, One Way
19. Retaining Ring
20. Drain Plug and Packing
21. Lubrication Fitting
22. Bolt and Packing
23. Union and Packing
24. Bearing, Ball
25. Gearshaft
26. Packing
27. Housing Bushing
28. Housing, Freewheeling (206-040-236-5)
29. Housing, Freewheeling (206-040-236-9)
30. Gasket
31. Shim
32. Retaining Ring
33. Bearing
34. Packing
35. Bearing Housing
36. Reducer and Packing
37. Seal
38. Tail Rotor Drive Gear
39. Washer
40. Nut
41. Plug
42. Nut, Clinch
43. Washer, Flat
44. Nut, Self-locking
45. Bearing Liner
46. Pin
47. Cotter Pin
48. Identification Plate

NOTES:

1 Used on Housing, Freewheeling, P/N 206-040-236-9.

2 Plug, item 41, replaces item 3 through 8 in lieu of repair.

Figure 6-8. Freewheeling Assembly — Exploded View (Sheet 3 of 3)

i. Disassemble aft bearing housing (35) as follows:

(1) Remove packing (34) from aft bearing housing.

(2) Remove retaining ring (32) from housing.

(3) Apply heat lamp to housing and press tail rotor drive gear (38) with bearing (33) from housing.

CAUTION

If bearing inner race is not properly supported during drive gear removal, damage may occur requiring bearing replacement.

(4) Support bearing (33) inner race and press drive gear (38) from bearing.

(5) Remove seal (37) from housing (35).

(6) Remove reducer fitting and packing (36).

6-29. INSPECTION — FREEWHEELING ASSEMBLY. (AVIM)

NOTE

Exercise care to avoid corrosion to bearing surfaces, and avoid getting fingerprints on bearing surfaces. Oil parts immediately after inspection using lubricating oil (C103).

a. Visually inspect all parts for wear or damage.

b. Visually inspect splines of shafts for chipped, broken, or worn teeth.

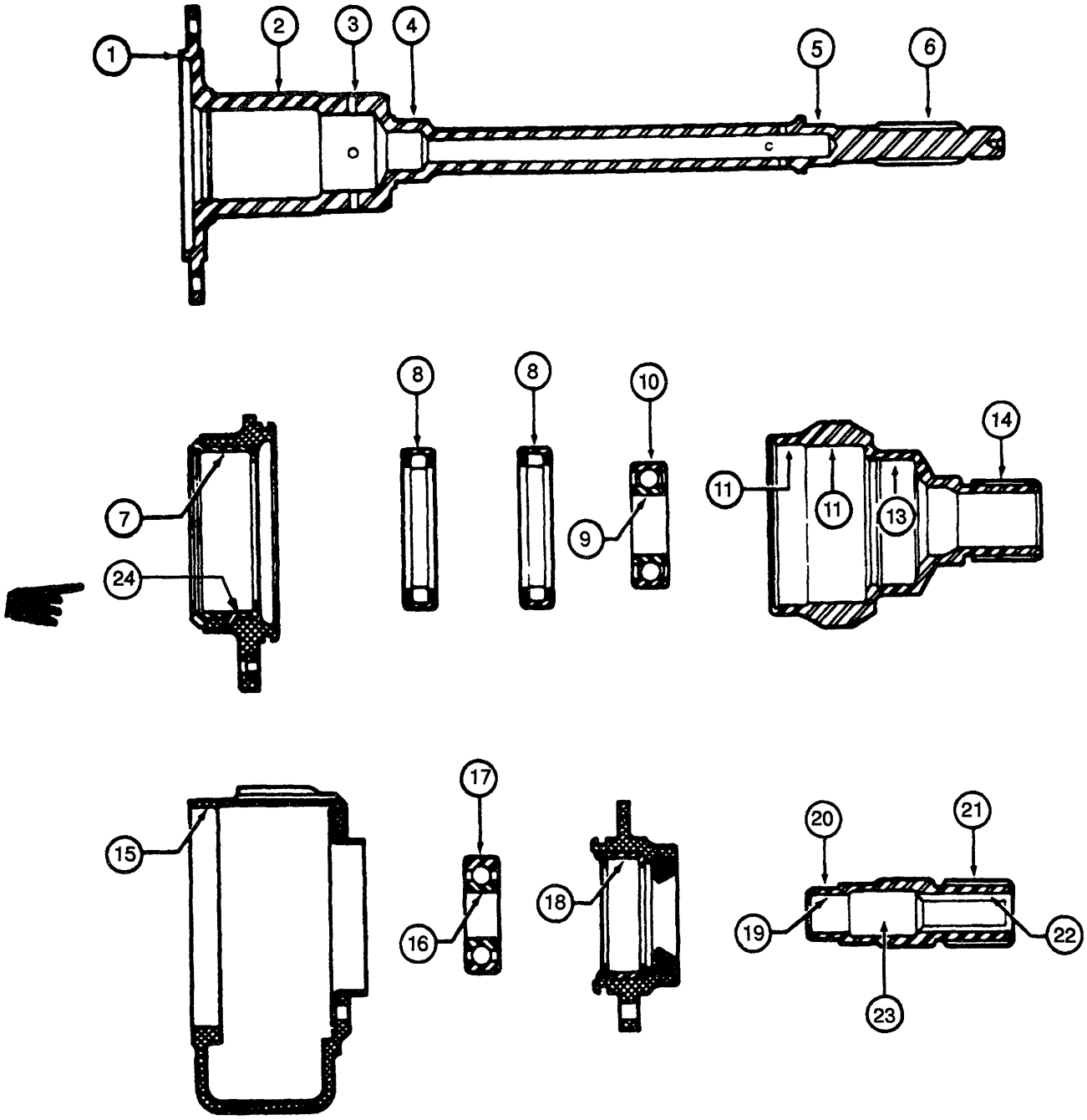

Figure 6-9. Limit Chart — Freewheeling Assembly (Sheet 1 of 2)

ITEM	NOMENCLATURE		REPLACE
1.	Shaft — Drive Shaft Adapter Shoulder — Pilot Dia	OD	3.4345
2.	Shaft — Seal and Forward Bearing — Inner Race (See Note)	OD	2.0010
3.	Shaft — Clutch Inner Race	OD	1.9569
4.	Shaft — Inner Bearing Set	OD	0.9841
5.	Shaft — Tail Rotor Drive Adapter	OD	0.6325
6.	Shaft — Spline (use 0.1200 diameter pins)	OVER PINS	0.7279
7.	Cap — Bearing Seat — Freewheeling Unit	ID	2.6774
8.	Bearing — Forward Roller (Two Required)	OD	2.6767
9.	Bearing — Forward Ball	ID	0.9844
10.	Bearing — Forward Ball	OD	2.0467
11.	Shaft — Forward roller Bearing Seat — Outer Bearing	ID	2.6774
12.	Shaft — Clutch Outer Race	ID	2.6145
13.	Shaft — Ball Bearing Seat	ID	2.0473
14.	Shaft — Spline 99 (use 0.0960 diameter pins)	OVER PINS	1.3446
15.	Housing — Bearing and Seal Cap Seat	ID	3.6281
16.	Bearing — Aft	ID	0.7875
17.	Bearing — Aft	OD	1.8500
18.	Housing — Bearing Seat	ID	1.8506
19.	Adapter — Tail Rotor Drive	ID	0.6360
20.	Adapter — Bearing Seat — Tail Rotor Drive	ID	0.7874
21.	Adapter — Spline — Tail Rotor Drive (use 0.1200 diameter pins)	OVER PINS	1.1070
22.	Adapter — Spline — Tail Rotor Drive (use 0.1080 diameter pins)	BETWEEN PINS	0.3979
23.	Adapter — Seal Seat — Tail Rotor Drive	OD	1.0580
24.	Cap-Seal Seat-Freewheeling Unit	ID	2.6920

NOTE: Maximum allowable wear in roller bearing path on the diameter is 0.0002 inch, determined by the difference in the diameter in the worn and unworn areas.

Figure 6-9. Limit Chart — Freewheeling Assembly (Sheet 2 of 2)

c. Visually inspect roller bearing inner race area and clutch bearing areas on shafts (9 and 25, figure 6-8) for corrosion, wear, brinelling, or other damage.

d. Visually inspect clutch assembly (18) for wear, brinelling, or other damage.

e. Inspect bearings (24 and 33) for smoothness and freedom of rotation by holding inner race and rotating outer race by hand.

f. Inspect all parts for damage and/or wear in excess of allowable limits. Refer to figure 6-9.

g. Inspect the following parts by magnetic particle (code M) for fluorescent penetrant (code F) method. Refer to TM 55-1500-335-23. No cracks allowed. If a crack in any of the listed parts is suspected, refer to TM 1-1520-254-23, Technical Manual Aviation Unit Maintenance (AVUM) and Aviation Intermediate Maintenance (AVIM) Manual Nondestructive Inspection Procedures for OH-58 Helicopter Series.

ITEM NO.	NOMENCLATURE	CODE
9	Gearshaft, Inner Race	M
13	Cap, Bearing and Seal	F
25	Gearshaft, Outer Race	M
35	Bearing Housing	F
38	Tail Rotor Drive Gear	M

(1) Inspect gearshaft, inner race (9, figure 6-8) using direct electrical contact with copper braided pads. Magnetize gear drive at 500 amperes, shaft mount at 1200 amperes. Inspect with longitudinal field at 6000 ampere-turns.

(2) Inspect gearshaft, outer race (25, figure 6-8) with circular field using 3/4 inch central conductor. Make two (2) equally spaced shots (180 degrees apart) at 1200 amperes.

(3) Inspect tail rotor drive shaft (38, figure 6-8) with circular field using 1/2 inch central conductor at 600 amperes.

NOTE

All parts must be demagnetized after magnetic particle inspection.

h. Visually inspect bearings (balls or rollers and races) for spalling, scoring, brinelling, or corrosion damage. Replace bearings which are rough, spalled, scored, pitted, flaked, or corroded.

6-30. REPAIR — FREEWHEELING ASSEMBLY. (AVIM)

a. Replace parts that are cracked, broken, warped, distorted, have malformed threads, or have corrosion damage in critical areas which would affect the function or structural integrity of the part.

b. Replace all parts that exceed the allowable tolerances in figure 6-9.

c. Repair minor nicks, scratches, or pits on non-critical surfaces with crocus cloth (C55).

d. Replace broken, bent damaged, or loose studs. Inspect threaded holes in housing.

6-31. REWORK — FREEWHEELING ASSEMBLY VENT ASSEMBLY. (AVIM)

WARNING

Acetone is extremely flammable and toxic to eyes, skin, and respiratory tract. Wear protective gloves and goggles/face shield. Avoid repeated or prolonged contact. Use only in well-ventilated areas (or use approved respirator as determined by local safety/industrial hygiene personnel). Keep away from open flames, sparks, hot surfaces or other sources of ignition.

NOTE

When available, plug (41, figure 6-8) should be installed in lieu of reworking vent assembly.

a. With vent assembly removed, clean threaded hole with degreasing solvent (C62).

b. Fill center hole (forward end) with adhesive (6) and allow to cure for **24** hours at room temperature. (See detail C, figure 6-7.)

c. Drill a **0.060** inch diameter hole through lip around center hole approximately **0.156** inch from valve housing ring. (This hole is to facilitate later vent assembly removal.)

6-32. ASSEMBLY — FREEWHEELING ASSEMBLY. (AVIM)

NOTE

During assembly, install new packings and lubricate all bearings, races, shafts, packings, seals, and clutch with lubricating oil (C103).

a. Apply heat lamp to outer race shaft (25, figure 6-8).

b. Lubricate inner surface of shaft (25) and outer race surface of bearing (24). Using a suitable block on outer race of bearing (24), press bearing into outer shaft (25) and install retaining ring (19).

c. Assemble clutch as follows:

(1) If clutch assembly (X136028) is to be installed, obtain a sheet of soft aluminum sheet stock (approximately **0.300** inch in thickness) to place in shaft (25) in first bearing bore. The stock must be thick enough so that when the strip is coiled one turn in first bearing bore, the I.D. will be slightly smaller than the I.D. of clutch seat (ends must not overlap). Lubricate clutch (18) and position inside coiled aluminum strip with clutch flanges outboard. Work clutch sprags in one at a time. When all sprags are positioned inside coiled aluminum strip, push clutch (18) into shaft (25) as far as it will go. Remove aluminum sheet stock.

(2) If clutch assembly (18) CL41742 or CL42250-1 is to be installed, set cage on clean work area with arrow etched on cage pointing clockwise and install lower spring. Position all sprags in place over the lower spring. Take top spring in both hands and fit it into the top slots of the sprags. This will push all sprags into position within the cage.

NOTE

If one or two sprags come loose, check adjoining sprags for correct position and the upper and lower springs for deformation.

(3) Install CL41742 or CI42250-1 clutch assembly (18) with arrow etched on cage pointing clockwise as viewed from open end of gear shaft (25). Push clutch assembly into gear shafts with hand pressure until fully seated with all sprags properly positioned.

d. Install guide ring (17) with chamfered outer edge inboard, next to clutch assembly (18).

e. Using a suitable block on outer race of bearing (16), press lubricated bearing into place in outer end of gear shaft (25) and install retaining ring (15).

f. Assemble forward bearing and cap (13) as follows:

(1) Apply heat lamp to cap (13) and using a suitable block on the outer race, press bearing (12) through the forward side of the cap as far as it will go.

(2) Press seal (11) in forward side of cap and install retaining ring (10).

(3) Position new packing (14) in groove in aft side of cap (13).

g. Lubricate and position new packing (2) on reworked vent valve housing (3) or plug (41) and install in forward end of inner race shaft (9). Install retaining ring (1).

h. Lubricate lip of seal (11) with lubricating oil (C103) and position assembled bearing and seal cap (13) on inner race shaft (9), next to adapter plate on forward end of shaft.

i. Lubricate clutch assembly (18) with lubricating oil (C103) and press assembled outer gearshaft (25) onto inner gearshaft (9).

j. Install new packing (26) in groove on aft end of gearshaft (25).

k. Assemble bearing housing (35) as follows:

(1) Apply heat lamp to bearing housing (35).

(2) Press bearing (33) in the inboard side of housing (35).

(3) Install retaining ring (32).

(4) Press seal (37) in outboard side of housing (35).

(5) Install reducer (36) with new packing in housing.

(6) Install new packing (34) in groove on housing.

(7) Support inboard side of inner race of bearing (33) and press adapter (38) into bearing (33) through seal (37).

6-33. INSTALLATION — FREEWHEELING ASSEMBLY.

NOTE

Remove preservative from new or overhauled freewheeling assembly prior to installation in engine accessory gearbox. If engine is being replaced, install freewheeling unit on engine before installing engine in airframe.

a. Ensure that the four oil passage holes in the inner race shaft (9, figure 6-8), approximately **4** inches from the aft end, are open and free of obstructions and that new packing (26) is installed in the groove on the aft end of the outer race shaft (25) forward of the splines.

b. Apply a light coat of lubricating oil (C103) on packing (26).

NOTE

Inspect inside sump of freewheeling housing for corrosion and pitting. Refer to paragraph 6-47.

Before final installation of freewheeling assembly, stand assembly on work bench and fill area between inner and outer shaft with lubricating oil (C103).

c. Position freewheeling shaft assembly (25, figure 6-7) in housing (13) and let splined end of inner shaft protrude through aft side of engine accessory gearbox. Rotate adapter flange back and forth to line up spline teeth between freewheeling outer bearing shaft and drive gear in accessory gearcase. Push outer bearing firmly in place into freewheeling housing (13) and install washer (12), aluminum first, then the steel, and nuts (11) on mounting studs.

d. Install tail rotor drive gear (8) and aft bearing housing (7) as a unit on aft end of freewheeling shaft without packing (9) installed. Position oil inlet fitting so as to prevent binding or excessive twisting of oil line.

NOTE

The following shimming procedure must be accomplished if a different freewheeling assembly or engine is being installed or if old original shims do not provide correct clearance. (Refer to figure 6-7). Accomplish steps f. through k.

e. Install washer and nut (3 and 4, figure 6-7) on shaft. Attach holding tool (T32) to adapter flange on forward end of freewheeling assembly.

NOTE

Tighten nut only enough to firmly seat bearing and splined adapter on shaft. No shims should be added at this time.

f. Install nuts (5) temporarily to ensure seating of components. Back nut (5) off.

g. Tap adapter flange on forward end of freewheeling assembly. This will move shaft and aft bearing housing to the rear. Hold adapter flange in this position while measuring. Using two feeler gages, measure, at diametrically opposite positions, the gap between face of accessory gearcase and aft bearing housing (7).

h. Peel shim (10) to provide shim **0.015 to 0.020** less than measured clearance between faces to provide proper positioning of the freewheeling outer bearing shaft.

i. Remove aft bearing housing (7) and tail rotor drive gear (8).

j. Position peel shim (10) over aft bearing housing (7). Coat studs, shim, and mating surfaces with zinc chromate primer (C118).

NOTE

Do not place shim (10) over studs on engine case as damage to packing (9) will occur when installing housing (7).

k. Install tail rotor drive gear, aft bearing support, and new packing (9). Install washers (6), aluminum first then the steel and attaching nuts (5) to the three studs that protrude through raised bosses on aft housing.

l. Apply a ring of sealing compound (C131) to both surfaces of washer (4) and threads of nut (3). Install washer (4) and nut (3) on shaft. Using holding tool (T32) on forward adapter flange, hold freewheeling assembly while torquing nut **450 TO 500 INCH-POUNDS**. Grasp splined adapter (8) with hand and check freedom of motion of freewheeling assembly.

m. Install cotter pin (2) with eye and tangs below outside surface of nut, as shown in figure 6-7. Install input oil line to reducer (27) on side of housing (7).

n. Service transmission (paragraph 1-10).

6-34. FREEWHEELING HOUSING.

Refer to paragraph 6-41 for maintenance of the housing assembly.

6-35. SHAFT ASSEMBLY — FREEWHEELING.

6-36. DESCRIPTION — SHAFT ASSEMBLY — FREEWHEELING. The freewheeling shaft assembly (25, figure 6-7) is an assembly of components comprised of freewheeling inner race shaft with plug in forward end, forward bearing and seal cap assembly and freewheeling outer race shaft with bearings and clutch assembly. This assembly is removed from freewheeling housing and engine accessory gearbox as a unit.

6-37. INSPECTION — SHAFT ASSEMBLY — FREEWHEELING. Visually inspect splines for wear, cracks, and damage. Refer to paragraph 6-29 and figure 6-9 for wear limitations. No cracks allowed. If a crack in the freewheeling shaft assembly is suspected, refer to TM 1-1520-254-23, Technical Manual Aviation Unit Maintenance (AVUM) and Aviation Intermediate Maintenance (AVIM) Manual Nondestructive Inspection Procedures for OH-58 Helicopter Series.

6-38. REMOVAL — SHAFT ASSEMBLY — FREEWHEELING. Refer to paragraph 6-28.

6-39. REPAIR/REPLACEMENT — SHAFT ASSEMBLY — FREEWHEELING. Refer to paragraph 6-30 for repairs permitted. Refer to paragraph 6-31 for rework of freewheeling vent assembly when plug (41, figure 6-8) is not available.

Premaintenance Requirements for Main Driveshaft

Condition	Requirements
Model	OH-58A/C
Part No. or Serial No.	All
Special Tools	None
Test Equipment	Magnetic Particle Inspection Unit
Support Equipment	None
Minimum Personnel Required	Two
Consumable Materials	None
Special Environmental Conditions	None
References	TM 1-1520-254-23

6-40. INSTALLATION — SHAFT ASSEMBLY — FREEWHEELING. Refer to paragraph 6-33.

6-41. HOUSING ASSEMBLY.

6-42. DESCRIPTION — HOUSING ASSEMBLY. The freewheeling housing (28 or 29, figure 6-8) a component of the freewheeling assembly, is mounted on the forward end of the engine accessory gearcase. It provides coupling adaptation of the transmission driveshaft to tail rotor driveshaft. A lubrication fitting (14, figure 6-7) and oil lines provide freewheeling assembly lubrication from the transmission oil system. A drain plug is provided for draining oil from the freewheeling assembly.

NOTE

Removal of the freewheeling housing is not recommended unless it is necessary for engine gearbox seal replacement, change of engine or inspection, repair or replacement of the housing.

6-43. INSPECTION — HOUSING ASSEMBLY.
Premaintenance Requirements for Housing Assembly - Freewheeling

Condition	Requirements
Model	OH-58A/C
Part No. or Serial No.	All
Special Tools	None
Test Equipment	Eddy Current Inspection Unit
Support Equipment	None
Minimum Personnel Required	Two
Consumable Materials	None
Special Environmental Conditions	None
References	TM 1-1520-254-23

a. Inspect lubrication fitting, seals and hoses for leakage and security.

b. Inspect housing for cracks, wear, damage, and security of attachment. No cracks allowed. If a crack in the freewheeling housing assembly is suspected, refer to TM 1-1520-254-23, Technical Manual Aviation Unit Maintenance (AVUM) and Aviation Intermediate Maintenance (AVIM) Manual Nondestructive Inspection Procedures for OH-58 Helicopter Series.

6-44. REMOVAL — HOUSING ASSEMBLY.

a. Remove freewheeling assembly. (Refer to paragraph 6-25.)

b. Remove oil return line from housing. This line return soil from fitting (14, figure 6-7) or union (29) on forward end of housing (13) or housing (31).

c. Remove six self-locking nuts (15) located inside housing.

d. Remove housing (13 or 31), including housing bushing (27, figure 6-8), and gasket (16, figure 6-7) from six mounting studs on forward end of engine accessory gear case.

6-45. DISASSEMBLY — HOUSING ASSEMBLY.

a. Remove union (23, figure 6-8) and packing from fitting (21).

b. Remove drain plug assembly (20) and packing from fitting (21).

c. Remove bolt (22) with packing and remove fitting (21) with packing from housing.

d. Remove housing bushing (27) from housing (28).

WARNING

Degreasing Solvent is combustible and toxic to eyes, skin, and respiratory tract. Wear protective gloves and goggles/face shield. Avoid repeated or prolonged contact. Use only in well-ventilated areas (or use approved respirator as determined by local safety/industrial hygiene personnel). Keep away from open flames or other sources of ignition.

6-46. CLEANING — HOUSING ASSEMBLY. Clean all parts with degreasing solvent (C62). Dry with clean, dry air.

6-47. INSPECTION — HOUSING ASSEMBLY.
Premaintenance Requirements for Housing Assembly - Freewheeling

Condition	Requirements
Model	OH-58A/C
Part No. or Serial No.	All
Special Tools	None
Test Equipment	Eddy Current Inspection Unit
Support Equipment	None
Minimum Personnel Required	Two
Consumable Materials	None
Special Environmental Conditions	None
References	TM 1-1520-254-23

a. Visually inspect studs in housing (28, figure 6-8) for security and condition of threads.

b. Visually inspect housing for corrosion damage and/or loose bearings liners.

c. Inspect the housing (28) and bolt (22) for cracks by fluorescent penetrant method. Refer to TM 55-1500-335-23. No cracks allowed. If a crack in the freewheeling housing assembly or freewheeling housing assembly belt is suspected, refer to TM 1-1520-254-23, Technical Manual Aviation Unit Maintenance (AVUM) and Aviation Intermediate Maintenance (AVIM) Manual Nondestructive Inspection Procedures for OH-58 Helicopter Series.

6-48. REPAIR — HOUSING ASSEMBLY. (AVIM) Refer to TM 1-1500-204-23 for repairs.

6-49. ASSEMBLY — HOUSING ASSEMBLY.

NOTE

The following step is not required for newer freewheeling housing with drain hole in bottom. Lubrication fitting (21) and bolt with packing (22) are not required for newer type housing assembly with drain on bottom. Return to stock.

a. Install new packing onto bolt (22, figure 6-8) and insert bolt through lubrication fitting (21). Install new identical packing over end of bolt (aft side of fitting) and secure fitting to housing (28) with bolt (22).

b. Install drain plug assembly (20) with new packing into large hole on side of fitting (21). Torque drain plug assembly (20) **120 TO 150 INCH-POUNDS**. Lockwire (C96) from drain plug to housing.

c. Install union (23) with new packing in bottom of fitting (21) or in lower forward corner of housing assembly of new type housing with drain on bottom.

d. Position housing bushing (27) inside housing (28) and push in place. Align holes of bushing with mating holes in housing.

6-50. INSTALLATION — FREEWHEELING HOUSING.

a. Position gasket (16, figure 6-7) over studs on forward face of engine accessory gearbox.

b. Insert housing bushing (27, figure 6-8) into housing (13, figure 6-7) and align the six mounting holes in housing.

CAUTION

Nuts (15, figure 6-7) must not be reused if friction torque is less than 8 INCH-POUNDS.

c. Position housing (13) on mounting studs and install the six self-locking nuts (15).

d. Install oil return line to union (29) on fitting (14) or a lower corner of housing assembly for new type housings.

e. Install freewheeling assembly. Refer to paragraph 6-33.

6-51. CLUTCH ASSEMBLY — FREEWHEELING ASSEMBLY.

6-52. DESCRIPTION — CLUTCH ASSEMBLY — FREEWHEELING ASSEMBLY. The sprag clutch (18, figure 6-8), a component of the freewheeling assembly, provides a disconnect through the outer race of the freewheeling shaft to the engine during autorotation.

6-53. INSPECTION — CLUTCH ASSEMBLY — FREEWHEELING ASSEMBLY. Refer to paragraph 6-29 and figure 6-9.

6-54. REMOVAL — CLUTCH ASSEMBLY — FREEWHEELING ASSEMBLY. Refer to paragraph 6-28 and figure 6-8.

6-55. REPAIR — CLUTCH ASSEMBLY — FREEWHEELING ASSEMBLY. Refer to paragraph 6-30 and figure 6-9.

6-56. INSTALLATION — CLUTCH ASSEMBLY — FREEWHEELING ASSEMBLY. Refer to paragraph 6-32.

6-57. BEARINGS — FREEWHEELING ASSEMBLY.

6-58. DESCRIPTION — BEARINGS — FREEWHEELING ASSEMBLY. The bearings (12, 16, 24, and 33 figure 6-8) are components of the freewheeling shaft assembly (25, figure 6-7).

6-59. INSPECTION — BEARINGS — FREEWHEELING ASSEMBLY. Inspect bearings for wear and roughness. Refer to paragraphs 6-28 and 6-29.

6-60. REMOVAL — BEARINGS — FREEWHEELING ASSEMBLY. Refer to paragraph 6-28.

6-61. REPAIR — BEARINGS — FREEWHEELING ASSEMBLY. Refer to paragraph 6-30.

6-62. INSTALLATION — BEARINGS — FREEWHEELING ASSEMBLY. Refer to paragraph 6-32.

6-63. DESCRIPTION — SEALS — FREEWHEELING HOUSING. Preformed seals and packings serve as lubricating oil retention components of the freewheeling housing and shaft assembly. Refer to figure 6-8 for seals and packings location.

6-64. INSPECTION — SEALS — FREEWHEELING HOUSING. Inspect seals and packing for leaks, cuts and general deterioration.

6-65. REMOVAL — SEALS — FREEWHEELING HOUSING. Refer to paragraph 6-28.

6-66. REPAIR/REPLACEMENT — SEALS — FREEWHEELING HOUSING. Repair is limited to removal and replacement of seals and packings with like serviceable items per TM 55-1520-228-23P.

6-67. INSTALLATION — SEALS — FREEWHEELING HOUSING. Refer to paragraph 6-32 and 6-33.

SECTION III. MAIN TRANSMISSION

6-68. MAIN TRANSMISSION.

6-69. DESCRIPTION — MAIN TRANSMISSION. The OH-58A may have a P/N 206-040-003-5 (three-planetary) transmission installed. The OH-58C will have a P/N 206-040-003-23 (four-planetary) transmission installed. Both transmissions provide a two-stage reduction of 17.44 to 1.0 (6180 to 354). The first stage is a bevel gear arrangement with 3.74 to 1.0 reduction; the second stage reduction is obtained with a planetary gear train providing 4.67 to 1.0 reduction. An accessory drive pad is provided on the lubrication pump on the forward side of the transmission for mounting the rotor tachometer and flight control hydraulic pump. This drive pad has a 1.42 to 1.0 reduction from the engine. The transmission is mounted on the cabin roof deck, forward of the power plant. The main rotor mast is secured in the top of the transmission by the main rotor bearing, bearing liner, and bearing seal plate. Transmission is flexibly supported on the airframe by a system composed of two pylon support links, one on each side, and a drag link secured to bottom of transmission and connected by bolt to the rubber isolation support mount on the airframe. Refer to paragraph 2-289. A cylindrical boss extends downward from forward end of drag link and fits loosely in a hole in the pylon stop mounted on airframe, providing a positive limit of travel of the pylon. Refer to Section VII, this chapter, for transmission oil system information.

6-70. INSPECTION — MAIN TRANSMISSION.

a. Inspect main transmission case for obvious damage (nicks, scratches, gouges, etc.).

b. Inspect main transmission oil for evidence of water. When water is present, the oil has a dirty milky appearance. If this condition is present or suspected, drain and flush until water contamination is removed, then reservice transmission. In the event contamination cannot be cleared, replace transmission. Refer to paragraph 1-10 for servicing.

6-71. REMOVAL — MAIN TRANSMISSION.

Premaintenance Requirements for Main Transmission

Condition	Requirements
Model	OH-58A/C
Part No. or Serial No.	All
Special Tools	(T11)
Test Equipment	None
Support Equipment	(S12)
Minimum Personnel Required	Two
Consumable Materials	(C77) (C103) (C118) (C97) (C103.1)
Special Environment Conditions	None

NOTE

The transmission may be removed with the main rotor mast installed.

a. When transmission is to be replaced, accomplish preservation before removal unless conditions prevent operation. Refer to TB 55-9150-200-24. Drain transmission after preservation.

b. Open transmission fairing.

c. Disconnect battery and any external power source.

d. Remove cyclic and collective control rods.

e. Remove main rotor hub and blade assembly.

f. Remove swashplate and support assembly.

g. Remove main driveshaft (1, figure 6-10)

h. Remove tachometer generator and hydraulic pump as a unit from transmission by removing nut (9) and washers (8).

i. Disconnect transmission oil pressure transmitter. C

j. Remove hydraulic reservoir from transmission. Refer to paragraph 7-57.

k. Disconnect pressure oil line and return line from freewheeling assembly. Cap or plug lines and openings.

l. Loosen clamp (14) and disconnect hose assembly (13).

m. Install mast nut on top of rotor mast. Attach clevis with bolt to eye of mast nut and attach hoist. Refer to table 1-4 (S16).

NOTE

If mast assembly has been removed while transmission is mounted on helicopter attach lifting plate to top of transmission and attach hoist.

n. Take up slack in hoist cable and apply only sufficient tension to support transmission when pylon supports and drag pin are disconnected.

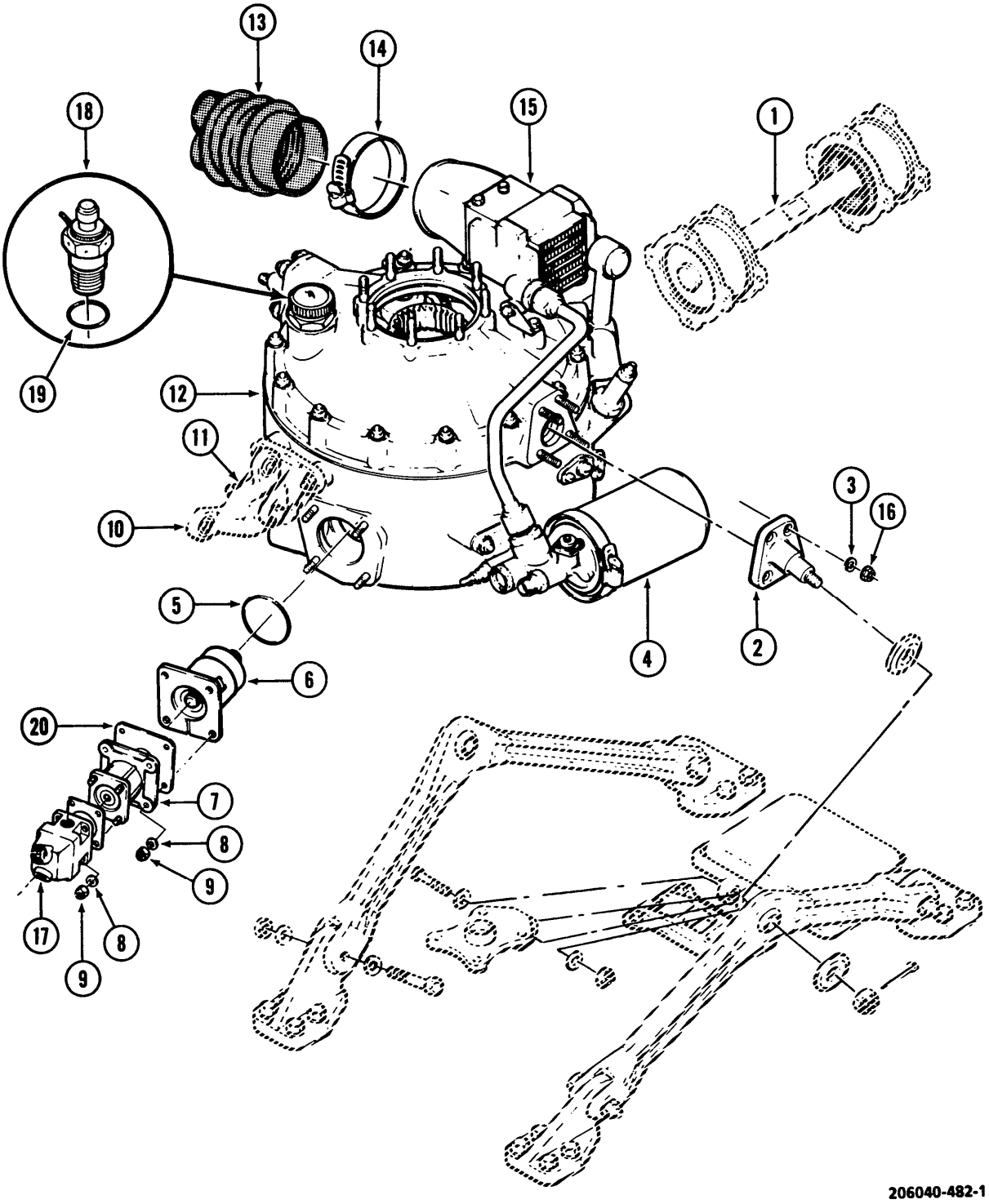

Figure 6-10. Main Transmission (Sheet 1 of 2)

1. Main Drive Shaft (Ref)
2. Spindle
3. Washer
4. Oil Filter Assembly
5. Packing
6. Transmission Oil Pump
7. Tachometer Generator (Ref)
8. Washer (Ref)
9. Nut (Ref)
10. Bellcrank, Collective Control (Ref)
11. Bellcrank Support (Ref)
12. Transmission
13. Hose Assembly
14. Clamp
15. Oil Cooler
16. Nut
17. Hydraulic Pump (Ref)
18. Filler Cap Assembly
19. Packing
20. Gasket

Figure 6-10. Main Transmission (Sheet 2 of 2)

o. Remove main transmission and pylon support links as follows:

(1) Disconnect drag pin (17, figure 2-55) from isolation mount (4) by removing transmission mount support bolt (13), washers (14), and nut (15).

(2) Remove nuts (21), washers (19), and bolts (18) from pylon support links (11) at support link fittings 6 and 12).

CAUTION

Do not remove shims (24) under pylon support fitting (6 and 12) or isolation mount (4). If pylon support fitting or isolation mounts are removed from deck, ensure shims are bonded in place. If shims are not bonded, identify for reinstallation in same location. Loss or mixing of shims will require depot maintenance for transmission alignment.

NOTE

Ensure all flight controls, oil lines, electrical wiring, and other attachments are disconnected from transmission.

p. Actuate hoist and lift transmission carefully from airframe while guiding transmission to clear components installed on upper part of airframe.

q. Remove pylon support links from transmission by removing cotter pins and nuts (8) and washers (9).

6-72. REPAIR — MAIN TRANSMISSION.

a. Repair of the main transmission is limited to removal and replacement of authorized components, polishing out nicks, scratches, and gouges, and spot painting bare surfaces on the transmission case. Nicks, scratches, and gouges may be removed as described in TM 1-1500-204-23-1, General Maintenance Manual. Top of transmission case is made of aluminum; bottom of transmission case is made of magnesium as is the main drive shaft housing.

b. Only bent, cracked, or thread damaged studs may be replaced at AVIM.

CAUTION

Never use more than the recommended torque in an effort to force a stud into the housing. If driving torque is not within the limits specified, replace the stud with the proper overall size. Occasionally, it will be necessary to try two or more studs of the same size to find one which falls within limits. No drilling or tapping is permitted. Thread clean up is permissible.

c. Except as specified herein, studs are replaced in accordance with instructions contained in TM 1-1500-204-23-1. Whenever a stud is replaced, clean out small vent hole in bottom of threaded hole or adjacent to bottom of threaded hole. Vent holes for the two forward adapter mount studs are drilled from bottom of threaded holes through case assembly. Vent holes for the two aft adapter mount studs run at approximately a **60**-degree angle to bottom of stud

holes. Vent holes for upper four spindle studs are drilled from upper case to bottom of threaded holes, approximately **0.800** inch from edge of spindle boss. Replacement of lower spindle studs, due to location of vent holes, is not authorized. Failure to clean vent holes can result in a false torque, or cause the case to crack during stud installation. Install replacement studs to height shown below:

LOCATION	STUD SIZE	STUD HEIGHT	INCH-POUNDS
Transmission case lower side at drag pin (4 studs)	1/4 inch	0.680 inch	50-95
Top case at pylon support spindles (top 4 special studs only)	3/8 inch	0.790 inch	175-375

NOTE

Apply zinc chromate primer (C118) to threads of stud and install while wet. Dye penetrant inspect area adjacent to drag pin assembly, prior to installation of new studs.

6-73. INSTALLATION — MAIN TRANSMISSION.

Premaintenance Requirements for Main Transmission

Condition	Requirements
Model	OH-58A/C
Part No. Serial No.	All
Special Tools	None
Test Equipment	Torque wrench
Support Equipment	(S12) (S16)
Minimum Personnel Required	Two
Consumable Materials	(C2) (C40) (C97) (C103) (C103.1) (C118)
Special Environmental Conditions	None

CAUTION

Prior to installation of the main transmission, inspect the pylon support links, support fittings and isolation mount in accordance with paragraph 2-284, 2-291, and 2-292.

a. Install main rotor mast in transmission, if previously removed. If roller bearings in the lower mast bearing prevented insertion of the mast, use a clean length of aluminum tubing to push the rollers to the outboard limit of the bearing cage.

b. Attach maintenance hoist (S12) to lifting eye and lift assembly, guiding transmission carefully to avoid damage.

c. Install pylon support links (11, figure 2-55), by placing one washer (2) on each support spindle (1) with chamfered face of the center hole inboard.

d. Position pylon support link (11) on support spindle. Install washers (9) and nuts (8) on spindle. Tighten nut finger tight.

e. Lower transmission to position pylon stop (3) located on lower side of pylon drag pin (17) into hole in pylon stop. Guide pylon drag pin (17) to connecting position with isolation mount (4).

f. Position legs of pylon support link (11) in mounting position with forward pylon support fitting (12) and aft pylon support fitting (6). Install bolts (18), washers (19), recessed washers (20), and nuts (21). Torque nuts (21) **460 TO 510 INCH-POUNDS**.

g. Install bolt (13) and washer (14) through right side of transmission pylon drag pin and isolation mount (4). Install washer (14) and nut (15). Torque nut (15) **480 TO 690 INCH-POUNDS** and secure with cotter pin.

h. Torque spindle nuts (8) to **50 INCH-POUNDS**, plus one castellation to align cotter pin holes, and install cotter pin (7).

i. Connect oil lines, electrical wiring and air hose assembly (13, figure 6-10).

j. Install collective control bellcrank (10, figure 6-10) and support (11) on forward side of transmission if removed.

k. Install swashplate and support assembly, main rotor hub and blade assembly, cyclic and collective control rods, hydraulic pump, rotor tachometer generator, and hydraulic reservoir. Connect hydraulic drain line if removed. Refer to paragraphs 5-10, 5-121 steps g. and h., 7-19, 7-45, and 8-52.

l. Install main driveshaft. Refer to paragraph 6-15.

m. Check for security of all items.

n. Install and close cowling.

o. Connect battery.

6-74. PREPARATION FOR SHIPMENT OR STORAGE — MAIN TRANSMISSION.

CAUTION

Extreme care must be taken while cleaning, preserving, and packaging the transmission to prevent damage to the chip detector.

a. With the mast assembly removed, spray the interior of the transmission through the top opening with approximately one pint of lubricating oil (C103 or C103.1). While spraying, manually rotate the internal gears and bearings with the input drive quill; then drain lubricating oil.

WARNING

Degreasing Solvent is combustible and toxic to eyes, skin, and respiratory tract. Wear protective gloves and goggles/face shield. Avoid repeated or prolonged contact. Use only in well-ventilated areas (or use approved respirator as determined by local safety/industrial hygiene personnel). Keep away from open flames or other sources of ignition.

NOTE

Immediately install hoisting adapter after the mast has been removed from the transmission assembly and the interior preservation has been completed. Keep rubber portions of the transmission pylon mounts free of all oil, grease, or solvents to prevent deterioration or weakening of bonds between rubber and metal.

b. Clean the exterior of the transmission, including splines and the threaded areas, with degreasing solvent (C62). Air dry or wipe with a clean, lint-free cloth.

c. Cap or plug all lines, as applicable, in accordance with TM 1-1500-204-23. Cover breather holes and all other openings with barrier material (C27) and secure with tape (C136). Secure all loose wire and lines with the same tape to prevent damage during shipment.

CAUTION

Do not allow corrosion preventive compound to contact rubber parts.

d. Apply corrosion preventive compound to all exterior bare metal surfaces, including splines, studs, and thread areas.

e. Attach a tag to the transmission stating: TRANSMISSION PRESERVED WITH LUBRICATING OIL, MIL-L-23699, or transmission preserved with lubricating oil, DOD-L-85734.

f. Attach a properly filled out DD Form 1577-2 (Unserviceable/Reparable Tag) to the transmission and a DD Form Label 1577-3 to exterior of the container. Refer to TB 750-126.

g. Initiate DA Form 2410 (Component Removal and Repair/Overhaul Record) in accordance with DA PAM 738-751.

NOTE

Be sure to place copies of DA Form 2410 in a grease-proof envelope and stow in top of container.

h. Cover input drive spline and generator drive spline areas with barrier material (C27) and secure with tape (C136).

i. If a transmission metal storage and shipping container (NSN 8145-00-198-8559, P/N 206-040-003 MUSC-1) is available, the preferred method of shipment is in this container. Carefully lower the transmission into the container and onto bottom molded pad. Install upper pad over top of transmission. Install 24 units of desiccant in top of container, install records in top of container, and secure lid of container in place.

j. As a field expedient only, prepare the transmission as stated below:

NOTE

The procedure is based on the assumption that the provisions of step i. cannot be complied with, that the work will be done under less than ideal conditions with limited equipment, and on some occasions by personnel who are not experts in the field of preservation. This procedure will be used only at locations where facilities for the application of normal preservation procedures do not exist.

(1) Comply with preceding steps a. through h. to the extent possible with available materials and equipment.

(2) If caps or plugs specified are not available, openings may be closed with barrier material (C27) and secured with any type of tape that is available.

(3) Coat the entire exterior metal surface of the transmission with a light coat of aircraft grease (C79). Cover the transmission with barrier material (C27) and secure with adhesive tape (C136) that is available.

(4) Mount the transmission in the best available container (constructed if necessary) of wood or metal. Cushion, block, and brace as necessary.

NOTE

If the field expedient procedure is used, mark the outside of the container as follows: THIS TRANSMISSION IS NOT PRESERVED FOR STORAGE. STORE INDOORS AND PROCESS AS SOON AS PRACTICABLE.

k. Obliterate old markings from container that do not coincide with the item to be returned. Mark container in accordance with MIL-STD-129.

6-75. DRAG PIN.

6-76. DESCRIPTION — DRAG PIN. The main transmission is supported and attached at its lower rear section by an isolation mount which dampens pylon to fuselage vibrations and limits pylon rock. Movement of the transmission and isolation mount is limited by a drag pin which extends down into a plate on the deck. Contact between the drag pin and its static stop produces a noise known as spike knock.

6-77. INSPECTION — DRAG PIN.

a. Verify drag pin bolt is properly installed and in the right direction.

b. Inspect drag pin for condition and security. Look for an obviously bent or broken pin. Typically the four drag pin mounting studs will fail before the drag pin. Consequently, nicks and dents are not critical.

NOTE

If swashplate to cowling or main drive shaft to isolation mount contact has occurred during a touch-down autorotation, or as a result of a hard landing as defined in Chapter 1 of this manual, the drag pin assembly must be removed for a more detailed inspection, and the four drag pin mounting studs must be removed and replaced. Refer to AVIM.

c. Inspect the transmission mount support stop. Refer to paragraph 2-291.

6-78. CLEANING — DRAG PIN.

a. Clean all sealant residue from drag pin and mounting area on bottom of case.

WARNING

Degreasing Solvent is combustible and toxic to eyes, skin, and respiratory tract. Wear protective gloves and goggles/face shield. Avoid repeated or prolonged contact. Use only in well-ventilated areas (or use approved respirator as determined by local safety/industrial hygiene personnel). Keep away from open flames or other sources of ignition.

b. Clean drag pin (4, figure 6-11) in degreasing solvent (C62). Dry with clean dry air.

6-79. REMOVAL — DRAG PIN. Refer to paragraph 6-71.

a. Remove four cotter pins (1, figure 6-11), four stud nuts (2), and washers (3) attaching drag pin (4) to bottom of transmission case.

NOTE

The drag pin assembly boss mounts into case with a tight fit. Sealant is applied between case and drag pin. Drag pin may be difficult to remove from case.

b. Apply heat lamp to case in area of drag pin.

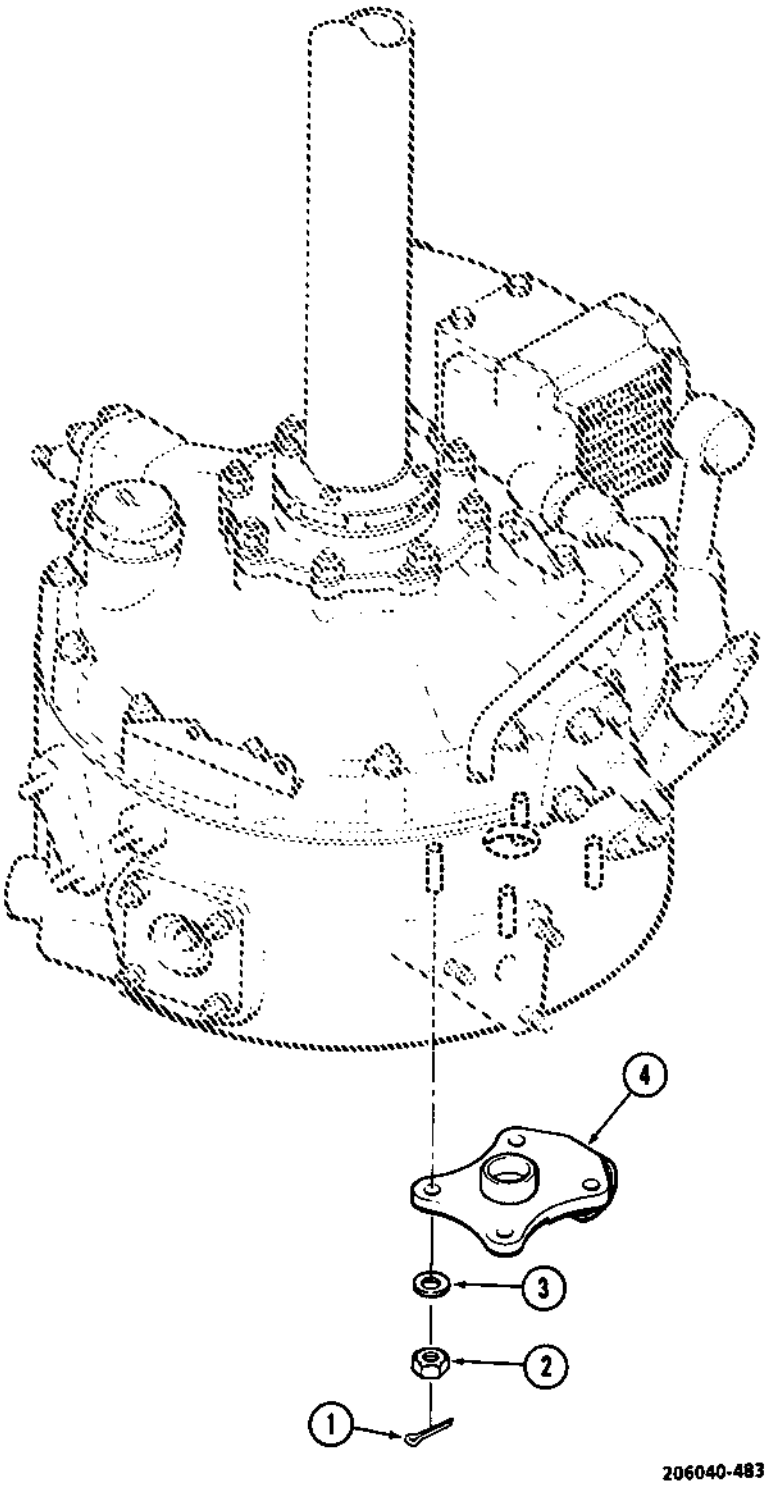

1. Cotter Pin
2. Nut
3. Washer
4. Adapter

Figure 6-11. Drag Pin Installation

CAUTION

Exercise care in drag pin removal to avoid damage to main case. Do not use screwdriver as a wedge between drag pin and case.

c. When case is thoroughly heated, tap drag pin assembly gently with a plastic mallet. If drag pin will not slip from case, use a flat, thin, nonmetallic aid approximately one inch wide as a wedge.

d. When drag pin assembly is loosened, use hands and gentle taps with plastic mallet to work assembly down and to remove from case studs.

6-80. INSPECTION — DRAG PIN.

Premaintenance Requirements for Drag Pin

Condition	Requirements
Model	OH-58A/C
Part No. or Serial No.	All
Special Tools	None
Test Equipment	Fluorescent Penetrant Inspection Unit
Support Equipment	None
Minimum Personnel Required	One
Consumable Materials	None
Special Environmental Conditions	None
References	TM 1-1520-254-23

a. Visually inspect drag pin (4, figure 6-11) for physical damage.

b. Inspect spherical bearing for wear, security, and freedom of movement. If bearing wear exceeds **0.010** inch axial or **0.008** radial, replace bearing.

c. Inspect drag pin (4, figure 6-11) using dye or fluorescent penetrant method. Refer to TM 43-0103.

d. For replacement of four drag pin mounting studs, refer to paragraph 6-72.

6-81. REPAIR — DRAG PIN (AVIM).

Premaintenance Requirements for Drag Pin

Condition	Requirements
Model	OH-58A/C
Part No. Serial No.	All
Special Tools	(T30) (T32)
Test Equipment	None
Support Equipment	None
Minimum Personnel Required	One
Consumable Materials	(C22) (C115) (C118) (C120) (C126) (C131)
Special Environmental Conditions	None

a. Replace drag pin assembly if found defective by dye penetrant inspection.

b. Dress out minor nicks and scratches. Touch up bare spots with zinc chromate primer (C118).

c. If spherical bearing failed inspection, replace as follows: (AVIM)

(1) Using mandrel end of staking tool (T30), press old bearing and bushing into receptacle portion of tool.

(2) Clean any sealant residue from bore of housing using sandpaper (C126). Wipe with a clean cloth dampened with naphtha (C22).

(3) Apply primer adhesive (C115) to the bushing, bearing outer race, and bore of drag pin assembly housing. Wipe dry with clean cloth and allow to dry for five minutes.

(4) Apply retaining compound (C120) to the bushing, bearing outer race, and bore of drag pin assembly housing. Wipe dry with a clean cloth.

(5) Apply a second coat of retaining compound (C120) to surfaces described in step (4). Exercise care so as not to contaminate the bearing element.

NOTE

Staking procedure must be completed within 30 minutes of sealing compound application.

(6) Install bearing and bushing in housing. Using the staking side of tool and the support portion of tool, stake the bushing on each side alternately to a depth of **0.012 to 0.016** inch.

(7) Cure applied retaining compound (C120) by heating with heat lamp to **170°F (77.3°C)** for one hour after staking.

NOTE

Ensure that the bearing has been properly staked.

6-82. INSTALLATION — DRAG PIN.

a. Make sure that mounting boss of drag pin and mounting area on transmission case are clean.

b. Apply sealing compound (C131). Mix sealant according to directions on package, and apply a thin coat of sealant to mounting area on drag pin.

c. Using a heat lamp, heat lower transmission case in area of drag pin mounting to facilitate installation of drag pin.

d. Position drag pin assembly (4, figure 6-11) over four mounting studs.

e. Install four washers (3) and nuts (2). Torque nuts **50 TO 70 INCH-POUNDS** and secure with cotter pins.

f. Apply sealing compound (C131) to outer edge of drag pin (4) and mounting area of case.

g. After sealant dries, trim with sharpened plastic scraper. Do not use metal scraper.

6-83. INPUT PINION HOUSING ADAPTER AND SEALS.

6-84. DESCRIPTION — INPUT PINION HOUSING ADAPTER AND SEALS. An input pinion housing is located on aft side of transmission main case. Engine torque is transmitted through the main driveshaft into the adapter.

6-85. INSPECTION — INPUT PINION HOUSING ADAPTER AND SEALS. Inspect area around input pinion housing for leakage, security of attachment, and any apparent damage.

NOTE

Total static or dynamic leakage will not exceed 5 DROPS PER MINUTE.

6-86. REMOVAL — INPUT PINION HOUSING ADAPTER AND SEALS. (AVIM)

a. Drain transmission oil into suitable container (paragraph 1-10), and remove main driveshaft (paragraph 6-10).

b. Remove retaining ring (9, figure 6-12) and disc (8) from input pinion nut (10).

c. Position holding tool (T32) on face of input adapter (11) with holding pins of tool positioned in two holes in face of adapter (11).

d. Insert a 3/4 inch square drive wrench in hole in the pinion nut (10) and remove nut.

e. Remove input adapter (11) from end of pinion.

CAUTION

Do not use screwdriver to remove housing from case. Do not disturb shim (1).

f. Deleted.

g. Remove nuts (7) and washers (5 and 6) attaching seal housing (4). Carefully cut sealant between seal housing (4) and main case with a sharp plastic scraper. Use plastic mallet with plastic wedge to loosen seal housing (4).

h. Remove seal housing (4).

i. Remove packing (2) from input face of transmission case.

j. Remove packing (14) from end of pinion. Discard packing.

k. Remove seal (3) from housing (4). Discard seal.

6-87. INSPECTION — INPUT PINION HOUSING ADAPTER AND SEALS. (AVIM)

a. Visually inspect all visible parts of the main input pinion gear for damage.

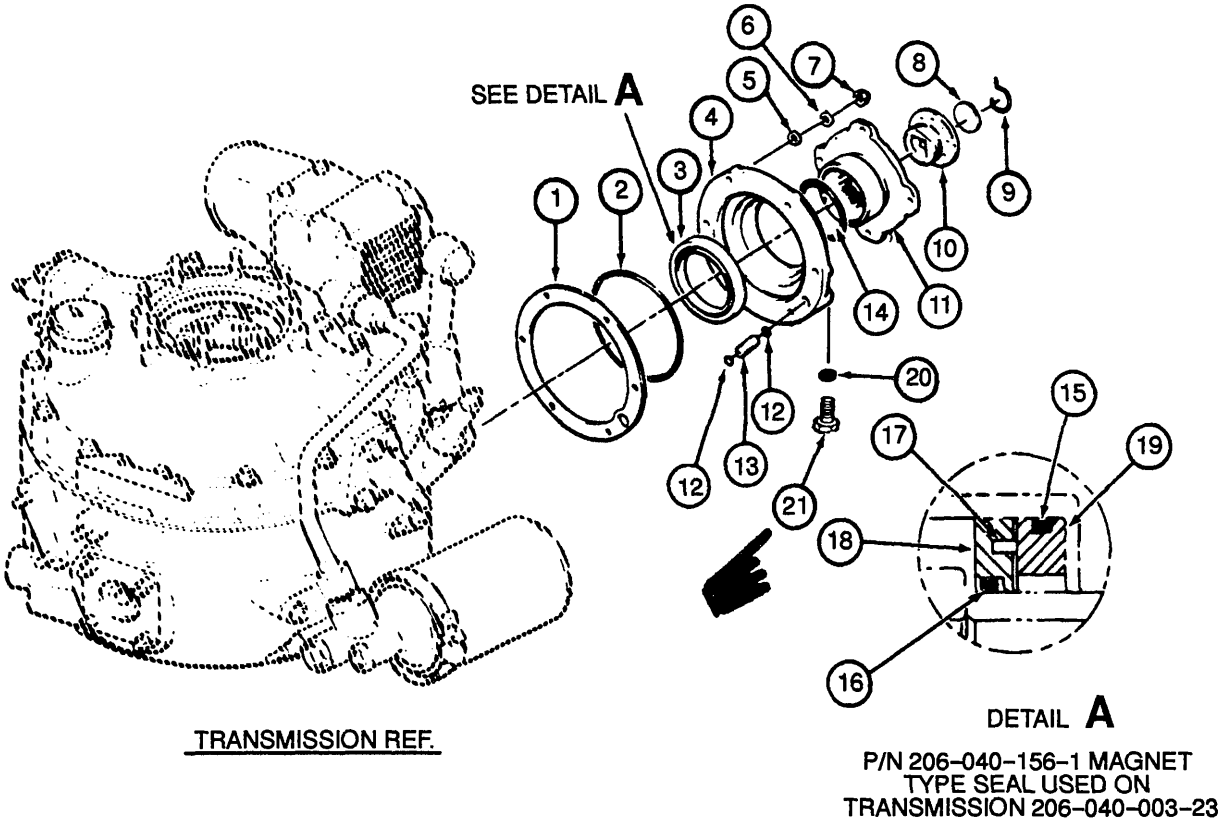

1. Shim
2. Packing
3. Seal
4. Housing, Bearing and Seal
5. Washer
6. Washer
7. Nut
8. Disc (Cover)
9. Retaining Ring (Locking Spring)
10. Nut, Main Input Pinion
11. Adapter
12. Packing
13. Tube, Oil Drain Fitting
14. Preformed Packing
15. Packing
16. Packing
17. Seal Ring
18. Seal Case
19. Magnet
20. Packing
21. Plug, Machine Thread

Figure 6-12. Input Pinion Housing Adapter and Seals

b. Inspect adapter (11, figure 6-12) for wear in area of contact with seal (3). Maximum allowable wear in this area is **0.002** inch, provided no nicks, dents, or scratches are present.

c. Inspect input pinion housing for corrosion pitting in sealing areas. No corrosion or repair allowed in sealing areas.

d. Inspect machined mating surface of input pinion housing and transmission for corrosion. Clean up pitting in accordance with TM 43-0105, do not use mechanical means to clean up pitting. Maximum allowable depth of pitting is **0.030**. Pitting beyond **0.030** is not repairable, return transmission to depot.

6-88. REPAIR — INPUT PINION HOUSING ADAPTER AND SEALS. (AVIM)

a. Replace packing (2, figure 6-12) on installation.

b. Replace adapter (11) if worn beyond limits in seal contact area.

c. Replace housing (4), nut (10), disc (8), and retaining ring (9) if damaged.

d. Replace packings (12). Replace tube (13) if damaged.

6-89. INSTALLATION — INPUT PINION HOUSING ADAPTER AND SEALS. (AVIM)

Premaintenance Requirements for Installation of Input Pinion Adapter and Seals

Condition	Requirements
Model	OH-58A/C
Part No. Serial No.	All
Special Tools	(T18) (T32)
Test Equipment	None
Support Equipment	None
Minimum Personnel Required	Two
Consumable Materials	(C57) (C103) (C129) (C131)
Special Environmental Conditions	None

(0-a). If shim (1, figure 6-12) is removed, lost or damaged, proceed as follows:

(1) Position housing (4) against bearings, do not install washers and nuts.

(2) Using two feeler gauges, measure at diametrically opposite positions the gap between the face of the transmission case and the face of the housing (4).

(3) Shim as required to obtain **0.001** to **0.004** inch less than measured clearance between the faces to provide proper preload on the input quill bearing.

NOTE

Install seal (3) P/N 451509H19 in housing (4) for the P/N 206-040-003-5 transmission according to step a., and skip step b. Install seal (3) P/N 206-040-156-1 in housing (4) for the P/N 206-040-003-23 transmission according to step b., and skip step a.

a. Press new seal (3) P/N 451509H19 into bearing and seal housing (4) with bearing tool (T18), using sealant (C129) around O.D. of seal (3).

b. Install seal (3) P/N 206-040-156-1 in housing (4) as follows:

NOTE

Seal (3) P/N 206-040-156-1 is a magnetic type seal consisting of four parts. The parts are a magnet ring, a seal case, and two packings. If seal is being reused install new packings (15 and 16). Seal should remain in packaging until ready for installation. Seal cavity in housing (4) must be free of foreign material and all packing seating areas and chamfers must be free of burrs.

(1) When removing seal (3) from packaging, the seal case must be separated from the magnet ring. Pull seal case straight away from magnet ring. Discard paper separator.

NOTE

Package contains a small tube of dampening fluid (C57).

CAUTION

Do not slide seal case across magnet ring. Avoid placing magnet ring portion of seal in area where small metal chips could be attached by the magnet.

(2) Heat housing (4) with heat lamp to ease installation of magnet ring portion of seal.

(3) Lightly lubricate both packings (15 and 16) of seal and bore of housing (4) with dampening fluid (C57).

(4) Install larger packing (15) into groove of magnet ring.

(5) Cover polished surface of magnet ring with a clean, lint-free cloth. Using care not to damage packing, push magnet ring into bore of housing (4) with polished side up until the back side of magnet ring is squarely seated against shoulder in bottom of bore. Rotate magnet ring in bore of housing if necessary. Ensure face of magnet ring is free of lubricant. (See detail A, figure 6-13.)

(6) Place housing and magnet ring assembly over adapter (11, figure 6-12) so that bottom of housing is in contact with adapter.

(7) Install smaller packing (16) of seal into groove of seal case.

(8) Using care not to damage packing, hand press seal case over adapter (11, figure 6-12) until lapped carbon sealing surface comes into contact with lapped surface of magnet ring. (See detail C, figure 6-13).

CAUTION

Use care not to separate or disturb position of housing, adapter, and seal assembly until adapter is secured in place.

c. Install new packings (12) on oil drain tube (13). Apply thin coating of lubricant (C103) to packings and insert one end of tube into hole in input mounting face of transmission case.

d. Install new packing (2) in groove on outer edge of bearing liner and lubricate with lubricant (C103).

e. Lubricate new packing (14) with lubricant (C103) and install just inboard of splines on pinion.

NOTE

Install housing (4), seal (3) P/N 451509H19, adapter (11), and nut (10) on the P/N 206-040-003-5 transmission according to step f., and skip step g. Install housing (4), seal (3) P/N 206-040-156-1, adapter (11), and nut (10) on the P/N 206-040-003-23 transmission according to step g. and skip step f.

f. Install housing (4) with elastomeric type seal as follows:

(1) Position bearing and seal housing (4) containing seal (3) P/N 451509H19, on mounting studs on input face of case. Guide outboard end of oil drain tube (13) into mating hole in bearing and seal housing (4).

(2) Install aluminum washers (5) next to bearing and seal housing (4) followed by other washers (6) and stud nuts (7). Torque nuts **50 TO 70 INCH-POUNDS**.

(3) Lubricate seal (3) with lubricant (C103) and position splined adapter (11) on end of input pinion shaft, and through seal (3) in bearing and seal housing (4).

(4) Install input pinion nut (10) in end of shaft.

(5) Position holding tool (T32), on face of input adapter (11) with holding pins of tool engaged in two holes in flange of adapter (11). Position a 3/4 inch square drive into end of nut (10), hold input adapter (11) with holding tool and torque nut (10) **150 TO 166 FOOT-POUNDS**, to align holes for lock spring (9).

(6) Remove square drive from nut (10) and remove holding tool from input adapter (11).

g. Install housing (4) with magnetic type seal as follows:

(1) Using care not to disturb position of assembled housing (4), adapter (11), and seal

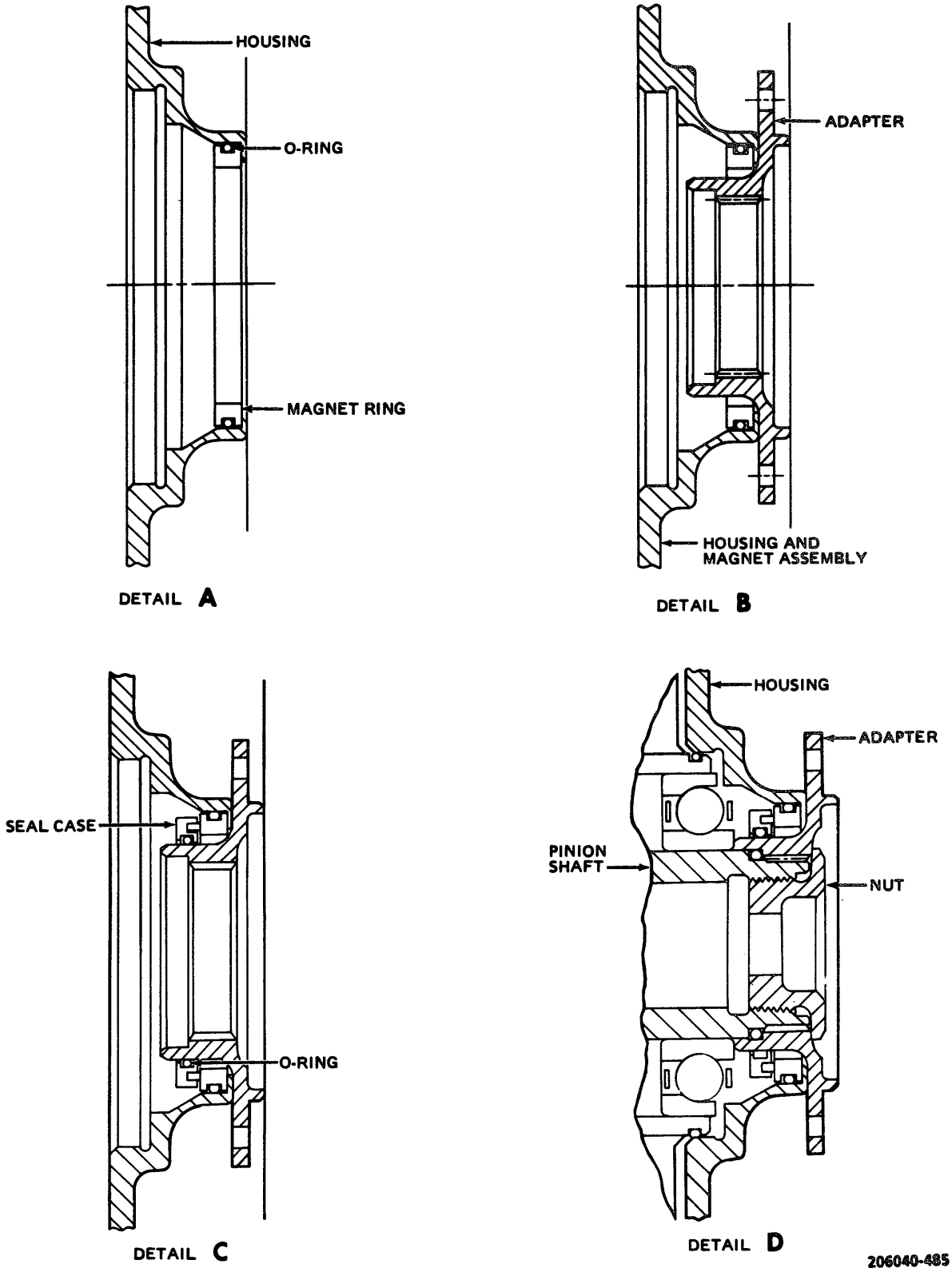

Figure 6-13. Main Input Quill, Seal Installation

assembly (3), guide assembly over end of pinion. Guide outboard end of oil drain tube (13) into mating hole in housing (4). Slide housing inboard and install nut (10). (See detail D, .gure 6-13.)

(2) Position holding tool (T32), on face of input adapter (11, figure 6-12) with holding pins of tool engaged in two holes in flange of adapter (11). Position a 3/4 inch square drive into end of nut (10), hold input adapter (11) with holding tool and torque nut (10) **150 TO 166 FOOT-POUNDS**, to align hole for lock spring (9).

(3) Remove square drive from nut (10) and remove holding tool from input adapter (11).

(4) Install aluminum washers next to bearing and seal housing (4) followed by other washers and stud nuts. Torque nuts **50 TO 70 INCH-POUNDS**.

h. Apply a bead of sealant (C129) around the transmission case and housing (4, figure 6-12). Install packing (20) and plug (21). Torque **40 TO 50 INCH-POUNDS** and lockwire.

i. Install cover (8) in end of input shaft nut (10). Install locking spring (9) in nut with locking end of spring through hole in nut and hole in shaft.

j. Reinstall main input driveshaft.

k. Service transmission with oil (paragraph 1-10).

6-89.1. REPAIR — INPUT PINION CORK SEAL. (AVIM)

NOTE

Soak new cork in shellac (C163) for 12 hours prior to installation (step f.)

a. Drain transmission oil into suitable container (paragraph 1-10), and remove main driveshaft (paragraph 6-10).

b. Remove retaining ring (9, figure 6-12) and disc (8) from input pinion nut (10).

c. Position holding tool (T32) on face of input adapter (11) with holding pins of tool positioned in two holes in flange or adapter (11).

d. Insert a 3/4 inch square drive wrench in hole in the pinion nut (10) and remove nut.

e. Clean pinion internal surface with naphtha (C22).

NOTE

The original cork plug is not to be disturbed or removed.

Do not push the new plug further inboard than the 1/4 inch dimension in the following step to prevent the possibility of forcing out the old plug.

f. Insert new cork plug, number 19, type 1, grade A, class 1, short, 1/4 inch inboard of the pinion internal threads. Remove any excess shellac.

g. After shellac dries, apply a bead of sealant (C131) to the mating surfaces of the new cork and pinion.

h. Clean pinion internal threads with naphtha (C22).

i. Position holding tool (T32) on face of input adapter (11) with holding pins of tool positioned in two holes in flange of adapter (11).

j. Insert a 3/4 inch square drive wrench into end of nut (10), hold input adapter (11) with holding tool and torque nut (10) **150 TO 166 FOOT-POUNDS**, to align hole for lock spring (9).

k. Remove square drive from nut (10) and remove holding tool from input adapter (11).

l. Install cover (8) in the end of the input shaft nut (10). Install locking spring (9) in nut with locking end of spring through hole in nut and hole in shaft.

m. Reinstall main driveshaft (paragraph 6-15).

n. Service transmission with oil (paragraph 1-10).

6-90. MAST ASSEMBLY.

6-91. DESCRIPTION — MAST ASSEMBLY. The mast assembly is a tubular steel shaft fitting with a bearing and seal assembly which secures the mast in top of transmission and supports mast in the vertical position. Mast driving splines engages with transmission planetary gear assembly. Splines on the upper portion of mast provide mounting for main rotor.

6-92. INSPECTION — MAST ASSEMBLY.

a. Visually inspect mast exterior for scratches, nicks, and corrosion.

(1) From **0 to 7** inches below top of mast: nicks and scratches are not to exceed **0.005** inch depth on the full circumference, **0.0075** inch for half circumference, or **0.010** inch for quarter circumference.

(2) From **7 to 37** inches below top of mast: nicks and scratches are not to exceed **0.010** inch depth for full circumference, **0.015** inch depth for half circumference or **0.020** inch for quarter circumference.

(3) All external repairs shall have a minimum radius of **0.500** inch after repair.

(4) Pits resulting from corrosion after cleanup shall not exceed limits of substeps (1) and (2).

(5) Ensure reworked mast is identified as per figure 6-16 notes.

(6) All areas not subject to rework shall be coated with epoxy polyamide primer (C116) and silver spray painted. This procedure will retard corrosion.

b. Inspect retainer plate for corrosion or leakage in seal area.

NOTE

Leakage that does not allow oil level to fall below sight gage level, or run down the transmission upper housing onto the transmission case on a flight of maximum endurance possible for an OH-58, is not excessive.

c. Inspect mast interior for corrosion.

CAUTION

Main rotor must be perpendicular to the mast when using the power wrench (T7) to loosen or tighten the mast nut.

NOTE

To adequately inspect mast interior, remove mast to hub retaining nut and with appropriate light, inspect for corrosion.

(1) Remove bolt (9, figure 5-6), washer (10), nut (16), and mast nut lock (11). Remove mast nut (12) using standard tools or power wrench (T7), adapter (T8), and socket (T9). Refer to figure 5-7.

(2) Remove sealant and cap-plug (16, figure 6-14) from main rotor mast assembly (1).

(3) With appropriate light, inspect interior of mast for corrosion.

(4) Corrosion or suspected corrosion on mast interior is not acceptable. Remove and evacuate mast to AVIM for repair.

(5) Inspect mast plastic plug for serviceability.

(6) Apply sealant (C129) to cap-plug (16) and install cap-plug in main rotor mast (1, figure 6-14).

(7) Apply small amount of corrosion preventative compound (C53) to mast threads, and install mast nut (12). Torque mast nut (12) 250 to 275 foot-pounds to align with mast nut lock (11). If using power wrench (T7), adapter (T8) and socket (T9). Refer to figure 5-7. Install mast lock nut (11, figure 5-6), bolt (9), washer (10), and nut (16). Torque nut (16) to 60 inch-pounds.

NOTE

No further retorquing is required unless mast nut is once again removed. If low mast nut torque is suspected after initial torque and helicopter has been in operation, the applicable check is to remove all torque and retorque 250 foot-pounds minimum, 275 foot-pounds maximum. With these limits, retorque as near as possible to 275 foot-pounds.

6-93. REMOVAL — MAST ASSEMBLY.

Premaintenance Requirements for Removal of Mast Assembly

Condition	Requirements
Model	OH-58A/C
Part No. or Serial No.	All
Special Tools	(T17) (T16) (T36)
Test Equipment	None
Support Equipment	(S12) (S8)
Minimum Personnel Required	Two
Consumable Materials	(C2) (C27) (C51) (C52) (C62) (C76) (C84) (C103) (C116) (C118) (C124) (C125) (C126) (C129) (C131)
Special Environmental Conditions	None

NOTE

Main rotor mast may be removed from transmission while transmission is installed in helicopter or may be removed with transmission for removal from transmission at a later time.

a. Remove cyclic and collective control rods. Refer to paragraph 5-114 and figure 5-30.

b. Remove main rotor hub and blade assembly. Refer to paragraph 5-8.

c. Remove idler link assembly, boot assembly and swashplate and support assembly from mast.

d. Remove nuts (6, figure 6-14) and washers (7) from studs attaching mast upper bearing liner (14), and bearing and seal plate (10) to top of transmission.

e. Reinstall mast nut. Attach hoist (S12) to nut and take up cable slack.

NOTE

To prevent corrosion, do not handle mast assembly with bare hands below upper mast liner. Use white cotton gloves (C76). Use corrosive preventive compound (C52) to remove any existing fingerprints.

f. Using white cotton gloves (C76) carefully lift and guide mast out of transmission. Immediately install a cover (S8) on top of transmission case and wrap mast with barrier material (C27).

g. Place mast assembly on a suitable cushioning material, such as a mattress.

6-94. DISASSEMBLY — MAST ASSEMBLY. (AVIM)

a. Remove screws (2, figure 6-14) securing locking plate (3) to upper mast bearing nut (4), and remove plate.

b. Position mast holding fixture (T17) on lower splines to hold rotor mast (1).

c. Using wrench (T36) and holding fixture (T17), remove mast nut (4).

d. Remove screws (9) securing retaining plate (10) to upper mast bearing liner (14). Remove retaining plate (10), seal (5), shim (11), and packing (13) from assembly.

e. Press bearing (12) from mast (1).

f. Remove bearing liner (14) from bearing (12).

g. Remove sealant and cap-plug (16) from main rotor mast assembly (1).

6-95. CLEANING — MAST ASSEMBLY. (AVIM)

WARNING

Degreasing Solvent is combustible and toxic to eyes, skin, and respiratory tract. Wear protective gloves and goggles/face shield. Avoid repeated or prolonged contact. Use only in well-ventilated areas (or use approved respirator as determined by local safety/industrial hygiene personnel). Keep away from open flames or other sources of ignition.

CAUTION

Ensure bearings are handled only with clean white cotton gloves. Do not allow bearings to spin when drying with compressed air.

a. Clean all parts of mast assembly with degreasing solvent (C62).

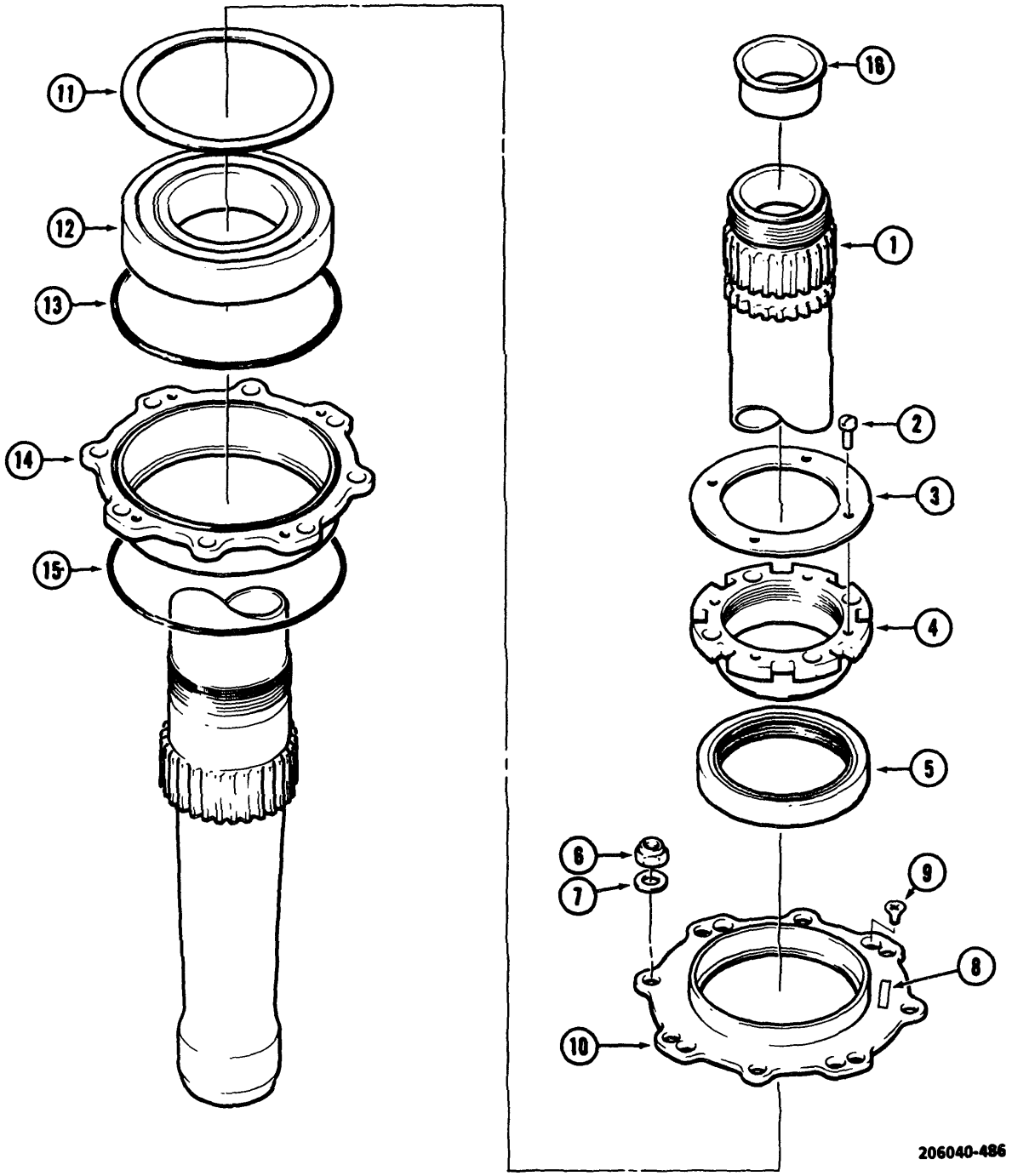

1. Mast
2. Screw
3. Locking Plate
4. Nut
5. Seal
6. Nut
7. Washer
8. Ident Plate
9. Screw
10. Plate
11. Shim
12. Bearing
13. Packing
14. Liner
15. Packing
16. Cap-Plug, Protective

Figure 6-14. Main Rotor Mast — Disassembly

b. Dry with clean dry, .ltered air and coat bearings with oil (C103).

6-96. INSPECTION — MAST ASSEMBLY. (AVIM)

Premaintenance Requirements for Mast Assembly

Condition	Requirements
Model	OH-58A/C
Part No. or Serial No.	All
Special Tools	None
Test Equipment	Magnetic Particle Inspection Unit
Support Equipment	None
Minimum Personnel Required	Two
Consumable Materials	None
Special Environmental Conditions	None
References	TM 1-1520-254-23

a. Visually inspect for damage to the area which would be contacted by the main rotor static stops. No yielding or deformation is allowed.

b. Remove bearings, and check mast runout. Refer to figure 6-16.

(1) Runout at the lower bearing journal not to exceed **0.002** inch.

(2) Runout at the upper bearing journal not to exceed **0.003** inch.

(3) Runout at the groove in the upper set of splines (the split cone seat) not to exceed **0.003** inch.

(4) Runout on the O.D. of the mast at a point approximately **20.00** inches from the upper end not to exceed **0.015** inch.

CAUTION

The greatest single source of unnecessary bearing damage occurs during bearing removal (see paragraph 6-94). Always keep the components of a separable bearing together. Never mix bearing components. Bearings will be placed in unsealed polyethylene bags during processing of mast.

NOTE

Damage in excess of the above limits is cause for rejection of the entire mast. If mast meets these requirements, proceed with normal inspection, including magnetic particle and fluorescent penetrant inspections as applicable.

c. Visually inspect split inner races outer race, bearing balls, and cage for condition. Look for brinelling and burnishing of inner and outer races. Look for fractured cage, pitting, nicks, and scoring of ball bearings. No brinelling, burnishing, pitting, or scoring is permitted on active surfaces of bearing races or ball bearings. Tarnish on retainer is not detrimental. Bearings which have been subjected to high impact forces (e.g., crash landing, sudden stoppage, etc.) must be replaced.

NOTE

Axial and radial play of the mast bearing is normal; measurements are not required. Transmission oil sampling, chip detector, and visual inspections are the only methods used to determine the condition of the mast bearing.

d. Visually inspect mast splines for burrs, nicks and scratches. Damage **0.002** inch or less in depth is acceptable. Inspect the milled groove in serrations where collar set attaches. Milled groove must cross five serrations only. Look for heavy scoring or missing metal in milled groove, or in one of the adjacent serrations.

e. Inspect mast for corrosion and pitting.

NOTE

Masts, P/N 206-010-332-5, -9, and -11, were treated internally with hot linseed oil at time of manufacture. Later masts were internally treated with epoxy primer. The change from oil to epoxy primer was made to provide better corrosion protection.

f. Inspect seal and bearing plate for corrosion or pitting in area of seal seat.

WARNING

Critical Safety Items (CSI)

Magnetic particle inspection is a critical characteristic.
No cracks allowed.

WARNING

Critical Safety Items (CSI)

Fluorescent penetrant inspection is a critical characteristic.
No cracks allowed

g. Inspect the following parts (figure 6-14) by magnetic particle method (code M) or fluorescent penetrant method (code F) as outlined in TM 55-1500-335-23. Refer to figures 6-15 and 6-16 for mast and subassemblies repair areas and limits. No cracks allowed. If a crack in any of the listed parts is suspected, refer to TM 1-1520-254-23, Technical Manual Aviation Unit Maintenance (AVUM) and Aviation Intermediate Maintenance (AVIM) Manual Nondestructive Inspection Procedures for OH-58 Helicopter Series.

ITEM	NOMENCLATURE	CODE
1	* Mast	M
3	* Locking Plate	F
4	* Mast Bearing Nut	M
10	* Plate, Mast and Seal	M
14	* Bearing Liner	M

* Indicates Critical Safety Item

(1) Inspect mast (1, figure 6-14) using direct electrical contact using copper braided pads; magnetize at 1200 amperes. Inspect with longitudinal field with three (3) overlapping shots spaced 12 inches apart, magnetize at 6000 ampere-turns.**6-58**

LOCKING PLATE

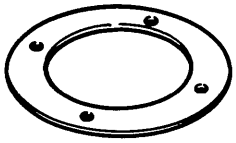

A. Damage limits for exterior not established.
B. I.D. serrated area may have maximum of 20% damage.

NUT

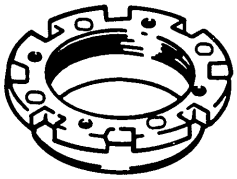

A. Seal contact area of nut must be smooth.
B. Damage to threaded area not permitted.
C. NOTE 1
D. NOTE 4
E. NOTE 5

PLATE

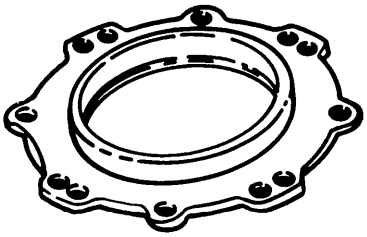

A. I.D. MAX 3.503
B. NOTE 1
C. NOTE 2
D. NOTE 3
E. NOTE 4
F. NOTE 5

BEARING

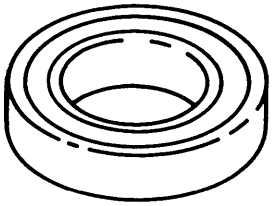

A. O.D. MIN 4.3303 NOTE 7 and NOTE 8.
B. I.D. MAX 2.3623 NOTE 6.
C. Corrosion is not permitted.

LINER

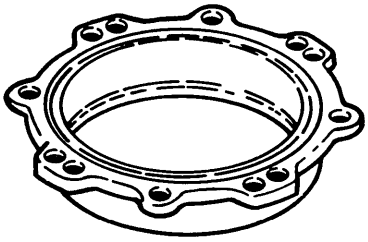

A. O.D. MIN 4.529 NOTE 7.
B. I.D. MAX 4.331 NOTE 7 and NOTE 8.
C. NOTE 1
D. NOTE 2
E. NOTE 3
F. NOTE 4
G. NOTE 5

206040-487-1

Figure 6-15. Main Rotor Mast Subassemblies (Sheet 1 of 2)

NOTES

1. Surface corrosion which can be removed with scotch brite, crocus cloth, or steel wool (steel parts only) without perceptible removal of base material is negligible.
2. Scratches, nicks, gouges, and pits, less than 0.002 inch depth, are negligible.
3. Only negligible damage is permitted on this item, except on flange areas.
4. Individual pits or other damage not more than 0.010 inch depth by 0.100 inch diameter is permitted, provided the defect is at least 0.050 inch from any bolt hole, sealing surface, bearing seat area, or adjacent damage. This is provided such defects affect no more than 5 percent of any surface.
5. Chamfer or corner damage may be cleaned up to a maximum of 0.060 inch X 45 degrees resultant chamfer.
6. Some wear can be expected in these areas. Must provide slight interference (press fit) with parts at same temperature. Measure if necessary.
7. Measurement of this dimension is not normally required.
8. Discretion must be used in taking four place measurements.

Figure 6-15. Main Rotor Mast Subassemblies (Sheet 2 of 2)

(2) Inspect mast bearing nut (4, figure 6-14) with circular field using 1 inch central conductor, magnetize at 1200 amperes.

(3) Inspect plate, mast and seal (10, figure 6-14) with circular field using 1 1/2 inch central conductor. Make three (3) equally spaced shots (120 degrees apart) magnetize at 1200 amperes.

(4) Inspect bearing liner (14, figure 6-14) with circular field using 1 1/2 inch central conductor. Make three (3) equally spaced shots (120 degrees apart) magnetize at 1200 amperes.

6-97. REPAIR — MAST ASSEMBLY. (AVIM)

NOTE

To prevent corrosion, do not handle the bearing or the mast assembly with bare hands below upper mast bearing liner — use white cotton gloves (C76). Use corrosion preventive compound (C52) to remove any existing fingerprints.

a. Blend out sharp edges of scratches, nicks, and gouges in area A and area B splines, with fine India stone (C84). Depth of damage after repair must not exceed **0.030** inch at tip of spline, **0.020** inch on sides of spline, nor **0.005** inch at root of spline. Spline damage must not exceed **0.100** square inch per serration.

b. Polish out nicks, dents, scratches, or corrosion pits not exceeding limits given in figure 6-16 with fine India stone (C84), blending repair area with surrounding area.

c. Replace mast if damage after cleanup exceeds limits given in figure 6-16.

d. Remove superficial corrosion, using a wire brush or steel wool in area E of figure 6-16.

WARNING

Degreasing Solvent is combustible and toxic to eyes, skin, and respiratory tract. Wear protective gloves and goggles/face shield. Avoid repeated or prolonged contact. Use only in well-ventilated areas (or use approved respirator as determined by local safety/industrial hygiene personnel). Keep away from open flames or other sources of ignition.

e. If honing equipment is not available, surface corrosion may be removed from inside diameter of mast with sandpaper (C126). Abrasive cloth, etc., can be attached to **1.400 to 1.500** inch diameter ramrod or rotary drill with extension. Surface may be wet polished, using degreasing solvent (C62). Do not overheat mast assembly during polishing operation.

WARNING

Acetone is extremely flammable and toxic to eyes, skin, and respiratory tract. Wear protective gloves and goggles/face shield. Avoid repeated or prolonged contact. Use only in well-ventilated areas (or use approved respirator as determined by local safety/industrial hygiene personnel). Keep away from open flames, sparks, hot surfaces or other sources of ignition.

(1) After removal of corrosion products, surface stains excluded, thoroughly clean inside diameter with acetone (C2).

(2) Treat inside diameter with oil (C103). To ensure adequate coverage, a double pour through is recommended.

f. Replace upper mast bearing if unserviceable. Replace mast if TIR exceeds allowable specified limits in figure 6-16 and paragraph 6-96.

g. Remove corrosion products from seal and bearing plate with sandpaper items (C124, C125, or C126) then clean surface with degreasing solvent (C62). Pitting not to exceed **0.010** inch after cleanup will be permitted, provided pitting is not adjacent on both inner and outer diameters, and provided it does not effect critical sealing surfaces.

h. Replace all unserviceable parts.

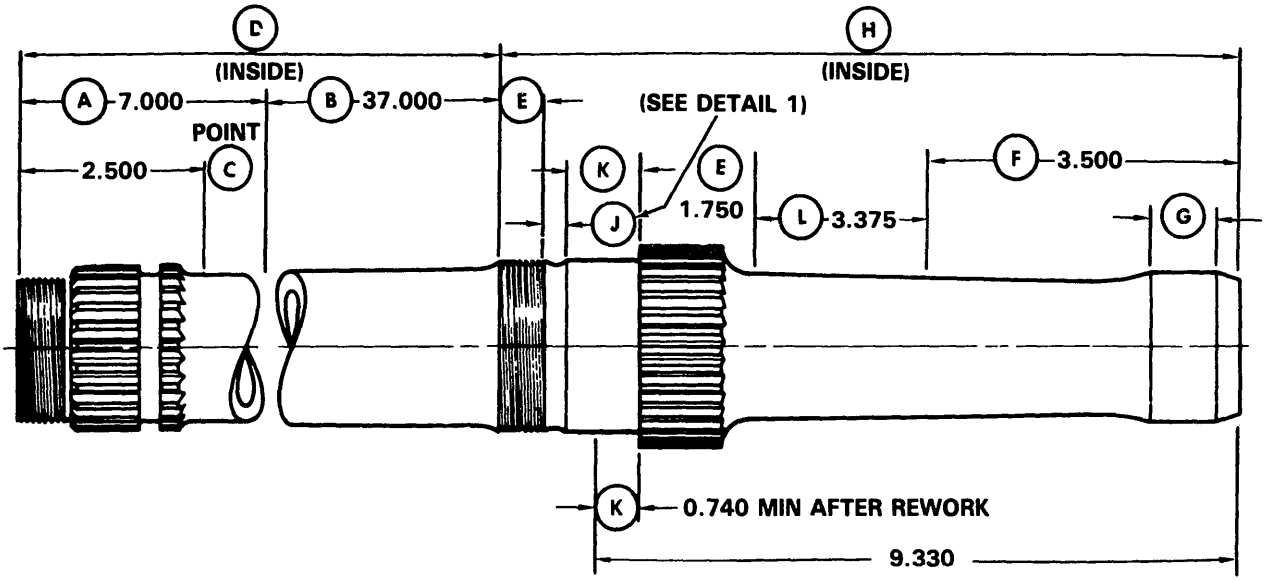

MAXIMUM INSIDE DIAMETERS AFTER REPAIR	
WHEN POINT C O.D. AS MEASURED 2.50 INCH FROM TOP OF MAST IS	AREA D MAXIMUM INSIDE DIA AFTER REPAIR IS
2.000	1.632
1.995	1.622
1.990	1.615

DEPTH OF REPAIR ON OUTSIDE SURFACES				
	WHEN INSIDE DIAMETER IS	DEPTH OF OUTSIDE REPAIR IS		
		FULL CIRCUM	HALF CIRCUM	QUARTER CIRCUM
AREA A FOR UPPER 7 IN.	1.590	0.015	0.0175	0.020
	1.600	0.010	0.0125	0.015
	1.610	0.005	0.0075	0.010
AREA B FROM 7 TO 37 IN. FROM TOP	1.590	0.020	0.025	0.030
	1.600	0.015	0.020	0.025
	1.610	0.010	0.015	0.020

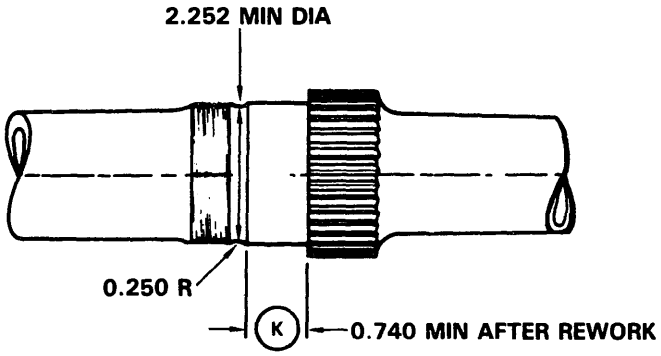

DETAIL 1

206040-488-1

Figure 6-16. Mast Repair Areas and Limits (Sheet 1 of 3)

ALLOWABLES

Area E. Only surface rust which can be removed with a wire brush or steel wool.

Area F. 0.015 inch depth with 0.500 inch minimum radius.

Area G. This surface is a roller bearing inner race, perceptible wear necessitates measurement. Wear allowed is 0.0002 inch by comparing worn to unworn area of bearing surface. O.D. MINIMUM is 2.0666 inch.

Area H. 0.005 inch depth or to a maximum I.D. of 1.620 inches provided cleanup is accomplished by honing or similar method so that material removed is uniform around diameter.

Area J. Rust shall be removed by reworking the mast to dimensions shown in DETAIL 1. Rework need not be brought to the minimum 2.252 inches O.D. provided all traces of corrosion and pitting are removed. Radius shall not be less than 0.250 inch.

Area K. The upper bearing journal surface may be reduced in width to allow repair in area J. Minimum acceptable width is 0.740 inch. See DETAIL 1. Scattered nicks, scratches and pits to a depth of 0.002 inch after cleanup and not exceeding five percent of circumference are acceptable.

Area L. 0.005 inch depth with 0.050 inch minimum radius.

NOTES:

1. External repairs must have a minimum radius of 0.500 inch unless, otherwise stated.
2. Internal repairs should consist of removing metal uniformly around the diameter.
3. Any mast which is reworked must be identified as REWORKED as follows:
   a. Coat reworked areas A, B, and J with epoxy polyamide primer (C116) exclude mast splines, split cone, and thread separation.
   b. EXAMPLE-When area F is reworked, lightly stamp the letters RF on the center of the mast data plate between the part number and serial number.
   c. Repairs to the mast I.D. in areas D and H will also include I.D. measurements when stamping area on data plate.

WARNING

Acetone is extremely flammable and toxic to eyes, skin, and respiratory tract. Wear protective gloves and goggles/face shield. Avoid repeated or prolonged contact. Use only in well-ventilated areas (or use approved respirator as determined by local safety/industrial hygiene personnel). Keep away from open flames, sparks, hot surfaces or other sources of ignition.

   d. The upper 2.500 inches of the mast I.D., measured from the top down, may be honed not to exceed 0.010 inches in depth (0.020 inch diameter). The first inch from the top must not exceed 1.705 inches inside diameter overall. Clean affected area with acetone (C2) and coat with zinc chromate primer (C110).
4. Previously reworked masts shall be carefully measured to ensure dimensions are not exceeded.
5. Internal repairs shall be coated with oil (C103).
6. All dimensions are in inches.
7. TIR - total (dial) indicator reading.
8. Only surface corrosion which can be removed with steel wool is reparable on the threads in area A; no other change is allowable. Figure 6-16. Mast Repair Areas and Limits (Sheet 2).

Figure 6-16. Mast Repair Areas and Limits (Sheet 2 of 3)

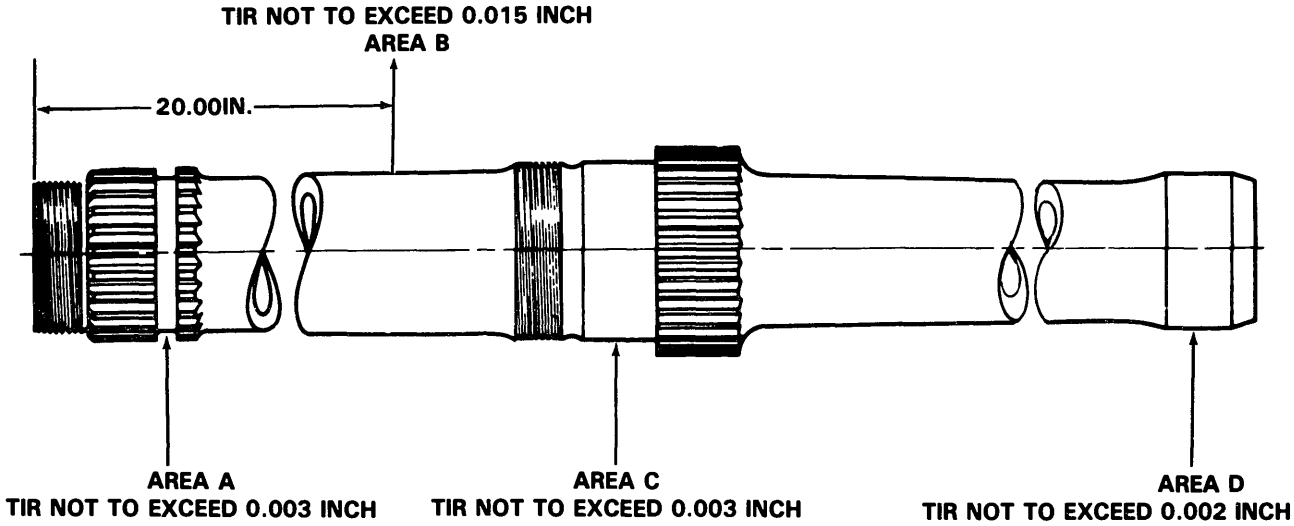

PREFERRED RUNOUT METHOD

NOTE

Mount mast between live centers.

ALLOWABLES

1. Runout at area A (split cone seat) not to exceed 0.003 inch TIR.
2. Runout at area B on OD of mast at a point 20.000 inches from top end not to exceed 0.015 inch TIR.
3. Runout at area C (upper bearing journal) not to exceed 0.003 inch TIR.
4. Runout at area D (lower bearing journal) not to exceed 0.002 inch TIR.

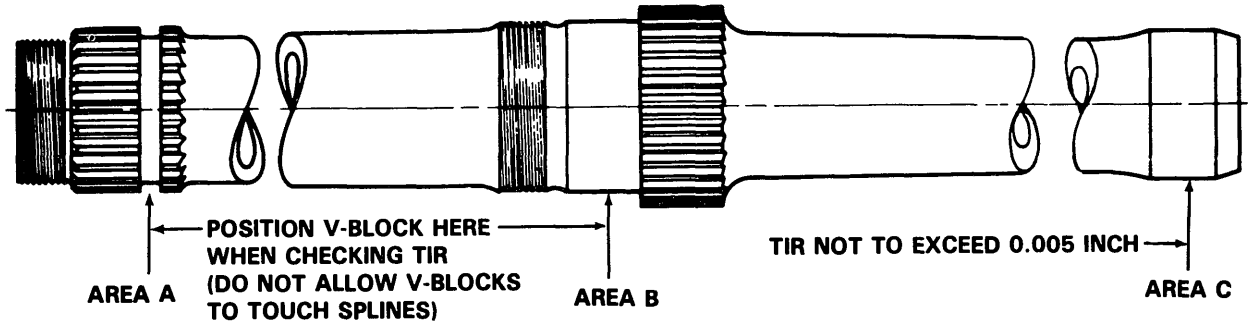

ALTERNATE RUNOUT METHOD

NOTE

Mount mast on two v-blocks, one v-block on area A (split cone seat), the other v-block on area B (upper bearing journal).

ALLOWABLES

1. Runout at area C (lower bearing journal), not to exceed 0.005 inch TIR.
2. Any mast that exceed 0.005 inch TIR, shall be rechecked in accordance with preferred method runout before mast rejection.

206040-488-3

Figure 6-16. Mast Repair Areas and Limits (Sheet 3 of 3)

WARNING

Refer to figure 6-16 mast repair areas and limits for any rework of mast assembly.

NOTE

Lubricate bearings and surfaces of mating parts on reassembly with oil (C103).

6-98. ASSEMBLY — MAST ASSEMBLY. (AVIM)

NOTE

To prevent corrosion, do not handle the bearing or the mast assembly with bare hand below upper mast bearing liner — use white cotton gloves (C76). Use corrosion preventive compound (C52) to remove any existing fingerprints.

a. If O.D. of bearing (12, figure 6-14) has a chamfer on one comer, install bearing with chamfer up. Apply a thin coating of corrosion preventive compound (C51) to the mast in the bearing mounting area and the lower half of the threaded area, filling the groove at the bottom of threads.

b. Press bearing (12, figure 6-14) onto mast. After bearing is installed, fill the thread relief area located between the bearing and threads with corrosion preventive compound (C51).

c. Preheat bearing liner (14) with heat lamp to **140°F (60°C)** temperature and press liner onto bearing (12), using bearing puller (T16).

d. Position shim (11) on bearing (12).

e. Position plate (10) on shim (11) and bearing liner (14). Remove or add shims to provide **0.001 to 0.004** gap between plate and liner. Refer to figure 6-17.

f. Install packing (13, figure 6-14) in groove in bearing liner (14).

g. Install seal (5) in plate (10). Apply film of sealing compound (C131.1) between seal O.D. and plate mating bore. Trim excess sealant. Lubricate seal lip with oil (C103).

h. Insert mast bearing nut (4) into seal (5) installed in plate (10) before installing on mast.

i. Position seal (5) and nut (4) on shim (11) and bearing line (14).

j. Install screws (9) to secure plate (10) to bearing liner (14).

k. Hold mast with holding fixture (T17) and torque nut (4) with wrench (T36). Torque nut to **500 TO 550 FOOT-POUNDS**. Refer to figure 6-17.

NOTE

Ensure that end of lockwire is bent inboard toward mast.

l. Apply small bead of sealing compound (C131) between mast nut and mast serrations. Install locking plate (3) and nut (4). Install two screws and lockwire.

CAUTION

If sealant is applied after controls are installed do not cover drain holes at bottom of controls support.

When sealant is dry, trim excess materiel with sharpened scraper. Do not use metal scraper. Refer to figure 6-17.

NOTE

Apply thin coating of corrosion preventive compound (C51) to mast prior to bearing installation and above bearing to include treated area. Remove excess compound after bearing installation.

m. Apply sealant (C129) to a new cap-plug (16) and install cap-plug in main rotor mast (1, figure 6-14).

6-99. INSTALLATION — MAST ASSEMBLY.

NOTE

To prevent corrosion, do not handle the bearing or the mast assembly with bare hands below upper mast bearing liner — use white cotton gloves (C76). Use corrosion preventive compound (C52) to remove any existing fingerprints.

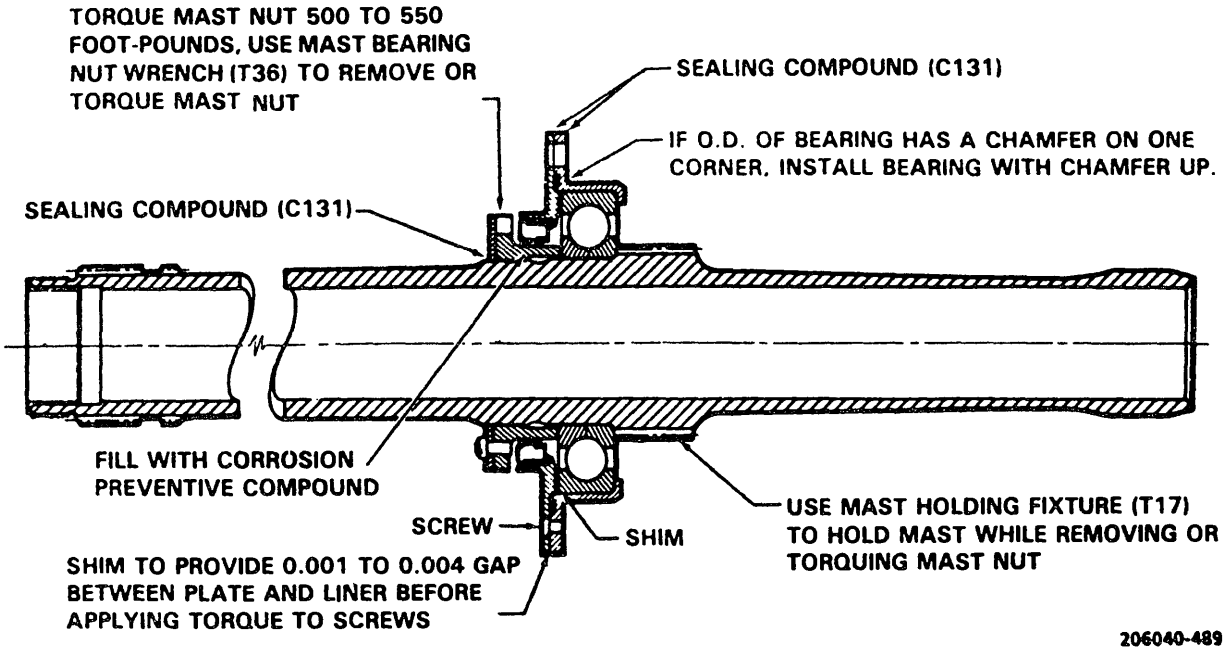

Figure 6-17. Main Rotor Mast Build-up

NOTE

Lubricate transmission spider splines and mast alignment bearing with oil.

a. Place packing (15, figure 6-14) in recess (not in oil groove) in top of transmission top case.

CAUTION

Ensure mast bearing lubrication holes are free of obstructions. Blockage of lubrication holes can cause premature failure of the mast bearing.

a.1. Inspect mast assembly lubrication holes for blockage. If sealer or other foreign material is found, the mast assembly should be disassembled, cleaned, and reassembled.

CAUTION

To prevent entry of contaminants into mast assembly and transmission, ensure mast cap-plug (16) is installed.

b. Install assembled main rotor mast through opening in top of transmission.

c. Line up lower mast spline teeth with spline teeth in planetary spider.

d. Guide end of mast into lower mast bearing and position upper mast bearing liner over mounting studs in top case.

e. Install swashplate assembly. Refer to paragraph 5-121.

f. Install main rotor assembly. Refer to paragraph 5-10.

g. Install cyclic and collective rods. Refer to paragraph 5-114.

h. Install cowling. Refer to paragraph 2-48.

6-100. SIGHT GAGE, OIL LEVEL ASSEMBLY.

6-101. DESCRIPTION — SIGHT GAGE, OIL LEVEL ASSEMBLY. A sight glass located on the transmission housing is used to check the oil level in the transmission. The oil level must be visible in sight glass. If oil is visible, additional oil is not required. If oil is not visible in sight glass, add oil to the center dot only. The normal capacity is 4.0 U.S. quarts.

NOTE

Refer to paragraph 1-10 for additional information and servicing of transmission oil system.

6-102. INSPECTION — SIGHT GAGE, OIL LEVEL ASSEMBLY. Inspect sight gage for leaks, cracks, and discoloration of glass.

NOTE

Condensation on the inside of the sight glass is acceptable, providing that the oil does not have a dirty, milky appearance.

6-103. REMOVAL — SIGHT GAGE, OIL LEVEL ASSEMBLY.

a. Drain oil below sight gage.

b. Remove retaining ring, sight glass and packing.

6-104. REPAIR — SIGHT GAGE, OIL LEVEL ASSEMBLY.

a. Replace sight glass if badly discolored, cracked or excessively crazed.

b. Replace packing.

6-105. INSTALLATION — SIGHT GAGE, OIL LEVEL ASSEMBLY.

a. Install new packing, sight glass and retaining ring.

b. Service transmission oil system and check for leaks.

6-106. SPINDLE (TRANSMISSION).

6-107. DESCRIPTION — SPINDLE (TRANSMISSION). Two spindles (2, figure 6-10) are installed, one on each side of the transmission case, and support the transmission to the pylon support links (11, figure 2-55).

Premaintenance Requirements for Spindle (Transmission)

Condition	Requirements
Model	OH-58A/C
Part No. or Serial No.	All
Special Tools	None
Test Equipment	Magnetic Particle Inspection Unit
Support Equipment	None
Minimum Personnel Required	Two
Consumable Materials	None
Special Environmental Conditions	None
References	TM 1-1520-254-23

Two spindles (2, figure 6-10) are installed, one on each side of the transmission case, and support the transmission to the pylon support links (11, figure 2-55)

6-108. INSPECTION — SPINDLE (TRANSMISSION). Inspect spindles (2) for cracks, nicks, and damage to threads of studs. No cracks allowed. If a crack in the spindle (transmission) is suspected, refer to TM 1-1520-254-23, Technical Manual Aviation Unit Maintenance (AVUM) and Aviation Intermediate Maintenance (AVIM) Manual Nondestructive Inspection Procedures for OH-58 Helicopter Series.

6-109. REMOVAL — SPINDLE (TRANSMISSION).

a. Remove nuts (16, figure 6-10), and washer (3).

b. Remove spindle.

6-110. REPAIR/REPLACEMENT — SPINDLE (TRANSMISSION). Repair is limited to removal and replacement with authorized serviceable items. Refer to TM 55-1520-228-23P.

6-111. INSTALLATION — SPINDLE (TRANSMISSION).

a. Clean mounting areas of spindle (2) and transmission and apply sealing compound (C131).

b. Install spindle (2), washers (3), and nuts (16). Torque nuts (16) **160 TO 190 INCH-POUNDS**.

c. Apply sealing compound (C131) to faying surfaces of spindle.

SECTION IV. TAIL ROTOR DRIVESHAFT

6-112. TAIL ROTOR DRIVESHAFT. (Prior to MWO 55-1520-228-50-25.)

NOTE

Tail rotor driveshaft after compliance with MWO 55-1520-228-50-25, refer to paragraph 6-158.

6-113. DESCRIPTION — TAIL ROTOR DRIVESHAFT. The tail rotor driveshaft is made up of the following four sections; the forward short shaft (3, figure 6-18), the oil cooler fan shaft (4), the aft short shaft (6), and the long shaft (10, figures 6-20 and 6-21). Flexible laminated steel disc couplings are used to connect the shaft sections, freewheeling assembly, and the tail rotor gearbox.

a. Original bearing hangers are split, with clamping bolt and shim to adjust fit with the bearing. This permits the bearing to be aligned within the hanger regardless of the angle of the hanger support on the tailboom.

b. Improved bearing hangers incorporate a clinch bolt, clamping nut, spacer, and spring.

6-114. LUBRICATION — TAIL ROTOR DRIVESHAFT. Lubricate the tail rotor driveshaft in accordance with figure 1-5. Disassemble as required to gain access to adapters.

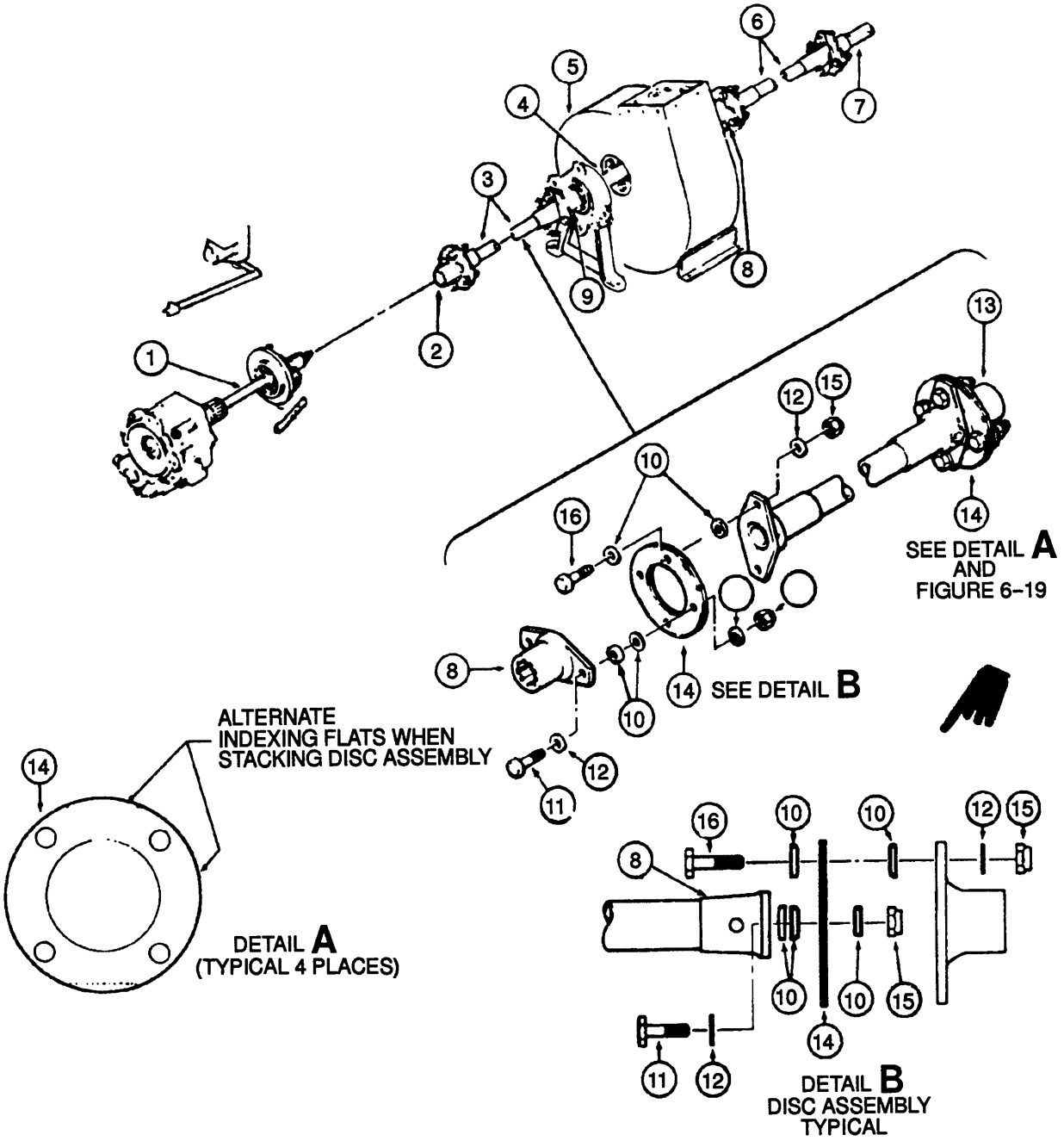

1. Shaft, Freewheeling
2. Adapter
3. Shaft Assembly, Short
4. Shaft
5. Housing Assembly
6. Shaft
7. Shaft Assembly Drive
8. Adapter
9. Adapter
10. Washer, Beveled
11. Bolt, AN174-7A
12. Washer, Flat
13. Adapter
14. Disc Assembly
15. Nut
16. Bolt, AN174-6A

Figure 6-18. Driveshafts - Tail Rotor (Forward Short Shaft Typical (Sheet 1 of 2)

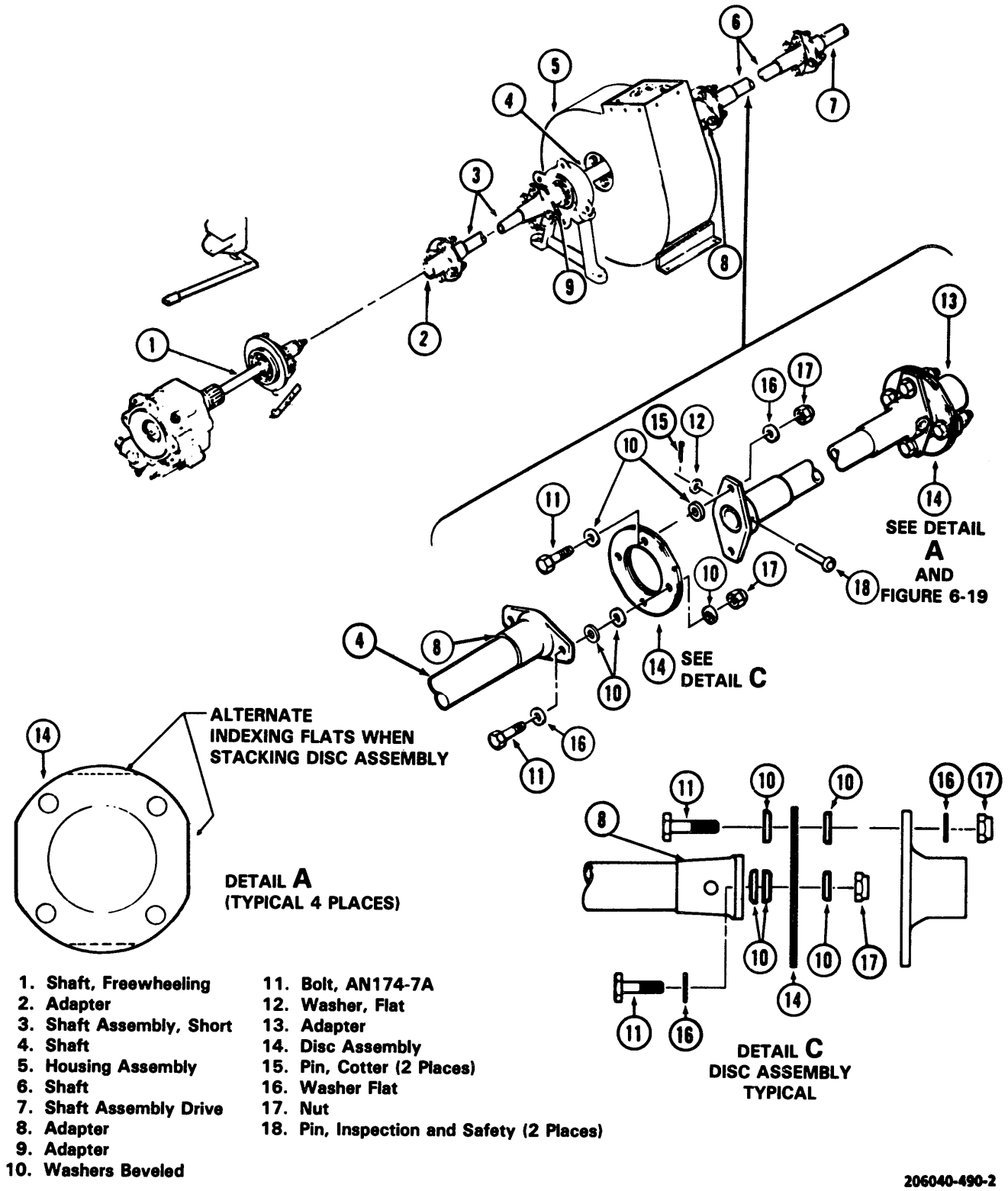

1. Shaft, Freewheeling
2. Adapter
3. Shaft Assembly, Short
4. Shaft
5. Housing Assembly
6. Shaft
7. Shaft Assembly Drive
8. Adapter
9. Adapter
10. Washers Beveled
11. Bolt, AN174-7A
12. Washer, Flat
13. Adapter
14. Disc Assembly
15. Pin, Cotter (2 Places)
16. Washer Flat
17. Nut
18. Pin, Inspection and Safety (2 Places)

Figure 6-18. Driveshafts - Tail Rotor (Forward Short Shaft Typical (Sheet 2 of 2)

6-115. INSPECTION — TAIL ROTOR DRIVESHAFT.

Premaintenance Requirements for Tail Rotor Driveshaft

Condition	Requirements
Model	OH-58A/C
Part No. or Serial No.	All
Special Tools	None
Test Equipment	Fluorescent Penetrant Inspection Unit
Support Equipment	None
Minimum Personnel Required	Two
Consumable Materials	None
Special Environmental Conditions	None
References	TM 1-1520-254-23

a. Inspect shafts for scratches and damage. Surface of shafts (steel and aluminum) are to be smooth and unmarred.

b. Inspect long driveshaft for wear adjacent to rubber bearing collar. This wear will be characterized by a bright polished ring usually no larger than **0.040** inch in width and running next to or from under the collar. When this wear is found, bearing should be replaced and shaft checked dimensionally. Maximum wear on diameter beneath bearing collar is **0.006** inch, determined by measuring the difference in diameter between the worn and unworn area. When wear is more than **0.006** inch, replace driveshaft and bearing collar and inspect bearing.

c. Check tail rotor shafts for security of bonding of coupling adapters to ends of shafts, and security of bonding of splined adapter on forward end of long shaft. To test bond, attempt to twist adapter on end of shaft and place end of thumb on head of pin and rotate pin in its hole. If pin is tight in hole and will not turn with thumb pressure, remove pin and check for failure of bond between adapter and end of shaft. Replace shaft if bond has failed.

(1) Check that splined adapter on short shaft is not seized by grasping and moving short shaft fore and aft.

(2) Check that remaining splined adapters are not seized by flexing disc assembly and adapter with fingers and thumb. Inspect for fore and aft movement at coupling disc.

NOTE

Do not attempt to move long shaft forward or aft.

d. Inspect visible area of splines for nicks, dents, scratches, and corrosion. One third of the spline teeth may be corroded or damaged (dented, nicked, or scratched) if damage does not reduce the driving (profile) area by more than **5%** and:

(1) No scratches or other damage deeper than **0.004** inch or longer than **0.250** inch exist.

(2) No three consecutive teeth are damaged.

(3) Raised material is smoothed off.

(4) Measuring splines across two **0.120** inch diameter pins in minimum O.D. of **1.1070** is obtained.

(5) Damage in other areas is not deeper than **0.006** inch or covering not more than **10%** of area.

e. Inspect the coupling discs for cracks, wear, or damage. Refer to paragraph 6-124. No cracks allowed. If a crack in the discs is suspected, refer to TM 1-1520-254-23, Technical Manual Aviation Unit Maintenance (AVUM) and Aviation Intermediate Maintenance (AVIM) Manual Nondestructive Inspection Procedures for OH-58 Helicopter Series.

f. Inspect bearing collars (12, figures 6-20 and 6-21) as follows:

(1) Ensure that sealing compound on both shaft and the bearing collar has not separated from bonding surfaces.

(2) Replace collar or collars P/N 206-040-319-7 and/or P/N 206-040-319-9 when material is hard and/or cracked completely through to the surface of the driveshaft except as noted in step (3).

NOTE

If P/N 206-040-315-1 needs replacing use P/N 206-040-319-7 or P/N 206-040-319-9.

(3) Cracks at either end of collar that do not extend more than **0.300** from EOP may be trimmed to eliminate crack.

NOTE

Collars P/N 206-040-315-1 are not to be trimmed or sealed.

g. Inspect hanger bearings as follows:

NOTE

Lubrication expelled from the bearing is not cause for rejection of the bearing. The expelled lubrication usually is the result of over lubrication. Do not wash, clean, or spray the bearing or hanger assembly with any type of solution during inspection. Use only clean cloths or shop towels to clean the assembly.

(1) Inspection for bearing roughness is similar to other single row ball bearings of this type except seal drag is more noticeable in this bearing.

(2) Inspect bearings for smoothness.

(a) Disconnect each end of shaft.

(b) Rotate the shaft by hand and apply a slight radial load on each bearing.

(c) When any roughness/drag is detected, replace the bearing.

(d) Reconnect shaft using new self-locking nut.

NOTE

Bearing wobble is generally due to the misalignment of the inner race of the bearing on the collar and the corresponding misalignment of the bearing race and driveshaft through center line. Repositioning of the bearing collar on the shaft and bearing realignment is required to correct this deficiency. Bearing slippage is a positive indication of impending bearing failure. After bearing installation and alignment, slippage index marks should be painted from shaft to collar, collar to inner race, and outer race to hanger. Slippage marks should be check for evidence of movement after first flight following MOC and thereafter on a daily basis. If slippage has occurred during flight, the assembly must be reshimmed and/or realigned. If slippage is noted on hard type hangers during the daily inspection, bearing failure is imminent and bearing shall be replaced.

Bearings may move in the spring type hangers in certain normal conditions, when outer race slippage marks show evidence of motion, ascertain that the bearing has not failed and spun in the hanger. Evidence of motion between the bearing inner race and collar or between collar and shaft or a defective bearing is not acceptable and requires corrective action.

(3) Inspect bearing seal for deterioration. Replace bearing if seal is deteriorated.

NOTE

Small holes in rubber seals are acceptable on transfer inspection aircraft. These holes are caused by field personnel lubricating the bearing with a hypodermic needle.

h. Inspect hanger for cracks, missing or improperly installed hardware.

NOTE

There is no established criteria for wear of the bearing hangers and associated hardware. Replacement of worn parts is required only to correct unacceptable high frequency vibrations.

6-116. REMOVAL — TAIL ROTOR DRIVESHAFT.

Premaintenance Requirements for Driveshaft

Condition	Requirements
Model	OH-58A/C
Part No. or Serial No.	All
Special Tools	None
Test Equipment	None
Support Equipment	None
Minimum Personnel Required	Two
Consumable Materials	(C38) (C55) (C91) (C116) (C118) (C126)
Special Environmental Conditions	None

NOTE

Any section of driveshaft, except the fan shaft, may be removed without removing the other sections.

a. Remove forward short shaft. Refer to paragraph 6-132.

b. Remove oil cooler fan shaft. Refer to paragraph 6-139.

c. Remove aft short shaft. Refer to paragraph 6-148.

d. Remove long shaft. Refer to paragraph 6-155.

6-117. REPAIR — TAIL ROTOR DRIVESHAFT.

a. Aluminum driveshaft:

(1) Area under and immediately adjacent to rubber collars with scratches up to **0.005** inch deep, axial or circumferential, but no longer than **1/4** of circumference will be blended out with crocus cloth (C55). Scratches and wear about the entire circumference must not exceed **0.002** inch. Difference between unworn diameter and worn diameter after cleanup must not exceed **0.006** inch. Treat blended areas with chemical conversion coating (38), then spray the bearing collar areas with zinc chromate primer (C118), and allow to dry prior to installation of the collars.

(2) Other driveshaft areas. Scratches up to **0.005** inch deep, axial or circumferential, but not longer than **1/4** of circumference will be blended out with crocus cloth (C55) not to exceed **0.006** inch after cleanup. Scratches up to **0.002** inch deep about entire circumference will be blended out with maximum stock removal (including depth of scratch) not to exceed **0.003** inch. Treat blended areas with chemical conversion coating (C38), then paint the area with lacquer (C91).

b. Steel driveshaft:

(1) Scratches up to **0.010** inch depth, axial or circumferential, but no longer than **1/4** of circumference will be blended out with sandpaper (C126). Lightly sand entire driveshaft, except for flat surfaces of couplings, to ensure good paint adhesion. Paint entire driveshaft, except for flat surfaces of couplings, with epoxy polyamide primer (C116).

(2) Scratches up to **0.005** inch depth around the entire circumference will be blended out with sandpaper (C126). Difference between unworn diameter and blended diameter, after cleaning must not exceed **0.010** inch. Lightly sand entire driveshaft, except for flat surfaces of couplings, to ensure good paint adhesion. Paint entire driveshaft, except for flat surfaces of couplings with epoxy polyamide primer (C116).

(3) Driveshafts having deteriorated cadmium plating will be lightly sanded, except for flat surfaces of couplings, to remove surface corrosion and ensure good paint adhesion. Paint entire driveshaft, except for flat surfaces of couplings, with epoxy polyamide primer (C116).

6-118. INSTALLATION — TAIL ROTOR DRIVESHAFT.

a. Install forward short shaft. Refer to paragraph 6-134.

b. Install oil cooler fan shaft. Refer to paragraph 6-143.

c. Install aft short shaft. Refer to paragraph 6-150.

d. Install long shaft. Refer to paragraph 6-157.

6-119. DISC ASSEMBLY.

6-120. DESCRIPTION — DISC ASSEMBLY. Flexible laminated steel disc couplings, (4, figure 6-19) are used to connect the shaft section, freewheeling assembly, and the tail rotor gearbox.

6-121. INSPECTION — DISC ASSEMBLY. See paragraph 6-115 for inspection while installed on tail rotor driveshaft.

6-122. REMOVAL — DISC ASSEMBLY.

CAUTION

After a disc assembly has been run on a helicopter, disc will not be changed from original stack up. Changing of sequence or reversing of indexing flats will render disc assembly unserviceable, and the disc assembly must be replaced with a new, properly stacked disc assembly.

Remove four bolts (2 and 7, figure 6-19), beveled washers (3), flat washers (5), and nuts (6). Support driveshaft (1) and carefully remove disc assembly (4) from adapters (8).

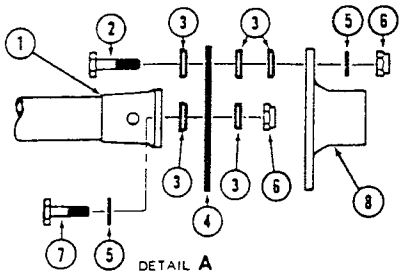

NOTE

AN174-H6A bolts are used two places on each forward short shaft disc assembly. AN174-H7A bolts are used four places on each short shaft disc assembly. AN174-H7A bolts are used four places on each long shaft disc assembly. This figure reflects a typical stackup for the couplings on the aft end of three shaft assemblies (forward short shaft, aft short shaft, and long shaft). No threads are permitted to bear in adapters (item 1 and item 8) or the disc assembly (item 4). One size longer bolt, with a minimum of one thin washer and a maximum of one thick and one thin washer may be used under bolt head or nut next to driveshaft or adapter to correct for this condition. Opposing bolt lengths and washers must be equal. Under no condition will the beveled washer stackup be altered.

1. Shaft Assembly
2. Bolt, AN174-7A
3. Washer-Beveled
4. Disc Assembly
5. Washer, Flat
6. Nut
7. Bolt, AN174-H7A (See Note)
   Bolt, AN174-H6A (See Note)
8. Adapter (Splined)

Figure 6-19. Aft Disc Assemblies

6-123. CLEANING — DISC ASSEMBLY.

WARNING

Degreasing Solvent is combustible and toxic to eyes, skin, and respiratory tract. Wear protective gloves and goggles/face shield. Avoid repeated or prolonged contact. Use only in well-ventilated areas (or use approved respirator as determined by local safety/industrial hygiene personnel). Keep away from open flames or other sources of ignition.

Clean disc assembly and adapter with degreasing solvent (C62) and wipe clean with lint-free cloth.

6-124. INSPECTION — DISC ASSEMBLY.

Premaintenance Requirements for Disc Assembly

Condition	Requirements
Model	OH-58A/C
Part No. or Serial No.	All
Special Tools	None
Test Equipment	Fluorescent Penetrant Inspection Unit
Support Equipment	None
Minimum Personnel Required	Two
Consumable Materials	None
Special Environmental Conditions	None
References	TM 1-1520-254-23

CAUTION

Do not mix old and new discs. Do not change sequence of reverse indexing flats.

a. Inspect discs for cracking, wear, and damage. No damage of any type permitted. Disc assemblies vary between **9 to 12** plates, each plate of **0.010 to 0.014** inch thickness. Stacked discs in an assembly will vary between **0.115 to 0.127** inch. Any gap between two of the assembled discs must not exceed **0.005** inch at any point. If a crack in the disc is suspected, refer to TM 1-1520-254-23, Technical Manual Aviation Unit Maintenance (AVUM) and Aviation Intermediate Maintenance (AVIM) Manual Nondestructive Inspection Procedures for OH-58 Helicopter Series.

b. Inspect bolts, washers, and nuts for obvious damage and wear.

6-125. REPAIR — DISC ASSEMBLY.

a. No repair is authorized for the disc.

b. Replace defective bolts, washers, and nuts.

CAUTION

Grain of each disc runs parallel to the indexing flat edges. When assembling new disc assembly it is necessary to alternate indexing flats to obtain alternate grain direction. DO NOT ALTER DISC STACK-UP SEQUENCE. Install beveled side of washers toward disc assembly. If beveled washers are installed with flat side of washer next to disc, premature failure is apt to occur.

NOTE

On each of the five disc assemblies torque the nuts in an alternate pattern. Tighten one nut to **20 INCH-POUNDS**, then alternate **180** degrees and tighten the opposite nut the same amount. Repeat this procedure on all nuts increasing the torque **15 TO 20 INCH-POUNDS** increments until the final torque value is reached.

6-126. POSITION — DISC ASSEMBLY

a. Position disc assembly (4, figure 6-19) between shaft assembly (1) and adapter (8) and secure using

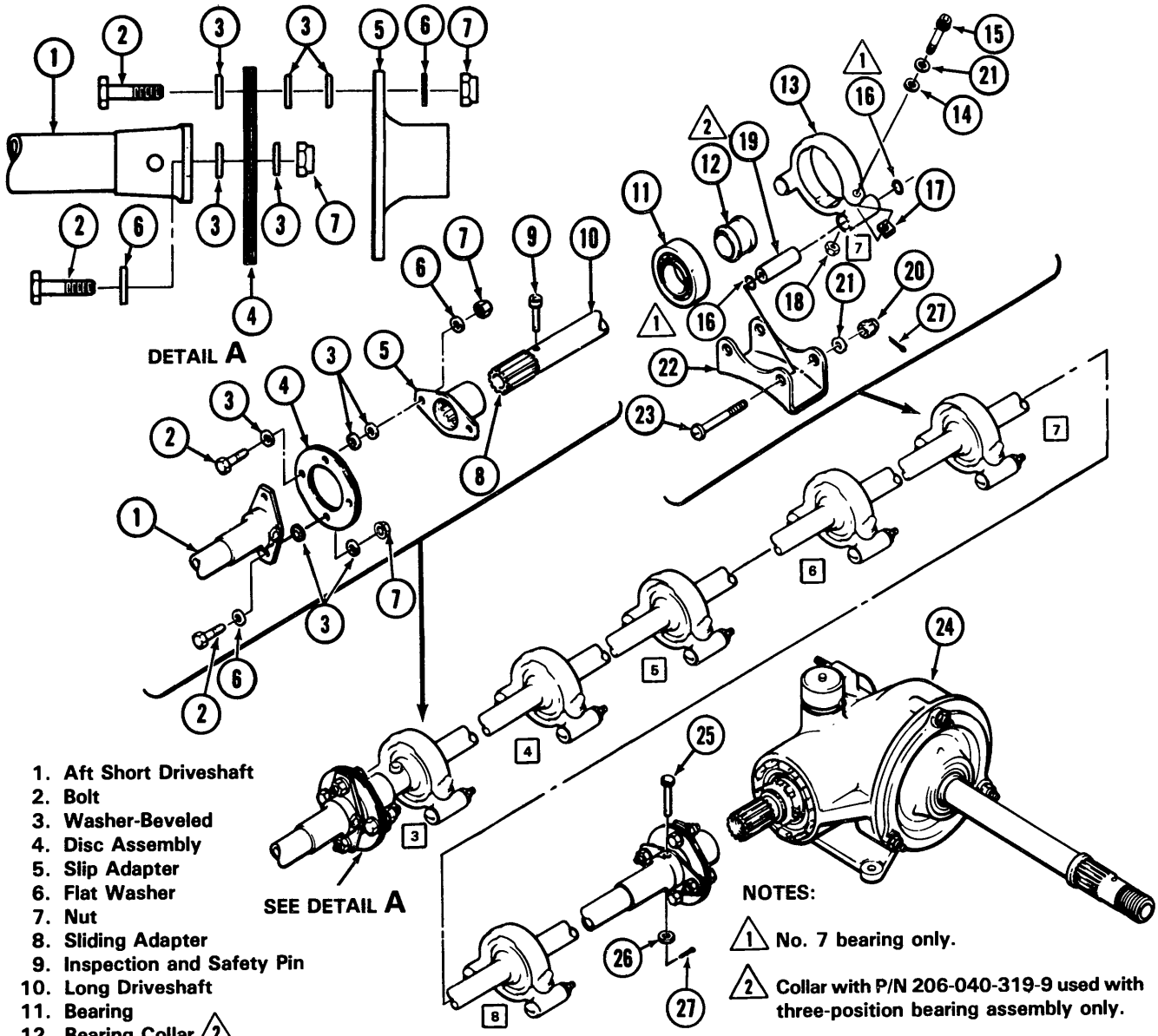

1. Aft Short Driveshaft
2. Bolt
3. Washer-Beveled
4. Disc Assembly
5. Slip Adapter
6. Flat Washer
7. Nut
8. Sliding Adapter
9. Inspection and Safety Pin
10. Long Driveshaft
11. Bearing
12. Bearing Collar △2
13. Bearing Hanger
14. Washer
15. Bolt
16. Packing △1
17. Shim
18. Clinch Nut
19. Bushing
20. Nut
21. Washer
22. Bearing Support
23. Screw
24. Tail Rotor Gearbox
25. Inspection and Safety Pin
26. Flat Washer
27. Cotter Pin

NOTES:

△1 No. 7 bearing only.

△2 Collar with P/N 206-040-319-9 used with three-position bearing assembly only.

3. Spacers (17) are available in 0.002 inch thickness difference:
   206-040-347-1 - 0.060
   206-040-347-3 - 0.058
   206-040-347-5 - 0.056
   206-040-347-7 - 0.054
   206-040-347-9 - 0.062

   Use proper thickness spacer to obtain proper fit.

4. Numbers in □ denote bearing position.

206040-492

Figure 6-20. Long Driveshaft Installation — Tail Rotor (Hard Type)

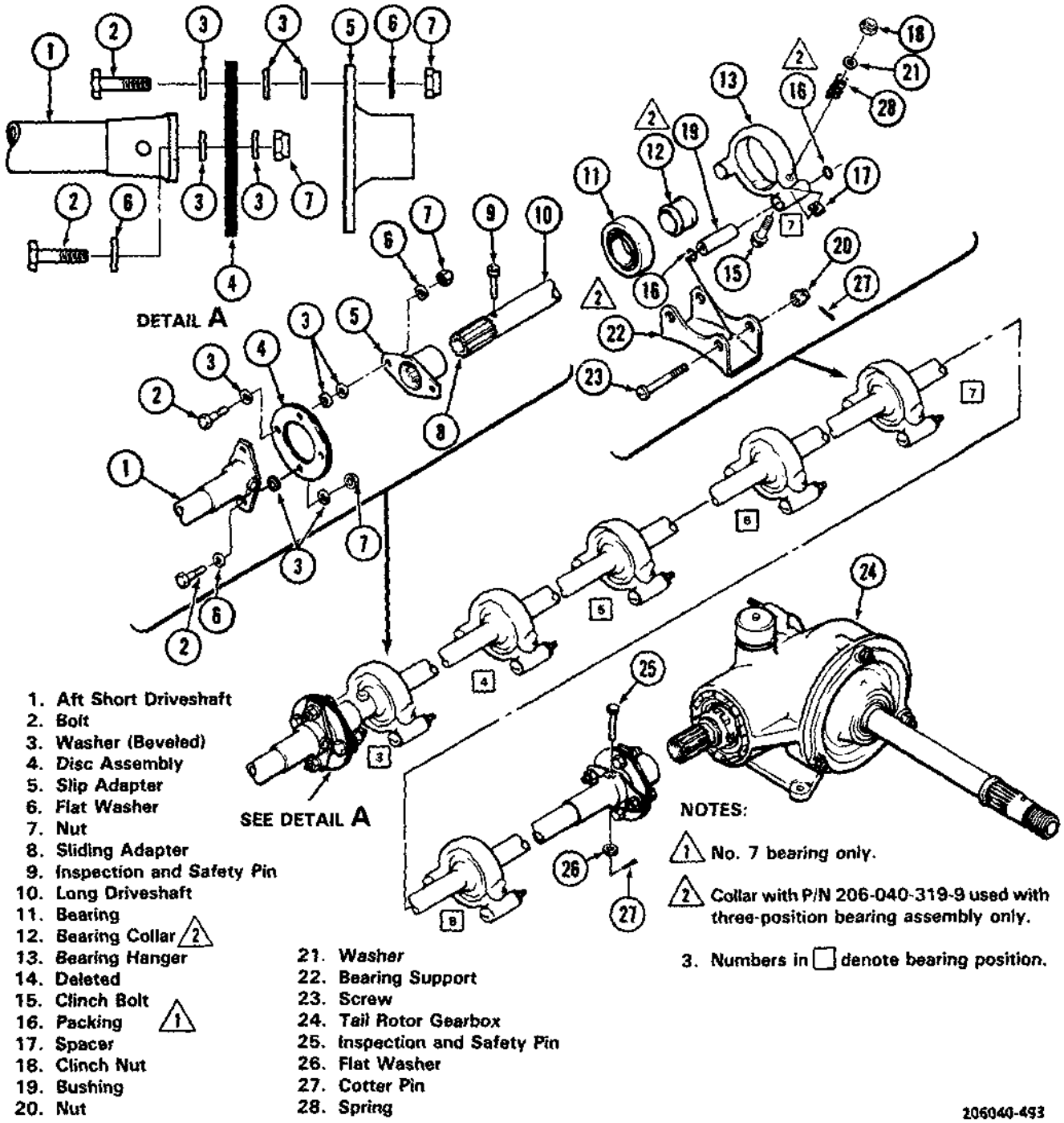

Figure 6-21. Long Driveshaft Installation — Tail Rotor (Spring Type)

four bolts (2 and 7), beveled washers (3, beveled washers with rounded edge next to disc assembly and beveled washers with rounded edge next to adapter), flat washers (5), and nuts (6).

b. Torque four nuts (6) **50 TO 70 INCH-POUNDS**.

c. After disc assembly is installed, inspect for distortion resulting in gaps between the individual discs. If any gaps are detected by visual examination, measure gaps with a feeler gage. Maximum allowable gap is **0.005** inch. If any gaps are found which exceed this limit, loosen bolts, rotate disc back and forth, and uniformly tighten bolts to required torque. Re-inspect for gaps, if gaps exceed limits replace disc assembly.

6-127. ADJUSTMENT AND ALIGNMENT — TAIL ROTOR DRIVESHAFT.

a. Original (Hard Type) Bearing Hangers.

WARNING

All maintenance functions to be performed on the tail rotor driveshaft assembly during runup will be accomplished from the right side of the helicopter. Extreme care must be taken to prevent hands, clothing or tools from becoming entangled with operational components. Stay clear of the tail rotor.

(1) For initial helicopter runup, torque bearing hanger clamp bolts **15 INCH-POUNDS** to allow bearing to align.

(2) Runup at least **15** minutes before checking for wobble.

(3) Hangers must not wobble in free state more than **0.004** inch measured at hanger clamp ring during shaft rotation and must be centered in the bearing support bracket within **0.060** inch.

NOTE

There is no established criteria for wear of the bearing hangers and associated hardware. Replacement of worn parts is required to correct unacceptable high frequency vibration.

(4) After runup, torque bolts **50 TO 70 INCH-POUNDS**. Lockwire (C96) after shutdown. Using acrylic lacquer (C92), paint slippage mark from driveshaft assembly to rubber collar, to inner race of bearing and from outer race of bearing to bearing hanger.

(5) Maintenance operational check is required. Refer to TM 55-1500-328-25.

(6) After maintenance operational check, inspect slippage mark. Any evidence of slippage requires replacement of shim (17, figure 6-20) with a shim **0.002** inch smaller.

b. Improved (Spring Type) Bearing Hangers.

(1) Disconnect disc coupling at forward end of long driveshaft and remove aft short aluminum shaft.

(2) Back off nut (1, figure 6-22) to end of clinch bolts. Do not remove nut.

(3) Insert wedge in slot on the bearing hanger and open slightly taking care not to damage the hanger.

(4) Rotate shaft by turning the tail rotor blade and hub assembly.

(5) Visually inspect the bearing for wobble.

(6) If no wobble exists, remove wedge and torque **50 TO 70 INCH-POUNDS**.

(7) Repeat steps (2) through (6) for each bearing.

(8) Install aft short shaft removed in step (1).

WARNING

Do not grasp tail rotor driveshaft while operating. Secure articles of clothing, rags, etc., to prevent wrapping about shaft.

Last two hangers will be adjusted from right (pilot) side of tailboom only. Stay clear of tail rotor blade when walking from one side of tailboom to the other.

(9) Ground run helicopter. During runup, insert a flat non-sharp tool in the parting line of bearing

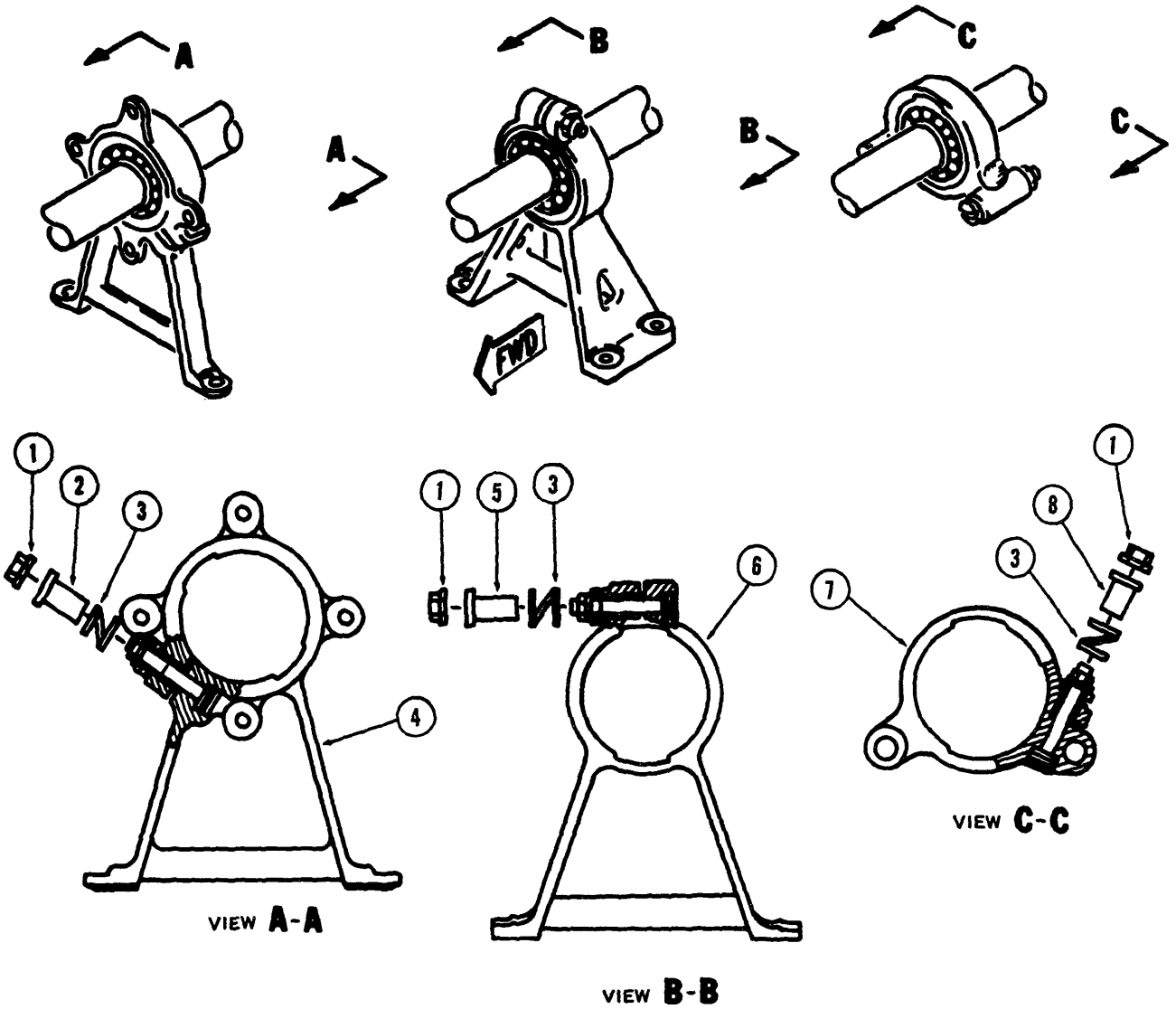

NOTES

1 DIM "A" is 0.705 to 0.710 inch for item 2

2 DIM "A" is 0.545 to 0.550 inch for item 8

3 DIM "A" is 0.820 to 0.825 inch for item 5

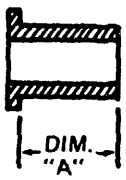

1. Nut
2. Spacer (Note 1)
3. Spring
4. Hanger Bearing
5. Spacer (Note 3)
6. Hanger Bearing
7. Hanger Bearing
8. Spacer (Note 2)

206040-494

Figure 6-22. Improved (Spring Type) Bearing Hangers

hangers. Pry up to relieve tension from spring, thus allowing bearing to self align.

(10) Remove tool and allow hanger to return to spring-loaded condition.

(11) Repeat steps (9) and (10) for each bearing and hanger.

(12) Continue ground run for **15** minutes, then shut down. During coastdown, check bearing wobble. This is indicated by noting wobble of bearing hanger when felt by hand. Eliminate wobble by repeating steps ((9), (10), and (12)).

(13) After shutdown, disconnect disc coupling at forward end of long driveshaft and remove aft short shaft.

(14) Slowly rotate shaft by turning the tail rotor blades and hub assembly by hand.

(15) Visually inspect bearing and hangers for wobble. Bearing hangers must be centered within **0.060** inch of midpoint of bearing supports.

NOTE

A dial indicator, if locally available, may be used for this purpose. If the bearing inner race and collar are positioned square to the tail rotor shaft within **0.004** inch indicated runout, the bearing inner race and collar position is satisfactory.

(16) If no wobble exists, reinstall aft short shaft. If wobble does exist, repeat steps (9) through (16) to remove wobble.

(17) Paint slippage marks using acrylic lacquer (C92) from shaft to collar, collar to inner race and from bearing outer race to hanger.

(18) To prevent corrosion damage to the tail rotor driveshaft, mask bearings and collars with tape (C143), then spray paint with acrylic lacquer (C91).

(19) Maintenance Operational Check is required. Refer to TM 55-1500-328-25.

(20) After Maintenance Operational Check, inspect slippage marks. Any evidence of slippage requires inspection in accordance with paragraphs 6-115 and 6-127, step b.

6-128. FORWARD SHORT SHAFT.

6-129. DESCRIPTION — FORWARD SHORT SHAFT. The forward short shaft (3, figure 6-18), is a component section of the tail rotor driveshaft. Flexible adapter complete coupling of short shaft to main driveshaft and oil cooler fan driveshaft.

6-130. LUBRICATION — FORWARD SHORT SHAFT. Refer to figure 1-5.

6-131. INSPECTION — FORWARD SHORT SHAFT. Refer to paragraph 6-115 for required inspection.

6-132. REMOVAL — FORWARD SHORT SHAFT. Refer to figure 6-18. Remove two opposed bolts (16), washers (10 and 12), and nut (15) from splined couplings at each end of forward short shaft (3). Leave laminated disc assemblies assembled on forward short shaft. Remove forward short shaft (3) from helicopter.

6-133. REPAIR — FORWARD SHORT SHAFT. Refer to paragraph 6-117 for repairs.

6-134. INSTALLATION — FORWARD SHORT SHAFT.

NOTE

Prior to installation lubricate shaft and adapter splines identified in figure 1-5.

a. Position forward short shaft between freewheeling shaft (1, figure 6-18) and oil cooler shaft (22, figure 6-23).

CAUTION

Install beveled side of washers toward disc assembly. If beveled washers are installed with flat side of washer next to disc this will result in premature disc failure.

NOTE

On each of the five disc assemblies torque the nuts in an alternate pattern. Tighten one nut to **20 INCH-POUNDS**, then alternate **180** degrees and tighten the opposite nut the same amount. Repeat this procedure on all nuts increasing the torque **15 TO 20 INCH-POUNDS** increments until the final torque value is reached.

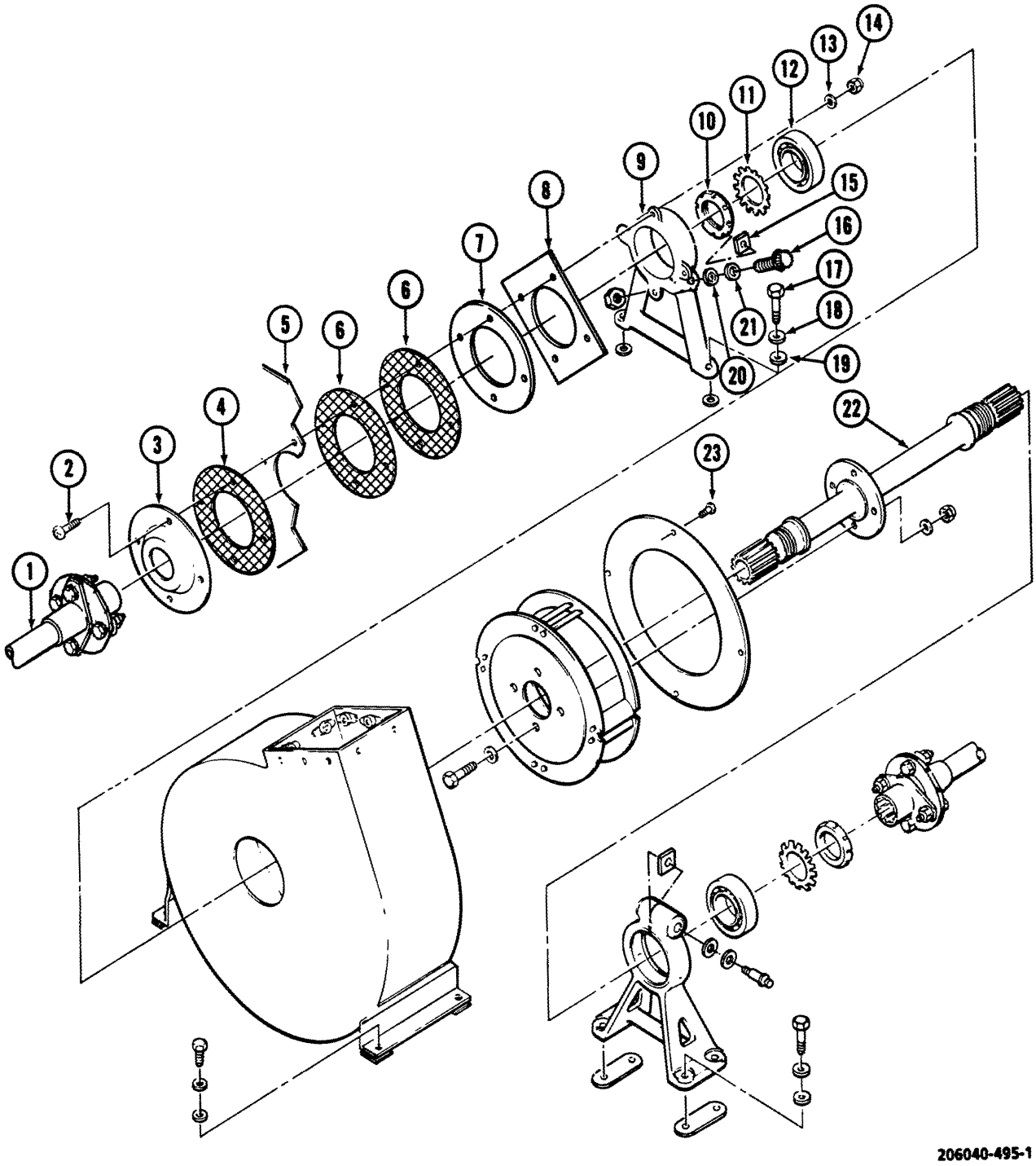

Figure 6-23. Oil Cooling Blower and Shaft Assembly (Sheet 1 of 3)

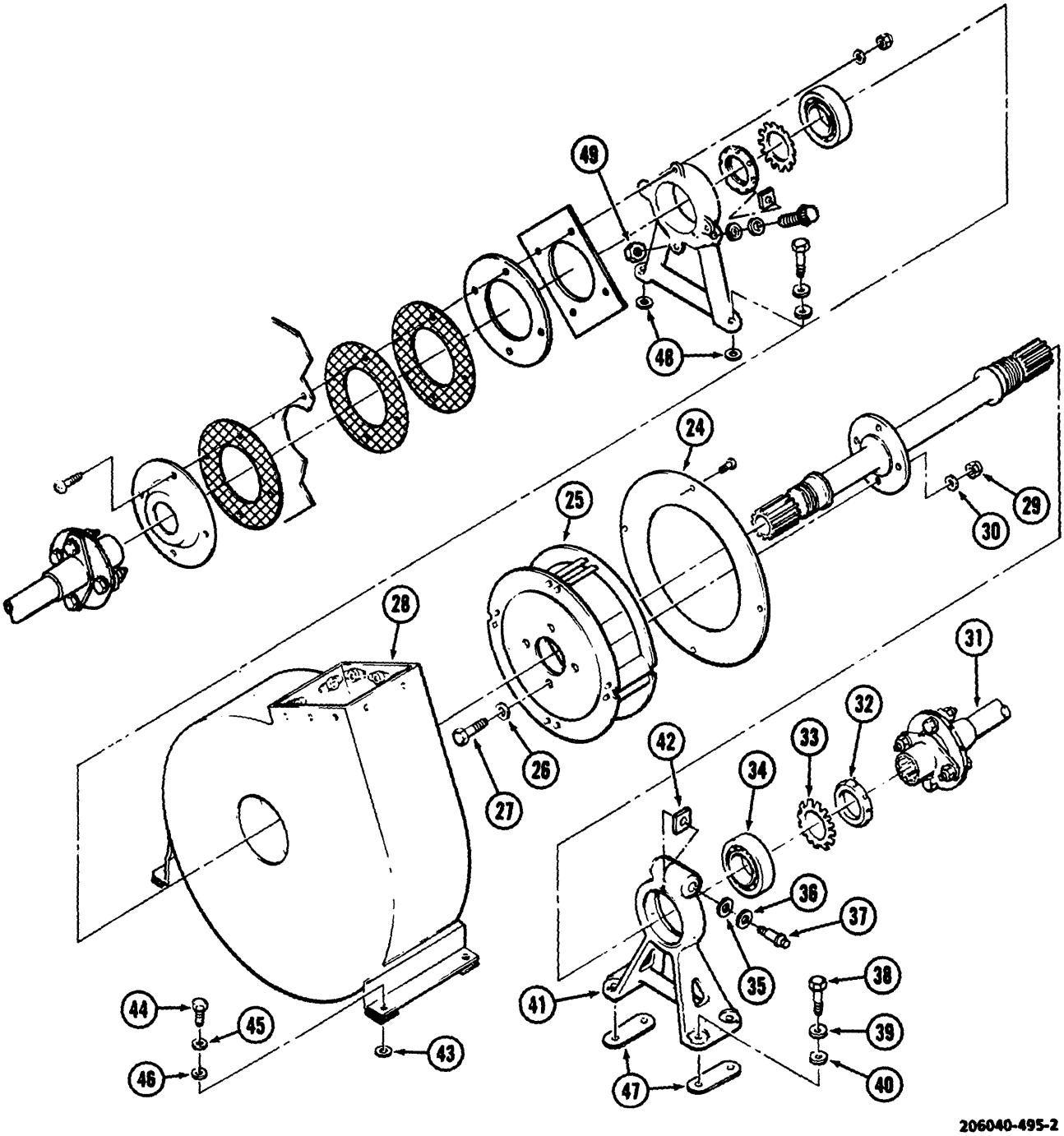

Figure 6-23. Oil Cooling Blower and Shaft Assembly (Sheet 2 of 3)

1. Forward Short Shaft
2. Screw
3. Retaining Screw
4. Gasket
5. Aft Firewall
6. Gasket
7. Doubler
8. Dissimilar Metals Tape (C138)
9. Hanger Bearing
10. Nut
11. Key Washer
12. Bearing
13. Aluminum Washer
14. Nut
15. Spacer
16. Bolt
17. Bolt
18. Flat Steel Washer
19. Aluminum Washer
20. Flat Aluminum Washer
21. Flat Steel Washer
22. Shaft
23. Screw
24. Inlet Plate
25. Rotor Assembly
26. Flat Steel Washer
27. Bolt
28. Housing Assembly
29. Nut
30. Flat Steel Washer
31. Aft Short Shaft
32. Nut
33. Key Washer
34. Bearing
35. Flat Aluminum Washer
36. Flat Steel Washer
37. Bolt
38. Bolt
39. Flat Steel Washer
40. Flat Aluminum Washer
41. Hanger Assembly
42. Spacer
43. Shim
44. Bolt
45. Flat Steel Washer
46. Flat Aluminum Washer
47. Shim
48. Shim
49. Clinch Nut

Figure 6-23. Oil Cooling Blower and Shaft Assembly (Sheet 3 of 3)

NOTE

Bolts (11, figure 6-18) may be installed in either direction, for ease of maintenance. Diametrically opposed bolts must be in same direction.

b. Install bolts (11) washers (10) and (16), and nuts (17). Refer to figure 6-18.

c. Torque four nuts (15) **50 TO 70 INCH-POUNDS**.

6-135. OIL COOLING BLOWER AND SHAFT ASSEMBLY.

6-136. DESCRIPTION — OIL COOLING BLOWER AND SHAFT ASSEMBLY. The cooler blower is mounted on the structure, aft of the firewall and is driven by the tail rotor driveshaft. The squirrel cage type impeller is mounted on a flanged shaft which is mounted in bearing hangers. The blower shaft connects the forward and aft short tail rotor driveshafts and is part of the tail rotor driveshaft system. The oil cooler blower provides cooling air for the engine oil system and transmission oil system. The engine oil cooler mounts above the cooling blower while a flexible duct conveys cooling air forward to the transmission oil cooler.

6-137. CLEANING — OIL COOLING BLOWER AND SHAFT ASSEMBLY.

a. Prepare two to four quarts of cleaning solution consisting of one part cleaning compound (C43) (water soluble cleaner) to four parts of clean water.

b. Remove aft fairing (5, figure 2-10) by loosening turnlock fasteners.

c. Disconnect hose assembly at the engine oil cooler blower housing by removing clamps. Refer to paragraph 4-76.

d. Temporarily reposition the hose assembly by pushing down on the hose assembly and pulling outward from the oil cooler blower housing.

NOTE

Position hose assembly to ensure that the cleaning solution does not enter the hose assembly opening during flushing procedures.

e. Operate engine at idle speed **62% to 63%** N1 during cleaning procedure.

f. Spray the cleaning solution into the center of the oil cooler housing shaft ring assembly.

CAUTION

Do not spray the cleaning solution directly onto the blower assembly blades, balance could be affected.

g. Spray the cleaning solution into the center of the oil cooler blower assembly at the rate of one quart to **9 to 11** seconds until **2 to 4** quarts have been utilized.

h. After shutdown, visually inspect oil cooler blower assembly and oil cooler assembly for cleanliness and evidence of surface corrosion.

i. Repeat above procedures as necessary until the oil cooler and oil cooler blower assembly are clean.

j. Install hose assembly on the oil cooler blower assembly and secure with clamp.

k. Install aft fairing assembly and secure turnlock fasteners.

6-138. INSPECTION — OIL COOLING BLOWER AND SHAFT ASSEMBLY. (Figure 6-23.)

Premaintenance Requirements for Cooling Blower and Shaft Assembly

Condition	Requirements
Model	OH-58A/C
Part No. or Serial No.	All
Special Tools	None
Test Equipment	Magnetic Particle Inspection Unit Eddy Current Inspection Unit
Support Equipment	None
Minimum Personnel Required	Two
Consumable Materials	None
Special Environmental Conditions	None
References	TM 1-1520-254-23

a. Inspect hangers and shaft for cracks and other mechanical damage. No cracks allowed. If a crack in the hangers of the oil cooling blower assembly or in the shaft of the blower shaft assembly is suspected, refer to TM 1-1520-254-23, Technical Manual Aviation Unit Maintenance (AVUM) and Aviation Intermediate Maintenance (AVIM) Manual Nondestructive Inspection Procedures for OH-58 Helicopter Series.

b. Inspect rotor (25) for cracks, particularly at mounting flange and at individual blades. No cracks are allowed. If a crack in the rotor of the oil cooling blower assembly is suspected, refer to TM 1-1520-254-23, Technical Manual Aviation Unit Maintenance (AVUM) and Aviation Intermediate Maintenance (AVIM) Manual Nondestructive Inspection Procedures for OH-58 Helicopter Series.

c. If rotor requires refinishing, clean thoroughly and apply a very thin uniform coat of zinc chromate primer (C118).

d. Inspect housing (28) for cracks and other mechanical damage. Check for presence of drain hole in bottom of housing (28). If there is no drain hole, drill a **0.188 to 0.194** inch hole (No. 13 drill) in the bottom center of the housing approximately **0.0250** inch forward of the aft edge. No cracks allowed. If a crack in the housing of the oil cooling blower assembly is suspected, refer to TM 1-1520-254-23, Technical Manual Aviation Unit Maintenance (AVUM) and Aviation Intermediate Maintenance (AVIM) Manual Nondestructive Inspection Procedures for OH-58 Helicopter Series.

e. If there is any reason to suspect that an overspeed of the drive system has occurred, perform inspection of the hanger bearings outlined in paragraph 6-115, step, and of blower rotor.

NOTE

Oil cooler blowers other than the two listed in Chapter 1, Section V are condition items.

6-139. REMOVAL — OIL COOLING BLOWER AND SHAFT ASSEMBLY. (Figure 6-23.)

a. Remove aft fairing to gain access to cooling blower.

b. Remove forward and aft short tail rotor driveshafts attached to each end of gearshaft (22). Refer to paragraph 6-132 and paragraph 6-148.

c. Drain oil tank and remove engine oil cooler, oil fittings and lines, flexible air duct, and other components as required to provide clearance for removal of blower assembly from structure. Refer to paragraph 4-75 for oil cooler removal.

d. Remove four screws (2, figure 6-23).

CAUTION

If shims are lost or damaged and the exact thickness is not known, depot level maintenance is required. If shims are not bonded to structure, take adequate precautions to ensure that shims are reinstalled in same location.

e. Remove four bolts (44), four bolts (38), and two bolts (17). Remove fan and shaft assembly from helicopter. Identify shims (43) for reinstallation in same location. Check that shims under bearing hangers (9 and 41) are bonded to helicopter structure.

6-140. DISASSEMBLY — OIL COOLING BLOWER AND SHAFT ASSEMBLY.

a. Straighten tang of key washers (11 and 33, figure 6-23), and remove nuts (10 and 32). Hold gearshaft with spline wrench (T19), and remove nuts with spanner wrench.

b. Remove hangers (9 and 41) as follows:

(1) On original style (hard type) shown in figure 6-23, loosen bolts (16 and 37). Pivot hangers around toward the 90 degree position to bearings (12 and 34). Apply slight pressure to separate hanger from bearing (a wedge may be inserted in the slot on the hanger to open it slightly, taking care not to damage the hanger).

(2) On improved (spring type) hanger shown in figure 6-22, loosen nuts (1) and remove hangers as outlined in step a. above.

(3) Press bearings (12 and 34, figure 6-23) off gearshaft (22). Discard bearings as pressure applied to the outer race during removal damages the bearing.

(4) Remove screws (23, figure 6-23) and plate (24). Remove gearshaft and rotor from housing (28).

(5) Remove bolts (27) and remove rotor (25) from gearshaft (22).

6-141. REPAIR — OIL COOLING BLOWER AND SHAFT ASSEMBLY.

a. Rotor assembly — No repair is authorized except for rebalance. Refer to paragraph 6-142, step 6-142a.

b. Gearshaft assembly — Refer to repair procedures for steel driveshaft, paragraph 6-117, step, except that bearing sleeves, threaded areas, and splines will not be painted.

c. Splines — Refer to paragraph 6-115.

d. Housing assembly — Refer to TM 1-1500-204-23 for standard sheet metal repair procedures.

NOTE

If not previously accomplished, drill a 0.188 to 0.194 inch hole in the bottom center of the housing approximately 0.250 inch forward of the aft edge of housing assembly.

(1) Repaint housing with epoxy polyamide primer (C116) or zinc chromate primer (C118).

(2) If housing assembly (28) is generally deteriorated and damaged, replace housing assembly in lieu of repair.

e. Hanger assemblies — No repair other than dressing out minor scratches, nicks, and dents is authorized. Scratches, nicks, and dents up to **0.010** inch, except for bearing bolt, and interface areas, will be blended out with sandpaper (C126), polished with crocus cloth (C55) and touched up with epoxy polyamide primer (C116).

6-142. REASSEMBLY — OIL COOLING BLOWER AND SHAFT ASSEMBLY.

NOTE

Balance gearshaft and rotor only when a known out-of-balance condition exists. Balancer to be fabricated locally, by use of two sections of aluminum alloy angle six inches in length, set a sufficient height to allow free movement of rotor.

Rotor and gearshaft is statically balanced. The heavy side will rotate to the lowest position on the balancer. Add washers (as required) to obtain a balanced assembly.

a. Position rotor (25, figure 6-23) on gearshaft (22) from forward end as illustrated and install bolts (27), washers (26 and 30), and nuts (29). Tighten nuts (29) to align rotor with shaft but do not torque at this time. Place the gearshaft on knife edge balancer with the balancer blades positioned inboard of the keyway slots on the bearing journal surfaces. Add additional thin steel washers (30), to balance assembly as nearly as possible within the limits obtainable with one final AN960-416L washers may be used on one bolt (27), and a maximum of two AN4-6A bolts may be substituted for AN4-5A bolts (27) to obtain balance. When assembly is in balance, torque nuts (29), TO **50 TO 70 INCH-POUNDS**.

b. On original style (hard-type) bearing hangers shown on figure 6-23, fit new bearings to hangers as follows:

(1) If not previously accomplished, install spacers (15 and 42), thin aluminum washers (20 and 35), thin steel washer (21 and 36), and bolts (16 and 37) on bearing hangers. Apply a thin coat of corrosion preventive compound (C51) to grips to bolts (16 and 37), prior to installation.

(2) Hold bearing (12 and 34) **90** degrees, to notches in hangers, insert bearings one half way through hangers then rotate bearings into same plane as hangers.

(3) Check fit of bearings in hangers by same procedures as outlined for long tail rotor driveshaft. Refer to paragraph 6-157.

WARNING

Degreasing Solvent is combustible and toxic to eyes, skin, and respiratory tract. Wear protective gloves and goggles/face shield. Avoid repeated or prolonged contact. Use only in well-ventilated areas (or use approved respirator as determined by local safety/industrial hygiene personnel). Keep away from open flames or other sources of ignition.

NOTE

If bearings P/N 206-040-339-7 or -9 are being installed, corrosion preventive compound is not required.

Bearing assemblies P/N 206-040-339-3 and -5 are no longer authorized for new installations. Bearing assemblies P/N 206-040-339-7 and -9 may be used interchangeably.

(4) After bearings (12 and 34) are properly fitted to hangers remove bearings from hangers and apply a thin coating of corrosion preventive compound (C51) to mating surfaces of bearings and hangers. Thin the corrosion preventive compound with degreasing solvent (C62), if necessary, but mix solvent and compound thoroughly. Do not allow compound to contact bearing grease seals. Reinstall bearings in hangers and torque bolts (16 and 37) **50 TO 70 INCH-POUNDS**.

c. On improved (spring-type) bearing hangers shown on figure 6-22, install new bearings as follows:

WARNING

Degreasing Solvent is combustible and toxic to eyes, skin, and respiratory tract. Wear protective gloves and goggles/face shield. Avoid repeated or prolonged contact. Use only in well-ventilated areas (or use approved respirator as determined by local safety/industrial hygiene personnel). Keep away from open flames or other sources of ignition.

CAUTION

Do not allow compound to contact bearing grease seals.

NOTE

The bearing-to-hanger fit check is not required on the (spring-type) bearing hanger. If bearings P/N 206-040-339-7 or -9 are being installed, corrosion preventive compound is not required.

Bearing assemblies P/N 206-040-339-3 and -5 are no longer authorized for new installations. Bearing assemblies P/N 206-040-339-7 and -9 may be used interchangeably.

(1) Apply a thin coating of corrosion preventive compound (C51) to mating surface of bearings and hangers. If necessary, thin the corrosion preventive compound with degreasing solvent (C62).

(2) Inspect spacers (2 and 5, figure 6-22) to ensure that they are the correct length spacers. Similar, but shorter, spacers (8) could be intermixed with spacers (2 and 5). Install springs (3) on spacers (2 and 5) and insert spacers into bearing hangers (4 and 6). Install nuts (1) and torque **50 TO 70 INCH-POUNDS**.

NOTE

Beveled side of nut (32) should be installed toward the bearing.

d. Position inlet plate (24, figure 6-23) on shaft (22) aft of rotor (25). Press bearing (34) and assembled hanger (41) on aft end of shaft with the side of the hanger with the longest height dimension toward the forward end of the shaft. Install key washer (33) and nut (32). Do not torque nut at this time.

NOTE

Beveled side of nut (10) should be installed toward the bearing.

e. Position shaft (22) and rotor into housing (28). Press bearing (12) and assembled hanger (9) on forward end of shaft. Install key washer (11) and nut (10).

f. Install inlet plate (24) on housing (28) with screws (23).

g. Hold shaft (22) with spline wrench (T19), and torque nuts (10 and 32) **200 TO 300 INCH-POUNDS** with a spanner wrench. Lock nuts (10 and 32) by bending a tab of key washers into lugs of nuts.

6-143. INSTALLATION — OIL COOLING BLOWER AND GEARSHAFT ASSEMBLY. (Figure 6-23.)

Premaintenance Requirements for Installation of Oil Cooler Blower and Shaft

Condition	Requirements
Model	OH-58A/C
Part No. or Serial No.	All
Special Tools	None
Test Equipment	Torque wrench
Support Equipment	None
Minimum Personnel Required	Two
Consumable Materials	(C2) (C19) (C51) (C92) (C96) (C131) (C138)
Special Environmental Conditions	None

CAUTION

Ensure that shims at mounting points for bearing hangers (9 and 41) are in proper place on helicopter structure. If any of these shims are missing or intermixed and proper thickness is not known, depot maintenance is required to determine proper shim thickness.

a. Ensure that shims are securely positioned at the bearing hanger mount bolt holes on the deck surface. Missing or excessively damaged shims must be replaced with shims of like thickness. Loose replacement shims must be secured in position on the deck. Apply adhesive (C19) around the outer edge of the shim.

NOTE

Use dissimilar metals tape (C138) or sealing compound (C131) between doubler and bearing hanger as a corrosion preventive measure.

b. Position oil cooling blower and shaft assembly on helicopter. Place gasket (4) and retaining plate (3) on forward side of firewall and install screws (2). Place two gaskets (6), doubler (7), and dissimilar metals tape (C138) (8) between firewall and hanger (9). Install washers (13) and nuts (14). Do not tighten nuts (14) at this time.

WARNING

Acetone is extremely flammable and toxic to eyes, skin, and respiratory tract. Wear protective gloves and goggles/face shield. Avoid repeated or prolonged contact. Use only in well-ventilated areas (or use approved respirator as determined by local safety/industrial hygiene personnel). Keep away from open flames, sparks, hot surfaces or other sources of ignition.

c. Check that original shims (43) are bonded in place under housing (28). If found unbonded, clean affected bonding area with acetone (C2), and apply a layer approximately **1/64 to 1/32** thick of adhesive (C19) to bonding area. Install bolts (44) with thin steel washer (45) under bolt heads and aluminum washers (46) next to housing. Bolt (44) at right hand, aft location is an AN3-5A bolt. The other three bolts (44) are AN3-4A. Install a right angle bracket (not illustrated) with the AN3-5A bolt.

d. Install oil cooler on housing (28). Install aft fairing temporarily and check that oil cooler and aft fairing fit properly. If required, adjust shims (43) to obtain proper fit. Remove aft fairing after proper fit is obtained.

e. Position hanger (41) and install four bolts (38) with thin steel washers (39) next to bolt heads and aluminum washers (40) next to hanger. Do not torque bolts at this time.

f. Install two bolts (17) with thin steel washers (18) next to bolt heads and aluminum washers (19) next to hangers. Do not torque bolts at this time.

g. Check fit of hanger (9) to firewall (5). If firewall is deflected in excess of **3/32 inch**, move one gasket (6) to forward side of firewall. Ensure that dissimilar metals tape (C138) is in place next to hanger and install nuts (14) and tighten snugly.

h. Rotate shaft (22) and check rotor (25) to ensure that rotor has adequate clearance with housing (28).

i. Torque bolts (17) **50 TO 70 INCH-POUNDS** and lockwire (C96) bolts to hanger.

j. Torque bolts (44) **20 TO 25 INCH-POUNDS**.

k. Torque bolts (38) **50 to 70 INCH-POUNDS** and lockwire bolts in place using lockwire (C96).

l. Install forward short shaft (1) and aft short shaft (31). Refer to paragraphs 6-134 and 6-150.

m. Install oil lines, flexible air duct, and other components removed in paragraph 6-139, step 6-139c.

n. Fill engine oil tank. Refer to paragraph 1-8.

o. On original style (hard-type) bearing hangers shown on figure 6-23, align bearing (12 and 34) as follows:

(1) Torque bolts (16 and 37) to **5 INCH-POUNDS**.

CAUTION

During accomplishment of following step do not allow bearing outer races to rotate excessively.

(2) Ground runup is required. During runup remove all torque on bolts (16 and 37), if necessary, to allow bearing outer races to move and align in hangers.

(3) After bearings (12 and 34) are aligned, torque bolts (16 and 37) **50 TO 70 INCH-POUNDS** and lockwire. Using acrylic lacquer (C92), paint slippage mark from driveshaft to inner race of bearing and from outer race of bearing to hanger. Torque nuts (14) **50 TO 70 INCH-POUNDS**.

(4) Apply corrosion preventive compound (C51) to outer races of bearings (12 and 34) and to adjacent area on bearing hanger. Do not allow corrosion preventive compound to contact bearing seals.

(5) Perform maintenance operational check. After MOC, check slippage marks on bearings (12 and 34). If either bearing outer race has moved in its hanger, replace the associated spacer (15 or 42) with a spacer **0.002** inch thinner and repeat steps (1) through (5).

p. On improved (spring-type) bearing hangers shown on figure 6-22, align bearings in hanger (4 and 6) as follows:

(1) Remove forward short shaft (1) if required. Refer to paragraph 6-132.

(2) Back off the bearing hanger clamp nuts, (1, figure 6-22) to end of clinch bolt. Do not remove nut.

NOTE

Construct a wedge from nonmetallic stock with thickness of 0.25 inches. Form edge by filing an end to insert into opening of hanger when performing bearing wobble inspection.

(3) Insert wedge in slot on the bearing hanger and open slightly taking care not to damage the hanger.

(4) Rotate shaft by turning the tail rotor blade and hub assembly.

(5) Visually inspect the bearing wobble.

(6) If no wobble exists, remove wedge and torque **50 TO 70 INCH-POUNDS.**

(7) To remove wobble, reposition bearing outer race in hanger.

(8) Remove steps (2) through (7) for both bearings.

(9) Install forward short shaft if removed in step (1) above.

q. Ground run helicopter for **15** minutes. During coastdown, check bearing wobble. This is indicated by noted vibrations of bearing hanger when felt by hand. Eliminate wobble by repeating above steps (2) through (7).

NOTE

An additional maintenance operational check will be required if corrective action was required in the above step q.

6-144. AFT SHORT SHAFT.

6-145. DESCRIPTION — AFT SHORT SHAFT. The aft short shaft, a section of the tail rotor driveshaft, is located between the oil cooler fan shaft and the long tail rotor driveshaft. Flexible laminated steel disc assemblies and splined adapters connect the shaft sections.

6-146. LUBRICATION — AFT SHORT SHAFT. Refer to Chapter 1, figure 1-5 for lubrication requirements.

6-147. INSPECTION — AFT SHORT SHAFT. Refer to paragraph 6-115.

6-148. REMOVAL — AFT SHORT SHAFT. Remove two opposed bolts (11, figure 6-18), washers (10 and 16) and nut (17) from adapters at each end of short shaft (6). Leave laminated disc assemblies (14) assembled on aft short shaft (6). Remove aft short shaft (6) from helicopter.

6-149. REPAIR — AFT SHORT SHAFT. Refer to paragraph 6-117.

6-150. INSTALLATION — AFT SHORT SHAFT.

CAUTION

Install beveled side of washers toward disc assembly. If beveled washers are installed with flat side of washer next to disc this will result in premature disc failure.

NOTE

Prior to installation lubricate shaft and adapter splines identified in figure 1-5.

a. Position aft short shaft (6) on helicopter. Install bolts (11) with washers (10 and 16) and nuts (17). Refer to figure 6-18 for beveled washers (10) installation.

NOTE

On each of the five disc assemblies torque the nuts in an alternate pattern. Tighten one nut 20 INCH-POUNDS, then alternate 180 degrees and tighten the opposite nut the same amount. Repeat this procedure on all nuts increasing the torque 15 TO 20 INCH-POUNDS increments until the final torque value is reached.

b. Torque nuts (17) **50 TO 70 INCH-POUNDS**.

6-151. LONG SHAFT.

6-152. DESCRIPTION — LONG SHAFT. The long shaft, a section of the tail rotor driveshaft, couples the aft short shaft to the tail rotor gearbox. Flexible laminated steel disc couplings, splined adapters, and bearing hangers support and connect the long driveshaft to the tail rotor gearbox. Refer to figure 6-20.

6-153. LUBRICATION — LONG SHAFT. Refer to Chapter 1, figure 1-5 for lubrication requirements.

6-154. INSPECTION — LONG SHAFT. Refer to paragraph 6-115 for inspection of long driveshaft.

6-155. REMOVAL — LONG SHAFT. Refer to figures 6-20 and 6-21.

Premaintenance Requirements for Removal of Long Driveshaft

Condition	Requirements
Model	OH-58A/C
Part No. or Serial No.	All
Special Tools	None
Test Equipment	None
Support Equipment	None
Minimum Personnel Required	Two
Consumable Materials	(C2) (C106)
Special Environmental Conditions	None

a. Remove two opposed bolts (2), washers (6 and 3), and nuts (7) from coupling at each end of shaft. Leave laminated discs assembled on splined adapter on tail rotor gearbox and on aft end of aft short tail rotor driveshaft (1).

b. Remove two hanger screws (23), washers (21), cotter pin (27), and nuts (20) attaching each of six bearing hangers (13) to support brackets (22) mounted along top center of tailboom. Remove tail rotor shaft (10) and bearing hangers (13) from tailboom.

c. Remove safety pin (9), washers (26), cotter pin (27), and adapter (5) from forward end of long driveshaft (10).

WARNING

Acetone is extremely flammable and toxic to eyes, skin, and respiratory tract. Wear protective gloves and goggles/face shield. Avoid repeated or prolonged contact. Use only in well-ventilated areas (or use approved respirator as determined by local safety/industrial hygiene personnel). Keep away from open flames, sparks, hot surfaces or other sources of ignition.

d. Clean shaft of all accumulated dirt or grease. Surgical lubricant (C106) applied to the shaft will serve as an aid in removal and installation of bearing assemblies. Remove lacquer with acetone (C2) as required for collar removal.

CAUTION

Do not remove bearing hanger (13) from bearing (11) while still on shaft.

e. Remove bearing (11), hanger (13), and collar (12), by sliding forward and off end of long driveshaft (10).

f. Remove bearing (11) from hanger (13) as follows:

(1) On original style (hard-type) hanger, remove bolt (15), washers (14 and 21), and shim (17). While holding hanger (13), twist bearing (11) one-quarter turn on its vertical axis and remove through slot.

(2) On improved (spring-type) hanger, remove nut (1, figure 6-22), spacers (8), and spring (3). While holding hanger (7), twist bearing one-quarter turn on its vertical axis and remove through slot.

g. Remove bearing collar (12, figure 6-20) from bearing (11).

6-156. REPAIR — LONG SHAFT. Refer to paragraph 6-117.

6-157. INSTALLATION — LONG SHAFT.

Premaintenance Requirements for Installation of Long Driveshaft

Condition	Requirements
Model	OH-58A/C
Part No. or Serial No.	All
Special Tools	None
Test Equipment	Torque wrench
Support Equipment	None
Minimum Personnel Required	Two
Consumable Materials	(C2) (C51) (C106) (C131) Shims (Refer to table 6-3)
Special Environmental Conditions	None

NOTE

Either the original style (hard-type) or improved (spring-type) bearing hangers may be installed and are interchangeable.

a. Install bearings (11, figure 6-20) in original style (hard type) hanger (13) as follows:

NOTE

The original style (hard-type) bearing hangers can be installed with the lock-up hardware either to the left or right side of the driveshaft. For safety, the hardware should be installed to the right in the tail rotor area.

If bearings P/N 206-040-339-7 or -9 are being installed, corrosion preventive compound is not required.

Bearing assemblies P/N 206-040-339-3 and -5 are no longer authorized for new installations. Bearing assemblies P/N 206-040-339-7 and -9 may be used interchangeably.

(1) Install assembled bearings and hangers on their respective collars. (Refer to figure 6-24.)

(2) Position each hanger to correspond to hanger supports (22, figure 6-20).

(3) Install bolt (15), washers (14 and 21), and shim (17) in hanger (13), torque bolt **50 TO 70 INCH-POUNDS**. Bearing should not pivot axially or rotate radially under hand pressure.

NOTE

Shims (17) are available in 0.002 inch thickness difference as listed in table 6-3. Use proper thickness shim to obtain correct fit.

Table 6-3. Shim Thickness

206-040-347-1	0.060 inch
206-040-347-3	0.058 inch
206-040-347-5	0.056 inch
206-040-347-7	0.054 inch
206-040-347-9	0.062 inch
Use proper thickness shim to obtain correct fit.	

NOTE: All dimensions are in inches.

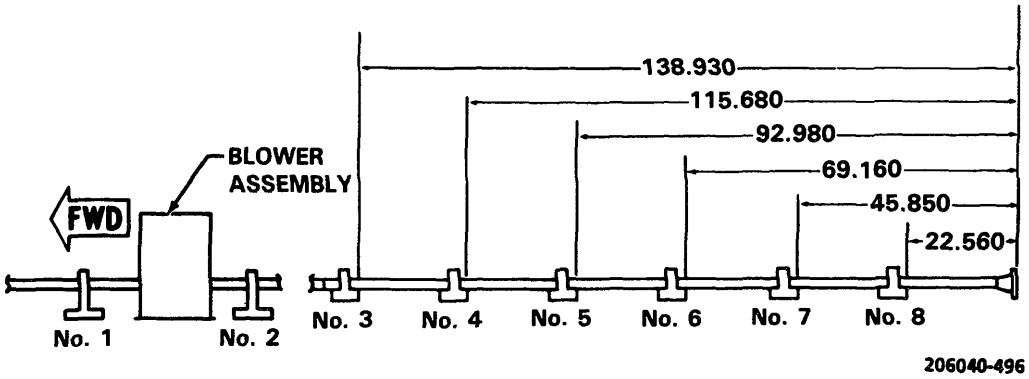

Figure 6-24. Typical Bearing Locations and Numbering

(4) Loosen bolt and install **0.002** inch shim with shim (17); torque bolt to **50 TO 70 INCH-POUNDS**. Using hand pressure, bearing should pivot axially, but not radially.

(5) Loosen bolt and remove extra shim. Refer to paragraph 6-127 for initial helicopter runup torque and final torque.

NOTE

As an alternate check to prevent excessively tight or loose bearing fit, perform the following:

(a) Torque bolt (15) **50 TO 70 INCH-POUNDS**. At **65° to 85°F**, the torque required to pivot the bearing in any direction from dead center in the hanger must be within **115 TO 155 INCH-POUNDS**. If the torque is high or low change shim (17) to obtain an acceptable fit.

(b) An acceptable way to accomplish this alternate check is to insert a 10 inch socket wrench extension into the bearing, attach a spring scale to the end of the extension and pull perpendicular to the extension with the spring scale. Bearing should pivot between **11.5 TO 15.5** pounds.

NOTE

If bearings P/N 206-040-339-7 or -9 are being installed, corrosion preventive compound is not required.

Bearing assemblies P/N 206-040-339-3 and -5 are no longer authorized for new installations. Bearing assemblies P/N 206-040-339-7 and -9 may be used interchangeably.

(6) Apply a thin coating of corrosion preventive compound (C51) to inner diameter of hangers and outer diameter of bearings.

(7) Apply a thin coating of corrosion preventive compound (C51) to edge of bearing and hanger. Do not allow compound to contact bearing grease seal.

NOTE

To complete driveshaft installation, use procedures outlined in steps b.(7) through b.(16).

b. Install bearings in improved (spring-type) hangers (7, figure 6-22) as follows:

WARNING

Acetone is extremely flammable and toxic to eyes, skin, and respiratory tract. Wear protective gloves and goggles/face shield. Avoid repeated or prolonged contact. Use only in well-ventilated areas (or use approved respirator as determined by local safety/industrial hygiene personnel). Keep away from open flames, sparks, hot surfaces or other sources of ignition.

NOTE

Bearing to hanger fit check is not required on improved (spring-type) bearing hanger.

Replace driveshaft if painted with epoxy paint. Epoxy paint cannot be removed and will prevent proper installation of the new collars.

The procedure for installation of new collars (P/N 206-040-319-7 and -9) requires that a single collar will first be installed on the shaft; then its associated bearing and hanger.

Collars will not be reused. Replace collar whenever a bearing is removed for any reason.

Preformed packings (16, figure 6-21) will be installed at bearing location No. 7.

(1) Clean shaft thoroughly with acetone (C2).

WARNING

Surgical lubricant (C106) is the only authorized lubricant for installation of the new collars.

(2) Apply a thin coat of surgical lubricant (C106) to shaft and inner diameter of collar (12) and install collar. Refer to figure 6-24 for locations.

(3) Install bearing in hanger.

CAUTION

Inspect spacer (8, figure 6-22) to ensure that it is the correct length.

(4) Install nut (1), spacer (8), and spring (3) on bolt installed in hanger (7), and torque **50 TO 70 INCH-POUNDS**.

(5) Install assembled bearing and hanger on its respective collar. (Refer to figure 6-24.)

NOTE

Bearing shall be positioned on the straight part of the new improved collar, within 0.250 inch of center.

(6) After all collars, bearings, and hangers have been installed in the above manner, position each hanger to correspond with bearing support (22, figure 6-20).

WARNING

Acetone is extremely flammable and toxic to eyes, skin, and respiratory tract. Wear protective gloves and goggles/face shield. Avoid repeated or prolonged contact. Use only in well-ventilated areas (or use approved respirator as determined by local safety/industrial hygiene personnel). Keep away from open flames, sparks, hot surfaces or other sources of ignition.

(7) After collars, bearings, and hanger assemblies have been properly positioned, clean affected areas adjacent to each collar using acetone (C2).

(8) Using a spatula, apply sealing compound (C131) around the ends of each collar to create a fillet approximately **0.030** inch by **0.250** inch on the shaft at the I.D. edge of the collar.

CAUTION

Ensure that safety pin, washer, and cotter pin are properly installed.

(9) Insert pin (9, figure 6-20 or 6-21) through shaft (10) and adapter (8). Secure with washer (26) and cotter pin (27).

NOTE

Prior to installation, lubricate shaft and adapter splines identified in figure 1-5 with grease (C77).

(10) Install splined adapter (5, figure 6-20 or 6-21) on forward end of shaft. Install splined adapter (4, figure 6-28) on input pinion shaft (5).

CAUTION

Install beveled side of washers toward disc assembly. If beveled washers are installed with flat side of washer next to disc, premature disc failure will result.

(11) Position long tail rotor driveshaft assembly along top of tailboom. Connect disc assemblies at ends of tail rotor driveshaft. Refer to paragraph 6-126 for installation of disc assembly.

NOTE

Install packings (16, figure 6-20 or 6-21) as spacers on the bushings of the seventh hanger.

Install additional washers as required if screw grip is too long for cotter pin installation.

(12) Insert two screws (23, figure 6-20 or 6-21) through support (22), bushing (19), and hanger (13). Ensure bushings (19) are in place.

(13) Install washer (21) and nut (20) on each screw (23) and torque **35 TO 45 INCH-POUNDS**. Install cotter pin (27).

NOTE

In operation, the driveshaft is free to float within the limits of the packings on the seventh hanger.

(14) Reposition shaft to give **0.110 to 0.170** inch clearance between aft end of adapter (4, figure 6-28) and gearbox (8). See detail in figure 6-28.

(15) Center bearing hangers within **0.060** inch of midpoint of bearing supports (22, figure 6-21) while maintaining the **0.110 to 0.170** inch clearance between adapter (4, figure 6-28) and gearbox (8).

(16) Perform adjustment and alignment of tail rotor driveshaft. Refer to paragraph 6-127.

6-158. TAIL ROTOR DRIVESHAFT. (After compliance with MWO 55-1520-228-50-25.)

6-159. DESCRIPTION — TAIL ROTOR DRIVESHAFTS. The driveshafts consist of separate segments that are connected by flexible, laminated steel disc assemblies and supported by bearing hangers. Five of the driveshaft segments installed between the forward and aft tailboom bearing hangers are identical and interchangeable. The shaft forward of the blower is constructed of steel and the remaining shafts are constructed of aluminum alloy. (Figures 6-25 and 6-27.)

Premaintenance Requirements for Tail Rotor Driveshaft

Condition	Requirements
Model	OH-58A/C
Part No. or Serial No.	All
Special Tools	None
Test Equipment	None
Support Equipment	None
Minimum Personnel Required	Two
Consumable Materials	(C45) (C77) (C22) (C50) (C38) (C126) (C62) (C127) (C143) (C147) (C155) (C84) (C154) (C90)
Special Environmental Conditions	None

6-160. INSPECTION AND REPAIR — TAIL ROTOR DRIVESHAFT.

a. Inspect surfaces of driveshafts (1 through 6, figure 6-25) for scratches, corrosion, or other damage. Surface of driveshafts to be smooth and unmarred. Replace driveshafts which exceed the following limits:

(1) Scratches up to **0.002** inch deep around entire circumference shall be blended out using 400 to 600 grit sandpaper (C126 or C127) or abrasive cloth (C45). Maximum stock removal is **0.003** inch.

(2) Scratches up to **0.005** inch deep, axial or circumferential, but not longer than **25** percent of the

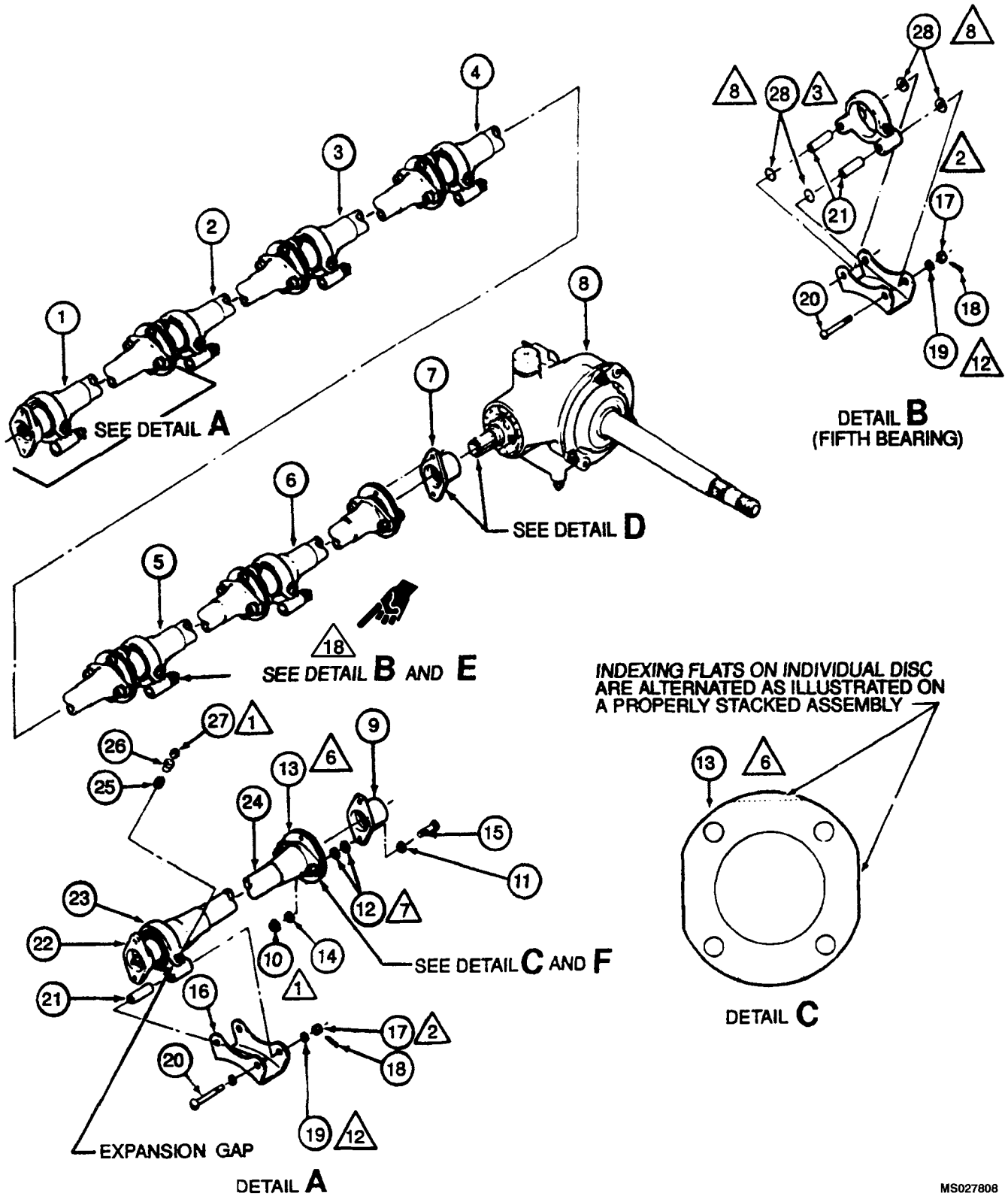

Figure 6-25. Segmented Tail Rotor Driveshaft
(After Incorporation of MWO 55-1520-228-50-25) (Sheet 1 of 3)

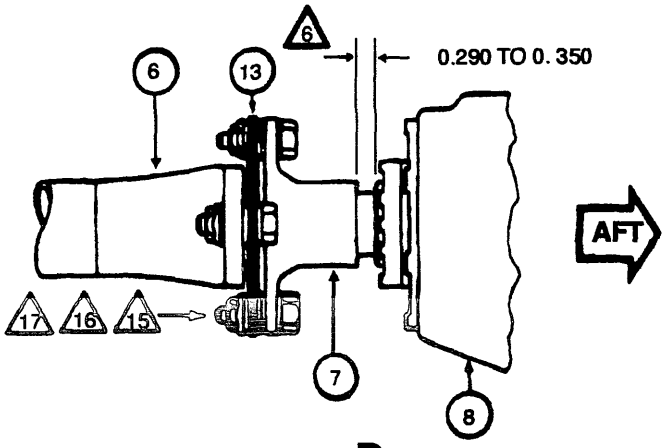

DETAIL D

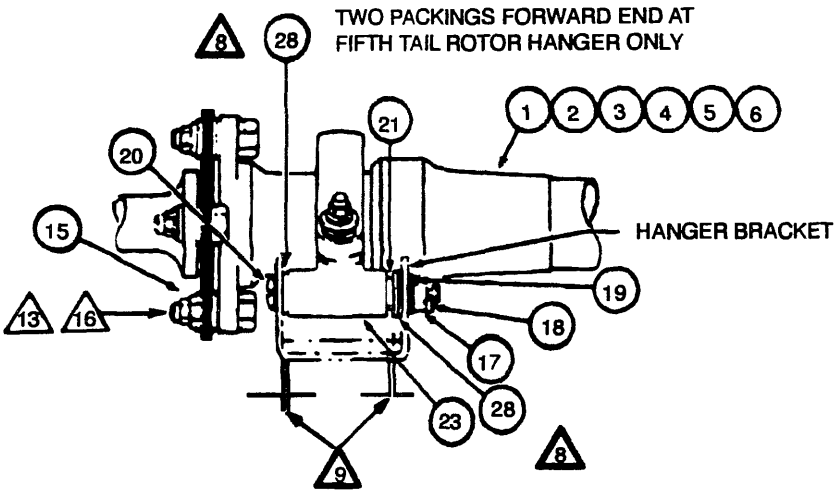

DETAIL E

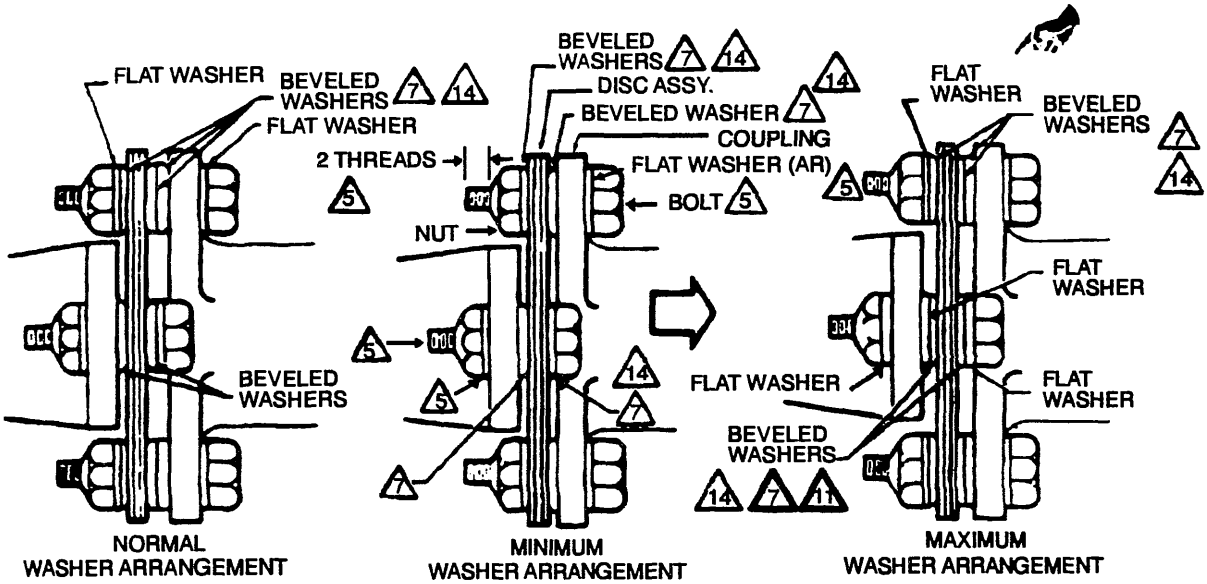

DETAIL F

Figure 6-25. Segmented Tail Rotor Driveshaft
(After Incorporation of MWO 55-1520-228-50-25) (Sheet 2 of 3)

1. Driveshaft
2. Driveshaft
3. Driveshaft
4. Driveshaft
5. Driveshaft
6. Driveshaft
7. Slip Adapter
8. Tail Rotor Gearbox
9. Splined Adapter
10. Nut
11. Steel Washer
12. Beveled Washer
13. Disc Assembly
14. Beveled Washer
15. Bolt
16. Bracket
17. Nut
18. Cotter Pin
19. Aluminum Washer
20. Screw
21. Bushing
22. Splined Adapter
23. Hanger
24. Driveshaft
25. Spring
26. Spacer
27. Nut
28. Packing

NOTES

1. Torque nuts 50 to 70 Inch-pounds.

2. Torque nuts 30 to 40 Inch-pounds.

3. Four packings, two each side, forward and aft end at fifth hanger only

4. All dimensions are in inches.

5. Bolt lengths shall be changed as require to prevent nuts from bottoming on bolt threads. A minimum of two threads shall protrude beyond the nut. Bolt length and number of washers shall be equal at any pair of bolts located diametrically oppo-site each other.

6. Disc assembly stack-up must not be disturbed. Disc indexing flats must be alternated in disc assembly. No gaps exceeding 0.005 inch are permitted between the discs (see detail C). Inspect disk for damage. No repair is authorized on disk.

7. Install washers with rounded edge side adjacent to disc assembly. When two washers are specified in contact with each other, the flat side of washers shall be installed back to back.

8. Any equivalent size packing may be substituted.

9. After installation, the hanger assemblies are to be centered in the brackets within 0.030 of the mid-position of the available gap.

10. One 206-040-329-3 washer may be removed at bearing hangers to obtain hanger to bracket centering per note 9 and 0.290-0.350 dimension at the tail rotor gearbox

11. One 206-040-329-3 washer may be added at bearing hangers to obtain hanger to bracket center per note 9 and 0.290-350 dimension at tail rotor gearbox.

12. Additional aluminum washers may be added if screw grip is too long for cotter pin installation.

13. Minimum clearance between bolt heads or threaded ends and the hanger brackets shall be .06 (1/16) inches. Check with drive shaft at fwd and aft limits of motion. Clearance is required between all rotating parts and structures.

14. Inspect the beveled washer, P/N 206-040-329-3, prior to installation to assure it is in fact beveled or rounded on one side.

15. Bolts may be installed in either direction. The bolts are illustrated with nuts facing away from hangers for mot convenient torque application.

16. Bolt length shall be selected so that there are no threads bearing in the shaft , shaft adapter, or disc assembly.

17. Diametrically opposed bolt installation shall be identical bolt length, bolt direction, and washer arrangement.

Figure 6-25. Segmented Tail Rotor Driveshaft (After Incorporation of MWO 55-1520-228-50-25) (Sheet 3 of 3)

circumference, shall be blended out using 400 to 600 grit sandpaper (C126 or C127) or abrasive cloth (C45). Maximum material removal is **0.006** inch.

(3) Nicks shall be removed from corners using 400 to 600 grit sandpaper (C126 or C127) or abrasive cloth (C45) using a chamfer of **0.030** inch by **40 to 50** degrees, whose total length, when blended to existing surface shall not exceed **0.050** inch. Maximum of two repairs are permitted in the same quadrant of the driveshaft.

(4) Corrosion pitting shall be blended out using 400 to 600 grit sandpaper (C126 or C127) or abrasive cloth (C45). Maximum stock removal is **0.006** inch.

(5) If there is any cracking in the adhesive used in sealing ends of the driveshaft, completely remove adhesive and cork from affected end. Coat a cork (Fed. Spec. LLL-S-731, Type I, Grade B, Class 1, Size 14 (or a size that provides a tight fit) with adhesive (Fed. Std. MMM-A-132, Type 2) and insert cork into shaft to the point where the outside of the cork is 0.12 inch deep into the shaft. Fill void between end of cork and end of shaft with adhesive (Fed. Std. MMM-A-132, Type 2). The adhesive fill must provide a smooth surface that is from 0.030 inch deep to flush with end of shaft.

b. Inspect surfaces of splined adapters (9) for scratches, corrosion, or other damage. Surface of adapters to be smooth and unmarred. Replace adapters which exceed the following limits:

(1) Scratches up to **0.005** inch deep around the entire circumference shall be blended out using 400 to 600 grit sandpaper (C126 or C127) or abrasive cloth (C45). Maximum material removal is **0.007** inch.

(2) Scratches up to **0.010** inch deep, axial or circumferential, not longer than **25** percent of circumference shall be blended out using 400 to 600 grit sandpaper (C126 or C127) or abrasive cloth (C45). Maximum material removal is **0.012** inch.

(3) Nicks shall be removed from corners using 400 to 600 grit sandpaper (C126 or C127) or abrasive cloth (C45) using a chamfer of **0.030** inch by **40 to 50** degrees, whose total length, when blended to the existing surface is **0.500** inch. Maximum of two repairs are permitted in same quadrant of the adapter.

(4) Corrosion pitting shall be polished out using 400 to 600 grit sandpaper (C126 or C127) or abrasive cloth (C45). Maximum material removal is **0.010** inch.

c. Inspect surfaces of hangers (23) for scratches, corrosion, or other damage. Replace hangers which exceed the following limits:

NOTE

It is preferred that all hanger bearing clamp hardware will be on the left after compliance with MWO 55-1520-228-50-25.

(1) Scratches, nicks, and corrosion on exterior surfaces shall be blended out using 400 to 600 grit sandpaper (C126 or C127) or abrasive cloth (C45).

(2) Maximum material removal is **0.010** inch.

d. Any damage or repairs to an anodized finished surface requires repair with chemical conversion coating (C38).

e. Touch up clear protective coating on tail rotor driveshaft segments (1, 2, 3, 4, 5, and 6) as required (paragraph 6-172).

f. Inspect sealed tail rotor hanger bearings for smoothness, evidence of overheating and turning inside the hanger. Do not wipe bearing seal lip. If bearing is running hot, inspect at frequent intervals until 20 hours of operation have elapsed. If bearing temperature has not stabilized after this time, replace bearings.

WARNING

If there is any question of bearing serviceability, replace bearing.

CAUTION

After a disc assembly has been run on a helicopter, discs should not be changed from original pack except as noted in step g. The grain of each disc runs parallel to the indexing flat edges. When assembling disc pack assembly, it is necessary to alternate indexing flats to obtain alternate grain direction. See detail C.

NOTE

The inspection for rough bearings should be accomplished after a flight while the bearings are still warm. New bearings will normally run warm for the first 20 hours of operation. If a rough bearing is found, but there is no indication of overheating, fly helicopter for another 5 to 20 hours and check bearing again for roughness. Also check proper alignment of the bearing to the shaft by rotating the shaft and checking for wobble of the hanger at the attaching bracket, with screws removed.

It is not necessary to disconnect segmented driveshaft. Turn main rotor system to check for rough, misaligned, or binding bearings.

g. Inspect disc assemblies (13) for distortion resulting in gaps between the disc. Do not mix old and new discs. Do not change sequence or reverse indexing. No gaps exceeding **0.005** inch are permitted between the discs. If any gaps are found loosen bolts, rotate discs back and forth, and then uniformly tighten bolts to required torque. Recheck gaps. If gaps still exist replace disc assembly (13). When discs are in an assembly, the thickness is **0.115 to 0.127** inch. The disc assemblies vary between 9 to 12 plates. Thickness of each plate varies between **0.010 to 0.014**.

WARNING

Degreasing Solvent is combustible and toxic to eyes, skin, and respiratory tract. Wear protective gloves and goggles/face shield. Avoid repeated or prolonged contact. Use only in well-ventilated areas (or use approved respirator as determined by local safety/industrial hygiene personnel). Keep away from open flames or other sources of ignition.

6-161. CLEANING — TAIL ROTOR DRIVESHAFTS. Clean segments of the tail rotor driveshafts with degreasing solvent (C62) and dry with filtered compressed air. Do not allow solvent to contact sealed bearing and do not wipe grease from bearing seals. Wiping grease from seal may push foreign material into bearing.

6-162. REMOVAL — TAIL ROTOR DRIVESHAFT SEGMENT — TYPICAL.

a. Open or remove tail rotor driveshaft covers. (Refer to Chapter 2.)

CAUTION

After a disc assembly has been run on a helicopter, discs should not be changed from original pack except as noted in paragraph 6-160, step g.

NOTE

Remove tail rotor driveshaft segments (1, 2, 3, 4, 5, and/or 6, figure 6-25) individually, or as required to accomplish maintenance requirement.

b. Remove tail rotor driveshaft segment (typical, detail A) by removal of two diametrically opposed bolts (15), beveled washers (12 and 14), thin steel washers (11), and nuts (10) from aft disc assembly (13). This will leave the disc assembly (13) attached to aft end of driveshaft.

c. Remove two diametrically opposed bolts (15), beveled washers (12 and 14), thin steel washers (11), and nuts (10) from forward splined adapter (22).

d. Remove cotter pins (18), nuts (17), aluminum washers (19), screws (20), from hanger (23). Lift complete tail rotor driveshaft segment (1) from hanger bracket on top of tailboom.

e. When removing the fifth hanger (23), remove packings (28) on forward and aft end of hanger. (See detail B.)

f. Remove slip adapter (7) from input shaft on tail rotor gearbox (8).

g. If required, remove disc assembly (13) from driveshaft segment (24) by removing two bolts (15), beveled washers (12 and 14), washers (11), and nuts (10).

6-163. DISASSEMBLE DRIVESHAFT SEGMENT (AFTER MWO 55-1520-228-50-25).

a. Remove driveshaft segment with hanger attached from tailboom. Refer to paragraph 6-162.

b. Remove adapter (6, figure 6-26) from driveshaft (2) as follows:

(1) Remove nut (4), washer (5), and plate (3).

(2) Remove adapter (6).

c. Remove hanger (7) from driveshaft. Refer to paragraph 6-155.

d. Press bearing (1) off driveshaft (2). Discard bearing.

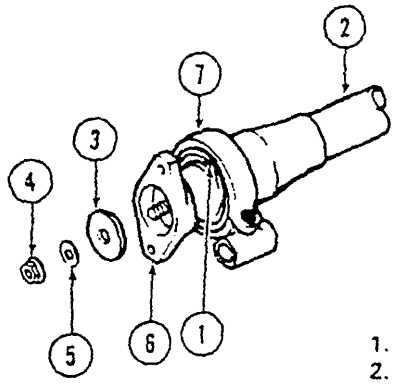

1. Bearing
2. Driveshaft
3. Plate
4. Nut
5. Washer
6. Adapter
7. Hanger

206040-498

Figure 6-26. Tail Rotor Driveshaft Segment Disassembly (After Incorporation of MWO 55-1520-228-50-25)

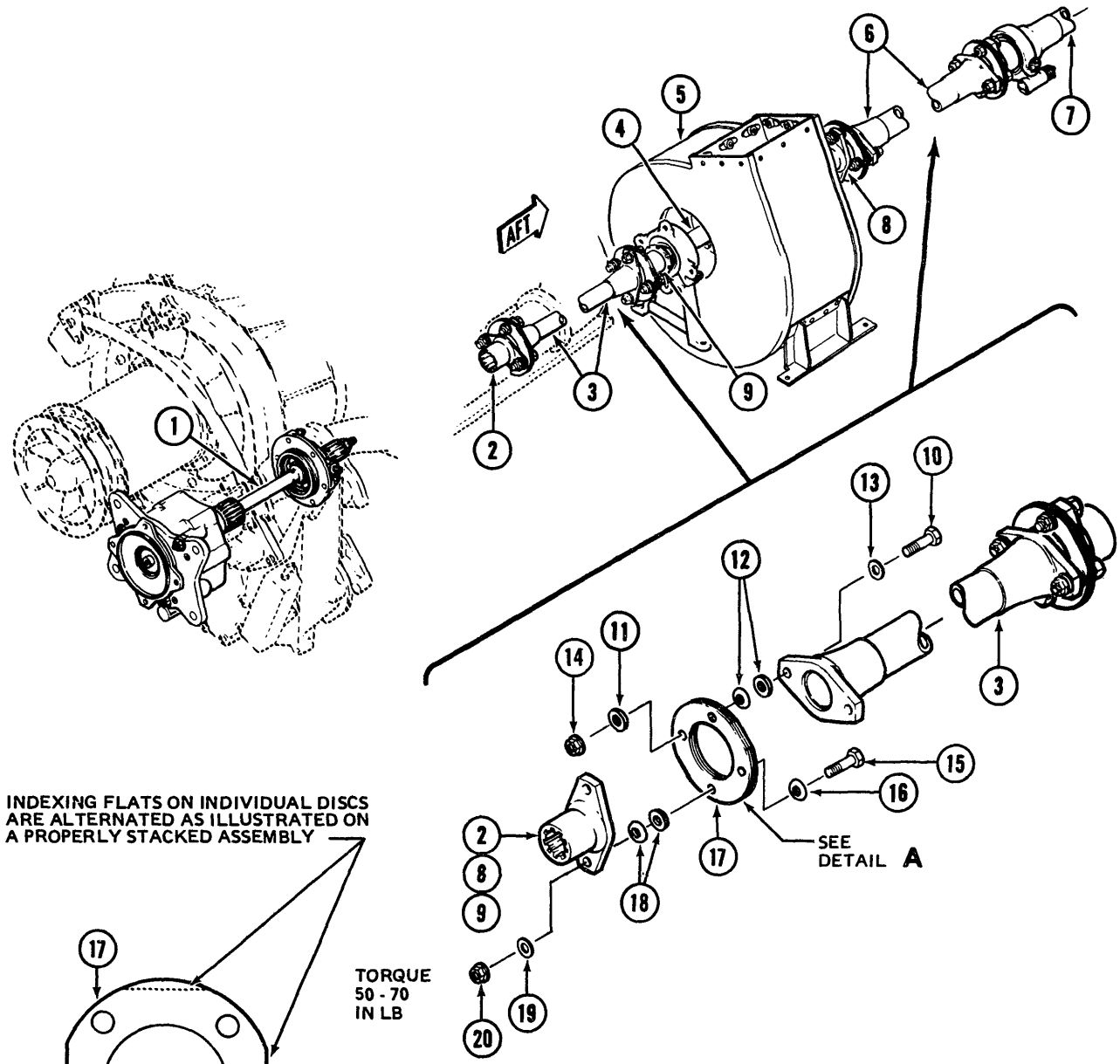

1. Freewheeling Assembly
2. Splined Adapter
3. Forward Short Shaft
4. Blower Shaft
5. Blower Assembly
6. Aft Short Shaft
7. Tail Rotor Driveshaft Segment
8. Splined Adapter
9. Splined Adapter
10. Bolt
11. Beveled Washer
12. Beveled Washers
13. Thin Steel Washer
14. Nut
15. Bolt
16. Beveled Washer
17. Disc Assembly
18. Beveled Washers
19. Thin Steel Washer
20. Nut

206040-499

Figure 6-27. Forward and Aft Short Tail Rotor Driveshaft

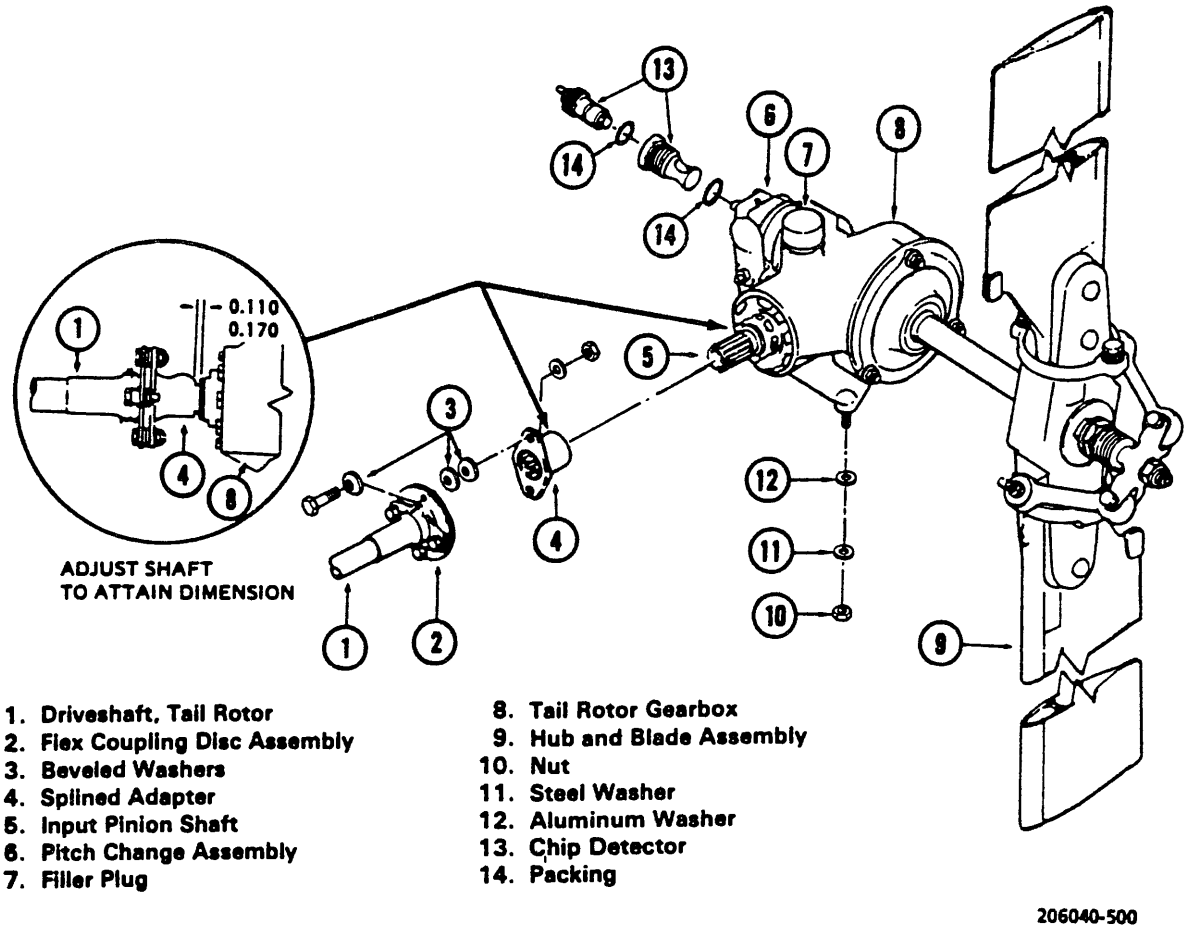

Figure 6-28. Tail Rotor Gearbox Installation

6-164. ASSEMBLE DRIVESHAFT SEGMENT (AFTER MWO 55-1520-228-50-25).

a. Press bearing (1) against shoulder on driveshaft (2).

b. Install hanger (7) onto bearing (1). Refer to paragraph 6-157.b.

c. Install adapter (6) as follows:

NOTE

Prior to installation, lubricate driveshaft (2, figure 6-26) and adapter (6) splines with grease (C77). Driveshaft adapter flanges (2, figure 6-26) and splined adapter flanges (6) shall be installed 90 degrees opposite each other.

(1) Insert adapter (6) onto splined end of driveshaft (2).

(2) Install plate (3), washer (5), and nut (4).

(3) Torque nut (4) **30 TO 50 INCH-POUNDS**.

6-165. INSTALLATION — TAIL ROTOR DRIVESHAFT SEGMENT — TYPICAL.

NOTE

Driveshaft adapter flanges (1,2,3,4,5 and 6, Figure 6-25) shall be installed 90 degrees opposite the slip adapter (7) and splined adapter flanges (9 and 22) across the flex coupling as shown in figure 6–25, Detail D

a. Apply a light coating of grease (C77) to splines on input pinion shaft of tail rotor gearbox (8, figure 6-25) and slip adapter (7). (See detail D.) Position slip adapter (7) onto input pinion shaft of tail rotor gearbox (8).

CAUTION

After a disc assembly has been run on a helicopter, discs should not be changed from original pack except as noted in paragraph 6-160, step g.

The grain of each disc runs parallel to the indexing flat edges. When assembling disc pack assembly, it is necessary it alternate grain direction. See detail C.

b. Install disc assemblies (13) to aft splined adapters (9) on each tail rotor driveshaft as follows:

CAUTION

Beveled washers must be installed with rounded edge side contacting disc assemblies and quantities must be equal at 180 degree positions.

Only the grip portion (unthreaded) of bolts are permitted to contact disc assemblies and bolt lengths must be equal at 180 degree positions.

(1) Install two diametrically opposed bolts (15), beveled washers (12 and 14), thin steel washers (11), and nuts (10). Install beveled washers with rounded edge side in contact with disc assembly (13). Torque nuts uniformly in 20 inch-pound increments **50 TO 70 INCH-POUNDS**.

(2) Inspect all disc assemblies (13) for distortion resulting in gaps between the individual discs. No gaps exceeding 0.005 inch are permitted between discs. If any gaps are found, loosen bolts, rotate disc back and forth, and tighten bolts. Torque nuts uniformly in 20 inch-pound increment to **50 TO 70 INCH-POUNDS**. If gaps still exist, replace assembly (13).

c. Install two bushings (21) into hanger (23) and insert tail rotor driveshaft segment (detail A) in hanger bracket (16) on top of tailboom. Use suitable support to hold aft section of tail rotor driveshaft segment at approximate alignment.

NOTE

d. At fifth hanger (23), install four packings (28), two each side, on forward and aft end of bushing (21).

e. Install two screws (20) with heads forward, through hanger bracket and hanger (23). Install aluminum washers (19) and nuts (17). Torque nuts (17) **30 TO 40 INCH-POUNDS** and secure with cotter pins (18).

CAUTION

Beveled washers must be installed with rounded edge side contacting disc assemblies and quantities must be equal to 180 degree positions.

Only the grip portion (unthreaded) of bolts are permitted to contact disc assemblies and bolts lengths must be equal to 180 degree positions.

NOTE

Additional aluminum washers (19) may be used to ensure correct nut and cotter pin engagements. See detail E.

f. Connect tail rotor driveshafts (1,2, 3, 4, 5, and 6) together, and to aft short shaft and slip adapter (7) as follows:

(1) At each hanger location install two diametrically opposed bolts (15), beveled washers (12a and 14), thin steel washers (11), and nuts (10). Install beveled washers with rounded edge side in contact with disc assembly (13). Torque nuts uniformly in 20 inch-pound increments to **50 TO 70 INCH-POUNDS**.

(2) Inspect all disc assemblies (3) for distortion resulting in gaps between the individual discs. No gaps exceeding **0.005** inch are permitted between discs. If gaps are found, loosen bolts, rotate disc back and forth, and uniformly tighten bolts. Torque nuts uniformly in **20 INCH-POUND** increments to **50 TO 70 INCH-POUNDS**. Recheck gaps. If gaps still exist, replace assembly (13).

g. Check tail rotor driveshaft segments (1, 2, 3, 4, 5, and 6) at hangers (23) to insure they are centered in the brackets within **0.030** inch of the mid-position of the available gap. (See detail E.) If required clearance is not available, add or remove washers from adjoining disc assembly (13) as follows:

(1) One additional beveled washer (12) and/or flat washer (11) may be added with beveled washer at each disc assembly (13) to obtain clearance. Position beveled washers with flat sides back-to-back, install, and torque nuts (10) uniformly in 20 inch-pound increments to **50 TO 70 INCH-POUNDS**. Recheck hanger for required clearances and ensure the preceding caution statements have been observed.

(2) One beveled washer (12) and/or flat washer (11) may be removed at each disc assembly (13) to obtain clearance. Position beveled washers with rounded edge side contacting disc assembly and torque nuts (10) **50 TO 70 INCH-POUNDS**. Recheck hanger for required clearance and ensure the preceding cautions have been observed.

h. Check slip adapter (7) on input pinion shaft of tail rotor gearbox (8) for a clearance dimension of **0.290 to 0.350** inch. (See detail D.) Dimension is measured from aft end of slip adapter to shoulder on input pinion shaft of tail rotor gearbox. If required clearance is not available, add or remove beveled washer from adjoining disc assembly (13) by the same procedure as described in step g. (1) and g. (2).

CAUTION

Ensure that only spacers (26) measuring 0.545 to 0.550 inch in length from flanged end are used in the six bearing hangers (23). Refer to figure 6-25.

i. Prepare helicopter for ground runup and accomplish hanger bearing centering as follows:

WARNING

Insure tail rotor driveshaft covers are closed during ground run operations.

(1) Loosen hanger clamping nuts (27, figure 6-25) until all preload is removed from springs (25) and springs can be turned by hand, then using nonsharp tool in split line of hanger, pry open slightly and move bearing slightly by hand to ensure freedom. Remove tool from hanger.

WARNING

Do not grasp tail rotor driveshafts during ground run or rotor coast down.

CAUTION

Do not exceed one minute ground run or bearings may spin excessively in hangers.

(2) Ground run helicopter at **60 to 62** percent rotor rpm for **45** seconds to **1** minute. Shut down and torque nuts (27) **50 TO 70 INCH-POUNDS**. Wipe off any grease from outside of bearings.

(3) Ground run helicopter for **15** minutes. Shutdown and check, hanger bearings in tail rotor driveshaft segments (1, 2, 3, 4, 5, and 6) for signs of overheating, roughness and turning inside the hanger. If bearings appear rough or are running hot, inspect at frequent intervals until **20** hours of operation have elapsed. If bearing operating temperature has not stabilized after this time, replace bearing.

j. Apply coating to tail rotor driveshaft segments. (Refer to paragraph 6-172.)

k. Apply a coating of corrosion preventive compound (C50) to the following surfaces:

(1) Seam between outer race of hanger bearing and exposed inside diameter surface of hangers (23).

(2) Exposed shank of clinch bolt, spring (25), spacer (26), and nut (27) on each hanger (23).

6-166. FORWARD AND AFT SHORT SHAFTS.

6-167. DESCRIPTION — FORWARD AND AFT SHORT SHAFTS. The forward short shaft and aft short shaft are located on either side of the oil cooler blower assembly. The forward short shaft is constructed of steel and is connected to the aft end of the freewheeling assembly and forward end of the fan shaft by splined adapters. The aft short shaft is constructed of aluminum alloy and is connected to the aft end of the fan shaft and the first tail rotor driveshaft by a splined adapter.

6-168. INSPECTION AND REPAIR — FORWARD AND AFT SHORT SHAFTS.

Premaintenance Requirements for Forward and Aft Short Shafts

Condition	Requirements
Model	OH-58A/C
Part No. or Serial No.	All
Special Tools	None
Test Equipment	Magnetic Particle Inspection Unit Fluorescent Penetrant Inspection Unit
Support Equipment	None
Minimum Personnel Required	One
Consumable Materials	None
Special Environmental Conditions	None
References	TM 1-1520-254-23

a. Inspect forward and aft short shafts (3 and 6, figure 6-27) for scratches and damage. Surface of shafts (steel or aluminum) to be smooth and unmarred. Replace shafts which exceed the following limits:

(1) Scratches up to **0.002** inch deep around entire circumference may be blended out using 400 to 600 grit sandpaper (C126 or C127) or abrasive cloth (C45) or India stone (C84). Maximum stock removal not to exceed **0.003** inch.

(2) Scratches up to **0.005** inch deep, axial or circumferential, but not longer than **25** percent of circumference may be blended out using 400 to 600 grit sandpaper (C126 or C127) or abrasive cloth (C45) or India stone (C84). Maximum material removal not to exceed **0.006** inch.

(3) Corrosion pitting must be polished out using 400 to 600 grit sandpaper (C126 or C127) or abrasive cloth (C45). Maximum depth of material removal after cleanup shall not exceed **0.006** inch.

(4) Any damage or repair to anodized finished surfaces requires repair with chemical conversion coating (C38).

(5) Touch up coating. (Refer to paragraph 6-172.)

b. Inspect splined adapters (2, 8, and 9) for chips, cracks, and wear. Replace splined adapters which have damaged splines, chips, or cracks. If a crack in the spline adapters is suspected, refer to TM 1-1520-254-23, Technical Manual Aviation Unit Maintenance (AVUM) and Aviation Intermediate Maintenance (AVIM) Manual Nondestructive Inspection Procedures for OH-58 Helicopter Series.

c. Inspect the coupling disc assemblies (17) for cracks, wear, or damage. Refer to paragraph 6-124. Gaps of more than **0.005** inch are not acceptable. If gaps are found, loosen bolts, rotate discs back and forth, and tighten bolts. Torque nuts uniformly in 20 inch-pound increments to **50 TO 70 INCH-POUNDS**. Recheck gaps. If gaps still exist, replace disc assembly (17). No cracks allowed. If a crack in the disc assembly is suspected, refer to TM 1-1520-254-23, Technical Manual Aviation Unit Maintenance (AVUM) and Aviation Intermediate Maintenance (AVIM) Manual Nondestructive Inspection Procedures for OH-58 Helicopter Series.

d. Inspect coupling discs for corrosion. Surface corrosion may be removed with abrasive pad (C154) or steel wool (C155). Corrosion on single disc sections that cannot be removed by this method must be replaced with serviceable disc sections.

CAUTION

The grain of each disc runs parallel to the indexing flat edges. When assembling disc pack assembly, it is necessary to alternate indexing flats to obtain alternate grain direction. Discs should not be changed from original pack except as noted in paragraph 6-160, step g.

e. For inspection and repair of blower shaft (4), blower assembly (5), and the bearing hangers refer to paragraph 6-135.

WARNING

Degreasing Solvent is combustible and toxic to eyes, skin, and respiratory tract. Wear protective gloves and goggles/face shield. Avoid repeated or prolonged contact. Use only in well-ventilated areas (or use approved respirator as determined by local safety/industrial hygiene personnel). Keep away from open flames or other sources of ignition.

6-169. CLEANING — FORWARD AND AFT SHORT SHAFTS. Clean forward and aft short shafts (3 and 6, figure 6-27) with degreasing solvent (C62) and dry with filtered compressed air. Do not allow solvent to enter hanger bearings.

6-170. REMOVAL — FORWARD AND AFT SHORT SHAFTS.

CAUTION

After a disc assembly has been run on a helicopter, discs should not be changed from original pack except as noted in paragraph 6-160, step g.

a. Remove forward short shaft (3, figure 6-27) or aft short shaft (6) by removing two diametrically opposed bolts (15), beveled washers (16 and 18), washers (19), and nuts (20).

b. Recommend disc assembly (17) be left installed on shafts and removed hardware be loosely reinstalled in disc assembly (17) for reinstallation and to maintain disc stackup, if disc must be removed.

6-171. INSTALLATION — FORWARD AND AFT SHORT SHAFTS.

a. Apply a thin film of grease (C77) to splines on ends of blower shaft (4, figure 6-27) and to internal splines or splined adapters (2, 8, and 9).

b. Position splined adapters (2) on aft end of freewheeling assembly (1) and splined adapters (8 and 9) on ends of blower shaft (4).

CAUTION

After a disc assembly has been run on a helicopter, discs should not be changed from original pack except as noted in paragraph 6-160, step g.

The grain of each disc runs parallel to the indexing flat edges. When assembling disc pack assembly, it is necessary to obtain alternate grain direction. Discs should not be changed from original pack except as noted in paragraph 6-160, step g.

Beveled washers must be installed with round edge side contacting disc assemblies and quantities must be equal at 180 degree positions.

Only the grip portion (unthreaded) of bolts are permitted to contact disc assemblies and bolt lengths must be equal at 180 degree positions.

c. If removed, install disc assemblies (17) to both ends of forward short shaft (3) and to aft short shaft (6) as follows:

(1) Ensure all disc assemblies (17) are assembled as shown in detail A, and preceding caution statements.

NOTE

Bolts (10) may be installed in either direction, for ease of maintenance. Diametrically opposed bolts must be in same direction.

(2) Position disc assemblies (17) to flanged end of shafts and install two diametrically opposed bolts (10), beveled washers (11 and 12), thin steel washers (13), and nuts (14). Observe preceding caution statements and install the two beveled washers (12) with flat sides back-to-back. Torque nuts (14) uniformly in 20 inch-pound increments to **50 TO 70 INCH-POUNDS**.

d. Carefully position forward short shaft (3) between splined adapters (2 and 9) and aft short shaft (6) between splined adapter (8) and splined adapter on forward end of tail rotor driveshaft segment (7). Connect shafts to adapters as follows:

(1) Align open bolt holes in disc assemblies (17) to bolt holes in mating splined adapters (2, 8, and 9) and splined adapter on tail rotor driveshaft segment (7).

(2) Install two diametrically opposed bolts (15), beveled washers (16 and 18), thin steel washers (19), and nuts (20). Observe preceding caution statements and install beveled washers (18) with flat sides back-to-back. Torque nuts (20) uniformly in 20 inch-pound increments to **50 TO 70 INCH-POUNDS**.

(3) Inspect all disc assemblies for distortion resulting in gaps between the individual discs. No gaps exceeding **0.005** inch are permitted between discs. If any gaps are found, loosen bolts, rotate disc back and forth, and tighten bolts. Torque nuts uniformly in 20 inch-pound increments to **50 TO 70 INCH-POUNDS**. Recheck gaps. If gaps still exist, replace disc assembly.

e. Apply coating to aft short shaft (6). (Refer to paragraph 6-172.)

6-172. APPLICATION OF COATING FOR CORROSION PROTECTION — TAIL ROTOR DRIVESHAFTS.

WARNING

Cleaning solvents are flammable and toxic. Use only in well-ventilated area. Avoid skin contact and inhalation of vapors. Protect eyes with safety glasses.

NOTE

Coating is to be applied to the aft short shaft and to tail rotor driveshaft segment assemblies after installation on helicopters.

a. Thoroughly clean driveshafts to receive coating with a cloth saturated with naphtha (C22). Wipe surface dry with a clean cloth before solvent evaporates.

b. Apply a brush chemical conversion coating alodine (C38) to exposed areas of the driveshaft. Mask all bearings and disc assemblies with masking tape (C143).

c. Mix 1 part of clear acrylic lacquer (C90) to 1.5 to 2 parts acrylic lacquer thinner (C147) and apply in accordance with substep (1) and (2).

(1) Apply a wet spray coat, holding spray gun close to the surface (approximately **6 to 8** inches). After **15 to 30** minutes drying time, apply a second coat in the same manner as the first coat.

(2) Apply the lacquer coating quickly over the surface, overlapping the previous strokes, but not reworking the entire coated area. After **30** minutes drying time, apply a second coat in the same manner as the first coat.

d. Curing of the second coat may be accomplished in accordance with substep (1) or (2).

(1) After second coat is applied full cure can be obtained in maximum drying time of **48** hours at ambient room temperature.

(2) After second coat is applied, accelerated curing can be accomplished by air drying for **30** minutes, then heat lamp bake at **150°F (66°C)** for **2** hours.

(3) Remove masking tape.

e. After curing, the coating shall be smooth and uniform over entire surface with no area of shafting uncoated. Coating shall have a dry film thickness of **0.001 to 0.002** inch (**1.000** mil to **2.000** mils). Areas found to be uncoated may be repaired in accordance with step f.

WARNING

Cleaning solvents are flammable and toxic. Use only in well-ventilated area. Avoid skin contact and inhalation of vapors. Protect eyes with safety glasses.

f. Isolated areas of non-adhesion shall be refinished by feathering the isolated areas with 400 to 600 grit sandpaper (C126 or C127) or abrasive cloth (C45). Wipe areas with naphtha (C22) and refinish in accordance with step c.

g. Apply corrosion preventive compound (C50) to seam where hanger bearing outer race contacts hanger. Do not allow corrosion preventive compound to contact bearing seals.

6-173. DISC ASSEMBLY.

6-174. DESCRIPTION — DISC ASSEMBLY. Refer to paragraph 6-120.

6-175. INSPECTION — DISC ASSEMBLY.

Premaintenance Requirements for Disc Assembly

Condition	Requirements
Model	OH-58A/C
Part No. or Serial No.	All
Special Tools	None
Test Equipment	Fluorescent Penetrant Inspection Unit
Support Equipment	None
Minimum Personnel Required	One
Consumable Materials	None
Special Environmental Conditions	None
References	TM 1-1520-254-23

Inspect disc assemblies while installed on tail rotor driveshafts and forward and aft short shafts. Refer to paragraph 6-160. No cracks allowed. If a crack in the disc assembly is suspected, refer to TM 1-1520-254-23, Technical Manual Aviation Unit Maintenance (AVUM) and Aviation Intermediate Maintenance (AVIM) Manual Nondestructive Inspection Procedures for OH-58 Helicopter Series.

6-176. CLEANING — DISC ASSEMBLIES. Refer to paragraph 6-161.

6-177. REMOVAL — DISC ASSEMBLIES. Refer to paragraphs 6-162 and 6-170.

6-178. INSTALLATION — DISC ASSEMBLIES. Install disc assemblies on tail rotor driveshafts and forward and aft short shafts. Refer to paragraphs 6-165 and 6-171.

6-179. REPAIR — DISC ASSEMBLY. No repair is authorized.

6-180. ADJUSTMENT AND ALIGNMENT — TAIL ROTOR DRIVESHAFT. Refer to paragraphs 6-165, tail rotor driveshafts, and 6-171, for forward and aft short shafts.

SECTION V. INTERMEDIATE GEARBOX

(NOT APPLICABLE)

SECTION VI. TAIL ROTOR GEARBOX

6-181. TAIL ROTOR GEARBOX. (Prior to MWO 55-1520-228-50-25.)

NOTE

Tail rotor gearbox after compliance of MWO 55-1520-228-50-25, refer to paragraph 6-199.

6-182. DESCRIPTION — TAIL ROTOR GEARBOX. The tail rotor gearbox contains **90** degree spiral bevel gears providing a speed reduction of **2.350 to 1.000**. The bevel gears and mountings are designed to controlled dimensions to provide interchangeable replacement of parts without adjustment. The housing is a magnesium casting attached to the fuselage structure with four studs. A breather type filler cap, electrical chip detector drain plug and oil level sight gage are accessible from ground level. Refer to figure 6-28.

6-183. INSPECTION — TAIL ROTOR GEARBOX.

Premaintenance Requirements for Tail Rotor Gearbox

Condition	Requirements
Model	OH-58A/C
Part No. or Serial No.	All
Special Tools	None
Test Equipment	Eddy Current Inspection Unit
Support Equipment	None
Minimum Personnel Required	One
Consumable Materials	None
Special Environmental Conditions	None
References	TM 1-1520-254-23

a. Inspect tail rotor gearbox for leaking seals, cracks, security, and metal contamination. No cracks allowed. If a crack in the tail rotor gearbox is suspected, refer to TM 1-1520-254-23, Technical Manual Aviation Unit Maintenance (AVUM) and Aviation Intermediate Maintenance (AVIM) Manual Nondestructive Inspection Procedures for OH-58 Helicopter Series.

NOTE

Total static or dynamic leakage for input or output seal must not exceed two drops per minute. Total gearbox leakage at all sources must not exceed six drops per minute.

b. Inspect filler plug (7) for proper locking and security.

c. Inspect for defective packing.

d. Inspect tail rotor gearbox oil for evidence of water. When water is present the oil has a dirty milky appearance. If this condition is present or suspected, drain and flush until water contamination is removed, then service gearbox. Refer to paragraph 1-11 for servicing. Condensation on the inside of the sight glass is acceptable, providing that the oil does not have a dirty milky appearance.

e. Inspect sight glass for security, cracks, crazing, or discoloration. If any of these conditions are found, the sight glass will be replaced.

f. Inspect the tail rotor gearbox shaft for excessive movement as follows:

(1) Total radial play shall not exceed **0.003** inches on output shaft. Measure by installing a dial indicator one inch outboard of gearbox output seal. Total radial movement of the shaft when moved up and down shall not exceed **0.003** inches at this point. The movement should be performed by applying thumb and index finger to the outboard end of shaft and enough up and down pressure to check the actual looseness. Movement in excess of **0.003** warrants replacement of the tail rotor gearbox.

(2) Axial movement of the tail rotor gearbox output shaft is not permitted. Replace the gearbox if there is any axial movement of the output shaft.

(3) Total allowable wobble of the gearbox output shaft is **0.009** inches. Measured by installing a dial indicator **6-1/2** inches outboard of gearbox output seal (just inboard of tail rotor mounting splines).

(4) Inspect visible area of splines for nicks, dents, scratches, and corrosion. One third of the spline teeth may be corroded or damaged (dented, nicked, or scratched) if damage does not reduce the driving (profile) area by more than **5%** and:

(a) No scratches or other damage deeper than **0.004** inch or longer than **0.250** inch exist.

(b) No three consecutive teeth are damaged.

(c) Raised material is smoothed off.

(d) Use two **0.060** diameter pins to check spline wear, minimum O.D. is to be **1.0873** inch.

(e) Damage in other areas is not deeper than **0.006** inch or covering not more than 10% of area.

g. Inspect input pinion (5) refer to paragraph 6-191.

6-184. CLEANING — TAIL ROTOR GEARBOX.

WARNING

Degreasing Solvent is combustible and toxic to eyes, skin, and respiratory tract. Wear protective gloves and goggles/face shield. Avoid repeated or prolonged contact. Use only in well-ventilated areas (or use approved respirator as determined by local safety/industrial hygiene personnel). Keep away from open flames or other sources of ignition.

Clean exterior of the tail rotor gearbox with degreasing solvent (C62) and wipe with dry clean cloth.

6-185. REMOVAL — TAIL ROTOR GEARBOX.

NOTE

If tail rotor gearbox is being removed for return to overhaul, preserve the gearbox. Coat splines with corrosion preventive compound (C51) prior to packaging. Refer to TM 38-230.

a. Remove vertical fin. Refer to paragraph 2-267 for removal procedures.

b. Disconnect electrical lead from chip detector.

c. Remove tail rotor hub and blade assembly (9, figure 6-28). Refer to paragraph 5-183.

d. Remove two opposed bolts to disconnect disc assembly (2) on aft end of long tail rotor driveshaft from splined adapter (4) on gearbox input shaft.

e. Remove tailboom fairing for access to gearbox mounting studs.

f. Remove lower bolt connecting pitch change lever assembly to rod assembly.

g. Remove nuts (10) from gearbox mounting studs at each corner of gearbox.

h. Remove gearbox from tailboom with pitch change mechanism attached.

i. Check two spacer washers and aluminum angle on tailboom at gearbox mounting point for secure bonding to tailboom. If a washer or washers are loose, retain washer and refer to Chapter 2 for bonding instructions. Inspect the two forward gearbox mounting holes to ensure that a radius block is bonded below each hole.

j. Remove and retain pitch change mechanism for use on new gearbox installation. Disassemble, clean and inspect pitch change mechanism in accordance with paragraph 5-204 prior to installation on new gearbox.

k. Before installing a new or overhauled tail rotor gearbox, inspect tail rotor gearbox case studs for perpendicularity. Refer to paragraph 6-190 to replace any broken, bent, damaged, or loose studs.

CAUTION

A bent stud will score gearbox mounting holes on tail rotor gearbox support and shall result in the replacement of stud or gearbox support.

l. Inspect and verify serviceable condition for the bore of gearbox mounting holes on tail rotor gearbox support.

6-186. REPAIR — TAIL ROTOR GEARBOX. Refer to paragraphs 6-188 through 6-198.

6-187. INSTALLATION — TAIL ROTOR GEARBOX.

a. Check tail rotor gearbox mounting area on tailboom to ensure:

(1) Two washers (P/N 206-040-426-1) are bonded in place at rear tail rotor gearbox stud holes.

(2) Two washers (P/N 140-009-G17H48) are bonded in place at the top forward stud holes on tailboom serial numbers BCLN-0827 and subsequent. (Washers are not required at top forward stud holes on prior serial numbered tailbooms.)

NOTE

It is possible to determine washer location by measuring washer thickness (refer to figure D-48). If washers are not within 0.005 of original thickness, replace them.

Refer to paragraph 2-249, step c. When locally manufacturing washers, use only 5052 aluminum alloy.

(3) Two radius blocks are bonded in place inside tailboom and under forward tail rotor gearbox stud holes.

CAUTION

If the required upper washers or the required radius blocks inside the tailboom are missing, refer to tailboom repair, paragraph 2-249, step c.

(4) Before installing a new or overhauled tail rotor gearbox inspect the inside surfaces of the input pinion shaft (5, figure 6-28) for corrosion. Clean and treat corroded areas in accordance with paragraph 6-191. If no corrosion is present, protect the inside surfaces of the pinion gear from corrosion in accordance with paragraph 6-191, step c.

(5) Before installing a new or overhauled tail rotor gearbox, inspect tail rotor gearbox case studs for perpendicularity. Refer to paragraph 6-190 to replace any broken, bent, damage, or loose studs.

CAUTION

A bent stud will score gearbox mounting holes on tail rotor gearbox support and shall results in the replacement of stud or gearbox support.

(6) Serviceable condition for gearbox mounting holes on tail rotor gearbox support.

b. Position gearbox on tailboom and check to ensure that gearbox rests evenly on all four points.

NOTE

If gearbox does not rest evenly on all four mounting points of tailboom, refer to paragraph 2-245 for inspection of tailboom and paragraph 2-249 for repairs. It is satisfactory if the mounting points for the tail rotor gearbox are within 0.002 inch of a plane surface. Also, shimming may be used if required to make gearbox set solid.

c. Apply a thin film of grease (C77) to the mating splines of adapter (4, figure 6-28) and input pinion shaft (5). Install adapter.

d. Install dissimilar metal tape (C138) to surface of bonded washers.

e. Position gearbox on tailboom and connect pitch rod assembly. Secure gearbox with aluminum washer (12), steel washer (11), and nut (10) in that sequence. Torque nut **50 TO 70 INCH-POUNDS** plus drag torque. Using lacquer (C92) install slippage mark.

f. Connect electrical lead to chip detector plug.

g. Install pitch change mechanism. Refer to paragraph 5-214.

h. Install tail rotor assembly. Refer to paragraph 5-188 or 5-189 as applicable.

i. Connect long tail rotor driveshaft to gearbox splined adapter. Refer to paragraph 6-157.

j. Install vertical fin. Refer to paragraph 2-269.

k. Install tailboom fairing. Refer to paragraph 2-281.

l. Drain, flush, and service gearbox. Refer to paragraph 6-183, step 6-183d.

6-188. REPLACEMENT — OUTPUT SEAL, TAIL ROTOR GEARBOX.

NOTE

See paragraph 5-183 for removal of tail rotor hub and blade assembly.

a. Remove nuts (11, figure 6-31), washers (12 and 13). Remove cap (14) from case and shaft.

b. Press seal (10) out of cap.

c. Press new seal in cap.

d. Replace packing (15) and reinstall cap (14) and secure with nuts (11), and washers (12 and 13).

e. Reinstall hub and blade assembly. Refer to paragraphs 5-188 or 5-190 as applicable.

6-189. REPLACEMENT — INPUT SEAL, TAIL ROTOR GEARBOX.

NOTE

Input seal may be replaced with gearbox mounted on the tailboom.

a. To replace seal with gearbox installed, remove tail rotor driveshaft and fabricate work aid by attaching a metal handle (figure 6-29) to splined adapter (4, figure 6-28) to use instead of clamping splined adapter in vise as directed in step c. and step i. below. Drain tail rotor gearbox oil into suitable container (paragraph 1-11).

NOTE

Refer to paragraph 6-185 for removal of tail rotor gearbox assembly.

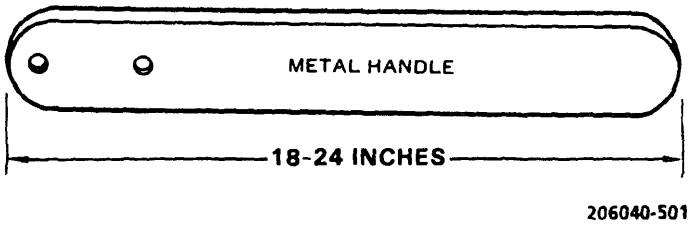

Figure 6-29. Work Aid

b. Use two offset screwdrivers and lift two opposite locking tangs of keywasher (20, figure 6-31) and force washer outboard to free it from nut (21). After washer is freed from nut, slide washer outboard and free from serrations on shaft threads. Replace key washer (20) with new washer on reassembly.

c. Remove input shaft inner nut (21) as follows:

(1) Clamp splined adapter (4, figure 6-28) in vise and position splined end of input pinion (23) in adapter.

(2) Remove nut (21) with spanner wrench.

d. Remove seal (22) from input nut (24) as follows:

CAUTION

Do not disturb the torque of input nut (24).

(1) The primary method for removal of the seal (22) is as follows:

(a) Install two small self-tapping metal screws in metal housing of seal, **180** degrees apart.

(b) Use two offset screwdrivers under the heads of the screws and lift seal (22) out of the input nut (24).

(2) The alternate method for removal of the seal (22) is as follows:

(a) Fabricate a work aid (figure 6-30).

(b) Install work aid with three self-tapping metal screws in metal housing of seal, approximately **120** degrees apart.

(c) Using puller, battery terminal, (T44), remove seal.

e. Remove and inspect spacer (26), for damage or excessive wear to oil seal surface, replace if required, (maximum allowable depth of wear on oil seal contact surface is **0.002** inch, or to a maximum diameter of **1.496** inch).

f. Replace packing (27) and install serviceable spacer (26). Pre-lubricate packing and spacer with lubricating oil (C103 or C103.1).

g. Before installing seal (22), visually check shaft and nut housing bore finishes for tooling marks, nicks, and scratches. Check entering edge of shaft for proper chamfer and deburring, so as not to cut or bend back lip of seal. Pre-lubricate seal by wiping shaft and lip of seal with lubricating oil (C103 or C103.1).

h. Press new seal (22) in place.

i. Lubricate threads on input pinion gear (23) and install nut (21) on gear with flat side toward seal (22) and the beveled side toward keywasher (20). Clamp splined adapter (4, figure 6-28) in vise and position splined end of input shaft in adapter. Use spanner wrench with torque wrench and torque inner nut (21) to **310 TO 350 INCH-POUNDS.**

CAUTION

Ensure that serrated keywasher (20) tangs are locked behind nut (21).

j. Position a new serrated keywasher (20) on shaft, then use plastic mallet to force locking tangs of washer over nut (21) with two locking tangs locked behind nut.

k. Service tail rotor gearbox with oil (paragraph 1-11).

6-190. TAIL ROTOR GEARBOX STUD REPLACEMENT. (AVIM)

a. Remove tail rotor gearbox. Refer to paragraph 6-185.

b. Remove broken, bent, damaged, or loose studs. Inspect threaded holes in case.

NOTE

If stud hole threads are unserviceable, return gearbox for overhaul.

c. Clean out small vent hole to bottom of threaded hole. Apply unreduced zinc chromate primer (C118) to threads of replacement studs and install in accordance with table 6-4.

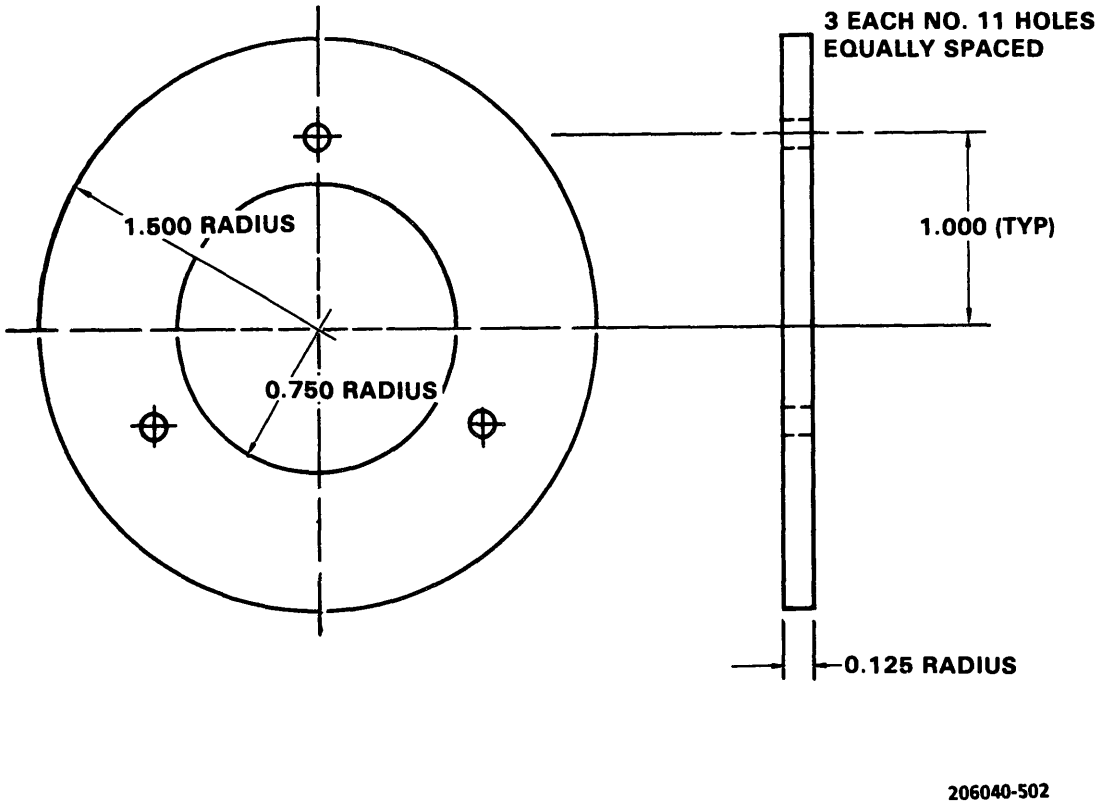

NOTE:

1. All dimensions are in inches.
2. May be fabricated from aluminum or steel alloy.

Figure 6-30. Work Aid

1. Retaining Ring
2. Packing
3. Sight Glass
4. Retainer Ring
5. Pin
6. Cap
7. Spring Assembly
8. Packing
9. Oil Filler Cap Plug
10. Seal
11. Nut
12. Flat Washer
13. Flat Washer
14. Cap
15. Packing
16. Bearing Liner
17. Pin, Tapered
18. Bearing
19. Retaining Ring
20. Keywasher
21. Nut
22. Seal
23. Input Pinion Gear
24. Nut
25. Oil Sight Gage Indicator
26. Spacer
27. Packing
28. Flat Washer
29. Retaining Ring
30. Pin
31. Chain

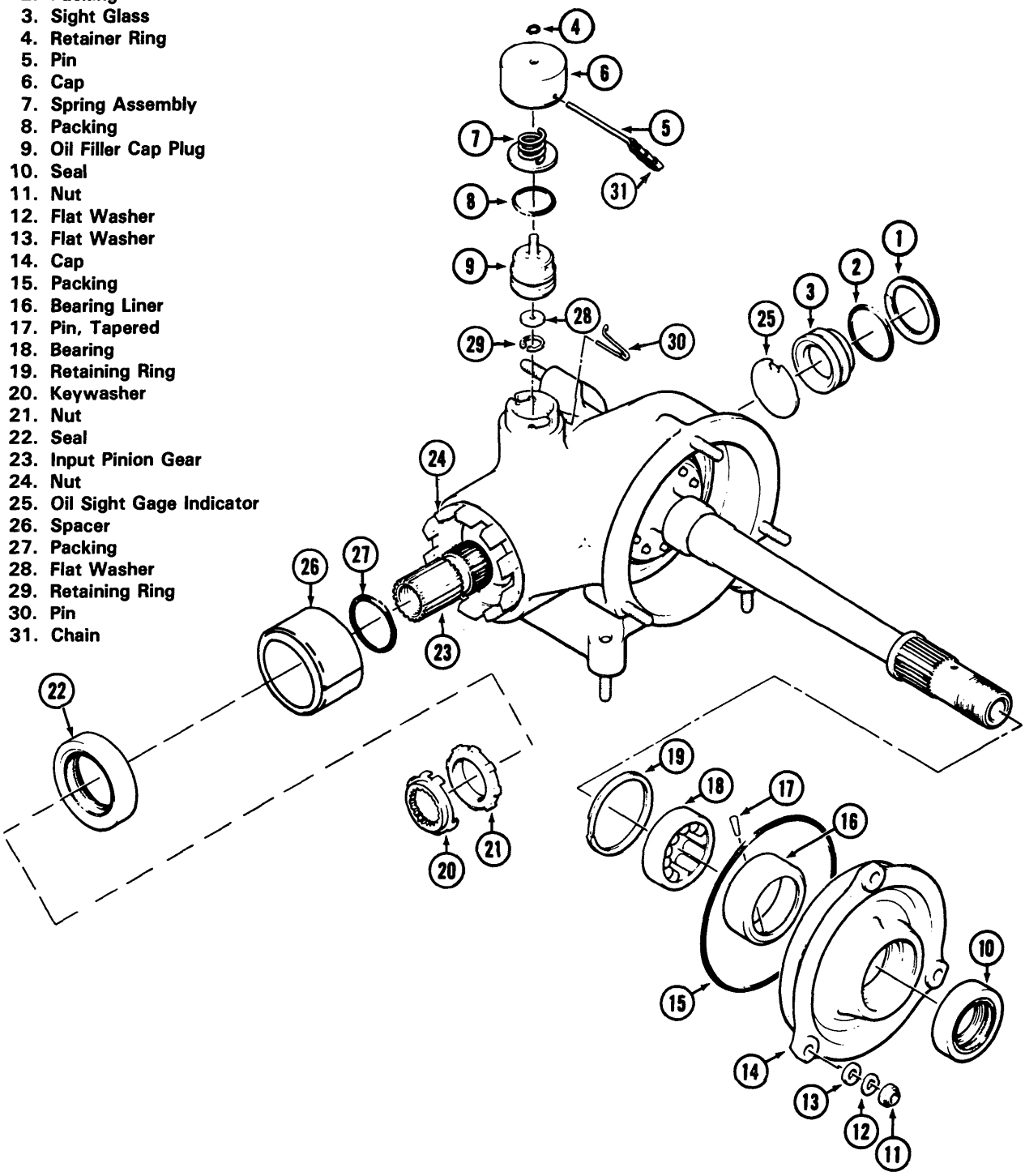

Figure 6-31. Tail Rotor Gearbox Repair

Table 6-4. Stud Replacement Limits

LOCATION	STUD SIZE	STUD HEIGHT	INCH-POUNDS
Mounting Base (4 Studs)	1/4	0.75	50-95
Output Port	1/4	0.75	50-95
Pitch Change Port (3 Studs)	1/4	0.88	50-95

NOTE

Stud retaining holes must be tapped to a sufficient depth so that no imperfect threads are engaged. Install replacement studs to height shown in table. Stud driving torque must be within limits shown. If driving torque is below the low limit, replace the stud with proper oversize stud so that torque will be within range (see TM 55-1520-228-23P). Undersize and oversize identification is stamped on end of stud. Apply zinc chromate primer to thread studs which will be in contact with case and install while primer is wet.

6-191. CORROSION TREATMENT FOR INSIDE SURFACES OF THE INPUT PINION GEAR. (AVIM).

a. Remove tail rotor gearbox. Refer to paragraph 6-185.

b. Remove pitting and corrosion inside input pinion gear (23, figure 6-31) by honing or using a wire brush. A maximum of **0.010** inch may be removed from the inside walls for corrosion in concentrated form. Remove an equal amount of material from the opposite wall to eliminate a possible out of balance condition. Feather out all repairs. Replace the gearbox if corrosion removal exceeds limits in figure 6-32.

c. After cleaning, protect the inside surfaces against further corrosion by masking the threaded area and applying epoxy polyamide primer (C116) to all other internal surfaces.

6-192. CHIP DETECTORS — TAIL ROTOR GEARBOX.

6-193. DESCRIPTION — CHIP DETECTORS. The chip detector is the removable center portion of the chip detector and drain plug assembly. It consists of a self-lock bayonet probe with a permanent magnet at the end. When the magnet attracts sufficient metal to complete the circuit between pole and the ground, the T/R CHIP DET segment will illuminate on the caution panel. On installation, torque drain plug **75 TO 125 INCH-POUNDS.**

6-194. REMOVAL — CHIP DETECTORS.

a. Disconnect the electrical lead from chip detector stud.

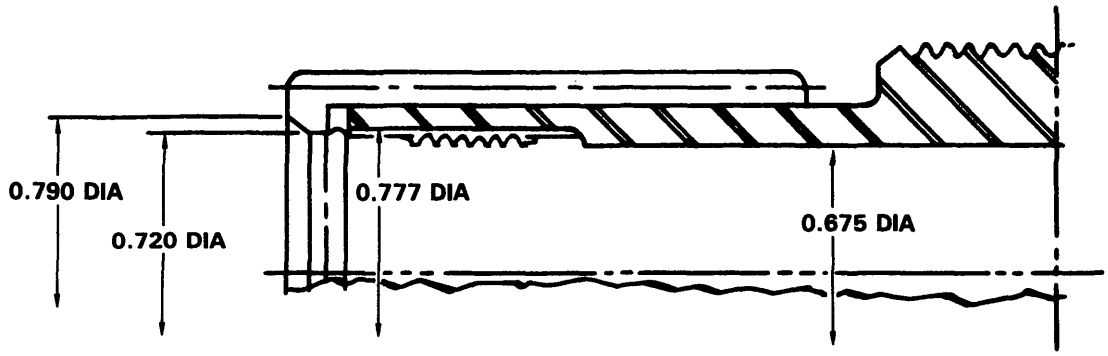

NOTE: All dimensions are in inches.

206040-504

Figure 6-32. Maximum Internal Corrosion Removal Limits For Tail Rotor Gearbox Input Pinion Gear

CAUTION

Improper and/or rough handling of chip detectors and the electrical connection is the major cause of failure. Use care in removal, installation, and connection of the terminals to avoid false indications in the caution light system.

b. Press detector in, turn counterclockwise, and remove from plug.

6-195. INSPECTION — CHIP DETECTORS.

a. Inspect chip detector for stripped or damaged bayonet pins.

b. Check for accumulation of metal particles on magnet. Presence of metal may indicate need for further investigation and corrective action. Compare particles found with metal particle identification list. Refer to paragraph 6-4 and table 6-2.

c. Inspect chip detector electrical connector mounting stud for security.

6-196. INSTALLATION — CHIP DETECTORS.

a. Replace packings on chip detector insert if needed.

b. Position insert in plug, push insert in as far as possible and turn clockwise to lock in place.

c. Connect electrical wire to stud.

6-197. SIGHT GLASS REPLACEMENT.

a. Remove retainer ring (1, figure 6-31), packing (2), and sight glass (3).

b. Install oil sight gage indicator (25) (oil level line horizontal with notch on bottom securely into notch in gearbox). New packing (2), sight glass (3), and retaining ring (1).

6-198. FILLER PLUG PACKING REPLACEMENT.

a. Remove cap (6) and oil filter plug (9) as an assembly.

b. Remove packing (8) from plug (9) and install new packing.

6-199. TAIL ROTOR GEARBOX. (After compliance with MWO 55-1520-228-50-25.)

6-200. DESCRIPTION — TAIL ROTOR GEARBOX. The tail rotor gearbox contains two spiral bevel gears positioned **90** degrees to each other. The direction of drive is changed **90** degrees and them is a speed reduction of **2.350 to 1.000** at the gearbox. The gearbox housing is magnesium and is attached to the tailboom with four studs, nuts, washers, and two dowel pins for alignment. The gearbox assembly includes a breather-type filler cap, oil level sight gage, and a combination electrical chip detector and self-closing valve. The self-closing valve makes it possible to check the electric chip detector for metal particles without draining oil from the gearbox. The self-closing valve also serves as a drain plug for gearbox oil.

Premaintenance Requirements for Tail Rotor Gearbox

Condition	Requirements
Model	OH-58A/C
Part No. or Serial No.	All
Special Tools	(T19) (T37)
Test Equipment	None
Support Equipment	None
Minimum Personnel Required	One
Consumable Materials	(C2) (C10) (C17) (C19) (C23) (C32) (C39) (C43) (C45) (C51) (C62) (C77) (C80) (C88) (C96) (C103) (C103.1) (C116) (C118) (C126) (C127) (C129) (C143) (C154)
Special Environmental Conditions	None

6-201. INSPECTION — TAIL ROTOR GEARBOX.

Premaintenance Requirements for Tail Rotor Gearbox

Condition	Requirements
Model	OH-58A/C
Part No. or Serial No.	All
Special Tools	None
Test Equipment	Eddy Current Inspection Unit
Support Equipment	None
Minimum Personnel Required	One
Consumable Materials	None
Special Environmental Conditions	None
References	TM 1-1520-254-23

a. Inspect tail rotor gearbox (1, figure 6-33) for leaking seals, cracks, security, and damage. No cracks allowed. If a crack in the tail rotor gearbox is suspected, refer to TM 1-1520-254-23, Technical Manual Aviation Unit Maintenance (AVUM) and Aviation Intermediate Maintenance (AVIM) Manual Nondestructive Inspection Procedures for OH-58 Helicopter Series.

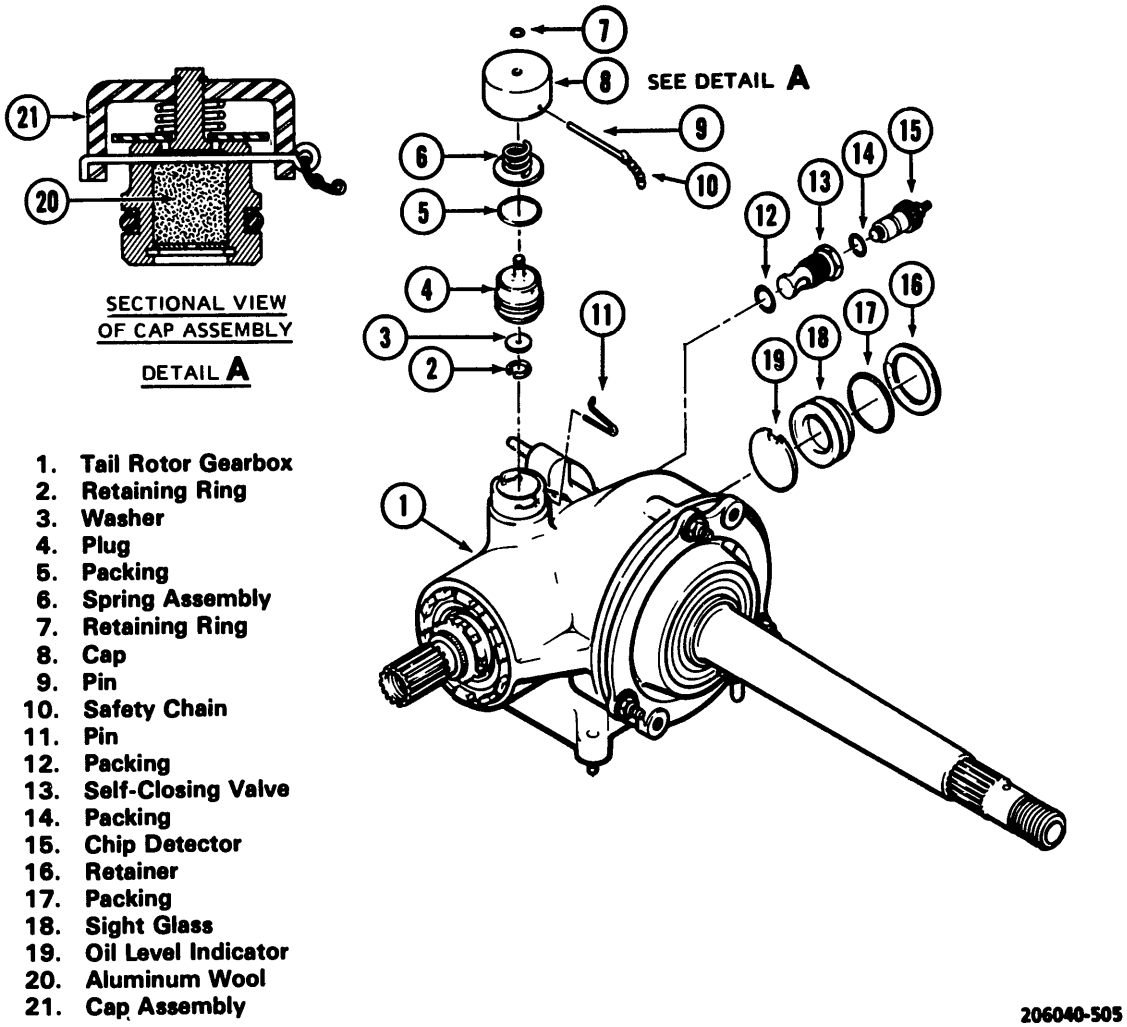

Figure 6-33. Tail Rotor Gearbox External Components

NOTE

Total static or dynamic leakage for input or output seal must not exceed two drops per minute. Total gearbox leakage at all sources must not exceed six drops per minute.

b. Inspect electric chip detector (15) for metal particles and self-closing valve (13) for leakage. (Refer to paragraph 6-220.)

NOTE

Placing a small amount of sealant, NSN 8040-01-252-8567, over the lock ring on top of the tail rotor gearbox cap assy will help prevent water contamination of the gearbox and does not affect the venting ability of the cap.

c. Inspect tail rotor gearbox oil for evidence of water. When water is present, the oil will have a dirty, milky appearance. If this condition is present or suspected, drain, flush, and service tail rotor gearbox (1). (Refer to paragraph 1-11.) Condensation on the inside of the sight glass is acceptable providing that the oil does not have a dirty milk appearance.

d. Inspect cap assembly (21, detail A) for positive locking and cleanliness.

e. Inspect sight glass (18) and oil level indicator (19) for leakage, cracks, and crazing. Sight glass (18) and oil level indicator (19) are considered serviceable if oil level and oil condition can be verified.

f. Inspect exterior of output cap assembly (6, figure 6-34) and gearbox case (1) for mechanical and corrosion damage. Damage which does not exceed **0.015** inch may be blended out using sandpaper (C126 or C127) or abrasive cloth (C45). Touch up repaired areas with two coats of epoxy polyamide primer (C116). For damage that exceeds **0.015** inch refer to higher level of maintenance.

g. When tail rotor gearbox is removed, inspect mounting area on tailboom to ensure that the four laminated shims are bonded in place where tail rotor gearbox lugs rest on surface of support. (See figure 6-35.)

(1) Position tail rotor gearbox on tailboom and check that gearbox rests evenly on all four shims (figure 6-35).

(2) Inspect dowel pin holes on tailboom for elongation and dowel pins on tail rotor gearbox for condition. Wear shall not exceed 0.005" for the tail rotor gearbox mounting holes and 0.001" for the dowel pin holes.

h. Inspect output shaft (2, figure 6-34) for out-of-round condition by installing a dial indicator just outboard of splines. If maximum total indicator reading (TIR) is **0.005** inch, overhaul gearbox.

i. Inspect output shaft (2) for excessive play. The maximum radial play allowable is **0.003** inch measured **1.000** inch outboard of seal (8). No axial movement is permitted. If axial play is noted or radial play exceeds **0.003** inch, overhaul gearbox. Refer to paragraph 6-183.

j. Inspect visible surfaces of output shaft (2) and pinion gear (12) for corrosion and pitting.

6-202. CLEANING — TAIL ROTOR GEARBOX.

WARNING

Degreasing Solvent is combustible and toxic to eyes, skin, and respiratory tract. Wear protective gloves and goggles/face shield. Avoid repeated or prolonged contact. Use only in well-ventilated areas (or use approved respirator as determined by local safety/industrial hygiene personnel). Keep away from open flames or other sources of ignition.

a. Clean exterior of tail rotor gearbox with degreasing solvent (C62). Dry with filtered compressed air. Do not allow solvent to contact seals or rod end bearings.

WARNING

Degreasing Solvent is combustible and toxic to eyes, skin, and respiratory tract. Wear protective gloves and goggles/face shield. Avoid repeated or prolonged contact. Use only in well-ventilated areas (or use approved respirator as determined by local safety/industrial hygiene personnel). Keep away from open flames or other sources of ignition.

b. Remove filler cap (21, figure 6-33) and rinse in degreasing solvent (C62). Dry with filtered compressed air.

6-203. REMOVAL — TAIL ROTOR GEARBOX.

NOTE

If tail rotor gearbox is being removed for return to overhaul, preserve the gearbox. Coat splines with corrosion preventive compound (C51) prior to packing. Refer to TB 55-9150-200-24.

a. Remove vertical fin (paragraph 2-269).

b. Disconnect electrical lead from chip detector (15, figure 6-33).

c. Remove tail rotor hub and blade assembly (9, figure 6-36). (Refer to paragraph 5-229.)

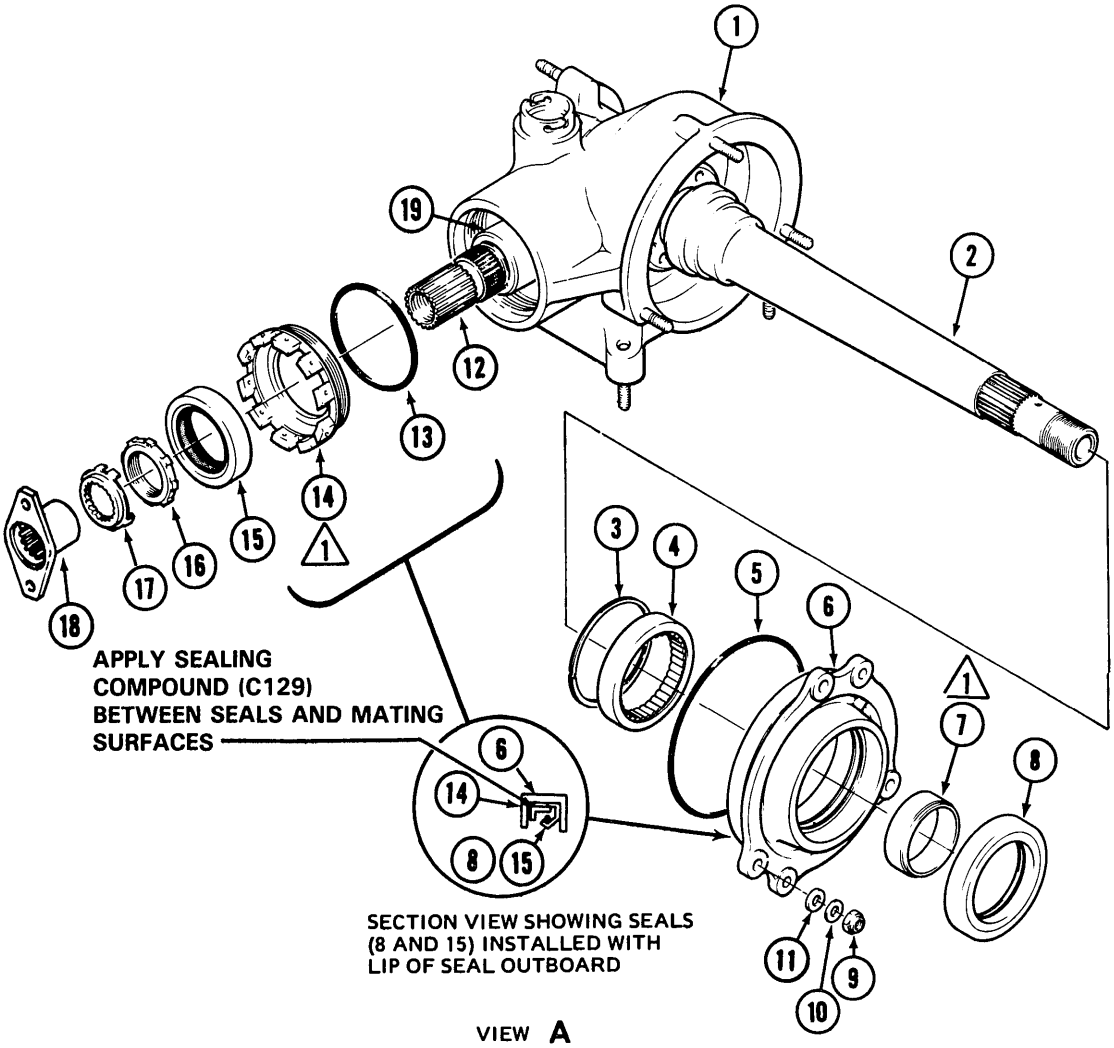

1. Gearbox Case
2. Output Shaft
3. Retaining Ring
4. Bearing
5. Packing
6. Cap Assembly
7. Sleeve
8. Seal
9. Nut
10. Thin Steel Washer
11. Aluminum Washer
12. Input Pinion Shaft
13. Packing
14. Input Shaft Nut
15. Seal
16. Locknut
17. Lockwasher
18. Slip Adapter
19. Spacer

NOTE

1 Parts shown disassembled for clarity only. These parts are removed at depot level only.

206040-506

Figure 6-34. Tail Rotor Gearbox Seal Replacement

1. Support
2. Laminated Shim 120-006C24E9 (4 Reqd)
3. Tape 206-032-004-43 (4 Reqd)
4. Spacer
5. Dowel Pin
   Alignment Holes

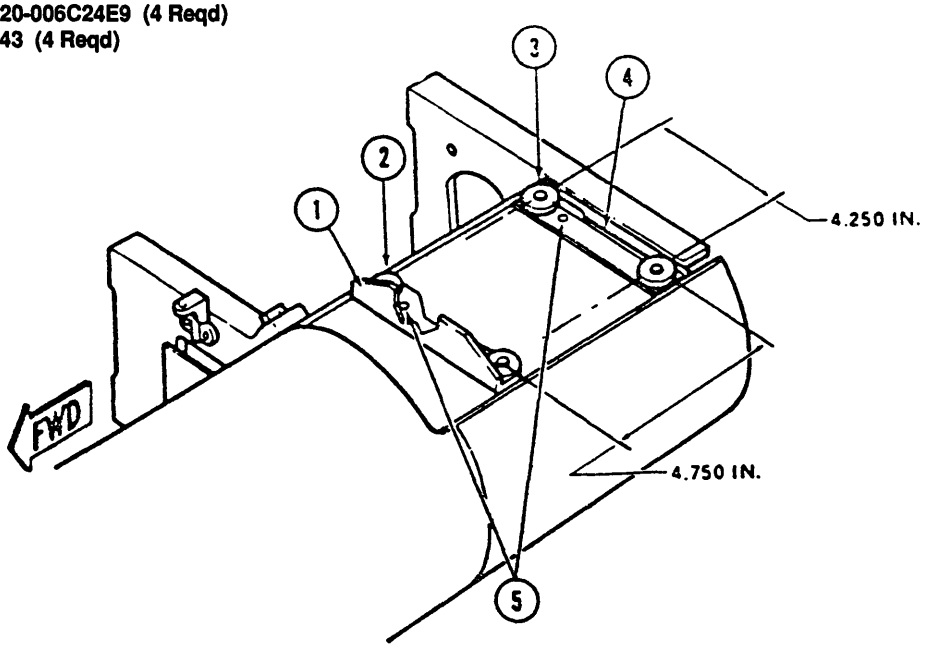

NOTE: Four laminated shim washers to be in same plane within 0.002 inch and parallel within 0.001 inch across their diameters.

206040-507

Figure 6-35. Tail Rotor Gearbox Mounting (After Incorporation of MWO 55-1520-228-50-25)

CAUTION

After a disc assembly has been run on a helicopter, discs should not be changed from original pack except as noted in paragraph 6-160, step g.

d. Remove two diametrically opposed bolts (19), beveled washers (18 and 16), thin steel washers (15), and nut (14). Leave disc assembly (17) attached to tail rotor driveshaft segment (20).

e. Disconnect pitch change control rod (22) (see detail A), from antitorque control system. (Refer to paragraph 5-208.)

f. Drain tail rotor gearbox (8). Remove chip detector (15, figure 6-33) and self-closing valve (13). Remove and discard packings (12 and 14).

g. Remove nuts (10, figure 6-36) and steel washers (11 and 12) from four studs.

NOTE

Laminated shims are not used on tailboom P/N 206-032-004-105 and are not recorded on data plate. The tail rotor gearbox is installed using only the tape between gearbox and tailboom mount. All other procedures are the same.

h. Remove tail rotor gearbox (8) from tailboom. Check security of four laminated shims (2, figure 6-35) on tailboom which form the mounting surface for tail rotor gearbox. If a laminated shim is missing, obtain correct shim thickness from tailboom data plate. Prepare a new shim to the required thickness and bond in place with adhesive (C19). Ensure shim surfaces meet requirements of figure 6-35.

i. Remove and store filler cap (8, figure 6-33). Install dehydrator (T37).

NOTE

An appropriate entry shall be made upon installation of dehydrator (T37).

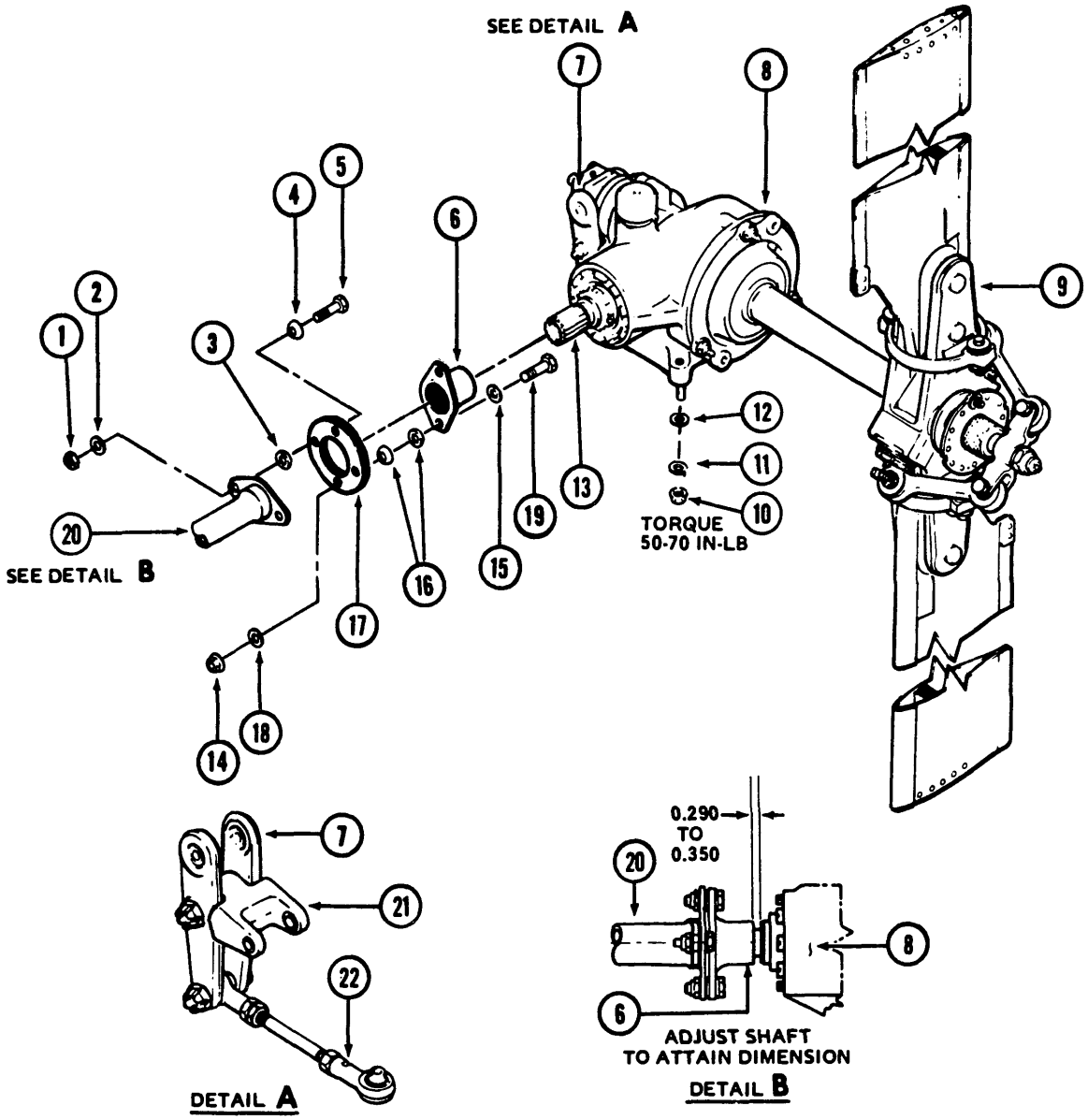

1. Nut
2. Thin Steel Washer
3. Beveled Washer
4. Beveled Washer
5. Bolt
6. Slip Adapter
7. Pitch Change Levers
8. Tail Rotor Gearbox
9. Tail Rotor Hub and Blade Assembly
10. Nut
11. Steel Washer
12. Steel Washer
13. Input Pinion Shaft
14. Nut
15. Thin Steel Washer
16. Beveled Washers
17. Disc Assembly
18. Beveled Washer
19. Bolt
20. Sixth Tail Rotor Driveshaft Segment
21. Idler Assembly
22. Pitch Change Control Rod

NOTE: All dimensions are in inches.

206040-508

Figure 6-36. Tail Rotor Gearbox (After Incorporation of MWO 55-1520-228-50-25)

j. Remove and retain pitch change mechanism for new gearbox installation. Disassemble, clean and inspect pitch change mechanism in accordance with paragraph 5-204 prior to installation on new gearbox.

k. Before installing a new or overhauled tail rotor gearbox, inspect tail rotor gearbox case studs for perpendicularity. Refer to paragraph 6-125 to replace any broken, bent, damaged, or loose studs.

CAUTION

A bent stud will score gearbox mounting holes on tail rotor gearbox support and shall result in the replacement of stud or gearbox support.

l. Inspect and verify serviceable condition for the bore of gearbox mounting holes on tail rotor gearbox support.

6-204. REPAIR — TAIL ROTOR GEARBOX. (Refer to paragraphs 6-207 through 6-224.)

6-205. INSTALLATION — TAIL ROTOR GEARBOX.

NOTE

Laminated shims are not used on tailboom P/N 206-032-004-105 and are not recorded on data plate. The tail rotor gearbox is installed using only the tape between gearbox and tailboom mount. All other procedures are the same.

a. Check that four laminated shims are bonded in place where tail rotor gearbox mounts on tailboom. (Figure 6-35 and paragraph 6-203, step h.)

WARNING

Acetone is extremely flammable and toxic to eyes, skin, and respiratory tract. Wear protective gloves and goggles/face shield. Avoid repeated or prolonged contact. Use only in well-ventilated areas (or use approved respirator as determined by local safety/industrial hygiene personnel). Keep away from open flames, sparks, hot surfaces or other sources of ignition.

(1) Before installing a new or overhauled tail rotor gearbox, inspect tail rotor gearbox case studs for perpendicularity. Refer to paragraph 6-125 to replace any broken, bent, damaged, or loose studs.

CAUTION

A bent stud will score gearbox mounting holes on tail rotor gearbox support and shall result in the replacement of stud or gearbox support.

(2) Inspect and verify serviceable condition for the bore of gearbox mounting holes on tail rotor gearbox support.

b. Clean surfaces of bonded shims on tailboom with acetone (C2). Install vinyl tape (3, figure 6-35) to upper surface of the four laminated shims. Touch up bare metal surfaces with epoxy polyamide primer (C116).

(1) Before installing a new or overhauled tail rotor gearbox inspect the inside surfaces of the input pinion shaft (13) for corrosion.

(2) Clean and treat corroded areas in accordance with paragraph 6-191.c.

CAUTION

On certain tailbooms there may be manufacturing variances which will not allow the required two threads showing after nut (10) and steel washers (11 and 12) have been installed. Two threads must be showing, if not attainable, reduce the washer to one AN960-416L or a minimum to one AN960PD-416.

c. Position tail rotor gearbox (8, figure 6-36) on tailboom aligning dowel pins with holes in tailboom. Install steel washers (11 and 12) and new nuts (10) on each stud. Torque nuts (10) **50 to 70 inch-pounds** plus drag torque. Use paint (C92), install slippage mark.

d. Apply a coating of grease (C77) to splines of input pinion shaft (13), and to splines of slip adapter (6). Position slip adapter (6) on input pinion shaft (13).

e. Install pitch change levers (7), idler assembly (21), and pitch change control rod (22), if removed. (Refer to paragraph 5-214.)

f. Apply a bead of sealant (C17) to exposed mating edge surfaces of tail rotor gearbox (8) and tailboom.

g. Connect pitch change control rod (22), see detail A, to antitorque control system. (Refer to paragraph 5-214.)

h. Connect sixth tail rotor driveshaft segment (20) and slip adapter (6). (Refer to paragraph 6-165.)

i. Install tail rotor hub and blade assembly (9). (Refer to paragraph 5-226.)

j. Remove dehydrator (T37). Attach cap (8, figure 6-33) to tail rotor gearbox with pin (9), safety chain (10), and pin (11).

k. Install self-closing valve (13) and chip detector (15). (Refer to paragraph 6-221.)

l. Rig antitorque control system. (Refer to paragraph 11-101.)

m. Service tail rotor gearbox (8) to correct level. (Refer to paragraph 1-11.)

n. Install vertical fin. (Refer to paragraph 2-269.)

o. If a new or overhauled tail rotor gearbox (8) has been installed, perform run-in checks and inspection in accordance with paragraph 6-206.

6-206. OPERATIONAL CHECK — TAIL ROTOR GEARBOX.

NOTE

Perform this operational check after each tail rotor gearbox installation.

a. Perform ground run-in cycle for **20** minutes.

b. After shutdown accomplish the following requirements:

(1) Remove and inspect electric chip detector for metal particles. If metal particles are found investigate to determine cause. (Refer to table 6-1.)

(2) Visually inspect oil at sight gate for discoloration and contamination.

(3) Inspect tail rotor gearbox for oil leaks.

6-207. REPLACEMENT — TAIL ROTOR GEARBOX OUTPUT SEAL.

6-208. REMOVAL — TAIL ROTOR GEARBOX OUTPUT SEAL.

a. Remove rail rotor hub and blade assembly. (Refer to paragraph 5-229.)

b. Drain lubricating oil from tail rotor gearbox. (Refer to paragraph 1-11.)

c. Remove nuts (9, figure 6-34) and thin steel washers (10) and aluminum washers (11) from studs on gearbox case (1). Remove cap assembly (6) from gearbox case (1) and output shaft (2).

d. Remove and discard packing (5) and press seal (8) from cap assembly (6). It is not necessary to remove retaining ring (3) and bearing (4) unless interference may result when pressing out seal (8). If bearing (4) must be removed, replace cap assembly (6).

6-209. INSPECTION AND REPAIR — TAIL ROTOR GEARBOX OUTPUT SEAL.

a. Inspect all visible parts of output shaft (2, figure 6-34) and attaching gear for damage.

b. Inspect sleeve (7) on output shaft (2) for wear in area contacted by seal (8). If sleeve has groove greater than **0.002** inch tail gearbox (8, figure 6-36) must be replaced. Also, if nicks, dents, or scratches are present, or evidence of oil leakage is noted, tail rotor gearbox (8) must be replaced.

c. Inspect gearbox case (1, figure 6-34) and cap assembly (6) for wear, damage, and corrosion. If studs are loose or damaged, replace studs in accordance with paragraph 6-215.

d. Inspect bearing (4, figure 6-34) for freedom of movement and flat spots. If bearing is binding or has flat spots replace cap assembly.

6-210. INSTALLATION — TAIL ROTOR GEARBOX OUTPUT SEAL.

a. Apply a film of sealant (C129) to outside diameter of new seal (8, figure 6-34) and mating surface of cap assembly (6). Press seal into cap assembly (6) with lip of seal outboard. (See view A.) Seat seal flush in cap assembly (6). Trim excess sealing compound from seal (8) and cap assembly (6) with a plastic scraper.

b. Install new packing (5) in groove on inboard side of cap assembly (6). Lubricate packing (5) with lubricating oil (C103). Fill cavity between lips of seal (8) with grease (C80).

c. Position cap assembly (6) with seal (8), bearing (4), and retainer ring (3) on output shaft (2). Seat cap assembly (6) to gearbox case (1) using extreme caution not to damage new seal. Secure cap assembly to gearbox case with aluminum washers (11), thin steel washers (10), and nuts (9). Torque must (9) **50 TO 70 INCH-POUNDS.**

d. Apply a bead of adhesive (C10) to outer diameter of mating surface area of gearbox case (1) and cap assembly (6).

e. Service tail rotor gearbox with lubricating oil (C103).

f. Install tail rotor hub and blade assembly. (Refer to paragraph 5-236.)

g. Inspect for oil leaks on first ground runup. (Refer to paragraph 6-201.)

6-211. REPLACEMENT — TAIL ROTOR GEARBOX INPUT SEAL.

6-212. REMOVAL — TAIL ROTOR GEARBOX INPUT SEAL.

a. Drain lubricating oil from tail rotor gearbox.

b. Remove sixth tail rotor driveshaft segment and slip adapter (18, figure 6-34) from tail rotor gearbox. (Refer to paragraph 6-162.)

c. Use two offset screwdrivers and lift two opposite locking tangs of lockwasher (17) and force lockwasher outboard to free it from locknut (16). After lockwasher is freed from nut, slide lockwasher outboard and free from serrations on threads of pinion gear (12). Discard lockwasher.

d. Position spline wrench (T19) on splines of pinion gear (12). Insert a 1/2 inch square drive breaker bar into opening in spline wrench to hole pinion gear while removing locknut (16) with a spanner wrench. If tail rotor gearbox is removed clamp splined wrench in a vise for security when removing locknut (16).

CAUTION

Do not disturb the torque of input shaft nut (14).

e. Drill two small holes in face of seal (15) **180** degrees part and install two self-tapping screws. Using two offset screwdrivers pry seal out of input shaft nut (14) and discard.

6-213. INSPECTION — TAIL ROTOR GEARBOX INPUT SEAL.

a. Inspect all visible parts of pinion gear (12, figure 6-34).

b. Inspect spacer (19) for wear in area of contact with seal (15). If wear is evident through cadmium plating or nicks and scratches are present replace spacer.

c. Inspect spline teeth and threads on pinion gear for damage. Dress spline teeth and threads with fine India stone.

6-214. INSTALLATION — TAIL ROTOR GEARBOX INPUT SEAL.

a. Fill cavity between lips of new seal (15, figure 6-34) and apply a film to outside diameter of spacer (19) with grease (C80).

b. Apply a film of sealant (C129) to outside diameter of new seal (15) and mating surface of input shaft nut (14). Press seal (15) into input shaft nut (14) with lip of seal outboard. (See view A.) Seat seal flush in input shaft nut using extreme caution not to damage seal. Trim excess sealing compound from edge of seal and nut with a plastic scraper.

c. Thread locknut (16) onto pinion gear (12) with tangs outboard. Position spline wrench (T19) on splines of pinion gear (12) with a 1/2-inch square drive breaker bar installed. Hold pinion gear (12) secure with tools and torque locknut (16) **360 TO 400 INCH-POUNDS.**

d. Position a new lockwasher (17) on pinion gear (12) and using a plastic mallet force locking tangs over locknut (16) with two locking tangs locked behind locknut (16).

e. Service tail rotor gearbox with lubricating oil (C103).

f. Install sixth tail rotor driveshaft segment and slip adapter (18). (Refer to paragraph 6-165.)

g. Inspect for oil leaks on first ground runup. (Refer to paragraph 6-201.)

6-215. STUD REPLACEMENT — TAIL ROTOR GEARBOX. (AVIM)

a. Remove tail rotor gearbox. (Refer to paragraph 6-203.)

b. Remove damaged or loose studs (1 and 2, figure 6-37) and dowel pin (3) in case assembly (4) as follows:

NOTE

c. Clean out small vent hole in bottom of stud or dowel pin holes, as required. Apply unreduced zinc chromate primer (C118) to threads of replacement studs or shank of dowel pin and install to the depth as shown in figure 6-37. Torque studs (1 and 2) in accordance with table 6-5.

Table 6-5. Stud Replacement Limits

LOCATION	STUD SIZE	STUD HEIGHT	INCH-POUNDS
Mounting Base (4 Studs)	1/4	0.75	50-95
Output Port	1/4	0.75	50-95
Pitch Change Port (3 Studs)	1/4	0.88	50-95

NOTE

Stud retaining holes must be tapped to a sufficient depth so that no imperfect threads are engaged. Install replacement studs to height shown in table 6-5. Stud driving torque must be within limits shown. If torque is below the low limit torque, replace the stud with proper oversize stud so that torque will be within range (TM 55-1520-228-23P). Undersize and oversize identification is stamped on end of stud. Apply zinc chromate primer (C118) to stud threads which will be in contact with case and install while primer is wet.

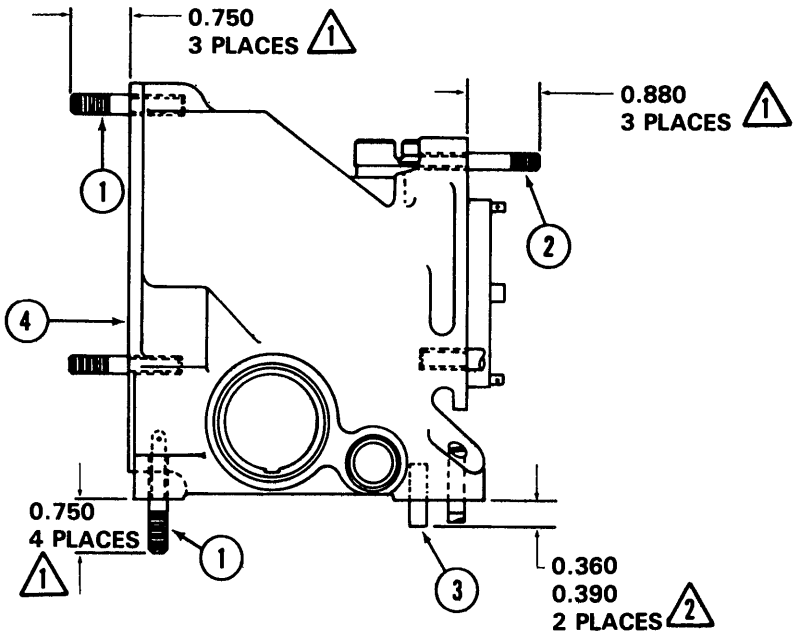

1. Stud AN125999 thru AN126002 oversize AN126003 thru AN126004
2. Stud AN126011 thru AN126014 oversize AN126015 thru AN126016
3. Pin — Dowel NAS607-4-7P oversize NAS607-5-7P
4. Case Assembly

NOTES: 1 Set studs and pin with unreduced primer (C118).

2 Use of oversize dowel pin will require that exposed portion be machined to a diameter of 0.250 inch to match tailboom assembly.

3 All dimensions are in inches.

206040-509

Figure 6-37. Tail Rotor Gearbox Stud Replacement

d. In the event an oversized dowel pin is required for replacement, use NAS607-5-7P dowel pin and machine the length to be exposed (**0.360 to 0.390** inch) to a diameter of **0.025** inch. Rework case assembly dowel pin holes to a diameter of **0.311 to 0.312** inch and a depth of **0.500 to 0.530** inch. Remove drill filings and clean vent holes to ensure they are clear. Clean lower part of case assembly (4) and apply magnesium touchup to reworked areas. (Refer to paragraph 6-216.)

e. Install new machined dowel pin (3). Refer to step c.

6-216. CORROSION REMOVAL AND REPAIR — TAIL ROTOR GEARBOX. (AVIM)

NOTE

Removal of corrosion products is mandatory prior to subsequent repair of corrosion protective treatment.

a. The use of the magnesium touchup treatment is restricted to parts and assemblies that have small areas of the dichromate coating removed by scratches, abrasions, or minor rework. Parts or assemblies that require touchup shall be treated as follows:

WARNING

Degreasing Solvent is combustible and toxic to eyes, skin, and respiratory tract. Wear protective gloves and goggles/face shield. Avoid repeated or prolonged contact. Use only in well-ventilated areas (or use approved respirator as determined by local safety/industrial hygiene personnel). Keep away from open flames or other sources of ignition.

WARNING

Acetone is extremely flammable and toxic to eyes, skin, and respiratory tract. Wear protective gloves and goggles/face shield. Avoid repeated or prolonged contact. Use only in well-ventilated areas (or use approved respirator as determined by local safety/industrial hygiene personnel). Keep away from open flames, sparks, hot surfaces or other sources of ignition.

(1) Remove oil and grease with degreasing solvent (C62) followed by an acetone (C2) wipe.

(2) Masking tape (C143) should be used, as required, to prevent touchup solution from running into areas where it is not needed.

(3) Scrub the area to be treated with fine abrasive pads (C154), or fine aluminum wool (C23). Abrade to clean bare metal. Fresh machined surfaces may be treated without abrading.

(4) Flush areas with cleaning compound (C43) mix 4 ounces per gallon of water, as required, to ensure a waterbreak free surface.

(5) Rinse with clean water and repeat steps (3) and (4) as required, to provide a clean surface.

b. Prepare magnesium touchup treatment solution by mixing 1.3 ounce chromic acid (C39), and 1 ounce calcium sulfate (C32) per gallon of water.

NOTE

The calcium sulfate will not go into solution.

(1) Apply touchup solution with a brush or swab to repaired areas. Allow solution to react for at least 1 minute, reapply solution, as required, to keep the area wet. Excess solution should be clearly marked, dated, and stored at room temperature in a glass jar. Do not store touchup solution where temperatures may vary to extremes, or in contact with direct sunlight. Do not use a touchup solution older than 3 months from date of mixing.

(2) Rinse thoroughly with clean water to remove excess solution. The treatment should produce a brassy colored film; if required, repeat application of touchup solution until a brassy colored film is obtained. Rinse, demask and rinse again to ensure solution removal. All rinsing shall be accomplished using room temperature water.

(3) Dry with filtered compressed air and dry cloths.

(4) Parts that require painting as the next operation shall be painted as soon as practicable, after drying, preferably within **24** hours. Apply one coat of epoxy polyamide primer (C116) to bare areas and top finish with acrylic lacquer (C88).

6-217. CHIP DETECTORS — TAIL ROTOR GEARBOX.

6-218. DESCRIPTION — CHIP DETECTOR ASSEMBLY. One electric chip detector assembly is installed in the tail rotor gearbox. The electric chip detector assembly is made up of one self-closing valve and an electric chip detector.

The electric chip detector consists of a self-locking bayonet probe with a permanent magnet at the end. Free ferrous metal particles in the oil will be attracted to the magnet and when sufficient metal is attracted to complete the circuit between pole and ground, the T/R CHIP DET segment on the caution panel will illuminate.

The self-closing valve automatically closes and prevents loss of oil when the electric chip detector is removed for inspection. The self-closing valve also serves as a drain plug.

6-219. REMOVAL — CHIP DETECTOR ASSEMBLY.

a. Disconnect electrical lead from electric chip detector (15, figure 6-33).

CAUTION

Rough handling of chip detectors and the electrical connector is the major cause of failure and of false indications in the caution light system.

b. Press chip detector (15) in toward tail rotor gearbox (1), turn counterclockwise and remove from self-closing valve (13). Inspect chip detector (15) immediately for metal particles. If any particles are found, place in a clean container and retain until inspection is completed.

c. Inspect self-closing valve (13) for leakage while still installed in tail rotor gearbox (1) but after electric chip detector (15) is removed. If leakage is found, remove self-closing valve (paragraph 6-203).

d. When it is necessary to drain oil from the gearbox for any reason, refer to paragraph 6-203, step 6-203f.

6-220. INSPECTION — CHIP DETECTOR ASSEMBLY.

a. Inspect chip detector (15, figure 6-33) immediately on removal from tail rotor gearbox (1). If any particles are found, make further investigation as outlined in paragraph 6-4 and table 6-2.

b. Remove and discard packings (14).

WARNING

Degreasing Solvent is combustible and toxic to eyes, skin, and respiratory tract. Wear protective gloves and goggles/face shield. Avoid repeated or prolonged contact. Use only in well-ventilated areas (or use approved respirator as determined by local safety/industrial hygiene personnel). Keep away from open flames or other sources of ignition.

c. Clean chip detector (15) and self-closing valve (13) (if removed) with degreasing solvent (C62).

d. Inspect chip detector (15) for stripped or damaged bayonet pins. Inspect self-closing valve (13) for damaged threads.

e. Functional check T/R CHIP DET segment electrical circuit as follows:

(1) Turn BAT switch to BAT. Position CAUTION/RESET/TEST switch to TEST and release. All caution segments should illuminate.

(2) Short across probe on electrical chip detector (15) to tail rotor gearbox case. Observe that T/R CHIP DET segment illuminates.

6-221. INSTALLATION — CHIP DETECTOR ASSEMBLY.

a. Lubricate new packings (12 and 14, figure 6-33) with lubricating oil (C103).

b. Position new packing (12) on self-closing valve (13) and install in tail rotor gearbox (1). Torque self-closing valve **75 TO 125 INCH-POUNDS.** Secure self-closing valve to case of tail rotor gearbox with **0.032** inch lockwire (C96).

c. Position new packing (14) on chip detector (15) and insert into self-closing valve (13). Turn clockwise to lock in place. Attach electrical leads terminal to chip detector (15).

d. Fill the tail rotor gearbox (1) to proper level with lubricating oil (C103). Check for oil leaks on first ground run.

6-222. SIGHT GLASS REPLACEMENT — TAIL ROTOR GEARBOX.

a. Remove retainer ring (16, figure 6-33), packing (17), and sight glass (18).

b. Install new packing (17), sight glass (18), and retainer ring (16).

6-223. CAP ASSEMBLY — TAIL ROTOR GEARBOX.

6-224. REPLACEMENT OF ALUMINUM WOOL — TAIL ROTOR GEARBOX CAP ASSEMBLY.

a. Remove cap assembly (21, figure 6-33, detail A) from tail rotor gearbox (1) by unlocking pin (11) from gearbox and safety chain (10).

b. Remove retaining ring (2), washer (3), and old aluminum wool (20), from inside plug (4).

WARNING

Degreasing Solvent is combustible and toxic to eyes, skin, and respiratory tract. Wear protective gloves and goggles/face shield. Avoid repeated or prolonged contact. Use only in well-ventilated areas (or use approved respirator as determined by local safety/industrial hygiene personnel). Keep away from open flames or other sources of ignition.

c. Clean cap with degreasing solvent (C62) and inspect all parts for damage which would affect function. Replace faulty parts or entire cap assembly.

d. Install new aluminum wool (20) (C23) in plug (4). The correct amount of aluminum wool is in place when washer (3) can be pressed down toward the wool **0.060** inch from its normal installed position and will spring back to the original position. When correct amount of aluminum wool is in place, install retaining ring (2) to hold washer (3) in place.

SECTION VII. OIL SYSTEM

6-225. TRANSMISSION OIL SYSTEM.

6-226. DESCRIPTION — TRANSMISSION OIL SYSTEM. The transmission lubrication system, (figure 6-38) includes a pump, relief valve, filter, spray jets, and an oil cooler. The pump is a constant volume type driven by the accessory gear. An oil level sight gage is located on the right side of the transmission case. A breather type filler cap and two electrical magnetic chip detectors and drain plugs are incorporated. The transmission also furnishes lubrication for the freewheeling assembly mounted in the engine accessory gear case. A pressure line and a return oil line pass through the forward bulkhead to connect the transmission and freewheeling assembly. A low pressure switch is connected to a warning light on the instrument panel.

6-226.1. TRANSMISSION OIL LEVEL INDICATOR. Refer to Figure 6-40.

6-226.2. DESCRIPTION — TRANSMISSION OIL LEVEL INDICATOR. The transmission oil level indicator is located on the Right side of the transmission case. The oil level indicator consists of a round metal disc with a white epoxy coating on one side of the disc. Holes are drilled around the disc to allow oil to pass through the indicator and thus indicate the level of fluid in the transmission.

The Sight Glass itself is fabricated from an acrylic material. Through time it is possible for the sight glass to become crazed, scratched, or discolored and give an erroneous reading.

6-226.3. INSPECTION — TRANSMISSION OIL LEVEL INDICATOR.

a. Inspect sight glass for condition; replace sight glass if discolored or if it prevents a clear indication of correct oil level.

b. Inspect oil level indicator to assure the epoxy facing material is securely bonded to the disc. Replace the indicator if the facing material is unbonded, or if the facing is discolored.

c. Inspect oil level indicator to assure all the holes in the indicator are free to allow the transmission fluid to pass through the disc.

CAUTION

It is possible for a (unauthorized) rework oil level indicator to trap fluid inside the sight glass and provide a false reading.

d. Whenever servicing the transmission fluid, to include transmission fluid change, verify the transmission oil level indicator is operative (fluid can pass freely through the indicator, both into and out of the assembly).

6-227. TRANSMISSION OIL PUMP.

6-228. DESCRIPTION — TRANSMISSION OIL PUMP. A constant delivery pressure transmission oil pump (61, figure 6-40) is flush mounted on the forward side of the transmission main case and is driven by the accessory bevel gear. The outboard end of the oil pump has an accessory drive pad for mounting the rotor rpm tachometer and, through it, the flight control hydraulic pump.

6-229. INSPECTION — TRANSMISSION OIL PUMP. Inspect oil pump mounting area for oil leaks and hold down nuts for security.

6-230. REMOVAL — TRANSMISSION OIL PUMP.

a. Remove hydraulic pump and tachometer generator as a unit from transmission oil pump flange.

b. Apply heat, using lamp, to transmission case.

c. Pull transmission oil pump (61, figure 6-40) from transmission using flange puller as shown in figure 6-39.

d. Remove packing (62, figure 6-40) from oil pump.

6-231. INSTALLATION — TRANSMISSION OIL PUMP.

a. Install new packing (62, figure 6-40) on oil pump (61).

b. Lubricate packing and spline teeth of pump driveshaft with oil (C103).

c. Apply heat lamp to transmission case.

d. Install oil pump (61).

e. Reinstall hydraulic pump and tachometer generator on transmission oil pump flange.

f. Apply sealing compound (C131) between outer edge of pump flange and mating area on transmission. When sealant is dry, trim excess material with sharpened plastic scraper.

6-232. OIL FILTER HEAD ASSEMBLY.

6-233. DESCRIPTION — OIL FILTER HEAD ASSEMBLY. The transmission is provided with an oil filter head assembly (49, figure 6-40) mounted on the left side of the transmission with an inlet to the assembly through an internal passage sealed with a gasket (56). Provisions are made for incorporation of a filter bypass valve (50), a temperature switch (54), and an oil filter assembly (47).

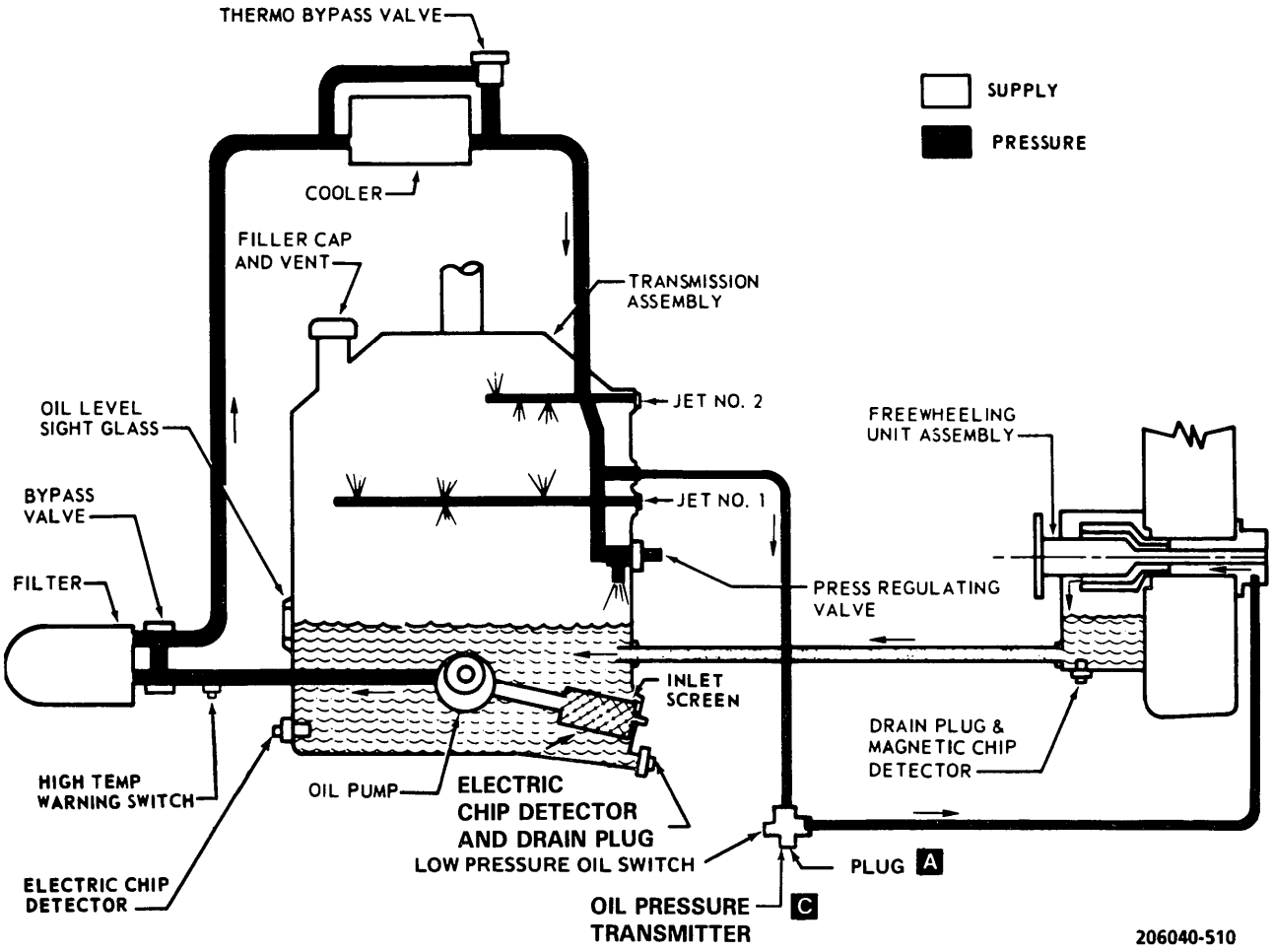

Figure 6-38. Transmission Oil System Schematic

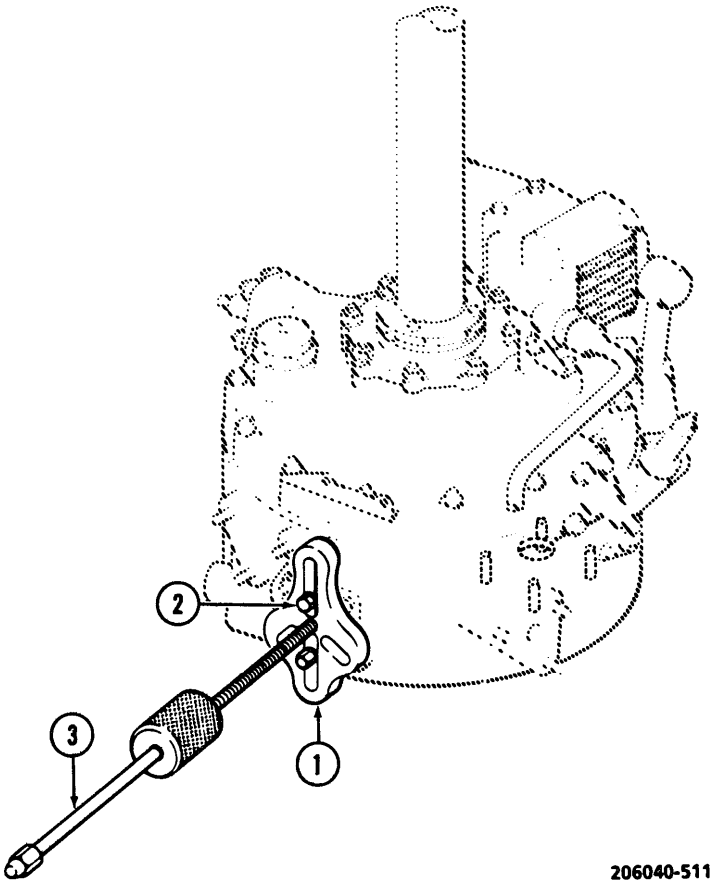

1. Puller
2. Nut
3. Puller, Slide Hammer

Figure 6-39. Flange Puller

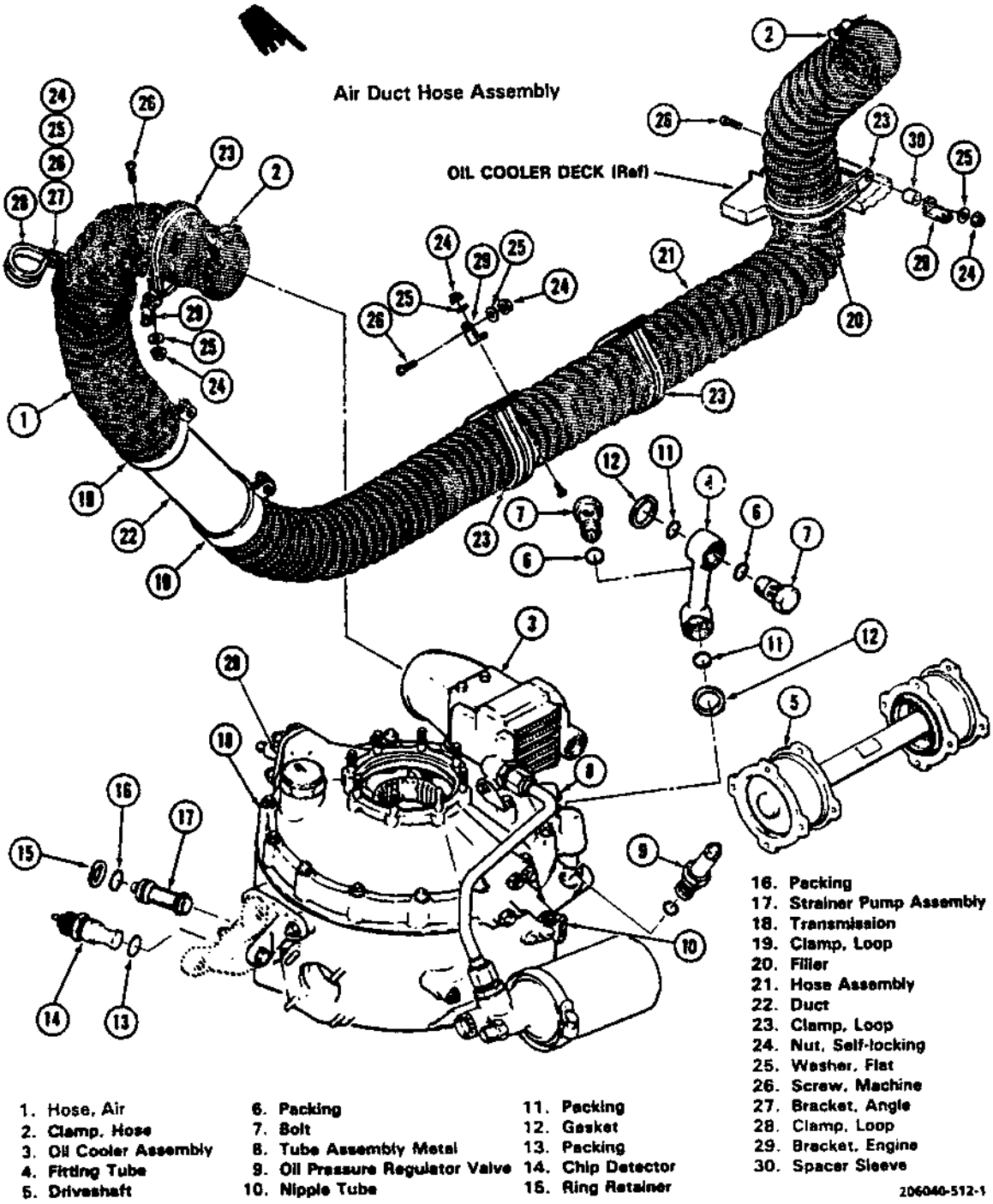

Figure 6-40. Transmission External Components (Sheet 1 of 3)

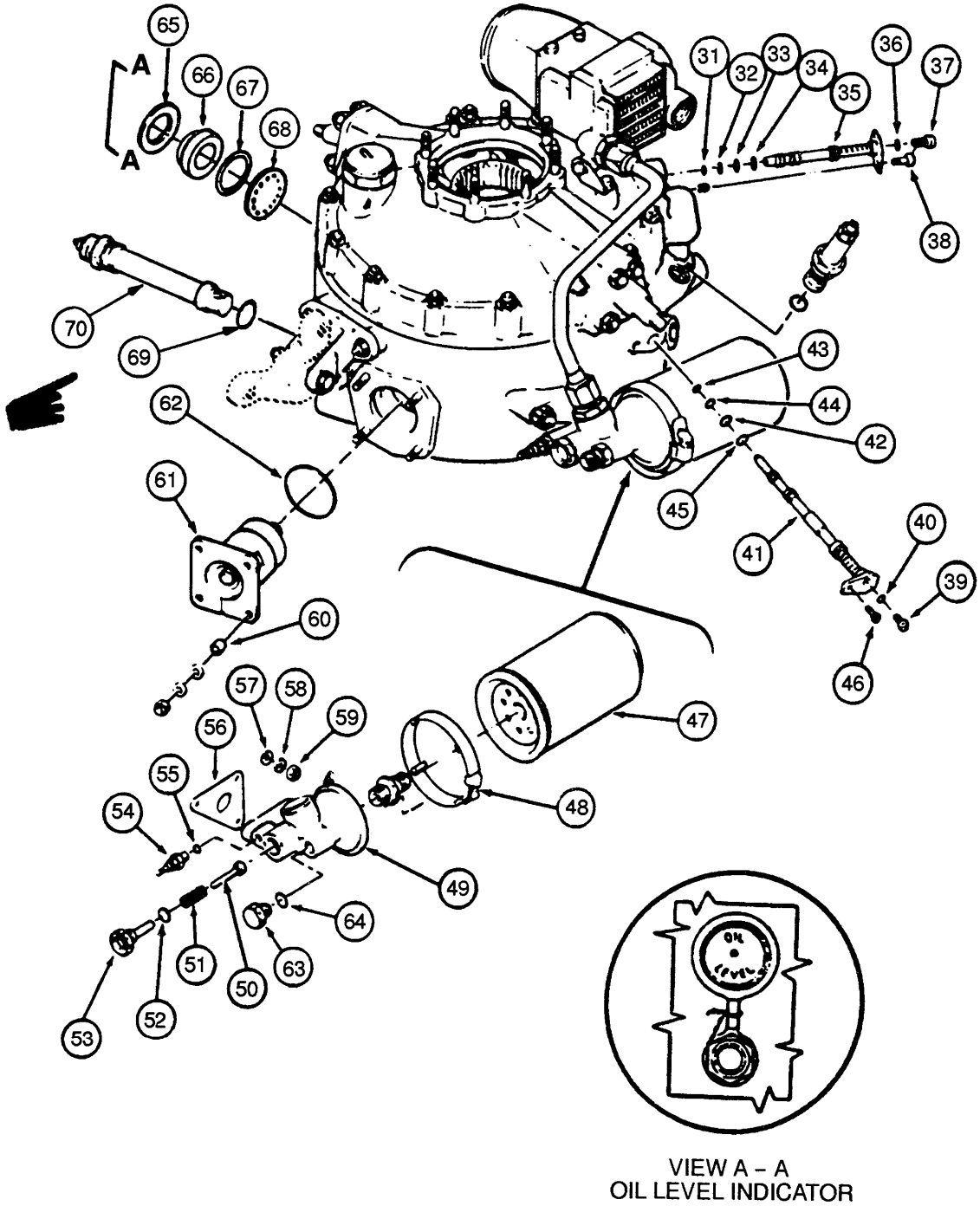

Figure 6-40. Transmission External Components
Figure 6-40. Transmission External Components (Sheet 2 of 3)

31. Packing
32. Packing
33. Packing
34. Packing
35. Nozzle Oil Transmission (No. 2)
36. Packing
37. Screw Machine
38. Screw Machine
39. Screw Machine
40. Packing
41. Nozzle Oil Transmission (No. 1)
42. Packing
43. Packing
44. Packing
45. Packing
46. Screw Machine
47. Filter Assembly
48. Clamp Assembly
49. Head
50. Valve Bypass
51. Spring Bypass Valve
52. Packing
53. Bolt Valve Retainer
54. Switch
55. Packing
56. Gasket Filter Head
57. Washer Flat
58. Washer Flat
59. Nut Self-locking Extended
60. Spacer Sleeve
61. Pump Assembly Lubricating
62. Packing
63. Plug
64. Packing
65. Retainer
66. Glass
67. Packing
68. Indicator
69. Packing
70. Chip detector

Figure 6-40. Transmission External Components (Sheet 3 of 3)

6-234. REMOVAL — OIL FILTER HEAD ASSEMBLY. Remove oil line to the oil cooler and disconnect electrical wiring. Remove three nuts (59) and washers (57 and 58) attaching assembly to transmission case. Remove oil filter head assembly (49).

6-235. INSPECTION — OIL FILTER HEAD ASSEMBLY. Inspect for cracks, damage, and oil leakage after installation.

6-236. INSTALLATION — OIL FILTER HEAD ASSEMBLY. Install new gasket (56) on studs and position oil filter head assembly (49) in place. Secure with nuts (59) and washers (57 and 58) and connect electrical wiring and cooler oil line.

6-237. FILTER BYPASS VALVE.

6-238. DESCRIPTION — FILTER BYPASS VALVE. The filter bypass valve (50, figure 6-40) is mounted in the filter head assembly and bypasses the filter during high oil pressure operation.

6-239. REMOVAL — FILTER BYPASS VALVE. Loosen valve retainer bolt (53, figure 6-40) and remove bolt (53), packing (52), valve spring (51), and valve (50) from filter head assembly (49).

6-240. INSPECTION — FILTER BYPASS VALVE. Visually inspect valve (50, figure 6-40) for evidence of wear and damage. Inspect spring (51) for free length of **2.780** inches.

6-241. INSTALLATION — FILTER BYPASS VALVE. Position packing (52, figure 6-40) on retainer bolt (53). Insert valve (50) and spring (51) in filter head assembly (49). Install retainer bolt (53).

6-242. TRANSMISSION OIL PRESSURE TRANSMITTER. C Refer to paragraph 8-291.

6-243. TRANSMISSION OIL TEMPERATURE SWITCH.

6-244. DESCRIPTION — TRANSMISSION OIL TEMPERATURE SWITCH. The transmission oil temperature switch (54, figure 6-40) is mounted on the filter head assembly (49) and senses a high temperature of filter inlet oil. This gives an indication in cockpit by lighting a warning light (XMSN OIL HOT) on instrument panel.

6-245. REMOVAL — TRANSMISSION OIL TEMPERATURE SWITCH. Unscrew and remove the transmission oil temperature switch (54) and packing (55) from filter head assembly (49).

6-246. INSPECTION — TRANSMISSION OIL TEMPERATURE SWITCH. Inspect for broken or loose terminal, evidence of leakage and visible damage.

CAUTION

Do not apply more than 6 INCH-POUNDS torque to terminal stud, nor more than 25 INCH-POUNDS torque to hex head of temperature switch.

When performing next step, position thumbscrew of clamp (48) in the vertical position to prevent damage to the transmission deck.

6-247. INSTALLATION — TRANSMISSION OIL TEMPERATURE SWITCH. Install packing (55, figure 6-40) on temperature switch (54), insert switch in filter head assembly and tighten.

6-248. FILTER.

6-249. DESCRIPTION — FILTER. The filter assembly (47, figure 6-40) is installed on the oil filter head assembly (49) by screwing on and clamping in place.

6-250. REMOVAL — FILTER. Remove clamp (48, figure 6-40) around filter seat and turn filter cartridge from filter head assembly.

6-251. INSPECTION — FILTER. No inspection required. Inspect clamp for serviceability and obvious damage.

6-252. INSTALLATION — FILTER. Wipe light film of oil (C103) on seal of new filter, screw filter (47, figure 6-40) into place, hand tight, and safety with clamp (48). Tighten clamp by thumbscrew until clamp will not rotate. Safety wire on thumbscrew is not essential.

6-252.1. 3-MICRON OIL FILTER (AFTER COMPLIANCE WITH MWO 1-1520-228-50-51).

6-252.2. DESCRIPTION — 3-MICRON TRANSMISSION EXTERNAL OIL FILTER (After compliance with MWO 1-1520-228-50-51, reference figure 6-40.1 and 6-40.2). The external oil filter is installed on the left side of the flight control servos mounted on the roof. The in-line oil filter consists of a 3-micron filter element, oil bypass indicator and bypass valve. When the filter element becomes clogged, it will give a warning by extending the oil bypass (red) indicator. The indicator extends when a set differential pressure across the filter is exceeded. When in the reset position, the indicator will be hidden from view.

Premaintenance Requirements for 3-Micron Transmission External Oil Filter

Condition	Requirements
Model	OH-58A/C
Part No. or Serial No.	All
Special Tools	None
Test Equipment	None
Support Equipment	None
Minimum Personnel Required	One
Consumable Materials	(62) (C96) (C103) (C119.1)
Special Environmental	Clean, Dust Free Area

6-252.3. INSPECTION — 3-MICRON FILTER.

a. Check for extended oil bypass (red) indicator. If indicator is extended, it can be reset by pressing in.

b. If filter bypass indicator (red button) is showing, reset indicator, ground run transmission and reinspect. If indicator is not showing after ground run, the aircraft may be released for operation. If indicator is showing after ground run, change transmission oil and replace filter element.

c. If filter bypass indicator is showing on any two consecutive preflight inspections, change transmission oil and replace filter elements.

CAUTION

Protective covers shall be used to cover all open ports and lines to prevent contamination by entry of foreign material.

6-252.4. REMOVAL — MICRON OIL FILTER ELEMENT.

a. Remove the transmission cowling. Place suitable container under the filter element bowl, cut lockwire, and remove filter bowl (1) from filter head (2) (figure 6-40.2).

b. Remove filter element (3) from filter head (2). Discard filter element (3).

c. Remove packing (4) from filter bowl (1). Discard packing (4).

WARNING

Degreasing Solvent is combustible and toxic to eyes, skin, and respiratory tract. Wear protective gloves and goggles/face shield. Avoid repeated or prolonged contact. Use only in well-ventilated areas (or use approved respirator as determined by local safety/industrial hygiene personnel). Keep away from open flames or other sources of ignition.

d. Clean inside of filter bowl (1) using degreasing solvent (C62) and wiping rags (C119.1).

6-252.5. REPLACE AND INSTALL — 3-MICRON EXTERNAL OIL FILTER.

NOTE

All packings shall be lubricated with lubricating oil (C103).

a. Lubricate packing (5) in new filter element (3) with lubricating oil (C103).

b. Install filter element (3) in filter bowl (1).

c. Lubricate packing (4) with lubricating oil (C103) and install in filter bowl (1).

d. Install filter bowl (1) hand tight into filter head (2). Secure with lockwire.

e. Service transmission to correct oil level.

f. Perform MOC and leak check of filter assembly.

g. Reinstall transmission cowling.

6-252.6. REMOVE — 3-MICRON OIL FILTER ASSEMBLY (FIGURE 6-40.1).

CAUTION

Protective covers shall be used to cover all open ports and lines to prevent contamination by entry of foreign material.

a. Remove the transmission cowling. Place suitable container under oil filter housing.

b. Remove hose (1) from inlet side of filter assembly (2) (figure 6-40.1).

c. Remove hose (3) from outlet side of filter assembly (2).

d. Remove reducer (4) and packing (5) from outlet side of filter assembly (2). Discard packing (5).

e. Remove reducer (6) and packing (7) from inlet side of filter assembly (2). Discard packing (7).

f. Remove filter assembly (2) by removing three bolts (8), three washers (9), and three spacers (10).

6-252.7. INSTALL — 3-MICRON OIL FILTER ASSEMBLY (FIGURE 6-40.1).

NOTE

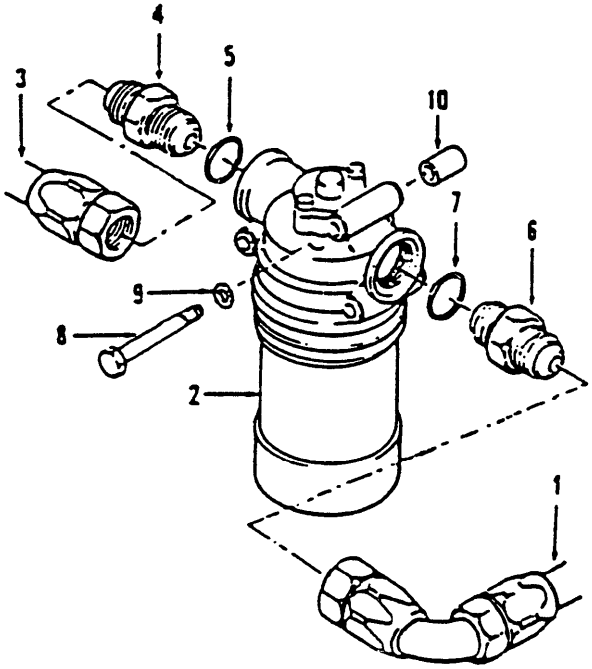

Figure 6-40.1. 3-Micron Oil Filter Assembly

a. Install filter assembly (2) with three bolts (8), three washer (9), and three spacers (10).

b. Install reducer (6) with new packing (7) lubricated with lubricating oil (C103) on inlet side of filter assembly (2).

c. Install reducer (4) with new packing (5) lubricated with lubricating oil (C103) on outlet side of filter assembly (2).

d. Install hose (3) on outlet side of filter assembly (2).

e. Install hose (1) on inlet side of filter assembly (2).

f. Service transmission to correct oil level.

g. Perform MOC and leak check of filter assembly.

h. Reinstall transmission cowling.

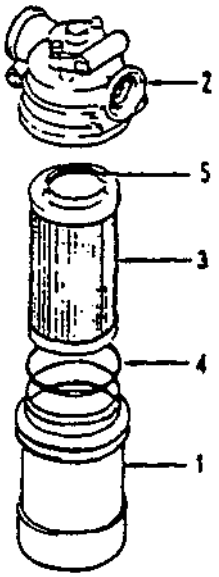

Figure 6-40.2. 3-Micron Oil Filter Element

6-253. OIL COOLER.

6-254. DESCRIPTION — OIL COOLER. The oil cooler (3, figure 6-40) mounts on the transmission top above the input drive quill and has a thermo-bypass valve incorporated to bypass cool oil. Oil is cooled as it flows through the cooler by air which is supplied by a fan and duct arrangement.

6-255. REMOVAL — OIL COOLER. Disconnect oil inlet line. Remove clamp (2, figure 6-40) and air hose (1) from air duct. Remove oil outlet transfer bolt (7) in transfer tube (4). Remove bolts holding cooler to mount brackets.

6-256. INSPECTION — OIL COOLER. Inspect oil cooler (3, figure 6-40) for oil leakage in core, cracks, and security.

6-257. INSTALLATION — OIL COOLER. Position oil cooler (3, figure 6-40) on mount brackets and install bolts securing cooler to brackets. Connect oil inlet line and outlet transfer bolt (7).

6-258. AIR DUCT HOSE ASSEMBLY.

6-259. DESCRIPTION — AIR DUCT HOSE ASSEMBLY. The air duct hose assembly (reference figure 6-40) conveys cooling air forward to the transmission oil cooler (3) from the cooling fan mounted on the upper structure, aft of the aft firewall and driven by the tail rotor driveshaft.

6-260. INSPECTION — AIR DUCT HOSE ASSEMBLY. Inspect duct assembly for tears, cuts, fraying, collapse, and security of mounting.

6-261. REMOVAL — AIR DUCT HOSE ASSEMBLY. Refer to paragraph 6-255.

6-262. REPAIR — AIR DUCT HOSE ASSEMBLY. Repair is limited to removal and replacement of authorized parts as outlined in TM 55-1520-228-23P.

6-263. INSTALLATION — AIR DUCT HOSE ASSEMBLY.

a. Connect air hose (1, figure 6-40) and clamps (2 and 19) on air inlet duct and aft cabin roof duct (22).

b. On upper end of air hose (1) below air inlet duct, install clamp (23) with attaching hardware to existing bracket (29) on main rotor transmission.

c. Attach supporting clamps (23 and 28) as follows:

(1) At approximately nine inches from upper end of air hose (1) position one clamp (23).

(2) On right leg of pylon support link (11, figure 2-55) position one clamp (28, figure 6-40).

(3) Secure clamps (23 and 28) together with attaching hardware.

NOTE

Before tightening, position clamps to prevent chafing of air hose on bulkhead support of transmission cowling.

d. Gain access to aft electrical shelf area and connect hose assembly (21) to aft cabin roof duct (22) with clamp (19).

e. Position two clamps (23) on air hose (21) and secure to frame assembly with attaching hardware.

f. Install filler (20) in oil cooler deck.

g. Insert air hose (21) up through cooler deck and attach to oil cooler blower with hose clamp (2).

h. Install clamp (23) on air hose (21) at oil cooler deck with attaching hardware.

i. Apply sealing compound (C130) to air hose (21) at oil cooler deck.

6-264. OIL TRANSFER TUBE.

6-265. DESCRIPTION — OIL TRANSFER TUBE. The transfer tube (4, figure 6-40) carries oil from the oil cooler to the transmission top case,

6-266. REMOVAL — OIL TRANSFER TUBE. Remove bolts (7, figure 6-40), packing (6), gasket (12), and oil transfer tube (4).

WARNING

Degreasing Solvent is combustible and toxic to eyes, skin, and respiratory tract. Wear protective gloves and goggles/face shield. Avoid repeated or prolonged contact. Use only in well-ventilated areas (or use approved respirator as determined by local safety/industrial hygiene personnel). Keep away from open flames or other sources of ignition.

6-267. CLEANING — OIL TRANSFER TUBE. Clean all parts with degreasing solvent (C62). Dry with clean dry filtered air. Ensure openings are clear.

6-268. INSPECTION — OIL TRANSFER TUBE.

a. Inspect for cracks and holes in walls of tube. None are permitted.

b. Inspect for scratches and pitting on sealing surfaces. None are permitted.

c. Inspect tube for restrictions.

6-269. REPAIR — OIL TRANSFER TUBE. No repair authorized, except for treatment of magnesium surface in accordance with procedures outlined in TM 1-1500-204-23, and painting with epoxy polyamide primer (C116).

6-270. INSTALLATION — OIL TRANSFER TUBE.

a. Install new packing (6, figure 6-40) on bolt (7).

b. Insert bolt (7) through oil transfer tube (4).

c. Install new packing (11) on bolt (7).

d. Install new gasket (12) on bolt (7).

e. Position tube and install bolts (7). Torque bolts **100 TO 200 INCH-POUNDS** and lockwire (C96).

6-271. PRESSURE REGULATOR VALVE.

6-272. DESCRIPTION — PRESSURE REGULATOR VALVE. The oil pressure regulator valve (9, figure 6-40) is mounted on the left, aft side, of the transmission case and limits the system oil pressure by relieving excess oil back into the transmission case. The oil pressure regulator is located below the oil cooler.

NOTE

Do not loosen jamnut or turn external pressure adjusting screw.

6-273. ADJUSTMENT — PRESSURE REGULATOR VALVE.

a. Remove plug (3, figure 6-41) **A** or transducer (5) **C** and connect pressure gage (T6), **0-100** psi range using **0.250** inch flexible hose to cross boss fitting.

CAUTION

Do not use helicopter transmission oil pressure gage to check pressure regulator. An inaccurate pressure adjustment will result at reading between 40 to 60 psi on the transmission oil pressure gage.

b. Run up helicopter to warm lubricating oil. Do not attempt adjustment of valve until oil is hot or unless pressure is below **30** psi when at full rpm.

c. Check pressure to range of **40 to 60** psi when at **103%** rpm **A** or **100%** rpm **C** with hot oil. If not within this range, adjust to **45 to 55** psi. Back off adjusting screw jamnut; increase pressure by clockwise rotation of the adjusting screw. Tighten jamnut, check pressure range and shut down engine.

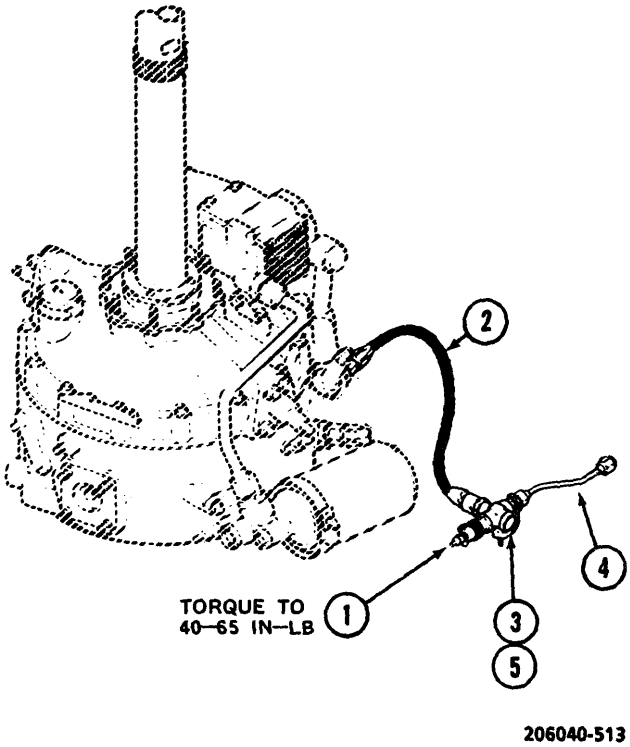

1. Low Pressure Sensing Switch
2. Oil Flex Hose
3. Plug A
4. Oil Tubing
5. Transducer C

Figure 6-41. Pressure Sensing Switch Installation

d. Remove test gage, install plug (3) A or transducer (5) C and safety with lockwire. Torque plug to **40 TO 65 INCH-POUNDS**.

6-274. REMOVAL — PRESSURE REGULATOR VALVE. Remove lockwire. Use wrench on hexagonal shoulder of valve body to loosen and remove valve assembly with packings.

6-275. INSPECTION — PRESSURE REGULATOR VALVE. Inspect valve for scored areas, and damaged threads. Using a nonmetallic blunt rod, check piston for freedom of movement by pushing it into the body several times.

6-276. INSTALLATION — PRESSURE REGULATOR VALVE.

a. Lubricate threads and packing with oil, and place new packing on valve.

b. Install body in case.

c. Check oil pressure in operation. If a new valve assembly is being installed or incorrect adjustment of the valve is suspected, check pressure setting. Refer to paragraph 6-273.

6-277. LOW PRESSURE SENSING SWITCH.

6-278. DESCRIPTION — LOW PRESSURE SENSING SWITCH. The transmission oil low pressure sensing switch (1, figure 6-41) is mounted on the cabin roof and completes the electrical circuit to light the XMSN OIL PRESS warning light when transmission oil pressure drops below **30** psi.

6-279. REMOVAL — LOW PRESSURE SENSING SWITCH. Disconnect electrical lead, remove screw, clamp, spacer, and washer that attaches switch (1) to cabin roof and turn switch from cross fitting. Discard packing.

6-280. INSTALLATION — LOW PRESSURE SENSING SWITCH. Install new packing on switch (1) and install switch in cross fitting. Torque switch **40 TO 65 INCH-POUNDS** and lockwire (C96). Place clamp on switch and attach to cabin roof with a washer, spacer, and screw. Connect electrical lead to switch.

6-281. OIL NOZZLES (JETS).

6-282. DESCRIPTION — OIL NOZZLES (JETS.) Two oil jet assemblies are installed on the left side of the transmission main case and top case. These jets carry oil under pressure from internal oil supply passages, to deliver aimed sprays of oil on gears and bearing. Spacing of retaining screw holes prevents installation in wrong hole. Attaching screw hole indexes the jet nozzle spray direction. Refer to figure 6-40.

6-283. REMOVAL — OIL NOZZLES (JETS).

a. Cut lockwire between two screw heads on jet. Remove only the one screw which secures mounting plate of jet to case.

b. Pull jet tube, with packings, from case. Cover open port to prevent contamination.

WARNING

Degreasing Solvent is combustible and toxic to eyes, skin, and respiratory tract. Wear protective gloves and goggles/face shield. Avoid repeated or prolonged contact. Use only in well-ventilated areas (or use approved respirator as determined by local safety/industrial hygiene personnel). Keep away from open flames or other sources of ignition.

6-284. CLEANING — OIL NOZZLES (JETS). Wash in degreasing solvent (C62) with a suitable brush. Dry with clean dry filtered air, ensuring nozzle openings are clear.

6-285. INSTALLATION — OIL NOZZLES (JETS).

a. Uncover openings, apply light coat of oil (C103) to new packings.

b. Insert jet, align mounting plate and secure to case with screw. Lockwire (C96) screws together.

6-286. CHIP DETECTORS — TRANSMISSION.

6-287. DESCRIPTION — CHIP DETECTORS — TRANSMISSION. The chip detectors (two) are installed in the transmission case. One is adjacent to the oil pump inlet screen on the forward right side of the transmission, this also is the drain for the transmission. The other is a few inches aft. The chip detector is the removable center portion of the chip detector and drain plug assembly. It consists of a self-lock bayonet probe with a permanent magnet at the end. When the magnet attracts sufficient metal to complete the circuit between pole and the ground, the XMSN CHIP DET segment will illuminate on the caution panel. If the drain plug is removed, on installation torque the forward plug **100 TO 175 INCH-POUNDS** and the aft plug **150 TO 250 INCH-POUNDS**. Refer to figure 6-40.

6-288. REMOVAL — CHIP DETECTORS — TRANSMISSION.

a. Disconnect the electrical lead from chip detector stud.

CAUTION

Improper and/or rough handling of chip detectors and the electrical connection is the major cause of failure. Use care in removal, installation, and connection of the terminals to avoid false indications in the caution light system.

b. Press detector in, turn counterclockwise, and remove from plug.

6-289. INSPECTION — CHIP DETECTORS — TRANSMISSION.

a. Inspect chip detector for stripped or damaged bayonet pins.

b. Check for accumulation of metal particles on magnet. Presence of metal may indicate need for further investigation and corrective action. Compare particles found with metal particle identification list. Refer to paragraph 6-4 and table 6-2.

6-290. INSTALLATION — CHIP DETECTORS — TRANSMISSION.

a. Replace packings on chip detector insert.

b. Position insert in plug, push insert in as far as possible, and turn clockwise to lock in place.

c. Connect electrical wire to stud.

6-291. HOSES AND LINES.

Hoses and lines are used to carry oil to and from free-wheeling unit. Check lines and hoses for leaks, chafing, and deterioration. Inspect and replace in accordance with TM 1-1500-204-23.

6-292. STRAINER PUMP ASSEMBLY REMOVAL.

a. Remove retaining ring (15) figure 6-40 from housing.

b. Remove strainer assembly (17).

c. Remove and discard packing (16).

6-293. CLEAN AND INSPECT STRAINER PUMP ASSEMBLY.

a. Inspect screen for accumulation of metal particles on magnet. Presence of metal may indicate need for further investigation and corrective action. Compare particles found with metal particles identification list. Refer to paragraph 6-4 and Table 6-2.

b. Inspect general condition of screen. Replace if damaged.

WARNING

Degreasing Solvent is combustible and toxic to eyes, skin, and respiratory tract. Wear protective gloves and goggles/face shield. Avoid repeated or prolonged contact. Use only in well-ventilated areas (or use approved respirator as determined by local safety/industrial hygiene personnel). Keep away from open flames or other sources of ignition.

c. Flush screen with degreasing solvent (C2).

6-294. INSTALL STRAINER PUMP ASSEMBLY.

a. Install packing (16) on strainer assembly (17).

b. Install strainer assembly (17) into housing.

c. Install retainer ring (15).

CHAPTER 7
HYDRAULIC SYSTEM

7-1. HYDRAULIC SYSTEM.

7-2. GENERAL — HYDRAULIC SYSTEM. This chapter provides information and instructions for maintenance personnel to accomplish maintenance on the hydraulic system. This system includes hydraulic pump, hoses and lines, quick-disconnects, filters, reservoir, actuators and support, check valve, solenoid valve, pressure switch, and relief valve.

WARNING

Prolonged contact with hydraulic fluid (C73), liquid or mist, can irritate eyes and skin. After any prolonged contact with skin, immediately wash contacted area with soap and water. If liquid contacts eyes, flush immediately with clear water. If liquid is swallowed, do not induce vomiting; get immediate medical attention. Wear rubber gloves when handling liquid. If prolonged contact with mist is likely, wear an appropriate respirator. When fluid is decomposed by heating, toxic gases are released.

SECTION I. FLIGHT CONTROL

7-3. FLIGHT CONTROL.

7-4. DESCRIPTION — FLIGHT CONTROL. The flight control hydraulic system (figures 7-1 and 7-2) provides power to operate cyclic and collective power control cylinders. The system includes a variable delivery pump, reservoir, two filters, a relief valve, solenoid valve, pressure switch, directional flow check valve, servo power cylinders, connecting lines, and couplings for a ground test stand. The pump is located on the forward side of the transmission and is driven by the transmission oil pump through the rotor tachometer generator. The reservoir is located on the transmission above the pump. The filler opening is in the top of the reservoir. A scupper and drain line are provided to drain excess fluid overboard. Hydraulic fluid level may be observed through a sight gage in the right side of the reservoir. Pressure and return filters are located on the right side of the system. Both filters have indicator buttons which pop out to indicate an impending filter blockage. Filters and fluid level can be checked through the inspection door on the right side of the forward transmission fairing. A solenoid valve, for turning the system on and off, a pressure switch, and a relief valve are located on the work deck forward of the transmission. A boost ON-OFF switch may be mounted on the instrument panel for pilot control of the solenoid valve. Access to the hydraulic system is gained by removal of the forward transmission fairing.

7-5. OPERATION — FLIGHT CONTROL. System pressure of **575 to 625** psig is produced by the transmission driven pump. Fluid is drawn from the reservoir by the pump. The pump forces fluid through the filter and a normally open solenoid operated system shutoff valve. When the HYD BOOST switch is on, this valve is open and system pressure is supplied to the two cyclic and one collective flight control power cylinders. Each power cylinder assembly includes a servo valve which is mechanically controlled by the flight control linkages. When the linkage moves any servo valve control lever the cylinder moves in the same direction. When the lever is centered, system pressure is applied equally to both sides of the cylinder piston but the system return port is shut off and the cylinder does not move in either direction. Irreversible valves in each power cylinder prevent rotor feedback in the event of hydraulic failure. Each irreversible valve incorporates a check valve to isolate surge pressures produced by rotor feedback in power cylinders from the system pressure lines. A differential relief valve in the servo opens automatically to relieve pressure in excess of

1. Quick-disconnect (Pressure)
2. Quick-disconnect (Return)
3. Filter (Return)
4. Filter (Pressure)
5. Vent Line
6. Reservoir
7. Tachometer Generator
8. Check Valve
9. Hydraulic Pump
10. Case Drain Hose
11. Solenoid Valve
12. Hose (Return)
13. Hose (Return)
14. Hose (Pressure)
15. Hose (Pressure)
16. Hose (Pressure)
17. Hose (Return)
18. Pressure Switch
19. Relief Valve
20. To Servoactuator (Collective)
21. To Servoactuator (Cyclic)
22. Solenoid Valve Tee Fitting
23. Hose Filter (Return)
24. Hose Filter (Pressure)
25. Hose, Pump Inlet

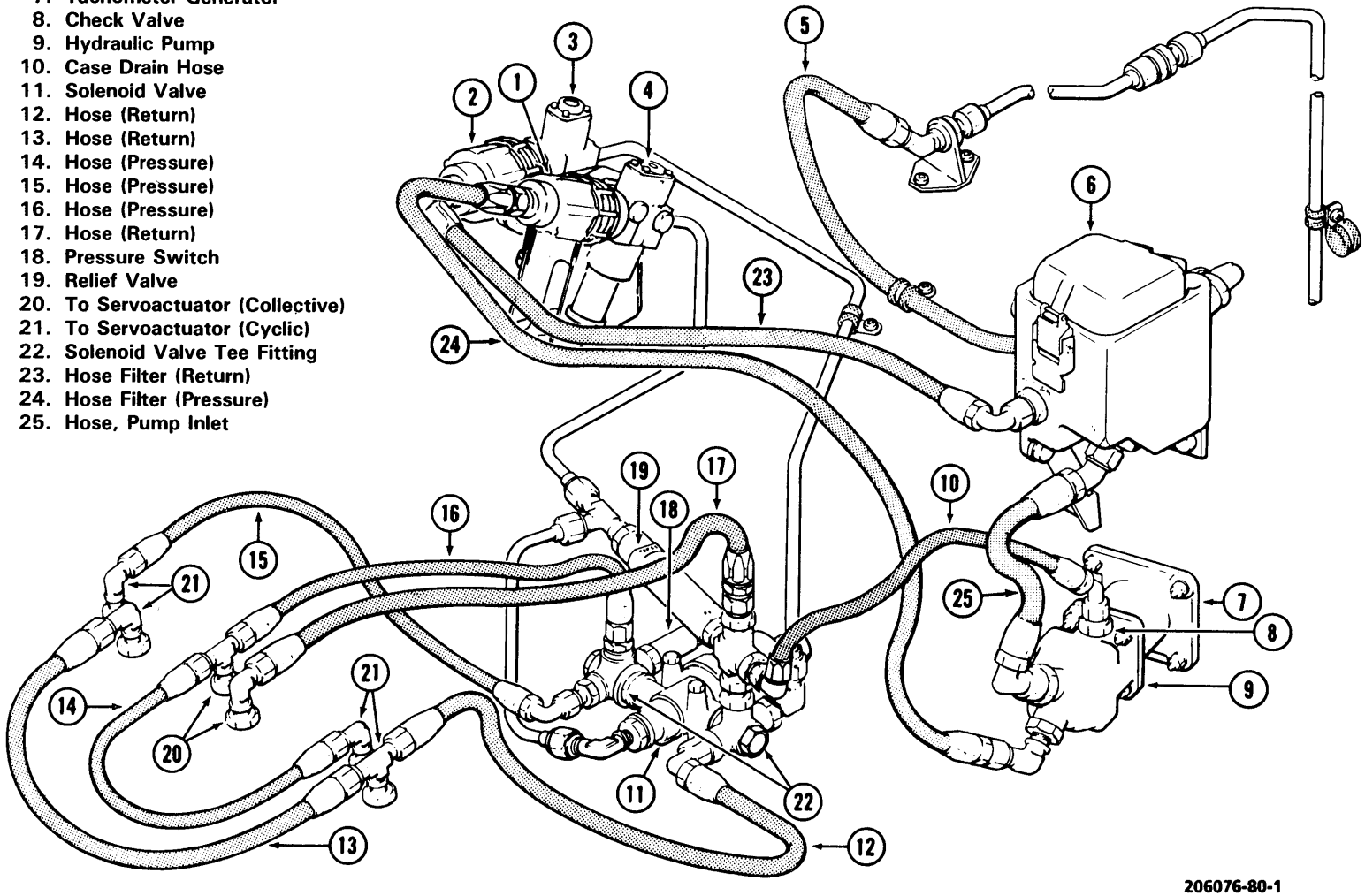

Figure 7-1. Hydraulic System (Sheet 1 of 2)

26. Union
27. Packing, Preformed
28. Baffle
29. Packing, Preformed
30. Plug Machine Thread
31. Packing, Preformed
32. Nut, Lock Tube FTG
33. Retainer Packing
34. Elbow Tube
35. Sight Plug
36. Screen Assembly
37. Pin, Cotter
38. Washer, Nonmetalic
39. Pin, Special
40. Gasket
41. Strainer, Reservoir
42. Cover, Reservoir
43. Housing, Reservoir

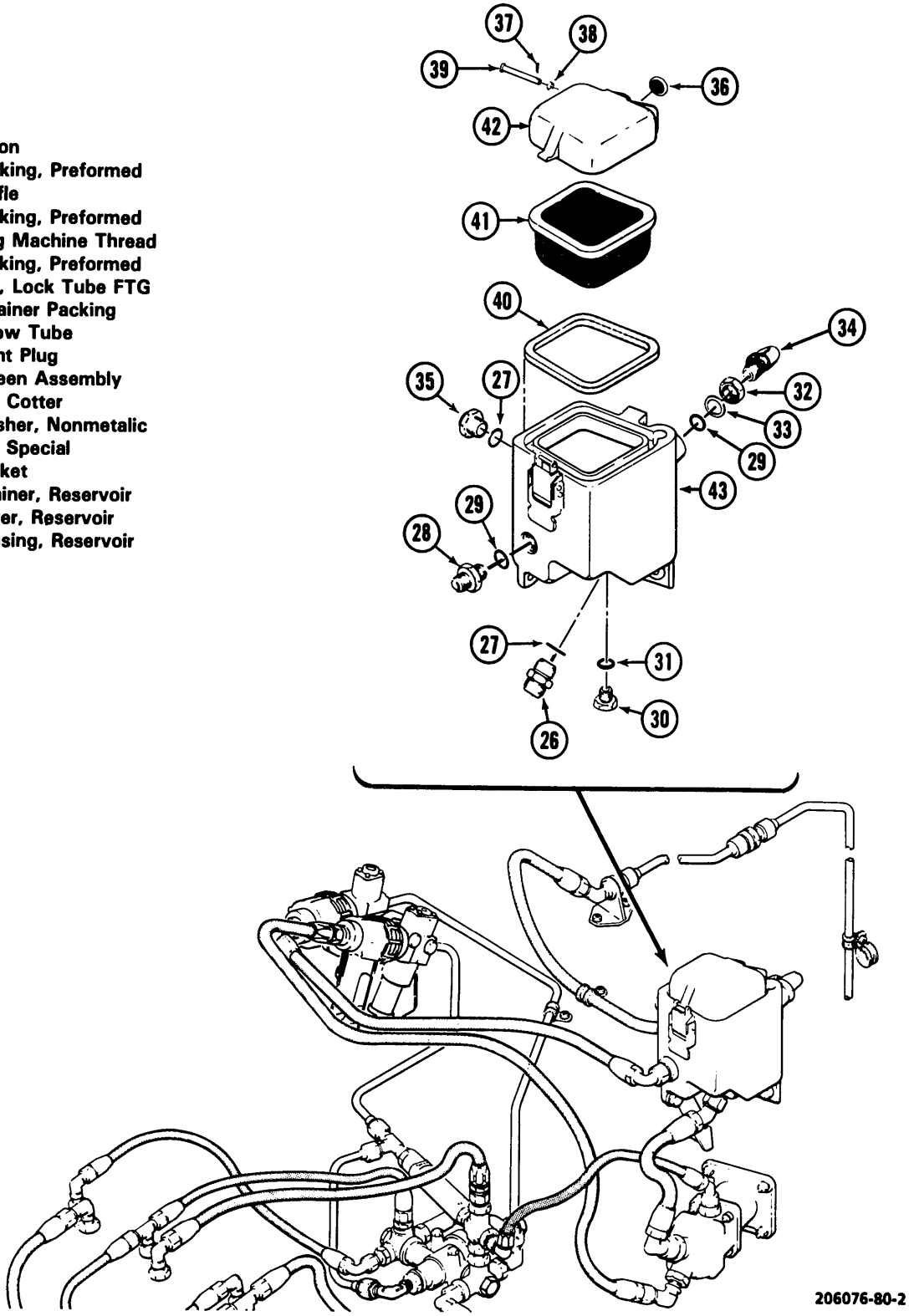

Figure 7-1. Hydraulic System (Sheet 2 of 2)

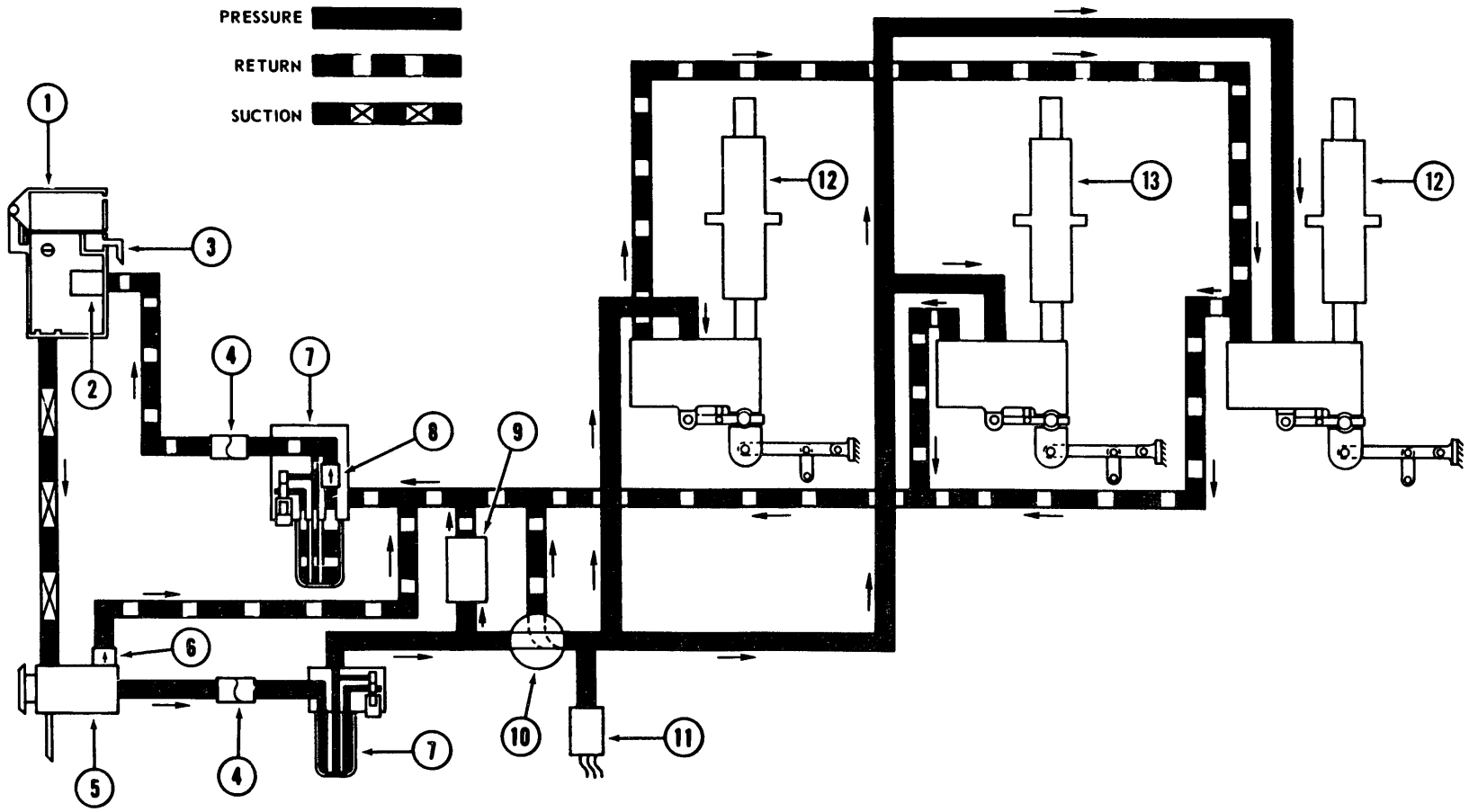

1. Reservoir
2. Baffle
3. Scupper Drain
4. Quick-disconnects
5. Pump
6. Check Valve
7. Filter
8. Filter Bypass Valve
9. Relief Valve
10. Solenoid Valve
11. Pressure Switch
12. Servoactuator, Cyclic
13. Servoactuator, Collective

Figure 7-2. Hydraulic System Schematic

670 to 770 psi. When no system pressure is available and the power cylinders are operated manually, fluid flows from one side of the piston directly through the servo valve and check valve to the other side of the piston. The hydraulic pump is driven by the transmission, therefore, hydraulic boost is provided during autorotation.

7-6. TROUBLESHOOTING — HYDRAULIC SYSTEM. Indications, probable cause, and corrective action for trouble in the hydraulic systems are contained in table 7-1.

NOTE

Before using table 7-1, ensure all normal operational checks have been performed. If a malfunction exists which is not listed in table 7-1, notify the next higher level of maintenance.

Table 7-1. Troubleshooting — Hydraulic System

CONDITION

TEST OR INSPECTION

CORRECTIVE ACTION

1. HYD PRESS caution segment reported being illuminated during normal operation.

STEP 1. Loss of fluid and pressure by leakage.

Locate and repair leaks; replace faulty lines, hoses, seals, or other parts. Refer to paragraph 7-67. Service system as required. Refer to paragraph 1-12.

STEP 2. Other malfunction in system.

Perform operational check with (S3) hydraulic test stand. Refer to paragraph 7-7.

STEP 3. If HYD PRESS caution segment does not illuminate and system operates normally with hydraulic test stand, trouble may be in pump circuit or defective pump.

Replace pump. Refer to paragraph 7-9.

STEP 4. Pump pressure line restricted.

Replace or correct installation of parts. Refer to paragraph 7-9.

STEP 5. System actuators operate normally on (S3) hydraulic test stand, but caution segment is illuminated. Warning circuit or pressure switch may be faulty.

Replace pressure switch. Refer to paragraph 7-48.

STEP 6. Electric circuit malfunction.

Check and repair electrical circuit.

STEP 7. System solenoid valve staying at OFF position or faulty HYD BOOST switch.

Replace solenoid valve, repair electrical circuit, or replace switch. Refer to paragraph 7-20.

Table 7-1. Troubleshooting — Hydraulic System — Continued

CONDITION

TEST OR INSPECTION

CORRECTIVE ACTION

STEP 8. System relief valve staying open or relieving at too low pressure.

Replace relief valve. Refer to paragraph 7-79.

STEP 9. Internal leakage through a unit.

Isolate and replace defective unit.

2. HYD PRESS segment in caution panel fails to illuminate.

STEP 1. Caution panel lamp or panel segment failed.

Replace lamp or panel.

STEP 2. Pressure switch or wiring faulty.

Replace pressure switch or repair electrical circuit. Refer to paragraph 7-48.

STEP 3. System solenoid or electrical circuit faulty.

Replace solenoid valve or repair electrical circuit. Refer to paragraph 7-20.

STEP 4. Faulty HYD BOOST switch.

Replace switch.

3. Servo cylinders chatter when controls are moved.

STEP 1. Air in system.

Cycle controls at least 10 full strokes at normal operating pressure to work out air. Refer to paragraph 7-7.

4. Controls do not operate smoothly.

STEP 1. Incorrect bolts inserted.

Check valve linkage bolts. Insert correct bolts.

5. Excessive feedback in operation of controls.

STEP 1. Air in servo cylinders.

Cycle controls at least 10 times to work out air. Refer to paragraph 7-7.

7-7. TESTING HYDRAULIC SYSTEM WITH HYDRAULIC TEST STAND (S3).

Premaintenance Requirements for Cleaning and Flushing of Hydraulic System

Condition	Requirements
Model	OH-58A/C
Part No. or Serial No.	All
Special Tools	None
Test Equipment	Eddy Current Inspection Unit
Minimum Personnel Required	Two
Consumable Materials	(C62), (C73), (C96), (C104)
Special Environmental Conditions	Dust free, well ventilated area
Reference	TM 1-1520-254-23

A portable hydraulic test stand can be used to provide pressure to test or bleed the hydraulic system without operation of the helicopter engine. Prior to use, the test stand shall be thoroughly cleaned and serviced with hydraulic fluid (C73). The stand shall be equipped with a 10-micron filter and a calibrated pressure gage with a capacity of **1000** psig. The stand shall be capable of producing pressure to **1000** psig and shall have a minimum flow rate of **two** gallons per minute at **1000** psig. Refer to TB 55-1500-334-25.

a. Prepare for test as follows:

NOTE

A complete visual inspection of the hydraulic system shall be accomplished before the functional test is performed to ensure that all components and lines are attached, secure, and appear capable of satisfactory operation.

(1) Position ground test stand on right side of helicopter by engine compartment.

(2) Remove forward transmission fairing. (Refer to paragraph 2-39 **A** or 2-40 **C**.) Remove bases at quick-disconnects (1 and 2, figure 7-1).

(3) Cap ends of removed hoses to prevent entrance of foreign matter.

(4) Connect test stand hoses.

(5) Apply electrical power to helicopter.

(6) Position HYD BOOST switch on.

b. Clean and flush hydraulic system as follows:

NOTE

For pump failure, the pressure line filter will trap all particles. When replacing failed pump flush pressure line to filter and replace filter element.

(1) Drain hydraulic reservoir.

WARNING

Degreasing Solvent is combustible and toxic to eyes, skin, and respiratory tract. Wear protective gloves and goggles/face shield. Avoid repeated or prolonged contact. Use only in well-ventilated areas (or use approved respirator as determined by local safety/industrial hygiene personnel). Keep away from open flames or other sources of ignition.

(2) Inspect interior of hydraulic reservoir. If reservoir is pitted, or contaminated with sediment, dirt or other foreign matter, clean the following components (figure 7-1) with degreasing solvent (C62) and allow to dry or use dry filtered compressed air at no more than 20 psi.

(a) Reservoir (6)

(b) Pump inlet hose (25)

(c) Pump pressure hose (24)

(d) Return hose from filter (23) to reservoir (6)

(e) Pump case drain hose (10). If a crack is suspected, refer to TM 1-1520-254-23, Technical Manual Aviation Unit Maintenance (AVUM) and Aviation Intermediate Maintenance (AVIM) Manual Nondestructive Inspection Procedures for OH-58 Helicopter Series.

(3) If interior of hydraulic reservoir is not visually contaminated, except for traces of water, the hydraulic reservoir and pump inlet hose may be flushed on the helicopter. Proceed as follows:

(a) Remove traces of water with clean, lint-free cloth.

(b) Disconnect pump inlet hose (25) at pump.

(c) Position end of pump inlet hose in container.

(d) Pour approximately one quart of clean hydraulic fluid (C73) into reservoir and pump inlet hose.

(e) Attach pump inlet hose at pump.

(f) Uncouple quick-disconnect couplings (1 and 2). Disconnect hose (23) at reservoir (6) and hose (24) at pump (9).

WARNING

Degreasing Solvent is combustible and toxic to eyes, skin, and respiratory tract. Wear protective gloves and goggles/face shield. Avoid repeated or prolonged contact. Use only in well-ventilated areas (or use approved respirator as determined by local safety/industrial hygiene personnel). Keep away from open flames or other sources of ignition.

(g) Remove hydraulic reservoir return line coupling and clean baffle with degreasing solvent (C62).

WARNING

Degreasing Solvent is combustible and toxic to eyes, skin, and respiratory tract. Wear protective gloves and goggles/face shield. Avoid repeated or prolonged contact. Use only in well-ventilated areas (or use approved respirator as determined by local safety/industrial hygiene personnel). Keep away from open flames or other sources of ignition.

(h) Remove pump case drain hose (10) and clean with degreasing solvent (C62).

(4) Install pump case drain hose (10). Ensure check valve (8) is installed with arrow in direction illustrated in figure 7-1.

WARNING

Degreasing Solvent is combustible and toxic to eyes, skin, and respiratory tract. Wear protective gloves and goggles/face shield. Avoid repeated or prolonged contact. Use only in well-ventilated areas (or use approved respirator as determined by local safety/industrial hygiene personnel). Keep away from open flames or other sources of ignition.

(5) Remove filter elements, clean filter bowls with degreasing solvent (C62), and reinstall filter bowls without filter elements. Allow filter bowls to air dry or use dry filtered compressed air to remove any solvent residue.

(6) Disconnect hoses (13 and 15) from the right hand servoactuator and connect together, using an AN919-3 reducer.

(7) Disconnect hose (14) from the left hand servoactuator, and hose (17) from the center servoactuator; then connect together using an AN919-3 reducer.

(8) Disconnect hoses (14 and 16) from the center servoactuator and connect together, using an AN815-4 union.

(9) Disconnect hoses (12 and 13) from the left servoactuator and connect together, using an AN818-5 union.

(10) Connect hydraulic test stand (S3) pressure line to quick-disconnect at pressure filter (4).

(11) Connect a hose of sufficient length to the return filter (3) to reach a container overboard for contaminated fluid.

(12) Start test stand and adjust to **100 (±50)** psi.

(13) Circulate hydraulic fluid for approximately one minute, or until fluid runs clean.

(14) Shut down test stand.

(15) Remove hose at return filter (3) and attach test stand return line to quick-disconnect at filter (3).

CAUTION

Do not exceed 625 psi. Excessive pressure may damage system seals.

(16) Start test stand and adjust to **600 (±25)** psi.

(17) Circulate hydraulic fluid for approximately **5** minutes.

(18) Shut down test stand.

NOTE

Refer to TM 1-1500-204-23 for torque requirements.

(19) Remove reducers and unions then attach hoses (12, 13, 14, 15, 16, and 17) to servoactuators as illustrated in figure 7-1.

(20) Disconnect test stand return line at quick-disconnect at return filter (3).

(21) Connect a hose of sufficient length to the return filter (3) to reach a container overboard for contaminated fluid.

CAUTION

Do not exceed 625 psi. Excessive pressure may damage system and servoactuator seals.

(22) Start test stand and adjust to **600 (±25)** psi.

(23) Cycle the collective stick full up to full down **10** times. With collective full down, move the cyclic in a circle **10** times. With collective full up, move the cyclic in a circle **10** times.

(24) Shut down test stand.

(25) Remove test stand connections and install clean hydraulic reservoir if removed, clean filter elements, clean lines, fitting, and baffle. Refer to TM 1-1500-204-23 for torque requirements, and figure 7-1 for proper location of components.

(26) Connect hose (23) at quick-disconnect coupling (2) and reservoir (6).

(27) Connect hose (24) at quick-disconnect coupling (1) and pump (9).

(28) Fill reservoir with clean hydraulic fluid (C73).

c. Bleeding hydraulic system using transmission-driven pump.

(1) Remove transmission fairing. Refer to paragraphs 2-39 **A** or 2-40 **C** .

(2) Ensure hydraulic reservoir is full.

(3) Start and ground run the helicopter.

(4) With main rotor turning at idle speed, cycle the cyclic and collective controls a minimum of **10** times to bleed air from system.

(5) Shut down the engine.

(6) Fill reservoir with hydraulic fluid (C73) and repeat steps (3), (4), and (5) as necessary until all air is out of system.

d. Perform functional test of hydraulic system as follows:

(1) If test stand is not available remove plug at test port of one servoactuator and connect calibrated pressure gage (T5) to hydraulic system. Ground-run aircraft, with engine running at **82 to 85%** of N2; hydraulic pressure should be **600 (±25)** psig without movement of controls.

(2) If test stand is available, connect test stand (S3) at quick-disconnect couplings (1 and 2, figure 7-1) located on right side of helicopter and set test stand (if used) pumps to provide a minimum flow of **1.9** GPM with pressure compensator adjusted to **600 (±25)** psig.

(3) Sequence valve test is not required for servoactuator P/N 206-076-031-15 and subsequent.

(a) Actuate the controls and turn the hydraulic system on and off several times in accordance with TM 55-1520-228-10.

(b) After **15** minutes turn test stand pump off. Disconnect return line hose assembly from the return port of all three cylinder assemblies (figure 7-1). Cap hose assemblies to prevent loss of hydraulic fluid.

(c) Place shop towels or containers as necessary to catch any hydraulic fluid that may drain from the cylinder assembly return ports.

(d) Place cyclic stick in center of travel and apply friction to hold in position.

(e) Actuate the collective control stick through its full travel. While moving the control, check for hydraulic fluid leakage out of return line port of each cylinder.

(f) Continue to test for leakage for **5** minutes. Remove and replace any cylinder assembly which leaks a steady stream of fluid sufficient to rapidly drain the servo head assembly, or which leaks in excess of **6** drops per minute during the last **2** minutes of the test.

(g) Connect the return line hydraulic hose assemblies to their respective cylinder assembly return ports.

(h) Turn test stand pump on.

(4) Clearance: Slowly cycle the cyclic and collective controls to the limit of stroke and observe movement of hydraulic servoactuators. Clearance between all moving parts shall be sufficient to prevent fouling of adjacent parts. Particular attention shall be given to flexible connections to ensure that pinching does not occur and cycling does not loosen attaching fittings.

(5) Check operation of HYD PRESS warning light as follows:

(a) Slowly decrease pressure. Light should illuminate at **300** psig.

(b) Slowly increase test stand pressure to hydraulic system. Light should extinguish at **400** psig.

NOTE

The following check can only be accomplished using a hydraulic test stand.

(6) Check operation of pressure relief valve in hydraulic system. Place the HYD BOOST switch to the OFF position. While operating pressure is slowly increased, place hand on relief valve to determine when it opens. Valve should open between **670 and 770** psig. Valve should reseat at **670** psig. Decrease pressure to **600 (±25)** psig. Place HYD BOOST switch to the ON position.

(7) With system pressure at **600 (±25)** psig to test operation of solenoid valve, place HYD BOOST switch to OFF. HYD PRESS warning light should illuminate. Cycle the cyclic and collective controls. They should require more force to operate if valve closed properly. Position HYD BOOST switch to ON position. The HYD PRESS warning light should extinguish.

(8) Check operation of servoactuators as follows:

(a) Set hydraulic test stand pressure to **ZERO** psig.

(b) Slowly increase hydraulic pressure until it can be determined that the control system is functioning with hydraulic power. Change over from mechanical to hydraulic operation should occur between **100 to 188** psig. Actuate both cyclic and collective controls to determine if this requirement is met on all cylinders.

(c) Reduce pressure to **ZERO** psig.

(d) Check each servoactuator for irreversibility by grasping rod end of power cylinders, and pushing or pulling with approximately **50** pounds of force. Piston rod should not move.

(9) When test is complete, refill and bleed system as necessary. Disconnect hydraulic test stand and connect helicopter hydraulic hose couplings.

7-8. TESTING HYDRAULIC SYSTEM WITH TRANSMISSION-DRIVEN PUMP. When a ground test stand is not available, the transmission driven hydraulic pump can be used to perform operational checks and to bleed the hydraulic system. Operation of the engine shall be performed in accordance with instructions contained in TM 55-1520-228-10. The following check will be accomplished as a MOC anytime maintenance is performed on the hydraulic system.

a. Perform operational check of hydraulic system as follows:

NOTE

Ensure that the hydraulic system has been bled and filled.

(1) Start and ground-run the helicopter.

(2) Increase engine rpm until idle speed is reached. Maintain idle speed for at least **15** minutes.

(3) While speed is maintained, place HYD BOOST switch on and make the following checks.

(a) Observe all hydraulic fittings and components for evidence of external leakage.

(b) Repair or replace components and fittings as necessary to correct leakage.

(c) Slowly cycle the controls to allowable limits for idle speed and observe movement of hydraulic servo cylinders. No fouling should occur.

(d) Check flexible hoses and connections to ensure that pinching of hoses does not occur.

(e) Position HYD BOOST switch to OFF. Solenoid valve should energize and close. HYD PRESS caution light should illuminate and more force should be required to move the controls.

NOTE

The following paragraph is not required for removal and replacement of hydraulic lines.

b. Pressure test hydraulic system as follows:

(1) Remove plug at test port of one servo-actuator and connect a calibrated pressure gage (T5) to hydraulic system. With engine running at **82 to 85**% of N2, hydraulic pressure should be **600 (±25)** psig without movement of controls.

(2) If pressure is out of limits replace pump and repeat step a.

(3) Shut down helicopter, remove gage, and replace plug.

SECTION II. HYDRAULIC PUMP

7-9. HYDRAULIC PUMP.

NOTE

Hydraulic Pump 421210 has two additional ports which are located 90 degrees from the case drain and seal drain ports. As installed, these extra ports are located horizontally on the left and right sides of the pump (9 o'clock and 3 o'clock positions). Field units should install metal plugs AN814-4D with packings MS28778-4 in the extra ports. Lockwire is not required. All other installation, hookup, inspection and test requirements are as stated in existing manuals.

7-10. DESCRIPTION — HYDRAULIC PUMP. The variable-delivery hydraulic pump (9, figure 7-1) is mounted on the rotor tachometer generator, on the forward side of the transmission. It is driven by the transmission through the tachometer generator and has three connections; inlet, pressure outlet, and case drain port. The pump is self-lubricating and has a seepage drain port to allow fluid that may leak past the drive seals to escape.

Premaintenance Requirements for Hydraulic Pump

Condition	Requirements
Model	OH-58A/C
Part No. or Serial No.	All
Special Tools	None
Test Equipment	Eddy Current Inspection Unit
Minimum Personnel Required	Two
Consumable Materials	None
Special Environmental Conditions	None
References	TM 1-1520-254-23

7-11. CLEANING — HYDRAULIC PUMP.

WARNING

Degreasing Solvent is combustible and toxic to eyes, skin, and respiratory tract. Wear protective gloves and goggles/face shield. Avoid repeated or prolonged contact. Use only in well-ventilated areas (or use approved respirator as determined by local safety/industrial hygiene personnel). Keep away from open flames or other sources of ignition.

Clean with degreasing solvent (C62). Dry with moisture-free, compressed air at approximately **20** psi pressure.

7-12. INSPECTION — HYDRAULIC PUMP (INSTALLED).

CAUTION

Check valve, in case drain line, must be installed with arrow pointing away from pump. (Refer to 8, figure 7-1 and 6, figure 7-2). Improper installation (backward) will cause the pump to overheat, and can result in precautionary or forced landings.

a. Inspect hydraulic pump for leakage. Refer to table 7-2.

b. Inspect hydraulic pump for security of installation.

c. Inspect hydraulic pump for cracked housing. If a crack is suspected, refer to TM 1-1520-254-23, Technical Manual Aviation Unit Maintenance (AVUM) and Aviation Intermediate Maintenance (AVIM) Manual Nondestructive Inspection Procedures for OH-58 Helicopter Series.

d. Ensure plugs and screws are properly lockwired. If a crack is suspected, refer to TM 1-1520-254-23, Technical Manual Aviation Unit Maintenance (AVUM) and Aviation Intermediate Maintenance (AVIM) Manual Nondestructive Inspection Procedures for OH-58 Helicopter Series.

e. Inspect connecting lines and hose for security and leakage.

7-13. REMOVAL — HYDRAULIC PUMP.

a. Remove forward transmission fairing. Provide suitable container to catch hydraulic fluid.

b. Drain reservoir.

c. Disconnect three hoses from the pump. Cap or cover ends of hoses and pump fittings.

d. Remove four nuts which secure pump mounting flange to tachometer; pull pump free of drive pad and remove from helicopter.

7-14. INSPECTION — HYDRAULIC PUMP (REMOVED).

a. Inspect for broken shaft and worn spline.

b. Inspect ports and passageways for cleanliness.

c. Inspect ports for cross threading and mutilation.

d. Inspect external driveshaft for cracked or broken teeth. If a crack is suspected, refer to TM 1-1520-254-23, Technical Manual Aviation Unit Maintenance (AVUM) and Aviation Intermediate Maintenance (AVIM) Manual Nondestructive Inspection Procedures for OH-58 Helicopter Series.

e. Inspect data plate for legibility.

f. Rotate pump driveshaft by hand. The shaft must not bind or require more than **16** inch-pounds of torque to rotate.

CAUTION

Contamination is a major cause of wear and pump failure.

g. Install an AN806D6 plug in the inlet and an AN806D8 plug in the discharge port. Using hydraulic test stand (S3) or equivalent, apply fluid to the case drain port at **150** psig for **10** minutes. Not more than **1** drop leakage will be permitted for any joint or seal.

Table 7-2. Maximum Allowable Leakage for In-Service Components

COMPONENT	FUNCTION	TYPE	LEAKAGE RATE
Servo-Actuators	Rod Seal	D	1 drop/flight hour or 1 drop/20 full stroke cycles
	Rod Seal	S-D	1 drop/15 minutes
	End Cap	S	2 drops/day
	Valve Input	D	1 drop/5 cycles
	Valve Input	S-D	1 drop/5 minutes
	Valve Body	S-D	None
	(Weep Holes)	S-D	1 drop/5 minutes
Pump	Output Shaft	D	1 drop/minute
	Output Shaft	S-D	1 drop/minute
	Housing (mating surfaces)	S	2 drops/day
Fittings	Flared or Flareless	S	None
	Compression Seals	S	1 drop/30 minutes

NOTE
D — Dynamic
S — Static
S-D — Static leakage through dynamic seal
See Figure 7-3 for location of functions.

7-15. DISASSEMBLY — HYDRAULIC PUMP. (AVIM)

a. Remove driveshaft and seal as follows:

(1) Hold external driveshaft (1, figure 7-4) and lightly tap housing (25) with a small mallet to remove shaft (1). Discard ring (2) and remove spring (3).

(2) Remove four screws (12), retainer (4), mating face (7), and packings (5 and 6).

(3) Remove nose seal (8), packing (9), flat washer (10), and spring washer (11) from internal driveshaft (not illustrated).

b. Remove rate piston port cap seal by removing plug (13) and packing (14).

CAUTION

Do not remove spring (15) and rate piston (17).

c. Remove stroking piston port seal by removing plug (20) and packing (19).

CAUTION

Do not remove stroking piston (18).

d. Remove trunnion seal by removing eight screws (23) and eight washers (22). Remove two

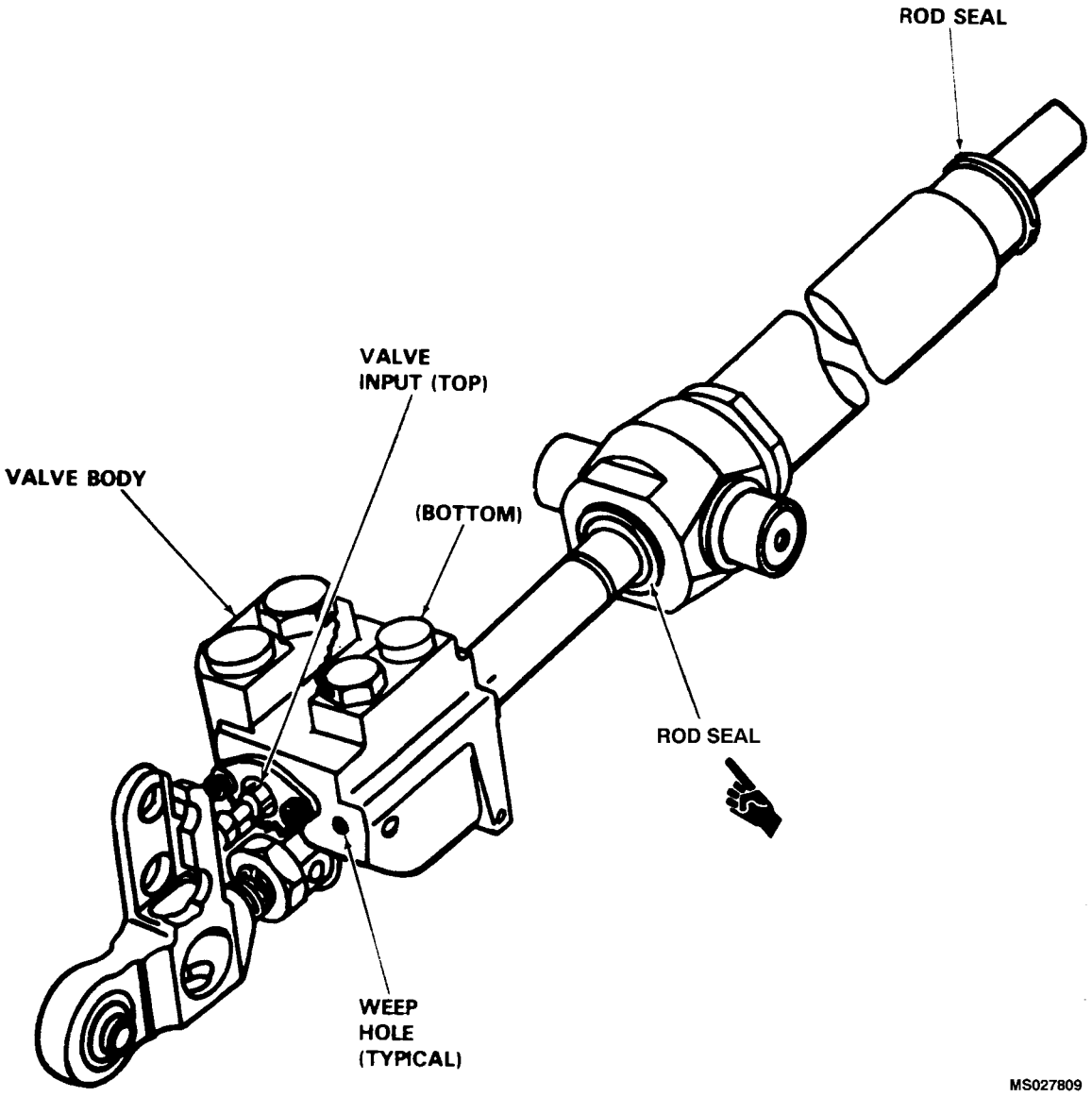

Figure 7-3. Hydraulic System Functions

1. External DriveShaft
2. Ring
3. Spring
4. Retainer
5. Packing
6. Packing
7. Mating Face
8. Nose Seal
9. Packing
10. Flat Washer
11. Spring Washer
12. Screws
13. Plug
14. Packing
15. Spring
16. Spacer
17. Rate Piston
18. Stroking Piston
19. Packing
20. Plug
21. Trunnion Cover
22. Washer
23. Screw
24. Packing
25. Housing
26. Cover

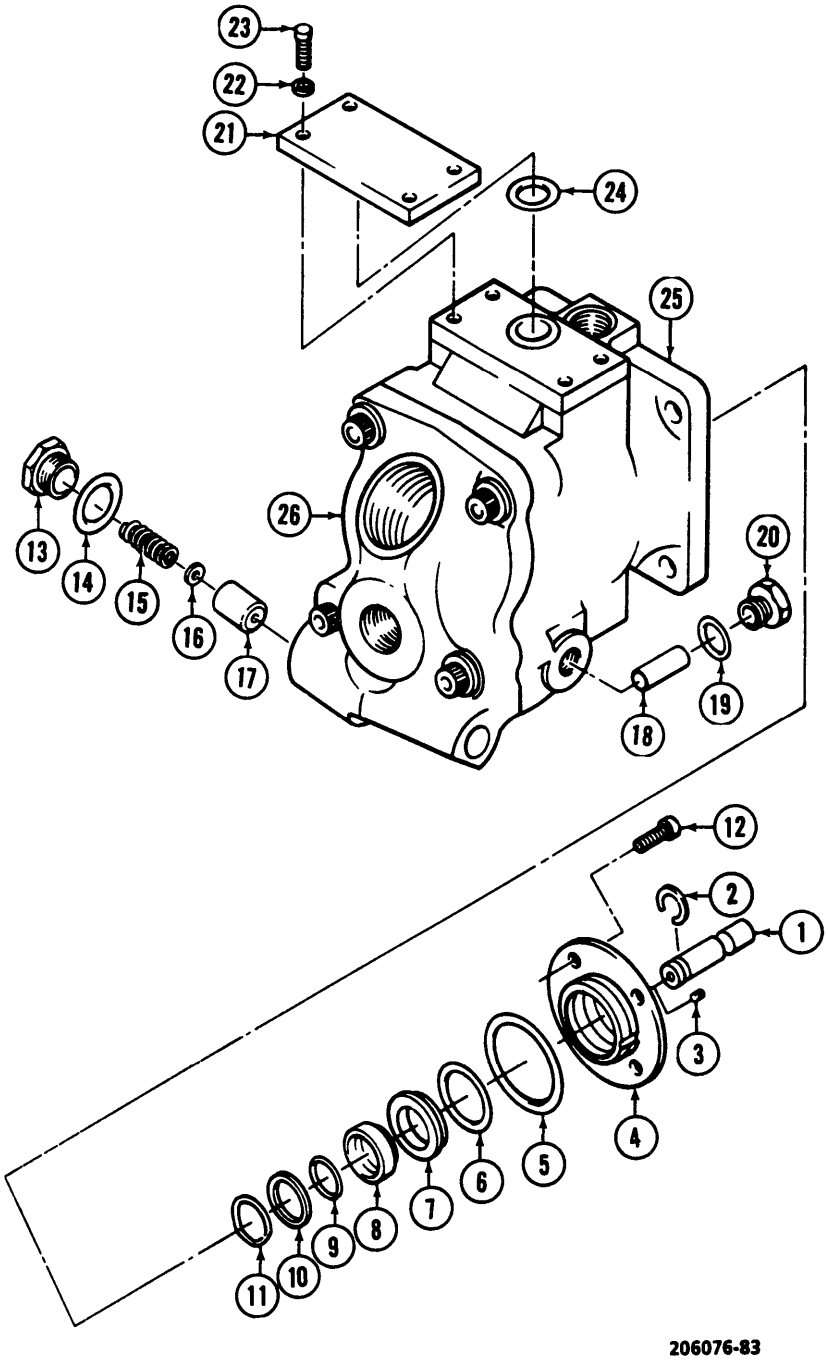

Figure 7-4. Hydraulic Pump

trunnion covers (21) and discard two packings (24). (Identical trunnion cover, etc., on opposite side of pump is not illustrated.)

WARNING

Degreasing Solvent is combustible and toxic to eyes, skin, and respiratory tract. Wear protective gloves and goggles/face shield. Avoid repeated or prolonged contact. Use only in well-ventilated areas (or use approved respirator as determined by local safety/industrial hygiene personnel). Keep away from open flames or other sources of ignition.

7-16. CLEANING AFTER DISASSEMBLY — HYDRAULIC PUMP. (AVIM) Clean all parts removed with degreasing solvent (C62) except seals, which must be discarded.

7-17. REPAIR OR REPLACEMENT — HYDRAULIC PUMP.

CAUTION

Do not adjust hydraulic pump pressure. Pressure is preset by manufacturer. If compensator seal is broken, replace hydraulic pump.

Repair is limited to items covered in reassembly. If pump cannot be repaired by replacement of specified items, pump must be replaced.

7-18. ASSEMBLY — HYDRAULIC PUMP. (AVIM)

a. Assemble driveshaft and seal as follows:

(1) Lubricate parts with hydraulic fluid (C73) prior to reassembly.

(2) Slide spring washer (11, figure 7-4), flat washer (10), packing (9), and nose seal (8) onto shaft (not illustrated).

(3) Install packing (6) on mating face (7), install packing (5) on retainer (4), and insert parts into housing (25) making sure seal drain hole in retainer is aligned with hole in housing. Secure retainer (4) with screws (12). Torque screws **14 TO 16 INCH-POUNDS**.

(4) Install new ring (2) and external driveshaft (1), then insert spring (3) in shaft (1). Compress ring (2) and slide shaft (1) into internal driveshaft (not illustrated) allowing ring (2) to expand, securing shaft (1).

(5) Rotate pump driveshaft by hand. Check for binding and excessive torque required for rotation.

b. Assemble rate piston port seal as follows:

(1) Install new packing (14) and reinstall plug (13).

(2) Torque plug **100 TO 110 INCH-POUNDS**. Install lockwire (C96) as necessary.

c. Assemble stroking piston port cap seal as follows:

(1) Install new packing (19) and reinstall plug (20).

(2) Torque plug **70 TO 80 INCH-POUNDS**. Lockwire (C96) as necessary.

d. Assemble trunnion and seal as follows:

WARNING

Degreasing Solvent is combustible and toxic to eyes, skin, and respiratory tract. Wear protective gloves and goggles/face shield. Avoid repeated or prolonged contact. Use only in well-ventilated areas (or use approved respirator as determined by local safety/industrial hygiene personnel). Keep away from open flames or other sources of ignition.

(1) Clean trunnion cover adjacent area of pump with degreasingsolvent (C62).

(2) Install two new packings (24), two trunnion covers (21), eight washers (22), and eight screws (23). Torque screws (23) **14 TO 16 INCH-POUNDS** and install lockwire (C96).

(3) Check for leaks in pump as described in inspection procedure. Refer to paragraph 7-12.

7-19. INSTALLATION — HYDRAULIC PUMP.

NOTE

Ensure that all tubing and fittings are clean and that connecting hoses are not frayed or cracked.

a. If new pump is being installed, remove four shipping plugs from pump and drain shipping fluid. Install hose fittings and packings in pump. Apply a thin coat of lubricant (C104) to splines on pump and mating splines on tachometer generator.

CAUTION

Check valve in case drain line must be installed with arrow pointing away from pump (8, figure 7-1 and 6, figure 7-2). Improper installation (backward) will cause the pump to overheat and can result in precautionary or forced landings.

b. Position pump and gasket on tachometer generator mounting pad, engaging pump shaft in splined gearshaft. Check that pressure outlet is at

lower side of pump. Install four nuts with washers on mounting studs.

c. Connect pressure line to pressure port.

d. Prime hydraulic pump with hydraulic fluid (C73) at suction port. Install suction line to suction port. Connect case drain hose (10, figure 7-1) to hydraulic check valve (8) in case drain port at top of pump.

NOTE

Ensure shipping plug has been removed from seepage drain on bottom of pump. No plug is required in seepage drain.

e. Fill reservoir with hydraulic fluid (C73).

f. Check hydraulic pressure. (Refer to paragraph 7-8 for hydraulic pressure check procedure.) Observe hydraulic system for leakage while making pressure check.

SECTION III SOLENOID VALVE

7-20. SOLENOID VALVE.

7-21. DESCRIPTION — SOLENOID VALVE. An electrical solenoid control valve is incorporated in the hydraulic system for turning the system on or off. The solenoid is installed forward of the transmission in the center work deck area.

Premaintenance Requirements for Hydraulic Solenoid Valves

Condition	Requirements
Model	OH-58A/C
Part No. or Serial No.	All
Special Tools	None
Test Equipment	Eddy Current Inspection Unit
Support Equipment	(S3)
Minimum Personnel Required	Two
Consumable Materials	(C62) (C73) (C96)
Special Environmental Conditions	None
References	TM 1-1520-254-23

7-22. INSPECTION — SOLENOID VALVE.

a. Ensure electrical connector is attached to solenoid.

b. Ensure wires to connector are not broken or loose.

c. Inspect valve and fittings for security of attachment.

d. Perform operational check. Refer to paragraph 7-7.

e. Inspect for leakage between solenoid (1, figure 7-5) and valve body (5).

f. Feel solenoid for clicking while solenoid is being energized.

NOTE

Solenoid is defective if nothing can be felt and HYD PRESS light does not go out when valve is energized.

7-23. REMOVAL — SOLENOID.

a. Remove forward transmission fairing if not previously accomplished. Refer to paragraph 2-39 A or 2-40 C .

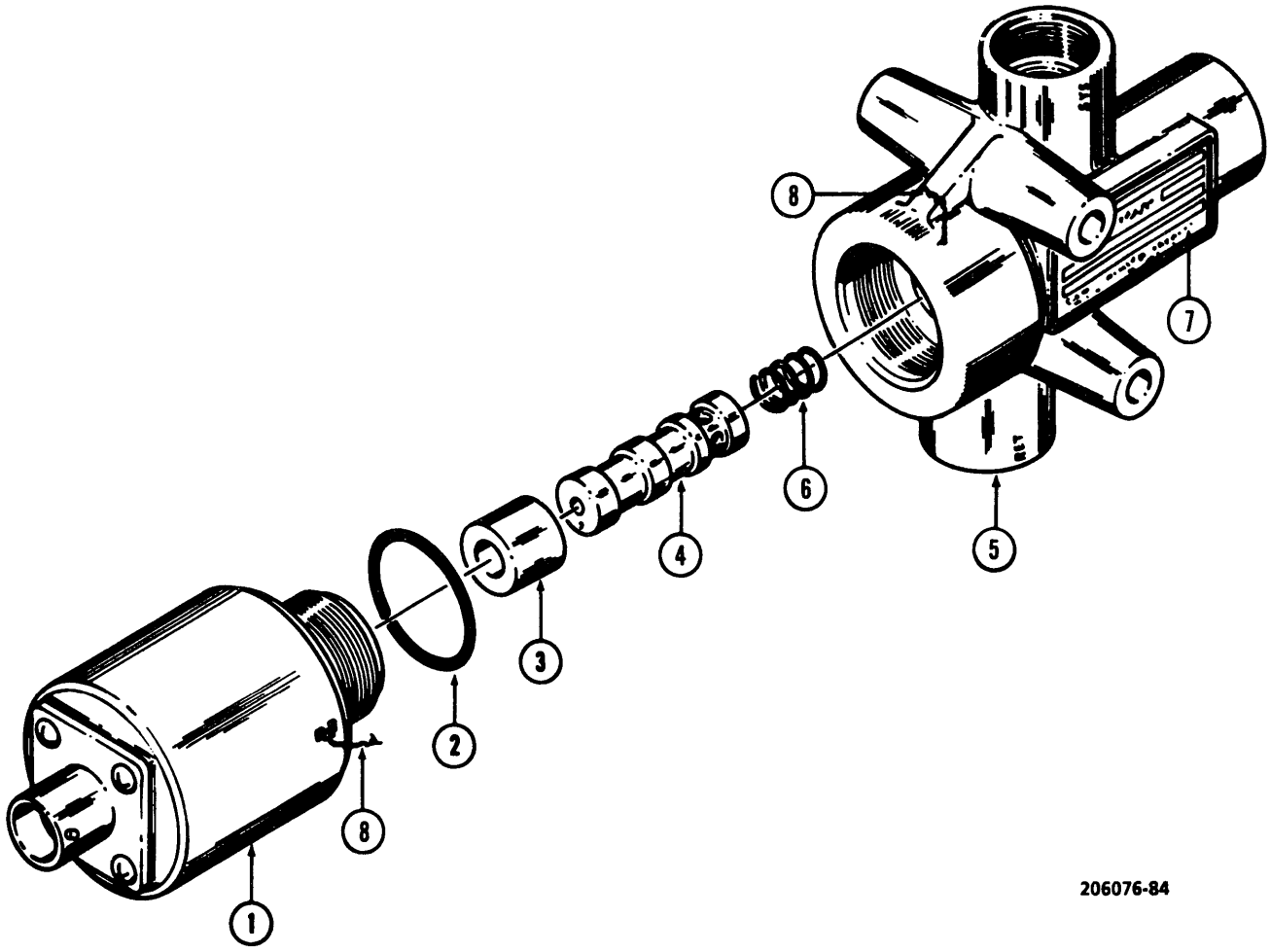

1. Solenoid
2. Packing
3. Spacer
4. Spool
5. Body
6. Spring
7. I.D. Plate
8. Lockwire

Figure 7-5. Solenoid Valve

b. Turn BAT switch OFF and disconnect external power.

c. Disconnect electrical connectors from solenoid valve (11, figure 7-1).

d. Place wiping cloth around solenoid valve (11) to catch hydraulic fluid.

e. Remove lockwire securing solenoid (1, figure 7-5) to body (5).

f. Remove solenoid (1) by unscrewing from body (5).

NOTE

Do not remove internal parts of valve.

7-24. INSTALLATION — SOLENOID VALVE.

a. Place a new packing (2, figure 7-5) on serviceable solenoid (2).

b. Screw solenoid (1) into body (5) and tighten firmly with hands to compress packing (2).

c. Secure solenoid (1) to body (5) using lockwire (C96).

d. Attach electrical connector to solenoid.

e. Perform operational check of solenoid valve.

(1) Inspect solenoid valve (refer to paragraph 7-22). (Turn BAT switch ON when visual inspection of electrical connector and wires is complete.)

NOTE

If HYD PRESS light does not illuminate or valve operates intermittently, remove and replace with serviceable solenoid valve. Refer to paragraphs 7-23 and 7-24.

(2) Install forward transmission fairing if inspection is satisfactory. Refer to paragraph 2-43.

7-25. REMOVAL — SOLENOID VALVE.

a. Remove forward transmission fairing. Refer to paragraph 2-39 A or 2-40 C .

b. Turn BAT switch OFF, and disconnect external power if external power is attached.

c. Disconnect electrical connector from solenoid (11, figure 7-1) and pressure switch (18).

d. Place wiping cloth around solenoid valve (11) to catch hydraulic fluid.

e. Disconnect hydraulic lines and fittings from solenoid valve body. Cap and plug all open lines.

f. Remove two bolts to release solenoid valve from mounting then remove solenoid valve.

g. If solenoid valve is to be replaced, remove fittings (22) and retain for installation.

7-26. TEST — SOLENOID VALVE.

a. Connect solenoid valve pressure port to hydraulic test stand (S3).

b. Cap SYS port.

c. Bleed air from solenoid valve by applying **50** psi to pressure port while electrically actuating the solenoid with 18-volts dc.

NOTE

Fluid will flow from return port if valve is properly functioning.

d. Shut down test stand and cap solenoid.

e. Apply **1500** psi to pressure port, then electrically energize solenoid with 18-volts dc. Measure leakage after waiting **1** minute. Leakage from return port must not exceed **10** cc/minute.

f. Apply **1500** psi to pressure port with solenoid de-energized. Measure leakage from return port after waiting **1** minute. Leakage from return port must not exceed **10** cc/minute.

g. Shut down test stand and remove solenoid valve from test stand.

7-27. DISASSEMBLY — SOLENOID VALVE.

a. Remove lockwire (8, figure 7-5) securing solenoid (1) to body (5).

b. Remove solenoid (1) by unscrewing from body (5).

c. Remove packing (2) and discard.

d. Remove spacer (3).

e. Remove spool (4) and spring (6) from body (5).

WARNING

Degreasing Solvent is combustible and toxic to eyes, skin, and respiratory tract. Wear protective gloves and goggles/face shield. Avoid repeated or prolonged contact. Use only in well-ventilated areas (or use approved respirator as determined by local safety/industrial hygiene personnel). Keep away from open flames or other sources of ignition.

7-28. CLEANING — SOLENOID VALVE. Clean hydraulic ports with degreasing solvent (C62).

7-29. INSPECTION — SOLENOID VALVE.

a. Inspect body (5) with dye penetrant. Refer to TM 1-1500-204-23. If a crack is suspected, refer to TM 1-1520-254-23, Technical Manual Aviation Unit Maintenance (AVUM) and Aviation Intermediate Maintenance (AVIM) Manual Nondestructive Inspection Procedures for OH-58 Helicopter Series.

b. Check all machined surfaces for nicks, scratches, corrosion pitting, burrs, and scoring. No damage allowed.

7-30. REPAIR — SOLENOID VALVE.

a. Replace all parts which do not meet inspection requirements.

b. Replace solenoid if valve did not actuate properly during test.

7-31. ASSEMBLY — SOLENOID VALVE.

a. Coat all internal parts with hydraulic fluid (C73) prior to assembly.

b. Insert spring (6, figure 7-5), spool (4), and spacer (3) into valve body.

c. Screw solenoid (1) into body (5) and tighten firmly with hand to compress packing (2).

d. Secure with lockwire (C96) and retest.

NOTE

If solenoid valve will not be used immediately, install clean valve return port.

e. Gradually apply **2250** psi to pressure port, then actuate solenoid twice with pressure applied. Check for external leakage after one minute. No external leakage is permitted.

f. Shut down test stand, then correct system port to test stand flow meter, and uncap return port.

g. Apply **1500** psi and **3.0** GPM to pressure port.

h. Electrically actuate the solenoid **10** times with 18-volts dc, and **1500** psi applied. Solenoid valve must actuate without evidence of hesitation or malfunction, as indicated by alternating external flow and **3.0** GPM from pressure port.

i. With solenoid de-energized, measure pressure drop from pressure to system ports with **1500** psi at pressure port and **3.0** GPM at system port. Pressure drop must not exceed **75** psi differential.

j. Shut down test stand, then cap the system port and remove the cap from the return port.

NOTE

Install polyethylene caps over the three ports and electrical connector. Valves which fail retest are not reparable.

7-32. INSTALLATION — SOLENOID VALVE.

a. Install all hydraulic fittings previously removed from solenoid valve using new packing (2, figure 7-5).

b. Lockwire (C96) nut and bolt securing fitting bodies to solenoid valve.

c. Position solenoid valve on mounting and secure with two mounting bolts and washers.

d. Install cross in left fitting of body with packing and nut.

e. Attach hydraulic lines and hoses. Refer to figure 7-1.

f. Move cyclic and collective controls through full range of travel and ensure that hoses do not bind or chafe.

g. Connect electrical connectors to solenoid valve and pressure switch.

h. Bleed hydraulic system and perform operational check.

SECTION IV. SERVOACTUATORS (CYCLIC AND COLLECTIVE)

7-33. SERVOACTUATORS (CYCLIC AND COLLECTIVE).

7-34. DESCRIPTION — SERVOACTUATORS (CYCLIC AND COLLECTIVE). The cyclic and collective control servoactuators are installed in a support located on the cabin roof. The collective control servoactuator is mounted in the center position, and the two cyclic servoactuators are mounted in the outboard positions. The cyclic and collective servoactuators reduce the operational loads of these flight control systems. An irreversible valve is incorporated in each servoactuator. In the event of loss of hydraulic pressure to a servoactuator, the plunger (12, figure 7-6) in the sequence valve (3) is pushed up by the lower spring and poppet valve (10), the upper spring holds the valve seat (11) down. This action closes the hydraulic return port and maintains irreversibility

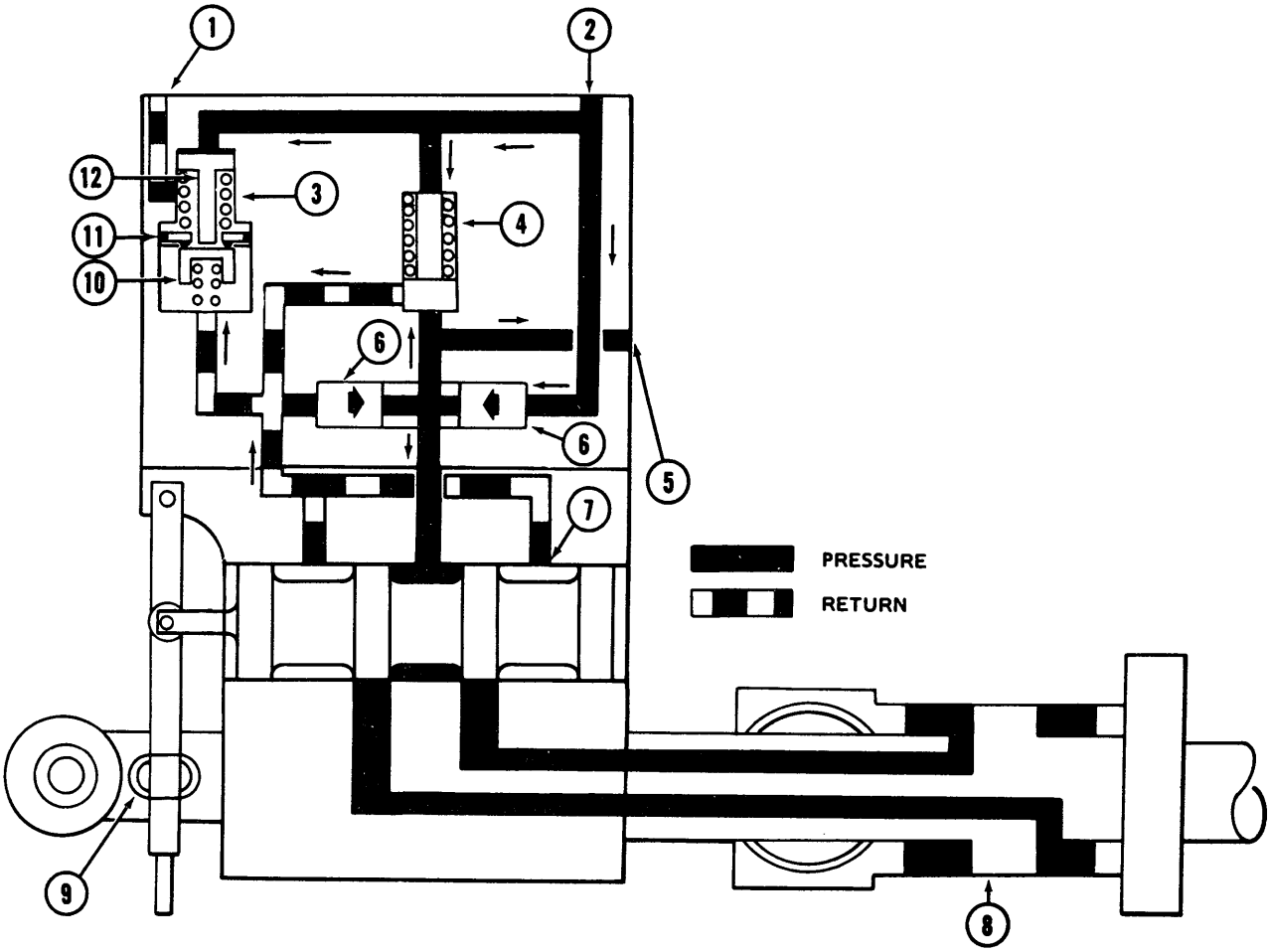

206076-85

1. Return Port
2. Pressure Port
3. Sequence Valve with Thermal Relief Provision, Sequence Valve Cracks at 100 to 188 psi. Full Flow at 250 psi.
4. Differential Relief Valve – Flow 575 to 645 psi Above System Pressure
5. Test Port
6. Check Valves
7. Slide and Sleeve Assemby
8. Actuator
9. Input Control
10. Poppet Valve
11. Valve Seat (Floating)
12. Plunger

Figure 7-6. Cyclic and Collective Servoactuator Schematic

independent of hydraulic pressure. This provides safe control of the helicopter even though hydraulic power is lost. The sequence valve (3) also serves to relieve thermal pressure buildup should this occur while the system is inactive. The sequence valve (3) would normally be closed when system pressure is below **100 to 180** psig. If internal pressure builds up, the valve seat (11) is pushed up, compressing the upper spring. The poppet valve (10) on the lower spring is prevented from following by an internal obstruction in the valve shown as a line above the poppet valve (10, figure 7-6). The differential pressure relief valve (4) serves to relieve pressure buildup which could occur from excessive rotor loads.

Premaintenance Requirements for Servoactuators

Condition	Requirements
Model	OH-58A/C
Part No. or Serial No.	All
Special Tools	None
Test Equipment	Eddy Current Inspection Unit
Support Equipment	None
Minimum Personnel Required	Two
Consumable Materials	(C55) (C62) (C73) (C138)
Special Environmental Conditions	None
References	TM 1-1520-254-23

7-35. CLEANING — SERVOACTUATORS (CYCLIC AND COLLECTIVE).

WARNING

Degreasing Solvent is combustible and toxic to eyes, skin, and respiratory tract. Wear protective gloves and goggles/face shield. Avoid repeated or prolonged contact. Use only in well-ventilated areas (or use approved respirator as determined by local safety/industrial hygiene personnel). Keep away from open flames or other sources of ignition.

a. Clean exterior of servo actuator with degreasing solvent (C62) using care to prevent solvent from contacting exposed portion of servo-extension shaft.

b. Clean exposed portion of servo-extension shaft with a clean, lint-free cloth moistened with hydraulic fluid (C73).

c. Clean fluid pressure and return ports.

7-36. INSPECTION — SERVOACTUATORS (CYCLIC AND COLLECTIVE).

a. Visually inspect servoactuators for cracks and other signs of obvious damage. Inspect aft end of piston rod, between jamnut on rod and valve housing for cracks. If a crack is suspected, refer to TM 1-1520-254-23, Technical Manual Aviation Unit Maintenance (AVUM) and Aviation Intermediate Maintenance (AVIM) Manual Nondestructive Inspection Procedures for OH-58 Helicopter Series.

b. Check dual slippage marks for slippage, broken marks, and deterioration (slippage marks are from clevis link, across locknut to servo drive 180 degrees apart). (Figure 7-7.) No adjustment authorized.

NOTE

Slippage marks still required when tab washer is used.

If only one slippage mark for locknut to clevis link and servo valve drive is present another mark may be added.

c. Inspect pressure and return ports for mutilated threads and/or chamfer. Check ports for dirt or other foreign material.

d. Inspect exposed portion of shaft at end of actuator for scoring and evidence of corrosion.

e. Visually inspect rod end assembly on bottom of servovalve housing for permanent deformation and cracking. If a crack is suspected, refer to TM 1-1520-254-23, Technical Manual Aviation Unit Maintenance (AVUM) and Aviation Intermediate Maintenance (AVIM) Manual Nondestructive Inspection Procedures for OH-58 Helicopter Series.

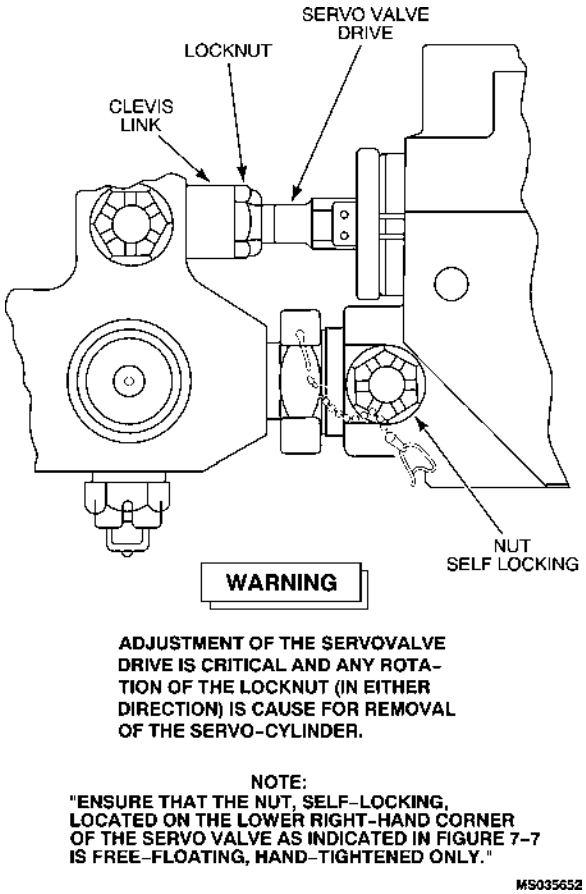

Figure 7-7. Hydraulic Servoactuator

f. Visually inspect the control mechanism for obvious damage, such as bent or broken linkage. Look for missing cotter pins.

WARNING

The control linkage which extends into the servo-housing on the bottom of the actuator and which is attached to middle bolt on trunnion assembly, must be treated with care. Do not adjust or tighten control linkage jamnut while installed on the aircraft. Refer to figure 7-7.

Screws (21, figure 7-8) must be capable of being turned by hand.

g. Move the control mechanism trunnion up and down with fingers. Trunnion must move freely. Ensure both slotted head screws through pilot input lever (sloppy link) can be rotated with fingers.

h. Replace servoactuators that do not meet inspection requirements.

a. Inspect servo-trunnion spindles for wear.

(1) Servo, forward trunnion spindle, minimum O.D. **0.748** inch.

(2) Servo, rear trunnion spindle, minimum O.D. **0.499** inch.

(3) Forward or rear trunnion spindle to bushing end-play (slop) shall not exceed **0.003** inch.

7-37. REMOVAL - SERVOACTUATOR (CYCLIC AND COLLECTIVE).

a. Disconnect hydraulic lines from servoactuator to be removed. Cap or plug open line and retain fittings for installation of servoactuator.

b. Disconnect cylinder extension tube assembly (10, figure 7-8) at servoactuator end of tube assembly. Refer to figure 7-9 for breakdown of cylinder extension tube assembly attaching hardware.

c. Remove four bolts (16 and 18, figure 7-8) to permit separation of the two bearing plate assemblies (8) or trunnion plates (3) as applicable for servoactuator being removed. Remove servoactuator.

NOTE

Do not disturb position of shim plates under plate assemblies or trunnion plates. Retain original positions.

7-38. REPAIR - SERVOACTUATORS (CYCLIC AND COLLECTIVE).

CAUTION

Remove one screw at a time and reinstall first screw prior to removing the second. Do not reuse nut (23, figure 7-8).

a. Remove cotter pin (22), nut (23), and washer (24) from screw (21).

b. Screw (21) may be polished with crocus cloth (C55) and reinstalled or replaced as necessary.

c. Install screw (21), washer (24), and new nut (23). Tighten nut firmly against shoulder of screw, then back off to nearest castellation and install cotter pin (22). Ensure that screws can be rotated by hand.

7-39. INSTALLATION - SERVOACTUATORS (CYCLIC AND COLLECTIVE).

NOTE

If new plate assemblies (8) or new bushing are being installed, ensure cylinder trunnion can be moved freely in either fore or aft direction by pivoting bell cranks with control tubes disconnected. Should the cylinder trunnion fail to move freely, bushings may be line reamed or burnished, but not to exceed 0.501 maximum diameter. Should not be more than 0.002 difference between the O.D. spindle and I.D. of bushing.

a. Inspect support (19, figure 7-8) and trunnion plates (3) for presence of serviceable dissimilar metal tape on mating surface of these parts. If tape is not serviceable, clean the mating surfaces and apply new dissimilar metal tape (C138) to either the support or to the trunnion plate. Place two trunnion plates (3) on servoactuator (5) with flanged side of bushing inboard toward servoactuator. Install two bolts (18) to secure trunnion plates to support (19) with shims (4) in place between trunnion plates and servoactuator. Measure gaps (clearance) between trunnion plates and servoactuators. (See detail A). Total gap for each servoactuator (both sides combined) should be **0.005 TO 0.020** inch. Remove trunnion plates (3) as required, and peel shims (4) to obtain proper gap. Reinstall trunnion plates.

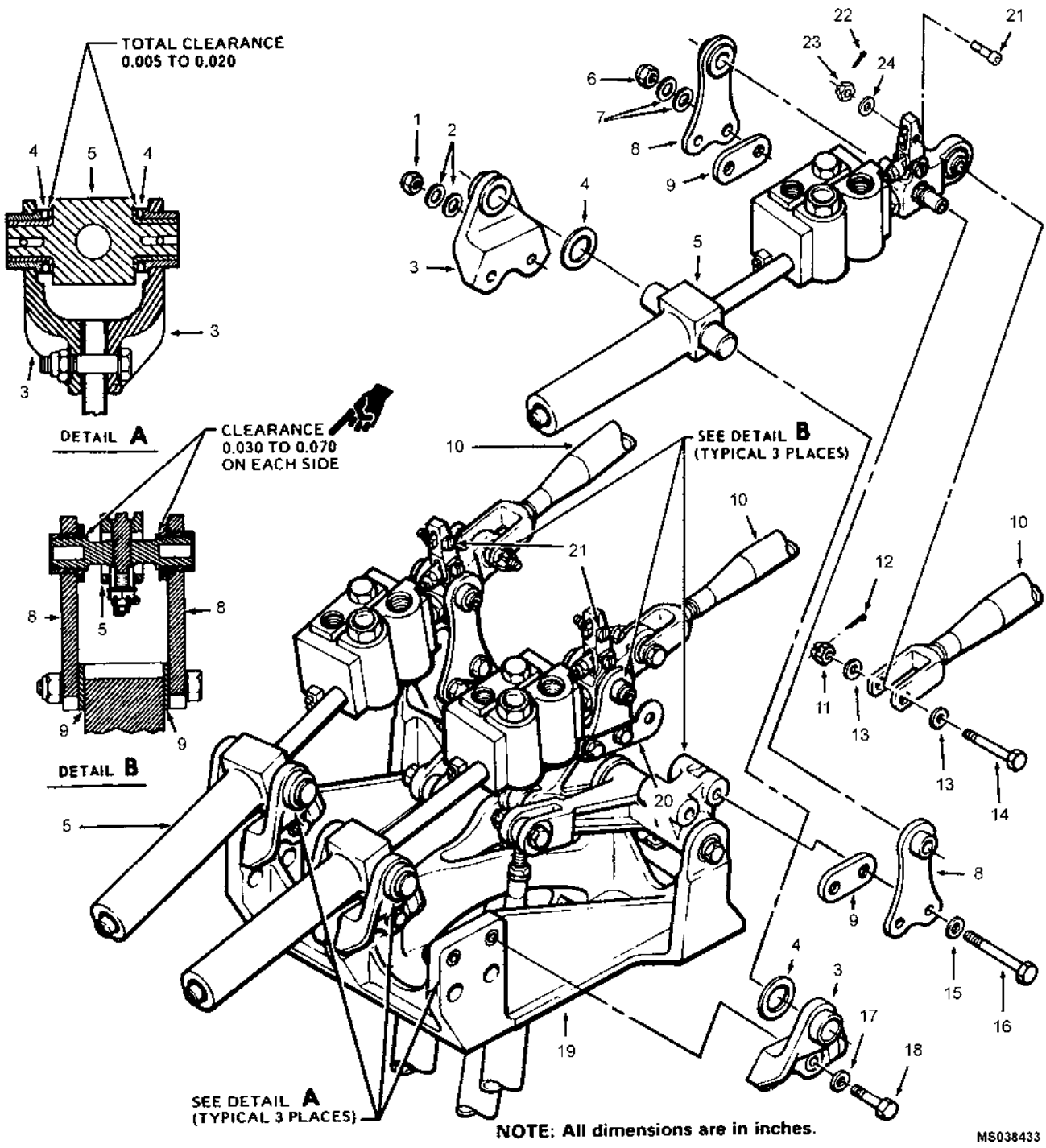

1. Nut
2. Washer
3. Trunnion Plate
4. Shim
5. Servoactuator
6. Nut
7. Washer
8. Bearing Plate
9. Shim
10. Cylinder Extension Tube
11. Nut
12. Cotter Pin
13. Washer
14. Bolt
15. Washer
16. Bolt
17. Washer
18. Bolt
19. Cylinder and Support Assembly
20. Droop Compensator Plate
21. Screw
22. Cotter Pin
23. Nut
24. Washer

Figure 7-8. Cyclic and Collective Servoactuator Installation

b. Inspect plates assemblies (8) and if necessary, apply dissimilar metal tape (C138) as described in step a. Place two plate assemblies (8) on servoactuator with flanged bushings inboard toward servoactuator. Install two bolts (16) to secure plate assemblies (8) and shims (9) to support assemblies (19). Measure gaps (between) plate assemblies and servoactuators at trunnion. (See detail b). Add or remove shims (9) to obtain proper gap. Gap must be **0.030** to **0.070** inch on each side of trunnion. To check for **0.030** to **0.070** inch gap, laterally move and hold trunnion. Cycle bearing plate back and forth through several inches of travel to allow trunnion to seek its free position, then check gap. Repeat check fro trunnion gap in opposite direction.

NOTE

Use one washer (17 and 15) under head of bolt (16 and 18) and two washers (2 and 7) under nut (1 and 6). Omit one washer under nut if needed to allow two thread exposure.

c. Connect cylinder extension tube (10) at aft end of servoactuator with bolt (14), washers (13), and nut (11). Install cotter pin (12).

d. Remove caps and plugs and connect hydraulic lines to servoactuator.

e. Bleed hydraulic system and test servoactuators. Refer to paragraph 7-7.

SECTION V. SERVOACTUATOR SUPPORT

7-40. SERVOACTUATOR SUPPORT.

7-41. DESCRIPTION - SERVOACTUATOR SUPPORT. The cyclic and collective control servoactuator support is installed on the cabin roof. It serves as a mount for the servoactuators and associated bellcranks.

7-42. INSPECTION - SERVOACTUATOR SUPPORT (INSTALLED).

a. Inspect support for cracks and corrosion. No cracks are permitted.

b. Inspect support for security of mounting.

7-43. REPAIR - SERVOACTUATOR SUPPORT.

a. Remove corrosion using sandpaper (C126).

NOTE

Depth of repair after removal of corrosion deposits must not exceed 0.002 inch.

b. The repaired area must be treated with corrosion preventive. Refer to TM 1-1500-204-23.

7-44. REMOVAL - SERVOACTUATOR SUPPORT.

a. Remove servoactuators if installed. Refer to paragraph 7-37.

b. Remove screws, washers, nuts, and cotter pins (14, figure 7-9) attaching cyclic control tubes (15) to bellcranks (20 and 24).

c. Remove bolt, washers, nut, and cotter pin (17) attaching collective control tube (16) to bellcrank (21). Remove bolts (19), nuts (22), and cotter pins (23) attaching bellcranks (20 and 24) to support assembly (18).

d. Remove bolt (28), washers (26), nut (25), and cotter pin (23) attaching bellcrank (21) to support assembly (18).

e. Remove screws attaching cover assembly (27) to cabin roof. Remove cover assembly (27).

f. Remove four bolts (2), two bolts (6), eight washers (3), two washers (5), four nuts (4), and support assembly (18) from cabin roof (1).

g. Remove anti-torque control bellcrank from bottom of servoactuator. Refer to paragraph 11-115.

h. Use heated putty knife to cut sealant between servoactuator support and cabin roof.

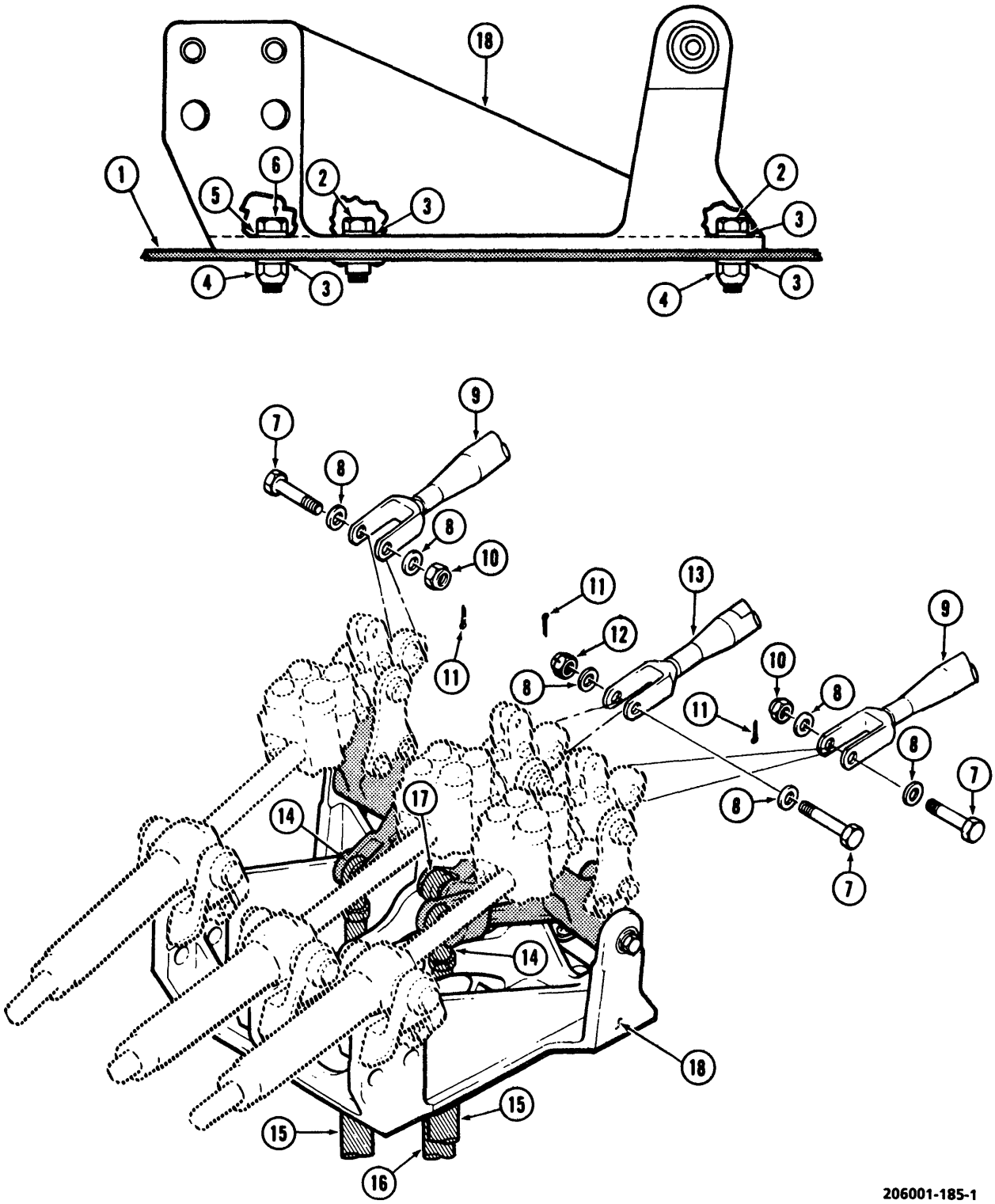

Figure 7-9. Servoactuator Support Assembly Installation (Sheet 1 of 2)

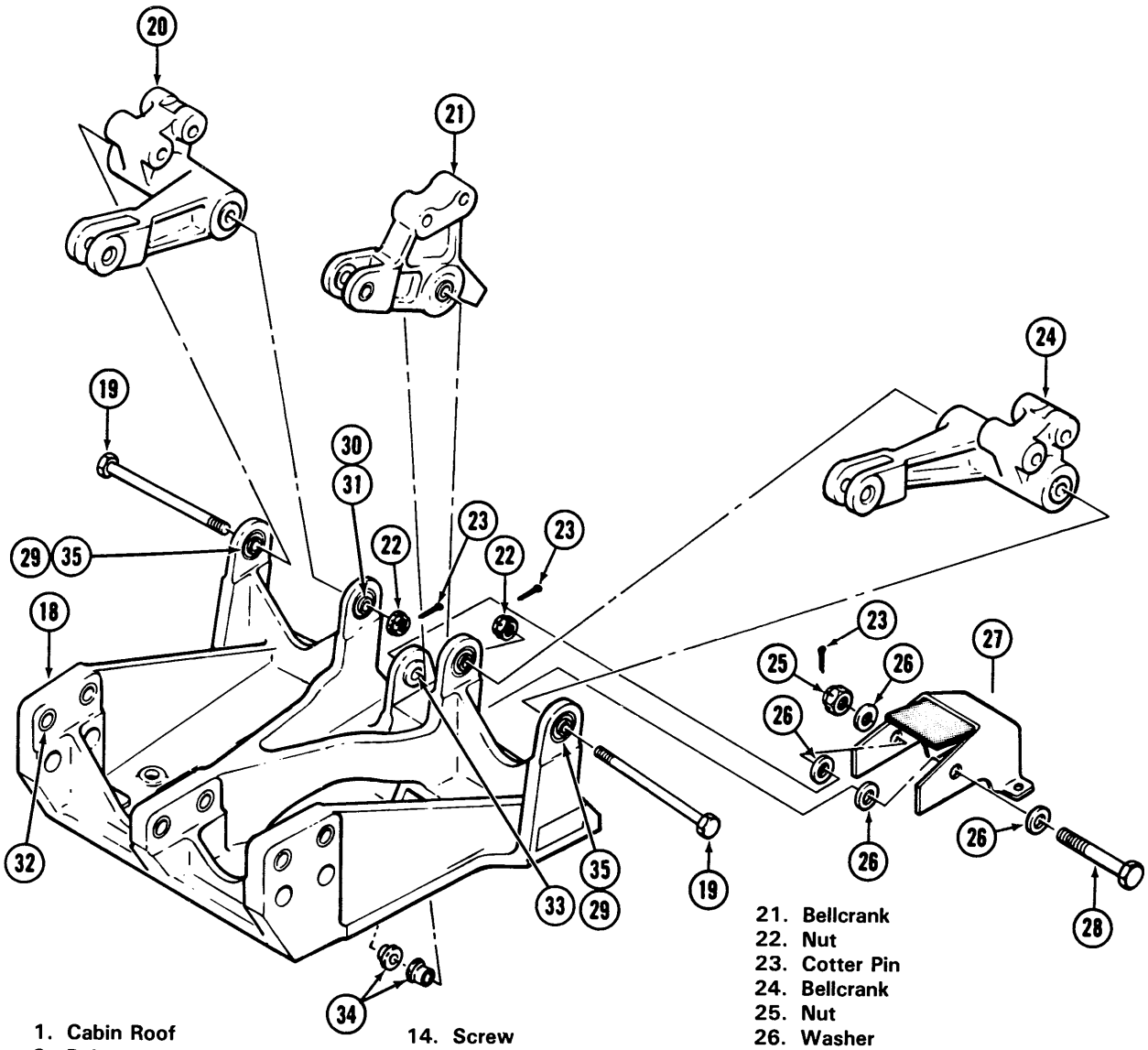

1. Cabin Roof
2. Bolt
3. Washer
4. Nut
5. Washer
6. Bolt
7. Bolt
8. Washer
9. Control Tube
10. Nut
11. Cotter Pin
12. Nut
13. Control Tube
14. Screw
    Washer (2 Each)
    Nut
    Cotter Pin
15. Cyclic Control Tube
16. Collective Control Tube
17. Bolt
    Washer (2 Each)
    Nut
    Cotter Pin
18. Support Assembly
19. Bolt
20. Bellcrank
21. Bellcrank
22. Nut
23. Cotter Pin
24. Bellcrank
25. Nut
26. Washer
27. Cover Assembly
28. Bolt
29. Sleeve, Steel (2 Places)
30. Sleeve, Aluminum (2 Places)
31. Bearing (2 Places) Staked
32. Bushing, Sleeve (6 Places)
33. Bushing, Flange
34. Bushing, Sleeve
35. Bearing (2 Places) (Slip Fit in Sleeve)

206001-185-2

Figure 7-9. Servoactuator Support Assembly Installation (Sheet 2 of 2)

i. Remove servoactuator support.

7-45. INSPECTION — SERVOACTUATOR SUPPORT (REMOVED).

a. Inspect support casting for cracks. No cracks are permitted.

b. Inspect support casting for corrosion pitting. Corrosion pitting must not exceed **0.002** inch after removal or corrosion.

c. Inspect mounting holes for elongation.

d. Check bearings for smooth operation and security.

e. Inspect for unprotected bare surfaces.

f. Check inner two bearings for ring staking on both sides. Inner two bearings must be tight in their respective sleeves (**0.002 to 0.0012** inch tight at time of installation).

g. Check outer two floating bearings (35) for excessive looseness. Looseness between outer two bearings and their respective sleeves must not exceed **0.0015** inch. Ensure steel sleeves are ring staked in housing assembly.

h. Check bushings for wear, damage, or looseness in housing. Maximum elongation to bushing holes is not to exceed **0.003** inch.

7-46. REPAIR — SERVOACTUATOR SUPPORT. Refer to paragraphs 7-43 and 11-126.

7-47. INSTALLATION — SERVOACTUATOR SUPPORT.

WARNING

Excessive sealing compound or other foreign matter concentrated under edge of support assembly can cause support to crack during installation.

a. Remove old sealing compound, oil, and foreign material from edge of support and roof.

b. Apply a bear of sealing compound (C131) to faying surface and around mating edge of support assembly (18) and cabin roof (1).

c. Position support assembly (18) on cabin roof (1) and secure as follows:

NOTE

Ensure aluminum washers are installed under bolt heads and nuts. After all bolts and washers are installed, incrementally torque bolts (2), and nuts (4), in sequence, **100 TO 140 INCH-POUNDS** plus free running torque.

(1) Install two aft bolts (2) and aluminum washers (3) through support assembly (18) and cabin roof (1) and secure with nuts (4).

(2) Install two bolts (2) with aluminum washers (3) through support assembly (18) and secure into nut plates in cabin roof (1).

(3) Install two forward bolts (6) with thin aluminum washers (5) under bolt heads through support assembly (18) and cabin roof (1).

(4) Install two washers (3) and secure with two nuts (4).

(5) Fair out sealant squeeze-out to fill edge voids. Remove any excess.

(6) Install anti-torque control bellcrank on bottom of servoactuator. Refer to paragraph 11-116.

d. Install cover assembly (27) on cabin roof with two screws.

e. Install cover assembly (27) and bellcrank (21) on support assembly (18) with bolt (28), washers (26) and nut (25). Torque nut **30 TO 40 INCH-POUNDS** and install cotter pin (23).

f. Ensure that floating bearings (35) are installed in outer legs of support assembly (18), then install bellcranks (20 and 24) on support assembly with bolts (19), nuts (22), and cotter pins (23).

g. Connect collective control tube (16) to bellcrank (21) with bolt, washer, nut, and cotter pin (17).

h. Connect cyclic control tubes (15) to bellcranks (20 and 24) with screws, washers, nuts, and cotter pins (14).

i. Install servoactuators. Refer to paragraph 7-39.

j. Perform functional test system. Refer to paragraph 7-7.

SECTION VI PRESSURE SWITCH

7-48. PRESSURE SWITCH.

7-49. DESCRIPTION — PRESSURE SWITCH. The hydraulic switch (18, figure 7-1) is installed on the right side of the solenoid valve. When hydraulic pressure is below **300** psig, the pressure switch causes the HYD PRESS warning light in the pedestal to illuminate.

7-50. INSPECTION — PRESSURE SWITCH.

a. Visually inspect pressure switch for damage.

b. Inspect electrical harness for condition and security.

7-51. REMOVAL — PRESSURE SWITCH.

a. Remove forward transmission fairing.

b. Turn BAT switch OFF and disconnect external power. Disconnect electrical connector from pressure switch.

c. Place wiping cloth around pressure switch to catch hydraulic fluid. Screw pressure switch out of fitting body and remove. Cap or plug openings.

7-52. REPAIR OR REPLACEMENT — PRESSURE SWITCH. Replace pressure switch if it does not meet inspection requirements.

7-53. INSTALLATION — PRESSURE SWITCH.

a. Install packing and screw pressure switch into fitting body.

b. Install electrical connector.

c. Bleed hydraulic system and test pressure switch. Refer to paragraph 7-7.

SECTION VII. HYDRAULIC RESERVOIR

7-54. HYDRAULIC RESERVOIR.

7-55. DESCRIPTION — HYDRAULIC RESERVOIR. The hydraulic reservoir (6, figure 7-1) is mounted on a bracket on the forward side of the transmission above the hydraulic pump. The reservoir has a cover, a filler screen, an internal baffle, vent screen, overflow scupper, drain plug, a fluid low level sight gage, and connections for suction, return and scupper vent line.

Premaintenance Requirements for Hydraulic Reservoir

Condition	Requirements
Model	OH-58A/C
Part No. or Serial No.	All
Special Tools	None
Test Equipment	Eddy Current Inspection Unit
Support Equipment	None
Minimum Personnel Required	One
Consumable Materials	(C2) (C39) (C40) (C62) (C96) (C116) (C125)
References	TM 1-1520-254-23

7-56. INSPECTION — HYDRAULIC RESERVOIR.

a. Inspect reservoir body, cover, sight gage plug, and all fittings for damage and corrosion. If a crack is suspected, refer to TM 1-1520-254-23, Technical Manual Aviation Unit Maintenance (AVUM) and Aviation Intermediate Maintenance (AVIM) Manual Nondestructive Inspection Procedures for OH-58 Helicopter Series.

WARNING

Degreasing Solvent is combustible and toxic to eyes, skin, and respiratory tract. Wear protective gloves and goggles/face shield. Avoid repeated or prolonged contact. Use only in well-ventilated areas (or use approved respirator as determined by local safety/industrial hygiene personnel). Keep away from open flames or other sources of ignition.

b. Inspect reservoir strainer (41) and vent screen assembly (36) for rust, corrosion, cleanliness, cuts, and breaks. Clean screens using degreasing solvent (C62) and brush, then air dry. Refer to figure 7-1.

c. Inspect reservoir for leaks, check reservoir cover (42) for proper locking and security. If normal

thumb force disengages catch, replace cover or catch as required. Check cover latching tab for cracks. If cracked, replace cover.

d. Inspect drain plug (30) for proper locking and security.

e. Inspect sight gage for cracks and discoloration. If required, replace sight gage as follows:

(1) Remove lockwire securing sight plug (35) to reservoir housing (43). Remove sight plug (35) and packing (27).

(2) Install packing (27) on sight plug (35). Install sight plug (35) to reservoir housing (43). Torque sight plug to **95-105 INCH-POUNDS**. Secure sight plug to reservoir with lockwire (C96).

7-57. REMOVAL — HYDRAULIC RESERVOIR.

a. Remove forward transmission fairing. (Refer to paragraph 2-39 **A** or 2-40 **C**.) Provide suitable container to catch hydraulic fluid.

b. Remove plug (30, figure 7-1) and packing (31), drain reservoir.

c. Disconnect suction, return, and scupper drain lines from reservoir fittings. Cap or cover open lines and fittings.

d. Remove three bolts, nuts, and washers securing reservoir to mounting bracket and remove reservoir.

7-58. REPAIR OR REPLACEMENT — HYDRAULIC RESERVOIR.

a. Replace damaged or unserviceable gaskets, seals, lock, hinge pin, etc.

b. Corrosion pitting should be removed with sandpaper (C125) or a hand buffing wheel may be used. If depth of the repaired area exceeds **0.020** inch, replace reservoir.

c. Treat repaired magnesium surfaces with chromic acid (C39) or chrome pickle solution (C40), thoroughly rinse with clean water and dry completely. Refer to TM 1-1500-204-23.

WARNING

Acetone is extremely flammable and toxic to eyes, skin, and respiratory tract. Wear protective gloves and goggles/face shield. Avoid repeated or prolonged contact. Use only in well-ventilated areas (or use approved respirator as determined by local safety/industrial hygiene personnel). Keep away from open flames, sparks, hot surfaces or other sources of ignition.

d. Clean parts with acetone (C2).

e. Exterior surface may be touched up with epoxy polyamide primer (C116).

7-59. INSTALLATION — HYDRAULIC RESERVOIR.

a. Reinstall plug (30, figure 7-1) with packing (31) hand tight plus an additional 1/4 turn and lockwire (C96). Position reservoir on mounting bracket on forward side of transmission. Install three bolts, nuts, and washers.

b. Connect lines to return, suction, and scupper drain fittings of reservoir.

c. Service reservoir in accordance with paragraph 1-12.

d. Perform system operational check. Refer to paragraph 7-7.

SECTION VIII HYDRAULIC FILTERS

7-60. HYDRAULIC FILTERS.

7-61. DESCRIPTION — HYDRAULIC FILTERS. Two hydraulic filters (3 and 4, figure 7-1) are installed in the hydraulic system. The filters are located on the right side of the transmission work deck. Both filters incorporate pop-out buttons that pop out to indicate an impending filter stoppage on pressure line and impending bypass on return line filter. Only the filter on the return line incorporates a bypass valve. The filter assembly elements are accessible for removal and installation.

Premaintenance Requirements for Hydraulic Filters

Condition	Requirements
Model	OH-58A/C
Part No. or Serial No.	All
Special Tools	None
Test Equipment	None
Support Equipment	None
Minimum Personnel Required	One
Consumable Materials	(C96)
Special Environmental Conditions	Clean, Dust Free Area

7-62. DELETED.

7-63. INSPECTION — HYDRAULIC FILTERS.

a. Check threads and ports for damage.

NOTE

While an extended red pop-out button indicates an impending filter stoppage, operation is also affected by low temperature, pressure surges, excessive vibration, and faulty pop-out button.

b. Check to see if red pop-out button is extended. If red pop-out button is extended, proceed as follows:

(1) Reset red pop-out button.

(2) If red pop-out button is extended after the next engine run, remove the filter element and replace with a new filter element.

c. If red pop-out button continues to extend after the next engine run, remove the filter housing/assembly and replace with a new filter housing/assembly.

7-64. REMOVAL — HYDRAULIC FILTERS.

a. Remove forward transmission fairing.

b. Disconnect hydraulic quick-disconnect at the quick-disconnect on the front of the filter.

c. Disconnect hydraulic line aft of filter housing, and cap lines.

d. Remove two bolts, nuts, and washers securing filter to mounting bracket and remove filter from bracket.

e. Remove lockwire and screw filter assembly from body. Remove filter element.

7-65. REPAIR OR REPLACEMENT — HYDRAULIC FILTERS. Replace filter assembly, packings, element, or body if inspection requirements are not met. Reset the red pop-out button by pressing down.

7-66. INSTALLATION — HYDRAULIC FILTERS.

a. Position filter element into filter assembly with new packing in place. Screw assembly into body, torque **20 TO 60 INCH-POUNDS** and secure with lockwire (C96).

b. Position filter on mounting bracket and install two mounting bolts, nuts, and washers.

c. Remove caps from lines and install aft hydraulic lines.

d. Connect hydraulic quick-disconnect at the quick-disconnect on the front of the filter. Bleed hydraulic system. Refer to paragraph 7-7.

SECTION IX. HYDRAULIC HOSES, LINES, AND QUICK-DISCONNECTS

7-67. HYDRAULIC HOSES, LINES, AND QUICK-DISCONNECTS.

7-68. DESCRIPTION — HYDRAULIC HOSES, LINES, AND QUICK-DISCONNECTS. Hydraulic hoses and lines are utilized to connect the various components of the hydraulic system. The quick-disconnect hoses (1 and 2, figure 7-1) are attached to the two hydraulic filter assemblies (3 and 4) to provide a means of connecting a ground test unit to the hydraulic system.

7-69. INSPECTION — HYDRAULIC HOSES, LINES, AND QUICK-DISCONNECTS.

a. Inspect hoses and lines for damage and serviceability.

b. Inspect quick-disconnects for proper locking, cracks, and distortion.

7-70. REMOVAL — HYDRAULIC HOSES, LINES, AND QUICK-DISCONNECTS.

a. Disconnect each end of hoses and lines from attaching points.

b. Disconnect hose coupling half from coupling half installed in hydraulic filter assembly.

c. Remove coupling half from hose.

d. Remove coupling half and packing from filter assembly.

7-71. REPAIR OR REPLACEMENT — HYDRAULIC HOSES, LINES, AND QUICK-DISCONNECTS. Replace hoses, lines, and quick-disconnects that fail to meet inspection requirements.

7-72. INSTALLATION — HYDRAULIC HOSES, LINES, AND QUICK-DISCONNECTS.

a. Remove caps from end fittings of hose or line.

b. Inspect hose or line being installed for thorough cleanliness.

c. Secure each end of hose or line to components from which defective hose or line was previously removed.

d. Install hose coupling half on hose fitting.

e. Install new packing and quick-disconnect half in filter assembly.

f. Bleed hydraulic system and fill reservoir as outlined in paragraphs 7-7 and 1-12.

g. Ensure the pins on quick-disconnect are fully engaged.

SECTION X. HYDRAULIC CHECK VALVE

7-73. HYDRAULIC CHECK VALVE.

7-74. DESCRIPTION — HYDRAULIC CHECK VALVE. A check valve (8, figure 7-1) is installed in the hydraulic pump adjacent to the mounting flange. The check valve prevents hydraulic fluid from entering the hydraulic pump through the case drain port.

Premaintenance Requirements for Hydraulic Check Valve

Condition	Requirements
Model	OH-58A/C
Part No. or Serial No.	All
Special Tools	None
Test Equipment	Eddy Current Inspection Unit
Minimum Personnel Required	Two
Consumable Materials	None
Special Environmental Conditions	None
References	TM 1-1520-254-23

7-75. INSPECTION — HYDRAULIC CHECK VALVE.

a. Visually inspect check valve for damage, corrosion or pitting. If a crack is suspected, refer to TM 1-1520-254-23, Technical Manual Aviation Unit Maintenance (AVUM) and Aviation Intermediate Maintenance (AVIM) Manual Nondestructive Inspection Procedures for OH-58 Helicopter Series.

b. Check threads for distortion and damage.

7-76. REMOVAL — HYDRAULIC CHECK VALVE.

a. Remove case drain hose (10, figure 7-1) from check valve.

b. Remove check valve (8) and packing from hydraulic pump case drain port. Cap or plug openings.

7-77. REPAIR OR REPLACEMENT — HYDRAULIC CHECK VALVE. Replace check valve if inspection requirements are not met.

7-78. INSTALLATION — HYDRAULIC CHECK VALVE.

CAUTION

Check valve (8) can be installed backward. Ensure that arrow on the check valve is pointing away from the hydraulic pump.

a. Install check valve (8, figure 7-1) and new packing in hydraulic pump case drain port adjacent to pump flange. Ensure arrow on check valve is pointing away from pump. Refer to paragraph 7-19.

b. Connect case drain hose (10) to check valve (8).

SECTION XI HYDRAULIC RELIEF VALVE

7-79. HYDRAULIC RELIEF VALVE.

7-80. DESCRIPTION — HYDRAULIC RELIEF VALVE. The hydraulic relief valve (19, figure 7-1) is provided to automatically bypass inlet pressure to return line if inlet line pressure exceeds **670 to 770** psig.

Premaintenance Requirements for Hydraulic Relief Valve

Condition	Requirements
Model	OH-58A/C
Part No. or Serial No.	All
Special Tools	None
Test Equipment	Eddy Current Inspection Unit
Minimum Personnel Required	Two
Consumable Materials	None
Special Environmental Conditions	None
References	TM 1-1520-254-23

7-81. INSPECTION — HYDRAULIC RELIEF VALVE.

a. Inspect relief valve for cracks. If a crack is suspected, refer to TM 1-1520-254-23, Technical Manual Aviation Unit Maintenance (AVUM) and Aviation Intermediate Maintenance (AVIM) Manual Nondestructive Inspection Procedures for OH-58 Helicopter Series.

b. Check relief valve (19, figure 7-1) for proper installation.

7-82. TEST — HYDRAULIC RELIEF VALVE.

a. Connect hydraulic test stand at quick-disconnect couplings (1 and 2, figure 7-1) located on right hand side of helicopter.

b. Adjust test stand to provide a minimum flow of **1.90** GPM with pressure compensator adjusted to **600** psig.

c. Place hand on relief valve (to detect change in valve) while slowly increasing pressure. Valve must open between **670 to 770** psig.

d. Slowly decrease pressure. Valve must reset at **670** psig.

e. Reduce pressure to zero.

f. Disconnect hydraulic test stand and reconnect helicopter quick-disconnect couplings.

7-83. REMOVAL — HYDRAULIC RELIEF VALVE.

a. Disconnect hydraulic lines and fittings from relief valve (19, figure 7-1) and discard packing.

b. Unscrew relief valve from fitting and discard packing.

7-84. REPAIR OR REPLACEMENT — HYDRAULIC RELIEF VALVE. Replace hydraulic relief valve if inspection requirements are not met.

7-85. INSTALLATION — HYDRAULIC RELIEF VALVE.

a. Screw relief valve (19, figure 7-1) and new packing into fitting.

b. Connect hydraulic lines.

c. Functionally test hydraulic relief valve. Refer to paragraph 7-82.

CHAPTER 8
INSTRUMENT SYSTEMS

8-1. INSTRUMENT MAINTENANCE.

8-2. GENERAL. This chapter provides the instructions and information required by maintenance personnel to perform maintenance on OH-58 series helicopter instruments. All flight, navigation, engine, and miscellaneous instruments are mounted in instrument panel attached to console. Power loading charts and detailed system wiring diagrams are contained in Appendix F. Maintenance activities shall request assistance for electrical system repair in accordance with maintenance allocation chart Appendix B.

WARNING

Self-luminous dials may contain radioactive materials. If such an instrument is broken or becomes unsealed, avoid personal contact. Use forceps or gloves made of rubber or polyethylene to pick up contaminated material. Place material and gloves in a plastic bag. Seal bag and dispose of it as radioactive waste in accordance with AR 755-15 and TM 3-261 (Refer to TB 55-1500-314-25). Repair procedures shall conform to requirements in AR 700-52.

NOTE

For instrument piping installation refer to figure 8-1; additional illustrations, pertaining to instrument location and marking, circuit breaker location, and control switch information are contained in TM 55-1520-228-10 and TM 55-6600-200-20 for marking instruments and interpretation of markings. For instrument configurations, refer to figure 8-3.

NOTE

Throughout this chapter, when performing operational checks, use auxiliary power unit set to 28 Vdc (±0.5) volt unless otherwise specified.

The following steps list general procedures to follow in removing, inspecting, cleaning, and installing instruments mounted on the pilot and copilot instrument panel.

8-3. CLEANING. Clean panel and instrument cover glasses with a suitable soft, lint-free cloth.

8-4. INSPECTION.

a. Inspect for loose, cracked, or broken cover glasses.

b. Inspect for proper and secure mounting.

c. Inspect range markings and decals for completeness and legibility. Refer to TM 55-1520-228-10.

8-5. REMOVAL — INSTRUMENTS. Remove any instrument from panel by following general procedure.

WARNING

Before removing any instrument from the instrument panel, ensure that BAT switch is OFF, and that external power is disconnected from the helicopter.

a. Remove mounting screws. Remove instrument.

b. Disconnect electrical leads or instrument piping from back of instrument. Necessary access may be through side panels and console.

c. Protect ends of electrical leads with electrical tape (C137) and cap open piping and openings on instrument.

CAUTION

To prevent static charges from damaging the turbine outlet temperature indicator, install a piece of copper wire across the instrument terminals. Remove the wire before reinstallation into the panel.

8-6. REPAIR OR REPLACEMENT — INSTRUMENTS. Replace any missing or damaged limits or index markings on cover glasses of instruments. Also replace any required decals which are not clearly legible. Replace any instrument if cover glass is loose or broken, or when found to be unserviceable. Replace instruments if range markings are not legible.

NOTE

When range markings are illegible and replacement instruments are not readily available, range markings may be applied in accordance with TM 55-1520-228-10 using tape (C142) and protected with a clear coat of lacquer (C90). Tape shall not be used to change calibration or range of instruments.

8-7. INSTALLATION — INSTRUMENTS. Install any instrument in panel by the following general procedures:

WARNING

Before installing any instrument on the instrument panel, ensure that BAT switch if OFF, and that external power is disconnected from the helicopter.

a. Check instrument for correct markings on cover glass.

b. Remove protective caps or covers as necessary. Connect electrical leads and instrument piping.

c. Use silicone lubricant (C104) on threads of nylon fittings.

d. Torque coupling nuts finger tight.

CAUTION

If a copper wire was installed between terminals during removal of TOT indicator, remove the wire at this time.

Do not tighten mounting screws more than necessary to hold instrument as excessive tension may deform instrument case.

e. Position instrument in panel. Install mounting screws.

NOTE

When any instrument is replaced or reinstalled in the pitot-static system, a functional check will be performed in accordance with paragraph 8-155.

f. Perform functional test after installation of instruments.

8-8. SYSTEM BLEEDING — ENGINE OIL PRESSURE INDICATOR AND TORQUE-METER INDICATOR.

a. Start and operate the engine. Refer to TM 55-1520-228-10.

b. Wrap cloth around fitting at back of the indicator.

c. Loosen, but do not remove the tube connector from the back of indicator.

d. Allow engine oil to drip into cloth until a steady flow is observed.

e. Tighten the connector at back of indicator and wipe up any spilled oil.

f. Shut down engine.

g. Check the engine oil level and replenish if necessary (refer to Chapter 1).

8-9. TESTING — INSTRUMENTS. Perform operational check of the repaired or replaced instrument. Refer to TM 55-1520-228-10.

8-10. DESCRIPTION — INSTRUMENT PANEL. The instrument panel is mounted on the respective console and contains all instruments for the pilot and copilot. The instrument panel is mounted by mounting screws located around edge of panel. The instrument panel is rigidly mounted and no adjustments are required.

SECTION I. ENGINE, ROTOR, AND TRANSMISSION INSTRUMENTS

8-11. ENGINE OIL PRESSURE INDICATOR.

8-12. DESCRIPTION — ENGINE OIL PRESSURE INDICATOR. A The engine oil pressure indicator precalibrated in psi against a standard, is located in instrument cluster on instrument panel, and is included in piping circuit from engine oil pressure disconnects. No installation calibration is required.

8-13. DESCRIPTION — ENGINE OIL PRESSURE INDICATOR. C The indicator is part of a dual purpose indicator. The right side is for engine oil pressure and the left side is for engine oil temperature. The indicator is located on the instrument panel, precalibrated in psi against a standard, and is included in piping circuit from engine oil pressure disconnects. No installation calibration is required.

8-14. CLEANING — ENGINE OIL PRESSURE INDICATOR. Clean the indicator in accordance with paragraph 8-3.

8-15. INSPECTION — ENGINE OIL PRESSURE INDICATOR. Inspect the indicator in accordance with paragraph 8-4.

8-16. TESTING — ENGINE OIL PRESSURE INDICATOR.

a. Disconnect pressure gage line from engine port.

b. Connect a variable pressure (**0 to 150** psi) gage (MP-1 or equivalent) (T6) to the pressure gage line.

c. Gradually apply pressure until applied pressure is **130** psi.

d. The engine oil pressure indicator shall indicate **130** (red line) ± **4.5** psi.

e. Replace any indicator that does not meet the above reading.

f. Disconnect pressure gage line from tester and reconnect line to engine port.

8-17. TROUBLESHOOTING — ENGINE OIL PRESSURE INDICATOR. Troubleshoot the indicator in accordance with table 8-1.

NOTE

Before using table 8-1, ensure all normal operational checks have been performed. If a malfunction exists which is not listed in table 8-1, notify the next higher level of maintenance.

8-18. REMOVAL — ENGINE OIL PRESSURE INDICATOR. Remove the indicator from the instrument panel in accordance with paragraph 8-5.

8-19. REPAIR OR REPLACEMENT — ENGINE OIL PRESSURE INDICATOR. Repair or replace the indicator in accordance with paragraph 8-6.

8-20. INSTALLATION — ENGINE OIL PRESSURE INDICATOR. Install the indicator into the instrument panel in accordance with paragraph 8-7.

8-21. TORQUEMETER INDICATOR.

8-22. DESCRIPTION — TORQUEMETER INDICATOR. The engine torquemeter located in instrument panel, is precalibrated in psi against a standard. This instrument is included in piping circuit to lower firewall disconnect which continues to engine accessory drive gearbox (forward side of engine). No calibration of the torquemeter is required when installed.

8-23. CLEANING — TORQUEMETER INDICATOR. Clean the indicator in accordance with paragraph 8-3.

Table 8-1. Troubleshooting — Engine Oil Pressure Indicator and Torquemeter Indicator

CONDITION

TEST OR INSPECTION

CORRECTIVE ACTION

1. Low reading on pressure indicator.

   STEP 1. Obstructed line and/or fitting. Refer to paragraph 8-4.

   Replace or clean line and/or fitting. Refer to paragraph 8-8.

2. Inaccurate or sticking pressure indicator.

   STEP 1. Defective indicator.

   Replace indicator. Refer to paragraph 8-7.

3. Sluggish or fluctuating reading.

   STEP 1. Sludge in pressure line or a twist or sharp bend in the line.

   Bleed line or replace hose. Refer to paragraph 8-8.

8-24. INSPECTION — TORQUEMETER INDICATOR. Inspect the indicator in accordance with paragraph 8-4.

8-25. TESTING — TORQUEMETER INDICATOR.

a. Disconnect pressure gage line from engine inlet.

b. Connect pressure hand gun to the pressure gage line.

c. Using hand gun apply pressure and make several random checks through the full range of the gage. Particular attention should be directed to the red line areas. All readings should be with **±2** psi for the **A**, ±1% for the **C**

	Tester Pressure (psi)	Indicator P/N	Reading
A	100	206-070-268-5	**100** (±2) psi
B	74	206-075-711-1	**100** (±1)% (Red Sawtooth)

d. Replace any indicator that does not meet the above reading.

e. Disconnect pressure gage line from hand gun and reconnect line to engine inlet.

8-26. TROUBLESHOOTING — TORQUEMETER INDICATOR. Troubleshooting procedures for the torquemeter indicator are the same as for the engine oil pressure indicator. Refer to table 8-1.

8-27. REMOVAL — TORQUEMETER INDICATOR. Remove the indicator from the instrument panel in accordance with paragraph 8-5.

8-28. REPAIR OR REPLACEMENT — TORQUEMETER INDICATOR. Repair or replace indicator in accordance with paragraph 8-6.

8-29. INSTALLATION — TORQUEMETER INDICATOR. Install the indicator in the instrument panel in accordance with paragraph 8-7.

8-30. TACHOMETER INDICATING SYSTEM.

8-31. DESCRIPTION - TACHOMETER INDICATING SYSTEM. The rotary self generating tachometer indicating system includes gas producer tachometer generator (G4), gas producer tachometer indicator (M3), and interconnecting wiring; power turbine tachometer generator (G3), power turbine tachometer indicator (part of M1) and interconnecting wiring; rotor tachometer generator (G2); and rotor tachometer indicator (part of M1) and interconnecting wire. Refer to figure F-5.

8-32. DESCRIPTION DUAL TACHOMETER INDICATING SYSTEM C. The tachometer indicating system is protected by the DUAL TACH and GAS PROD TACH circuit breakers and powered by 28Vdc. The system includes gas producer tachometer generator (G4), gas producer tachometer indicator (M3), GAS PROD TACH circuit breaker (CB18), and interconnecting wiring; power turbine tachometer generator (G3), ENGINE-ROTOR tachometer indicator (M1), rotor tachometer generator (G2), DUAL TACH circuit breaker (CB17), and interconnecting wiring, (refer to figure F-25).

8-33. TESTING - DUAL TACHOMETER INDICATING SYSTEM.

Premaintenance Requirements for Testing Tachometer Indicating System

Condition	Requirements
Model	OH-58A/OH-58C
Part No. or Serial No.	All
Special Tools	None
Test Equipment	TTU-27E
Support Equipment	None
Minimum Personnel Required	Two
Consumable Materials	(C31) (C118) (C62) (C77) (C96) (C103) (C137)
Special Environmental Conditions	None

a. Dual Tachometer Indicator (Rotor and N2 Power Turbine Tach Generator). Both rotor and free turbine tachometer sections of the dual tachometer shall be checked in accordance with the following procedure.

(1) Remove plug (P6) from rotor tachometer generator and connect to matching receptacle on the test stand.

(2) Close the DUAL TACH circuit breaker C.

(3) Energize tach generator in test stand. Check that rotor tach pointer, R, on the rotor and turbine indicator reads upscale at the approximate ±1 percent rpm that the test stand tach generator is turning.

(4) Remove plug (P6) from test stand and reconnect to the rotor tach generator on the transmission. Check that connector is properly mated, tight, and secure.

NOTE

To obtain 100% power tubine indications in step 5, the TTU 27E test equipment must be set to 104 % on the master indicator.

(5) Remove plug (P7) from N2 power turbine tach generator and connect to matching receptacle on the test stand. Energize tach generator in the test stand. Check that the turbine tach pointer, T, on the rotor and turbine rpm indicator reads upscale and reads the approximate ± 1 percent rpm at which the test stand tach generator is turning.

(6) Remove plug (P7) from the test stand and reconnect to the matching receptacle on the N2 Power Turbine Tach Generator. Check that connector is properly mated, tight, and secure.

NOTE

The anodize coating was not completely removed from end cop and housing of a number of tachometer generators before rolling lip over end cap. This may cause intermittent grounding of C phase that results in an erratic indication.

This condition can be corrected in the field, without removing tachometer generator from engine, by using an automatic center punch to stake lip to end cap In at least three equally spaced points and then protecting Impact points with primer.

8-34. TROUBLESHOOTING — DUAL TACHOMETER INDICATING SYSTEM. Refer to table 8-2 for probable causes and corrective action in troubleshooting the dual tachometer indicating system.

NOTE

Before using table 8-2, ensure all normal operational checks have been performed. If a malfunction exists which is not listed in table 8-2, notify the next higher level of maintenance.

NOTE

For testing refer to paragraphs 8-33 and 8-48.

Table 8-2. Troubleshooting — Dual Tachometer Indicating System

CONDITION TEST OR INSPECTION	CORRECTIVE ACTION
1. Excessive scale error.	
STEP 1. Weak magnet in tachometer-generator.	**Replace tachometer-generator.**
2. Pointer moves backward.	
STEP 1. Leads reversed at generator.	**Properly connect leads at generator.**
3. No reading on indicator.	
STEP 1. Open or short circuit.	**Repair or replace faulty wiring.**
4. High or low reading on indicator, either constant or intermittent.	
STEP 1. Poor connections at indicator or generator.	**Clean and tighten connections.**
STEP 2. Intermittent ground at generator housing.	**Ensure electrical continuity exists between end cap and housing.**

8-35. DUAL TACHOMETER INDICATOR.

8-36. DESCRIPTION - TACHOMETER INDICATOR. The tachometer indicator is located on the center section of the instrument panel and is a component of the dual tachometer indicating system. The instrument indicator dual inputs from the system generators located on the engine and transmission.

8-37. CLEANING - TACHOMETER INDICATOR. Clean the indicator in accordance with paragraph 8-3.

8-38. INSPECTION - TACHOMETER INDICATOR. Inspect the indicator in accordance with paragraph 8-4.

8-39. TESTING - TACHOMETER INDICATOR. Test the indicator using tachometer tester or equivalent in accordance with paragraph 8-33.

8-40. TROUBLESHOOTING - TACHOMETER INDICATOR. If the indicator does not meet test performance standards, replace the indicator.

8-41. REMOVAL - TACHOMETER INDICATOR. Refer to paragraph 8-5.

8-42. REPAIR OR REPLACEMENT - TACHOMETER INDICATOR. Refer to paragraph 8-6.

CAUTION

When installing dual tachometer assure electrical cable terminals are properly installed to either engine or rotor terminals on instrument. Terminals are identical and may be easily reversed.

8-43. INSTALLATION - TACHOMETER INDICATOR. Refer to paragraph 8-7.

NOTE

Terminals without self-locking cannon plugs require lockwire. Refer to TM 55-1500-323-24.

8-44. ROTOR TACHOMETER GENERATOR.

8-45. DESCRIPTION - ROTOR TACHOMETER GENERATOR. The rotor tachometer generator which transmits rotor rpm is located on the forward left side of the transmission and is connected to the dual tachometer indicator on the instrument panel. The rotor tachometer generator is a component of the dual tachometer indicating system.

8-46. CLEANING - ROTOR TACHOMETER GENERATOR.

a. Remove moisture and loose dirt with a clean, soft cloth.

WARNING

Isopropyl alcohol is flammable and toxic to eyes, skin, and respiratory tract. Wear protective gloves and goggles/face shield. Avoid repeated or prolonged contact. Use only in well-ventilated areas (or use approved respirator as determined by local safety/industrial hygiene personnel). Keep away from open flames, sparks or other sources of ignition.

b. Remove grease, fungus, and ground-in dirt with a clean, lint-free cloth dampened with isopropyl alcohol (C150).

c. Remove dirt from electrical connectors with a bristle brush (C31).

8-47. INSPECTION - ROTOR TACHOMETER GENERATOR.

a. Inspect tachometer generator case for cracks, excessive wear, or any visible damage.

b. Check connector for damaged or bent pins and cracked inserts.

c. Check that rotor turns freely and there is no visible indication of excessive wear to bearings.

8-48. TESTING - ROTOR TACHOMETER GENERATOR A .

a. Check interconnecting wiring between the Rotor Tachometer Generator and the Tachometer indicator. Refer to figure F-5 and proceed as follows:

(1) Check continuity of wiring between rotor tachometer generator connector plug (P6) and tachometer indicator connector plug (P2), pin A to A and pin B to B respectively.

(2) The ohmmeter shall read less than 1 ohm in each of the readings.

b. Place ohmmeter leads accordingly:

(1) Between pins A and B on tachometer generator connector pins.

(2) Between pin A and tachometer generator case.

(3) Between pin B and tachometer generator case.

c. There shall be no evidence of discontinuity. The resistance between pins or between a pin and the case shall be less than fifty (50) ohms. The measurements shall be within two (2) ohms of each other.

d. Rotate the tachometer rotor by hand to determine that rotor rotates freely.

8-49. TESTING — ROTOR TACHOMETER GENERATOR C . Follow the same general procedures given in paragraph 8-48 and proceed as follows:

a. Refer to figure F-25 and check continuity of wiring between generator connector plug (P6) and indicator connector plug (P55), pin A to pin C and from ground on generator to pin D respectively.

b. Check winding in generator by placing ohmmeter leads across pin A and ground on generator. Refer to figure F-25.

NOTE

If generator does not meet performance standards listed in steps b, c, and d, replace tachometer generator.

8-50. REMOVAL — ROTOR TACHOMETER GENERATOR.

a. Disconnect electrical connector and protect end with plastic cap.

b. Remove hydraulic pump. Refer to paragraph 7-13.

c. Remove nuts (9) and washers (8) from mounting studs. Remove generator (7) and gasket (20). Refer to figure 6-10.

8-51. REPAIR OR REPLACEMENT — ROTOR TACHOMETER GENERATOR. Replace tachometer if inspection and test requirements are not met. Refer to paragraphs 8-47, 8-48, and 8-49.

8-52. INSTALLATION — ROTOR TACHOMETER GENERATOR.

a. Thoroughly clean the generator drive and mating transmission oil pump flange. Apply a film of grease (C77) to the drives.

b. Position serviceable gasket and generator (7) on the oil pump mounting studs and secure with washers (8) and nuts (9).

c. Install hydraulic pump. Refer to paragraph 7-19.

d. Remove plastic cap from electrical plug and connector to generator.

8-53. POWER TURBINE TACHOMETER GENERATOR.

8-54. DESCRIPTION — POWER TURBINE TACHOMETER GENERATOR. The power turbine tachometer generator (39, figure 4-1) which transmits engine output shaft rpm is mounted on the forward left side of the power and accessory gearbox and connected to the dual tachometer indicator on the instrument panel. The power turbine tachometer generator is a component of the dual tachometer indicating system.

8-55. CLEANING — POWER TURBINE TACHOMETER GENERATOR. Refer to paragraph 8-46.

8-56. INSPECTION — POWER TURBINE TACHOMETER GENERATOR. Refer to paragraph 8-47.

8-57. TESTING POWER TURBINE TACHOMETER GENERATOR A . Follow the same general procedures given in paragraph 8-48. Refer to F-5 and proceed as follows:

a. Check continuity of wiring between generator connector plug (P7) and indicator connector plug (P1), pin B to pin A and pin A to pin B respectively.

b. Place ohmmeter leads accordingly:

(1) Between pins A and B on tachometer generator connector pins.

(2) Between pin A and tachometer generator case.

(3) Between pin B and tachometer generator case.

8-58. DELETED.

8-59. REMOVAL — POWER TURBINE TACHOMETER GENERATOR.

a. Disconnect electrical connector; protect connector with plastic cap.

b. Remove four nuts and washers from mounting studs and remove generator (39, figure 4-1) and gasket from accessory pad.

8-60. REPAIR OR REPLACEMENT — POWER TURBINE TACHOMETER GENERATOR. Replace tachometer if inspection and/or test requirements are not met. Refer to paragraphs 8-47 and 8-48.

8-61. INSTALLATION — POWER TURBINE TACHOMETER GENERATOR.

a. Thoroughly clean the generator drive and mating engine drive. Apply a film of grease (C77) to the drives.

b. Position gasket and generator on accessory pad studs and secure with four washers and nuts.

c. Remove plastic cap from electrical plug and connect to generator.

8-62. GAS PRODUCER TACHOMETER INDICATOR.

8-63. DESCRIPTION — GAS PRODUCER TACHOMETER INDICATOR. The indicator is a component of the tachometer indicating system. The indicator is used for indicating inputs from the gas producer tachometer generator mounted on the forward right side of the power and accessory gearbox.

8-64. CLEANING — GAS PRODUCER TACHOMETER INDICATOR. Clean the indicator in accordance with paragraph 8-3.

8-65. INSPECTION — GAS PRODUCER TACHOMETER INDICATOR. Refer to paragraph 8-4.

8-66. TESTING — GAS PRODUCER TACHOMETER INDICATOR (N1). With engine running, monitor percent rpm indicator of exhaust gas temperature tester (T3) and compare with N1 tachometer indicator installed in the instrument panel. When the N1 tachometer generator is rotating at 4212 rpm A **4200** rpm C, both tachometer indicators should indicate **100%**. EGT test rpm indicator and N1 indicator should correspond with **3%**.

NOTE

The gas producer tachometer should be bench tested using the TTU27 test set. The indicator shall read 100% when the tach generator input is 4200+-43 rpm for the T63-A-720 engine or 4212-+43 rpm for aircraft with the T63-A-700 engine.

8-67. TROUBLESHOOTING — GAS PRODUCER TACHOMETER INDICATOR. Refer to table 8-3 for probable causes and corrective action in troubleshooting gas producer tachometer.

NOTE

Before using table 8-3, ensure all normal operational checks have been performed. If a malfunction exists which is not listed In table 8-3, notify the next higher level of maintenance.

8-68. REMOVAL — GAS PRODUCER TACHOMETER INDICATOR. Refer to paragraph 8-5.

8-69. REPAIR OR REPLACEMENT — GAS PRODUCER TACHOMETER INDICATOR. Refer to paragraph 8-6.

NOTE

Lockwire is required for the terminal. Refer to TM 55-1500-323-25.

8-70. INSTALLATION — GAS PRODUCER TACHOMETER INDICATOR. Refer to paragraph 8-7.

8-71. GAS PRODUCER TACHOMETER GENERATOR.

8-72. DESCRIPTION — GAS PRODUCER TACHOMETER GENERATOR. The gas producer tachometer generator is mounted on the forward right side of the power and accessory gearbox (39, figure 4-1). The gas producer tachometer is a component of the tachometer indicating system.

8-73. CLEANING — GAS PRODUCER TACHOMETER GENERATOR.

a. Remove moisture and loose dirt with a clean, soft cloth.

WARNING

Isopropyl alcohol is flammable and toxic to eyes, skin, and respiratory tract. Wear protective gloves and goggles/face shield. Avoid repeated or prolonged contact. Use only in well-ventilated areas (or use approved respirator as determined by local safety/industrial hygiene personnel). Keep away from open flames, sparks or other sources of ignition.

b. Remove grease, fungus and ground-in-dirt with a clean, lint-free cloth dampened with isopropyl alcohol (C150).

Table 8-3. Troubleshooting — Gas Producer Tachometer

CONDITION / TEST OR INSPECTION	CORRECTIVE ACTIVE
1. Gas producer tachometer fails to respond.	
STEP 1. Determine if tach generator is defective by substitution of known good tach generator. Check tach generator IAW 8-75.b, A Model and 8-76.b, C Model. Test IAW paragraph 8-66.	**Replace tach generator if defective. Refer to paragraphs 8-77 and 8-79.**
STEP 2. Determine if tachometer is defective by substitution of known good tachometer and test IAW paragraph 8-66.	
STEP 3. Determine continuity of wiring between tach generator and indicator. Check continuity of wiring IAW paragraph 8-75.a, A model and 8-76.a, C Model.	**Replace tachometer if defective. Refer to paragraph 8-7.**
2. Gas producer tachometer indicates incorrectly.	
STEP 1. Determine if tach generator is defective by substitution of known good tach generator. Check tach generator IAW 8-75.b., A Model and 8-76.b, C Model. Test IAW paragraph 8-66.	**Replace generator if defective. Refer to paragraphs 8-77 and 8-79.**
STEP 2. Determine if tachometer is defective by substitution of known good tachometer and test IAW paragraph 8-66.	**Replace tachometer if defective. Refer to paragraph 8-7.**
STEP 3. Determine continuity of wiring between tach generator and indicator. Check continuity of wiring IAW paragraph 8-75-a. A Model and 8-76.a. C Model.	
3. Gas producer tachometer indicates backwards.	
STEP 1. Check if wires are reversed at pins of tachometer generator plug. Refer to paragraph 8-74.	**Remove plug and reverse wires. Refer to paragraph 8-74.**

c. Remove dirt from electrical connectors with a bristle brush (C31).

8-74. INSPECTION — GAS PRODUCER TACHOMETER GENERATOR.

a. Inspect tachometer generator case for cracks, excessive wear, or any visible damage.

b. Check connector for damaged or bent pins and cracked inserts.

c. Check that rotor turns freely and there is not visible indication of excessive wear to bearings.

8-75. TESTING — GAS PRODUCER TACHOMETER GENERATOR A. Follow the same general procedures given in paragraph 8-48 and proceed as follows:

a. Refer to figure F-5 and check continuity of wiring between this tachometer generator connector plug (P10) and the indicator connector plug (P3), pin A to pin B and pin B to pin A respectively.

b. Check winding in generator by placing ohmmeter leads across pins A and B in the generator.

8-76. TESTING — GAS PRODUCER TACHOMETER GENERATOR C. Follow the same general procedures given in paragraph 8-48 and proceed as follows:

a. Refer to figure F-25 and check continuity of wiring between generator connector plug (P10) and the gas producer tachometer indicator connector plug (P3), pin A to pin A, and from ground on generator to pin B on indicator connector plug.

b. Check winding in the generator by placing ohmmeter leads across pin A in generator and ground on generator.

8-77. REMOVAL — GAS PRODUCER TACHOMETER GENERATOR.

a. Disconnect electrical connector and protect end with plastic cap.

b. Remove four nuts and washers from mounting studs and remove generator and gasket from accessory pad. Remove ground wire from stud and protect terminal.

8-78. REPAIR OR REPLACEMENT — GAS PRODUCER TACHOMETER GENERATOR. Replace tachometer generator if inspection and test requirements are not met.

8-79. INSTALLATION — GAS PRODUCER TACHOMETER GENERATOR.

a. Thoroughly clean the generator drive and mating engine drive. Apply a film of grease (C77) to the drives.

b. Position gasket and generator on accessory pad studs and secure with four washers and nuts. Install ground wires on studs.

c. Remove plastic cap from electrical plug and connect to generator.

d. Test gas producer tachometer in accordance with paragraph 8-66.

8-80. SENSOR, RPM.

8-81. DESCRIPTION — SENSOR, RPM. The RPM sensors located on equipment shelf right side, just aft of the engine out audio generator, receives and interprets output signals from the N1 and rotor tachometer generators. Should the gas producer (N1) fall below **55% (±3)%**, one side of the RPM sensor serves to complete circuits to the engine out audio generator and engine out warning light simultaneously to alert the pilot of engine failure. (Should the rotor RPM, fall below **335** RPM plus or minus **5** RPM **A** , **95%** plus or minus **1.4%** **C** , the other side of the RPM sensor serves to complete circuits to the rotor rpm warning light and audio generator simultaneously to alert the pilot of low rotor rpm). An engine out warning switch (S70) enables the pilot to prevent audio warning in the headset while helicopter is in a nonflight status by placing collective in down position.

8-82. CLEANING — SENSOR, RPM. Clean the sensor case with a suitable lint-free cloth.

8-83. INSPECTION — SENSOR, RPM.

a. Visually inspect sensor case for dents or physical damage that could impair normal efficient operation of the unit.

b. Inspect sensor receptacle for bent or broken contacts, pins, cracked insert, or damage to connector threads.

c. Replace sensor if it fails to meet inspection requirements.

8-84. TESTING — SENSORS, RPM. Refer to figure F-12 and proceed as follows:

a. To test engine out RPM sensor. Disconnect rotor sensor.

b. Start engine. Refer to TM 55-1520-228-10.

c. Raise collective approximately 1 inch. Check to see that the light and audio go out at **55 (±3)%** when rpm is increased and illuminates **55 (±3)%** when rpm is decreased.

d. Shut down engine.

e. To test rotor RPM sensor: Disconnect engine RPM sensor, reconnect RPM sensor.

f. Start engine.

g. Raise collective 1 inch. Check to see that the light and audio go out at **335 (±5)** rpm **A** , **95% (±1.4%)** **C** , as rpm is decreased.

h. Adjust rotor RPM sensor as required.

i. Shut down engine.

j. Reconnect engine RPM sensor.

8-85. REMOVAL — SENSOR, RPM.

a. Check that all electrical power is OFF.

b. Disconnect electrical connector and cover plug and receptacle for protection using cap or with electrical tape (C137).

c. Remove mounting screws and washers and lift sensor from equipment shelf.

8-86. REPAIR OR REPLACEMENT — SENSOR, RPM. Replace the sensor if it fails to meet inspection or test requirements.

8-87. INSTALLATION — SENSOR, RPM.

NOTE

Determine that power is disconnected from helicopter.

a. Position sensor on equipment shelf and install mounting screws and washers.

b. Remove covers from sensor plug and receptacle. Engage and secure connectors.

c. Apply power to helicopter.

d. If operational check fails to give proper response, perform test procedures in paragraph 8-84.

8-88. ENGINE OUT WARNING SWITCH.

8-89. DESCRIPTION — ENGINE OUT WARNING SWITCH. The engine out warning switch disconnects audio warning from the pilot headset when the helicopter is in a nonflight status.

NOTE

Audio warning input to the headset may be disconnected by placing the collective stick in down position.

8-90. INSPECTION — ENGINE OUT WARNING SWITCH.

NOTE

Determine that power is disconnected from helicopter before performing maintenance procedures on switch.

a. Remove copilot seat and seat panel. Refer to paragraphs 2-79 and 2-86.

b. Visually inspect switch for physical damage that could impair normal operation; check switch for security.

c. Check spring action of the switch by repositioning the switch.

8-91. REMOVAL — ENGINE OUT WARNING SWITCH.

a. Remove copilot seat and seat panel. Refer to paragraphs 2-86 and 2-79.

b. Remove two screws attaching engine out warning switch to mounting bracket beneath collective jackshaft in void beneath copilot seat.

c. Disconnect electrical wires and remove switch.

8-92. REPAIR OR REPLACEMENT — ENGINE OUT WARNING SWITCH. Replace switch if it fails to meet inspection requirements.

8-93. INSTALLATION — ENGINE OUT WARNING SWITCH.

a. Attach electrical wires and install switch with two screws to bottom of mounting bracket beneath collective jackshaft in void beneath copilot seat.

b. Loosen clamp and striker arm on jackshaft and position so that when collective is full down, striker arm depresses engine out warning switch.

c. Check engine OUT warning switch with battery on. Audio should be heard through pilot/copilot headset when collective is raised approximately 1 inch.

d. Install copilot seat pan and seat. Refer to paragraph 2-88.

8-94. ENGINE OIL TEMPERATURE SYSTEM.

8-95. DESCRIPTION — ENGINE OIL TEMPERATURE SYSTEM. The temperature system includes engine oil temperature indicator, engine oil temperature bulb, and interconnecting wiring.

8-96. TROUBLESHOOTING — ENGINE OIL TEMPERATURE SYSTEM. Troubleshoot the engine oil temperature system in accordance with table 8-4.

NOTE

Before using table 8-4, ensure all normal operational checks have been performed. If a malfunction exists which is not listed in table 8-4, notify the next higher level of maintenance.

Table 8-4. Troubleshooting — Engine Oil Temperature System

CONDITION / TEST OR INSPECTION	CORRECTIVE ACTION
1. Indicator fails to operate.	
STEP 1. Check for open or defective instrument cluster A or engine oil temperature C circuit breaker.	**Replace faulty circuit breaker.**
STEP 2. Check for faulty or loose connection. Refer to figure F-7 A or figure F-27 C .	**Replace faulty wiring and tighten connections. Refer to figure F-7 A or figure F-27 C .**
STEP 3. Check for defective temperature bulb. Refer to paragraph 8-109.	**Replace bulb. Refer to paragraph 8-113.**
STEP 4. Check for defective indicator. Refer to paragraph 8-101.	**Replace indicator. Refer to paragraph 8-7.**

8-97. ENGINE OIL TEMPERATURE INDICATOR.

8-98. DESCRIPTION — ENGINE OIL TEMPERATURE INDICATOR. A The indicator is located on the instrument panel as a part of the instrument cluster.

8-99. DESCRIPTION — ENGINE OIL TEMPERATURE INDICATOR. C The indicator is part of a dual purpose indicator. The right side is for engine oil pressure and the left side is for engine oil temperature. The indicator is located on the instrument panel.

8-100. CLEANING — ENGINE OIL TEMPERATURE INDICATOR. Refer to paragraph 8-3.

8-101. INSPECTION — ENGINE OIL TEMPERATURE INDICATOR. Refer to paragraph 8-4.

8-102. TESTING — ENGINE OIL TEMPERATURE INDICATOR. Check that engine oil temperature indicator reads approximately ambient temperature provided that helicopter has not been previously ground run or moved from a different temperature location (hangar to ramp, etc.)

8-103. REMOVAL — ENGINE OIL TEMPERATURE INDICATOR. Refer to paragraph 8-5.

8-104. REPAIR OR REPLACEMENT — ENGINE OIL TEMPERATURE INDICATOR. Refer to paragraph 8-6.

8-105. INSTALLATION — ENGINE OIL TEMPERATURE INDICATOR. Refer to paragraph 8-7.

8-106. ENGINE OIL TEMPERATURE TRANSMITTER BULB.

8-107. DESCRIPTION — ENGINE OIL TEMPERATURE TRANSMITTER BULB. The engine oil temperature bulb, installed in the outlet fitting of the engine oil tank is a resistance type thermobulb which monitors engine oil temperature and transmits varying voltage signals to engine oil temperature portion of indicator. The resistance element of the bulb is hermetically sealed in a metal well.

8-108. CLEANING — ENGINE OIL TEMPERATURE TRANSMITTER BULB.

a. Remove moisture and loose dirt with a clean, soft cloth.

WARNING

Isopropyl alcohol is flammable and toxic to eyes, skin, and respiratory tract. Wear protective gloves and goggles/face shield. Avoid repeated or prolonged contact. Use only in well-ventilated areas (or use approved respirator as determined by local safety/industrial hygiene personnel). Keep away from open flames, sparks or other sources of ignition.

b. Remove oil, grease, fungus, and ground-in dirt with a clean, lint-free cloth dampened with isopropyl alcohol (C150).

c. Remove dirt from electrical connectors with a bristle brush (C31).

8-109. INSPECTION — ENGINE OIL TEMPERATURE TRANSMITTER BULB.

a. Inspect temperature bulb for cracks, leaks, security, and proper mounting.

b. Inspect electrical connector for damaged or bent pins and cracked inserts.

8-110. REMOVAL — ENGINE OIL TEMPERATURE TRANSMITTER BULB.

a. Cut lockwire and disconnect electrical connector.

b. Remove lockwire and unscrew temperature bulb from oil manifold.

c. Remove gasket.

8-111. REPAIR — ENGINE OIL TEMPERATURE TRANSMITTER BULB.

a. Repair damaged electrical connectors.

b. Replace damaged or worn gasket.

c. Replace temperature bulb if cracked or damaged.

8-112. FUNCTIONAL TEST — ENGINE OIL TEMPERATURE BULB — BENCH (AVIM).

a. Resistance check.

(1) Remove oil temperature bulb to be checked and allow sufficient time to adjust to ambient temperature.

(2) With Wheatstone bridge, measure resistance of temperature bulb between pin A and B. Ambient temperature test points and tolerances are shown in table 8-5.

b. Insulation Leakage Test. With temperature bulb subjected to a 100 volt potential between any electrical pin and bulb housing, the minimum resistance shall be 5 megohms.

c. Reinstall temperature bulb.

8-113. INSTALLATION — ENGINE OIL TEMPERATURE TRANSMITTER BULB.

a. Coat threads and gasket with lubricating oil (C103) when installing gasket on temperature bulb.

b. Install temperature bulb and gasket in manifold. Lockwire (C96).

c. Install electrical connector.

d. Lockwire (C96) adjacent bolt head on manifold to electrical connector.

Table 8-5. Resistance Bulbs

BULB TYPE — MS28034-3		
AMBIENT TEMPERATURE TEST POINT DEGREES	**RESISTANCE (OHMS)**	**RESISTANCE TOLERANCE (OHMS)**
-20° Celsius (-4°F)	83.77	±0.4
-10° Celsius (14°F)	87.04	±0.4
0° Celsius (32°F)	90.38	±0.4
+10° Celsius (50°F)	93.80	±0.4
+20° Celsius (68°F)	97.31	±0.4
+30° Celsius (86°F)	100.91	±0.4
+40° Celsius (104°F)	104.60	±0.4

8-114. TROUBLESHOOTING — ENGINE OIL TEMPERATURE TRANSMITTER BULB. Refer to table 8-4 and paragraph 8-112.

8-115. TURBINE OUTLET TEMPERATURE SYSTEM A .

8-116. DESCRIPTION — TURBINE OUTLET TEMPERATURE SYSTEM. The turbine outlet temperature system is thermocouple self generating and consists of four bayonet type thermocouples mounted in turbine outlet, one turbine outlet temperature resistor, one turbine outlet temperature indicator, one terminal board and interconnecting wiring. Refer to figure F-7.

8-117. TESTING — TURBINE OUTLET TEMPERATURE SYSTEM.

Premaintenance Requirements for Testing Turbine Outlet Temperature System

Condition	Requirements
Model	OH-58A
Part No. or Serial No.	All
Special Tools	None
Test Equipment	(T3) (T2) (T54) (T55) (T56)
Support Equipment	General Mechanics Tool Box
Minimum Personnel Required	Two
Consumable Materials	(C120) (C31) (C62) (C95)
Special Environmental Conditions	Stabilize TOT for one hour

a. Sequential testing. Accomplish the following sequential steps to isolate and correct the source or cause of defective TOT indicating system.

(1) Check all electrical connections for security of attachment and absence of corrosion. If no problem is found, proceed.

CAUTION

When turbine outlet temperature indicator is removed, the instrument terminals shall be short circuited with a piece of copper wire to prevent induced electrical damage. Remove wire before reinstallation.

(2) Remove TOT indicator from panel and check indicator accuracy at **693°C** (beginning of yellow arc), **749°C** (red line), and **927°C** (red dot) using Jet-Cal analyzer (refer to TM 55-4920-244-14 or TM 55-4920-401-13&TM 55-4920-401-13P).

Indicator shall read within **±5°C (9°F)** at **693°C** and **749°C** and within **±30°C (54°F)** at **927°C**. Maximum accuracy is required at the **749°C** reading. If minimum error is not obtained at this point, calibrate again to obtain a minimum error reading at **749°C** by turning zero adjusting screw located on back of indicator and then rechecking for within tolerance readings at the **693°C** and **927°C** points. If indicator has helicopter manufacturers functional stamp, check indicator calibration against the following procedures.

(a) Increase degree scale of analyzer to indicate a test temperature of **1000°C**. The temperature variation between the analyzer setting and TOT indicator must be within **±30°C (54°F)**.

(b) After completion of adjustment, apply a small amount of retaining compound (C120) to adjusting screws.

NOTE

To ensure best results, instrument should be subjected to a constant room temperature for at least 1 hour. If TOT indicator readings are in excess of allowable tolerances, replace indicator.

(3) If indicator accuracy is confirmed, check the total airframe/engine circuit resistance as follows:

(a) Check circuit resistance using the Jet-Cal analyzer. (Refer to TM 55-4920-244-14.) Resistance indicator should be **8 (±0.05)** ohms.

NOTE

For best results, both cockpit air temperature and outside air temperature should be the same.

(b) If the total TOT circuit resistance is not **8(±0.05)** ohms, adjust thermocouple resistor spool to obtain the required resistance. Refer to paragraph 8-130.

(4) Test turbine outlet temperatures system with T63-A-720 installed as follows:

(a) Connect indicator to test set and check indicator accuracy at **738°C** (beginning of yellow arc), **810°C** (red line), and **927°C** red dot. The indicator shall read within **±5°C** at **738°C** and **810°C**, and within **±30°C** at **927°C**. Maximum accuracy is required at the **810°C** reading. If minimum error is not obtained at this point, re-calibrate to obtain minimum error reading at **810°C** by turning the "zero" adjustment screw located on the back of the indicator and then rechecking for within tolerance readings at the **738°C** and **810°C**, and **927°C** points.

(b) Increase degree scale of analyzer to indicate a test temperature of **1000°C**. Temperature variation between the analyzer setting and the indicator must be within **±30°C**.

(c) After completion of adjustment, apply a small amount of retaining compound, PN 08031, Grade E, to the adjusting screw.

b. For additional testing information refer to TM 55-2840-241-23.

c. Install turbine out temp indicator (refer to paragraph 8-127.

8-118. TROUBLESHOOTING — TURBINE OUTLET TEMPERATURE SYSTEM.

CAUTION

The TOT system contains alumel and chromel wire and terminals. Repair items must be of the same material. Connections at the engine disconnect (TB3) are silver soldered. All other connections may be crimp or solder type. Refer to TM 55-1500-323-24 for general requirements.

NOTE

Before using table 8-6, ensure all normal operational checks have been performed. If a malfunction exists which is not listed in table 8-6, notify the next higher level of maintenance.

8-119. TURBINE OUTLET TEMPERATURE (TOT) INDICATOR A .

8-120. DESCRIPTION — TURBINE OUTLET TEMPERATURE INDICATOR. The turbine outlet temperature indicator receives temperature indications from bayonet-type thermocouples mounted in the turbine outlet. The indicator is graduated in degrees centigrade and electrical power is not required as the system is self-generating. Throughout TOT indicator maintenance procedures, if a Jet-Cal analyzer is specified, refer to TM 55-4920-244-14 for operation and maintenance instructions for the analyzer.

8-121. CLEANING — TURBINE OUTLET TEMPERATURE INDICATORS. Refer to paragraph 8-3.

8-122. INSPECTION — TURBINE OUTLET TEMPERATURE (TOT) INDICATOR. Refer to paragraph 8-4.

8-123. TESTING — TURBINE OUTLET TEMPERATURE (TOT) INDICATOR. Refer to paragraph 8-115.

8-124. TROUBLESHOOTING — TURBINE OUTLET TEMPERATURE (TOT) INDICATOR. Refer to paragraph 8-118 and table 8-6.

8-125. REMOVAL — TURBINE OUTLET TEMPERATURE (TOT) INDICATOR. Refer to paragraph 8-5.

CAUTION

When turbine outlet temperature indicator is removed, the instrument terminals shall be short circuited with a piece of copper wire to prevent induced electrical damage. Remove wire before reinstallation.

8-126. REPAIR OR REPLACEMENT — TURBINE OUTLET TEMPERATURE (TOT) INDICATOR. Replace indicator that

Table 8-6. Troubleshooting — Turbine Outlet Temperature System (TOT)

CONDITION

TEST OR INSPECTION

CORRECTIVE ACTION

1. Indicator shows excessive temperature (incorrect reading).

   STEP 1. Loose connectors.

   Tighten connectors.

   STEP 2. Incorrect circuit resistance. Refer to paragraph 8-117.

   Check and set resistance. Refer to paragraph 8-117.

   STEP 3. Defective indicator. Refer to paragraphs 8-4 and 8-123.

   Replace indicator. Refer to paragraph 8-7.

2. No reading on indicator.

   STEP 1. Loose connections on indicator lead spool resistor terminal block. Refer to paragraphs 8-123 and 8-130.

   Clean and tighten connections.

   STEP 2. Open circuit in indicator.

   Replace indicator. Refer to paragraph 8-7.

3. Incorrect reading.

   STEP 1. Harness not calibrated to 8 ohms.

   Calibrate harness to 8 ohms. Refer to paragraph 8-123.

4. Higher than normal temperature.

   STEP 1. Check for leaking in the flexible portion of tube assembly (44, figure 4-1).

   Replace defective tube assembly.

   STEP 2. Check all bleed air lines, fittings, and connections for leaks.

   Replace defective parts or tighten connections.

does not meet inspection and/or test requirements. Prior to installation, calibrate indicator per instructions and test points of paragraph 8-117a.(2) and 8-117a.(2)(a).

8-127. INSTALLATION — TURBINE OUTLET TEMPERATURE (TOT) INDICATOR. Refer to paragraph 8-7 and CAUTION of paragraph 8-125.

8-128. THERMOCOUPLE RESISTOR.

8-129. DESCRIPTION — THERMOCOUPLE RESISTOR. The thermocouple resistor spool located on the electrical shelf is used in conjunction with the turbine outlet temperature indicator and enables selection of the proper operating resistance of the indicator circuit. The spool is mounted on a board along with a spare spool. The spool is a part of the TOT circuit. Varying the length of the wire on this spool will change the turbine outlet temperature (TOT), circuit resistance.

8-130. ADJUSTMENT/REPLACEMENT — THERMOCOUPLE RESISTOR.

NOTE

The loop resistance of the wire on the spool is 7 ohms for each 25 feet or approximately 0.02 ohms per inch of wire.

a. Access to the spool resistor is gained as follows:

(1) Remove safety wire.

(2) Unlatch and remove resistor cover.

b. If TOT circuit resistance was in excess of **8.05** ohms, proceed as follows:

(1) Unsolder one end of the resistor winding from the terminal lug.

NOTE

New spool resistors have only one end of the winding soldered to a terminal. The other end is free to permit adjustment upon installation.

(2) Unwind a turn or two of wire at a time and scrape off the insulation. Touch the bare wire to the terminal and check TOT circuit resistance. When resistance is between **7.95** and **8.05** ohms, solder wire to terminal.

c. If TOT circuit resistance was less than **7.95** ohms, replace resistor spool as follows:

(1) If spare resistor spool remains, unsolder old resistor spool connection and solder spare resistor spool into circuit, following above procedure to obtain correct circuit resistance.

(2) If no spare resistor spool remains, a new spool resistor assembly must be installed.

(3) Remove thermocouple leads.

(4) Remove attachment screws, nuts, and washers.

(5) Remove and replace spool resistor assembly.

(6) Replace attaching hardware.

(7) Replace thermocouple leads.

d. Repeat adjustment/replacement procedures as necessary to obtain the **8.00 (±0.05)** ohm TOT circuit resistance reading.

8-131. INSTALLATION — THERMOCOUPLE RESISTOR.

a. Position resistor in helicopter and install two attaching screws, nuts, and washers.

b. Connect thermocouple leads to resistor terminals.

c. Install resistor cover.

d. Lockwire (C95) cover fasteners.

8-132. TURBINE OUTLET TEMPERATURE INDICATING SYSTEM C.

8-133. DESCRIPTION — TURBINE OUTLET TEMPERATURE INDICATING SYSTEM. The turbine outlet temperature indicating system is protected by a TURB OUTLET TEMP circuit breaker and powered by 28 Vdc and a self-generating thermocouple system consisting of four bayonet type thermocouples

mounted in turbine outlet, turbine outlet temperature indicator (an electronic bridge circuit is included in the indicator, which eliminates the need for a resistance spool in the thermocouple circuit), and interconnecting wiring. Refer to figure F-27.

NOTE

The resistance spool is still part of the turb outlet temp circuit, but the resistance spool does not require any adjustment.

8-134. TESTING — TURBINE OUTLET TEMPERATURE INDICATING SYSTEM.

NOTE

The operating instructions are located on a placard attached to the Jet-Cal analyzer cover.

a. Disconnect plug (P50) from turbine outlet temperature indicator and connect the indicator to the Jet-Cal analyzer.

b. Check the indicator in accordance with P.

c. Check indicator at **738°C** (beginning of yellow arc) and at **810°C** (red line), **927°C** (maximum). The indicator shall be within **±5°C** of the applicable check temperature.

d. Disconnect plug (P12) from receptacle (J12) in thermocouple harness. Connect a Jet-Cal analyzer to pins A and B of (P12). Measure the resistance of the engine thermocouple loop. Resistance shall be **1.3 to 1.9** ohms.

NOTE

If the resistance is not obtained, refer to TM 55-2840-241-23, page 7-7, paragraph 7-15.c.

e. Remove Jet-Cal analyzer and reconnect plug (P12). Ensure that connector is properly mated and secure.

f. Connect Jet-Cal analyzer to (P50). Measure resistance of entire thermocouple harness. Total circuit resistance shall be **7 to 100** ohms.

g. Remove Jet-Cal analyzer and reconnect (P50) to the indicator. Ensure that connector is properly mated and secure.

8-135. TROUBLESHOOTING — TURBINE OUTLET TEMPERATURE INDICATING SYSTEM. Refer to table 8-7.

CAUTION

The TOT system contains alumel and chromel wire and terminals. Repair items must be of the same material. Connections at the engine disconnect (TB3) are silver soldered. All other connections may be crimp or solder type. Refer to TM 55-1500-323-24 for general requirements.

NOTE

Before using table 8-7, ensure all normal operational checks have been performed.

8-136. TURBINE OUTLET TEMPERATURE INDICATOR C.

8-137. DESCRIPTION — TURBINE OUTLET TEMPERATURE INDICATOR. The indicator displays turbine outlet temperature in degrees centigrade. Power to energize an internal bridge circuit in the indicator is from the 28Vdc TURB OUTLET TEMP circuit breaker.

8-138. CLEANING — TURBINE OUTLET TEMPERATURE INDICATORS. Refer to paragraph 8-3.

8-139. INSPECTION — TURBINE OUTLET TEMPERATURE INDICATOR. Refer to paragraph 8-4.

8-140. TESTING — TURBINE OUTLET TEMPERATURE INDICATOR. Refer to paragraph 8-134.

8-141. TROUBLESHOOTING — TURBINE OUTLET TEMPERATURE INDICATOR. Refer to paragraph 8-135.

8-142. REMOVAL — TURBINE OUTLET TEMPERATURE INDICATOR. Refer to paragraph 8-5.

8-143. REPAIR OR REPLACEMENT — TURBINE OUTLET TEMPERATURE INDICATOR. Replace indicator that does not meet inspection and/or test requirements.

8-144. INSULATION — TURBINE OUTLET TEMPERATURE INDICATOR. Refer to paragraph 8-7.

Table 8-7. Troubleshooting — Turbine Outlet Temperature Indicating System C

CONDITION	TEST OR INSPECTION	CORRECTIVE ACTION
1. No reading on indicator.		
	STEP 1. Check for defective TURB OUTLET TEMP circuit breaker.	
		Replace circuit breaker.
	STEP 2. Loose connection or broken wires.	
		Tighten connection or repair wires.
	STEP 3. Defective indicator. Refer to paragraph 8-134.	
		Replace indicator. Refer to paragraphs 8-142 and 8-144.
	STEP 4. Defective thermocouple.	
		Check thermocouple circuit. Refer to paragraph 8-134.
2. Incorrect reading.		
	STEP 1. Defective indicator. Refer to paragraph 8-134.	
		Replace indicator. Refer to paragraphs 8-142 and 8-144.
	STEP 2. Defective thermocouple.	
		Check thermocouple circuit. Refer to paragraph 8-134.

SECTION II. FLIGHT INSTRUMENTS

8-145. PITOT-STATIC SYSTEM.

8-146. DESCRIPTION — PITOT-STATIC SYSTEM. The pitot-static system (figure 8-1) consists of the electrically heated pitot tube, two static ports, pitot and static drains, and pitot and static lines necessary to connect to the proximity warning system, airspeed indicator, altimeter, and vertical speed indicator. The pitot tube is located in the most forward part of the cabin nose bubble. Refer to TM 11-1520-228-20 **A** and TM 11-1520-228-20-1 **C** for proximity warning system information.

8-147. TROUBLESHOOTING — PITOT-STATIC SYSTEM. Refer to applicable portions of airspeed indicator altimeter, and vertical speed indicator troubleshooting, procedures.

8-148. PITOT-STATIC PIPING AND FITTINGS.

8-149. DESCRIPTION — PITOT-STATIC PIPING AND FITTINGS. The pitot-static piping and fittings consists of flexible piping lines routed from the pitot tube and static ports to the proximity warning system, airspeed indicators, altimeters, and vertical speed indicator. The piping lines are connected with fittings and contain a pitot drain and static drain. Refer to figure 8-1 for equipment location.

NOTE

A functional check of the pitot static system and pitot static instruments will be preformed following any opening and closing of the pitot static system, except for the use of the system drain.

8-150. CLEANING — PITOT-STATIC PIPING AND FITTINGS.

a. Remove caps and open pitot drain valve and static drain valve.

b. Disconnect pitot and static lines from proximity warning panel airspeed indicators and static lines from altimeters and vertical velocity indicator. Cap openings in indicators and pressure transducer to prevent entrance of foreign material. To prevent damage to components, use figure 8-1 as a guide.

c. Slowly apply low dry pressure to one of the disconnected static lines in the cockpit and at the same time, watch all the indications for evidence of any indicator still being connected to the static system.

d. When it is determined all instruments are disconnected, increase the pressure to blow out lines.

e. Clean out static port holes.

f. Reconnect all lines.

g. Close pitot and static drain valves and install plugs.

8-151. INSPECTION — PITOT-STATIC PIPING AND FITTINGS.

a. Inspect pitot and static piping and fittings for leaks, chafing, crimping, or other visible damage.

b. Inspect system for improperly installed fittings and clamps.

c. Remove drain plugs and check for moisture.

d. Inspect static ports for damage, obstructions and cleanliness.

8-152. REMOVAL — PITOT-STATIC PIPING AND FITTINGS.

a. Disconnect pitot and static lines from indicators. Cap openings in indicators to prevent entrance of foreign material.

b. Disconnect applicable fittings and clamps.

c. Remove pitot and static lines.

8-153. REPAIR OR REPLACEMENT — PITOT-STATIC PIPING AND FITTINGS.

a. Repair any leaks to pitot system found during check procedure. Refer to TM 1-1500-204-23.

b. Replace only defective components such as broken B nuts, deteriorated hoses, bad valves, etc. Check for kinked hoses.

c. Remove drain plugs and check for moisture.

d. If moisture is found, perform cleaning procedures as outlined in paragraph 8-150.

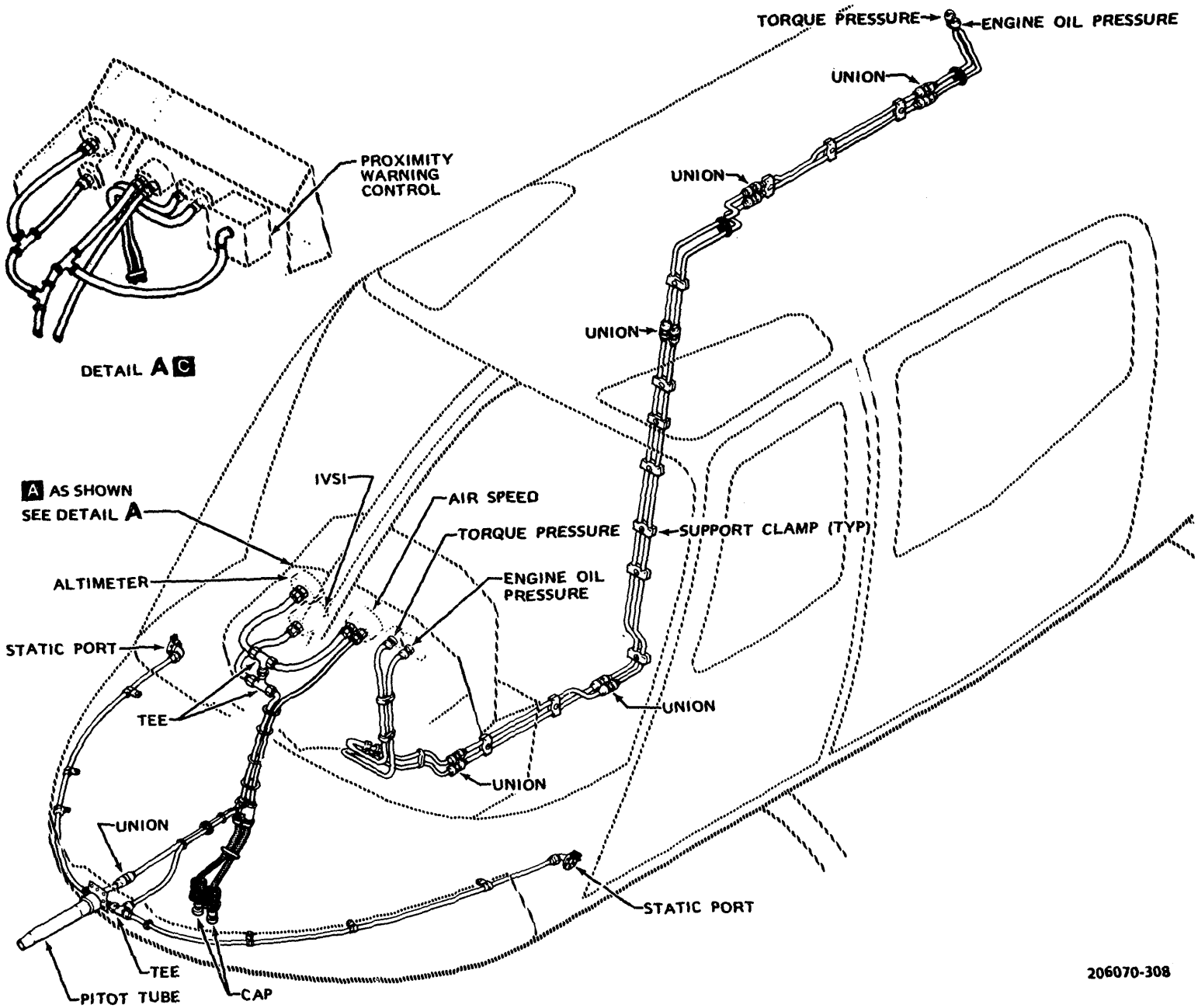

Figure 8-1. Pitot-Static and Instrument Piping Installation A (After incorporation of MWO 55-1520-228-30/22)

8-154. INSTALLATION — PITOT-STATIC PIPING AND FITTINGS.

a. Route pitot and static lines through clamps in place. Tighten clamps. Connect pitot and static lines to indicators.

b. Apply silicone lubricant (C104) to threads of fitting couplings.

c. Connect fittings. Torque coupling nuts finger tight.

d. Conduct functional check. Refer to paragraph 8-155.

8-155. FUNCTIONAL CHECK — ALTIMETER, AIRSPEED, AND VERTICAL SPEED INDICATORS — PITOT-STATIC SYSTEM. (Removing the instruments from the helicopter is not required for performing the functional check.)

CAUTION

Do not apply suction to pitot lines or pressure to static lines; except as instructed in paragraph 8-155c.

NOTE

Ensure pitot static tester has a current calibration label (DA Form 80). Use appropriate power supply in accordance with pitot static tester requirements.

a. Pitot Line Leak check

(1) Seal pitot tube drain holes air tight with pressure sensitive tape (C136).

(2) Hook up pitot static tester, airspeed outlet, to pitot system in accordance with figure 8-2. Close pitot static tester pressure down valve.

CAUTION

The valves on test set are sensitive and should be operated slowly and with care to avoid possible damage to instrument. These instruments are easily pegged and damaged by improper manipulation of the valves on the test set.

(3) Slowly apply pressure to pitot line (figure 8-2) until the airspeed indicator reads **100** knots.

(4) Tap instrument to remove friction effects. When indicator pointer drops more than **10** mph (**8.7** knots) in **one** minute, a leak is indicated. Slowly decrease pressure to return tester airspeed indicator to **zero**, repair any faults, if necessary, and repeat above steps.

b. Airspeed Indicator Functional Check.

(1) Slowly apply pressure to pitot line to obtain airspeed readings in table 8-9; indicator should be gently tapped prior to reading; check need not exceed **120** knots.

(2) If readings are not within tolerance of table 8-9, slowly relieve pressure on pitot line until airspeed indicator reads **zero**. Replace indicator with serviceable one and repeat steps b. (1) and (2).

(3) Airspeed indicators that fail check shall be turned in for overhaul.

CAUTION

Remove static line from aircraft airspeed indicator and cap before proceeding to next step.

c. Static Line Leak Check.

(1) Hook up pitot static tester, rate-of-climb and altimeter outlet to pitot and static system in accordance with figure 8-2.

CAUTION

Ensure that both helicopter pitot and static lines are connected to airspeed indicator to prevent possible damage to airspeed indicator.

NOTE

Hooking up the pitot line to the tester vacuum source will only be done during the following check to equalize the pressure in the airspeed indicator case to prevent damage to its diaphragm.

(2) Tape all unused static parts.

(3) Adjust test set and aircraft altimeter barometric scales to read **29.92**, gently tap altimeters, and check to ensure that aircraft altimeter reads within **70** feet of test set altimeter and

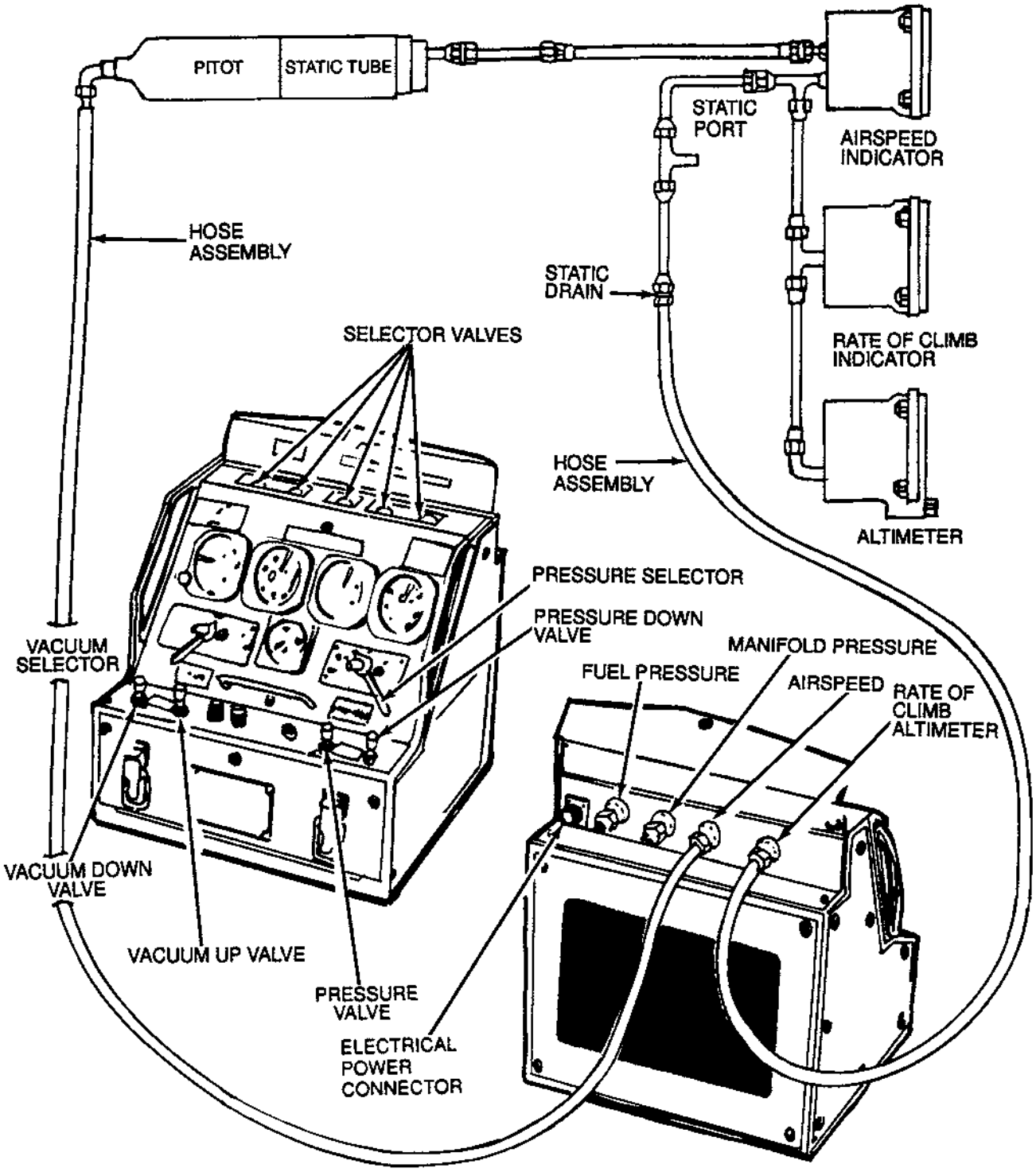

Figure 8-2. Connector for Pitot and Static Leak Check (Typical)

calibration data card located across top of tester outlet valve cover.

(4) If aircraft altimeters fail to meet this check, remove and install a serviceable instrument and repeat step c. (3).

(5) Slowly apply vacuum to pitot and static lines (figure 8-2) until the altimeter reads **1000** feet above reading obtained from step (3). Close vacuum source and gently tap altimeter at same time until vertical speed indicator stabilizes at **zero**. After stabilization, the altimeter should not drop more than **100** feet in **one** minute. Slowly decrease vacuum until vertical speed stabilizes at **zero**. Repair any faults, if necessary, and repeat this step.

d. Vertical Speed Indicator Functional Check.

(1) Slowly apply vacuum to aircraft system to obtain vertical speed readings in table 8-13 after vertical speed indicator stabilizes at desired reading, gently tap instrument, and compare readings to calibration data card across the top of tester. After completion of checks close both pitot static tester vacuum valves.

(2) Slowly decrease vacuum until desired rate of descent is obtained from table 8-13, after vertical speed indicator stabilizes at desired readings, gently tap instrument and compare readings with tester vertical speed indicator and calibration data card.

(3) Instruments that fail check and tolerance shall be replaced with a serviceable unit and steps d. (1) and (2) repeated.

(4) Vertical speed indicator that fails check shall be turned in for overhaul.

e. Altimeter Function Check.

(1) Apply 28-volt power to aircraft electrical system to provide electrical power for counter drum altimeter vibrators.

(2) Slowly apply vacuum to aircraft system at a rate not to exceed **3000** feet per minute. Continue to apply vacuum until altimeter readings reach the next higher reading on table 8-11 above altimeter altitude indicated when barometric scale is set at **29.92**.

(3) Close vacuum valve and keep altimeter at this setting for at least **one**minute, but not more than **five** minutes, then gently tap three pointer type altimeters before reading. Ensure that vibrators are operative on counter drum altimeters before readings are compared to tolerance shown in table 8-11.

(4) Compare the readings of the installed instruments against readings on the tester and calibration data card at the check points shown in table 8-11.

NOTE

Altimeters that do not pass the performance requirements of table 8-11 shall be removed from aircraft and shop tested in accordance with test procedures printed in TM 1-1500-204-23 to verify malfunctions. Install serviceable altimeter and repeat steps (1) thru (4).

(5) Remove pitot static tester and all tape from pitot-static lines and openings.

NOTE

Do not adjust altimeter through disengagement of the baroset locking screw (commonly called re-zeroing), while the altimeter is installed in helicopter.

8-156. PITOT TUBE

8-157. DESCRIPTION — PITOT TUBE. The electrically heated pitot tube is mounted on a support located in the most forward part of the cabin nose bubble just right of helicopter centerline. This tube supplies impact air to the airspeed indicator. Refer to figure 8-1.

WARNING

Degreasing Solvent is combustible and toxic to eyes, skin, and respiratory tract. Wear protective gloves and goggles/face shield. Avoid repeated or prolonged contact. Use only in well-ventilated areas (or use approved respirator as determined by local safety/industrial hygiene personnel). Keep away from open flames or other sources of ignition.

8-158. CLEANING — PITOT TUBE. Clean pitot tube head and sleeve with a clean, lint-free cloth dampened with degreasing solvent (C62).

8-159. INSPECTION — PITOT TUBE.

a. Inspect pitot tube for clogged or obstructed inlet opening, and clogged drain hole on bottom of tube.

b. Inspect pitot tube for cracks or damage.

c. If pitot tube head is removed, inspect electrical receptacle, pins, and sockets for damage.

d. Refer to paragraph 9-357 for testing pitot tube heater.

8-160. REMOVAL — PITOT TUBE.

a. Check that system electrical power is OFF.

b. Remove screws and lockwashers attaching pitot head sleeve to pitot head and pitot tube support.

c. Hold pitot head and slide sleeve forward until coupling in pitot pressure line is exposed. Disconnect pressure line and cap or cover opening in line and in pitot head to prevent entrance of foreign particles.

d. Disconnect electrical wiring, if existing, and cover wire ends and tape (C137). Remove pitot head and sleeve from helicopter.

8-161. REPAIR — PITOT TUBE.

a. Replace pitot tube head if inlet opening is clogged or obstructed, drain hole is clogged, or electrical connector is damaged.

b. Replace pitot tube head if cracked or damaged to the extent it would restrict impact air pressure.

c. Replace defective or damaged pitot electrical connector.

d. Tighten or properly install fittings.

8-162. INSTALLATION — PITOT TUBE.

a. Position pitot head sleeve on pitot head. Remove tape from wire end, and connect electrical wiring to pitot head.

b. Remove caps or covers from openings in pitot head and pressure line and connect pressure line to pitot head. Apply silicone compound (C104) to threads of coupling.

c. Align holes in pitot head sleeve with holes in pitot head and in pitot tube support and install attaching lockwashers and screws.

8-163. STATIC VENT.

8-164. DESCRIPTION — STATIC VENT. Static air pressure for instrument operation is obtained from two static vents which are located, one each, on the aft edge of the left and right lower plastic panels of the cabin nose bubble. Refer to figure 8-1.

8-165. CLEANING, INSPECTION AND REPAIR — STATIC VENT.

NOTE

The static vent is riveted to fuselage skin and not easily removable. For cleaning and inspection purposes refer to paragraph 8-150

8-166. AIRSPEED INDICATOR.

8-167. DESCRIPTION — AIRSPEED INDICATOR. The airspeed indicator is a standard pitot static instrument. The single scale indicator provides an airspeed reading in knots by measuring the difference between the impact air pressure from the pitot tube and the static air pressure from the static vents. Refer to figure 8-3 for location of indicator.

8-168. CLEANING — AIRSPEED INDICATOR. Refer to paragraph 8-3.

8-169. INSPECTION — AIRSPEED INDICATOR. Refer to paragraph 8-4.

8-170. FUNCTIONAL CHECK — AIRSPEED INDICATOR. Check the airspeed indicator using pitot-static system tester. Refer to paragraph 8-155.

8-171. TROUBLESHOOTING — AIRSPEED INDICATOR. Use table 8-8 and perform necessary checks to isolate trouble.

NOTE

Before using table 8-8, ensure all normal operational checks have been performed. If a malfunction exists which is not listed in table 8-8, notify the next higher level of maintenance.

1. Defog Pull
2. Vent Pull
3. Fuel Boost Switch (If Installed)
4. Compass, Magnetic
5. Holder, Compass Correction Card

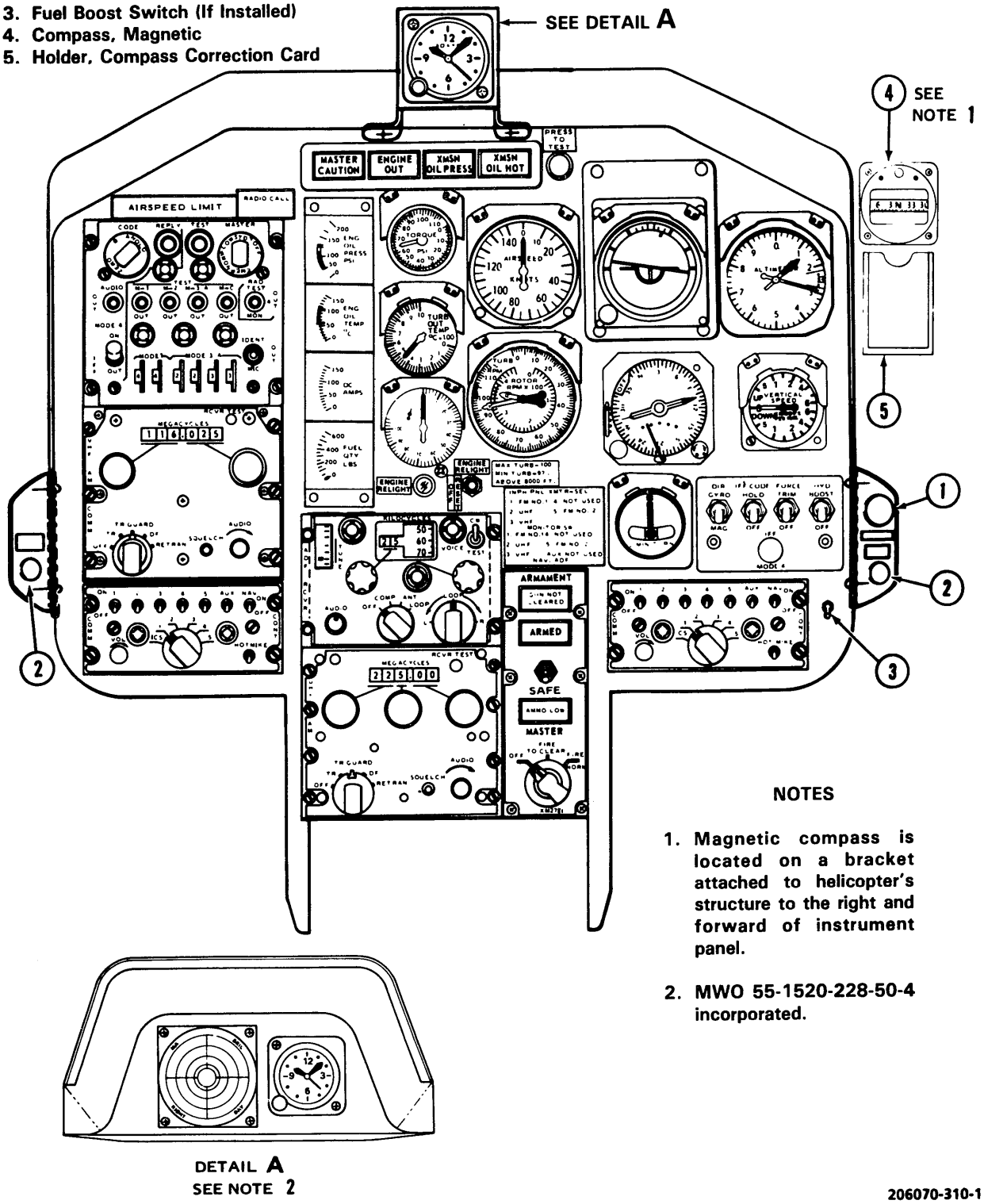

NOTES

1. Magnetic compass is located on a bracket attached to helicopter's structure to the right and forward of instrument panel.

2. MWO 55-1520-228-50-4 incorporated.

206070-310-1

Figure 8-3. Instrument Panel (Typical) A (Sheet 1 of 2)

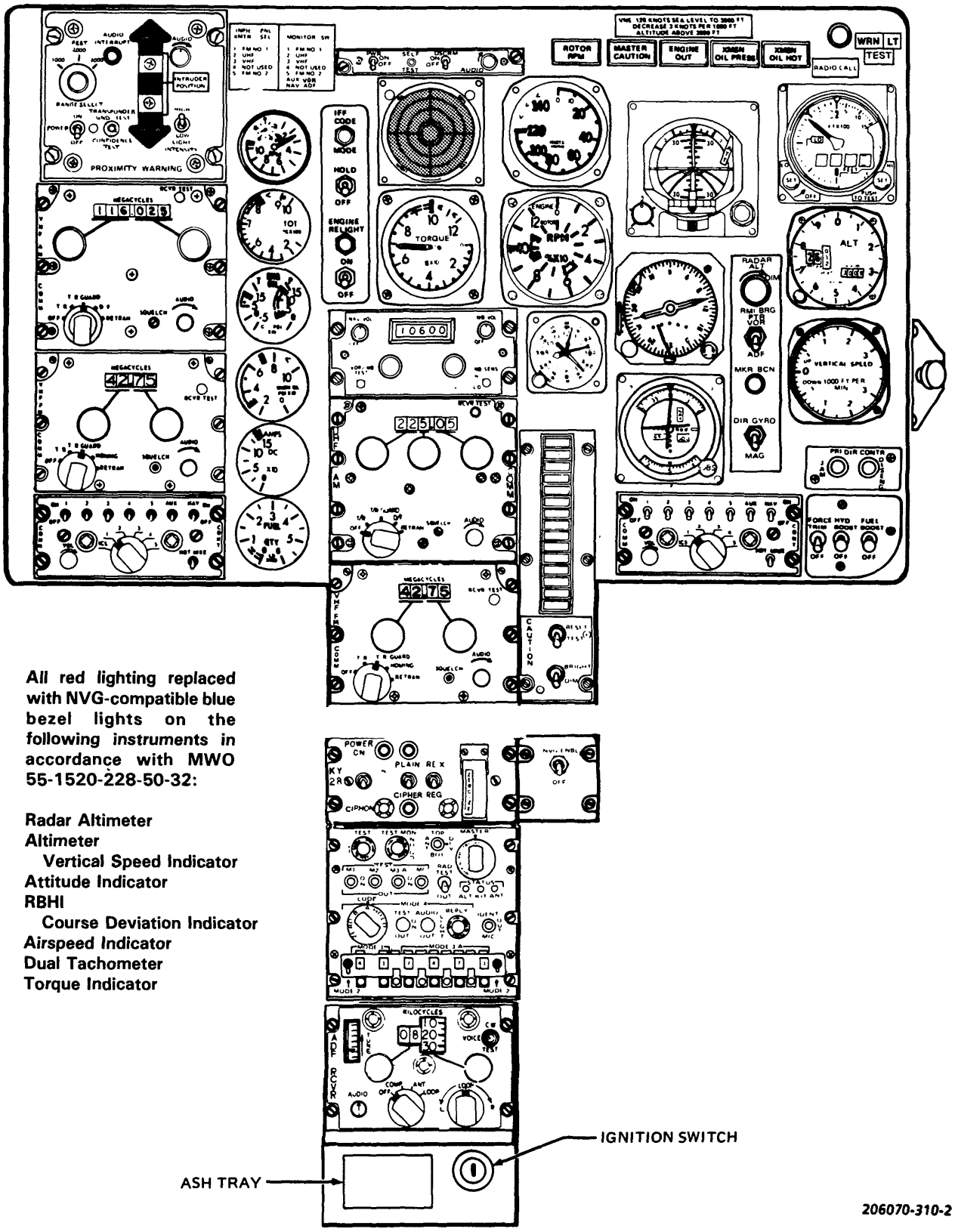

All red lighting replaced with NVG-compatible blue bezel lights on the following instruments in accordance with MWO 55-1520-228-50-32:

Radar Altimeter
Altimeter
  Vertical Speed Indicator
Attitude Indicator
RBHI
  Course Deviation Indicator
Airspeed Indicator
Dual Tachometer
Torque Indicator

Figure 8-3. Instrument Panel (Typical) (Sheet 2 of 2)

Table 8-8. Troubleshooting — Airspeed Indicator

CONDITION

TEST OR INSPECTION

CORRECTIVE ACTION

1. Pointer fails to respond

   STEP 1. Check for pressure line not connected.

   Connect line.

   STEP 2. Check for obstruction in line. Refer to paragraph 8-150.

   Disconnect all pitot-static lines and blow lines clear with clean dry air. Refer to paragraph 8-150.

2. Pointer indicates incorrectly.

   STEP 1. Check for leak in line. Refer to paragraph 8-155.

   Repair or replace line. Refer to paragraph 8-153.

   STEP 2. Determine if indicator is defective or leaking by substitution of known good indicator.

   Replace indicator if defective. Refer to paragraph 8-7.

   STEP 3. Check vent for obstruction or baffle bent.

   Drain moisture or clean obstruction from static line. Straighten baffle. Refer to paragraph 8-150.

3. Pointer vibrates.

   STEP 1. Check security of instrument on panel. Refer to paragraph 8-3.

   Tighten instrument mounting screws. Refer to paragraph 8-7.

4. Pointer oscillates.

   STEP 1. Check for leak in line. Refer to paragraph 8-155.

   Repair or replace line. Refer to paragraph 8-153.

   STEP 2. Determine if instrument is defective.

   Replace instrument. Refer to paragraph 8-7.

Table 8-9. Airspeed Indicator Tolerance

Airspeed Check Points (Knots)	MS 28045 10 To 150 (Knots)	MS 28021 20 To 250 (Knots)	MS 28048 40 To 400 (Knots)
40	3	5	4
60	3	3	3
80	3	3	3
100	3	4	3
120	3	4	3

8-172. REMOVAL — AIRSPEED INDICATOR. Refer to paragraph 8-5.

8-173. REPAIR — AIRSPEED INDICATOR. Refer to paragraph 8-6.

8-174. INSTALLATION — AIRSPEED INDICATOR. Refer to paragraph 8-7.

8-175. ALTIMETER.

8-176. DESCRIPTION — ALTIMETER. The altimeter furnishes direct readings of helicopter height in feet above sea level. the altimeter is connected through piping to static pressure ports to sense atmospheric pressure. An external adjustment knob is provided to make compensation for variations of prevailing barometric pressure. Refer to figure 8-1 and 8-3 for equipment locations.

8-177. CLEANING — ALTIMETER. Refer to paragraph 8-3.

8-178. INSPECTION — ALTIMETER. Refer to paragraph 8-4.

8-179. FUNCTIONAL CHECK — ALTIMETER. Check the altimeter using pitot-static system tester. Refer to paragraph 8-155.

8-180. TROUBLESHOOTING — ALTIMETERS. Use table 8-10 and perform necessary checks to isolate trouble.

NOTE

Before using table 8-10, ensure all normal operational checks have been performed. If a malfunction exists which is not listed in table 8-10, notify the next higher level of maintenance.

Table 8-10. Troubleshooting — Altimeter

CONDITION

TEST OR INSPECTION

CORRECTIVE ACTION

1. Pointer indicates incorrectly.

STEP 1. Check for leak in static line. Refer to paragraph 8-151

Repair or replace line. Refer to paragraph 8-153.

STEP 2. Check for plugged static vent.

Clean static vent. Refer to paragraph 8-165.

STEP 3. Check for defective instrument. Refer to paragraph 8-4 and 8-155.

Replace instrument. Refer to paragraph 8-7.

Table 8-11. Altimeter Scale Error

ALTITUDE (Feet)	TOLERANCE (Feet)
0	±70
500	±70
1,000	±70
2,000	±70
3,000	±70
5,000	±100
10,000	±130
15,000	±140

8-181. REMOVAL — ALTIMETERS. Refer to paragraph 8-5.

8-182. REPAIR — ALTIMETERS. Refer to paragraph 8-6.

8-183. INSTALLATION — ALTIMETERS. Refer to paragraph 8-7.

8-183.1. RADAR ALTIMETER WITH VOICE WARNING (AFTER COMPLIANCE WITH MWO 1-1520-228-50-52).

8-183.2. DESCRIPTION. After radar altimeter set AN/APR-209(V) with voice warning is installed, the pilot is provided with an instrument panel mounted indicator of absolute clearance above the ground. Refer to TM11-1520-228-20-1 for description, installation and maintenance of the system components.

8-184. VERTICAL SPEED INDICATOR

8-185. DESCRIPTION — VERTICAL SPEED INDICATOR (VSI). The VSI instrument is connected to the pitot-static air system and incorporates a mechanism that provides instantaneous indications. It is actuated by the rate of atmospheric pressure change and provides an anticipated indication of speed of ascent or descent in feet per minute. Refer to figure 8-1 for location.

8-186. CLEANING — VERTICAL SPEED INDICATOR. Refer to paragraph 8-3.

8-187. INSPECTION — VERTICAL SPEED INDICATOR. Refer to paragraph 8-4.

8-188. FUNCTIONAL CHECK — VERTICAL SPEED INDICATOR. Check the vertical speed indicator using pitot-static system tester. Refer to paragraph 8-155.

8-189. TROUBLESHOOTING — VERTICAL SPEED INDICATOR. Use table 8-12 and perform necessary checks to isolate trouble.

NOTE

Before using table 8-12, be sure to perform all normal operational checks. If a malfunction exists which is not listed in table 8-12, notify the next higher level of maintenance.

8-190. REMOVAL — VERTICAL SPEED INDICATOR. Refer to paragraph 8-5.

8-191. REPAIR — VERTICAL SPEED INDICATOR. Refer to paragraph 8-6.

8-192. INSTALLATION — VERTICAL SPEED INDICATOR. Refer to paragraph 8-7.

8-193. TURN AND SLIP INDICATOR A

8-194. DESCRIPTION — TURN AND SLIP INDICATOR. The turn and slip indicator is controlled by an electrically actuated gyro. This instrument has a needle (turn indicator and a ball (slip indicator). Although needle and ball are combined in one instrument and are normally read and interpreted together each has its own specific function and operates independently of the other. The ball indicates when helicopter is in directional balance, either in a turn or in straight and level flight. If helicopter is yawing or slipping, ball will be off center. The needle indicates in which direction and at what rate helicopter is turning. Refer to figure F-4 for wiring diagram.

8-195. CLEANING — TURN AND SLIP INDICATOR. Refer to paragraph 8-3.

8-196. INSPECTION — TURN AND SLIP INDICATOR. Refer to paragraph 8-4.

8-197. TROUBLESHOOTING — TURN AND SLIP INDICATOR. Use table 8-14 and perform necessary checks to isolate trouble.

NOTE

Before using table 8-14, ensure all normal operational checks have been performed. If a malfunction exists which is not listed in table 8-14, notify the next higher level of maintenance.

Table 8-12. Troubleshooting — Vertical Speed Indicator (VSI)

CONDITION

TEST OR INSPECTION

CORRECTIVE ACTION

1. Pointer fails to respond.

STEP 1. Check for obstruction in line. Refer to paragraph 8-151.

Drain moisture and/or clean obstruction from static line. Refer to paragraph 8-150.

STEP 2. Check for defective indicator. Refer to paragraphs 8-4 and 8-155.

Replace indicator. Refer to paragraph 8-7.

2. Pointer indicates incorrectly.

STEP 1. Check for leak in static line. Refer to paragraph 8-151.

Repair or replace line. Refer to paragraph 8-153.

STEP 2. Tap face of indicator lightly while adjusting and return pointer to zero by turning adjustment knob.

STEP 3. Check for plugged static vent.

Clean static vent. Refer to paragraph 8-165.

STEP 3. Check for defective instrument.

Replace instrument.

Table 8-13. Vertical Speed Indicator Tolerance

	Scale Accuracy	
Standard Altitude Check Interval (Feet)	**Check Rate Ascent or Descent (FPM)**	**Tolerance Scale Error (FPM)**
2000 To 2500	500	±100
2000 To 3000	1000	±200
2000 To 4000	2000	±300
2000 To 5000	3000	±300
15,000 To 17,000	2000	±300

Table 8-14. Troubleshooting — Turn and Slip Indicator A

CONDITION / TEST OR INSPECTION	CORRECTIVE ACTION
1. Pointer remains centered, either constantly or intermittently.	
STEP 1. Check for sticky gyro.	**Replace indicator. Refer to paragraph 8-7.**
STEP 2. Check for electrical power to indicator. Refer to paragraph 8-198.	**Ensure proper circuitry connections and replace faulty wiring. Refer to figure F-4.**
2. Ball too sensitive.	
STEP 1. Check if dampening fluid has leaked out.	**Replace indicator. Refer to paragraph 8-7.**

8-198. TESTING — TURN AND SLIP INDICATOR.

a. Determine that power is connected to helicopter.

b. Determine that TURN & BANK IND circuit breaker is depressed (closed).

c. Check that the indicator gyro is running.

8-199. REMOVAL — TURN AND SLIP INDICATOR. Refer to paragraph 8-5.

8-200. REPAIR OR REPLACEMENT — TURN AND SLIP INDICATOR. Refer to paragraph 8-6.

8-201. INSTALLATION — TURN AND SLIP INDICATOR. Refer to paragraph 8-7.

8-202. ATTITUDE INDICATOR A .

8-203. DESCRIPTION — ATTITUDE INDICATOR. The attitude indicator displays rate of turn of the helicopter relative to the earth. The indicator is self-contained and requires connection through a 1/2 ampere circuit breaker (GYRO HORIZ) 115 Vac bus. Refer to figure F-4.

8-204. CLEANING — ATTITUDE INDICATOR. Refer to paragraph 8-3.

8-205. INSPECTION — ATTITUDE INDICATOR. Refer to paragraph 8-4.

8-206. TESTING — ATTITUDE INDICATOR.

a. Determine that power is connected to helicopter.

b. Position helicopter circuit controls as follows:

(1) Position inverter switch to INV.

(2) Depress (close) the GYRO HORIZ circuit breaker.

c. Observe that within **3** minutes, the indicator OFF flag disappears.

d. Cage the gyro by pulling out, then releasing PULL TO ERECT knob. Check that the display erects properly and remains stable in both pitch and roll.

NOTE

When caging the gyro, PULL TO ERECT knob must be pulled straight out without turning. If turned, knob may lock in the out position. Gyro will not cage until knob has been released and returned to its normal position.

e. Rotate pitch trim knob (at lower center of indicator). Check that trim indicator moves up; and then down, or moves down and then up.

f. Return trim knob to **zero** trim. Check that display remains stable in both pitch and roll.

g. Open GYRO HORIZ circuit breaker. Check that the OFF flag appears and that gyro decreases in speed and stops after several minutes.

h. Return inverter switch to the OFF position.

8-207. TROUBLESHOOTING — ATTITUDE INDICATOR. Use table 8-15 and perform necessary checks to isolate trouble.

NOTE

Before using table 8-15, ensure all normal operational checks have been performed. If a malfunction exists which is not listed on table 8-15, notify the next higher level of maintenance.

Table 8-15. Troubleshooting — Attitude Indicator

CONDITION / TEST OR INSPECTION	CORRECTIVE ACTION
1. Indicator does not operate.	
STEP 1. Check for AC power failure (INST INVERTER light illuminated).	**Check wiring, plug, circuit breakers, and inverter switch. Repair or replace faulty component or wiring as necessary.**
2. Indicator does not indicate within **±1** degree.	
STEP 1. Check for defective indicator. Refer to paragraphs 8-4 and 8-206.	**Replace indicator. Refer to paragraph 8-7.**
STEP 2. Check for loose plug at indicator.	**Make proper plug installation at indicator.**
STEP 3. Check for faulty wiring.	**Check system circuit and wiring. Repair or replace faulty component or wiring as necessary.**

8-208. REMOVAL — ATTITUDE INDICATOR. Remove attitude indicator from instrument panel in accordance with paragraph 8-5.

8-209. REPAIR OR REPLACEMENT — ATTITUDE INDICATOR. Repair the indicator in accordance with paragraph 8-6.

8-210. INSTALLATION — ATTITUDE INDICATOR. Install the indicator in the instrument panel in accordance with paragraph 8-7.

8-211. ATTITUDE/ TURN AND SLIP INDICATOR C .

8-212. DESCRIPTION — ATTITUDE/TURN AND SLIP INDICATOR. The attitude/turn and slip indicator has a self-contained vertical gyro and displays flight attitude of the helicopter in relation to the horizon. The display can be adjusted for trim in level flight by means of pitch trim and roll trim knobs on the front of the indicator. The indicator rate-of-turn pointer indicates the direction and rate of turn that the helicopter is turning. It is controlled by electrical signals derived from a directional gyro (part of compass system). The ball indicates when the helicopter is in directional balance, either in a turn or in straight and level flight. If the helicopter is yawing or slipping, ball will be off center. Refer to figure F-24 for wiring diagram and figure 8-3 for indicator location. The indicator receives 28 Vdc power when the ATTD TURN and ATTD HRZN circuit breakers are depressed. the indicator receives 115 Vac reference power when the GYRO CMPS circuit breaker is depressed.

8-213. CLEANING — ATTITUDE/TURN AND SLIP INDICATOR. Refer to paragraph 8-3.

8-214. INSPECTION — ATTITUDE/TURN AND SLIP INDICATOR. Refer to paragraph 8-4.

8-215. TESTING — ATTITUDE/TURN AND SLIP INDICATOR.

a. Energize inverter, close ATTD TURN, ATTD HRZN and GYRO CMPS circuit breakers. Indicator ATT flag will disappear within **3-1/2** minutes.

b. Attitude display will erect properly (within one degree) and remain stable in both pitch and roll. Rate-of-turn pointer will be approximately centered. Ball will be centered if helicopter is level.

c. Rotate pitch trim knob in lower left corner of indicator to full clockwise position. Miniature airplane will move upward to indicate a **10** degree climb.

d. Rotate pitch trim knob to full counterclockwise position. Miniature airplane will move downward to indicate a **10** degree dive.

e. Return trim knob to **zero** trim. Display will remain stable in both pitch and roll.

f. Momentarily depress the fast erect knob in lower right corner of indicator. The fast erect mode of operation is automatically maintained, **1.000 (±0.250)**minute. The ATT flag will appear while system is in fast erect mode and disappear when automatic time cycle has elapsed, **1.000 (±0.250)** minute.

g. Open ATTD TURN, ATTD HRZN and GYRO CMPS circuit breakers. ATT flag will appear, gyros speed will decrease and stop after several minutes. Rate-of-turn pointer will be biased out of view.

8-216. TROUBLESHOOTING — ATTITUDE/TURN AND SLIP INDICATOR. Use table 8-16 and perform necessary checks to isolate trouble.

NOTE

Before using table 8-16, ensure all normal operational checks have been performed. If a malfunction exists which is not listed in table 8-16, notify the next higher level of maintenance.

Table 8-16. Troubleshooting — Attitude/Turn and Slip Indicator C

CONDITION	TEST OR INSPECTION	CORRECTIVE ACTION
1. Attitude indicator inoperative. Turn and slip function properly.		
	STEP 1. Open or defective ATTD-TURN HRZN circuit breaker.	
		Close or replace circuit breaker.
	STEP 2. Check for faulty wiring.	
		Check system circuit and wiring. Repair or replace faulty wiring as necessary.
	STEP 3. Check for defective indicator.	
		Replace indicator. Refer to paragraphs 8-217 and 8-219.
2. Ball is too sensitive.		
	STEP 1. Determine if dampening fluid has leaked out of indicator.	
		Replace indicator. Refer to paragraphs 8-217 and 8-219.

8-217. REMOVAL — ATTITUDE/TURN AND SLIP INDICATOR. Refer to paragraph 8-5.

8-218. REPAIR OR REPLACEMENT — ATTITUDE/TURN AND SLIP INDICATOR. Refer to paragraph 8-6.

8-219. INSTALLATION — ATTITUDE/TURN AND SLIP INDICATOR. Refer to paragraph 8-7.

SECTION III. NAVIGATION INSTRUMENTS

8-220. MAGNETIC COMPASS (STANDBY).

8-221. DESCRIPTION — MAGNETIC COMPASS (STANDBY). The magnetic compass is a standard, nonstabilized, magnetic type instrument mounted on a support which is attached to the forward cabin, right side. The compass is used in conjunction with a compass correction card that is located adjacent to the compass.

8-222. CLEANING — MAGNETIC COMPASS (STANDBY). Refer to paragraph 8-3.

8-223. INSPECTION — MAGNETIC COMPASS (STANDBY) Refer to paragraph 8-4.

8-224. COMPENSATION (SWINGING) — MAGNETIC COMPASS (STANDBY). Refer to TM 1-1500-204-23.

8-225. REPAIR — MAGNETIC COMPASS (STANDBY). Replace compass if found to be defective.

8-226. INSTALLATION — MAGNETIC COMPASS (STANDBY). Refer to paragraph 8-7.

8-227. TROUBLESHOOTING — MAGNETIC COMPASS (STANDBY). Refer to TM 1-1500-204-23.

8-228. GLOBAL POSITIONING SYSTEM (GPS) (AFTER COMPLIANCE WITH MWO 1-1520-228-50/53).

8-228.1. DESCRIPTION — GLOBAL POSITIONING SYSTEM (GPS). After GPS is installed, the pilot is provided a six-channel dual-frequency receiver module with a Precise Positioning Service (PPS) capability. Refer to TM 11-1520-228-20-1 for description, installation and maintenance of the system components.

SECTION IV. MISCELLANEOUS INSTRUMENTS

8-229. DESCRIPTION-MISCELLANEOUS INSTRUMENTS. The miscellaneous instruments included fuel quantity indicating system, free air temperature gage, clock, and dc ammeter.

NOTE

A transmission oil pressure indicating system is installed on OH-58C helicopters. C

8-230. FUEL QUANTITY INDICATING SYSTEM.

8-231. DESCRIPTION-FUEL QUANTITY INDICATING SYSTEM. This fuel gaging system is designed specifically to measure mass or weight of fuel in the helicopter fuel cell. The operation of the system is based on the principle that the capacitance of a capacitor in an electrical circuit is determined by the dielectric constant of the insulating medium between capacitor plates. When the fuel cell is empty, air is the insulating medium and when there is fuel in the cell, fuel is the insulating medium. The tank unit assembly (Z5) acts as a variable capacitor in the circuit. The capacitance of the tank unit will vary in direct proportion to the mass of fuel in the tank. The tank unit is a flange mounted unit with system electronics housed in the flanged head. The indicator (part of instrument cluster) is milliamp meter which receives a rectified dc signal in proportion to the level sensed by the tank unit. The signal is generated by a small transistorized oscillator which applies the unbalance signal in the bridge and applies a signal to a bridge circuit. A sensitive amplifier amplifies it to a stage of rectification to allow adaptation to a calibrated milliamp meter. Refer to Figure F-6 A or Figure F-26 C .

8-232. TEST AND ADJUSTMENT - FUEL QUANTITY INDICATING SYSTEM.

Premaintenance Requirements for Testing Fuel Quantity System

Condition	Requirements
Model	OH-58A/OH-58C
Part No. or Serial No.	All
Special Tools	None
Test Equipment	None
Support Equipment	None
Minimum Personnel Required	Three
Consumable Material	(C95) (C119)
Special Environmental Conditions	None

a. Adjustment (on helicopter)

WARNING

Refer to TM 1-1500-204-23-3 for safety precautions when servicing fuel system.

CAUTION

Calibration must be accomplished with an external power supply. If an expedited calibration must be accomplished with battery power, calibration must be repeated within 30 days using external power. Aircraft remains on a Red - (dash) status until this procedure is completed using external power.

NOTE

The most accurate method of adjustment, after system is installed on the helicopter, is with a known quantity of fuel in the cell. The minimum readjustment requirement after replacement of fuel quantity indicator or lower transmitter is resetting the empty adjustment. A complete adjustment must be accomplished after replacement of upper tank transmitter (signal conditioner).

(1) Completely drain fuel tank. Refer to para 1-7.

(1a) Level helicopter, refer to para 1-45.

(2) Apply external power, refer to paragraph 1-46. Verify system voltage is 28 ± 0.5 volts.

(3) Ensure that OH-58A instrument cluster or OH-58C fuel quantity circuit breaker is in (ON) position.

(4) Observe that the "20 MIN FUEL" caution light is on. DO NOT fly helicopter if low fuel "20 MIN FUEL" caution system is not working.

NOTE

In the following steps, fuel must be added in accurately measured quantities from a calibrated container. DO NOT rely on the fuel truck meter.

(5) If tank is completely dry (new tank, sump removed, or similar condition), add a measured quantity of 0.2 gallons of fuel to tank. NOTE: This fuel is the undrainable fuel allowance. If tank was drained using a sump pump, DO NOT add this fuel.

(6) Add a measured quantity of 1.2 gallons of fuel to tank. NOTE: This fuel with undrainable fuel is the unusable fuel allowance (total of 1.4 gallons unusable).

(7) Turn "E" adjustment screw on upper fuel transmitter clockwise until cockpit gage reads above zero, turn adjustment screw counterclockwise until pointer goes downscale to zero. Lightly tap cockpit gage during adjustment.

(8) Begin fueling helicopter and observe that "20 MIN FUEL" caution light goes out when a measured total (including amount added in paragraph (6)) of 12.5 ± 2.5 gallons have been loaded. NOTE: Remaining fuel may be added using standard gravity fueling method. Refer to paragraph 1-5 c.

(9) Continue fueling helicopter to spillover. Observe total quantity of fuel added is 71.5 gallons. If measured quantity is not within ± 2.5 gallons, check for errors in measurement system or defects such as swelling (activation) of fuel cell. If necessary repeat entire procedures using calibrated containers to measure fuel added.

(10) Turn "F" adjustment screw on upper fuel transmitter until cockpit gage reads 450 pounds, lightly tap cockpit gage during adjustment.

(11) Disconnect external power.

(12) The following is an acceptable method of setting the high level on the fuel gage when 450 pounds is not acceptable; such as when JP-5/JP-8 is used.

(a) Complete entire process as stated previously. If system cannot be adjusted to read 450 pounds there is a problem, most likely a defective upper transmitter.

(b) Determine actual fuel density with a hydrometer.

(c) Calculate the weight of a full tank by multiplying density times 70.3 (70.3 gallons is usablefuel).

NOTE

Fuel gage marks are in 50 pound intervals. It is not possible to establish precise readings at smaller increments, however it is acceptable to estimate to the nearest 12.5.

(d) Set fuel gage to calculated value using "F" adjustment screw. Lightly tap cockpit gage during adjustment.

b. Deleted.

8-233. FUEL QUANTITY INDICATOR.

8-234. DISCREPTION - FUEL QUANTITY INDICATOR. The fuel quantity indicator receives inputs from fuel transmitters and indicates fuel quantity in total pounds.

8-235. CLEANING - FUEL QUANTITY INDICATOR. Refer to paragraph 8-3.

8-236. INSPECTION - FUEL QUANTITY INDICATOR. Refer to paragraph 8-4

8-237. TROUBLESHOOTING - FUEL QUANTITY INDICATOR. Use table 8-17 and perform necessary checks to isolate trouble.

NOTE

Before using table 8-17 ensure all normal operational checks have been performed. If a malfunction exists which is not listed in table 8-17, notify next higher level of maintenance.

AVERAGE JP-4 VARIATION OF SPECIFIC GRAVITY AND WEIGHT (MIL-T-5624) WITH TEMPERATURE.

NOTE - WT. OF FUEL IN LBS./GAL. = SPECIFIC GRAVITY X 8.347.

EXAMPLE -

FUEL @ 78 °F (28.4 °C) WEIGHS 6.39 LBS./GAL. AS SHOWN IN GRAPH OR 0.765 X 8.374 = 6.385 LBS./GAL. USING ABOVE FORMULA.

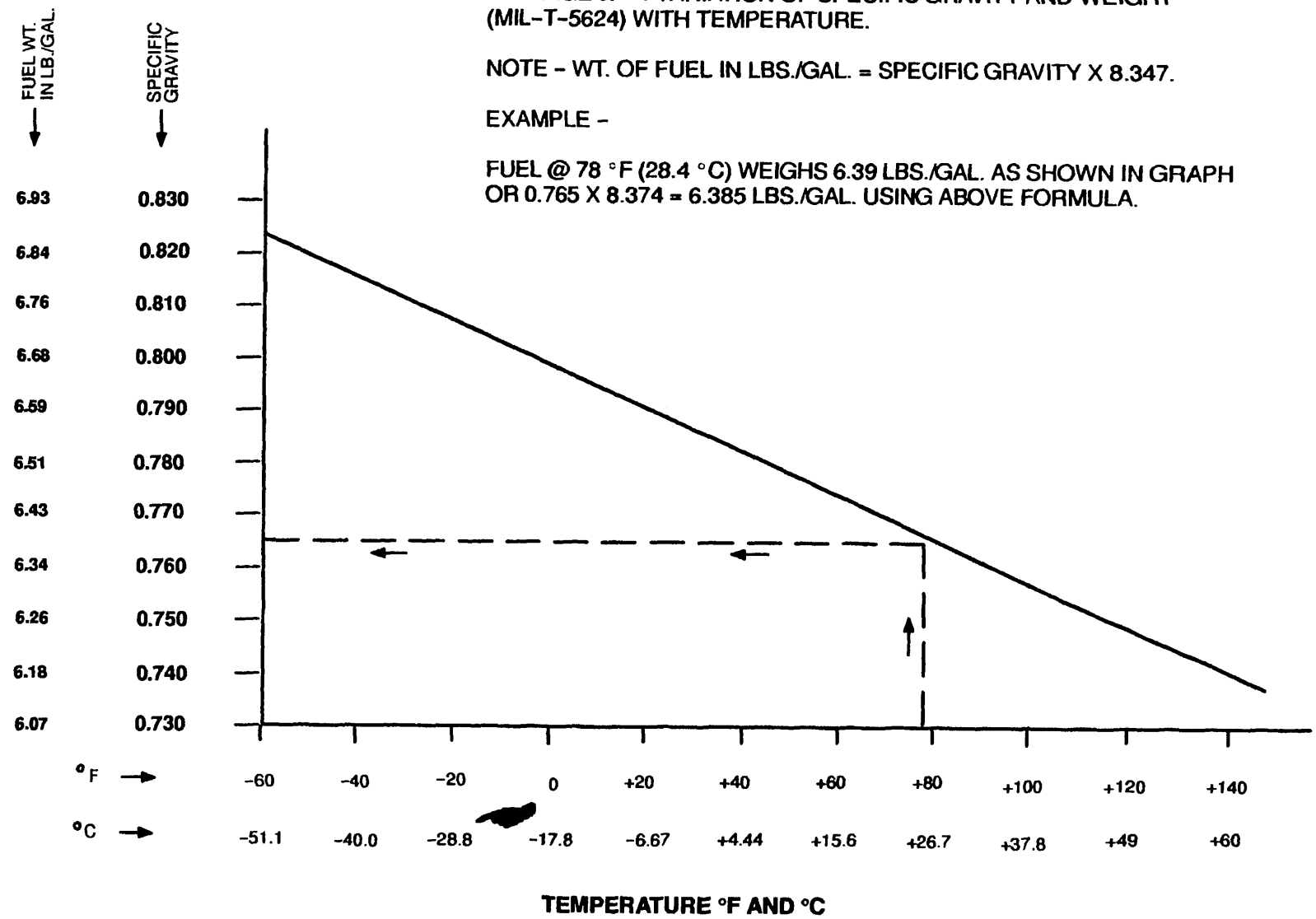

Figure 8-4. Fuel Density/Dielectric Charts

Table 8-17. Troubleshooting - Fuel Quantity Indicator

CONDITION

TEST OR INSPECT

CORRECTIVE ACTION

1. Indicator reads low.

STEP 1. System out of adjustment. Refer to paragraph 8-232.

Perform adjustment procedures. Refer to paragraph 8-232.

Step 2. Tank unit has low capacitance.

Change tank unit. Refer to paragraph 8-232.

Step 3. Indicator movement defective. Refer to paragraphs 8-4 and 8-232.

Replace indicator. Refer to paragraph 8-7.

STEP 4. Signal conditioner defective. Refer to paragraph 8-232.

Replace tank unit. Refer to paragraph 8-241 and Chapter 10 as applicable.

2. Indicator reads high.

STEP 1. System out of adjustment.

Perform adjustment procedures. Refer to paragraph 8-232.

STEP 2. Tank unit has high capacitance.

Change tank unit. Refer to paragraph 8-241 and Chapter 10 as applicable.

STEP 3. Indicator movement defective.

Replace indicator. Refer to paragraph 8-7.

STEP 4. Signal conditioner defective. Refer to paragraph 8-232.

Replace tank unit. Refer to paragraph 8-241 and Chapter 10 as applicable.

Step 5. Tank unit shorted.

Replace tank unit. Refer to paragraph 8-241 and Chapter 10 as applicable.

Table 8-17. Troubleshooting - Fuel Quantity Indicator — Continued

CONDITION	TEST OR INSPECT	CORRECTIVE ACTION
3. Indicator remains at one point on scale.		
	STEP 1. No power.	
		Check input and output of power supply.
	STEP 2. Defective indicator. Refer to paragraphs 8-4 and 8-232.	
		Replace indicator. Refer to paragraph 8-7.
	STEP 3. Coaxial lead grounded.	
		Check wiring and repair of replace as necessary.
4. Indicator remains at zero or below.		
	Open wiring.	
		Check wiring.

8-238. REMOVAL - FUEL QUANTITY INDICATOR. Refer to paragraph 8-5.

8-239. REPAIR - FUEL QUANTITY INDICATOR. Refer to paragraph 8-6.

8-240. INSTALLATION - FUEL QUANTITY INDICATOR. Refer to paragraph 8-7.

8-241. FUEL QUANTITY TRANSMITTER.

8-242. DESCRIPTION - FUEL QUANTITY TRANSMITTER. Two fuel transmitters, upper (60, Figure 10-1) and lower (20) are installed in fuel cell. These measure fuel quantity/and are electrically interconnected by jumper wires inside the fuel cell.

8-243. TESTING - FUEL QUANTITY TRANSMITTERS. The transmitters are tested in the overall system. Refer to paragraph 8-232.

8-244. TROUBLESHOOTING - FUEL QUANTITY TRANSMITTERS. Refer to paragraph 8-17.

WARNING

Fuel tank must be defueled. Refer to paragraph 1-7.

8-245. REMOVAL - FUEL QUANTITY TRANSMITTERS.

a. Remove upper transmitter as follows:

(1) Disconnect electrical connector.

(2) Remove five screws (66, Figure 10-1) and washers (65).

(3) Remove retainer (64) and seal (63).

(4) Lift transmitter (60), remove clamp, bolt, and washer (68) and disconnect electrical wiring interconnecting upper and lower transmitters.

(5) Remove transmitter (60) and gasket (62).

b. Remove lower transmitter as follows:

(1) Remove six bolts (22) and washers (21).

(2) Lower transmitter (20), and disconnect electrical wiring interconnecting upper and lower transmitters.

(3) Remove lower transmitter (20) and gasket (19).

8-246. REPAIR OR REPLACEMENT - FUEL QUANTITY TRANSMITTERS. Replace transmitters not meeting testing/adjustment requirements of paragraph 8-232.

8-247. INSTALLATION - FUEL QUANTITY TRANSMITTERS.

a. Install upper transmitter as follows:

(1) Place gasket (62, Figure 10-1) on transmitter (60), install clamp (68) and connect electrical wiring interconnecting upper and lower transmitters.

(2) Position transmitter (60) through seat back shelf into fuel cell with connector facing aft.

(3) Place seal (63) and retainer (64) on transmitter and install five screws (66) and washers (65). Torque screws **30 to 40 inch pounds**.

(4) Connect electrical connectors.

b. Install lower transmitter as follows:

(1) Place gasket (19) on transmitter (20) and connect electrical wiring interconnecting upper and lower transmitters.

(2) Place transmitter (20 through sump plate and install with six bolts (22) and washers (21).

8-248. PRESSURE SWITCH.

8-249. DESCRIPTION - PRESSURE SWITCH. Pressure switch (67, Figure 10-1) is installed in fuel line fitting (8) at top of tank. This switch lights the FUEL BOOST light in the cockpit when the fuel boost pump malfunctions or any loss of pressure is evident.

8-250. INSPECTION - PRESSURE SWITCH.

a. Inspect electrical terminal for damage and leakage.

b. Inspect switch for evidence of leakage and thread condition.

8-251. REMOVAL—PRESSURE SWITCH.

a. Remove access plate (12, figure 2-1) on outside skin above filler cap (11). Working through access opening, disconnect electrical wire from pressure switch (67, figure 10-1).

b. Cut lockwire and remove switch (67).

8-252. REPAIR OR REPLACEMENT — PRESSURE SWITCH. Replace switch not meeting inspection requirements.

8-253. INSTALLATION — PRESSURE SWITCH.

a. Install new packing on switch (67) and screw into adapter.

b. Operational check fuel boost pump and pressure switch. Refer to paragraph 9-149.b.

c. Connect electrical lead.

d. Lockwire (C95) switch and apply sealant (C129) to access plate (12, figure 2-1) and install access plate.

8-254. FREE AIR TEMPERATURE INDICATOR (THERMOMETER).

8-255. DESCRIPTION — FREE AIR TEMPERATURE INDICATOR (THERMOMETER). The thermometer is mounted in the upper center of the cabin bubble. The thermometer provides the means for measuring the outside free air temperature.

8-256. CLEANING — FREE AIR TEMPERATURE INDICATOR (THERMOMETER). Refer to paragraph 8-3.

8-257. INSPECTION — FREE AIR TEMPERATURE INDICATOR (THERMOMETER). Refer to paragraph 8-4.

8-258. TESTING—FREE AIR TEMPERATURE INDICATOR (THERMOMETER). To test the thermometer, refer to TM 1-1500-204-23.

8-259. REMOVAL—FREE AIR TEMPERATURE INDICATOR (THERMOMETER).

a. Unscrew and remove sunshield, dished washer, and one case washer from outer end of thermometer.

b. Remove thermometer and other case washer from inside of windshield.

8-260. REPAIR OR REPLACEMENT—FREE AIR TEMPERATURE INDICATOR (THERMOMETER). Replace the thermometer if it does not meet performance requirements.

8-261. INSTALLATION — FREE AIR TEMPERATURE INDICATOR (THERMOMETER).

a. Place a rubber case washer over probe of thermometer with flat side of washer next to case. Insert probe through mounting hole from inside windshield.

b. Place another rubber case washer, flat side out, on thermometer probe outside windshield. Seat washer shoulders in mounting hole. Install dished washer, with outside edge curving toward windshield. Position thermometer scale correctly before tightening.

c. Place sunshield over thermometer probe and tighten securely.

8-262. CLOCK.

8-263. DESCRIPTION—CLOCK. The clock, in instrument panel, has a sweep-second pointer and a minute totalizer hand to indicate elapsed time. The control knob on case stops pointers when pressed and returns pointers when pressed again.

8-264. CLEANING — CLOCK. Refer to paragraph 8-3.

8-265. INSPECTION — CLOCK. Refer to paragraph 8-4.

8-266. REMOVAL — CLOCK. Refer to paragraph 8-5.

8-267. INSTALLATION — CLOCK. Refer to paragraph 8-7.

8-268. DC AMMETER.

8-269. DESCRIPTION — DC AMMETER. The DC ammeter mounted in the instrument cluster, measures and indicates the output of the generator in amperes.

8-270. CLEANING — DC AMMETER. Refer to paragraph 8-3.

8-271. INSPECTION — DC AMMETER. Refer to paragraph 8-4.

8-272. TROUBLESHOOTING — DC AMMETER. Use table 8-18 and perform necessary checks to isolate trouble.

NOTE

Before using table 8-18, ensure all normal operational checks have been performed. If a malfunction exists which is not listed in table 8-18, notify the next higher level of maintenance.

Table 8-18. Troubleshooting — DC Ammeter

CONDITION TEST OR INSPECTION CORRECTIVE ACTION
1. No reading or erratic reading.
STEP 1. Defective generator. Refer to paragraph 9-22.
Replace generator. Refer to paragraph 9-42.
STEP 2. Open or short circuit in ammeter.
Replace ammeter. Refer to paragraph 8-7.
STEP 3. Dirty or worn mechanism in ammeter.
Replace ammeter. Refer to paragraph 8-7.
STEP 4. Voltage regulator faulty. Refer to paragraph 9-52
Replace voltage regulator. Refer to paragraph 9-57.
STEP 5. Open or defective circuit breakers (located in aft electrical compartment).
Check and replace circuit breakers as required.

8-273. REMOVAL — DC AMMETER. Refer to paragraph 8-5.

8-274. REPAIR OR REPLACEMENT — DC AMMETER. Refer to paragraph 8-6.

8-275. INSTALLATION — DC AMMETER. Refer to paragraph 8-7.

8-276. FUEL FILTER PRESSURE SWITCH.

Refer to paragraph 9-164.

8-277. TRANSMISSION OIL PRESSURE SWITCH.

Refer to paragraphs 9-169 and 6-277.

8-278. TRANSMISSION OIL PRESSURE INDICATING SYSTEM C .

8-279. DESCRIPTION — TRANSMISSION OIL PRESSURE INDICATING SYSTEM. The transmission oil pressure indicating system consists of the transmission oil pressure indicator, the transmission oil pressure transmitter, and interconnecting wiring. Refer to figure F-33.

8-280. TESTING — TRANSMISSION OIL PRESSURE INDICATING SYSTEM.

a. Disconnect fluid pressure line from transmission oil pressure port.

b. Disconnect freewheeling oil pressure line from cross fitting at oil pressure transmitter. Cap or plug openings.

c. Connect a pressure gage (**0 - 100** psi) MPI or equivalent (T6) to the input line on the transmission oil pressure transmitter.

d. Close XMSN OIL PRESS circuit breaker.

e. Apply pressure gradually until applied pressure is **70** psi.

f. Transmission oil pressure indicator shall indicate **70** (red line) (**±5**) psi.

8-281. TROUBLESHOOTING — TRANSMISSION OIL PRESSURE INDICATING SYSTEM. Troubleshoot the system in accordance with table 8-19.

NOTE

Before using table 8-19, ensure all normal operational checks have been performed. If a malfunction exists which is not listed in table 8-19, notify the next higher level of maintenance.

Table 8-19. Troubleshooting — Transmission Oil Pressure Indicating System C

CONDITION

TEST OR INSPECTION

CORRECTIVE ACTION

1. Pressure indicator is reading low.

   STEP 1. Check for kinked or obstructed pressure line.

   Replace or clean obstructed line. Refer to paragraph 8-4.

2. Pressure indicator is inaccurate or sticking.

   STEP 1. Determine if indicator is defective.

   Replace indicator if defective. Refer to paragraphs 8-288 and 8-290.

3. Pressure indicator has sluggish action.

   STEP 1. Check for sludge in pressure line.

   Bleed pressure line. Refer to paragraph 8-4.

Table 8-19. Troubleshooting — Transmission Oil Pressure Indicating System C — Continued

CONDITION TEST OR INSPECTION CORRECTIVE ACTION
4. Pressure indicator is inoperative.
STEP 1. Perform continuity check of circuits.
Repair or replace electrical wires.
STEP 2. Determine if indicator is defective.
Replace indicator if defective. Refer to paragraphs 8-288 and 8-290.
STEP 3. Determine if transmitter is defective.
Replace transmitter if defective. Refer to paragraphs 8-297 and 8-299.
5. Pressure indicator shows fluctuating pressure.
STEP 1. Check for loose electrical connections and determine if indicator is clamped too tight.
Tighten electrical connections or readjust clamp.
STEP 2. Determine if incorrect restictor is installed in system.
Install correct restrictor.

8-282. TRANSMISSION OIL PRESSURE INDICATOR C.

8-283. DESCRIPTION — TRANSMISSION OIL PRESSURE INDICATOR. The transmission oil pressure indicator, located on the instrument panel, indicates transmission oil pressure in psi. The indicator receives electrical signals from the transmitter equal to the oil pressure.

8-284. CLEANING — TRANSMISSION OIL PRESSURE INDICATOR. Refer to paragraph 8-3.

8-285. INSPECTION — TRANSMISSION OIL PRESSURE INDICATOR. Refer to paragraph 8-4.

8-286. TESTING — TRANSMISSION OIL PRESSURE INDICATOR. Refer to paragraph 8-280.

8-287. TROUBLESHOOTING — TRANSMISSION OIL PRESSURE INDICATOR. Refer to paragraph 8-281.

8-288. REMOVAL — TRANSMISSION OIL PRESSURE INDICATOR. Refer to paragraph 8-5.

8-289. REPAIR OR REPLACEMENT — TRANSMISSION OIL PRESSURE INDICATOR. Refer to paragraph 8-6.

8-290. INSTALLATION — TRANSMISSION OIL PRESSURE INDICATOR. Refer to paragraph 8-7.

8-291. TRANSMISSION OIL PRESSURE TRANSMITTER C.

8-292. DESCRIPTION — TRANSMISSION OIL PRESSURE TRANSMITTER. The transmission oil pressure transmitter, located on the cabin roof deck, is

attached to the cross containing the low pressure oil switch.

8-293. CLEANING — TRANSMISSION OIL PRESSURE TRANSMITTER.

a. Remove moisture and loose dirt with a clean, soft cloth.

WARNING

Isopropyl alcohol is flammable and toxic to eyes, skin, and respiratory tract. Wear protective gloves and goggles/face shield. Avoid repeated or prolonged contact. Use only in well-ventilated areas (or use approved respirator as determined by local safety/industrial hygiene personnel). Keep away from open flames, sparks or other sources of ignition.

b. Remove oil, grease, fungus, and ground-in dirt with a clean, lint-free cloth dampened with isopropyl alcohol (C150).

c. Remove dirt from electrical connector with a bristle brush (C31).

8-294. INSPECTION — TRANSMISSION OIL PRESSURE TRANSMITTER.

a. Inspect transmitter for cracks, secure and proper mounting, and proper operation.

b. Inspect oil line and fitting connection for leaks and proper installation.

c. Inspect electrical connector for damaged or bent pins and cracked inserts.

8-295. TESTING — TRANSMISSION OIL PRESSURE TRANSMITTER. Refer to paragraph 8-280.

8-296. TROUBLESHOOTING — TRANSMISSION OIL PRESSURE TRANSMITTER. Refer to paragraph 8-281.

8-297. REMOVAL — TRANSMISSION OIL PRESSURE TRANSMITTER.

a. Disconnect electrical connector and place protective covers over connectors.

b. Disconnect transmission oil pressure line and place protective cover over oil line.

c. Remove lockwire and mounting screws securing oil pressure transmitter in mounting bracket.

d. Lift transmitter from mounting bracket.

8-298. REPAIR OR REPLACEMENT — TRANSMISSION OIL PRESSURE TRANSMITTER.

a. Repair damaged electrical connector.

b. Tighten loose oil line or fitting connection.

c. Replace defective or damaged oil line or fitting.

d. Replace transmitter if cracked or damaged.

e. Reinstall improperly mounted pressure transmitter.

8-299. INSTALLATION — TRANSMISSION OIL PRESSURE TRANSMITTER.

a. Remove protective cover from oil pressure line.

b. Place new preformed packing on transmission oil pressure line. Torque transmitter **40 TO 65 INCH-POUNDS**.

c. Secure transmitter to cabin roof with bracket mounting screw and lockwire.

d. Remove protective cover from electrical plug and connect to transmitter.

CHAPTER 9
ELECTRICAL SYSTEM

9-1. ELECTRICAL SYSTEM.

9-2. GENERAL.

a. Power loading charts and detailed system wiring diagrams are contained in Appendix F. Maintenance activities shall request assistance for electrical system repairs in accordance with the maintenance allocation chart, Appendix B.

b. Refer to figure 9-1 for electrical equipment locations, figures F-4 through F-39 for systems diagrams, table F-1 for equipment listing and table F-2 for connector replacement chart.

NOTE

Illustrations pertaining to circuit breakers, control panel arrangement and face identification are contained in TM 55-1520-228-10.

When performing operational checks, external power set to 28Vdc (±0.5) volt will be utilized whenever possible. The battery is an emergency power source only. Perform operational checks to make certain that circuits are free of possible potential malfunction when equipment is replaced or airframe wiring is repaired or replaced. Words, cycles or hertz, are used to designate frequency. Either word has the same meaning. The abbreviation cps carries the same meaning as Hz.

Electrical connectors are to be lockwired in accordance with TM 55-1500-323-24.

SECTION I DIRECT CURRENT POWER DISTRIBUTION SYSTEM

9-3. DIRECT CURRENT POWER DISTRIBUTION SYSTEM.

9-4. GENERAL — DIRECT CURRENT POWER DISTRIBUTION SYSTEM. The OH-58 series helicopter is equipped with a 28-volt direct current dual-bus (essential and nonessential) system supplied by a starter-generator and battery. Major components of the dc power system include battery, starter-generator, voltage regulator, relays, switches, and circuit breakers. All circuits in the electrical system are single wire with common ground return. The negative terminals of the starter-generator and the battery are grounded to the helicopter structure. In the event of generator failure, the battery will furnish power to the essential bus. Power to the nonessential bus will be automatically disconnected. The nonessential bus relay may be manually reactivated.

NOTE

For maintenance of the direct current distribution system refer to applicable instructions for each component.

9-5. EXTERNAL POWER SYSTEM.

9-6. DESCRIPTION — EXTERNAL POWER SYSTEM. During ground operations, external power may be connected to the systems through an external power receptacle (J16) located on helicopter fuselage, lower right side of avionics compartment. No special action or switching is necessary to connect external power. If the external power connections are of correct polarity, the external power relay (k1), mounted on the forward bulkhead of the avionics compartment closes automatically and connects the ground unit to the main power cables serving the direct current bus in the avionics compartment. Refer to figures 9-1 and F-8.

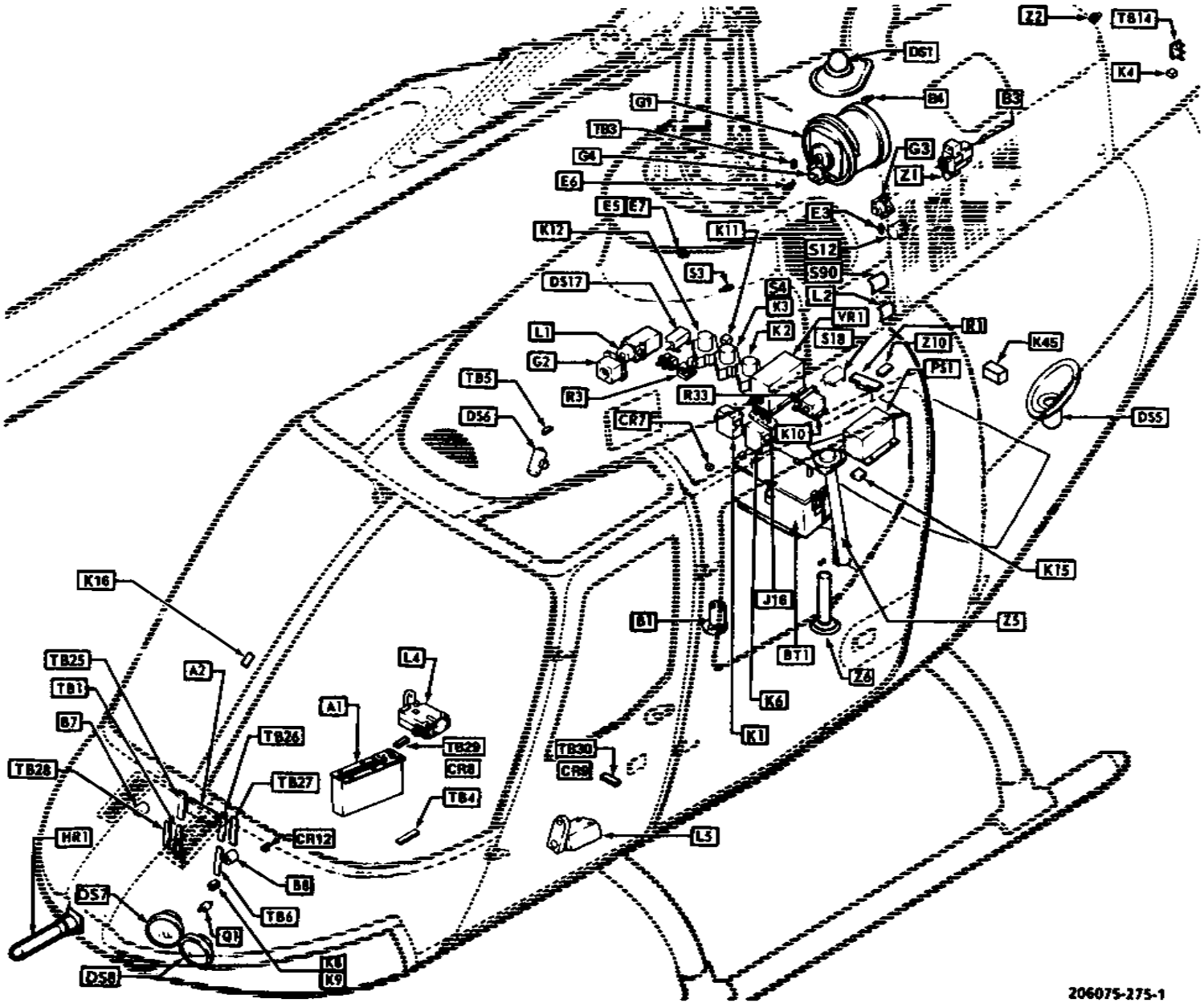

Figure 9-1. Equipment Location A

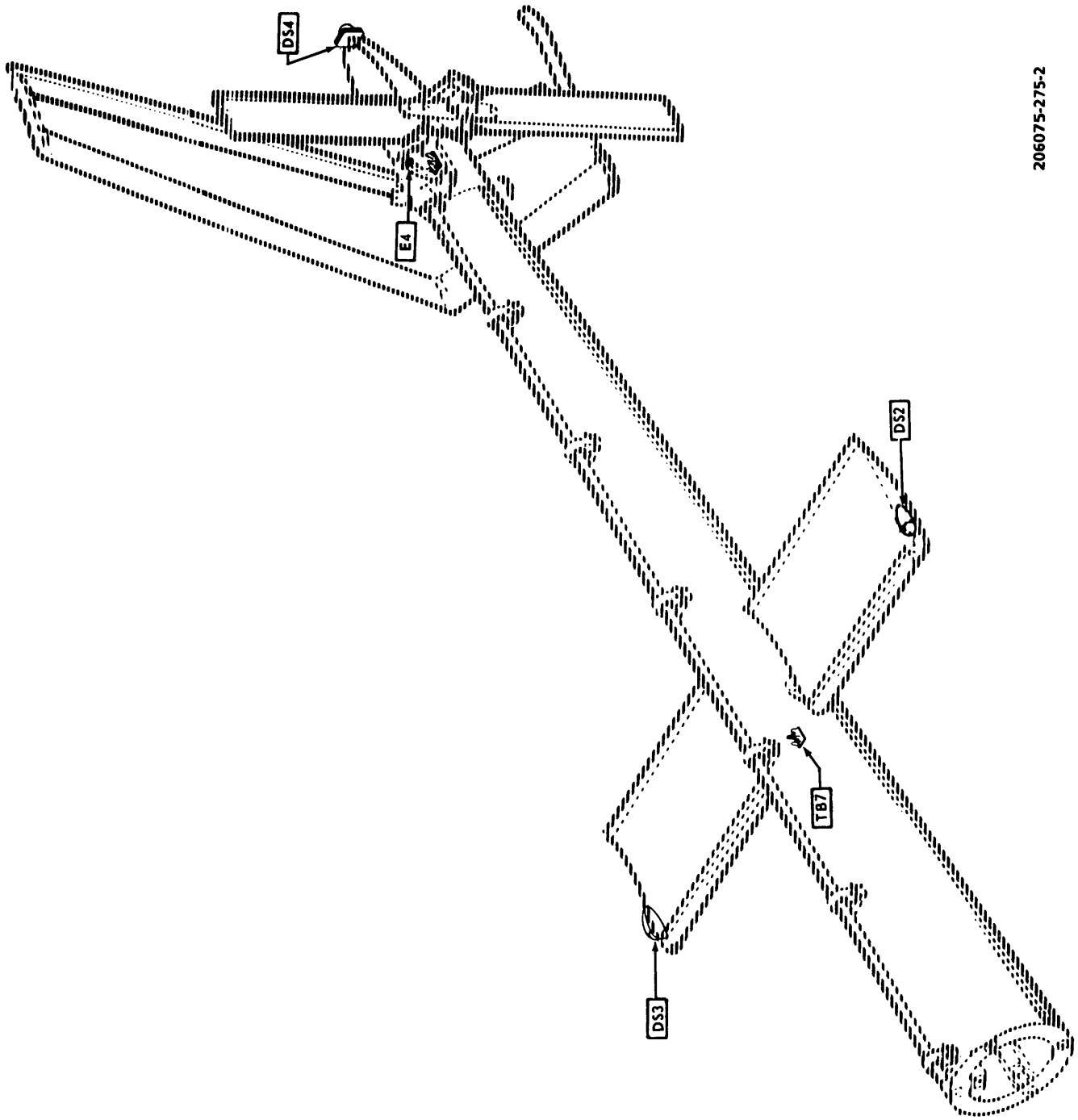

Figure 9-1. Equipment Location (Sheet 2 of 10) A

A1	Caution Panel
A2	Impedance Pad
B1	Fuel Pump
B3	Governor Control Actuator
B4	Engine De-ice Control
B7	Defog Blower (Right)
B8	Defog Blower (Left)
BT1	Battery
CB7	5 Ampere Circuit Breaker (2 Required)
CR7	Diode, External Power Relay
CR8	Diode, Force Trim — Fore and Aft
CR9	Diode, Trim Lateral Force
CR12	Diode
DS1	Anticollision Light, Upper
DS2	Position Light, Left
DS3	Position Light, Right
DS4	Position Light, Tail
DS5	Anticollision Light, Lower
DS6	Cockpit Light
DS7	Landing Light
DS8	Landing Light
DS17	Audio Warning, Engine Out
E3	Chip Detector, Engine, Upper
E4	Chip Detector, Tail Rotor
E5	Chip Detector, Transmission
E6	Chip Detector, Engine, Lower
E7	Chip Detector, Transmission
G1	Starter-Generator
G2	Rotor Tach Generator
G3	Power Turbine Tach Generator
G4	Gas Producer Tach Generator
HR1	Pitot Tube Heater
J16	Receptacle, External Power
K1	Relay, External Power
K2	Relay, Nonessential Bus
K3	Relay, Starter
K4	Relay, Engine Oil Bypass
K6	Relay, Battery
K8	Relay, Landing Light — Forward
K9	Relay, Landing Light — Aft
K10	Relay, Inverter Fail
K11	Relay, Generator Fail
K12	Relay, Line Control
K15	Relay, Heater
K16	Relay, Fuel Boost
K45	Relay Engine Relight
L1	Hydraulic Bypass Solenoid
L2	Solenoid, Heater
L4	Force Trim — Fore and Aft
L5	Force Trim — Lateral
P38	RPM Sensor
PS1	Inverter
Q1	Transistor, Dimming Element
R1	Resistor, Turbine Outlet Temperature
R3	Resistor, Shunt
R33	Resistor, Position Lights
S3	Switch, Transmission Oil Temperature
S4	Switch, Oil Pressure
S12	Switch, Fuel Pressure
S18	Sensor, RPM
S90	Switch, Heater Overheat
TB1	Terminal Board, Instrument Panel
TB3	Terminal Board, Turbine Outlet
TB4	Terminal Board, Console
TB5	Terminal Board, Utility Light
TB6	Terminal Board, Lighting
TB7	Terminal Board, Position Lights
TB14	Terminal Board, Oil Level
TB25	Terminal Board, Instrument Lighting
TB26	Terminal Board, Ground
TB27	Terminal Board, Landing Lights
TB28	Terminal Board, Master Caution Panel
TB29	Terminal Board, Diode Instrument
TB30	Terminal Board, Diode Instrument
VR1	Voltage Regulator
Z1	Ignition Exciter
Z2	Engine Oil Temperature Bulb
Z5	Upper Fuel Tank Unit
Z6	Lower Fuel Tank Unit
Z10	Anticollsion Flasher

Figure 9-1. Equipment Location (Sheet 3 of 10) A

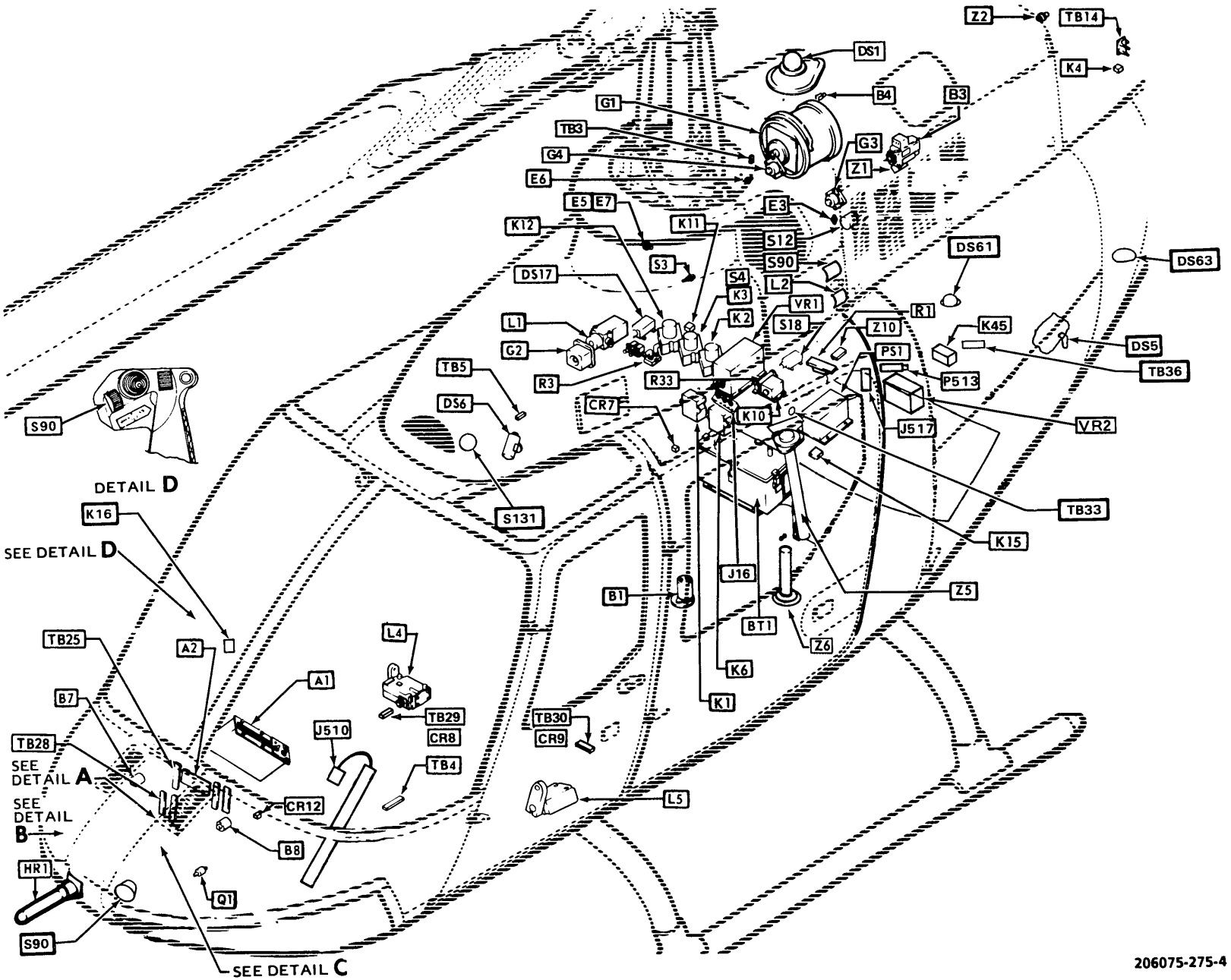

Figure 9-1. Equipment Location (Sheet 4 of 10)G (Prior to compliance with MWO 55-1520-228-50-32)

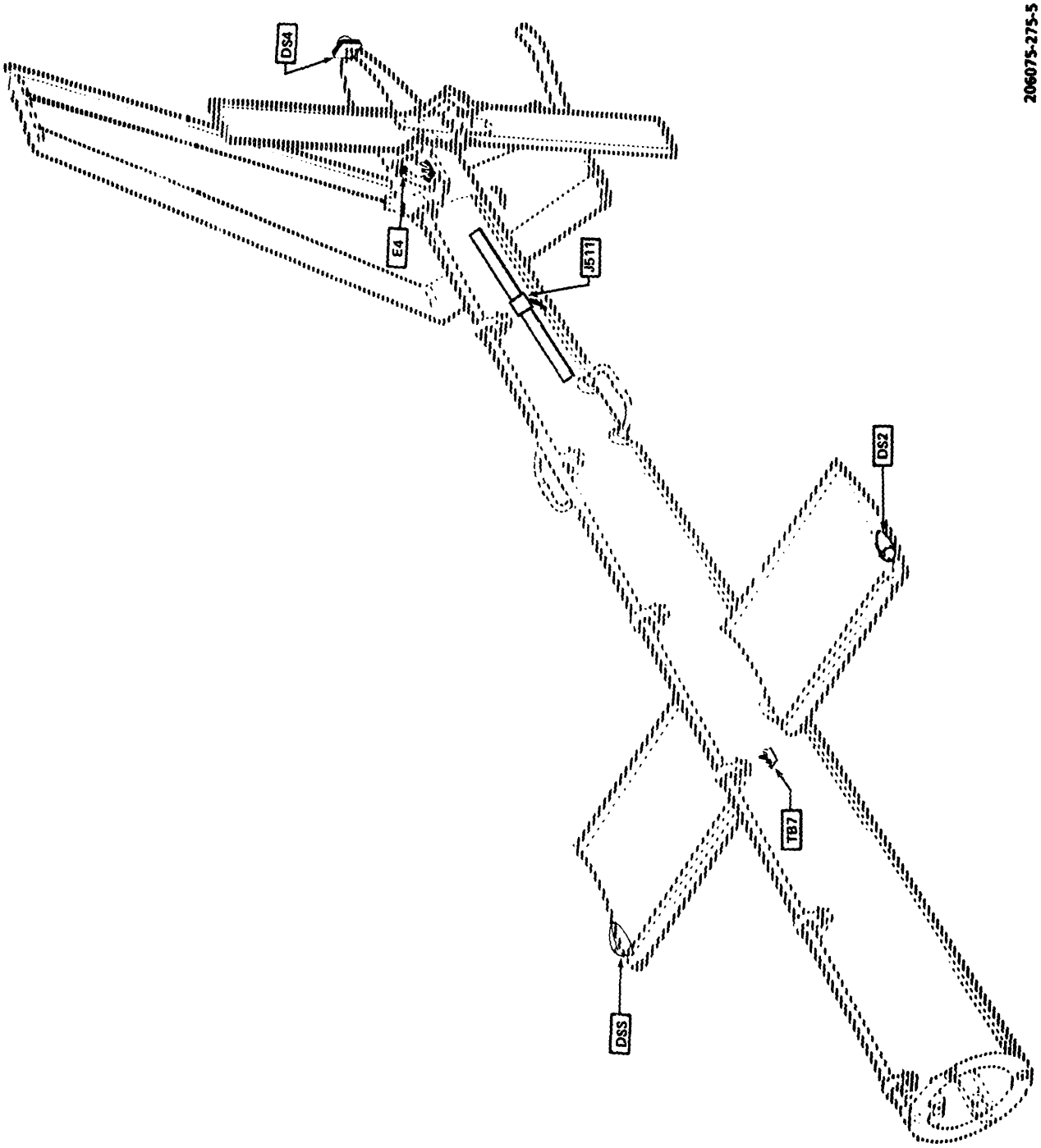

Figure 9-1. Equipment Location (Sheet 5 of 10)C (Prior to compliance with MWO 55-1520-228-50-32)

A1	Caution Panel
A2	Impedance Pad
B1	Fuel Pump
B3	Governor Control Actuator
B4	Engine De-ice Control
B7	Defog Blower (Right)
B8	Defog Blower (Left)
BT1	Battery
CR7	Diode, External Power Relay
CR8	Diode, Force Trim — Fore and Aft
CR9	Diode, Trim Lateral Force
CR12	Diode
DS1	Anticollision Light, Upper
DS2	Position Light, Left
DS3	Position Light, Right
DS4	Position Light, Tail
DS5	Anticollision Light, Lower
DS6	Cockpit Light
DS17	Audio Warning, Engine Out
E3	Chip Detector, Engine, Upper
E4	Chip Detector, Tail Rotor
E5	Chip Detector, Transmission
E6	Chip Detector, Engine, Lower
E7	Chip Detector, Transmission
G1	Starter-Generator
G2	Rotor Tach Generator
G3	Power Turbine Tach Generator
G4	Gas Producer Tach Generator
HR1	Pitot Tube Heater
J16	Receptacle, External Power
J517	Receptacle, Control Relay
K1	Relay, External Power
K2	Relay, Nonessential Bus
K3	Relay, Starter
K4	Relay, Engine Oil Bypass
K6	Relay, Battery
K8	Relay, Landing Light — Forward
K9	Relay, Landing Light — Aft
K10	Relay, Inverter Fail
K11	Relay, Generator Fail
K12	Relay, Line Control
K15	Relay, Heater
K16	Relay, Fuel Boost
K18	Relay, Night Vision Goggles
K19	Relay, Caution Light
K45	Relay, Engine Relight
L1	Solenoid, Hydraulic Bypass
L2	Solenoid, Heater
L4	Force Trim — Fore and Aft
L5	Force Trim — Lateral
P513	Plug, Time Delay Relay
PS1	Inverter
PS1	Power Supply
PS2	Power Supply
Q1	Transistor, Dimming Element
R1	Resistor, Turbine Outlet Temperature
R3	Resistor, Shunt
R33	Resistor, Position Light
S3	Switch, Transmission Oil Temperature
S4	Switch, Transmission Oil Pressure
S12	Switch, Fuel Pressure
S18	Sensor, RPM
S90	Switch, Heater Overheat
S90	Switch, Night Vision Goggles
TB1	Terminal Board, Instrument Panel
TB3	Terminal Board, Turbine Outlet
TB4	Terminal Board, Console
TB5	Terminal Board, Cockpit Light
TB6	Terminal Board, Lighting
TB7	Terminal Board, Position Lights
TB14	Terminal Board, Oil Level
TB25	Terminal Board, Instrument Lighting
TB26	Terminal Board, Ground
TB27	Terminal Board, Landing Lights
TB28	Terminal Board, Master Caution Panel
TB29	Terminal Board, Diode Instrument
TB30	Terminal Board, Diode Instrument
TB31	Terminal Board
TB32	Terminal Board, Interior Lights
VR1	Voltage Regulator
VR2	Voltage Regulator
Z1	Igniter
Z2	Engine Oil Temperature Bulb
Z5	Upper Fuel Tank Unit
Z6	Lower Fuel Tank Unit
Z10	Anticollision Flasher

Figure 9-1. Equipment Location (Sheet 6 of 10) C (Prior to compliance with MWO 55-1520-228-50-32)

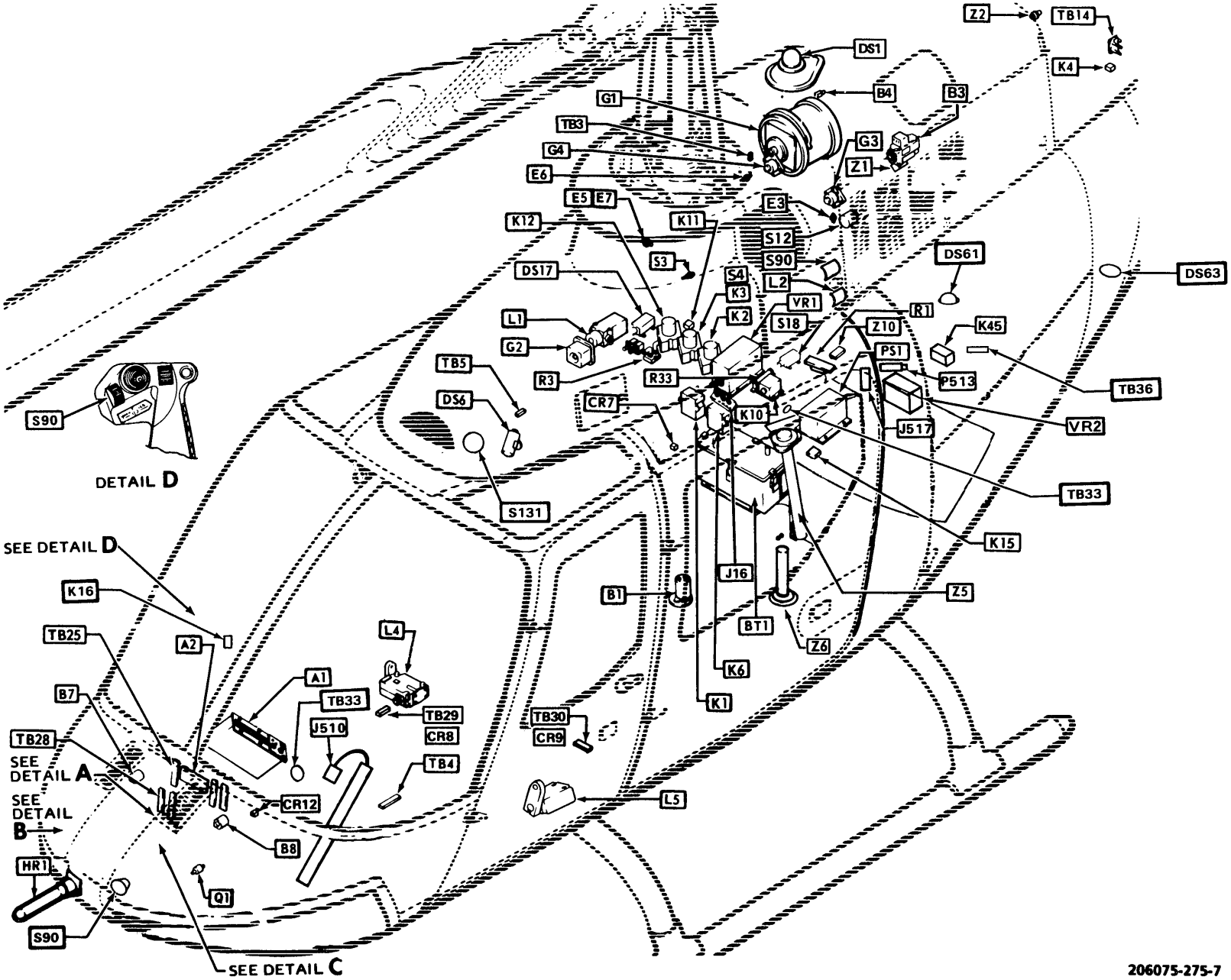

Figure 9-1. Equipment Location (Sheet 7 of 10) ■ (After compliance MWO 55-1520-228-50-32)

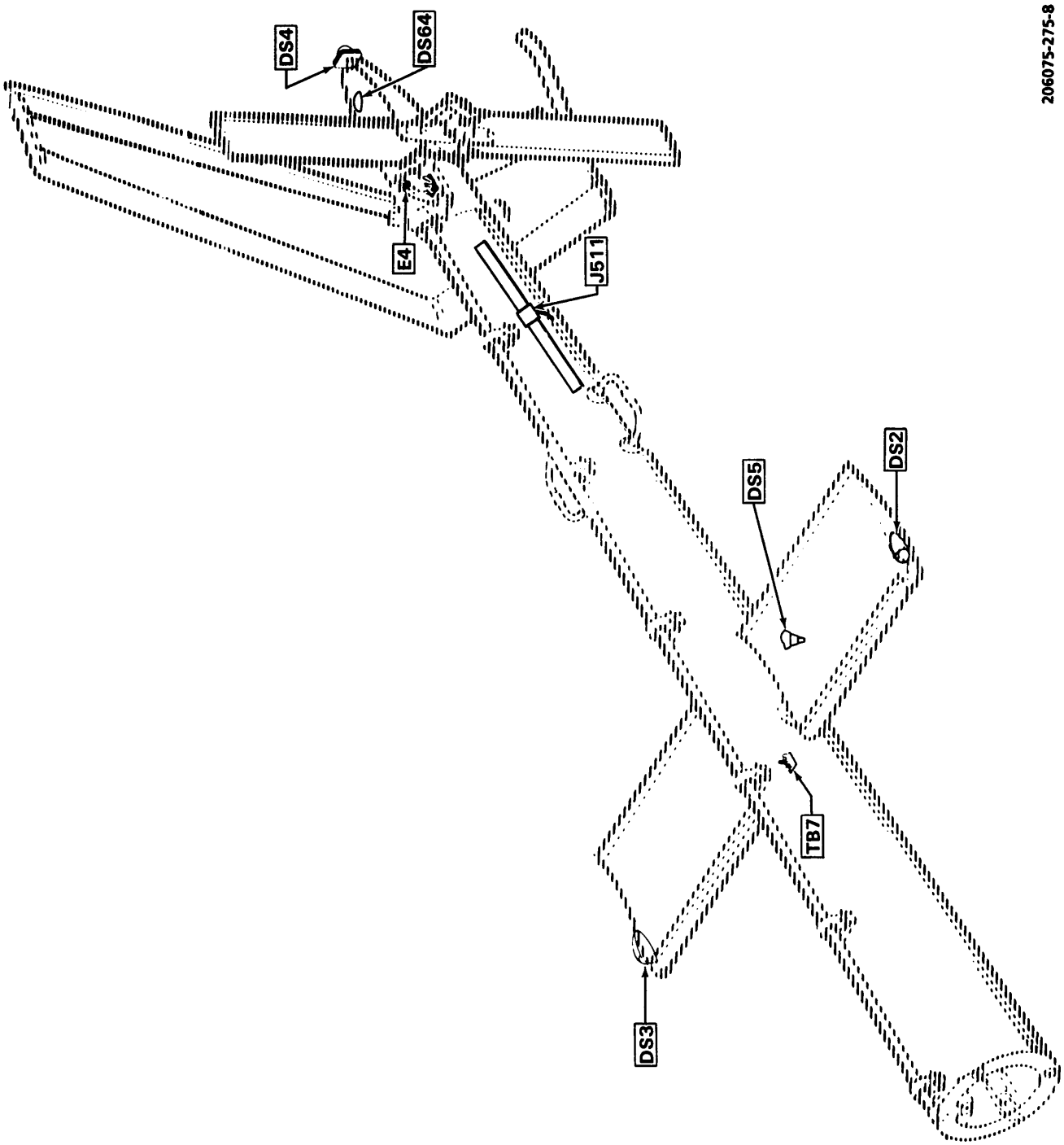

Figure 9-1. Equipment Location (Sheet 8 of 10) C (After compliance with MWO 55-1520-228-50-32)

A1	Caution Panel
A2	Impedance Pad
B1	Fuel Pump
B3	Governor Control Actuator
B4	Engine De-ice Control
B7	Defog Blower (Right)
B8	Defog Blower (Left)
BT1	Battery
CR7	Diode, External Power Relay
CR8	Diode, Force Trim — Fore and Aft
CR9	Diode, Trim Lateral Force
CR12	Diode
DS1	Anticollision Light, Upper
DS2	Position Light, Left
DS3	Position Light, Right
DS4	Position Light, Tail
DS5	Anticollision Light, Lower
DS6	Cockpit Light
DS17	Audio Warning, Engine Out
E3	Chip Detector, Engine, Upper
E4	Chip Detector, Tail Rotor
E5	Chip Detector, Transmission
E6	Chip Detector, Engine, Lower
E7	Chip Detector, Transmission
G1	Starter-Generator
G2	Rotor Tach Generator
G3	Power Turbine Tach Generator
G4	Gas Producer Tach Generator
HR1	Pitot Tube Heater
J16	Receptacle, External Power
J517	Receptacle, Control Relay
K1	Relay, External Power
K2	Relay, Nonessential Bus
K3	Relay, Starter
K4	Relay, Engine Oil Bypass
K6	Relay, Battery
K8	Relay, Landing Light — Forward
K9	Relay, Landing Light — Aft
K10	Relay, Inverter Fail
K11	Relay, Generator Fail
K12	Relay, Line Control
K15	Relay, Heater
K16	Relay, Fuel Boost
K18	Relay, Night Vision Goggles
K19	Relay, Caution Light
K45	Relay, Engine Relight
L1	Solenoid, Hydraulic Bypass
L2	Solenoid, Heater
L4	Force Trim — Fore and Aft
L5	Force Trim — Lateral
P513	Plug, Time Delay Relay
PS1	Inverter
PS1	Power Supply
PS2	Power Supply
Q1	Transistor, Dimming Element
R1	Resistor, Turbine Outlet Temperature
R3	Resistor, Shunt
R33	Resistor, Position Light
S3	Switch, Transmission Oil Temperature
S4	Switch, Transmission Oil Pressure
S12	Switch, Fuel Pressure
S18	Sensor, RPM
S90	Switch, Heater Overheat
S90	Switch, Night Vision Goggles
TB1	Terminal Board, Instrument Panel
TB3	Terminal Board, Turbine Outlet
TB4	Terminal Board, Console
TB5	Terminal Board, Cockpit Light
TB6	Terminal Board, Lighting
TB7	Terminal Board, Position Lights
TB14	Terminal Board, Oil Level
TB25	Terminal Board, Instrument Lighting
TB26	Terminal Board, Ground
TB27	Terminal Board, Landing Lights
TB28	Terminal Board, Master Caution Panel
TB29	Terminal Board, Diode Instrument
TB30	Terminal Board, Diode Instrument
TB31	Terminal Board
TB32	Terminal Board, Interior Lights
VR1	Voltage Regulator
VR2	Voltage Regulator
Z1	Igniter
Z2	Engine Oil Temperature Bulb
Z5	Upper Fuel Tank Unit
Z6	Lower Fuel Tank Unit
Z10	Anticollision Flasher

Figure 9-1. Equipment Location (Sheet 6 of 10) C (Prior to compliance with MWO 55-1520-228-50-32)

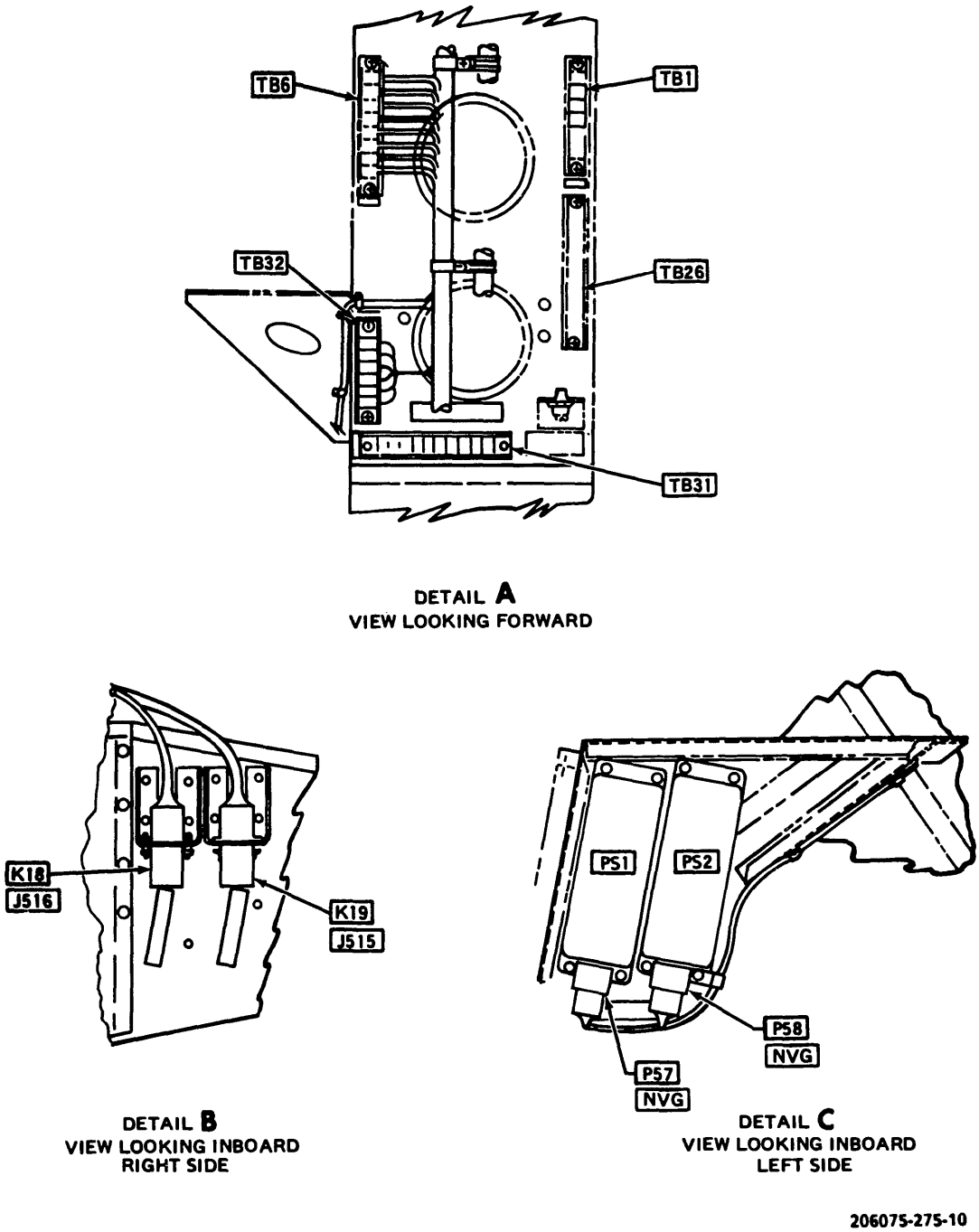

Figure 9-1. Equipment Location (Sheet 10 of 10) C

CAUTION

Battery switch will be in OFF position prior to connecting external power source.

9-7. TESTING — EXTERNAL POWER SYSTEM. Before connecting external power for the first time, check wiring for correct polarity and terminations at external power receptacle (J16).

NOTE

Ensure GEN and BUS reset circuit breaker is open.

a. Apply 28 Vdc reverse polarity between the small pin on external power receptacle (J16) and ground. Check that external power relay (K1) does not close. Remove 28 Vdc reverse polarity.

b. Connect an external 28 Vdc power source to external power receptacle. Energize the power source. Measure voltage on main dc bus in the overhead console. Check that bus voltage is within one volt of the external power source voltage.

c. Place NON-ESS BUS switch (S81) to MAN. Check that no voltage is present on the nonessential dc bus (located in the overhead console).

d. Ensure that GEN & BUS RESET circuit breaker is closed. Check that voltage on the nonessential dc bus is within one volt of external power source voltage.

e. Place NON-ESS BUS switch to NORM. Check that voltage on nonessential dc bus is within one volt of external power source voltage.

f. De-energize external power source. Check that there is no voltage on the essential dc bus.

9-8. TROUBLESHOOTING — EXTERNAL POWER SYSTEM. Refer to table 9-1 and figure F-8.

NOTE

Before using table 9-1, ensure all normal operational checks have been performed. If a malfunction exists which is not listed in table 9-1, notify the next higher level of maintenance.

9-9. EXTERNAL POWER RECEPTACLE.

9-10. DESCRIPTION — EXTERNAL POWER RECEPTACLE. The external power receptacle (J16) is a polarized receptacle used as contact point for external power plug-in.

9-11. INSPECTION — EXTERNAL POWER RECEPTACLE. Inspect the external power receptacle for the following:

a. Contact corrosion

b. Faulty insulation

c. Broken wires

d. Faulty contacts.

9-12. REMOVAL — EXTERNAL POWER RECEPTACLE.

a. Place the BAT switch to OFF and ensure battery is disconnected.

b. Remove attachment screws and extract receptacle enough to gain access to power cables.

c. Disconnect power cables and wrap terminals with electrical tape (C137).

9-13. INSTALLATION — EXTERNAL POWER RECEPTACLE.

a. Remove tape from wire ends and connect cables to receptacle.

b. Position receptacle in helicopter and install attachment screws.

9-14. EXTERNAL POWER RELAY.

9-15. DESCRIPTION — EXTERNAL POWER RELAY. The external power relay (K1) is an electrically operated switch between the external power receptacle and essential bus. It is controlled through the small positive pin from the external power source which energizes the circuit to the activating coil of the relay only when the external applied voltage is of proper polarity.

9-16. INSPECTION — EXTERNAL POWER RELAY. Inspect the external power relay for the following:

a. Broken pins

Table 9-1. Troubleshooting — External Power System

CONDITION / TEST OR INSPECTION	CORRECTIVE ACTION
1. Lack of power when external power plug is inserted into J16.	
STEP 1. Ensure connectors at attachment points to APU are installed correctly.	**If installed correctly, reverse polarity in plug.**
STEP 2. Ensure external power relay (K1) is operative.	**If inoperative, replace relay (K1).**
STEP 3. Check voltage output relay (K1).	**If below 28 (±0.5) Vdc, increase output or obtain APU with correct output.**
2. External power relay (K1) is energized with reverse polarity applied to EXT PWR receptacle.	
STEP 1. Check for condition of diode (CR7).	**Replace defective diode.**
STEP 2. Check wiring for condition, security, and continuity.	**Replace defective wiring.**

b. Discoloration

c. Any obvious damage.

9-17. REMOVAL — EXTERNAL POWER RELAY.

a. Place BAT switch to OFF. Remove external power and ensure battery is disconnected.

b. Remove attaching hardware and remove bus bar.

c. Disconnect wires from relay and tape ends using electrical tape (C137).

d. Remove attachment bolts and lift relay free from compartment.

9-18. INSTALLATION — EXTERNAL POWER RELAY.

a. Position relay and install mounting hardware

b. Remove tape and connect relay wires

c. Install and secure bus bar.

9-19. TROUBLESHOOTING — EXTERNAL POWER RELAY. Refer to table 9-1 for troubleshooting of external power relay (K1).

9-20. BATTERY AND GENERATOR SYSTEM.

9-21. DESCRIPTION - BATTERY AND GENERATOR SYSTEM. The battery (BT1) furnishes power through relay (K6) when the generator is inoperative. During normal operation, the generator portion of the STARTER-GENERATOR (G1) furnishes power at a regulated voltage for all dc electrical components on the helicopter. The battery is capable of supplying electrical power for four consecutive engine starts with 30 second elapsed time between starting cycles. In the event the starter-generator fails, the battery supplies all loads essential to flight. The starter generator, which is self-excited, normally switches onto the main power cables after the engine start procedure when the generator voltage exceeds the voltage on the bus by **0.30 to 0.42** volt. The line control relay (K12) connects generator power to the bus. The voltage regulator (VR1) operates the line control relay, regulates generator voltage, and provides protection against over-voltage (Figure 9-1 and F-8). generator current flowing through the shunt resistor (R3) allows the ammeter to indicate the amps being used by the operating circuits. The generator fail relay (K11) controls operation of nonessential bus relay (K2) and the generator caution light

9-22. TESTING - BATTERY AND GENERATOR SYSTEM.

a. Operational Check - Battery Circuits. Ensure that battery quick disconnect is connected to the battery. Place BAT switch to BAT position, Turn on electrical device operating from essential bus to determine if battery power is available at the essential bus.

b. Operational Check - General Circuitry. With engine at operating rpm, turn on generator switch and note indication on ammeter. Add load such as landing light and/or inverter.

c. Operational Check - Electrical Circuitry. Disconnect wires with P19C8 and P19D8 from positive terminal B on the starter-generator and connect them to the positive lead of external power source. Take care to isolate connection from helicopter structure. Connect negative lead of external power source to negative terminal E on the starter-generator. Place a jumper wire from terminal D to terminal E on the starter-generator. Disconnect wire P24A16 from starter-generator and take care to isolate wire from aircraft structure. Do not energize power source until specified in the following procedure.

NOTE

The following test shall be performed with the helicopter battery installed or an external 24 to 28 Vdc power source connected at the battery connector.

(1) Ensure that CAUTION PNL LTS circuit breaker is closed. Place BAT switch to BAT. Check that DC GENERATOR caution light is illuminated.

(2) Ensure that GEN FIELD circuit breaker is closed. Place the NON-ESS switch to NORM. Energize external power source and adjust to **28 (±1)** Vdc. Place GEN/RESET switch to RESET and then go to GEN. Check that the DC GENERATOR caution light is extinguished and that voltage on the essential and nonessential dc buses within one volt of external power source voltage.

(3) Ensure that LOADMETER circuit breaker is closed. Momentarily turn on a load such as the landing lights. Check that the helicopter ammeter reads upscale.

(4) Open GEN FIELD circuit breaker. Check that nonessential bus voltage is **zero**, that essential bus voltage is within one volt of battery voltage, and that the DC GENERATOR caution light is illuminated.

(5) Ensure that GEN FIELD circuit breaker is closed. Check that the results described in step (2) are obtained.

(6) Place BAT switch to OFF. Connect the voltmeter to the main dc bus (located on aft electrical shelf over the fuel cell). While monitoring the voltmeter, slowly decrease external power source voltage until voltage indication suddenly drops to **zero**. Connect the voltmeter to terminal A1 (generator side) on the line control relay K12. Check that the voltage indication is **18 (±1.8)** Vdc and that the DC GENERATOR caution light is illuminated.

CAUTION

DO NOT exceed 33 volts. Damage to equipment may occur.

(7) Reconnect the voltmeter to the main dc bus. While monitoring the voltmeter, slowly increase external power source voltage until voltage indication

suddenly deflect upscale. Check that voltage indication is **24 (±2.4)** Vdc and that the DC GENERATOR caution is extinguished.

CAUTION

DO NOT exceed 33 volts. Damage to equipment may occur.

(8) While monitoring the voltmeter, slowly increase external power source voltage until voltage indication suddenly drops to **zero**. Connect the voltmeter to terminal **A1** on line control relay. Check that the voltage indication is **32 (±1)** Vdc and that the DC GENERATOR caution light is illuminated.

(9) Place BAT switch to BAT. Place the GEN/RESET switch to RESET and the GEN. Check that the DC GENERATOR caution light remains illuminated (no voltage on the main dc bus).

(10) Decrease external power source voltage to approximately 28 volts. Place the GEN/RESET switch to RESET and the to GEN. Check the DC GENERATOR caution light is extinguished and the external power source voltage is present on the main dc bus.

(11) Place BAT switch to OFF and de-energize the external power source. Disconnect wires P19C8 and P19D8 from the positive lead of external power source and connect them to positive terminal B on the starter-generator. Disconnect negative lead of external power source from negative terminal E on the starter-generator, Remove jumper wire from terminal D and E on the starter-generator. Check that connections are properly mated, tight, and secure. Secure wire P24A16 to starter-generator.

9-23. TROUBLESHOOTING - BATTERY AND GENERATOR. Refer to Table 9-2.

NOTE

Before using Table 9-2, ensure all normal operational checks have been performed. If a malfunction exists which is not listed in Table 9-2, notify the next high level of maintenance.

Table 9-2. Troubleshooting — Battery and Generator

CONDITION TEST OR INSPECTION CORRECTIVE ACTION
1. BATTERY (BT1) WILL NOT HOLD A CHARGE.
Step 1. Check for excessive battery demand.
Use external power source, when possible, and check battery after operations completed.
Step 2. Check generator output voltage.
Adjust if necessary to maintain battery charge.
Step 3. Check battery for dead or unbalanced cells or broken partitions.
Replace battery.
Step 4. Check for broken wiring, short circuits, or grounded wire.
Repair or replace wiring.

Table 9-2. Troubleshooting — Battery and Generator — Continued

CONDITION

TEST OR INSPECTION

CORRECTIVE ACTION

2. Short battery life in service or excessive loss of electrolyte.

STEP 1. Check for electrolyte level below plate.

Replace battery.

STEP 2. Terminals corroded.

Clean terminals and connectors with fiber brush, rinse with clean water, and wipe dry.

STEP 3. Check for proper maintenance of battery and correct servicing (cells overfilled).

Replace battery. Check generator output and adjust if necessary.

3. Reverse voltage from battery to bus.

STEP 1. Check leads at battery plug.

Connect leads properly.

STEP 2. Battery charged in reverse direction.

Replace battery.

4. Battery toggle switch actuation fails to turn on power.

STEP 1. Check battery and connections.

Connect battery or if connected, check battery voltage at terminals. Replace battery if not charged.

STEP 2. Check for burned or corroded contacts or open coil.

Replace battery relay.

STEP 3. Check battery switch and circuitry.

Repair or replace defective switch or wiring.

5. Starter-generator produces voltage but ammeter does not register

STEP 1 Check ammeter circuit breakers, wiring, etc.

Repair or replace defective component or wiring of ammeter circuitry.

Table 9-2. Troubleshooting — Battery and Generator — Continued

CONDITION

TEST OR INSPECTION

CORRECTIVE ACTION

6. No voltage output from starter-generator.

STEP 1. Check generator switch in overhead console for 24 (±2.4 volts) at output terminal.

STEP 2. Check voltage regulator for continuity between terminals and residual magnetism.

Replace faulty regulator.

STEP 3. Check generator wiring continuity and field winding for open circuit.

Replace generator or repair wiring.

STEP 4. Check for sheared shaft or burned armature.

Replace starter-generator.

STEP 5. Check for shorted field winding or armature.

Replace generator.

STEP 6. Visually check brushes for binding or excessive wear.

Replace worn brushes, or if binding in holder, remove, clean, and reset brushes.

STEP 7. Check for dirty, pitted, or rough commutator.

If dirty — clean. If rough or pitted — replace starter-generator.

7. Movement of regulator adjustment does not alter voltage within normal range, ammeter fluctuates rapidly, or voltage varies excessively with changes in engine speed or electrical load.

STEP 1. Check voltage regulator and circuitry.

Repair or replace faulty regulator.

9-24. BATTERY.

CAUTION

Use an acetic acid solution to neutralize any spillage of the alkaline. Do not use a sodium bicarbonate (baking soda) solution.

9-25. DESCRIPTION - BATTERY.

a. The battery installation consists of a vented 24 volt 13 ampere hour nickel-cadmium battery (BT1) located in the avionics compartment (figure 9-1). This battery uses an alkaline electrolyte.

b. Batteries may be checked during normal helicopter operations as follows: A fully charged battery can be determined only by moving the BAT switch from BAT to OFF and observing the effect on the generator ammeter. If the change in indication is less than **5.00** amperes the battery is fully charged.

WARNING

Do not open battery compartment and attempt to remove overheated battery. In no case should CO2 fire extinguisher be used to cool overheated battery and/or to displace battery gases trapped within battery compartment.

The electrolyte used in nickel-cadmium batteries contains potassium hydroxide (KOH), which is a caustic chemical agent. Serious and deep burns of body tissue will result if the electrolyte comes in contact with the eyes or any part of the body. Use rubber gloves, rubber apron, and protective eye covering when handling the battery. If accidental contact with the electrolyte is made, use ONLY clean water and immediately (seconds count) flush contaminated areas. Continue flushing with large quantities of clean water. Seek medical attention immediately. Before removing or installing the battery, ensure that the battery switch is off and the battery has cooled down if overheated. Removal or installation of the battery connector while battery is under load may result in explosion, electrical arcing and possible severe burns to personnel. Take every possible step to keep the nickel-cadmium battery as far away as possible from the lead-acid type of battery. Do not use the same tools and materials (screwdrivers, wrenches, gloves, apron, etc.) for both types of batteries. Anything associated with the lead-acid battery, even the air, must never come in contact with the nickel-cadmium battery or its electrolyte. Even a trace of sulfuric acid fumes from a lead-acid battery may result in damage to the nickel-cadmium battery. If sulfuric acid has been inadvertently mixed with the electrolyte in the battery, the upper areas of the cells will appear greenish in color. In such cases, the battery must be replaced.

9-26. INSPECTION - BATTERY.

a. Check for loose connections at battery disconnect.

b. In cases where the battery fluid has spilled or corroded the battery floor, take the following action.

(1) Inspect the two battery vent tubes to make certain that they are not clogged or contaminated on the inside with battery fluid residue.

(2) To repair or replace damaged floor area refer to paragraph 2-237.

(3) Inspect the battery vent tubes to see that they project outside the helicopter approximately one inch and the scarf on the forward tube faces directly forward and the scarf on the aft tube faces directly aft.

c. Check for damage to individual cell cases (distortion due to overcharge, cracks, or leaks).

d. Check connectors and terminals for corrosion.

e. Inspect condition of pressure relief portion of vent cap.

9-27. INSPECTION BATTERY QUICK-DISCONNECT. Disengage battery cable from battery receptacle and inspect cable connector for:

a. Evidence of corrosion or pitting of helix.

b. Excess free-play in handwheel-worm assembly.

c. Evidence of arcing or burn marks on helix.

CAUTION

To avoid damage to cable connector, work-aid inspection gage used below must be inserted and withdrawn in a straight line.

d. Insert **0.385** inch diameter end of inspection gage (fabricate locally per figure 9-7) into each helix to a depth of **0.437** inches. Fit shall be snug with a force to remove greater than one pound.

e. Insert **0.370** inch diameter end of inspection gage into each helix to a depth of **0.437** inches. Fit shall be snug with a force to remove greater than one pound.

f. Replace cable quick-disconnect connector if discrepancies are noted during above inspection.

9-28. CLEANING - BATTERY.

a. Remove battery and clean.

b. Clean area around battery in accordance with TM 1-1500-344-23 with battery removed.

c. Saturate battery tray felt pad in a **3%** solution of boric acid and water (if battery tray and felt pad is installed).

9-29. REMOVE - BATTERY.

a. Check that BAT switch is OFF, and external power is not applied. Open compartment door.

b. Remove battery quick-disconnect by turning knob counterclockwise.

c. Disconnect two vent tubes from battery case.

d. Remove mounting bolts and washers, lift battery and tray from compartment.

e. Close compartment door.

9-30. REPAIR - BATTERY. Battery and tray must be removed from helicopter to service or repair.

9-31. INSTALLATION - BATTERY AND TRAY (FIGURE 9-2).

a. Check to ensure that BAT switch is OFF and external power is not applied. Open compartment door.

CAUTION

Battery floor threaded inserts may be stripped out if torque is exceeded on battery case to floor attaching bolts. Ensure bolts do not bottom out on floor inserts. Add washers as required.

b. Place battery and tray assembly on a shelf aligned for connections. Install bolts and washers. Torque **20 TO 25** inch-pound, then coat bolts with sealing compound (C131).

c. Connect two vent tubes to battery case and tighten clamps. Scarf on forward vent tube must face forward. Scarf on aft vent tube must face aft.

d. Seal battery case rubber adapter to vent tube with adhesive (C7).

e. Insert cable connector in battery receptacle and secure by turning knob clockwise.

f. Adjustment of voltage regulator is required after installation of replacement battery.

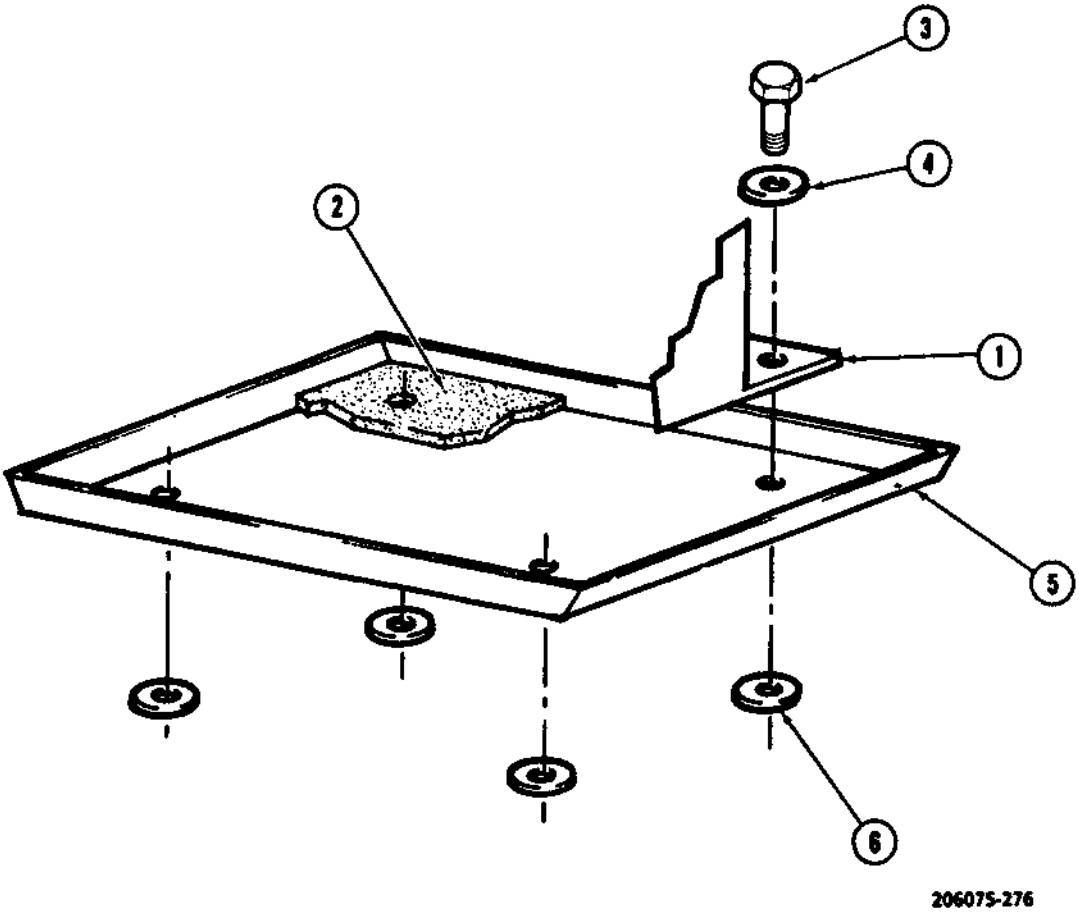

1. Battery
2. Felt Pad
3. Bolt
4. Washer
5. Tray
6. Synthane Washer

Figure 9-2. Battery and Tray Installation

9-31.1. INSTALLATION OF INCREASED CAPACITY BATTERY. (22 AMP)

a. Remove avionics equipment, as required, to provide a free work area at battery location. Disconnect and remove existing battery, hold down hardware and battery tray and insulator, (if installed).

b. Protect any remaining exposed equipment in the work area. Cover all electrical connectors with plastic film and tape or appropriate caps to prevent entry of metal chips, paint, etc.

c. Thoroughly clean battery deck area and repair any damage or corrosion.

d. Remove ADF antenna located below aft electronics compartment to provide access to the lower face of the battery deck.

CAUTION

Use caution when drilling holes through avionics compartment floor skin to avoid damage to amplifier located under compartment deck.

e. Lay out and drill holes through upper and lower of avionics compartment floor to the dimensions and locations shown in Figure 9-2.1, sheet 2.

f. Crush back honeycomb core of floor panel to dimensions shown in Figure 9-2.1, sheet 2, for each individual insert and plug and sleeve location.

g. Mix a sufficient quantity of adhesive (C-12). Fill each cavity with adhesive and install inserts, sleeves and plugs, as shown in Figure 9-2.1, sheet 2, in accordance with TM 1-1500-204-23.

h. Thoroughly clean and vacuum all metal chips and debris from avionics compartment. Apply one coat of epoxy primer (C-116), followed by two coats of lacquer (C-88), to the battery deck area.

WARNING

Acetone is extremely flammable and toxic to eyes, skin, and respiratory tract. Wear protective gloves and goggles/face shield. Avoid repeated or prolonged contact. Use only in well-ventilated areas (or use approved respirator as determined by local safety/industrial hygiene personnel). Keep away from open flames, sparks, hot surfaces or other sources of ignition.

i. Fabricate the two tube assemblies (7) and (8), Figure 9-2.1, sheet 1, to dimensions shown in Figure D-122. Clean the connecting surfaces of the adapters (5) and tubes (6), Figure 9-2.1, sheet 1, with acetone and bond with adhesive (C-7) after installation of battery.

j. Install tiedown rod assemblies (4) into tiedown blocks (3) Figure 9-2.1, sheet 1.

k. If desired, to insulate battery from avionics compartment floor, make insulator 11.75 inches by 9.65 inches, (0.020 thickness), from insulator sheet, MIL-P-15037. Position insulator inside retention blocks (2) and tiedown blocks (3) Figure 9-2.1, sheet 1.

l. Reinstall ADF antenna.

m. Check to ensure that BAT switch is OFF and that external power is not applied. Install battery and utilizing existing cable connector, secure cable connector to the battery by turning knob clockwise.

n. Tighten tiedown rod wing nuts and secure with lockwire (C96).

o. Connect the two vent tube assemblies (7) Figure 9-2.1, sheet 1, to battery case and tighten clamps. Bond adapters (5) and tubes (6) per step i.

p. Functionally test electrical system. Adjustment of voltage regulator is required after installation of replacement battery.

q. Make weight and balance changes for installation of 22 AMP battery on appropriate forms.

9-32. BATTERY RELAY.

9-33. DESCRIPTION — BATTERY RELAY. The battery relay (K6) located on forward bulkhead of avionics compartment is an electrically operated switch controlling battery power to essential BUS.

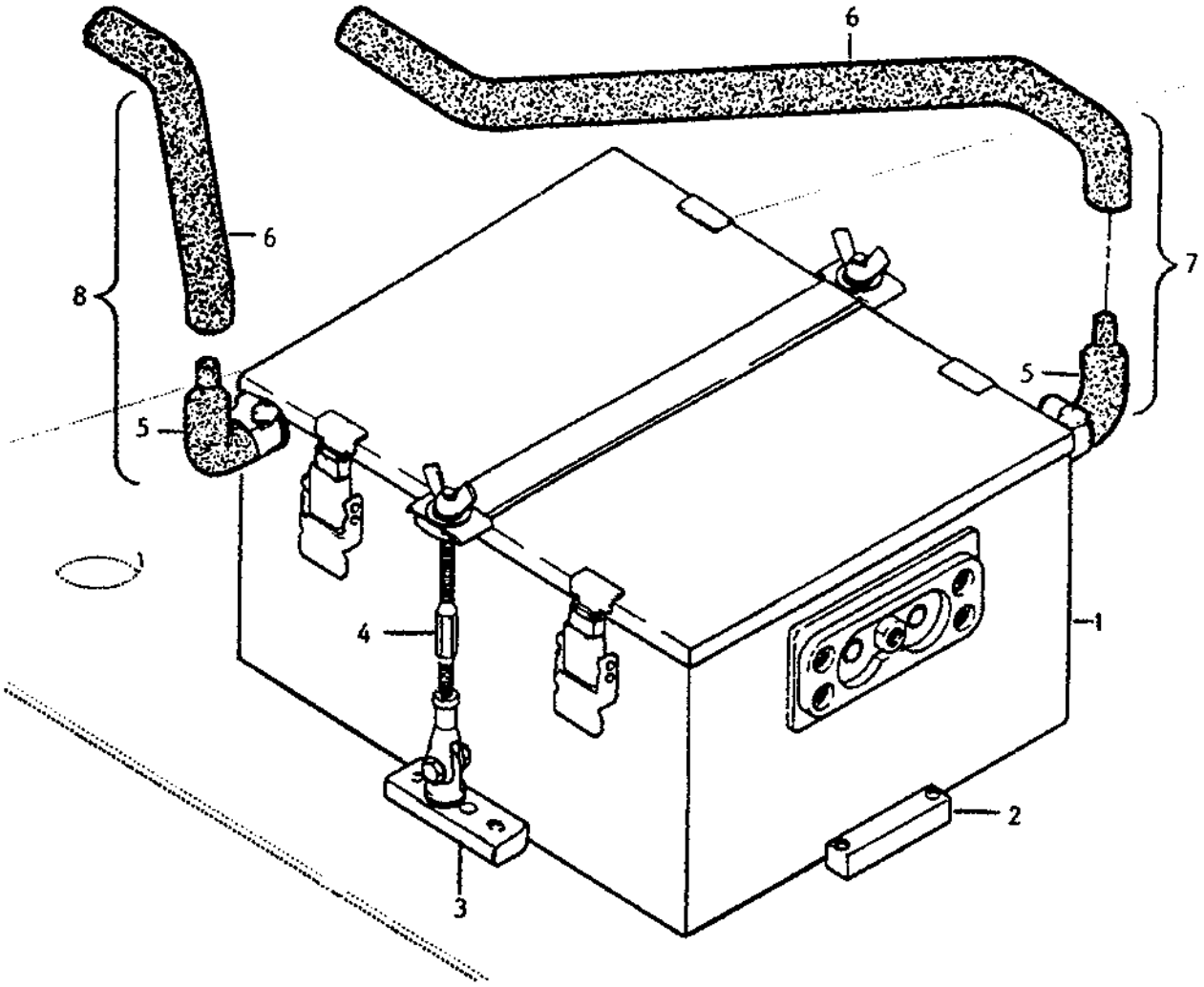

1. BATTERY
2. RETENTION BLOCK
3. TIEDOWN BLOCK
4. TIEDOWN ROD ASSEMBLY
5. TUBE ADAPTER
6. TUBE
7. TUBE ASSEMBLY P/N 206-075-544-1
8. TUBE ASSEMBLY P/N 206-075-544-5

Figure 9-2.1. Alternate Battery Installation (Sheet 1 of 2)

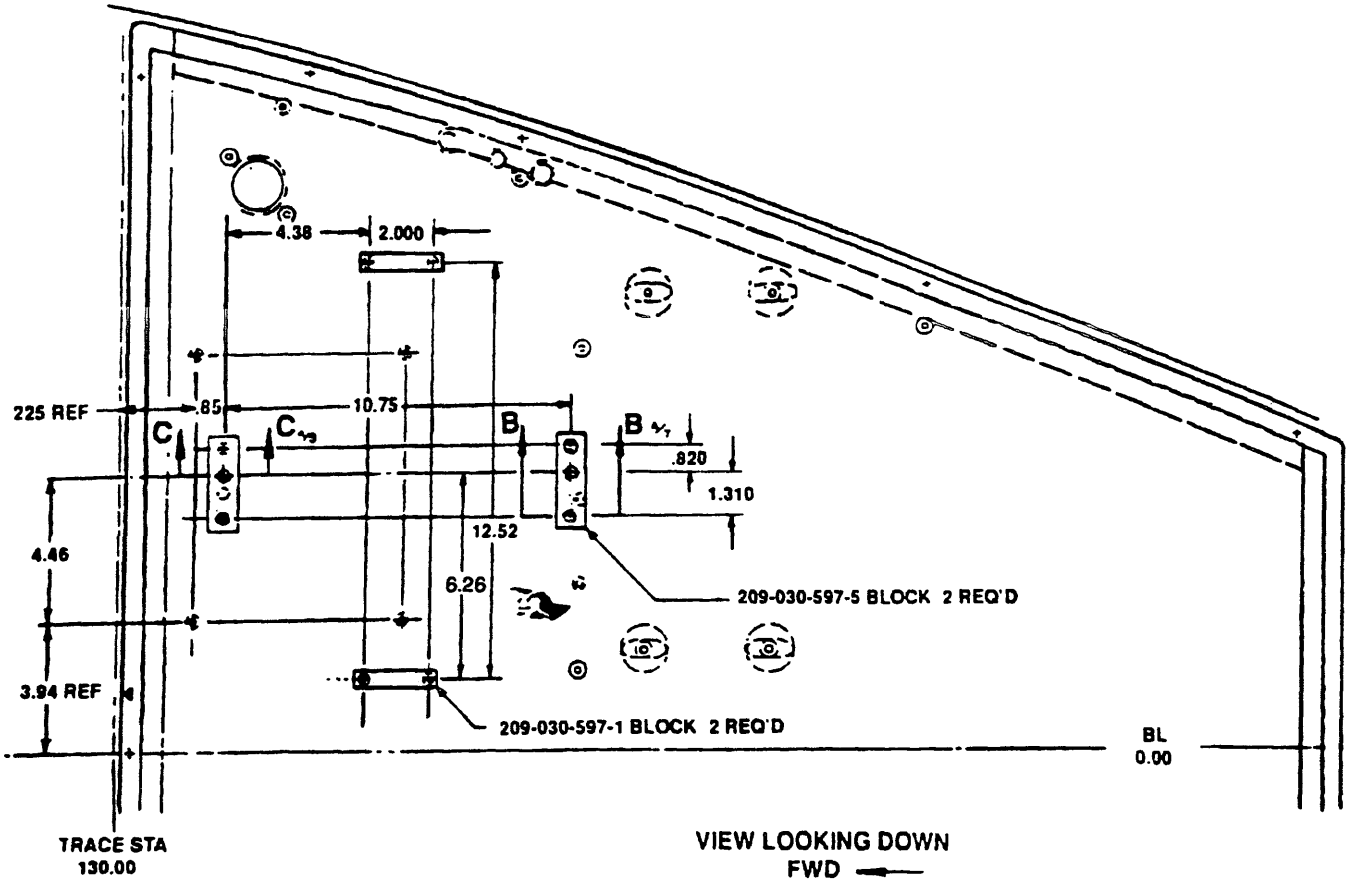

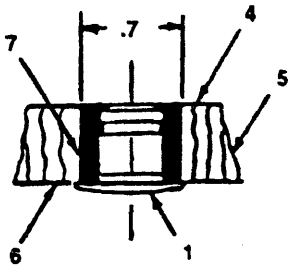

.190
.196 8 HOLES THRU UPPER SKIN

.376
.381 8 HOLES THRU LOWER SKIN & CORE

(FOR BATTERY RETENTION)

DETAIL B-B

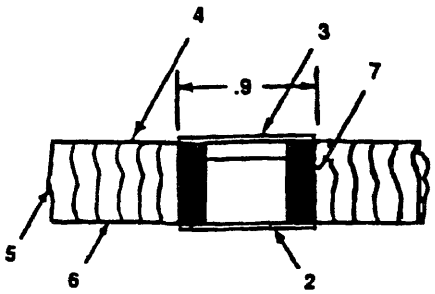

.499
.506 2 HOLES THRU PANEL

(FOR BATTERY TIEDOWN)

DETAIL C-C

1. INSERT (8 REQ'D)
2. SLEEVE (2 REQ'D)
3. PLUG (2 REQ'D)
4. UPPER SKIN
5. CORE
6. LOWER SKIN
7. ADHESIVE

Figure 9-2.1. Alternate Battery Installation (Sheet 2 of 2)

9-34. INSPECTION — BATTERY RELAY. Inspect the battery relay for the following:

a. Contact corrosion

b. Faulty insulation

c. Broken wires

d. Faulty contacts.

9-35. REMOVAL — BATTERY RELAY.

a. Set BAT switch in the OFF position and ensure battery is disconnected.

b. Remove attaching hardware and remove bus bar from relay.

c. Disconnect wires from relay and tape ends using electrical tape (C137).

d. Remove attachment screws and lift relay free.

9-36. INSTALLATION — BATTERY RELAY.

a. Position relay and install attaching screws.

b. Remove protective tape and connect wire to relay.

c. Position bus bar on relay and secure with attaching hardware.

d. Connect battery.

9-37. TROUBLESHOOTING — BATTERY RELAY. Refer to table 9-2 for troubleshooting.

9-38. STARTER-GENERATOR. (See figure 9-4).

9-39. DESCRIPTION - STARTER-GENERATOR. The starter-generator (G1) is located on the underside of the engine to the right of the helicopter center line. This unit is used to start the engine, charge the battery and supply power for the operation of dc equipment. Refer to figure 9-1.

9-40. CLEANING — STARTER-GENERATOR. Clean exterior of unit with a clean cloth moistened in naphtha (C22) and wipe dry.

9-41. INSPECTION — STARTER-GENERATOR.

a. Check for warped or cracked terminal board or terminal damage.

b. Remove brush cover. Check brush cover for dents, loose or bent pins, broken spring, or damaged insulation.

c. Inspect for oil, dirt, or other foreign material that has entered the unit. Remove material with a vacuum cleaner only.

CAUTION

Do not use compressed air for internal cleaning of starter-generator.

The model 23022-20 series, spline shaft, can get out of line with the centerline if any force is applied to it upon removal from the aircraft. This will cause a false wobble indication when checking for wobble. (This is not to be confused with bending of the spline shaft which necessitates shaft replacement.)

d. Rotate the splined shaft to check for fan rub, and/or bearing condition. The shaft should rotate smoothly and not exhibit any slop or wobble. Return defective starter-generators to the repair/overhaul facility.

NOTE

Do not confuse shaft slop or wobble with an out-of-round dampener plate.

e. Inspect commutator for a smooth bright appearance with a light filming.

f. Inspect drive splines for minimum diameter of **0.729**-inch over two **0.096**-inch diameter pins.

g. Inspect upper and lower brushes (4 total).

(1) Brush leads must be flexible and have a bright appearance.

(2) Brushes must have more than 1/4 life remaining (figure 9-3).

(3) Brushes must be properly seated. (A **100%** set in direction of rotation and a minimum **75%** axially is mandatory.)

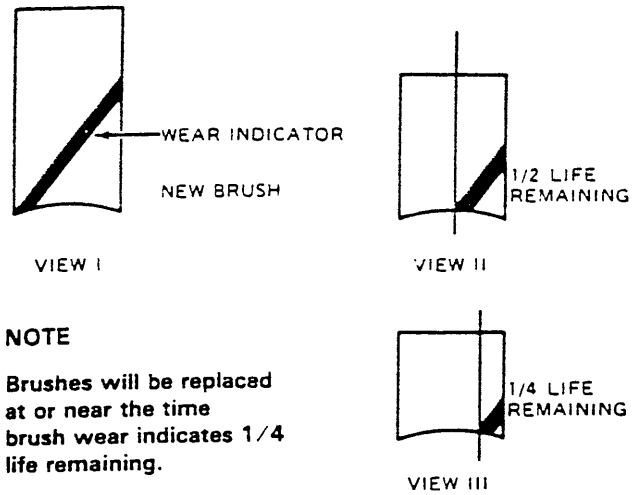

NOTE

Brushes will be replaced at or near the time brush wear indicates 1/4 life remaining.

Figure 9-3. Starter-Generator Brush Wear

CAUTION

Ensure that brush leads are secure and do not rub or hang on brush holder. If brushes pass inspection they must be returned to their exact original position in the starter-generator.

h. Reinstall brush band cover and attaching screws. If any of the brushes will require replacement before next scheduled overhaul or inspection, remove for repair. Refer to paragraphs 9-42, 9-43, and 9-44.

9-42. REMOVAL — STARTER-GENERATOR.

CAUTION

It is mandatory that the starter-generator be supported by whatever means necessary whenever the clamp is loosened or until the clamp has been installed and properly torqued (45 TO 55 INCH-POUNDS). Unit must never be allowed to support its own weight through drive spline engagement. If this precaution is not observed, damage to the shaft will result, causing premature failure of the shear section.

a. Disconnect all electrical power from helicopter. Disconnect electrical connectors from starter-generator. Protect ends of wires with electrical tape (C137).

b. Loosen clamp and remove air duct from starter-generator.

c. Loosen nut which secures clamp (6, figure 9-4), and with starter-generator (7) held flush to the adapter (5) pad, unlatch clamp (6).

d. Remove clamp (6) and slide starter-generator (7) straight aft from adapter (5) until splined male drive-shaft is free of splined female shaft in engine.

NOTE

Do not rotate splined shaft unnecessarily.

e. Lower starter-generator to deck of helicopter.

f. Remove adapter (5), if necessary, as follows:

(1) Remove four nuts (8) and four washers (9) attaching adapter (5) to engine.

(2) Remove adapter (5) and gasket (4) from mounting studs.

9-43. REPAIR — STARTER-GENERATOR. (AVIM)

a. Remove fan cover assembly (17, figure 9-5) by removing four screws (18).

b. Remove screws (10) and remove brushes (9).

c. Remove locknut (16) and fan (15).

d. Remove screws (6) and washer (7, 8, and 2). Remove commutator and bell (1) from stator and housing assembly.

e. Clean commutator with a clean, lint-free cloth moistened in denatured alcohol (C59). Inspect to the following limits:

(1) **2.030** minimum outside diameter.

(2) Bars under cut to **0.040** inch maximum wide by **0.032** inch deep.

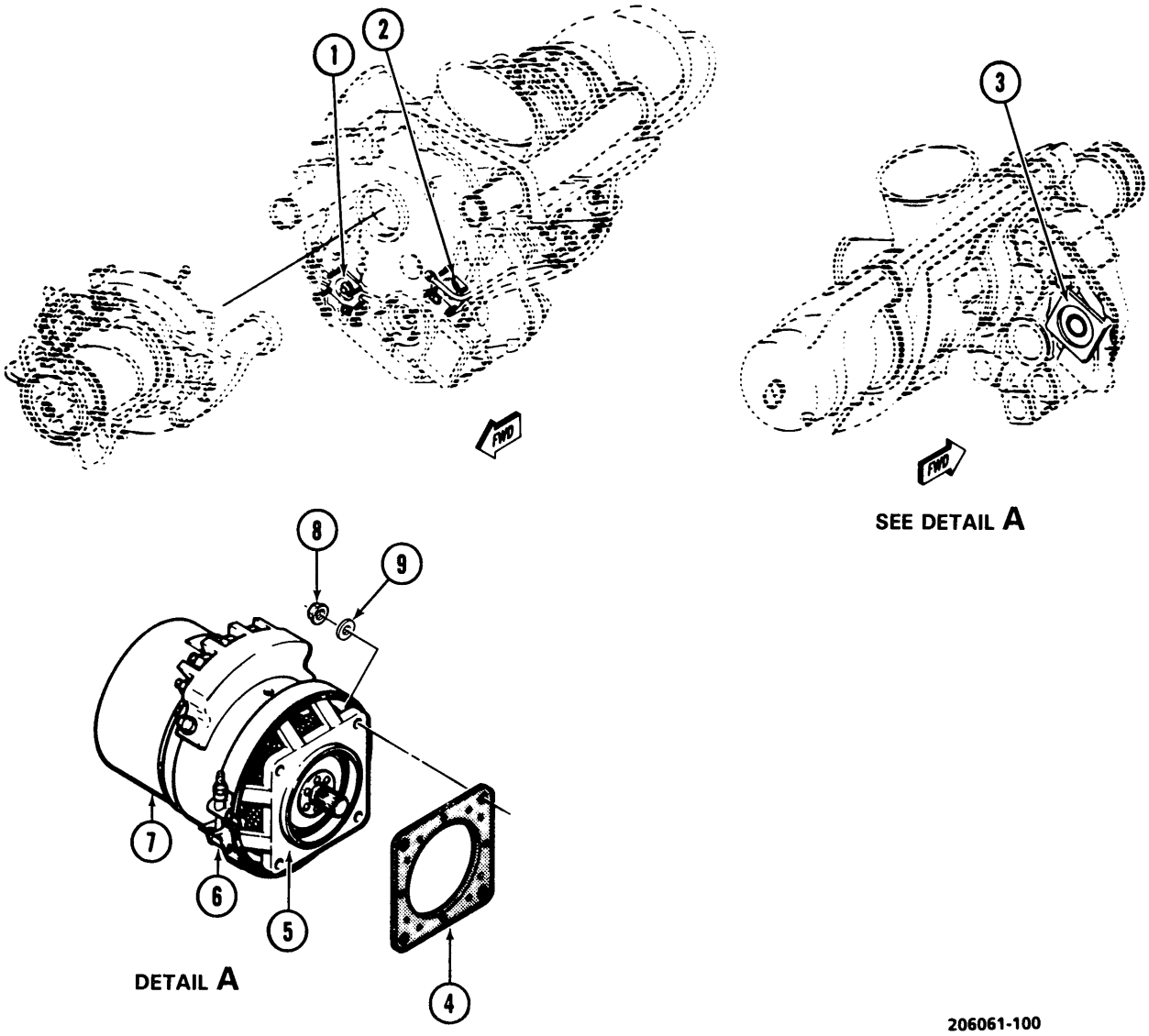

1. Gas Producer Tachometer Generator Pad
2. Power Turbine Tachometer Generator Pad
3. Starter-Generator Pad
4. Gasket
5. Adapter
6. Clamp
7. Starter-Generator
8. Nut
9. Washer

Figure 9-4. Starter-Generator and Tachometer Generator Mounting Pads

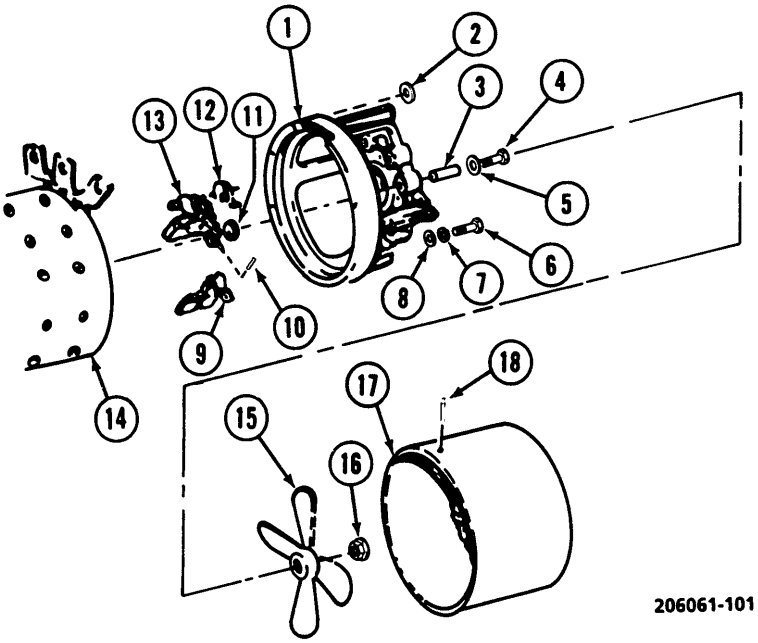

1. Commutator and Bell
2. Washer
3. Sleeving
4. Screw
5. Washer
6. Screw
7. Washer, Lock
8. Washer, Flat
9. Brush
10. Screw
11. Washer, Nonmetallic
12. Spring
13. Brush Holder
14. Stator and Housing Assembly
15. Fan
16. Nut, Self-locking
17. Cover Assembly
18. Screw

Figure 9-5. Starter-Generator

NOTE

New brushes must be properly seated on the commutator surface. Failure to do so can result in excessive sparking, which causes burning and pitting of the commutator.

f. Preliminary brush seating.

(1) Place a strip of sandpaper (C124) or finer, slightly wider than the combined width of the two brush halves, around the commutator with the sand side outward. Cut the sandpaper to 1/8-inch less than the commutator circumference. Secure one end of the sandpaper strip to the commutator surface with masking tape, so that the taped end will lead in the direction of rotation, and the other end will remain loose.

(2) Position commutator and bell (1) on stator and housing assembly (14). Secure with screws (6) and washers (7, 8, and 2).

(3) Install brushes (9) and screws (10).

(4) With brushes seated against sandpaper, carefully rotate the armature by hand in the normal direction of rotation until a full seat is obtained on each brush.

(5) Remove the sandpaper and blow away carbon dust with dry, compressed air.

(6) Install fan (15) and locknut (16).

(7) Install cover assembly (17) and four screws (18).

g. Brush Run-In Equipment. The following equipment is required for the brush run-in procedure:

(1) The 30-volt dc power source.

(2) A set of V-blocks, padded with sponge rubber, to support the starter-generator.

(3) A single-pole, single-throw switch capable of handling 300 amperes.

(4) A rheostat having a minimum rating of **10** ohms, **15** amperes.

(5) A tachometer of suitable range, or a stroboscopic light for indicating starter-generator speed.

(6) A resistor in the armature circuit having a rating of **0.100** ohms, **200-500** amperes.

NOTE

Instead of running the starter-generator as a motor, brush run-in may be accomplished by using a generator test stand to drive the starter-generator, and operate as a generator with 50-100 amperes load at 28-30 volts, and 8000 to 10,000 rpm. The instant-filming type brushes that are used in this starter-generator do not required prolonged run-in to produce a satisfactory film on commutator.

h. Brush Run-In Procedure. Refer to figure 9-6.

(1) Place the starter-generator on the V-blocks for support and connect terminal E of the starter-generator to the negative terminal of the dc power source. Refer to figure 4-5 for identification of terminals on the starter-generator.

(2) Connect terminal C to the positive terminal of the dc supply in series through the resistor and single-pole, single-throw switch.

(3) Connect terminal A to the switch through the variable rheostat.

(4) Rotate the rheostat control to the minimum resistance setting and close the switch. The generator should start and run as a motor rotating in a clockwise direction, as viewed from the commutator end.

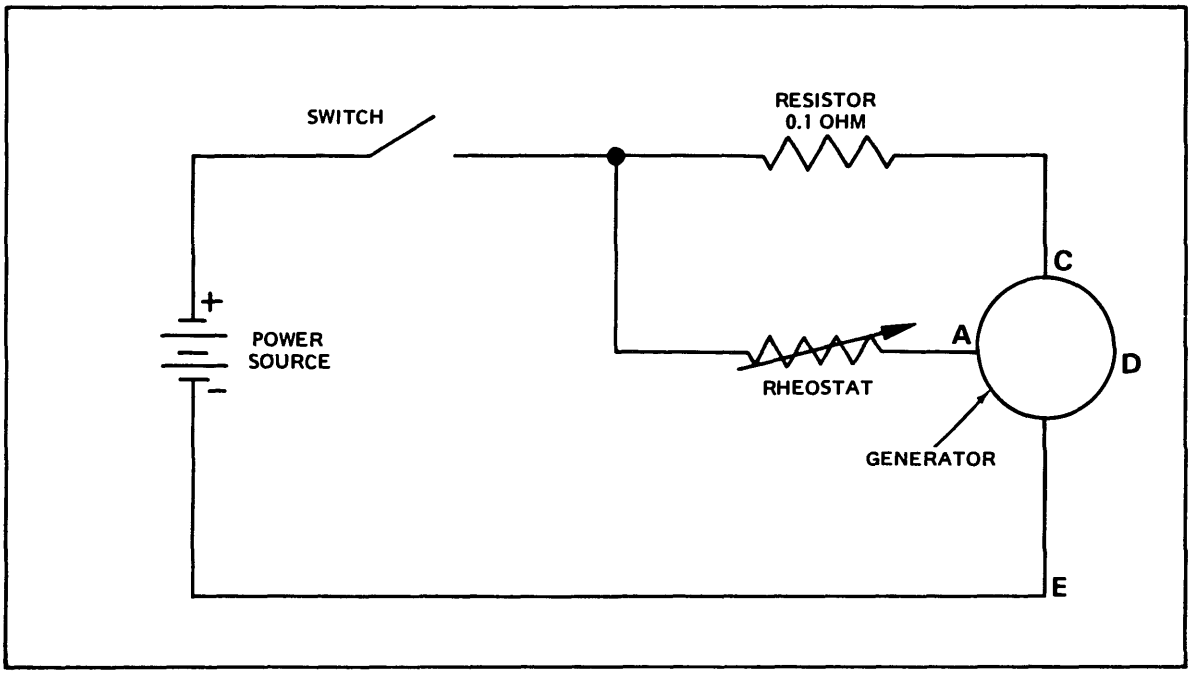

206061-102

Figure 9-6. Brush Run-in Diagram

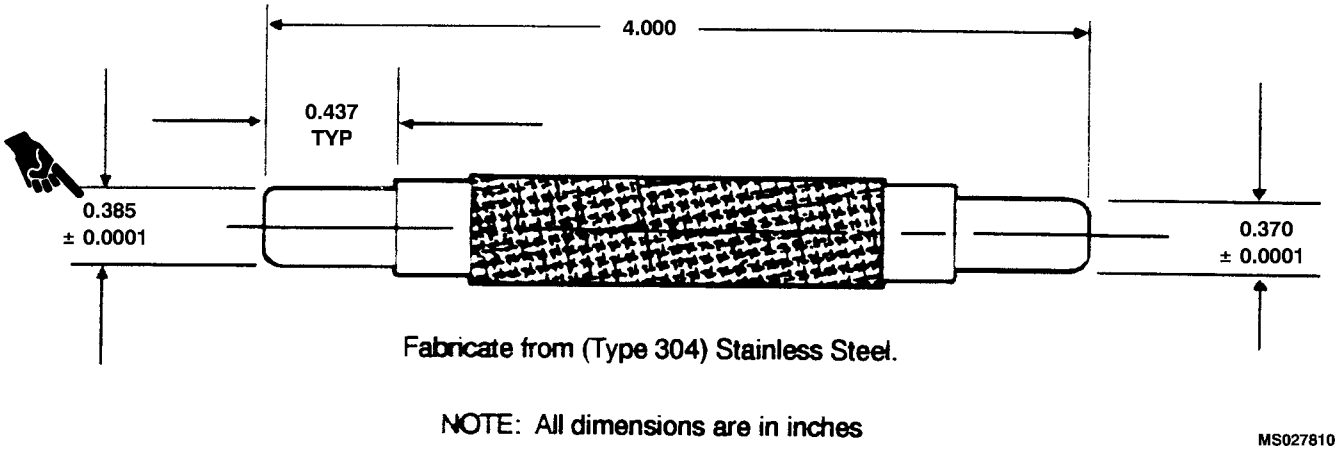

Figure 9-7. Work and Inspection Gage

(5) Adjust rheostat until generator revolves at approximately **5000** rpm. Allow generator to operate until brushes are seated a minimum of **100%** in direction of rotation and **90%** in axial direction.

(6) Blow out all carbon dust with clean, dry, compressed air.

9-44. INSTALLATION - START-GENERATOR.

a. Install adapter (5, Figure 9-4) if removed, and gasket (4) on engine starter-generator pad (3) studs and secure with four washers (9) and four nuts (8).

WARNING

When installing starter with part number 23032–022 use adapter with part number 23032–2201. When installing starter with part number 150SG111Q-1 use adapter with part number 150SG1040. Failure to comply with warning may result in generator failure.

b. Clean driveshaft splines and engine mating splines thoroughly. Apply a film of grease (C77) to the splines.

NOTE

Grease (C158) can be used as an alternate to lubricate shaft spline on starter-generator.

c. Slide driveshaft splines into mating splines and firmly support unit against adapters (5) pad.

NOTE

Prior to installation of start-generator, rotate splined shaft to check for fan rub and clearance between fan and screen.

d. With bolt unlatched, place clamp (6) on starter-generator (7) and adapter (5).

e. Latch bolt and tighten nut snugly on clamp.

f. Tap clamp in several places with a rubber mallet to align and seat clamp. Repeat tapping with mallet and torque nut to **45 TO 55 INCH-POUNDS**. Install lockwire, (C96) on clamp (6).

g. Remove electrical tape, connect electrical wires, and secure installation hardware (Figure 4-5). Restore electrical power to helicopter.

h. Install air duct on starter-generator and tighten clamp.

i. Voltage regulator check is required after replacement of starter-generator. Reference paragraph 9-52.

9-45. GENERATOR SHUNT.

9-46. DESCRIPTION — GENERATOR SHUNT. The generator shunt (R3) is located on the equipment shelf above the avionics compartment and provides a small voltage drop, proportional to the current, to operate the ammeter.

9-47. INSPECTION — GENERATOR SHUNT. Inspect generator shunt for corrosion, scratches, deformation, discoloration, or obvious damage.

9-48. REMOVAL — GENERATOR SHUNT.

a. Place BAT switch in OFF position and ensure battery is disconnected.

b. Remove upholstered panel, located aft of rear seat, to gain access to generator shunt.

c. Disconnect electrical wiring and cover ends with tape (C137).

d. Remove mounting screws and washers and remove shunt.

9-49. INSTALLATION — GENERATOR SHUNT.

a. Position shunt and install mounting hardware.

b. Remove tape and connect wiring.

c. Replace upholstered panel.

9-50. VOLTAGE REGULATOR.

9-51. DESCRIPTION - VOLTAGE REGULATOR

WARNING

An improperly adjusted voltage regulator may cause high battery temperature and thermal runaway, resulting in battery destruction and possible helicopter damage.

A static type voltage regulator (VR1) is located on the equipment shelf above the avionics compartment and is adjustable for **26.0 to 29.0** volt generator output by an adjustment screw located on end of regulator adjacent to connector. The regulator is a component of the basic DC power system and functions in conjunction with the other components of the system to prevent the generator from being connected to the line until operating voltage is attained. It prevents reverse current flow and holds the generator connected to line unless voltage drops to a point where continued operation would be detrimental to the electrical equipment. It also provides increased resistance in the shunt field circuit to weaken the shunt field of the starter-generator during start operation, and maintains approximately **1.0** volt positive applied to generator terminal A during start operation to maintain generator residual magnetism. **C** An additional static type voltage regulator (VR 2) is located on the equipment shelf above the avionics compartment and is adjustable to a 6-volt output by use of an adjusting screw located on the upper surface. The regulator is a component of the night vision goggle system and functions to supply the system with a consent voltage. It protects against undercurrents and overvoltage.

9-52. ADJUSTMENT - VOLTAGE REGULATOR (INSTALLED).

a. (VR1) Set multimeter to the appropriate scale to measure 28 VDC. Connect positive lead DC bus located adjacent to voltage regulator by turning the adjustment screw on the face clockwise to increase voltage and counterclockwise to decrease voltage. Set regulator as follows:

NOTE

To measure voltage adjustment (VR1), place positive lead of meter on essential bus terminal of relay (K12). Position negative lead on a ground terminal. To preclude frequent voltage regulator setting changes, the ambient ground level temperature must be considered as a mean (average) value. For example, if the voltage regulator is checked during the month of December in the northeastern United States and the ambient temperature at that time of day is 28°C (82°F), it is doubtful if that temperature would be a mean value, but rather a daily high; therefore, maintenance personnel must consider the mean or average weekly ambient temperature rather than the ambient temperature on a single day.

(1) (VR 2) Set multimeter to the appropriate scale to measure 28 VDC. Connect the positive lead to pin W at caution panel P-64 (figure F-34) and negative lead to airframe ground. Adjust voltage regulator by turning the adjustment screw, on upper surface of regulator, clockwise to increase voltage and counterclockwise to decrease voltage.

(2) Electrical components normally depend upon a constant voltage supply from the generator. Generator voltage output is controlled by the voltage regulator which requires precision adjustments as follows:

(a) Run aircraft engine at normal RPM/percent.

(b) Battery switch in the normal on position and generator on.

NOTE

Adjust each voltage regulator independently with other generator(s) turned off.

(c) Ensure that all communications, navigation and instruments are on and all circuit breakers in. This is to provide a load for aircraft DC bus.

(d) Connect positive probe of a voltmeter (AN/USM-451 or an equivalent with a DC voltage scale accuracy of 1 percent) to any convenient point of battery/essential bus and connect negative probe of voltmeter to a convenient aircraft ground. If a 1 percent voltmeter is not available, an AN/USM-223 or equivalent multimeter may be used; however, aircraft regulator should be readjusted using a 1 percent accurate voltmeter at the earliest possible time.

(e) Read and record voltage.

(f) Using table on next page, adjust voltage regulator according to seasonal average high (ambient ground level) temperature:

AMBIENT GROUND LEVEL TEMPERATURE	VOLTAGE REGULATOR SETTING VOLTS
Winter: 0°C/32°F	28.5 (±0.2) volts (VR1) 6 (±0.2) volts (VR2)
Summer: 27°C 80°F or higher	27.0 (±0.2) volts (VR1) 6 (±0.2) volts (VR2)
Fall and Spring:	
0°C/32°F	28.0 (±0.2) volts (VR1)
TO	
27°C/80°F	6 (±0.2) volts (VR2)

NOTE

On standby/auxiliary 28 volts DC electrical system, adjust voltage regulators 1 volt lower than normal.

(g) Reduce DC load by turning off equipment that was turned on in step (c) above. DC bus voltage should be the same as in step (f) above. If aircraft DC voltage varies more than 0.5 volts between load and no load condition, shut-in engine according to normal operating procedure and replace regulator.

9-53. INSPECTION - VOLTAGE REGULATOR.

a. Visually check voltage regulator for cracked case.

b. Inspect voltage regulator for damaged contact pins.

c. Check for secure mounting of voltage regulator.

9-54. REMOVAL - VOLTAGE REGULATOR.

a. Place BAT switch in OFF position and ensure battery is disconnected.

b. Disconnect electrical connector and protect with cap or tape (C137).

c. Remove four mounting screws and washers.

d. Lift regulator from shelf.

9-55. REPAIR - VOLTAGE REGULATOR. Replace with serviceable like item and dispose of locally.

9-56. INSTALLATION - VOLTAGE REGULATOR.

a. Position regulator and install four mounting screws and washer.

b. Remove cover and connect electrical connector to regulator.

c. After a new or different voltage regulator has been installed; adjust voltage regulator. Refer to paragraph 9-52.

9-57. LINE CONTROL RELAY (K12).

9-58. DESCRIPTION - LINE CONTROL RELAY. The line control relay (K12), located on equipment shelf above the avionics compartment, is a component of the basic DC power system and functions in conjunction with the other power system components. Operation is controlled by the voltage regulator to close or open the circuit between the generator and the essential bus.

9-59. INSPECTION - LINE CONTROL RELAY. Visually inspect line control relay for broken pins, discoloration, security of mounting, and obvious damage.

9-60. REMOVAL - LINE CONTROL RELAY.

a. Place BAT switch in OFF position and ensure battery is disconnected.

b. Remove bus bar from relays (K2, K3, and K12).

c. Disconnect wires and tape ends.

d. Remove mounting screws and washers and lift relay from shelf.

9-61. INSTALLATION - LINE CONTROL RELAY.

a. Position relay on shelf and install mounting hardware.

b. Remove tape and connect wires.

c. Install bus bar on relays (K2, K3, and K12).

9-62. TROUBLESHOOTING - LINE CONTROL RELAY. Refer to table 9-2 and figure F-8.

9-63. GENERATOR FAIL RELAY.

9-64. DESCRIPTION - GENERATOR FAIL RELAY. The (K11) generator fail relay is located on the equipment shelf above the avionics compartment. Its coil is connected in parallel with the coil of the line control relay and is supplied with generator power from terminal H of the voltage regulator. Its purpose is to control operation of the DC generator caution light and nonessential bus relay when the nonessential bus switch is in the **NORM** position.

9-65. INSPECTION - GENERATOR FAIL RELAY. Inspect the generator fail relay for obvious damage such as broken pins, discoloration, security of mounting, etc.

9-66. REMOVAL - GENERATOR FAIL RELAY.

a. Place BAT switch in OFF position and ensure battery is disconnected.

b. Disconnect wires from relay, identify and tape ends.

c. Remove screws, spacers, and washers and remove relay.

9-67. INSTALLATION - GENERATOR FAIL RELAY.

a. Position relay on shelf and install spacers, washers, and screws.

b. Remove covers from wire ends and connect wires to proper terminals.

9-68. TROUBLESHOOTING - GENERATOR FAIL RELAY. Refer to figure F-8.

9-69. NONESSENTIAL BUS RELAY.

9-70. DESCRIPTION — NONESSENTIAL BUS RELAY. The nonessential bus relay (K2) is an electrically operated switch between the main bus and the nonessential bus and is controlled by either the generator fail relay or the nonessential bus switch (S1).

9-71. INSPECTION — NONESSENTIAL BUS RELAY. Inspect relay for obvious damage, broken pins, discoloration, security of mounting, etc.

9-72. REMOVAL — NONESSENTIAL BUS RELAY.

a. Place BAT switch in OFF position and ensure battery is disconnected.

b. Remove bus bar from relays (K2, K3, and K12).

c. Disconnect wires from relay and identify and tape ends with electrical tape (C137).

d. Remove mounting bolts and washers and remove relay from shelf.

9-73. INSTALLATION — NONESSENTIAL BUS RELAY.

a. Position relay on shelf and install attaching bolts and washers.

b. Remove tape from wires and connect to proper terminals.

c. Install bus bar on relays (K2, K3, and K12).

9-74. TROUBLESHOOTING — NONESSENTIAL BUS RELAY. Refer to figure F-8.

9-75. FUEL BOOST PUMP SYSTEM.

9-76. DESCRIPTION — FUEL BOOST PUMP SYSTEM. The fuel boost pump system consists of one electrically operated fuel boost pump (B1) submerged in the fuel cell and accessible from the bottom of the fuselage. The pump is energized from a circuit breaker in the overhead console or FUEL BOOST switch on instrument panel. The boost pump can also be activated through the fuel boost relay (K16) by depressing the starter switch or through actuation of the fuel pressure switch (S12). Refer to figures 9-1 and F-18.

9-77. TESTING — FUEL PUMP SYSTEM.

a. Close FUEL BOOST PUMP circuit breaker or FUEL BOOST switch. Check that fuel boost pump operates.

b. Open FUEL BOOST PUMP circuit breaker or FUEL BOOST switch. Check that fuel boost pump stops operating.

9-78. TROUBLESHOOTING — FUEL PUMP SYSTEM. Refer to table 9-3 and figure F-17 for troubleshooting of the fuel boost pump system.

NOTE

Before using table 9-3, ensure all normal operational checks have been performed. If a malfunction exists which is not listed in table 9-3, notify the next higher level of maintenance.

9-79. INSPECTION — FUEL BOOST PUMP SYSTEM. Refer to paragraph 10-19 for inspection of the fuel boost pump.

9-80. REMOVAL — FUEL BOOST PUMP SYSTEM. Refer to paragraph 10-20 for removal of the fuel boost pump.

9-81. INSTALLATION — FUEL BOOST PUMP. Refer to paragraph 10-22 for installation of the fuel boost pump.

9-82. GOVERNOR CONTROL SYSTEM.

9-83. DESCRIPTION — GOVERNOR CONTROL SYSTEM. The governor control system allows pilot control of the governor setting and consists of GOV CONT 5 ampere circuit breaker, a governor control switch (S5), and a governor control actuator (B3). Refer to figures 9-1 and F-9.

9-84. TESTING — GOVERNOR CONTROL SYSTEM.

a. Ensure that GOV CONT circuit breaker is closed. Press GOV RPM switch to INCR. Check that governor control actuator retracts.

b. Press GOV RPM switch to DECR. Check that linear actuator extends.

Table 9-3. Troubleshooting — Fuel Pump System

CONDITION / TEST OR INSPECTION	CORRECTIVE ACTION
1. Low pressure flow or no fuel flow to engine.	
STEP 1. Check circuit breaker in overhead console for engagement.	**Engage or replace circuit breaker if required.**
STEP 2. Check continuity of wiring at boost pump connector.	**Repair or replace wiring if continuity does not exist.**
STEP 3. Check for low or no fuel boost pump output pressure.	**Replace defective boost pump.**
STEP 4. Check for clogged filter	**Clean or replace filter element.**

9-85. TROUBLESHOOTING — GOVERNOR CONTROL SYSTEM. Refer to table 9-4 and figure F-9.

NOTE

Before using table 9-4, ensure all normal operational checks have been performed. If a malfunction exists which is not listed in table 9-4, notify the next higher level of maintenance.

9-86. GOVERNOR CONTROL SWITCH.

9-87. DESCRIPTION — GOVERNOR CONTROL SWITCH. The governor control switch (S5), located in the pilot collective switch box, is a double-pole, double-throw, spring-loaded, momentary contact switch that enables the pilot to increase or decrease the governor rpm actuator setting. With the switch in INCR position, the circuit to the actuator motor is completed and allows motor to move arm in one given direction. With the switch in DECR position the polarity to the actuator motor is reversed, allowing the actuator arm to move in the opposite direction. When the switch is in rest position, circuit is de-energized. Refer to figure F-9.

9-88. INSPECTION — GOVERNOR CONTROL SWITCH. Refer to paragraph 9-128.

9-89. REMOVAL — GOVERNOR CONTROL SWITCH. Refer to paragraph 9-117.

9-90. INSTALLATION — GOVERNOR CONTROL SWITCH. Refer to paragraph 9-130.

9-91. GOVERNOR CONTROL LINEAR ACTUATOR.

CAUTION

The instructions contained in par 9-91 through 9-105 are applicable to P/N 206-062-721-1 (vendor P/N 65A120) only. No repairs are authorized on P/N 206-062-721-11 (vendor P/N 7185-1).

9-92. DESCRIPTION — GOVERNOR CONTROL LINEAR ACTUATOR. The governor control linear actuator (B3, figure 9-1 and 9-8) is located on the forward side of the engine and is a motor-actuated device operated by the governor switch (S5) on the pilot collective stick to allow engine output speed to be varied over a normal range.

NOTE

Refer to paragraphs 4-113, 4-114, and 4-115 for inspection, removal, and installation procedures for the governor control linear actuator.

Table 9-4. Troubleshooting — Governor Control System

CONDITION

TEST OR INSPECTION

CORRECTIVE ACTION

1. Linear actuator fails to respond when governor RPM switch is positioned to INCR or DECR positions.

STEP 1. Check for defective or open circuit breaker in overhead console.

Replace faulty circuit breaker.

STEP 2. Check for faulty wiring or corroded or burned switch contacts.

Repair or replace wiring or switch.

STEP 3. Check connections at actuator for correct hookup.

Refer to figure F-9 for correct connection and correct faulty hookup.

STEP 4. Check condition of actuator.

Replace faulty actuator.

2. Actuator moves in opposite direction to selected position.

STEP 1. Check for leads connected to wrong terminals on actuator.

Refer to figure F-9 and connect correctly.

9-93. DISASSEMBLY — GOVERNOR CONTROL LINEAR ACTUATOR. (AVIM) Refer to figure 9-8.

a. Remove screw (2, figure 9-8) and cover (1).

b. Remove nut (3), washer (4), and screws (5).

c. Remove nuts (6 and 7) and washers (8). Remove terminal board (9).

d. Remove sealing compound from joints and grooves with a plastic or wooden scraper to free parts for disassembly.

e. Slide cover and nut assembly (10) partially off actuator until leads of filter (11) prevent further removal. Push filter (11) down until studs on top of filter are clear of cover and nut assembly. Remove cover and nut assembly from actuator.

f. Unsolder filter (11) leads at motor (22).

CAUTION

Use a wrench to hold output shaft assembly (56) during performance of following step to prevent damage to actuator.

g. Loosen nut (13) and remove rod end bearing (12). Remove nut (13) from rod end bearing.

h. Remove screws (15). Remove plate and bearing assembly (14).

i. Mounting plate assembly (16) and housing group (61) are a matched assembly. Tag these parts for reassembly on the same actuator.

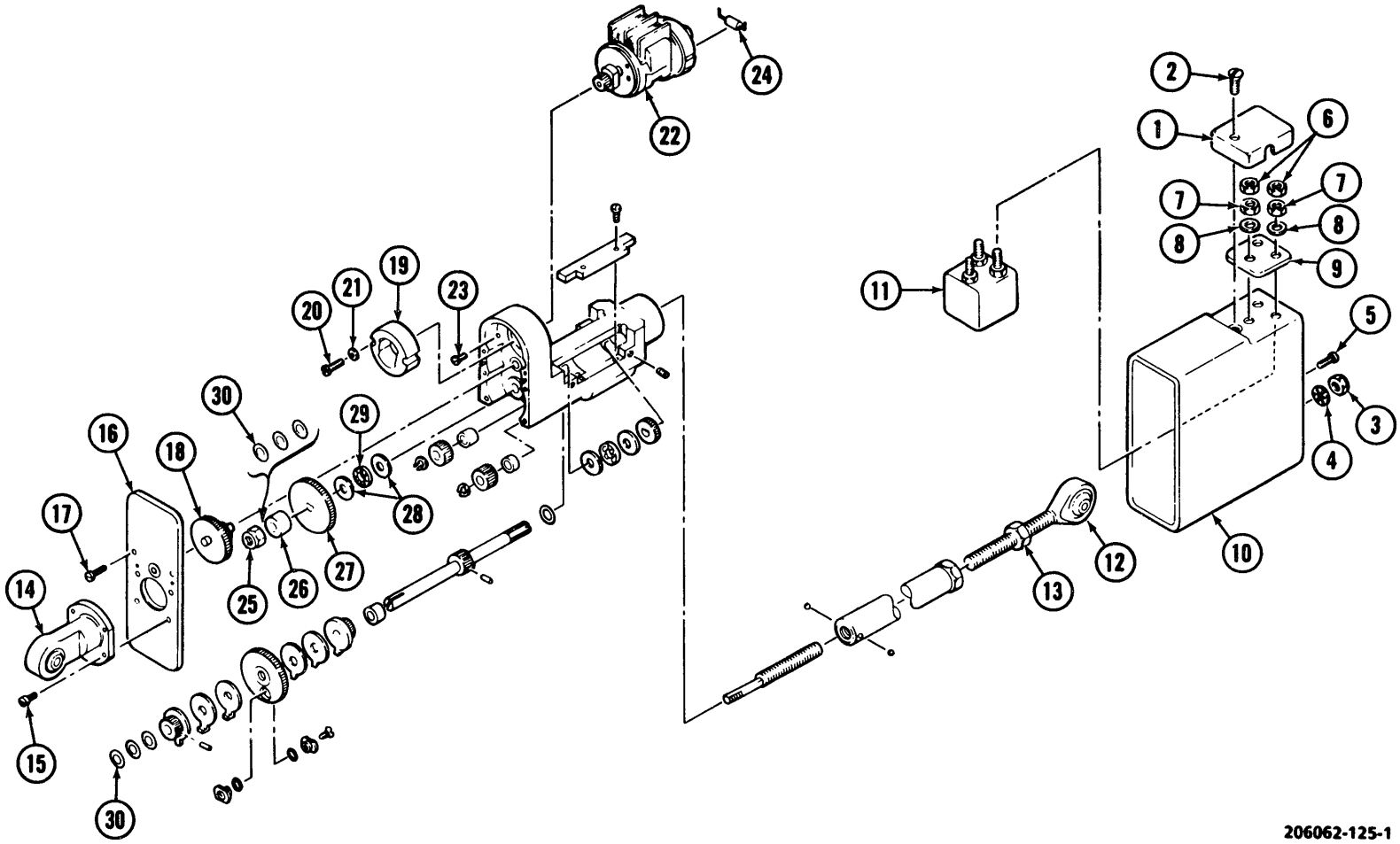

Figure 9-8. Governor Control Linear Actuator Assembly (Sheet 1 of 3)

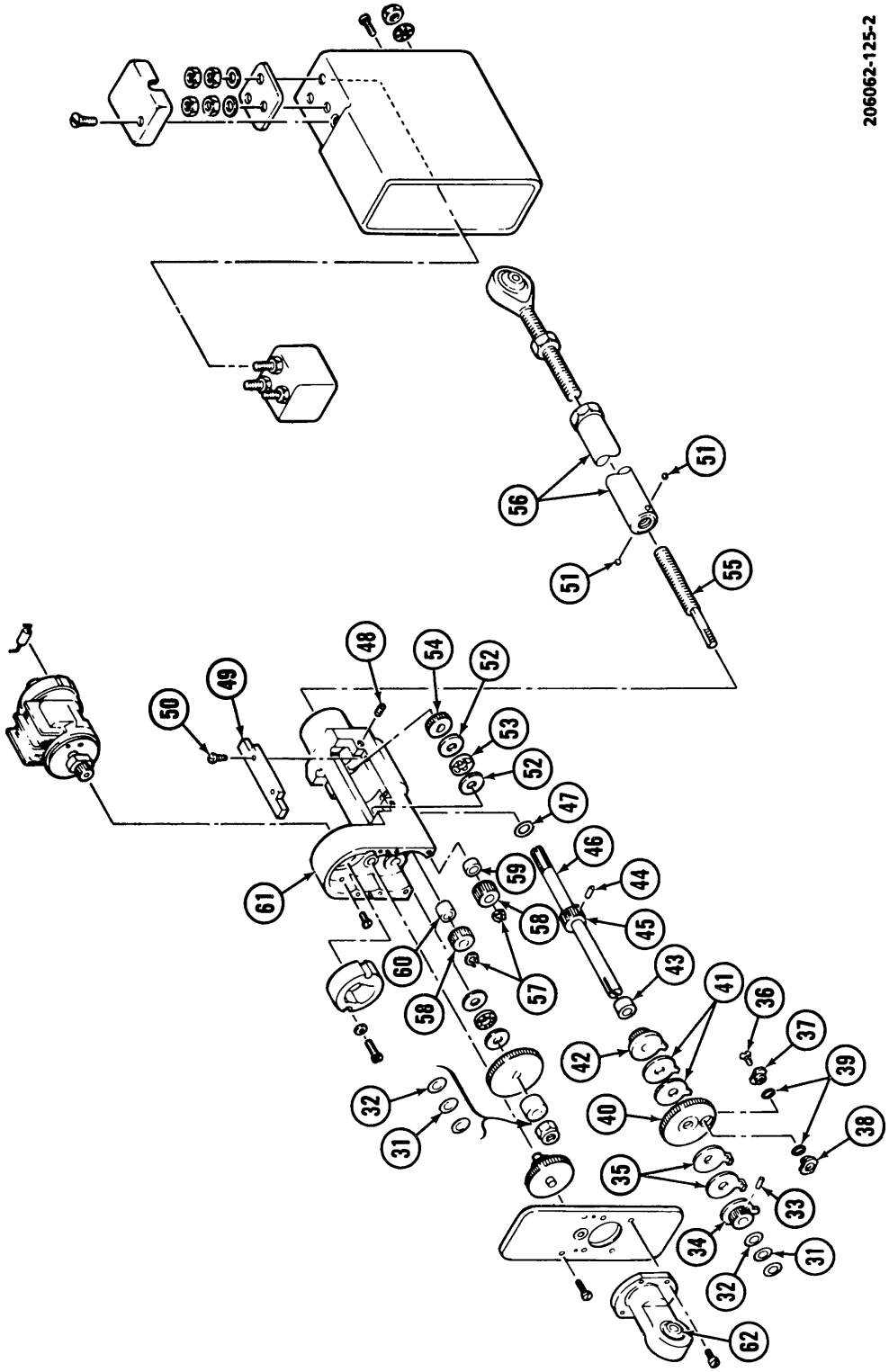

Figure 9-8. Governor Control Linear Actuator Assembly (Sheet 2 of 3)

1. Cover
2. Screw
3. Nut
4. Washer
5. Screw
6. Nut
7. Nut
8. Washer
9. Terminal Board
10. Cover and Nut Assembly
11. Filter
12. Rod End Bearing
13. Nut
14. Plate and Bearing Assembly
15. Screw
16. Mounting Plate Assembly
17. Screw
18. Gear and Shaft Assembly
19. Magnet
20. Screw
21. Washer
22. Motor
23. Screw
24. Resistor
25. Nut
26. Spacer
27. Gear
28. Thrust Washer
29. Ball Bearing
30. Shim
31. Shim
32. Shim
33. Pin
34. Plate and Gear Assembly
35. Cam Drive Washer
36. Screw
37. Drive Washer
38. Drive Washer
39. Packing
40. Gear and Bearing Assembly
41. Cam Drive Washer
42. Plate and Gear Assembly
43. Spacer
44. Pin
45. Gear
46. Shaft
47. Shim
48. Setscrew
49. Ball Retainer
50. Screw
51. Balls
52. Thrust Washer
53. Ball Bearing
54. Spurgear
55. Lead Screw Shaft
56. Output Shaft Assembly
57. Ring
58. Gear
59. Spacer
60. Spacer
61. Housing Grip
62. Bearing

Figure 9-8. Governor Control Linear Actuator Assembly (Sheet 3 of 3)

j. Remove screws (17) and mounting plate assembly (16).

k. Remove gear and shaft assembly (18).

l. Remove screws (20) and washers (21). Remove permanent magnet (19).

m. Remove screws (23) and dc motor (22). Do not disassemble motor. Resistor (24) is secured to motor with epoxy resin. Do not remove resistor unless it is found to be faulty during testing procedure after overhaul of actuator.

n. Turn nut (25) counterclockwise until output shaft assembly (56) stops in fully extended position. Remove nut (25). Remove shims (30, 31, and 32) if installed. Remove spacer (26), gear (27), thrust washers (28), and ball bearing (29). Record number and total thickness of shims for use during reassembly. Discard thrust washers (28) and ball bearing (29).

o. Remove shims (30, 31, and 32) from stop and limit shaft assembly (33 through 46). Record number and thickness of shims for use during assembly.

CAUTION

Shim (47) may be stuck to gear (45). This shim will not clear gear (58) during removal of shaft (46) and gear (45). Slide shim (47) forward during removal of shaft (46) and remove shim (47) after shaft (46) is out. Turn shaft (46) so that ends of pin (44) will not interfere with gear (58) during removal of shaft (46).

p. Push on threaded end of shaft (46) and carefully remove shaft and assembled parts (33 through 46) as a unit. Remove plate and gear assembly (34). Do not remove pin (33) unless the pin is damaged and requires replacing.

q. Remove cam drive washers (35) and gear and bearing assembly (40).

r. Remove screw (36) and drive washers (37 and 38). Discard packings (39).

s. Remove cam drive washers (41), plate and gear assembly (42), and spacer (43). Do not remove pin (44) unless gear (54) requires replacement.

t. Remove shim (47).

u. Remove setscrews (48), screws (50), and ball retainers (49). Remove and discard balls (51).

v. Remove lead screw shaft (55) and output shaft (56) as a unit. Remove and discard thrust washers (52). Remove thrust ball bearing (53) and spurgear (54). Remove lead screw shaft (55) from output shaft (56). Discard thrust ball bearing (53).

w. Remove rings (57), gears (58), and spacers (59 and 60). Discard rings (57).

9-94. INSPECTION — GOVERNOR CONTROL LINEAR ACTUATOR. (AVIM)

a. Inspect cover and nut assembly (10) visually for breaks in chemical film coating and damaged threads.

b. Inspect rod and bearing (12) visually for damaged threads. Visually inspect for cracks. If cracks are suspected inspect using fluorescent penetrant method. Inspect for wear on inside diameter. Replace bearing if worn beyond **0.1915** inch diameter.

c. Inspect plate and bearing assembly (14) visually and manually for loose bearing. Visually inspect for cracks, if cracks are suspected inspect using fluorescent penetrant method. Inspect inside diameter of bearing for wear. Replace bearing if worn beyond **0.1900** inch diameter or if bearing is loose.

d. Inspect mounting plate assembly (16) visually for scored bearing face and for breaks in chemical coating. Visually inspect for cracks in plate, if cracks are suspected inspect using fluorescent penetrant method. Inspect inside diameter for wear. Replace assembly if bearing is worn beyond **0.0955** inch diameter.

e. Inspect gears (18, 27, 40, 42, 45, 54, and 58) visually for broken and chipped teeth.

f. Inspect gear and shaft assembly (18) visually for loose shaft and scored gear face. Check shaft for wear. Replace assembly if shaft O.D. is less than **0.0936** inch. Check large gear for square mounting on shaft. Replace assembly if the inboard face of the large gear is not square with shaft within **0.005** inch true indicator reading.

g. Inspect motor (22) visually and manually for loose and defective leads on terminals. Turn rotor by hand and check for free rotation. Check rotor for spring action affecting end play. Check resistor (24) which is mounted on motor. Check drivegear for broken and chipped teeth.

h. Inspect shims (30, 31, 32, and 47) visually for sharp bend, cracks, scoring, and wear.

i. Inspect plate and gear assembly (34) visually for scoring and for burrs on inboard face of plate. Check for loose gear.

j. Inspect cam drive washers (35 and 41) visually for scratches, wear, and scoring.

k. Inspect gear and bearing assembly (40) visually and manually for the following defects:

(1) Scratches and scoring on bearing faces

(2) Loose bearing

(3) Bearing for wear on inside diameter. Replace bearing if worn beyond **0.189** inch diameter.

l. Inspect shaft (46) visually for scratches, scoring, evidence of wear, and for damaged threads. Replace shaft if worn beyond **0.1873** inch diameter.

m. Inspect ball retainers (49) visually for scratches, scoring, dents, and distortion in groove. Place ball in retainer groove and measure the width of the ball and retainer together. Replace retainer if measurement is less than **0.4230** inches.

n. Inspect spurgear (54) visually for scratches, scoring, and evidence of wear on gear faces.

o. Inspect lead screw shaft (55) visually for damaged threads.

p. Inspect output shaft assembly (56) visually for scratches and scoring on outside diameter. Inspect for damaged threads.

q. Inspect gear (58) visually for scratches and scoring on gear faces.

r. Inspect housing group (61) visually and manually for the following defects:

(1) Loose, bent, and broken pins.

(2) Loose shafts.

(3) Bearing surfaces for scratches and scoring.

(4) Housing for breaks in chemical film coating.

(5) Large bearing for wear on inside diameter. Replace bearing if worn beyond **0.4875** inch I.D.

(6) Medium bearing for wear on inside diameter. Replace if worn beyond **0.1891** inch I.D.

(7) Small bearing for wear on inside diameter. Replace bearing if worn beyond **0.0955** inch I.D.

s. Inspect filter (11) for damaged threads. Test filter for defective circuitry.

9-95. CLEANING — GOVERNOR CONTROL LINEAR ACTUATOR.

WARNING

Degreasing Solvent is combustible and toxic to eyes, skin, and respiratory tract. Wear protective gloves and goggles/face shield. Avoid repeated or prolonged contact. Use only in well-ventilated areas (or use approved respirator as determined by local safety/industrial hygiene personnel). Keep away from open flames or other sources of ignition.

a. Clean all parts except electrical components, housing (61), and plate assembly (16) with degreasing solvent (C62).

WARNING

Degreasing Solvent is combustible and toxic to eyes, skin, and respiratory tract. Wear protective gloves and goggles/face shield. Avoid repeated or prolonged contact. Use only in well-ventilated areas (or use approved respirator as determined by local safety/industrial hygiene personnel). Keep away from open flames or other sources of ignition.

b. Clean exterior surfaces of electrical components with a clean, lint-free cloth dampened with degreasing solvent (C62).

WARNING

Degreasing Solvent is combustible and toxic to eyes, skin, and respiratory tract. Wear protective gloves and goggles/face shield. Avoid repeated or prolonged contact. Use only in well-ventilated areas (or use approved respirator as determined by local safety/industrial hygiene personnel). Keep away from open flames or other sources of ignition.

c. Mounting plate assembly (16) and housing (61) have oil impregnated bearings. Clean these assemblies with a clean, lint-free cloth dampened with degreasing solvent (C62).

d. After cleaning, dry parts with dry compressed air at **20** psi maximum pressure.

e. If parts are not inspected immediately after cleaning, coat all steel parts with lubricating oil (C87). Store small parts in plastic bags. Cover all parts to prevent collection of dust.

9-96. REPAIR — GOVERNOR CONTROL LINEAR ACTUATOR. (AVIM)

a. Replace all parts which do not pass inspections outlined in steps of paragraph 9-94.

b. Replace the following parts at each overhaul:

(1) Thrust washers (29 and 52)

(2) Thrust ball bearings (29 and 53)

(3) Packings (39)

(4) Balls (51)

(5) Rings (57).

c. For repair of plate and rod end bearings refer to paragraph 9-99 and 9-103.

9-97. ASSEMBLY — GOVERNOR CONTROL LINEAR ACTUATOR. (AVIM)

a. Apply a light coat of grease (C78) to the following parts (figure 9-8):

(1) All gears.

(2) Shaft of gear and shaft assembly (18).

(3) Pack open side of ball bearings (29 and 53).

(4) Plate contact side of plate and gear assemblies (34 and 42).

(5) Cam drive washers (35 and 41). Apply grease only on side opposite dogleg cam.

(6) Shaft (46).

(7) Grooves of ball retainers (49).

(8) Balls (51).

(9) Threads of lead screw shaft (55).

(10) Threads of output shaft assembly (56).

b. Apply staking enamel (C64) to threads and heads of screws (5, 20, 23, 48, and 50, figure 9-8) just prior to installing screws. Use following procedure to apply enamel.

(1) Examine staking enamel prior to use; it should be opaque red in color. If staking enamel contains watery material, solids have separated. Do not use staking enamel if appearance indicates separation of solids. Shake container frequently to prevent material separation.

(2) Screws and mating surfaces of parts must be free of all oil, grease, dirt, and other foreign matter prior to assembly.

(3) Apply staking enamel (C64) neatly to threads and heads of screws. The amount of staking enamel used must be sufficient to completely cover the junction of the screw and mating surface and, after curing, the staking enamel must be clearly visible around the screw head.

(4) Use caution to prevent staking enamel from running into other parts whose operation would be affected. Keep staking enamel off hands and tools to prevent transmitting to other parts.

(5) After assembly, allow four hours cure time at room temperature and then cure an additional three hours at **79.5°C (175°F)**.

c. Install spacer (59 and 60) and two gears (58) on shafts of housing group (61). Secure in place with new rings (57).

d. Stand housing group (61) on its gear case end and install parts through slot in bottom of housing as follows:

(1) Insert one new thrust washer (52) through slot into recess of housing. Place new thrust ball bearing (53) on top of thrust washer and then position other new thrust washer (52) over thrust bearing. Insert spurgear (54) through housing slot and position over thrust parts.

(2) Insert lead screw shaft (55) down through housing bore and, with flats aligned, slip lead screw shaft into spurgear (54). Slide gear up on shaft slightly, then work shaft down through thrust parts and housing bore.

(3) Insert detent end of output shaft assembly (56) into housing until it engages lead screw shaft (55). Turn flattened end of lead screw shaft to thread shafts together. Run output shaft in until its two ball detents are approximately centered between setscrew (58) holes in housing group (61).

(4) Place housing on its side and turn output shaft assembly (56) so that its ball detents are perpendicular to work surface. Place a new ball (51) in detent and carefully install a ball retainer (49) with screws (50) with staking enamel as outlined in step b. Turn housing over and install other ball (51) in same manner.

(5) Position both ball retainers (49) so that outer edge of retainers are flush with side of housing. Ensure that balls (51) have not fallen out and tighten screws (50) until snug. Final tightening will be accomplished later.

(6) Install setscrews (48) with staking enamel as outlined in step b. Thread setscrews (48) in until they contact ear of ball retainers (49). Final adjustment will be made later.

e. Assemble stop and limit shaft assembly (33 through 46) as follows:

(1) If shaft (46) and gear (45) were disassembled, install gear on shaft as follows:

(a) Examine shaft (46) and note that hole for pin (44) is countersunk on one side. Pin (44) entry into shaft must be made on countersink side of shaft.

(b) Position gear (45) on shaft (46) and press new pin (44) in flush to **0.010** inch above gear O.D.

(2) If plate and gear assembly (34) and pin (33) were disassembled, press a new pin (33) into plate and gear assembly flush to **0.010** inch above gear O.D.

(3) Install spacer (43) on shaft (46).

(4) Install plate and gear assembly (42) on shaft with gear side toward spacer (43).

(5) Ensure that sixteen cam drive washers (41) have been lubricated as outlined in step a. and install the sixteen cam drive washers on shaft (46) with dogleg of washer cams pointing in direction of plate and gear assembly (42).

(6) Position new packings (39) on drive washers (37 and 38). Ensure that screw (36) and mating surfaces of drive washers (37 and 38) are clean. Apply a light coating of sealing compound (C120) on threads of screw (36). Position drive washers (37 and 38) on gear and bearing assembly (40) with flattened and concave contours of drive washers aligned. Install screw (36) through drive washer (37) and thread screw into drive washer (38). Position these assembled parts on shaft (46) so that concave contour of drive washer (37) clears adjacent cam drive washer (41).

(7) Ensure that sixteen cam drive washers (35) have been lubricated as outlined in step a and install the sixteen cam drive washers on shaft (46) with dogleg of washer cams pointing away from gear and bearing assembly (40).

(8) Position plate and gear assembly (34) on shaft (46) with gear facing away from shaft (46) and with pin (33) engaged in shaft slot.

f. Synchronize mechanical stops as follows:

(1) Rotate lead screw shaft (55) until gap between spurgear (54) and output shaft is **0.032** inch. Use a feeler gage to take measurement.

(2) Rotate gear and bearing assembly (40, figure 9-8) counterclockwise to place cam drive washers (35 and 41) and plate and gear assemblies (34 and 42) in position shown in view A-A of figure 9-9. If necessary, turn plate and gear assembly (42, figure 9-8) clockwise to complete positioning cam drive washers (41).

CAUTION

The ends of pin (44) must not interfere with teeth of gears (58) when installing the stop and limit shaft assembly (33 through 46).

g. Install stop and limit shaft assembly (33 through 46) as follows:

(1) Lay housing (61) on its side with output shaft assembly (56) to the right.

(2) Hold shim (47) over bore in housing and position stop and limit shaft assembly (33 through 46) in housing. Maintain the position of mechanical stops set in step f.

(3) Carefully mesh gears (42 and 45) with gears (58) and gear (40) with gear (54). Install washer (4) and nut (3). Engage hole in washer (4) with pin in housing.

(4) Install same shims (30, 31, and 32) that were removed at disassembly, or new shims of equal thickness, on shaft (46).

h. Install spurgear (27) as follows:

(1) Place one new thrust washer (28) in recess in housing (61).

(2) Install new thrust ball bearing (29) that has been lubricated as outlined in step a., next to thrust washer.

(3) Install new thrust washer (28) next to thrust ball bearing.

(4) Install spurgear (27) and spacer (26) on lead screw shaft (55) and secure with nut (25). Tighten nut (25) just enough to produce output shaft (56) end play of **0.001 to 0.004** inch. Take end play measurement between spacer (26) and spur gear (27). If end play tolerance cannot be obtained, remove nut (25) and add shims (30, 31, and 32) as required to obtain correct amount of end play.

i. Position motor (22) on housing (61) and secure with screws (23) which have been coated with staking enamel as outlined in step b.

j. Position magnet (19) on housing (61) and secure with washers (21) and screws (20) which have been coated with staking enamel as outlined in step b.

k. Install gear and shaft assembly (18) with teeth of gear and shaft assembly meshed with spurgear (27) and motor (22).

l. Install mounting plate assembly (16) as follows:

(1) Install mounting plate assembly (16) on housing (61) with screws (17).

(2) Check end play between gear and bearing assembly (40) and adjacent cam drive washer (35) with a feeler gage. If end play is not within **0.003 to 0.006** tolerance, remove mounting plate assembly (16) and add or remove shims (30, 31, and 32) as required to obtain correct end play. Install mounting plate (16) and recheck end play dimension to confirm that correct shims were installed.

m. Position plate and bearing assembly (14) on housing (61) and install screws (15).

n. Install rod end bearing (12) as follows:

(1) Turn gear and bearing assembly (40) to position output shaft assembly (56) in fully retracted position.

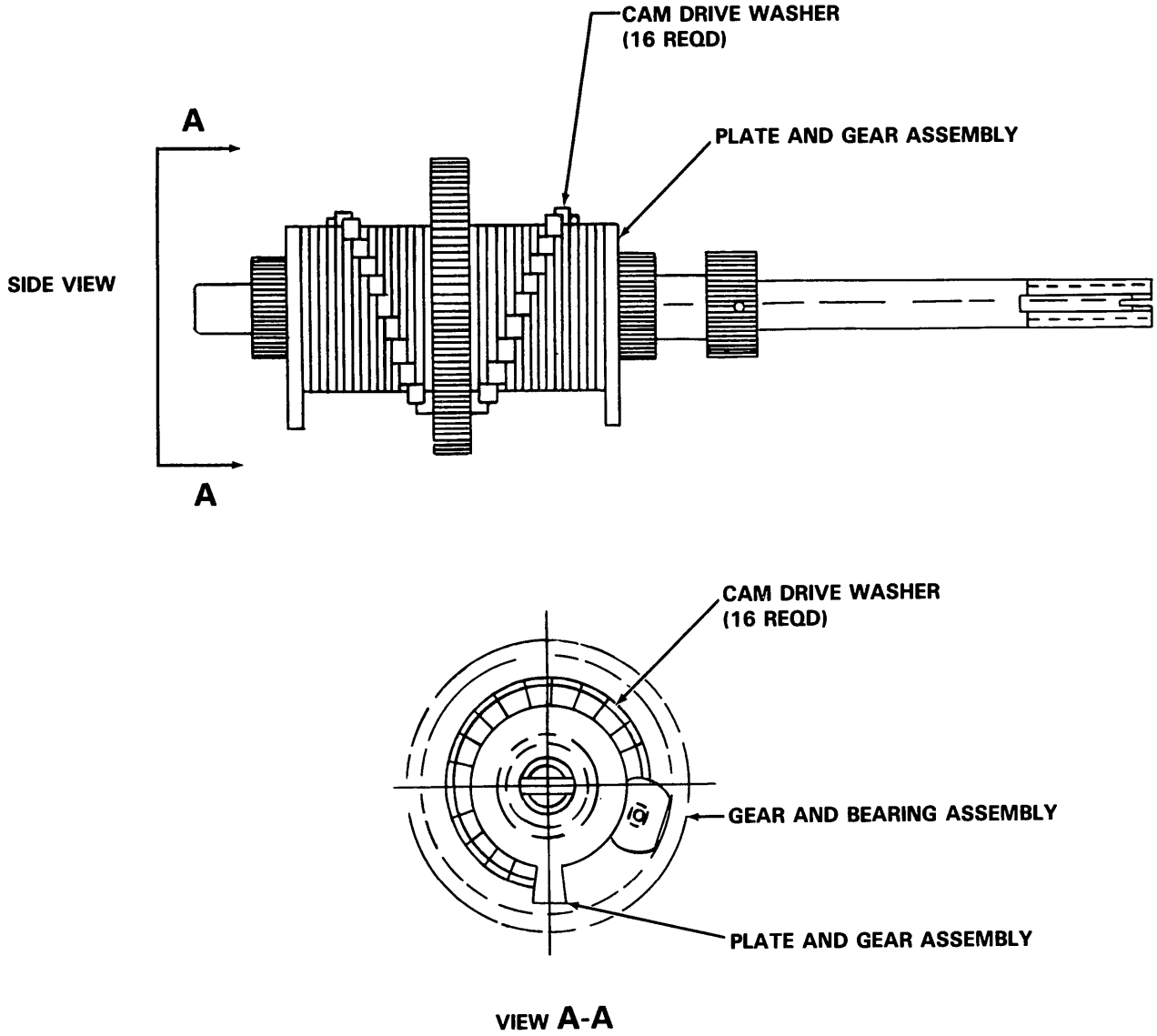

Figure 9-9. Governor Control Linear Actuator Mechanical Stop and Limit Shaft Synchronization

(2) Thread nut (13) onto rod end bearing (12).

(3) Screw rod end bearing onto output shaft assembly (56) until dimension from center of rod end bearing (12) to center of bearing in plate and bearing assembly (14) is **14.225 (±0.030)** inches.

CAUTION

Hold output shaft assembly (56) while tightening nut (13).

(4) Tighten nut (13).

o. Adjust ball retainers (49, figure 9-8) as follows:

CAUTION

Do not over-tighten screws (50) or ball retainers (49) will be damaged.

(1) Check that screws (50) are just snug and not over-tightened.

(2) Turn four setscrews (48) alternately in small increments to move ball retainers inward against and parallel to output shaft assembly (56). Adjust

setscrews so that output shaft assembly rotates from **one to six** degrees without causing lead screw shaft (55) to bind. Rotate output shaft in one direction and hold while turning gear (40) to run output shaft in and out. Check by feel to be sure there is no binding. Rotate output shaft in opposite direction and hold. Repeat check for binding.

(3) After setscrews (48) are properly adjusted in preceding step, apply a small amount of staking enamel (C64) to exposed setscrew threads and to internal threads in housing just above setscrews. Do not get staking enamel in setscrew sockets. Refer to step b. for additional information on staking enamel.

(4) Tighten screws (50).

p. Run-in and test for linear speed. Refer to paragraph 9-98, steps 9-98a. and 9-98b.

q. Remove nut (3) and washer (4).

r. Install cover and nut assembly (10) as follows:

(1) Position cover and nut assembly (10) on housing and work terminals of filter (11) up through holes in cover. Secure cover and nut assembly with screws (5) which have been coated with staking enamel as outlined in step b.

(2) Position washer (4) with one hole of washer engaged with pin on housing and install nut (3).

(3) Install terminal board (9), washer (8), and nuts (6 and 7).

s. Test linear actuator. Refer to paragraph 9-98, step 9-98d.

t. After all testing has been satisfactorily completed, apply sealing compound (C131) as follows:

(1) Apply a continuous bead approximately **1/16** inch in diameter around joint of plate and bearing assembly (14) and mounting plate assembly (16).

(2) Fill cover groove in mounting plate assembly (16).

(3) Apply a continuous bead approximately **1/16** inch in diameter around joint where housing (61) protrudes through cover and nut assembly (10). Install terminal board (9), washers (8), and nuts (6 and 7).

(4) Remove nuts (6 and 7) and terminal board (9). Apply a small continuous bead around the three terminal holes on cover and nut assembly (10). Install terminal board (9), washers (8), and nuts (6 and 7).

u. Attach terminal cover (1) with screw (2).

v. Install lockwire (C96) in screws (15 and 17) as shown in figure 9-10.

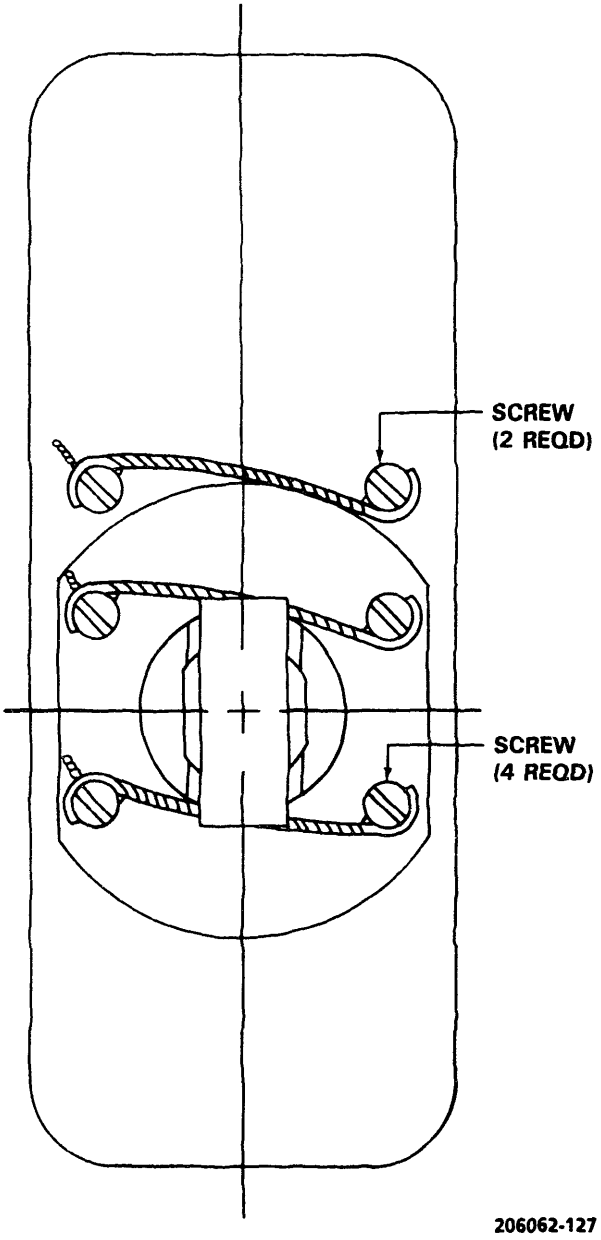

Figure 9-10. Linear Actuator Lockwire Diagram

9-98. TESTING — GOVERNOR CONTROL LINEAR ACTUATOR.

CAUTION

Handle actuator carefully. Do not lift weight of unit by the output shaft or apply any shock or loading that will tend to move housing and shaft with respect to each other in any direction other than the extend and retract motion. If any accidental loading does occur, disassemble the actuator and check for damaged ball retainer grooves.

a. Perform linear actuator run-in after overhaul as follows:

(1) Mount actuator in test fixture. Refer to figure 9-11.

(2) Connect motor leads, figure 9-12 and figure 9-13.

(3) Set up two electrical limit switches in position to be actuated by the output shaft assembly. Position the switches to permit operation of the actuator through nearly full travel, but to prevent impact against the linear actuator mechanical stops in either direction.

(4) Operate the linear actuator for **1** hour at 20 Vdc and no load.

b. Perform linear actuator linear speed test as follows:

(1) Connect an axial load of seven pounds (figure 9-11).

(2) Operate linear actuator with 28 Vdc applied and check linear speed of output shaft in both directions. The speed must be from **0.210 (±20%)** inch per second in both directions. If speed is not within limits, change resistor (24, figure 9-8). Increase resistance to decrease speed. Decrease resistance to increase speed.

(3) Remove faulty resistor (24) from motor. Solder leads of new resistor to motor but do not bond resistor to motor. Repeat linear speed test as outlined in steps (1) and (2).

WARNING

Avoid skin contact with epoxy resin sealant used to bond resistor to motor. If skin contact does occur, wash immediately with soap and water.

(4) After resistor has been checked and linear actuator speed is within limits, bond resistor to motor in position shown in figure 9-13. Use epoxy resin sealant (C128). Cure sealant for **24** hours at room temperature or cure in oven for **1** hour at **140°F (60°C).**

c. Accomplish linear actuator stroke adjustment as follows:

(1) Mount actuator in a test fixture (figures 9-11 and 9-12).

(2) Apply 28 Vdc and no load. Run actuator to full extend and record dimension between centers of bearings (figure 9-15). Run actuator to full decrease and record dimension between centers of bearings. Subtract full retract dimension from full extend dimension to determine stroke. The stroke should be **1.530 (±0.030)** inches. If stroke is not correct, accomplish steps (3) through (9).

(3) Apply 28 Vdc and no load. Run actuator to midpoint of stroke.

(4) Loosen nut (3, figure 9-8) and lift washer (4) off pin.

(5) Turn adjustment shaft clockwise to increase stroke. Turn adjustment shaft counterclockwise to decrease stroke. One full turn changes stroke approximately **0.250** inch.

(6) If adjustments are reversed, remove washer and run unit through full extend and retract strokes. Replace washer and nut. Repeat steps (3) through (5).

(7) Position washer (4, figure 9-8) over pin in housing and tighten nut (3).

(8) Repeat step (2) to confirm that stroke is correct and that actuator operates smoothly.

(9) Leave actuator in test fixture for accomplishment of final test.

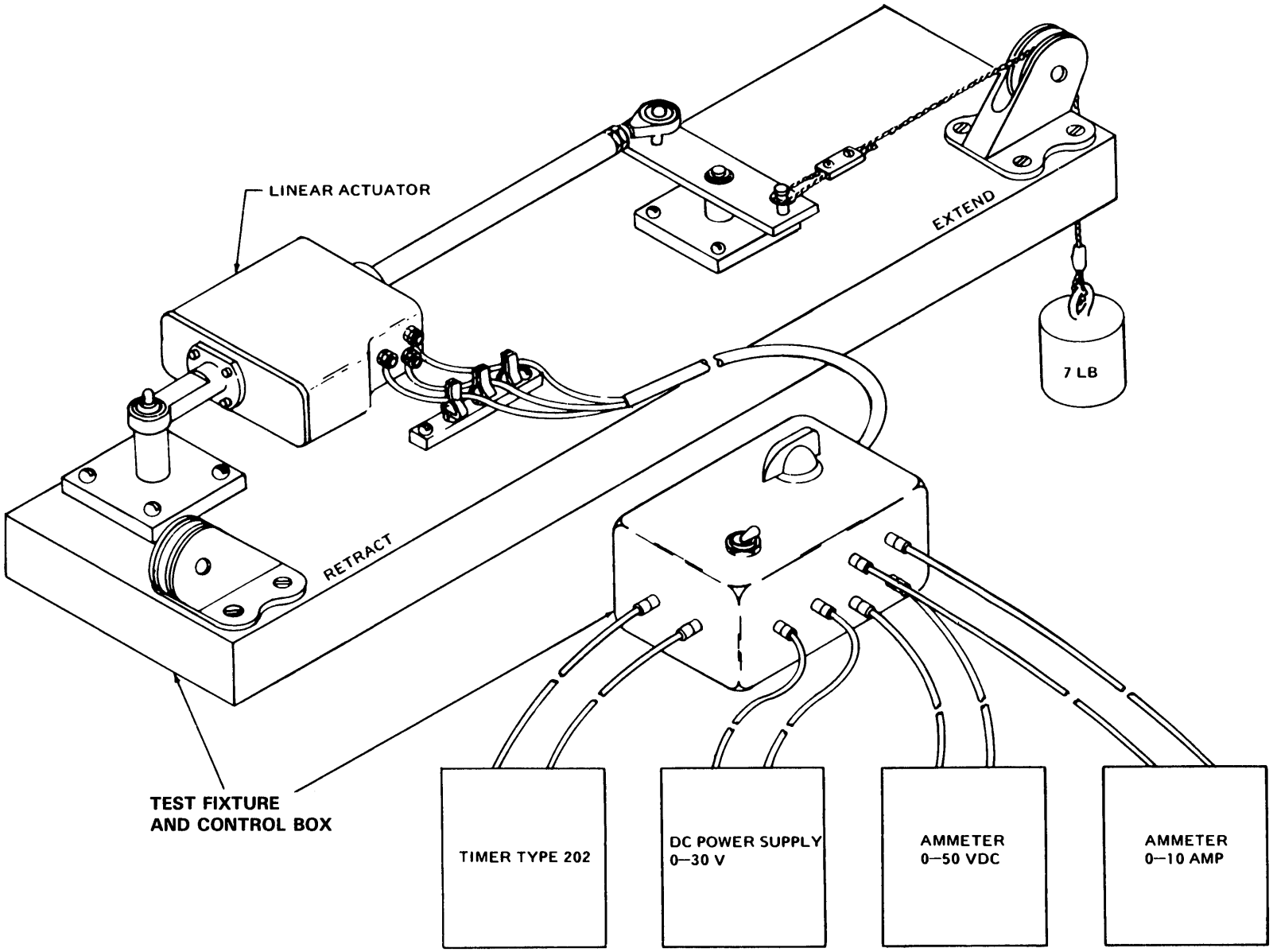

Figure 9-11. Linear Actuator Work Aid

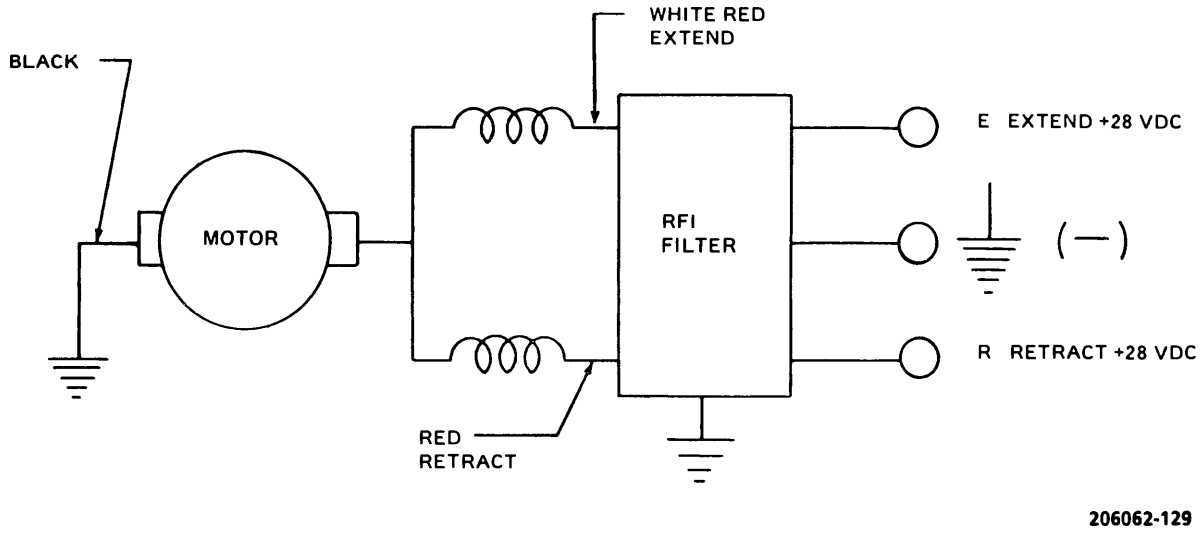

Figure 9-12. Linear Actuator Wiring Schematic

d. Perform linear actuator final test as follows:

(1) Mount actuator in a test fixture if not previously accomplished. Refer to figures 9-11 and 9-12.

(2) Apply 28 Vdc and run actuator to full retract position.

(3) Attach a **seven** pound weight in the position shown in figure 9-11 to check actuator extension.

(4) Set the test fixture timer to **zero** and apply 28 Vdc. Measure the time of travel to **1.530** inches extension. The time must be from **6.070 to 9.110** seconds. Current must not exceed **2.0** amperes.

(5) Run actuator to full extend position.

(6) Change the **seven** pound weight to the pulley marked retract (figure 9-11).

(7) Set the test fixture timer to **zero** and apply 28 Vdc. Measure the time of travel to **1.530** inches retract. The time must be **6.070 to 9.110** seconds. Current must not exceed **2.0** amperes.

(8) Remove seven pound weight and attach a **0 to 30** pound spring scale to the pivot arm with the scale toward the extend pulley. Apply 28 Vdc to actuator and measure value on scale where actuator motor stalls. The scale value must exceed **15** pounds when the motor stalls and the current must not exceed **5.0** amperes.

(9) Repeat test described in step (8) but with the spring scale toward the retract pulley. The stall limits for weight and current are the same as those called out in step (8).

(10) After the requirements of the final test are satisfactorily met, remove the actuator from test fixture and complete assembly of actuator. Refer to paragraph 9-97 step 9-97t.

e. Test linear actuator resistor as follows:

(1) Unsolder one end of resistor (24, figure 9-8) from its motor terminal.

(2) Check resistor (24) for an open circuit and for a short circuit with a multimeter. Replace resistor if faulty.

(3) Solder (C133) resistor to motor at point where removed in step (1).

f. Test linear actuator filter (figure 9-14) as follows:

(1) Check resistance between terminals 1 and 6 and between terminals 2 and 5 with a multimeter. Replace filter if resistance exceeds **0.100** ohms.

(2) Set multimeter on high ohms scale and check resistance between terminals 1 and 3 and between terminals 2 and 3. The needle on the multimeter should deflect slightly. If it does not, reverse leads and test again. If multimeter needle still

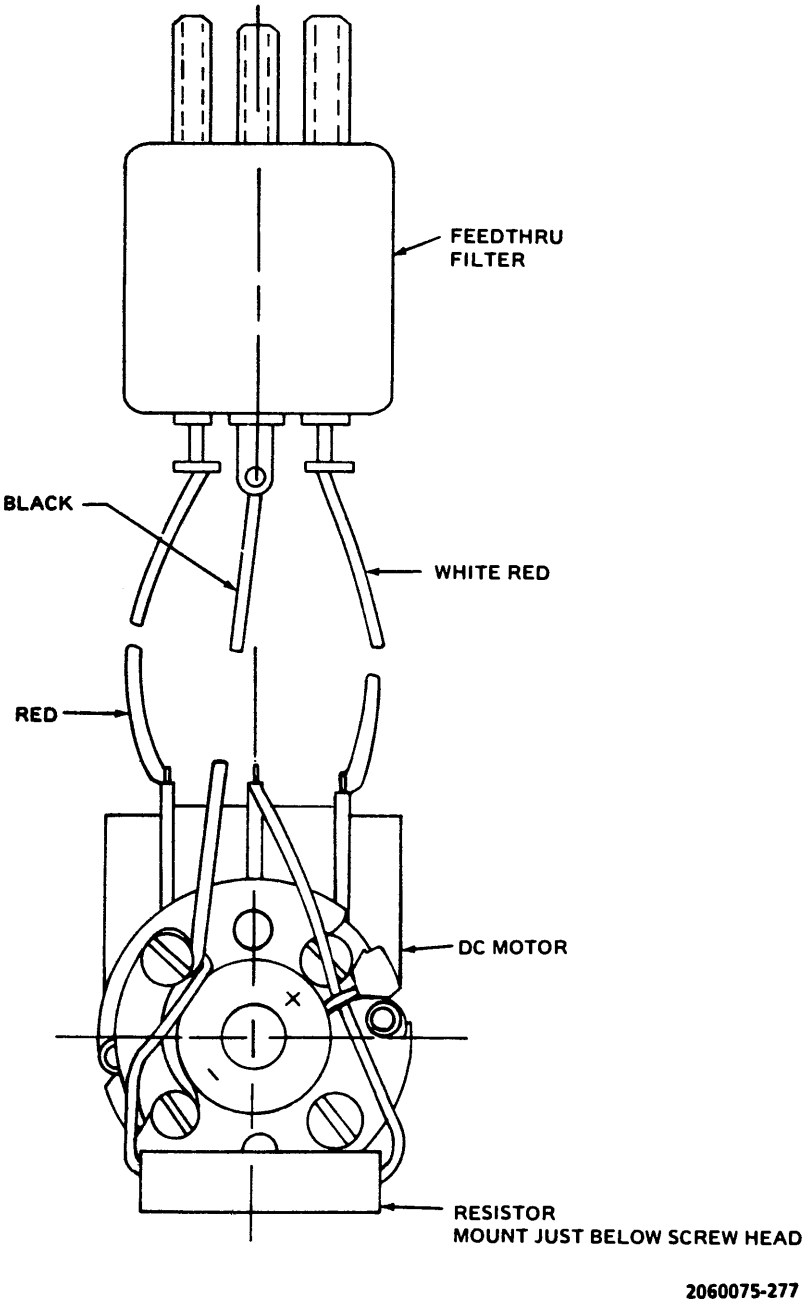

Figure 9-13. Linear Actuator External Wiring

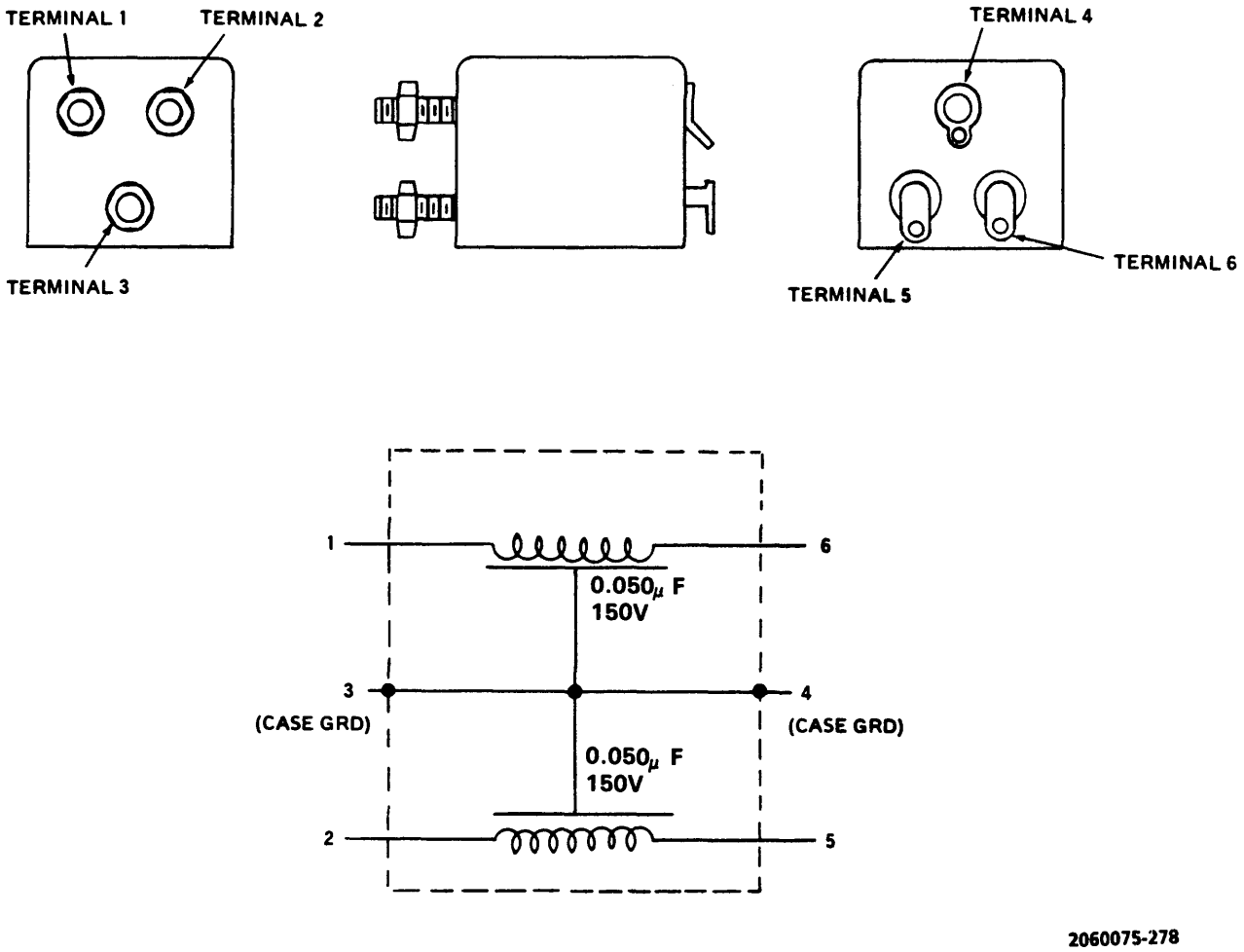

Figure 9-14. Linear Actuator Filter Terminal Identification and Schematic

does not deflect, the filter has an open circuit and must be replaced.

(3) If zero resistance is measured in step (2) the filter has a short circuit and must be replaced.

g. Test linear actuator motor as follows:

(1) Check end play of motor shaft. Apply a force of **12 to 14** pounds axially to gear end of motor shaft and check distance that shaft is displaced from its normal free position. The shaft should move **0.008 to 0.018** inch from its normal position.

(2) If end play is not within limits, replace the motor.

9-99. MOUNTING PLATE BEARING — LINEAR ACTUATOR.

9-100. REMOVAL — MOUNTING PLATE BEARING.

a. Remove lockwire and remove four screws (1, figure 9-15).

b. Remove mounting plate and bearing assembly (2).

9-101. REPAIR OR REPLACEMENT — MOUNTING PLATE BEARING.

a. Press bearing (7, figure 9-15) from mounting plate (2).

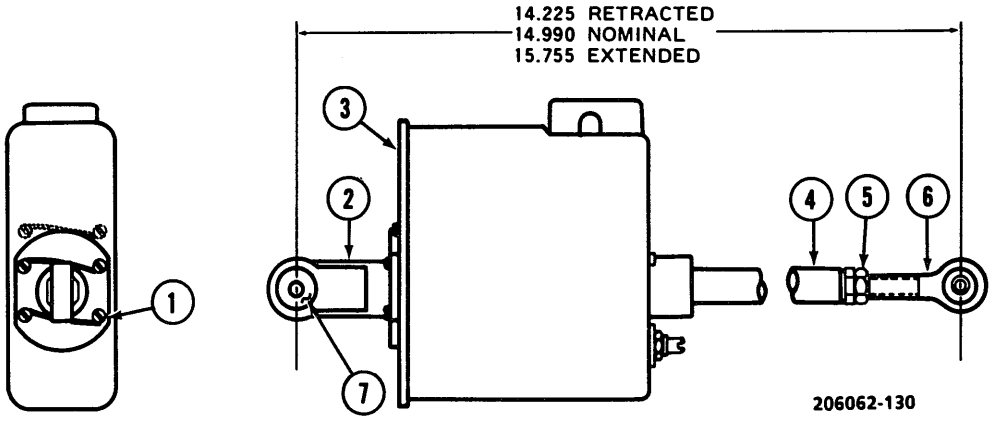

1. Screw
2. Mounting Plate, Bearing
3. Mounting Plate, Housing
4. Output Shaft
5. Jamnut
6. Rod End Bearing Assembly
7. Bearing

Figure 9-15. Linear Actuator

b. Press new bearing (7) into mounting plate (2) and segment stake mounting plate at four equally spaced locations on each side.

9-102. INSTALLATION — MOUNTING PLATE BEARING.

a. Install bearing mounting plate (2, figure 9-15) with four screws (1).

b. Lockwire (C96) screws (1) in pairs.

c. Apply a 1/16 inch diameter bead of sealing compound (C131) around joint between bearing mounting plate (2) and housing mounting plate (3).

9-103. ROD END BEARING — LINEAR ACTUATOR.

9-104. REMOVAL — ROD END BEARING.

CAUTION

Hold output shaft (4, figure 9-15) with a wrench, to prevent transmitting torque to linear actuator, when removing or installing rod end bearing assembly (6).

a. Loosen jamnut (5) and turn rod end bearing assembly (6) from output shaft (4).

b. Remove jamnut (5) from rod end bearing assembly (6).

9-105. INSTALLATION — ROD END BEARING.

a. Install jamnut (5) on rod end bearing assembly (6).

b. Install rod end bearing assembly (6) into output shaft (4). Do not tighten jamnut (5).

c. With linear actuator fully extended, adjust for a maximum **15.755 (±0.030)** inches length, measured between center lines of rod end holes.

d. Hold output shaft (4) with a wrench and tighten jamnut (5).

9-106. HYDRAULIC CONTROL SYSTEM.

9-107. DESCRIPTION — HYDRAULIC CONTROL SYSTEM. The electrical circuitry for control of the hydraulic system consists of a hydraulic bypass solenoid valve (L1), and a HYD BOOST switch (S7), and is protected

by a **5** ampere HYD BOOST circuit breaker. The valve is normally energized to prevent hydraulic fluid flow and may be de-energized to permit fluid flow by setting switch (S7) to ON position. Refer to figures 9-1 and F-11.

9-108. TESTING — HYDRAULIC CONTROL SYSTEM.

a. Place hydraulic boost switch to HYD BOOST. Ensure that HYD BOOST SOL and CAUTION PNL LTS circuit breakers are closed. Apply hydraulic pressure to helicopter from external source. Check that the HYD PRESS caution light is extinguished and that cyclic and collective controls move easily.

b. Place hydraulic boost switch to OFF. Check that HYD PRESS caution light is illuminated and that cyclic and collective controls are harder to move than in step a.

c. Return hydraulic boost switch to HYD BOOST. Check that HYD PRESS caution light is extinguished and that the cyclic and collective controls move easily.

9-109. TROUBLESHOOTING — HYDRAULIC CONTROL SYSTEM. Refer to table 9-5 for troubleshooting of the hydraulic control system.

NOTE

Before using table 9-5, ensure all normal operational checks have been performed. If a malfunction exists which is not listed in table 9-5, notify the next higher level of maintenance.

Table 9-5. Troubleshooting — Hydraulic Control System

CONDITION TEST OR INSPECTION	CORRECTIVE ACTION
1. Hydraulic pressure continues and solenoid fails to operate after actuation of HYD BOOST toggle switch to OFF.	
STEP 1. Check for defective or open circuit breaker.	**Replace faulty circuit breaker.**
STEP 2. Inspect switch contacts for corrosion, loose connections, burned terminals, etc.	**Replace toggle switch.**
STEP 3. Check wiring and solenoid for defects.	**Repair or replace wiring and replace defective solenoid.**
2. Circuit breaker opens.	
STEP 1. Check for shorted wiring and/or solenoid.	**Repair or replace defective wiring and/or solenoid.**

9-110. HYDRAULIC BYPASS SOLENOID.

9-111. DESCRIPTION — HYDRAULIC BYPASS SOLENOID. The hydraulic bypass solenoid (L1) located on the service deck forward of the transmission is controlled by the HYD BOOST switch (figure 9-1). With the switch in OFF position, the solenoid is energized, allowing the boost system to be bypassed.

9-112. INSPECTION — HYDRAULIC BYPASS SOLENOID. Refer to paragraph 7-22.

9-113. REMOVAL — HYDRAULIC BYPASS SOLENOID. Refer to paragraph 7-23.

9-114. INSTALLATION — HYDRAULIC BYPASS SOLENOID. Refer to paragraph 7-24.

9-115. FORCE TRIM SYSTEM.

9-116. DESCRIPTION — FORCE TRIM SYSTEM. The force trim system consists of a fore and aft force trim magnetic brake (L4), and a lateral force trim magnetic brake (L5). The magnetic brakes are wired in parallel and are protected by a 5 ampere FORCE TRIM circuit breaker, FORCE TRIM switches (S60), (S58), and (S59) are all series wired. The entire system serves to return pilot and copilot cyclic to desired initial position when switch (S60) is set to ON position. Switch (S58 or S59) may be triggered to de-energize brakes and eliminate centering force. With switch (S60) set to OFF position, automatic trim force is de-energized Refer to figures 9-1 and F-11.

9-117. TESTING — FORCE TRIM SYSTEM.

a. Ensure that FORCE TRIM circuit breaker is closed. Place force trim switch to FORCE TRIM. Check that the cyclic controls have a holding force in fore and aft and lateral directions.

b. Press force trim switch on pilot cyclic stick. Check that holding forces noted in step a. are not present.

c. Release force trim switch on pilot cyclic stick. Check that holding forces noted in step a. are present.

d. Repeat steps b. and c. except use force trim switch on copilot cyclic switch.

e. Place force trim switch to OFF. Check that holding forces are not present.

9-118. TROUBLESHOOTING — FORCE TRIM SYSTEM. Refer to table 9-6 for force trim system troubleshooting procedures.

NOTE

Before using table 9-6, ensure all normal operational checks have been performed. If a malfunction exists which is not listed in table 9-6, refer to the next higher level of maintenance.

Table 9-6. Troubleshooting — Force Trim System

CONDITION TEST OR INSPECTION	CORRECTIVE ACTION
1. Magnetic brakes fail to energize with FORCE TRIM switch (S60) ON.	
STEP 1. Check for defective switch. Shorted wiring, or loose connections.	**Replace defective switch and/or repair or replace wiring.**
STEP 2. Check for defective magnetic brake.	**Replace defective brake.**
2. Magnetic brakes fail to de-energize when switch (S58 or S59) is depressed.	**Check for defective switch or shorted wiring. Replace defective switch or repair wiring.**

9-119. PRIMARY DIRECTIONAL CONTROL VULNERABILITY REDUCTION SYSTEM (ELECTRICAL). C .

9-120. DESCRIPTION — PRIMARY DIRECTIONAL CONTROL VULNERABILITY REDUCTION SYSTEM (ELECTRICAL).

NOTE

The information contained in this paragraph applies to those helicopters with incorporation of MWO 55-1520-228-50-18 (vulnerability reduction flight control system) only.

The vulnerability reduction system is a backup system for the primary directional control system. Electrically it consists of a forward electromechanical control disconnect located on the forward primary directional control tube near the foot pedals, an aft electromechanical control disconnect located on the aft primary control tube in aft end of tailboom, control relay, time delay relay, and PRI DIR CONTR switch located on pilot collective stick. The PRI DIR CONTR panel consists of a JAM indicator light and a DISENG light. System power is provided from the 28 Vdc essential bus through a 5 ampere PRI DIR CONTR circuit breaker.
Mechanically the system consists of a forward control assembly, an idler, an aft control assembly and a number of support and brackets. A shear link terminal is incorporated in the forward terminal of the forward control assembly and the aft terminal of the aft control assembly. These shear link terminals are provided to release at a preset force (73 pounds force at the pilots foot) if a jam occurs in the vulnerability reduction flight control system. When the shear link terminal releases, the terminal components will extend or retract freely to allow full travel in the primary system. Refer to paragraph 11-93 for further description of mechanical functions.

9-121. TEST — PRIMARY DIRECTIONAL CONTROL VULNERABILITY REDUCTION SYSTEM (ELECTRICAL).

a. Close PRI DIR CONTR circuit breaker. Position PRI DIR CONTR DISENG switch (S130) on pilot collective stick to ENGAGE. Check that PRI DIR CONTR JAM and DISENG lights near lower right corner of instrument panel are extinguished.

b. Depress PRESS TO TEST feature on the PRI DIR CONTR JAM and DISENG lights to check that each light will illuminate.

c. Position PRI DIR CONTR DISENG switch (S130) to DISENG. Check that the PRI DIR CONTR DISENG light illuminates, and the JAM light remains extinguished.

d. With switch (S130) positioned to DISENG, clamp the pedals in neutral position (refer to figure 11-17, view A). With the pedals immobile, move the yaw control tube in either direction to cause the control tube to move within the electromechanical control disconnect units.

NOTE

A small amount of force will be required to move the control tube.

e. Position PRI DIR CONTR DISENG switch (S130) to ENGAGE. Check that JAM light illuminates, and DISENG light remains illuminated.

f. Return control tube to neutral position, reset ENGAGE — DISENG switch and check that the DISENG and JAM lights extinguish.

g. Remove clamp from pedals.

9-122. INSPECTION — PRIMARY DIRECTION CONTROL VULNERABILITY REDUCTION SYSTEM (ELECTRICAL).

a. Inspect switches for weak detents, security, corrosion, and faulty operation.

b. Inspect plugs and connectors for security, contact corrosion, damaged contacts, broken wires, and faulty insulation.

c. Inspect relays for loose connections, damage to case, and evidence of corrosion, pits or discoloration.

d. Inspect panel lights for faulty bulbs, security, and corrosion.

9-123. TROUBLESHOOTING — PRIMARY DIRECTIONAL CONTROL VULNERABILITY REDUCTION SYSTEM (ELECTRICAL). Refer to figure F-30 and table 9-7.

NOTE

Before using table 9-7, ensure all normal operational checks have been performed. If a malfunction exists which is not listed in table 9-7, refer to the next higher level of maintenance.

Table 9-7. Troubleshooting — Primary Directional Control Vulnerability Reduction System (Electrical) C

CONDITION

TEST OR INSPECTION

CORRECTIVE ACTION

1. Control relay fails to activate when PRI DIR CONTR DISENG switch (S130) positioned to ENGAGE.

STEP 1. Check circuit breaker.

Engage breaker if open or replace defective breaker.

STEP 2. Check for 28 Vdc at X1 of control relay.

If voltage present replace defective control relay.

STEP 3. Check wiring for shorts or loose connections.

Repair or replace wiring. Tighten loose connections.

2. Forward or aft or both electromechanical control disconnects fail to actuate when PRI DIR CONTR DISENG switch (S130) positioned to DISENG.

STEP 1. Check circuit breakers.

Engage breaker if open or replace defective breaker.

STEP 2. Check for 28 Vdc at pin 1 at PRI DIR CONTR DISENG switch (S130).

If voltage not present replace switch.

STEP 3. Check wiring for shorts or loose connections.

Repair or replace wiring. Tighten loose connections.

STEP 4. Check for 28 Vdc at pin A of forward or aft electromechanical control disconnects.

If voltage present replace one or both electromechanical control disconnects as necessary.

STEP 5. Check wiring for shorts or loose connections.

Repair or replace wiring. Tighten loose connections.

3. Time delay relay will not actuate while test (paragraph 9-121

STEP 1. Check for 28 Vdc at pin K at time delay relay.

If voltage present replace relay.

STEP 2. Check wiring for shorts or loose connections.

Repair or replace wiring. Tighten loose connections.

9-124. MAGNETIC BRAKES (L4, L5).

Refer to paragraph 11-69 for all information relevant to the magnetic brakes.

9-125. SWITCH BOX ASSEMBLY — COLLECTIVE CONTROL STICK.

9-126. DESCRIPTION — SWITCH BOX ASSEMBLY — COLLECTIVE CONTROL STICK. Switch box on top of pilots collective contains control switches for engine starter, governor rpm, landing lights, and idle stop release.

9-127. DISASSEMBLY — SWITCH BOX ASSEMBLY — COLLECTIVE CONTROL STICK.

a. Disconnect all electrical power from helicopter.

b. Remove locknuts from GOV RPM, LDG LTS, and STARTER switches.

c. Remove three screws (2, figure 9-16) from top of switch box assembly and remove cover (3).

9-128. INSPECTION — SWITCH BOX ASSEMBLY — COLLECTIVE CONTROL STICK. Inspect for frayed or broken wires and stripped or damaged threads on switches in switch box.

9-129. REPAIR — SWITCH BOX ASSEMBLY — COLLECTIVE CONTROL STICK.

a. Repair all frayed or broken wires.

b. Replace any defective switch.

9-130. ASSEMBLY — SWITCH BOX ASSEMBLY — COLLECTIVE CONTROL STICK.

a. Align switches with corresponding holes in switch box cover and install locknuts.

b. Position cover onto box and secure with three attaching screws.

9-131. CYCLIC STICK GRIP ASSEMBLY.

9-132. DESCRIPTION — CYCLIC STICK GRIP ASSEMBLY. This paragraph contains the maintenance

1. Locknuts (3)
2. Screws (3)
3. Cover

Figure 9-16. Switch Box Assembly A

and test instructions for cyclic stick grip assembly (figure 9-17). Maintenance of the grip assembly should be performed under conditions as clean as possible; however, the absence of moving parts, other than the switch assemblies, makes unusual precautions unnecessary. Cover the work bench with a rubber cushion or other cushioning material to prevent damage to the grip and switches in disassembly. Maintenance of the grip assembly consists of removing and replacing switch assemblies that are not functioning properly, with the exception of the RADIO/ICS switch assembly. One or both of the component microswitches can be replaced to render the switch assembly serviceable. Complete assembly and disassembly instructions are given in the following paragraph, but the grip should be disassembled only as necessary to perform the required maintenance. Test procedures of paragraph 9-146 and figure 9-18 will be helpful in locating defective switches that require removal and replacement.

9-133. INSPECTION — CYCLIC STICK GRIP ASSEMBLY. Refer to paragraph 11-43.

9-134. REMOVAL — CYCLIC STICK GRIP ASSEMBLY. Refer to paragraph 11-44.

9-135. DISASSEMBLY — CYCLIC STICK GRIP ASSEMBLY.

NOTE

Before disassembling the grip, test all switches and wiring according to step g. below to determine what replacements will be necessary. Do not unsolder leads from any switches that do not require replacement.

a. Remove the six pan head machine screws (2, figure 9-17) and carefully lift off the grip cap (1).

b. If only the toggle switch (6) is to be replaced and not the complete assembly (5, 6, 7), carefully press out the pin (5) to separate the button (7) from the toggle switch (6).

c. Remove the two panhead screws (18) from the underside of the grip subassembly (13) to release the RADIO-ICS switch (19). Slide the RADIO-ICS out of the grip assembly (13); then carefully unsolder the lead wires to remove the defective microswitch or switches.

d. Remove the truss head screw (17) that secures the pushbutton switch (16) to the grip subassembly (13). Lift out the pushbutton switch, or if necessary, push it out from the underside with a blunt instrument.

CAUTION

Use care not to damage wire insulation.

e. Unscrew the trigger pin (12) and slowly withdraw it while holding the trigger guard (9) and trigger switch (11) in place. Then pull out the trigger guard and trigger switch, separating the guard from the switch with care so as not to distort or loosen the return spring (10). Carefully unsolder the lead wires to remove the switch.

f. Unscrew the handle retaining screw (15) and remove it from the grip subassembly (13) along with the lockwasher (14).

g. The lead wires passing through the grip subassembly (13) to the various switches are tied securely with a 12-inch length of tying cord and covered with a 2-inch insulating sleeve. There are individual insulating sleeves where the leadwires are soldered to the various switches. Do not remove the twine and 2-inch sleeve unless tests indicate that replacement of leadwires is required.

9-136. INSPECTION — CYCLIC STICK GRIP ASSEMBLY. Inspect those parts that have become accessible through disassembly for damage, wear, or deterioration of any kind. Replace all damaged parts as well as parts that do not function properly. Check security and continuity of soldered connections to all switches and the condition of leadwire insulation. Be sure that all switches are checked for proper actuation and continuity before reinstallation.

WARNING

Degreasing Solvent is combustible and toxic to eyes, skin, and respiratory tract. Wear protective gloves and goggles/face shield. Avoid repeated or prolonged contact. Use only in well-ventilated areas (or use approved respirator as determined by local safety/industrial hygiene personnel). Keep away from open flames or other sources of ignition.

9-137. CLEANING — CYCLIC STICK GRIP ASSEMBLY. Clean all parts exposed in disassembly by using clean, dry, compressed air at approximately **15** psi. New parts should be clean prior to reassembly. Any hard to remove dirt or grease may be cleaned with degreasing solvent (C62) applied sparingly with a clean cloth.

9-138. REPAIR OR REPLACEMENT — CYCLIC STICK GRIP ASSEMBLY. All defective parts should be replaced. With the exception of the RADIO-ICS

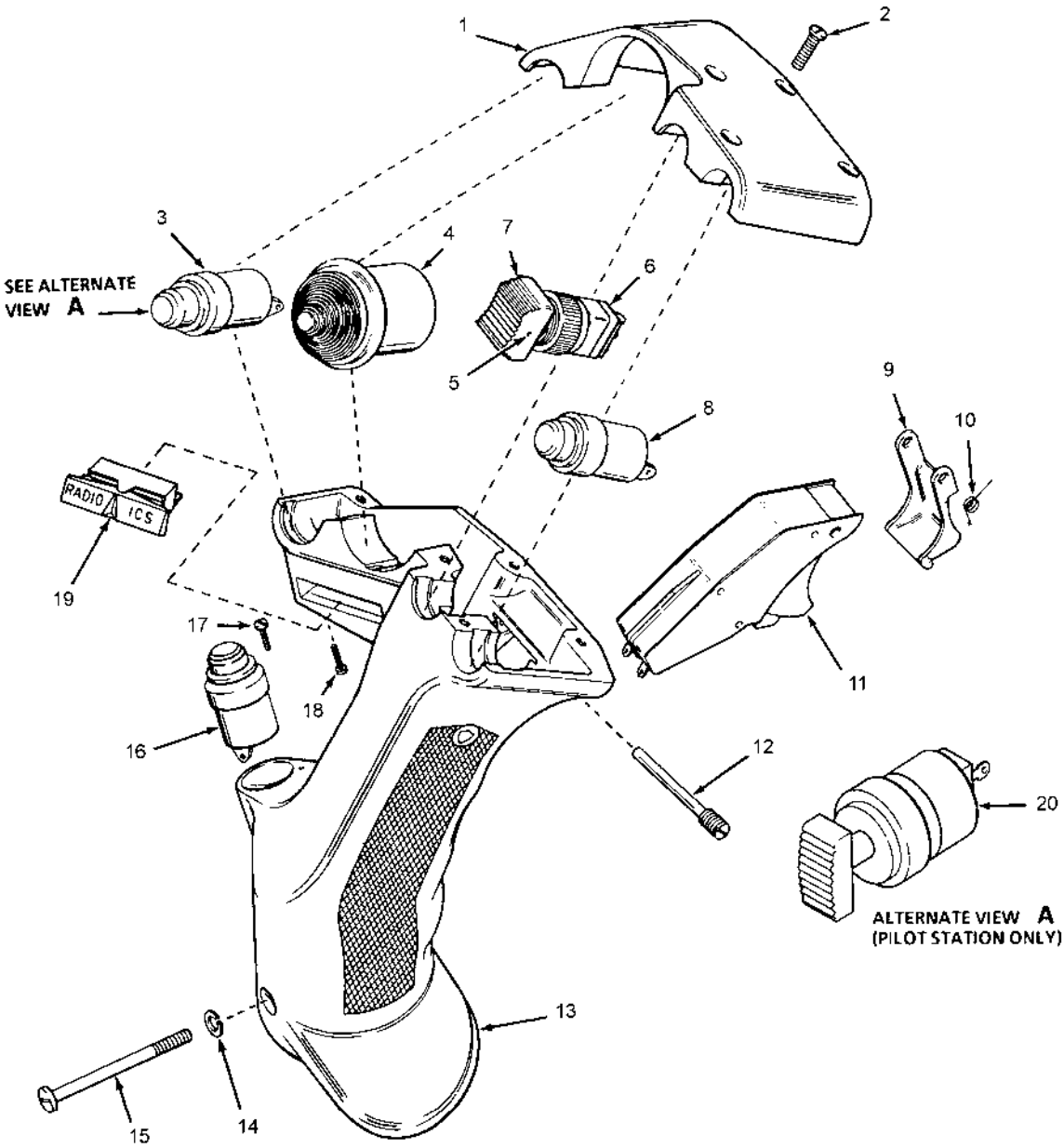

1. Grip Cap
2. Screw
3. Push Button Switch A
4. Four-way Switch
5. Pin
6. Toggle Switch
7. Button
8. Push Button Switch
9. Trigger Guard
10. Return Spring
11. Trigger Switch
12. Trigger Pin
13. Grip Subassembly
14. Lockwasher
15. Screw
16. Push Button Switch
17. Truss Head Screw
18. Pan Head Screw
19. Radio - ICS Switch
20. Night Vision Goggles (NVG) Switch C

NOTE

Refer to Figure 11-5 for function identification.

MS038434

Figure 9-17. Disassembly — Cyclic Stick Grip Assembly (Typical)

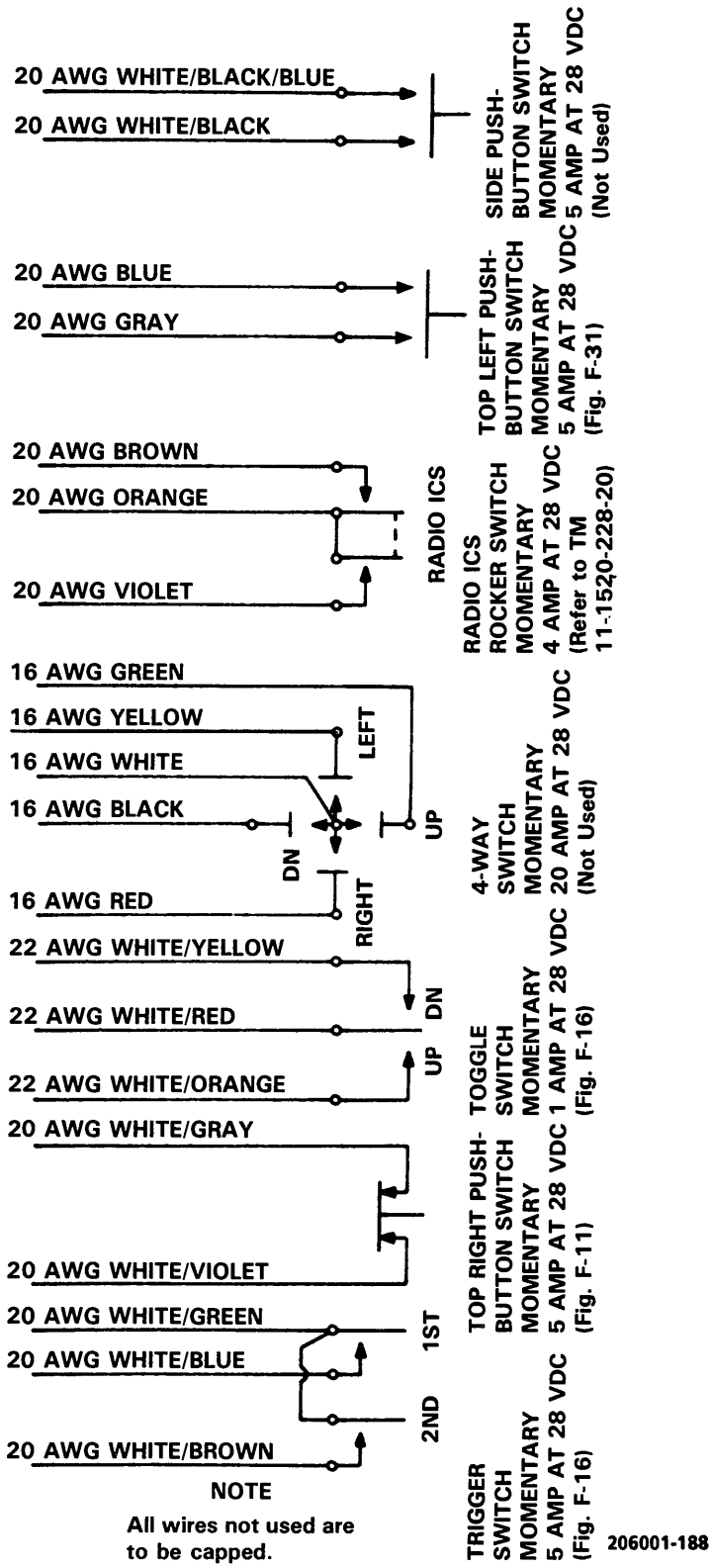

Figure 9-18. Cyclic Stick Grip Assembly Internal Wiring Schematic A

switch, all switch assemblies must be replaced as assemblies and soldered to the proper lead wires unless complete assemblies with lead wires attached are available. All lead wires replaced must be **63** inches long, except those to the side button switch, which must be **58** inches long and of the size and color specified on the internal wires schematic, figure 9-18.

9-139. REASSEMBLY — CYCLIC STICK GRIP ASSEMBLY.

CAUTION

In soldering, use extreme care not to damage wire insulation and ensure that a 3/4-inch piece of insulation sleeving is slipped over the soldered connection.

a. Using solder (C133), carefully resolder lead wires, removed from each defective switch, to the new switch installed. Refer to the internal wiring schematic figure 9-18.

b. In replacing the trigger switch (11, figure 9-17) and guard (9), be sure that the return spring (10) is clipped into the guard (9) and is so placed that the trigger pin (12) may be inserted through it before it enters the holes in the guard and switch.

c. The four-way switch (4) has a small projection or key on the bottom side which must be inserted carefully into matching keyway in the grip subassembly (13).

d. Use care in inserting the toggle switch (5, 6, and 7); see that the button is positioned vertically in line with the grip.

Deleted

e. Be sure that side pushbutton switch (16) and top left pushbutton switch (3) are the normally open type, and that the top right pushbutton switch (8) is the normally closed type A .

f. Be sure that side pushbutton switch (16) is the normally open type, and that the top right pushbutton switch (8) is the normally closed type C .

NOTE

Pushbutton switch (3) has been replaced by the night vision goggle (NVG) switch (S20) on the OH-58C pilot cyclic stick C .

g. Be sure that the grip cap (1) fits down snugly over all switches and all switches are seated precisely in the grooves provided for them in the grip subassembly before the cap is attached. Coat machine screws (2) with varnish (C153) just before inserting.

9-140. CYCLIC BUTTON SWITCH (S58 AND S59).

9-141. DESCRIPTION — CYCLIC BUTTON SWITCH (S58 AND S59). The cyclic button switch is a single-pole, single-throw, press contact switch furnished as part of the cyclic stick grip assembly and enables pilot or copilot to de-energize force trim system.

9-142. INSPECTION — CYCLIC BUTTON SWITCH (S58 AND S59). Inspect switch for condition, faulty contacts, security, and discoloration.

9-143. REMOVAL — CYCLIC BUTTON SWITCH (S58 AND S59).

a. Set BAT switch to OFF.

b. Unscrew and remove two attaching screws from grip cap.

c. Remove cap, release and lift switch sufficiently to gain access to switch wires.

d. Disconnect wires from switch, identify and tape wire ends.

NOTE

Utilize caution in switch removal and installation to prevent chafing or damage to wires.

9-144. REPAIR OR REPLACEMENT — CYCLIC BUTTON SWITCH (S58 AND S59). Replace switch, failing inspection requirements.

9-145. INSTALLATION — CYCLIC BUTTON SWITCH (S58 AND S59).

a. Remove tape and attach wires to switch.

b. Carefully position switch in grip assembly, observing that wires are free of obstructions.

c. Place cap on grip assembly and install two attachment screws.

9-146. TESTING — CYCLIC STICK GRIP ASSEMBLY. No special equipment is required for testing the grip assembly, but a multimeter or continuity tester and a 1000 volt, 60 Hz voltage source must be available. Make the following tests on the reassembled grip prior to installation on the helicopter. Refer to internal wiring schematic (figure 9-18) for wiring continuity to the various switches to be tested A . Refer to figure 9-19 C .

a. Check the four-way switch (4, figure 9-17) for continuity in all positions with a 20-amp inductive load at 28 Vdc.

b. Check the pushbutton switch (8) for operation and continuity in both normal and depressed positions with a 5-amp inductive load at 28 Vdc. Make certain that the top left switch and the side switch are normally open, and that the top right switch is normally closed.

c. Check the toggle switch for proper operation with a 1-amp inductive load at 28 Vdc.

d. Check both circuits of the trigger switch (11) for proper operation with a 5-amp inductive load at 28 Vdc. Actuating travel (at the tip of the trigger) of the trigger switch to make the first contact (an audible click) is **1/8** inch minimum. The force required is **2-1/2 (±3/4)** pounds. Travel to engage the detent is **11/32** inch maximum. Force required to go through the detent is **7-1/2 (±3/4)** pounds. The point at which the second contact closes lies between the detent and point of maximum travel with a minimum of **1/32**-inch overtravel required and a force of **6** pounds (plus **1** pound or minus **2** pounds).

e. Ground test at 1000 vrms, 60 Hz across each normally open contact and between each wire and the metal grip body.

f. Inspect lead wires and vinyl insulation sleeve to see that they are tied securely where they emerge from the grip.

9-147. CAUTION AND WARNING LIGHT SYSTEM. A

9-148. DESCRIPTION — CAUTION AND WARNING LIGHTS SYSTEM. The caution and warning lights system includes a caution panel (A1), warning lights (DS12) (DS13) (DS14) and master caution light (DS15), warning light test switch (S86), and engine out tone generator (DS17). The caution panel contains a number of internally lighted capsules that illuminate when associated switches (sensors) located at different places in the helicopter actuate to complete circuits; thus indicating malfunctions in the systems being monitored by the sensors. The panel is energized from the 28 Vdc bus and is protected by a 5 ampere circuit breaker (CB17). Refer to figures 9-1 and F-12.

9-149. TESTING — CAUTION AND WARNING LIGHTS SYSTEM. During the following tests, the MASTER CAUTION light shall illuminate each time a caution panel segment illuminates and shall extinguish when reset. A caution panel segment will illuminate each time a fault exists and will remain illuminated until fault is cleared. Each time a caution panel segment becomes illuminated it shall flash at a rate of **3 to 5** times per second until system is reset; then segment shall remain steady on, until fault is cleared. The system shall be reset after each check in readiness for the next fault indication.

a. Caution Light Panel.

(1) Ensure that CAUTION PNL LTS circuit breaker is closed.

(2) Position RESET/TEST switch to TEST and check that all caution lights segments and MASTER CAUTION light flash and continue to flash while switch is held in TEST position. Check that lights flash at a rate of **3 to 5** times per second.

(3) Release the RESET/TEST switch and check that MASTER CAUTION light is extinguished and caution panel segments are in on/off condition listed in (6) below.

(4) Depress the BRIGHT/DIM switch momentarily to DIM. Check that the caution lights do not dim.

(5) Rotate the instrument lights dimmer control clockwise from OFF. Depress the caution panel brightness switch momentarily to DIM. Check that the caution lights dim and remain dimly illuminated.

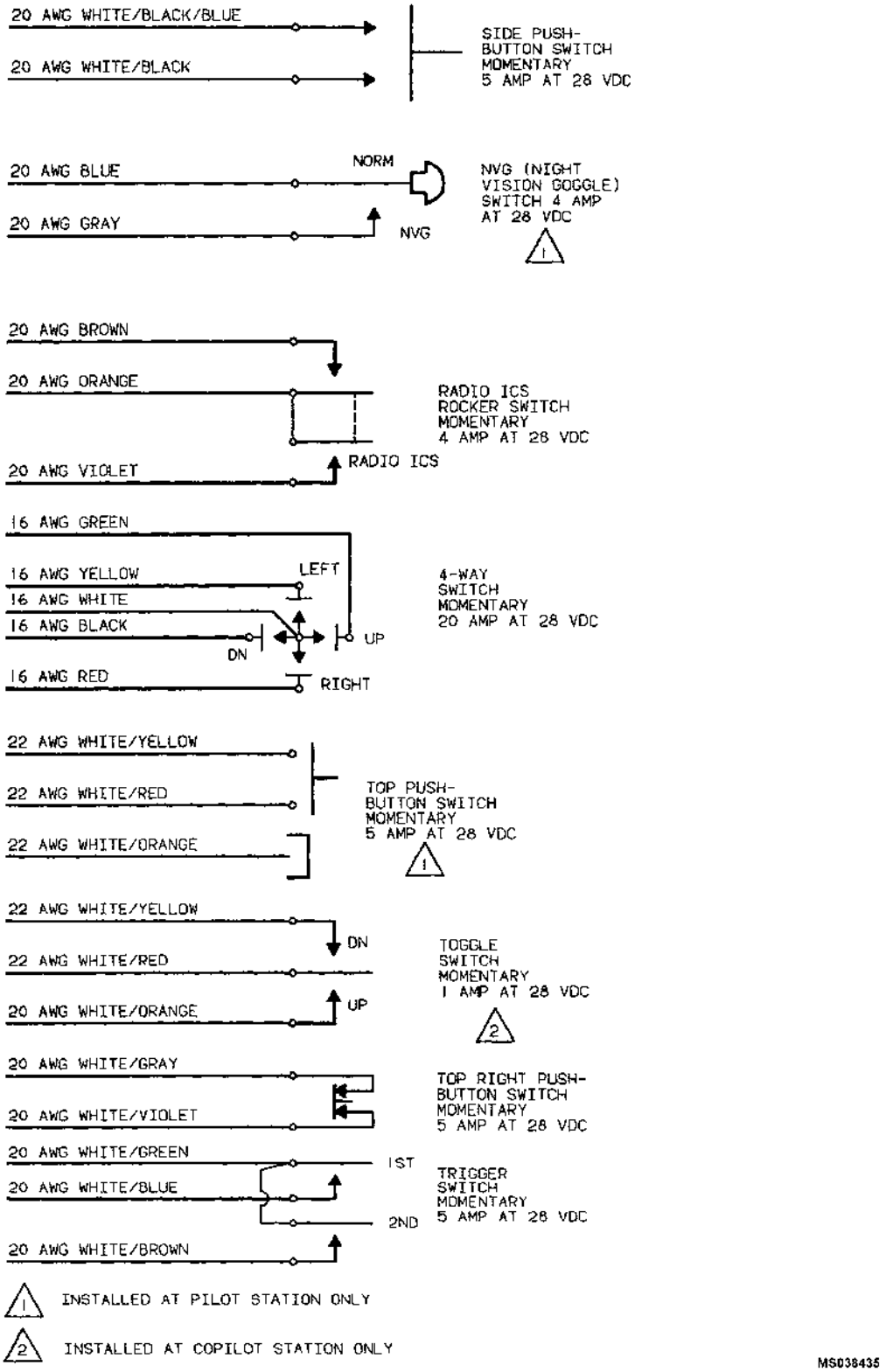

Figure 9-19. Cyclic Stick Grip Assembly Internal Wiring Schematic C

(6) Momentarily depress the BRIGHT/DIM switch to BRIGHT. Check that caution lights become brightly illuminated.

Caution Light		ON/OFF Condition	Para Test Reference
FUEL BOOST		OFF	9-149b
20 MIN FUEL	1	ON OR OFF	9-149c
FUEL FILTER		OFF	9-149f
ENG OIL BYPASS	2	ON OR OFF	9-149g
ENG CHIP DET		OFF	9-149j
XMSN CHIP DET		OFF	9-149k
T/R CHIP DET		OFF	9-149l
INST INVERTER		ON	9-149m
DC GENERATOR		ON	9-149n
HYD PRESS		ON	9-149o

1 Depends on fuel level.

2 Depends on oil level.

NOTE

The following checks apply to both OH-58A and OH-58C helicopters.

b. Fuel Boost Caution Light.

(1) To check fuel boost caution light, remove plug (P172) from fuel pressure switch and connect a jumper between A and B terminals on the cannon plug.

(2) Turn the battery switch and fuel boost pump switch on, the light should illuminate.

(3) Turn the battery switch off, disconnect the jumper and reinstall the cannon plug on the fuel pressure switch.

(4) Turn the battery switch on and the fuel boost caution light should be extinguished.

NOTE

If, after reinstalling plug (P172), light is still on, check fuel boost system for proper operation.

c. Twenty-minute fuel caution light. The 20 MINUTE FUEL caution light shall be tested in accordance with either paragraph 9-149 d or paragraph 9-149 e, as applicable.

d. Procedure for Less Than Twenty Minutes Fuel.

(1) Disconnect wire E40A22 at splice near fuel tank. Check that 20 MINUTE FUEL caution light extinguishes.

(2) Reconnect wire E40A22 at splice. Check that 20 MINUTE FUEL caution light is illuminated

e. Procedure for More Than Twenty Minutes Fuel.

(1) Disconnect wire E40A22 at splice near fuel tank and connect to ground. Check that 20 MINUTE FUEL caution light is illuminated.

(2) Remove wire E40A22 from ground. Check that 20 MINUTE FUEL light is extinguished.

(3) Reconnect wire E40A22 at splice. Check that the 20 MINUTE FUEL caution light remains extinguished.

f. Fuel Filter Caution Light After Compliance with MWO 1-1520-228-50-48.

(1) Disconnect plug (9, figure 10-7), from the externally mounted fuel filter head (8). Temporarily short pins A and B on plug. Check that FUEL FILTER caution light is illuminated.

(2) Remove temporary short between pins A and B of plug (9). Check that FUEL FILTER caution light is extinguished.

(3) Reconnect plug (9) to externally mounted fuel filter head (8). Check that the connection is properly mated (tight and secure) and that FUEL FILTER caution light is extinguished.

g. Engine Oil Bypass Caution Light. This test may be performed in conjunction with the engine oil bypass valve test.

h. Procedure for No Engine Oil in Tank.

(1) Disconnect wire Q30A22 from terminal 2 on terminal board (TB14). Check that ENG OIL BYPASS caution light is extinguished.

(2) Reconnect wire Q30A22 to terminal 2 on (TB14). Check that ENG OIL BYPASS caution light is illuminated. Check that connection is tight and secure.

i. Procedure for Engine Oil in Tank.

(1) Place a jumper wire from terminal 2 on terminal board (TB14) to helicopter structure. Check that ENG OIL BYPASS caution light is illuminated.

(2) Remove jumper wire. Check that ENG OIL BYPASS caution light is extinguished.

j. Engine Chip Detector Caution Light.

(1) Remove plug (P113) from one of the engine chip detectors. Create a temporary short between pin A of plug (P113) and helicopter structure. Check that ENGINE CHIP DET caution light is illuminated.

(2) Remove temporary short created in step (1). Check that ENGINE CHIP DET caution light is extinguished.

(3) Reconnect plug (P113) to engine chip detector. Check that connection is properly made and that the ENGINE CHIP DET caution light remains extinguished.

(4) Remove plug (P126) from the other engine chip detector. Create a temporary short between pin A of plug (P126) and helicopter structure. Check that ENGINE CHIP DET caution light is illuminated.

(5) Remove temporary short. Check that ENGINE CHIP DET caution light is extinguished.

(6) Reconnect plug (P126) to engine chip detector. Check that connection is properly made and that ENG CHIP DET caution light remains extinguished.

k. Transmission Chip Detector Caution Light.

(1) Create a temporary short between the stud on one of the transmission chip detectors and helicopter structure. Check that XMSN CHIP DET caution light is illuminated.

(2) Remove temporary short. Check that XMSN CHIP DET caution light is extinguished.

(3) Create a temporary short between the stud on the other transmission chip detector and helicopter structure. Check that XMSN CHIP DET caution light is illuminated.

(4) Remove temporary short. Check that XMSN CHIP DET caution light is extinguished.

l. Tail Rotor Chip Detector Caution Light.

(1) Create a temporary short between the stud on the chip detector in the tail rotor gearbox and helicopter structure. Check that T/R CHIP DET caution light is illuminated.

(2) Remove temporary short. Check that T/R CHIP DET caution light is extinguished.

m. Instrument Inverter Caution Light. The INST INVERTER caution light is tested as part of the inverter circuitry.

n. DC Generator Caution Light. The DC GENERATOR caution light is tested as a part of the generator circuitry.

o. Hydraulic Pressure Caution Light.

(1) Connect hydraulic power cart to the helicopter hydraulic system. Gradually increase pressure to the point where the HYD PRESS caution light extinguishes. Check that HYD PRESS caution light extinguished by 400 psig increasing pressure.

(2) Gradually reduce pressure to the point where the HYD PRESS caution light illuminates. Check that HYD PRESS caution light illuminates by 300 psig decreasing pressure.

(3) Relieve pressure and disconnect the hydraulic power cart. Check that HYD PRESS caution light remains illuminated.

p. Warning Lights Panel.

q. Master Caution Light. The MASTER CAUTION light is tested in conjunction with the caution lights panel.

r. Engine Out Warning (Visual and Audio). Tests in this paragraph are applicable only to helicopters prior to helicopters S/N 72-21061.

NOTE

Refer to paragraph 9-149 u., for testing of helicopter S/N 72-21061 and subsequent. Test engine out warning system by operating the engine and using tachometer test set or equivalent.

(1) Remove plug (P10) from the gas producer tachometer generator and connect it to the appropriate receptacle on the test set (T3). Close CAUTION PNL LTS circuit breaker and raise the collective stick from its lowest extreme. Check that ENGINE OUT warning light is illuminated and that engine out warning alarm is audible.

(2) Increase tachometer generator RPM until ENGINE OUT warning light is extinguished. Check that GAS PRODUCER RPM indicator reads **55 (±3)%** and that indication is the approximate reading on the test set. Check that engine out warning alarm is not audible.

(3) Depress the WARNING LTS TEST switch. Check that ENGINE OUT warning light illuminates. Release the test switch and check that ENGINE OUT warning light extinguishes.

(4) Decrease tach generator RPM to **50%**. Check that ENGINE OUT warning light is illuminated and that engine out warning alarm is audible.

(5) Move the collective stick to its lowest extreme. Check that ENGINE OUT warning light remains illuminated and that engine out warning alarm is not audible.

(6) Remove plug (P10) from test set and reconnect to the gas producer tach generator on the engine. Check that the connector is properly mated, tight, and secure.

NOTE

The engine out warning system may be tested in conjunction with the GAS PRODUCER RPM indicator.

s. Transmission Oil Pressure Warning Light.

(1) Check that XMSN OIL PRESS warning light is illuminated.

(2) Disconnect transmission oil pressure line at the engine firewall. Connect a hand pressure gun to the line leading to the pressure transducers. Gradually increase pressure until XMSN OIL PRESS warning light is extinguished. Check that caution light extinguishes at a maximum increasing pressure of **36** psig.

(3) Depress WARNING LTS TEST switch. Check that XMSN OIL PRESS warning light illuminates when test switch is depressed and extinguishes when test switch is released.

(4) Continue to decrease pressure on the transducer until XMSN OIL PRESS warning light illuminates. Check that the warning light illuminates at a decreasing pressure of **30 (±2)** psig.

(5) Reduce pressure to zero. Disconnect hand pressure gun and reconnect the transmission lines at the firewall. Check that XMSN OIL PRESS warning light is illuminated and that transmission line connections are tight and secure.

t. Transmission Oil Hot Warning Light.

(1) Check that XMSN OIL HOT warning light is extinguished.

(2) Depress WARNING LTS TEST switch. Check that the XMSN OIL HOT warning light is illuminated when switch is depressed and extinguished when switch is released.

(3) Create a temporary short from stud on transmission oil temperature switch (S3) to the helicopter structure. Check that XMSN OIL HOT warning light is illuminated.

(4) Remove temporary short. Check that XMSN OIL HOT warning light is extinguished.

u. ENGINE OUT and ROTOR RPM Warning. The following tests are applicable for helicopter S/N 72-21061 and subsequent. For Engine Out Warning tests on helicopter prior to S/N 72-21-61, see paragraph 9-149, step r.

(1) Engine Out Warning (Visual and Audio).

(a) Remove plug (P10) from the gas producer tachometer generator and connect it to the appropriate receptacle on the test set (T3). Remove plug (P174) from the rotor RPM sensor and lay it aside. Close CAUTION PANEL LTS circuit breaker and raise collective stick from its lowest extreme. Check that ENGINE OUT warning light is illuminated and that generator tone is audible.

(b) Increase tach generator RPM until ENGINE OUT warning light is extinguished. Check that GAS PRODUCER RPM indicator reads **55 (±3)%** and that indication is the approximate reading on the test set. Check that generator tone is not audible.

(c) Depress the WARNING LTS TEST switch. Check that ENGINE OUT warning light illuminates. Release the test switch and check that ENGINE OUT warning light extinguishes.

(d) Decrease tach generator RPM to **50%**. Check that ENGINE OUT warning light is illuminated and that generator tone is audible.

(e) Move the collective stick to its lowest extreme. Check that ENGINE OUT warning light remains illuminated and that generator tone is not audible.

(f) Remove plug (P10) from test set and reconnect to the gas producer tach generator on the engine. Reconnect plug (P174) to rotor rpm sensor. Check that the connections are properly mated, tight, and secure.

NOTE

(2) Rotor RPM Warning (Visual and Audio).

(a) Remove plug (P6) from the rotor tachometer generator and connect it to the appropriate receptacle on the test stand. Remove plug (P38) from the engine out rpm sensor and lay it aside. Close CAUTION PNL LTS circuit breaker and raise the collective stick from its lowest extreme. Check that ROTOR RPM warning light is illuminated and that tone generator is audible.

(b) Increase tach generator rpm until ROTOR RPM warning light is extinguished. Check that ROTOR RPM indicator reads **335 (±5)** rpm and that indication is the approximate reading on the test stand. Check that tone generator is not audible. The sensor has been adjusted to the proper setting; however, if the actuation point of **335 (±5)** rpm is not obtained during operation, this setting may be changed. An adjustment screw is located on the exterior of the sensor housing. Loosen the locknut and turn the screw clockwise to obtain a higher actuation point and counterclockwise to obtain a lower actuation point. Tighten locknut upon completion of adjustment. Sensitivity of the adjustment screw is approximately four rotor rpm per revolution. Observe actuation point on decreasing rpm only.

(c) Depress the WARNING LTS TEST switch. Check that ROTOR RPM warning light illuminates. Release the test switch and check that ROTOR RPM warning light extinguishes.

(d) Decrease tach generator rpm to **325** rpm. Check that ROTOR RPM warning light is illuminated and that tone generator is audible.

(e) Move the collective stick to its lowest extreme. Check that ROTOR RPM warning light remains illuminated and that tone generator is not audible.

(f) Remove plug (P6) from test stand and reconnect to the rotor tach generator. Reconnect plug (P38) to the engine out rpm sensor. Check that the connectors are properly mated, tight, and secure.

NOTE

The rotor rpm warning system may be tested in conjunction with the dual tachometer indicator.

9-150. CAUTION AND WARNING LIGHT SYSTEM. C

9-151. DESCRIPTION — CAUTION AND WARNING LIGHTS SYSTEM. The caution and warning lights system includes a caution panel (A1), warning lights (DS12) (DS13) (DS14) and MASTER CAUTION light (DS15), warning light test switch (S86), and engine out tone generator (DS17). The caution panel contains a number of internally lighted capsules that illuminate when associated switches (sensors) located at different places in the helicopter actuate to complete circuits; thus indicating malfunctions in the

systems being monitored by the sensors. The panel is energized from the 28 Vdc bus and is protected by a 5 ampere circuit breaker (CB17). Refer to figures 9-1 and F-34.

9-152. TESTING - CAUTION AND WARNING LIGHTS SYSTEM. During the following tests, the **MASTER CAUTION** light shall illuminate each time a caution panel segment illuminates and shall extinguish when reset. A caution panel segment will illuminate each time a fault exists and will illuminate steady until the fault is cleared. The system shall be reset after each check in readiness for the next fault indication.

a. Caution Light Panel.

(1) Ensure that **CAUTION PNL LTS** circuit breaker is closed. Check that **MASTER CAUTION** light and each caution panel segment are illuminated steady.

(2) Reset **MASTER CAUTION** light and caution panel segments by placing caution panel **RESET/TEST** switch to **RESET** and releasing. Check that the **MASTER CAUTION** lights is extinguished and that caution lights are steadily illuminated.

(3) Place and hold **RESET/TEST** switch to **TEST**. Check that all caution lights and **MASTER CAUTION** are illuminated steady as long as the switch is held to **TEST**.

(4) Release the **RESET/TEST** switch. Check that the **MASTER CAUTION** light is extinguished and the caution lights are steadily illuminated.

(5) Depress the **BRIGHT/DIM** switch momentarily to **DIM**. Check that the caution lights do not **DIM**. Check that the **MASTER CAUTION** and warning lights **DIM**.

NOTE

TEST-RESET function on annunciator panel does not apply to warning lights. Warning lights test switch is located on the instrument panel.

(6) Rotate the instrument lights dimmer control clockwise from **OFF**. Depress the caution panel brightness switch momentarily to **DIM**. Check that the caution lights dim and remain dimly illuminated. Check that the **MASTER CAUTION** and warnings lights also dim. Check that **MASTER CAUTION** illuminates until reset.

(7) Momentarily depress the **BRIGHT/DIM** switch to **BRIGHT**. Check that the caution lights become brightly illuminated. Check that the **MASTER CAUTION** and warning lights also become brightly illuminated. Check that **MASTER CAUTION** illuminates until reset.

b. For all other tests to paragraph 9-149 steps 9-149b. through 9-149u.

CAUTION

To prevent damage to caution panel internal circuitry, disconnect external power and turn battery switch to OFF position prior to removing or replacing CAUTION PANEL warning lights.

9-153. TROUBLESHOOTING - CAUTION AND WARNING LIGHTS SYSTEM. Refer to circuit diagram (figure F-12) and trace malfunctioning circuit or loop, using standard electronic troubleshooting procedures and standard test equipment. Localize malfunctioning switch components, and repair or replace as required.

9-154. TRANSMISSION OIL TEMPERATURE SWITCH.

9-155. DESCRIPTION - TRANSMISSION OIL TEMPERATURE SWITCH. The (S3) transmission oil temperature switch, located adjacent to temperature bulb on left side of transmission, is a hermetically sealed, temperature operated, single-pole switch that closes when temperature of transmission oil rises above safe operating range. This energizes a **XMSN OIL HOT** warning light in the master caution and warning system.

9-156. REMOVAL - TRANSMISSION OIL TEMPERATURE SWITCH. Refer to paragraph 6-245.

9-157. INSPECTION - TRANSMISSION OIL TEMPERATURE SWITCH. Refer to paragraph 6-246.

9-158. INSTALLATION - TRANSMISSION OIL TEMPERATURE SWITCH. Refer to paragraph 6-247.

9-159. FUEL PRESSURE SWITCH.

9-160. DESCRIPTION — FUEL PRESSURE SWITCH. A pressure operated switch (S12), located in the discharge port of the fuel boost pump provides an indication of pump failure. Should the pressure drop on the pump, the switch closes, energizing FUEL BOOST caution light on the caution panel.

9-161. REMOVAL — FUEL PRESSURE SWITCH. Refer to paragraph 8-251.

9-162. INSPECTION — FUEL PRESSURE SWITCH.

a. Inspect switch for clogged pressure port.

b. Using a source of controlled and monitored pressure, (MP-1, (T6) and **0-30** PSI gauge, (Tx), and a test light or ohmmeter, inspect and test switch as follows:

(1) Connect leads of light or ohmmeter across pins A and B of the fuel pressure switch.

(2) The switch contacts should be closed (test light on or continuity between pins A and B.)

(3) Slowly apply increasing pressure to the pressure port of the switch.

(4) The switch contacts should open (test light off or no continuity between pin A and B) before increasing pressure exceeds **8** psi.

(5) Slowly decrease pressure from pressure port of the switch.

(6) The switch contacts should close (test light on or continuity between pin A and B) before decreasing pressure is less than **4** PSI.

NOTE

The system caution light should be on whenever fuel pressure is less than 4 psi and off whenever the fuel pressure is above 8 psi.

Switches which function at any pressure between 4 and 8 psi may be continued in service, for example; switches which function at 6 psi on both increasing and decreasing pressure are acceptable.

(7) Replace switch if it does not operate at the prescribed range.

9-163. INSTALLATION — FUEL PRESSURE SWITCH. Refer to paragraph 8-253.

9-164. FUEL FILTER PRESSURE SWITCH.

9-165. DESCRIPTION — FUEL FILTER PRESSURE SWITCH. The fuel filter pressure switch (SIO) attached to a bracket beneath the engine is also called the fuel filter differential pressure switch or the fuel filter bypass warning switch. The fuel filter pressure switch senses the pressure drop across the engine fuel pump filter through before and after filter sense hoses (figure 4-1). As foreign material collects on the filter the pressure drop increases. When the pressure drop reaches approximately **0.750** psi the fuel filter pressure switch closes and energizes the FUEL FILTER caution light on the caution panel alerting the operator of a partially clogged fuel filter and impending filter bypass. Actual filter bypass occurs when the pressure drop across the filter reaches **0.900 to 1.00** psi on the OH-58A or **2.00 to 2.50** psi on the OH-58C.

CAUTION

The switch has been preset at the proper operating point. Do not attempt adjustment below depot level.

9-166. REMOVAL — FUEL FILTER PRESSURE SWITCH. (Figure 4-1).

a. Disconnect fuel filter sense hoses (5 and 6, figure 4-1) to fuel filter bypass warning switch (7) fittings.

b. Cut lockwire and disconnect plug (P23) from the fuel filter bypass warning switch.

c. Remove nuts (59) and washers (58) from the mounting studs of the fuel filter bypass warning switch, then remove fuel filter bypass warning switch (7) from bracket attached to lower firewall beneath the engine.

9-167. INSPECTION — FUEL FILTER PRESSURE SWITCH.

a. Disconnect the after filter sense hose (5, figure 4-1) at the switch and cap the hose.

b. Position fuel selector lever to the open position.

c. Activate the fuel boost pump. The FUEL FILTER caution light on the caution light panel should illuminate.

d. If the light illuminates, turn off fuel boost pump, remove cap, and reconnect the after filter sense hose. Bleed the engine fuel system. Refer to

TM 55-2840-241-23.

e. If the light fails to illuminate, check the electrical system. Refer to paragraph 9-147 and check switch as follows:

f. Disconnect plug (P23) from the switch. Check continuity between terminals B and C on the switch. With boost pump off there should be an open circuit between terminals B and C. With after filter sense hose disconnected and boost pump on there should be a closed circuit between terminals B and C.

g. If switch fails electrical test, check for clogged or restricted switch pressure port or before filter sense hose (6, figure 4-1). Adequate fuel and boost pump pressure are also required for a successful test.

h. Test the fuel filter switch for proper actuation point as follows:

(1) Remove the after filter and before filter hoses from the switch. Refer to paragraph 9-166.

(2) Install an appropriate fitting with approximately 36 inches of clear plastic tubing at the before filter switch port (outboard side as mounted on the aircraft).

(3) Insert a small funnel in the free end of the tubing and fill with fuel.

(4) Check the switch contacts for closing with an ohmmeter. The switch contacts should close when the fuel level is raised 25 to 29 inches above the switch port.

(5) Replace the switch if the contacts are not closed when the fuel level is raised to 32 inches above the switch port.

i. Replace switch that fails any of the above inspections.

j. Repeat steps a. through d.

9-168. INSTALLATION — FUEL FILTER PRESSURE SWITCH. (Figure 4-1.)

a. Install fuel filter bypass warning switch into bracket attached to lower firewall beneath the engine. Install and secure the washers (58) and nuts (59) on the mounting studs of fuel filter bypass warning switch.

b. Connect fuel filter sense hoses (5 and 6, figure 4-1) to the fuel filter bypass warning switch (7) fittings.

c. Connect plug (P23) to the fuel filter bypass warning switch. Check that the connection is properly mated (tight and secure), and that the FUEL FILTER caution light is extinguished. Install lockwire (C96).

9-169. TRANSMISSION OIL PRESSURE SWITCH.

9-170. DESCRIPTION — TRANSMISSION OIL PRESSURE SWITCH. Transmission oil pressure switch (S13), located on the cabin roof to the left of the transmission, is a pressure operated switch and serves to energize XMSN OIL PRESS warning light on the instrument panel, warning the pilot of low oil pressure.

9-171. REMOVAL — TRANSMISSION OIL PRESSURE SWITCH. Refer to paragraph 6-279.

9-172. INSPECTION — TRANSMISSION OIL PRESSURE SWITCH (S13).

a. Inspect switch for clogged pressure port.

b. Test switch (S13) using a source of controlled and monitored pressure and test light connected across the 6/32 stud and case; slowly apply increasing pressure to the pressure port of the switch. At **36** psig the switch should actuate to open, extinguishing the test light. On decreasing pressure the switch should close at **30 (±2)** psig and illuminate the test lamp.

NOTE

The switch is preset at the factory and no adjustment is provided. Should the switch fail to operate at this prescribed range, replacement of the switch is necessary.

9-173. INSTALLATION — TRANSMISSION OIL PRESSURE SWITCH. Refer to paragraph 6-280.

9-174. CHIP DETECTORS.

9-175. DESCRIPTION — CHIP DETECTORS. Chip detectors (E3 and E6) installed on the engine provide an indication of the presence of metal particles in the engine lubrication system on the ENG CHIP DET caution panel segment. The transmission is equipped with chip detectors (E5) and (E7) to provide illumination of XMSN CHIP DET caution panel segment. The tail rotor gearbox is equipped with chip detector (E4) which provides illumination of T/R CHIP DET caution panel segment. The lights are illuminated when metal particles are present in sufficient quantity on the magnetic pole of the detector element to bridge the element.

WARNING

Isopropyl alcohol is flammable and toxic to eyes, skin, and respiratory tract. Wear protective gloves and goggles/face shield. Avoid repeated or prolonged contact. Use only in well-ventilated areas (or use approved respirator as determined by local safety/industrial hygiene personnel). Keep away from open flames, sparks or other sources of ignition.

9-176. CLEANING — CHIP DETECTORS. Clean detectors with isopropyl alcohol (C150).

9-177. INSPECTION — CHIP DETECTORS.

a. Inspect detector for stripped or damaged threads or bayonet pins.

b. Check for accumulation of metal particles on magnet. Presence of metal may indicate need for further investigation and corrective action.

NOTE

Refer to paragraph 6-289 for additional information.

c. Inspect seal for damage or distortion.

9-178. REMOVAL — CHIP DETECTORS. Refer to paragraph 6-288.

9-179. REPAIR OR REPLACEMENT — CHIP DETECTORS. Remove packing and replace detector if threads or bayonet pins are damaged.

9-180. INSTALLATION — CHIP DETECTORS. Refer to paragraph 6-290.

9-181. HYDRAULIC PRESSURE SWITCH.

9-182. DESCRIPTION — HYDRAULIC PRESSURE SWITCH. The hydraulic switch (S67) is installed on the right side of the solenoid valve. When hydraulic pressure is below **300** psig the pressure switch causes the HYD PRESS warning light in the pedestal to illuminate.

NOTE

For additional description and maintenance, refer to paragraph 7-49.

9-183. ENGINE OUT WARNING SWITCH.

9-184. DESCRIPTION — ENGINE OUT WARNING SWITCH. An RPM sensor is connected to the gas producer tachometer. Power is supplied from the CAUTION PNL circuit breaker and connects to the ENGINE OUT warning light and to a tone generator which produces a tone in the pilot headset. The engine out warning switch enables the pilot to prevent audio warning in the headset by lowering the collective pitch to the full down position.

9-185. REMOVAL — ENGINE OUT WARNING SWITCH.

a. Remove copilot seat and seat pan. Refer to paragraph 2-86.

b. Remove two screws attaching engine out warning switch to mounting bracket beneath collective jackshaft in void beneath copilot seat.

c. Disconnect electrical wires and remove switch.

9-186. INSTALLATION — ENGINE OUT WARNING SWITCH.

a. Attach electrical wires and install switch with two screws to bottom of mounting bracket beneath collective jackshaft in void beneath copilot seat.

b. Loosen clamp and striker arm on jackshaft and position so that when collective is full down, striker arm depresses engine out warning switch.

c. Check engine out warning switch with battery on. Audio should be heard through pilot/copilot headset when collective is raised approximately one inch.

d. Install copilot seat pan and seat. Refer to paragraph 2-88.

9-187. SHUNTS AND BUS BARS.

9-188. INSPECTION — SHUNTS AND BUS BARS. Inspect the shunts and bus bars for the following:

a. Corrosion

b. Deep scratches

c. Deformed

d. Discoloration

e. Any obvious damage.

9-189. REMOVAL — SHUNTS AND BUS BARS. Remove all attaching hardware and remove shunt or bus bar from mounting point.

9-190. REPAIR — SHUNTS AND BUS BARS. If shunts or bus bars show any obvious signs of damage, replace shunt or bus bar.

9-191. INSTALLATION — SHUNTS AND BUS BARS. Place shunt or bus bar in mounting position and install attaching hardware.

9-192. TERMINAL BOARDS.

9-193. INSPECTION — TERMINAL BOARDS. Inspect the terminal boards for the following:

a. Cracks

b. Corrosion

c. Security

d. Damaged threads.

9-194. REMOVAL — TERMINAL BOARDS. Remove all attaching hardware and remove terminal board from mounting point.

9-195. REPAIR — TERMINAL BOARDS. If terminal board has any obvious damage, replace terminal board.

9-196. INSTALLATION — TERMINAL BOARDS. Place terminal board in mounting position and install attaching hardware to hold terminal board in place.

SECTION II. ALTERNATING CURRENT SYSTEM

9-197. ALTERNATING CURRENT SYSTEM.

9-198. GENERAL — ALTERNATING CURRENT SYSTEM. Alternating current is supplied to the 115 Vac bus in the overhead console by a static inverter. The system includes the inverter (PS1), inverter switch (S82), and the inverter fail relay (K10), and supplies operating power for the OH-58A/C gyro compass and attitude gyro and for the OH-58C CONUS NAV and altimeter-encoder.

9-199. INVERTER.

9-200. DESCRIPTION — INVERTER. The 65 volt ampere 115 Vac 400 Hz single phase static inverter (PS1) is located on the equipment shelf in the avionics compartment.

9-201. INSPECTION — INVERTER. Inspect inverter for cracked or damaged case, proper bonding and security of mounting, broken connector pins, or cracked connector inserts and for proper operation.

9-202. TESTING — INVERTER.

a. Open all circuit breakers and energize external power source.

b. Close INV PWR and CAUTION PNL LTS circuit breakers. Position NON-ESS BUS switch to NORM. Close all ac circuit breakers. Check that INST INVERTER caution light is illuminated.

c. Position inverter switch (S82) to INV. Check that inverter is energized and that INST INVERTER caution light is extinguished.

d. Check that voltage on the ac bus is **113.5 (±5)** volts when all ac loads are energized and that nonessential bus voltage is **28 (±0.5)** Vdc.

e. If the ac voltage is not within the limits specified above, replace the inverter.

f. Position inverter switch to OFF. Check that voltage on the ac bus decreases to zero and that inverter becomes de-energized.

9-203. TROUBLESHOOTING — INVERTER. Refer to figure F-4 and table 9-8.

NOTE

Before using table 9-8, ensure all normal operational checks have been performed. If a malfunction exists which is not listed in table 9-8, notify the next higher level of maintenance.

9-204. REMOVAL — INVERTER.

a. Place BAT switch to OFF. Remove external power.

b. Gain access to inverter.

c. Disengage connector and protect with cap.

d. Remove attaching hardware.

e. Lift inverter from compartment.

9-205. REPAIR OR REPLACEMENT — INVERTER. Replace with serviceable like item and return removed component to depot if inspection requirements are not met.

9-206. INSTALLATION — INVERTER.

a. Position inverter.

b. Remove protective cap from connector and engage with inverter.

c. Install attaching hardware.

Table 9-8. Troubleshooting — Inverter

CONDITION / TEST OR INSPECTION	CORRECTIVE ACTION
1. Inverter fails to function.	
STEP 1. Check for open circuit breaker, faulty wiring, loose connections at switch (S82) or power circuits.	**Reset circuit breaker, repair wiring, or tighten loose connections at switch or power circuit.**
STEP 2. Check for defective inverter.	**Replace inverter.**
2. Incorrect output voltage or frequency by inverter.	
STEP 1. Check input voltage to inverter.	**Correct primary low voltage conditions.**

SECTION III. STARTING SYSTEM

9-207. STARTER SYSTEM.

9-208. DESCRIPTION — STARTER SYSTEM. The starter-generator (G1) is located on the underside of the engine. This unit is used to start the engine, charge the battery and supply power for operation of dc equipment. The starter is energized by the starter-relay (K3) located in the aft electrical compartment. This relay is actuated by the starter switch (S6) located on the pilot collective stick. Refer to figures 9-1 and F-8.

NOTE

Refer to paragraph 9-38 for coverage of starter-generator.

9-209. CLEANING — STARTER SYSTEM. Refer to paragraph 9-40.

9-210. INSPECTION — STARTER SYSTEM. Refer to paragraph 9-41.

9-211. TESTING — STARTER SYSTEM.

a. Pull fuel pump circuit breaker. Connect battery and position BAT switch to BAT or connect external power. Depress starter switch on pilot collective pitch stick and check starter system for normal operation.

b. Disconnect wires K4B8 and K4D8 from terminal C on the starter-generator and isolate them from ground. Connect an external power source at external power receptacle.

(1) Energize external power source. Ensure that ENG START circuit breaker is closed. Depress starter switch on pilot collective stick. Check that external power source voltage (approximately **28** Vdc) is present at end of wires K4B8 and K4D8 while starter switch is depressed.

(2) Release pilot starter switch. Check for no voltage at open end of wires K4B8 and K4D8.

(3) Open ENG START circuit breaker. Disconnect external power source. Reconnect wires K4B8 and K4D8 to terminal C on the starter-generator. Check that connections are tight and secure.

9-212. TROUBLESHOOTING — STARTER SYSTEM. Refer to figure F-8 and table 9-9.

NOTE

Before using table 9-9, ensure all normal operational checks have been performed. If a malfunction exists which is not listed in table 9-9, notify the next higher level of maintenance.

Table 9-9. Troubleshooting — Starter

CONDITION

TEST OR INSPECTION

CORRECTIVE ACTION

1. Starter fails to operate when switch is depressed.

STEP 1. Check circuit breaker.

Engage breaker if open or replace defective breaker.

STEP 2. Check battery condition.

Replace defective battery.

STEP 3. Check starter switch contacts for evidence of corrosion, burned contacts, etc.

Replace defective switch.

STEP 4. Check wiring for shorts and loose connections.

Repair or replace wiring. Tighten loose connections.

STEP 5. Check starter relay (K3) for operation.

Replace defective relay.

STEP 6. Check starter brushes for wear or binding.

Replace worn brushes or if binding in holder, remove, clean and reset brushes.

STEP 7. Check starter armature for pitting, burning, etc.

Replace starter if armature defective.

Table 9-9. Troubleshooting — Starter — Continued

CONDITION TEST OR INSPECTION	CORRECTIVE ACTION
2. Starter fails to produce sufficient rpm during start cycle (15% as indicated on gas producer tachometer indicator).	
STEP 1. Check battery terminal voltage.	**Replace battery if terminal voltage low or use external power source for start.**
STEP 2. Check starter bearings for wear or obvious damage.	**Replace starter.**

9-213. REMOVAL — STARTER SYSTEM. Refer to paragraph 9-42.

9-214. INSTALLATION — STARTER SYSTEMS. Refer to paragraph 9-44.

9-215. STARTER RELAY.

9-216. DESCRIPTION — STARTER RELAY. The starter relay (K3) (figure 9-1) is located on the equipment shelf above the avionics compartment and supplies direct current to the starter when the starter switch is depressed.

9-217. INSPECTION — STARTER RELAY. Inspect starter relay for the following:

a. Broken pins

b. Discoloration

c. Cracks.

9-218. REMOVAL — STARTER RELAY.

a. Be sure all electrical power is off.

b. Remove bus bar from relays (K2, K3, and K12).

c. Disconnect and tape wire ends using electrical tape (C137).

d. Remove mounting bolts and washers.

9-219. INSTALLATION — STARTER RELAY.

a. Position relay and install mounting hardware.

b. Remove tape and connect wires.

c. Install bus bar on relays (K2, K3, and K12).

9-220. STARTER SWITCH.

9-221. DESCRIPTION — STARTER SWITCH. The starter switch (S6), located in the collective stick switch box, is a double-pole, single-throw, pushbutton type switch. When switch is pressed to START position, the circuit to starter relay actuating coil and the igniter unit is energized.

9-222. INSPECTION — STARTER SWITCH. Refer to paragraph 9-128.

9-223. REMOVAL — STARTER SWITCH.

a. Position BAT switch to OFF.

b. Remove switch plate mounting screws and lift plate sufficiently to gain access to switch wires.

c. Disconnect switch wires and tape wire ends using electrical tape (C137).

d. Remove switch from panel.

NOTE

Utilize caution in switch removal to prevent chafing or damage to wires.

9-224. INSTALLATION — STARTER SWITCH.

a. Install switch to plate observing that indexing key is in proper position.

b. Remove tape and connect wires to switch.

c. Position plate on switch box and install mounting screws.

SECTION IV. IGNITION SYSTEM

9-225. IGNITION SYSTEM.

9-226. DESCRIPTION — IGNITION SYSTEM. The ignition exciter (Z1), furnished with the power turbine, is located below the tachometer generator on the lower left section of the engine and consists of a low tension capacitor discharge ignition exciter. This unit provides a repeating ignition arc during engine start cycle (figures 9-1 and F-8). A key lock ignition switch is installed on the aft left side of the center console.

9-227. INSPECTION — IGNITION SYSTEM.

a. Inspect cable for cracks, bends, and fraying.

b. Inspect igniter for dents.

c. Check components for security.

9-228. TESTING — IGNITION SYSTEM.

a. Pull fuel pump circuit breaker. Connect battery or external power and position BAT switch to BAT and key lock ignition to ON. Depress starter switch on pilot collective pitch stick and check ignition system for normal operation.

b. Operation Check — Igniter Only Circuitry. Remove wire J3B18 from ignition unit and isolate from ground. Connect external power source to the helicopter.

(1) Energize external power source. Ensure that IGN ENG circuit breaker is closed. Depress starter switch on pilot collective stick. Check that external power source voltage is present at open end of wire J3B18.

(2) De-energize external power source. Connect wire J3B18 to ignition unit. Check that connection is tight and secure.

NOTE

If MWO 55-1520-228-30-15 was applied, no operational check of engine relight circuit is required. Circuit was deactivated by TB 55-1520-228-20-18.

c. Operational Check — Igniter and Engine Relight Circuitry (Helicopters S/N 72-21061 and Subsequent). Remove wires J3B18 and J3C20 from ignition unit and isolate from each other and from ground.

(1) Energize external power source. Ensure that IGN ENG circuit breaker is closed. Check that ENG RELIGHT indicator light on the instrument panel is not illuminated.

(2) Depress ENG RELIGHT indicator light and release it. Check that light illuminates when depressed and extinguishes when released.

(3) Depress starter switch on pilot collective stick. Check that external power source voltage is present at open end of both wires J3B18 and J3C20.

(4) Release starter switch. Check that there is no voltage at open end of either wire J3B18 or wire J3C20.

(5) Disconnect pressure line from port on engine relight unit. Apply approximately **20** psig pressure at port. (A short length of plastic tubing may be attached to port to facilitate application of

pressure.) Quickly release the pressure and check that after **5** seconds: the external power source voltage appears at open end of wire J3C20 for approximately **3** seconds and then disappears; ENG RELIGHT indicator light illuminates and remains illuminated. Also, check that during the application of and releasing of pressure, no voltage appears on wire J3B18.

CAUTION

Pressures in excess of 80 psig may cause damage to engine relight unit.

(6) Place ENG RELIGHT switch to RESET OFF and then release it. Check that ENG RELIGHT indicator light extinguishes and remains extinguished.

(7) Reconnect engine air pressure hose to relight unit. Check that connection is properly made and is tight and secure.

(8) De-energize external power source. Connect wires J3B18 and J3C20 to igniter unit. Check that connections are tight and secure.

9-229. TROUBLESHOOTING — IGNITION SYSTEM. Refer to figure F-8 and table 9-10.

NOTE

Before using table 9-10, ensure all normal operational checks have been performed. If a malfunction exists which is not listed in table 9-10, notify the next higher level of maintenance.

Table 9-10. Troubleshooting — Ignition System

CONDITION TEST OR INSPECTION CORRECTIVE ACTION
1. Ignition system fails to operate when START switch is depressed.
STEP 1. Check for open or defective circuit breaker.
Reset open igniter circuit breaker or replace defective breaker.
STEP 2. Check for corroded or burned switch contacts.
Replace defective starter switch.
STEP 3. Loose connections or shorted wiring.
Repair or replace defective wiring or tighten loose connections.
STEP 4. Check for defective engine ignition system or defective igniter.
Refer to TM 55-2840-231-24 and replace defective igniter or other parts of engine ignition system.

9-230. IGNITION SWITCH.

9-231. DESCRIPTION — IGNITION SWITCH. The ignition switch is a key lock ignition switch installed on the aft left side of center console. When placed in the **ON** position it allows the pilot to start the engine.

9-232. INSPECTION — IGNITION SWITCH. Inspect for proper key operation, security, and electrical connections.

9-233. REMOVAL — IGNITION SWITCH.

a. Remove attaching hardware.

b. Lift ignition switch from console and disconnect electrical wires.

9-234. INSTALLATION — IGNITION SWITCH.

a. Connect electrical wire and position ignition switch in console.

b. Install attaching hardware.

SECTION V. LIGHTING PROVISIONS

9-235. LIGHTING PROVISION.

9-236. DESCRIPTION — LIGHTING PROVISIONS. Lighting provisions include equipment necessary for illumination of instruments and switches; also interior and exterior lighting used for night operation of the helicopter.

9-237. INTERIOR LIGHTS SYSTEM.

NOTE

For OH-58A Aircraft, MWO 55-1520-228-50-31 or MWO 55-1520-228-50-22 is required to be installed for NVG use. For OH-58C MWO 55-1520-228-50-32 is required to be installed for NVG use.

9-238. DESCRIPTION — INTERIOR LIGHTS SYSTEM A. The interior lights system consists of internal lighting for instruments, panel edge lights, dimming rheostats (R7 and R25), one transistorized dimming element (Q1), lighting terminal boards (TB6 and TB25), two cockpit lights, signal light, signal light receptacle (J169), and associated wiring as shown in figure F-13.

9-239. DESCRIPTION — INTERIOR LIGHTS SYSTEM C. The interior lights system consists of internal lighting for instruments, panel edge lights, console light switch (S122), and instrument light switch (S123) which operates instruments lights rheostat (R7), console light rheostat (R25), one transistorized dimming element (Q1), power supplies (PS1 and PS2), lighting terminal boards (TB1, TB6, and TB31), one cockpit light, signal light receptacle (J169), and associated wiring as shown in figure F-35.

9-240. INSPECTION — INTERIOR LIGHTS SYSTEM.

a. Check dimming rheostats (and power supplies C) for mounting security, cracks, and chips.

b. Check edge lights for security.

c. Check wiring for condition and security.

9-241. TESTING — INTERIOR LIGHTS SYSTEM.

a. Instrument Lights. Rotate instruments lights control (R7) and console lights control (R25) to their counterclockwise extremes (DIM).

(1) Ensure that **INSTR LTS** circuit breaker is closed. Rotate instrument lights control clockwise until dimming switch closes. Check that instrument lights illuminate dimly.

(2) Continue clockwise rotation of the instrument lights control. Check that the instrument lights increase in brightness as the control is rotated clockwise.

(3) Rotate the instrument lights control counterclockwise. Check that the instrument lights decrease in brightness as the control is rotated counterclockwise and extinguish when control reaches counterclockwise extreme.

b. Console lights:

(1) Position CSL LT switch to ON C .

(2) Rotate console lights control clockwise. Check that console lights and floodlights (including all avionic equipment lights) and control panel lights illuminate dimly.

(3) Continue clockwise rotation of the console lights control. Check that the lights which are illuminated in step (2) increase in brightness as the control is rotated clockwise.

(4) Rotate console lights control counterclockwise. Check that the lights which were illuminated in step (2) decrease in brightness as control is rotated counterclockwise and are extinguished when control reaches counterclockwise extreme.

(5) Position console lights switch to OFF C .

c. Position CSL LT switch to OFF C .

(1) Place NON-ESS BUS switch to NORM. Ensure that COCKPIT LTS circuit breaker is closed. Check that the cockpit light is operational in each mode (ON/OFF, DIM/BRIGHT, and SPOT/FLOOD).

(2) Ascertain that the cockpit light is in the OFF position.

d. Signal Light Receptacle. Ensure that SIGNAL LT circuit breaker is closed. Check that **28** Vdc is present between B and A (ground) of the signal light receptacle.

9-242. TROUBLESHOOTING — INTERIOR LIGHTS SYSTEM. Refer to figure F-13 and table 9-11 A . Refer to figure F-35 and table 9-12 C .

NOTE

Before using table 9-11 or 9-12, ensure all normal operational checks have been performed. If a malfunction exists which is not listed in tables 9-11 and 9-12, notify the next higher level of maintenance.

Table 9-11. Troubleshooting — Interior Lights A

CONDITION TEST OR INSPECTION	CORRECTIVE ACTION
1. Light fails to illuminate when circuit is energized.	
STEP 1. Check for open lamp filament or light improperly bonded to structure.	**Replace lamp or board lighting fixture to ensure good electrical ground.**
2. Circuit breaker opens when circuit is energized.	
STEP 1. Check for shorted wiring.	**Repair or replace defective wiring.**
3. Lights fail to respond to rheostat rotation.	
STEP 1. Check for defective transistor dimmer element (Q1).	**Replace dimmer element.**

Table 9-12. Troubleshooting — Interior Lights C

CONDITION / TEST OR INSPECTION	CORRECTIVE ACTION
1. Some instrument lights fail to illuminate when circuit is energized.	
STEP 1. Check for defective power supply (PS1 or PS2).	**Replace power supply.**
2. Circuit breaker opens when instrument lights circuit is energized.	
STEP 1. Check for shorted wiring.	**Repair or replace defective wiring.**
STEP 2. Check for defective power supply (PS1 or PS2).	**Replace power supply.**
STEP 3. Check for defective instrument lights rheostat.	**Replace rheostat.**
3. Console lights fail to illuminate when rheostat is rotated.	
STEP 1. Check for defective transistors dimming element (Q1).	**Replace dimmer element.**
STEP 2. Check for defective circuit breaker.	**Replace circuit breaker.**
4. Some console lights fail to illuminate.	
STEP 1. Defective console lights switch (S122).	**Replace switch.**

9-243. COCKPIT LIGHTS.

9-244. DESCRIPTION — COCKPIT LIGHTS. These lights have an ON-OFF switch and a rheostat incorporated into the lamp body. One light is located on the center post and the other on the overhead center beam behind the copilot. They may be positioned in their holders or hand-held.

9-245. INSPECTION — COCKPIT LIGHTS.

a. Inspect wiring for chafing and broken insulation.

b. Inspect terminals for security.

c. Inspect light base and rheostat for cracks and dents.

9-246. REMOVAL — COCKPIT LIGHTS.

a. Check that all electrical power is OFF.

b. Disconnect light wire from terminal board (TB5) and cover terminal for protection.

c. Disconnect ground lead from ground stud and remove cable from grommet.

d. Remove mounting nuts, washers, screws, and spacer, holding light base.

9-247. REPAIR — COCKPIT LIGHTS. Replace all items that fail inspection.

9-248. INSTALLATION — COCKPIT LIGHTS.

a. Place light and spacer in position and install screws, washers, and nuts.

b. Connect light by inserting cable through grommet, install and secure ground lead. Check for proper bonding to airframe structure.

c. Remove protective cover and connect light wire to terminal board (TB5).

9-249. TROUBLESHOOTING — COCKPIT LIGHTS. Refer to table 9-11 and figure F-13 for troubleshooting of cockpit lights.

9-250. EXTERIOR LIGHTS SYSTEM.

9-251. GENERAL — EXTERIOR LIGHTS SYSTEM. The exterior lights system consists of one infrared/white (IR/white (dual) landing/searchlight; two switches located in the pilot collective stick switchbox; two position lights (DS2 and DS3) located one each on the right and left tip of the horizontal stabilizer; position lights switch (S68), position lights dimming resistor (R33); two forward NVG position lights (IR) located forward of the FM homing antenna on both sides of aircraft, two lower NVG position lights (IR) forward of the APR-39 antenna support, one aft NVG position light (IR) located on top the taillight support assembly, one NVG position light switch located on the overhead console; one anticollision light (DS5), and one taillight located on the aft tip of the tailboom fairing. All lighting circuits are energized from essential or nonessential bus and protected by circuit breakers located in the overhead console.

9-252. GENERAL — EXTERIOR LIGHTS SYSTEM. AFTER COMPLIANCE WITH MWO 55-1520-228-50-32 A C . The exterior lights system consists of one IR/white (dual) landing/searchlight; two switches located in the pilot collective stick switchbox; two position lights (DS2 and DS3) located one each on the right and left tip of the horizontal stabilizer; position lights switch (S68), position lights dimming resistor (R33); two forward NVG position lights (IR) located forward of the FM homing antenna on both sides of aircraft, two lower NVG position light (IR) forward of the APR-39 antenna support, one aft NVG position light (IR) located on top of the taillight support assembly, one NVG position light switch located on the overhead console; one anticollision light (DS5), and one taillight located on the aft tip of the tail boom fairing. All lighting circuits are energized from essential or nonessential bus and protected by circuit breakers located in the overhead console.

9-253. LANDING LIGHTS.

9-254. DESCRIPTION — LANDING LIGHTS. Two landing lights (figure 9-1, DS7-DOWN, DS8-FWD) located in the lower center section of the nose are positioned to provide illumination both forward and downward from the helicopter.

9-255. CLEANING — LANDING LIGHTS.

a. Remove moisture and loose dirt with a clean soft cloth.

WARNING

Isopropyl alcohol is flammable and toxic to eyes, skin, and respiratory tract. Wear protective gloves and goggles/face shield. Avoid repeated or prolonged contact. Use only in well-ventilated areas (or use approved respirator as determined by local safety/industrial hygiene personnel). Keep away from open flames, sparks or other sources of ignition.

b. Remove grease, fungus, and ground-in dirt with a clean, lint-free cloth dampened with isopropyl alcohol (C150).

9-256. INSPECTION — LANDING LIGHTS.

a. Check light for defective or broken seal beam unit.

b. Check for loose electrical connections

c. Check for damaged or defective components.

9-257. TESTING — LANDING LIGHTS.

a. Place LDG LTS switch on pilot collective stick to OFF. Ensure that LDG LTS circuit breaker is closed. Check that both landing lights are off.

NOTE

Many OH-58 helicopter operators prefer to illuminate the forward facing light during hovering and taxiing at night to eliminate the glare created if the downward facing light was used. Accordingly, OH-58 users have permission to rewire the lights so that the forward facing light illuminates at the DOWN switch position. Wiring diagram figure F-15, indicates the correct way to accomplish the above. Wires L3A22 and L8A22 have been changed at TB27 from terminals 2 and 3 respectively to 3 and 2 respectively. On helicopters that have been rewired, the switch box on the pilot collective stick should read BOTH, FWD, and OFF. (On helicopters that have not been rewired, the switch box should read BOTH, DOWN and OFF.) Relabel the FWD position by hand on rewired installation. This note does not apply to the OH-58C which has a controllable searchlight.

b. Place LDG LTS switch to FWD position. Check to see that forward facing landing light illuminates.

c. Place LDG LTS switch to BOTH. Check that both landing lights illuminate.

9-258. TROUBLESHOOTING — LANDING LIGHTS. Refer to figure F-15 and table 9-13.

NOTE

Before using table 9-13, ensure all normal operational checks have been performed. If a malfunction exists which is not listed in table 9-13, notify the next higher level of maintenance.

Refer to table 9-16 for troubleshooting of the controllable landing light.

Table 9-13. Troubleshooting — Exterior Lights

CONDITION

TEST OR INSPECTION

CORRECTIVE ACTION

1. Landing lights fail to illuminate when switch is actuated.

   STEP 1. Check for open circuit breaker.

   Reset breaker or replace if required.

   STEP 2. Check for loose connections, shorted wiring, or defective switch.

   Tighten loose connections and repair or replace defective wiring or switch.

   STEP 3. Check lamps for open filament.

   Replace defective lamp.

2. Anti-collision light illuminated constantly.

   STEP 1. Check for defective flasher unit (Z10).

   Replace defective flasher unit (Z10).

Table 9-13. Troubleshooting — Exterior Lights — Continued

CONDITION

TEST OR INSPECTION

CORRECTIVE ACTION

3. Position lights fail to illuminate when switch (S68) is actuated to BRT.

STEP 1. Check for opened circuit breaker, faulty switch, shorted wiring, or loose connection.

Replace circuit breaker or switch as applicable. Repair or replace wiring or tighten loose connections.

STEP 2. Check for broken lamp filament.

Replace faulty lamp.

STEP 3. Nonessential bus switch not in manual position.

Position switch to MANUAL.

4. Position lights fail to dim or fail to burn when switch is actuated to dim position.

STEP 1. Check for defective dimming resistor (R33).

Replace dimming resistor.

Table 9-14. Troubleshooting — Exterior Lights After compliance with MWO 55-1520-228-50-32

CONDITION

TEST OR INSPECTION

CORRECTIVE ACTION

1. Anticollision light illuminated constantly.

STEP 1. Check for defective flasher unit (Z10).

Replace defective flasher unit (Z10).

2. Position lights fail to illuminate when switch (S68) is actuated to BRT.

STEP 1. Check for opened circuit breaker, faulty switch, shorted wiring, or loose connection.

Replace circuit breaker or switch as applicable. Repair or replace wiring or tighten loose connections.

Table 9-14. Troubleshooting — Exterior Lights After compliance with MWO 55-1520-228-50-32 — Continued

CONDITION / TEST OR INSPECTION	CORRECTIVE ACTION
STEP 2. Check for broken lamp filament.	**Replace faulty lamp.**
STEP 3. Nonessential bus switch not in manual position.	**Position switch to MANUAL.**
3. Position lights fail to dim or fail to burn when switch is actuated to dim position.	
STEP 1. Check for defective dimming resistor (R33).	**Replace dimming resistor.**
4. NVG position lights fail to illuminate when NVG POS LTS switch is actuated.	
STEP 1. Check for open circuit breaker, faulty switch, shorted wiring or loose connection.	**If the lights remain inoperative, replace light assembly.**

9-259. REMOVAL — LANDING LIGHTS.

a. Check that all electrical power is off.

b. Remove light access window.

c. Remove nuts, spacers, washers, and bolts attaching landing lights.

d. Disconnect electrical wiring from landing lights and cover wire ends using electrical tape (C137). Remove light.

NOTE

Replace wires L2A14(L2A12), L6A16N, L5A14(L5A12) and L7A16N, figure F-15 with wire, MIL-W-22759/5. The wire part number conforming to this specification is 140-008-12 for the power lead and 140-008-16 for the ground lead.

9-260. REPAIR — LANDING LIGHTS. Replace faulty or damaged component parts.

9-261. INSTALLATION — LANDING LIGHTS.

a. Remove tape from wire ends and connect electrical wiring to landing light.

b. Position light on mounting bracket and install attaching bolts, washers, spacers, and nuts.

c. Adjust "down shining" landing light (DS7) so that rim of light is **1.400** inches below roof of compartment. Adjust "forward shining" landing light (DS8) so that rim of light is **4.750** inches below roof of compartment.

d. Install light access window.

9-262. LANDING LIGHT RELAYS.

9-263. DESCRIPTION — LANDING LIGHT RELAYS. Two relays (K8 and K9, figure 9-1) located in the nose compartment, control illumination of landing lights and are actuated by landing light switch (S49).

9-264. INSPECTION — LANDING LIGHT RELAYS. Refer to paragraph 9-364.

9-265. REMOVAL — LANDING LIGHT RELAYS.

a. Check that all electrical power is OFF.

b. Disconnect all electrical wiring from the relay and cover wire ends using electrical tape (C137).

c. Remove screws and washers attaching relay and remove relay.

9-266. REPAIR — LANDING LIGHT RELAYS. Refer to paragraph 9-365.

9-267. INSTALLATION — LANDING LIGHT RELAYS.

a. Position landing light relay and install attaching washers and screws.

b. Remove tape from wire ends and connect all electrical wiring.

9-268. IR/WHITE (DUAL) LANDING/SEARCHLIGHT A C . After compliance with MWO 55-1520-228-50-32.

9-269. DESCRIPTION — IR/WHITE (DUAL) LANDING/SEARCHLIGHT. A dual light assembly with a white light on one side and IR light on the other side is mounted in the lower nose section of the helicopter. The circuit consists of two controllable lights; two circuit breakers located in the overhead circuit breaker panel; and two switches, located on the pilot collective stick switch box.

CAUTION

Do not illuminate light in areas of combustible material, such as tall grass, etc.

Do not illuminate IR light with light assembly fully retracted.

9-270. FUNCTIONAL TEST — IR/WHITE (DUAL) LANDING/SEARCHLIGHT.

a. Close SRCH LT CONT and SRCH LT PWR circuit breakers. Position three-way LDG LT switch to ON and check that white light illuminates. Return switch of OFF.

b. Position four-way LDG LT switch to EXT (forward position). Check that light extends and is stopped by extend limit switch at **120** degree extension.

c. Position three-way LDG LT switch to NVG position. Check that IR light illuminates. Return switch to OFF.

d. Position four-way switch to RETR (aft position). Check that light retracts.

NOTE

White light will automatically extinguish when light rotates 90 degrees right or left of center, if extended less than 60 degrees.

e. With light partially extended, position four-way switch to the left and check that light rotates to the left.

f. Position four-way switch to the right and check that light rotates to the right.

9-271. TROUBLESHOOTING — IR/WHITE (DUAL) LANDING/SEARCHLIGHT. Refer to table 9-15.

9-272. CLEANING — IR/WHITE (DUAL) LANDING/SEARCHLIGHT.

a. Remove moisture and loose dirt with a clean, soft cloth.

b. Remove dirt from electrical connectors with a bristle brush.

9-273. INSPECTION — IR/WHITE (DUAL) LANDING/SEARCHLIGHT. Visually inspect searchlight assembly and cover(s) for signs of damage or missing parts. Inspect collective head for switch operation, orientation, and missing parts. Ensure C/Bs are correctly labeled and activated.

Table 9-15. MOD, KIT, IR/WH (DUAL) LANDING/SEARCHLIGHT EGD 0967-1 TROUBLESHOOTING CHART
Troubleshooting— IR/White (Dual) Landing/Searchlight A C

FAILURE	PROBABLE CAUSE	CHECK/TEST	RESULT — ACTION
3-position switch WHITE or NVG Lamp fails to turn on	No power to light assembly	Check battery master	Switch off — Turn on.
		Check SRCH LT PWR CB	CB disabled — Activate CB
	Lamp failure (WHITE or IR)	Remove lamp wiring	Lamp does not light — Replace lamp.
		Ground lamp GND terminal	
		Apply 28 Vdc to other terminal on lamp	
	Wiring Fault	Check wiring/continuity per wiring diagram	Wiring incorrect — Correct wiring installation.
		Connect dc meter GND to terminal No. 1 (T1) and V+ to terminal No. 3 (T3)	No power to light, wiring incorrect at bus — Correct wiring installation.
	3-position switch failure (WHITE)	Connect dc meter GND to T1 and V+ to T2	No power to relay — Replace 3-position switch
	3-position switch failure (IR)	Connect dc meter GND to T1 and V+ to T8	No power to relay — Replace 3-position switch
	Lamp relay failure (WHITE)	Connect dc meter GND to T1 and V+ to T2 then T3 (28 Vdc input)	Power to both terminals (T2 & T3) — Relay failure replace light assembly
	(IR)	Connect dc meter GND to T1 and V+ to T8 then T3	Power to both terminals (T8 and T3) — Relay failure replace light assembly
3-position switch OFF lamp(s) fails to turn off	Lamp relay failure/wiring fault	Connect dc meter GND to T1, V+ to T2 (WHITE) V+ to T8 (IR)	No voltage — Relay failure, replace light assembly, 28 Vdc present-wiring fault — Correct wiring installation

Table 9-15. MOD, KIT, IR/WH (DUAL) LANDING/SEARCHLIGHT EGD 0967-1 TROUBLESHOOTING CHART
Troubleshooting— IR/White (Dual) Landing/Searchlight A A

FAILURE	PROBABLE CAUSE	CHECK/TEST	RESULT — ACTION
4-position switch — any position	No power to light assembly	Check SRCH LT CONT CB	CB disabled — Activate CB
		Connect dc meter GND to T1, V+ to T3	No voltage — Wiring incorrect at bus, correct wiring installation
	Wiring fault	Check continuity from 3-position comm. to 4-position comm. (Pin 6) (Wire L422A20)	No continuity — Correct wiring installation
4-position switch — L	Relay/motor failure	Connect dc meter GND to T1, V+ to T5	Voltage present — Replace light assembly
	4-position switch failure	Connect dc meter GND to T1, V+ to T5	No voltage present — Replace 4-position switch
4-position switch — R	Relay/motor failure	Connect dc meter GND to T1, V+ to T4	Voltage present — Replace light assembly
	4-position switch failure	Connect dc meter GND to T1, V+ to T4	No voltage present — Replace 4-position switch
4-position switch — EXT	Relay/motor failure	Connect dc meter GND to T1, V+ to T6	Voltage present — Replace light assembly
	4-position switch failure	Connect dc meter GND to T1, V+ to T6	No voltage present — Replace 4-position switch
4-position switch — RETR	Relay/motor failure	Connect dc meter GND to T1, V+ to T7	Voltage present — Replace light assembly
	4-position switch failure	Connect dc meter GND to T1, V+ to T7	No voltage present — Replace 4-position switch

9-274. REMOVAL — IR/WHITE (DUAL) LANDING/SEARCHLIGHT.

a. Be sure all electrical power is off.

b. Remove light mounting screws.

c. Lower light assembly.

d. Remove terminal cover, disconnect, and protect wires.

e. Remove light assembly.

9-275. REPAIR OR REPLACEMENT — IR/WHITE (DUAL) LANDING/SEARCHLIGHT.

a. Removal/Replacement of sealed beam lamp in non-IR part of searchlight:

b. Ensure that searchlight is in the proper (stowed) position with the white light facing outward. Ensure that the collective-mounted control switch is OFF. Pull LDG LT CONT and LDG LT PWR circuit breakers. Remove four screws securing retaining ring and remove retaining ring. Remove lamp. Label and disconnect wiring.

NOTE

Observe position of lamp before removal, and install new unit in same position with lamp key inserted in cutaway notch in canopy housing. Reassemble using reverse order of removal procedure.

c. Removal/Replacement of IR filter and sealed beam lamp in IR part of searchlight: Before disconnecting aircraft power, rotate searchlight canopy until IR filter is facing outward. Ensure that the collective-mounted searchlight control switch is OFF. Pull LDG LT CONT and LDG LT PWR circuit breakers. Remove four screws securing IR filter and remove IR filter Remove lamp.

NOTE

d. Removal/Replacement of canopy assembly:

(1) Ensure that white light is facing out in stowed position and extend light completely. Pull LANDING LT CONT and LDG LT PWR circuit breakers, and ensure that the collective-mounted searchlight control switch is OFF.

(2) Removal: Remove both the IR and white lamps (procedure above). Label the wires to IR lamp and white lamp with tape. Loosen screws holding canopy to shaft. Slide canopy off shaft. Slide wires out of canopy.

(3) Installation: Slide new canopy over shaft so that the housing for the white light will be facing outward in same position as removed white light. Line up the two setscrews with detents in the shaft. Tighten the setscrews. Check end play in the shaft using a **0.150** inch thickness gage, and reset as required. Slide wires into canopy. Reinstall lamps.

e. Removal/Replacement of IR/white searchlight assembly: Refer to paragraphs 9-274 and 9-275.

9-276. CONTROLLABLE LANDING LIGHT C.

9-277. DESCRIPTION — CONTROLLABLE LANDING LIGHT SYSTEM. Helicopters having MWO 55-1520-228-50-16 incorporated will have a controllable landing light located in the lower center section of the nose, capable of providing illumination for a full range of **360** degrees, when extended **60** degrees or more. The circuit consists of one controllable light; two circuit breakers, located in the overhead circuit breaker panel and two switches, located on the pilot collective stick switch box.

CAUTION

Do not illuminate light in areas of combustible material, such as tall grass, etc.

9-278. FUNCTIONAL TEST — CONTROLLABLE LANDING LIGHT.

a. Close landing LTPWR and landing LTCONT circuit breakers. Position landing light switch to ON and check that light illuminates. Return switch to OFF.

b. Position four-way switch to extend (forward position). Check that light extends and is stopped by extend limit switch at approximately **120** degrees extension.

c. Position four-way switch to RETR (aft position). Check that light retracts.

NOTE

Landing light must be extended at least 60 degrees before full 360 degrees travel can be achieved.

d. With light partially extended, position four-way switch to the left and check that light rotates to the left.

e. Position the four-way switch to the right and check that light rotates to the right.

f. With light extended and rotated, position switch to STOW. Check that light retracts and is stopped by the retract limit switch and then rotates to its level stowed position and stops.

9-279. TROUBLESHOOTING — CONTROLLABLE LANDING LIGHT SYSTEM. Troubleshoot the controllable landing light system in accordance with table 9-16.

NOTE

Before using table 9-16, ensure all normal operational checks have been performed. If a malfunction exists which is not listed in table 9-16, notify the next higher level of maintenance.

Table 9-16. Troubleshooting — Controllable Landing Light C

CONDITION TEST OR INSPECTION CORRECTIVE ACTION
1. Light fails to illuminate.
STEP 1. Check for open or defective landing light control or landing light power circuit breakers. Close or replace circuit breaker as required.
STEP 2. Check that light is not rotated more than approximately **90** degrees and extended less than approximately **60** degrees. **Reposition light to within these limits.**
STEP 3. Check for open lamp filament. **Replace lamp. Refer to paragraph 9-275.**
STEP 4. Check for defective switch (ON-OFF-STOW). **Replace switch.**
STEP 5. Check for open or high resistance in wiring or connection. Refer to figure F-40. **Replace or repair wiring or clean or tighten connections.**
STEP 6. Check for faulty limit switches. **Replace light assembly. Refer to paragraph 9-275.**

Table 9-16. Troubleshooting — Controllable Landing Light C — Continued

CONDITION TEST OR INSPECTION CORRECTIVE ACTION
2. Light intermittent or dim.
STEP 1. Check for faulty wiring or ground. Refer to figure F-40.
Repair as required.
3. Light fails to extend or rotate.
STEP 1. Check for open or defective landing light control or landing light power circuit breakers.
Close or replace circuit breakers as required.
STEP 2. Check for faulty switch (four-way).
Replace switch.
STEP 3. Check for faulty wiring. Refer to figure F-40.
Repair or replace as required.
STEP 4. Check for faulty light assembly.
Replace light assembly. Refer to paragraph 9-275.
4. Light fails to stow — all other functions are normal.
STEP 1. Check for faulty switch (ON-OFF-STOW).
Replace switch.
STEP 2. Check for faulty wiring. Refer to figure F-40.
Repair or replace as required.

9-280. CLEANING — CONTROLLABLE LANDING LIGHT.

a. Remove moisture and loose dirt with a clean, soft cloth.

WARNING

Isopropyl alcohol is flammable and toxic to eyes, skin, and respiratory tract. Wear protective gloves and goggles/face shield. Avoid repeated or prolonged contact. Use only in well-ventilated areas (or use approved respirator as determined by local safety/industrial hygiene personnel). Keep away from open flames, sparks or other sources of ignition.

b. Remove grease, fungus, and ground-in dirt with a clean, lint-free cloth dampened with isopropyl alcohol (C150).

c. Remove dirt from electrical connectors with a bristle brush (C31).

9-281. INSPECTION — CONTROLLABLE LANDING LIGHT.

a. Check light for defective or broken sealed beam unit.

b. Check for loose connections and damaged or defective component parts (terminal strips, limit switches, drive motors, relays, etc).

9-282. REMOVAL — CONTROLLABLE LANDING LIGHT.

a. Ensure all electrical power is OFF.

b. Remove attaching screws from light assembly mounting plate; lower light and plate.

c. Remove light mounting screws.

d. Remove terminal cover, disconnect and protect wires.

e. Remove light assembly.

9-283. REPAIR OR REPLACEMENT — CONTROLLABLE LANDING LIGHT.

a. Ensure all electrical power is off.

b. Accomplish replacement of sealed beam lamp as follows:

(1) Remove three screws from lamp retainer ring, remove ring and gasket.

(2) Lift lamp and disconnect wiring.

NOTE

Observe position of lamp before removal and install new unit in same position using reverse order of removal procedure.

c. Position light on mounting plate and secure with mounting screws.

d. Position plate and light assembly on fuselage and secure with mounting screws.

e. Check light for proper operation. Refer to paragraph 9-270.

9-284. POSITION LIGHTS.

9-285. DESCRIPTION — POSITION LIGHTS. Two lights (DS2-left and DS3-right) located on the tailboom horizontal stabilizer tips are controlled by the position lights switch (S68) and dimming resistor (R33). Refer to figure F-15 and 9-1.

9-286. DESCRIPTION — NVG POSITION LIGHTS (IR). Two forward NVG position lights mounted forward of the FM homing antenna on both sides of the aircraft, two lower NVG position lights mounted forward of the APR-39 antenna support and one aft NVG position light mounted on top of the taillight support assembly are all controlled by the NVG POS LTS switch.

9-287. CLEANING — POSITION LIGHTS.

a. Remove moisture and loose dirt with clean, soft cloth.

WARNING

Isopropyl alcohol is flammable and toxic to eyes, skin, and respiratory tract. Wear protective gloves and goggles/face shield. Avoid repeated or prolonged contact. Use only in well-ventilated areas (or use approved respirator as determined by local safety/industrial hygiene personnel). Keep away from open flames, sparks or other sources of ignition.

b. Remove grease, fungus, and ground-in dirt with a clean, lint-free cloth dampened with isopropyl alcohol (C150).

9-288. CLEANING — NVG POSITION LIGHTS. Remove moisture and loose dirt with a clean, soft cloth.

9-289. INSPECTION — POSITION LIGHTS.

a. Inspect lights for corroded lamp socket terminals.

b. Inspect for broken or shorted wires.

c. Check lights for burned out bulbs and cracked lens.

d. Inspect for improper bonding of light case to airframe.

9-290. INSPECTION — NVG POSITION LIGHTS.

a. Inspect for broken or shorted wires.

b. Check lights for cracked lens.

c. Inspection for improper bonding of light base to airframe.

9-291. TESTING — POSITION LIGHTS.

a. Place POS LTS switch to OFF. Place NON-ESS BUS switch to MANUAL. Ensure that POS LTS circuit breaker is closed.

b. Place POS LTS switch (S68) to DIM. Check that both right and left position lights and the taillight are dimly illuminated.

c. Place the POS LTS switch to BRT. Check that both side position lights and the taillight are brightly illuminated.

d. Place POS LTS switch to OFF. Check that the side position lights and the taillight are extinguished.

9-292. TESTING — NVG POSITION LIGHTS.

a. Ensure that NVG POS LTS circuit breaker is closed.

b. Rotate NVG POS LTS switch through 1, 2, 3, 4, and BRT positions. Check that IR light illumination increases with each movement.

c. Rotate NVG POS LTS switch of OFF. Check that all lights extinguish.

9-293. TROUBLESHOOTING — POSITION LIGHTS. Refer to tables 9-13 and 9-14.

9-294. TROUBLESHOOTING — NVG POSITION LIGHTS. Refer to tables 9-13 and 9-14.

9-295. REMOVAL — POSITION LIGHTS.

NOTE

Position light lens or lamps may be replaced by simply removing one light fairing attachment screw; then remove lens or lamp as necessary.

a. Check that electrical power is OFF.

b. To remove left or right position lights, remove three attaching screws and remove light from mounting. Back off coupling nut and disconnect electrical wiring from light Cover wire ends using electrical tape (C137).

9-296. REMOVAL — NVG POSITION LIGHTS.

a. Check that electrical power is OFF.

b. Remove two mount screws with washers. Remove light assembly from airframe and cut or disconnect power wire as applicable and disconnect ground wire.

c. Protect wires.

9-297. REPAIR — POSITION LIGHTS. Replace faulty or damaged components.

9-298. INSTALLATION — POSITION LIGHTS.

a. Remove tape from left or right position light wire ends.

b. Thread wires through coupling nut and connect to lights; tighten coupling nut.

c. Position light and install three attaching screws.

9-299. INSTALLATION — NVG POSITION LIGHTS.

a. Feed light wires through center access hole.

b. Splice or reconnect power and ground wires as applicable.

c. Install light with two washers and two mount screws.

d. Apply sealing compound (C130) at the light base.

9-300. TAILLIGHT.

9-301. DESCRIPTION — TAILLIGHT. Taillight (DS4) is located on aft end of tailboom. Refer to figure F-15 and 9-1.

9-302. CLEANING — TAILLIGHT. Refer to paragraph 9-287.

9-303. INSPECTION — TAILLIGHT. Refer to paragraph 9-289.

9-304. TESTING — TAILLIGHT. Refer to paragraph 9-291.

9-305. TROUBLESHOOTING — TAILLIGHT. Refer to table 9-13 and 9-14.

9-306. REMOVAL — TAILLIGHT.

a. Check that all electrical power is OFF.

b. Remove two attaching screws and remove light from shock mounting.

c. Disconnect coupling nut attaching wiring insert to light and cover insert end using electrical tape (C137).

9-307. REPAIR — TAILLIGHT. Replace faulty or damaged component parts.

9-308. INSTALLATION — TAILLIGHT.

a. Remove tape from wiring insert. Place insert in position and tighten coupling nut.

b. Position light on shock mount, install and tighten attaching screws.

9-309. ANTICOLLISION LIGHTS.

9-310. DESCRIPTION — ANTICOLLISION LIGHTS. The anticollision light circuit consists of a circuit breaker (CB8), a switch (S83), two anticollision lights (DS1, upper and DS5, lower), and a light flasher (Z10). The anticollision lights are energized from the **28** volt bus, located in the overhead console.

9-311. CLEANING — ANTICOLLISION LIGHTS. Refer to paragraph 9-287.

9-312. INSPECTION — ANTICOLLISION LIGHTS.

a. Inspect flasher case for dents or damage that would impair normal operation of unit. Inspect flasher unit for proper operation, refer to paragraph 9-313.

b. Inspect light for broken lens, cover, or open filament.

c. Inspect for broken or shorted wires or pins.

9-313. TESTING — ANTICOLLISION LIGHTS.

a. Position anticollision lights switch to OFF. Close ANTI COLL LTS circuit breaker.

b. Place anticollision lights switch to ANTICOLLISION LTS. Check that the two anticollision lights illuminate and flash alternately at a rate of **90 (±9)** flashes per minute. Replace defective components.

c. Place anticollision lights switch to OFF. Check that anticollision lights are extinguished.

9-314. TROUBLESHOOTING — ANTICOLLISION LIGHTS. Refer to figure F-15 and table 9-13 and 9-14.

9-315. REMOVAL — ANTICOLLISION LIGHTS.

a. Check that all electrical power is OFF.

b. Remove mounting screws and lift lamp assembly to gain access to wiring.

c. Disconnect electrical leads and cap ends with tape.

d. Remove light base from helicopter.

NOTE

Due to design features, components manufactured by Aeroflash Signal Corporation will not be used or mixed with another manufacturer's components in this system.

When replacing the bulb in the anticollision light, take care to avoid touching the glass portion of the bulb with bare fingers. Oil from fingers will shorten life of bulb.

9-316. REMOVAL — LIGHT FLASHER.

a. Cut wires or disconnect wrist splices, as applicable.

b. Remove mounting hardware and remove flasher.

9-317. REPAIR — ANTICOLLISION LIGHTS. Replace faulty or damaged parts.

9-318. INSTALLATION — ANTICOLLISION LIGHTS.

a. Remove tape from wires and connect wiring to lamp terminals.

b. Position lamp assembly on fairing and install mounting hardware.

9-319. INSTALLATION — LIGHT FLASHER.

a. Install the flasher assembly using six wrist locks (MS27429-1) instead of splices. Stagger the wrist locks per paragraph 14-12, TM 55-1500-325-25.

b. Install mounting hardware.

9-320. FAULT ANNUNCIATOR PANEL.

9-321. DESCRIPTION — FAULT ANNUNCIATOR PANEL. The fault annunciator panel contains a number of

internally lighted capsules that illuminate when associated switches (sensors), located at different places in the helicopter, actuate to complete circuits; thus indicating malfunctions in the systems being monitored by the sensors. The panel is energized from the **28** Vdc bus and protected by a **5** ampere circuit breaker.

9-322. CLEANING — FAULT ANNUNCIATOR PANEL. Remove loose dust or dirt from exposed surfaces, using dry, compressed air at a maximum pressure of 10 psi.

9-323. TESTING — FAULT ANNUNCIATOR PANEL. Testing should be limited to periodically pushing the test/reset switch to TEST. This results in every indicator, including the master caution indicator, lighting either bright or dim, depending on the condition to which the system was last set by the BRIGHT/DIM switch.

9-324. TROUBLESHOOTING — FAULT ANNUNCIATOR PANEL. Refer to schematic diagram (FO-3 or FO-4) and trace malfunctioning circuit or loop, using standard electronic troubleshooting procedures and standard test equipment. Localize malfunctioning components and repair or replace as required.

9-325. REMOVAL — FAULT ANNUNCIATOR PANEL.

a. Turn all electrical power OFF.

b. Disengage fasteners holding panel to mounting.

c. Lift panel and remove electrical connector plug from rear of panel.

d. Remove panel from console.

9-326. DISASSEMBLY — FAULT ANNUNCIATOR PANEL. (AVIM)

a. Remove 13 screws (1, figure 9-20), cover (2), and plate (3) to gain access to interior of unit. A

b. Remove 16 screws (21 and 29, figure 9-21), plate (4) and cover (30) to gain access to interior of unit. C

NOTE

Disassemble panel in order indexed on figure 9-20 or 9-21. Disassemble only to extent necessary to accomplish replacement of damaged parts, as determined by inspection or troubleshooting procedure.

9-327. CLEANING — FAULT ANNUNCIATOR PANEL. (AVIM)

WARNING

Use cleaning solvent in a well-ventilated area. Avoid inhaling fumes and keep solvent away from open flame.

WARNING

Isopropyl alcohol is flammable and toxic to eyes, skin, and respiratory tract. Wear protective gloves and goggles/face shield. Avoid repeated or prolonged contact. Use only in well-ventilated areas (or use approved respirator as determined by local safety/industrial hygiene personnel). Keep away from open flames, sparks or other sources of ignition.

a. Remove corrosion, dirt or other foreign matter from parts with isopropyl alcohol (C150) using a clean, lint-free cloth or a soft bristle brush.

b. Thoroughly dry all parts after cleaning with a clean, lint-free cloth or with compressed air at **10** psi.

9-328. INSPECTION — FAULT ANNUNCIATOR PANEL. (AVIM)

a. Inspect all components for security of connections and bent or broken pins, contacts, and terminals.

b. Inspect wiring and connections to all parts looking for loose connections, burned or broken wires, and insulation and proper grounding.

c. Inspect resistors for evidence of loose or broken terminals or wire leads, burned or swollen bodies, or other visual signs of damage.

d. Inspect coils for evidence of damage. If necessary, check continuity of coils with a multimeter.

e. Inspect removed fault function panel for broken leads, shorted or damaged components. Inspect relays and diodes for broken glass envelopes.

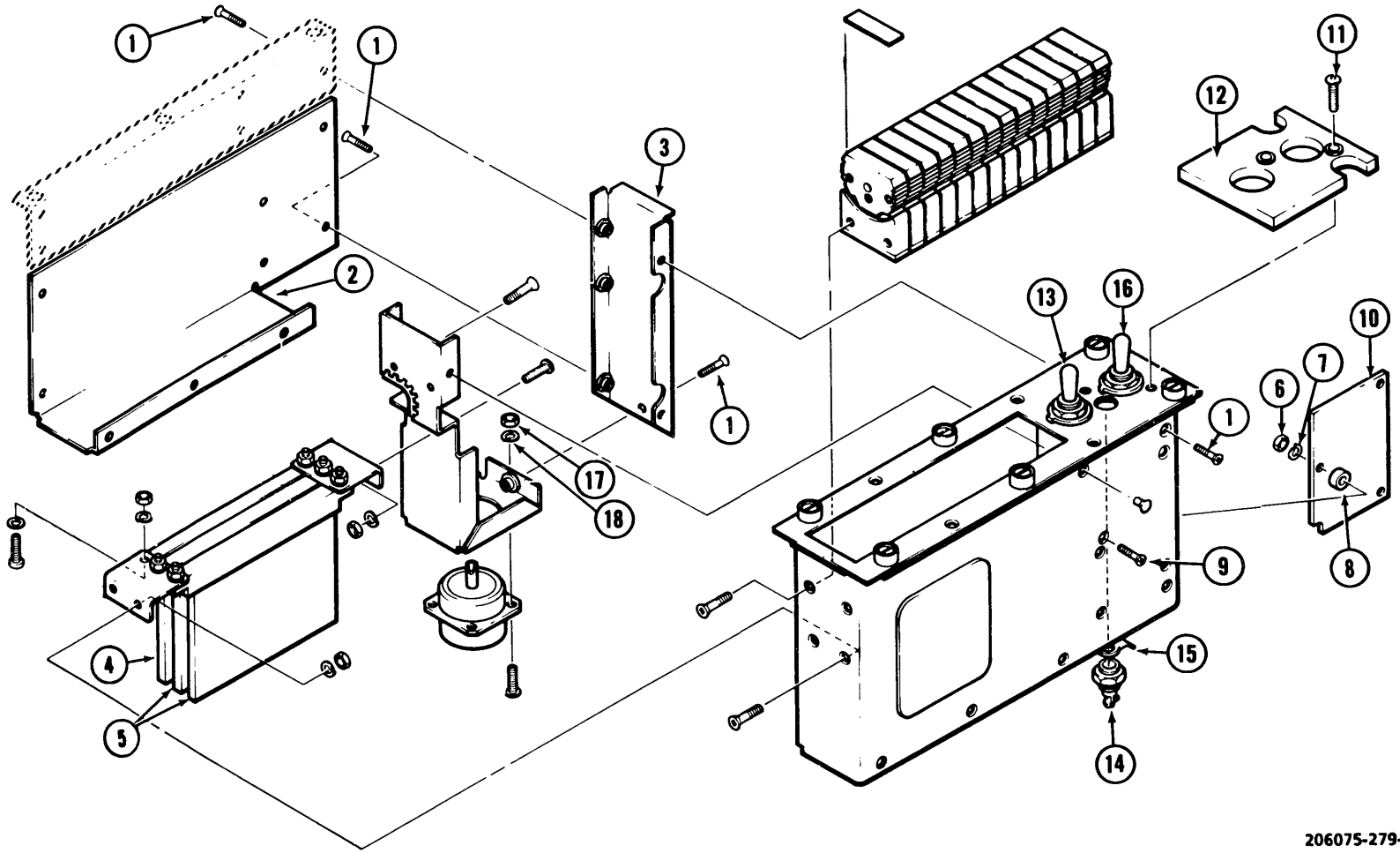

Figure 9-20. Fault Annunciator Panel A (Sheet 1 of 2)

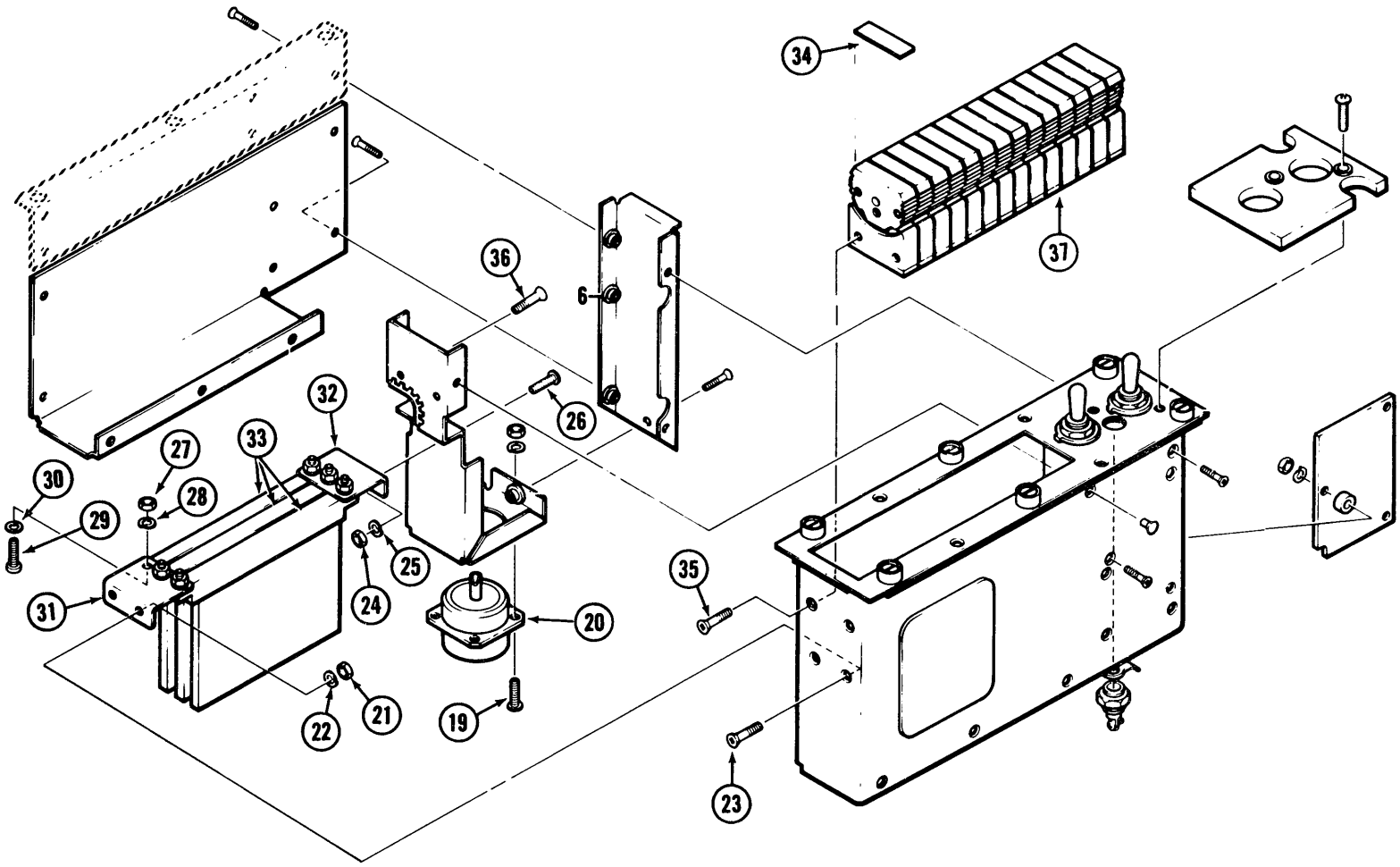

Figure 9-20. Fault Annunciator Panel A (Sheet 2 of 2)

1. Screw
2. Cover
3. Plate
4. Panel, Fault Function
5. Panel, Fault Function
6. Nut
7. Washer
8. Spacer
9. Screw
10. Panel, Fault Function
11. Screw
12. Panel, Indicating
13. Switch
14. Connector
15. Terminal
16. Switch
17. Nut
18. Washer
19. Screw
20. Connector
21. Nut
22. Washer
23. Screw
24. Nut
25. Washer
26. Screw
27. Nut
28. Washer
29. Screw
30. Washer
31. Bracket
32. Bracket
33. Connector
34. Lens
35. Screw
36. Screw
37. Indicator Assembly

206075-279-2

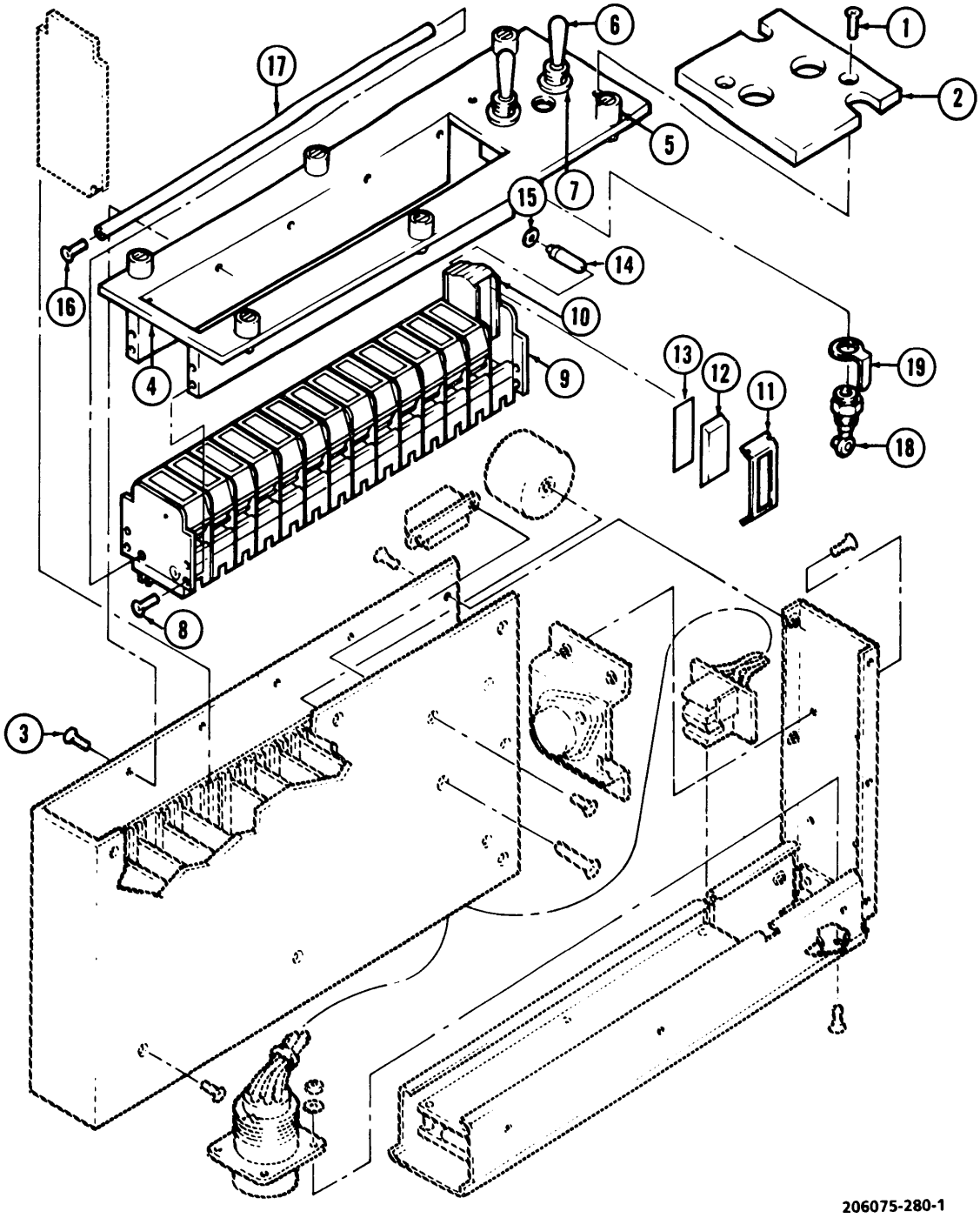

Figure 9-21. Fault Annunciator Panel C (Sheet 1 of 2)

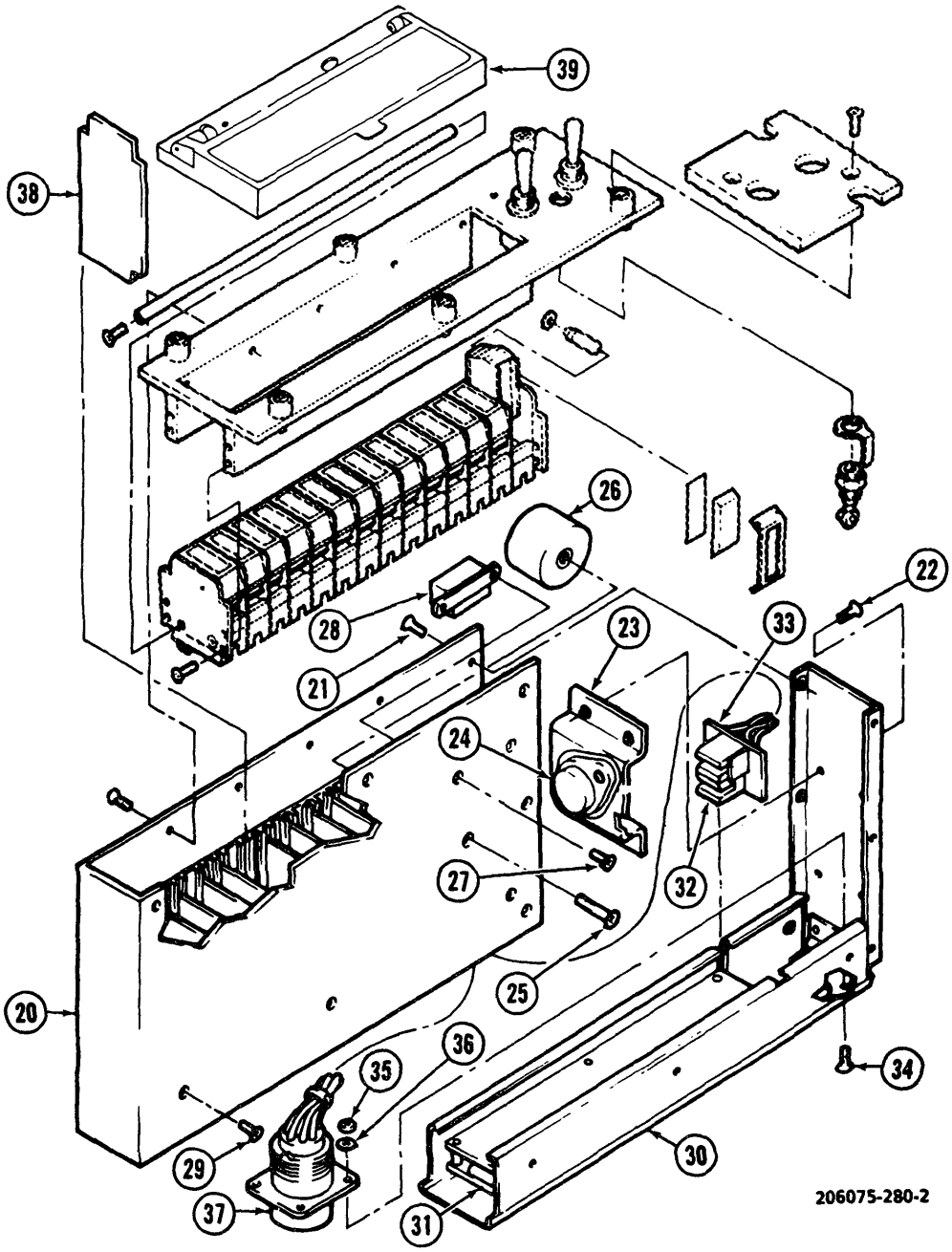

1.	Screw	11.	Lens Retainer	21.	Screw	31.	PC Board Assembly
2.	Panel Indicating	12.	Filter	22.	Screw	32.	Connector
3.	Screw	13.	Filter	23.	Bracket	33.	PC Board
4.	Plate	14.	Bulb	24.	Diode	34.	Screw
5.	Nut, Clinch	15.	Spring	25.	Screw	35.	Nut
6.	Switch	16.	Screw	26.	Choke	36.	Washer
7.	Nut	17.	Rod	27.	Screw	37.	Connector
8.	Screw	18.	Connector Assembly	28.	Relay	38.	PC Board
9.	Base Assembly	19.	Terminal	29.	Screw	39.	Flip Filter
10.	Reflector Assembly	20.	Housing Assembly	30.	Cover		

Figure 9-21. Fault Annunciator Panel C (Sheet 2 of 2)

9-329. REPAIR — FAULT ANNUNCIATOR PANEL. (AVIM)

a. Repair of the fault annunciator panel is limited to minor repairs, such as soldering loose connections and straightening bent connector pins, Damaged or malfunctioning electronic parts shall be replaced with no attempt at repair of such items.

NOTE

In each case, replace components in the exact location from which the replaced part was removed.

b. Replace lamps in indicators of the rototellite assembly by rotating the indicator to reach the lamps in base of the unit. Lamps are held in place by spring clips.

9-330. REASSEMBLY — FAULT ANNUNCIATOR PANEL. (AVIM)

a. Reassemble panel by installing plate (3) and cover (2) using 13 screws (1). Refer to figure 9-20. **A**

b. Reassemble panel by installing plate (4) and cover (30) using 16 screws (21 and 29). Refer to figure 9-21. **C**

NOTE

Refer to schematic diagram, O-3 or O-4 when installing new electronic components or wiring. If new parts are installed trim excess wire leads after soldering. Install all attaching hardware in same position and location from which removed.

9-331. INSTALLATION — FAULT ANNUNCIATOR PANEL.

a. Connect electrical plug to rear of panel.

b. Position panel in console.

c. Engage fasteners securing panel to console.

SECTION VI MISCELLANEOUS EQUIPMENT.

9-332. MISCELLANEOUS EQUIPMENT.

9-333. DESCRIPTION — MISCELLANEOUS EQUIPMENT. Miscellaneous equipment covered in this section includes the defogging blower system, bleed air heater system, pitot heater system, auxiliary power receptacle, armament electrical system, common electrical components, and control panels.

9-334. DEFOGGING BLOWER SYSTEM.

9-335. DESCRIPTION — DEFOGGING BLOWER SYSTEM. This system provides air circulation directed on the left and right windshields to dissipate any condensation formation on the windshields, and consists of: right blower motor (B7), left blower motor (B8), wired in parallel and energized by the DEFOG & VENT circuit breaker (CB5). The system is fed from the **28** Vdc bus in the overhead console.

9-336. TESTING — DEFOGGING BLOWER SYSTEM. Testing the defogging blower system consists of performing operational checks of blower motors (B7 and B8). For testing refer to paragraph 9-341.

9-337. TROUBLESHOOTING — DEFOGGING BLOWER SYSTEM. Troubleshoot the defogging blower system in accordance with table 9-17.

NOTE

Before using table 9-17, ensure all normal operational checks have been performed. If a malfunction exists which is not listed in table 9-17, notify the next higher level of maintenance.

Table 9-17. Troubleshooting — Defogging Blower System

CONDITION / TEST OR INSPECTION	CORRECTION ACTION
1. Blowers fail to operate when DEFOG & VENT switch breaker is positioned to ON.	
STEP 1. Check for defective switch, loose connections, or shorted wiring.	**Repair or replace wiring, tighten loose connections or replace defective switch.**
STEP 2. Check for defective blower motor.	**Replace defective blower.**
2. Circuit breaker opens when blower is energized.	
STEP 1. Check for shorted wiring or blower motor.	**Repair wiring or replace blower.**
STEP 2. Check for overloaded blower motor caused by binding blower fan.	**Reposition blower to correct binding and ensure that fan operates freely.**

9-338. DEFOGGING BLOWER MOTORS (B7 AND B8).

9-339. DESCRIPTION — DEFOGGING BLOWER MOTORS (B7 AND B8). The blower motors provide circulation of air through vents to the right and left windshields to dissipate any moisture formation.

9-340. INSPECTION — DEFOGGING BLOWER MOTORS (B7 AND B8). Inspect the blower motor for cracked mounting flange.

9-341. TESTING — DEFOGGING BLOWER MOTORS (B7 AND B8).

a. To determine that the blower motors operate, perform the following steps:

(1) Ensure that GEN and BUS RESET circuit breakers are depressed (closed).

(2) Position NON-ESS BUS switch to MAN.

(3) Position DEFOG & VENT switch breaker to ON.

(4) Determine that both blower motors are operating.

b. Position DEFOG & VENT switch breaker to OFF. Check that both blower motors stop operating.

9-342. TROUBLESHOOTING — DEFOGGING BLOWER MOTORS (B7 AND B8). Troubleshoot blower motors in accordance with table 9-17.

9-343. REMOVAL — DEFOGGING BLOWER MOTORS (B7 AND B8).

a. Unsolder electrical wire from noise filter (4, figure 9-22).

b. Remove screws attaching noise filter (4) to structure.

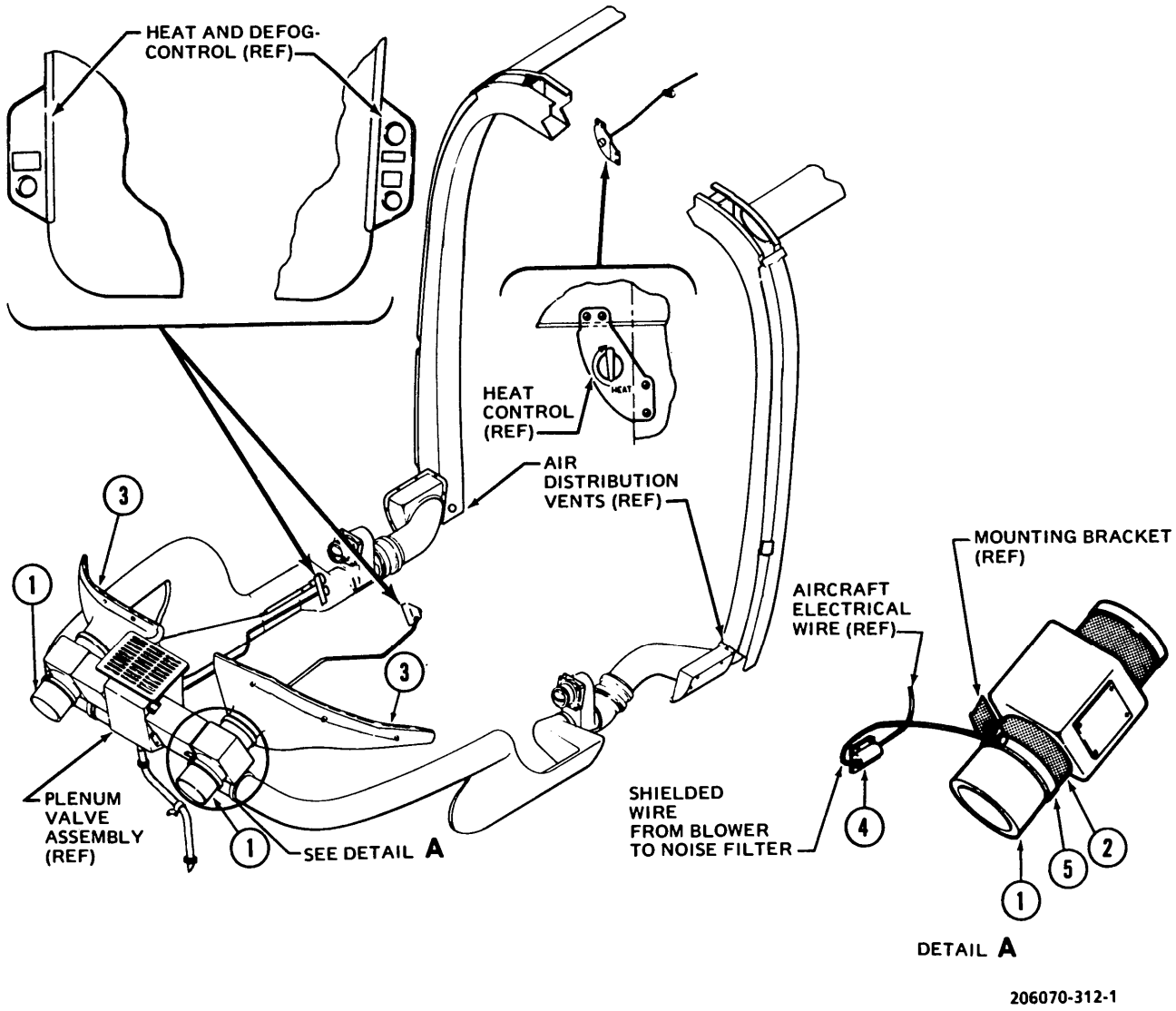

1. Defogging Blower (B7 and B8)
2. Air Duct
3. Windshield Defog Nozzle
4. Noise Filter
5. Clamp

Figure 9-22. Defogging Blower Motors (B7 and B8) A (Sheet 1 of 2)

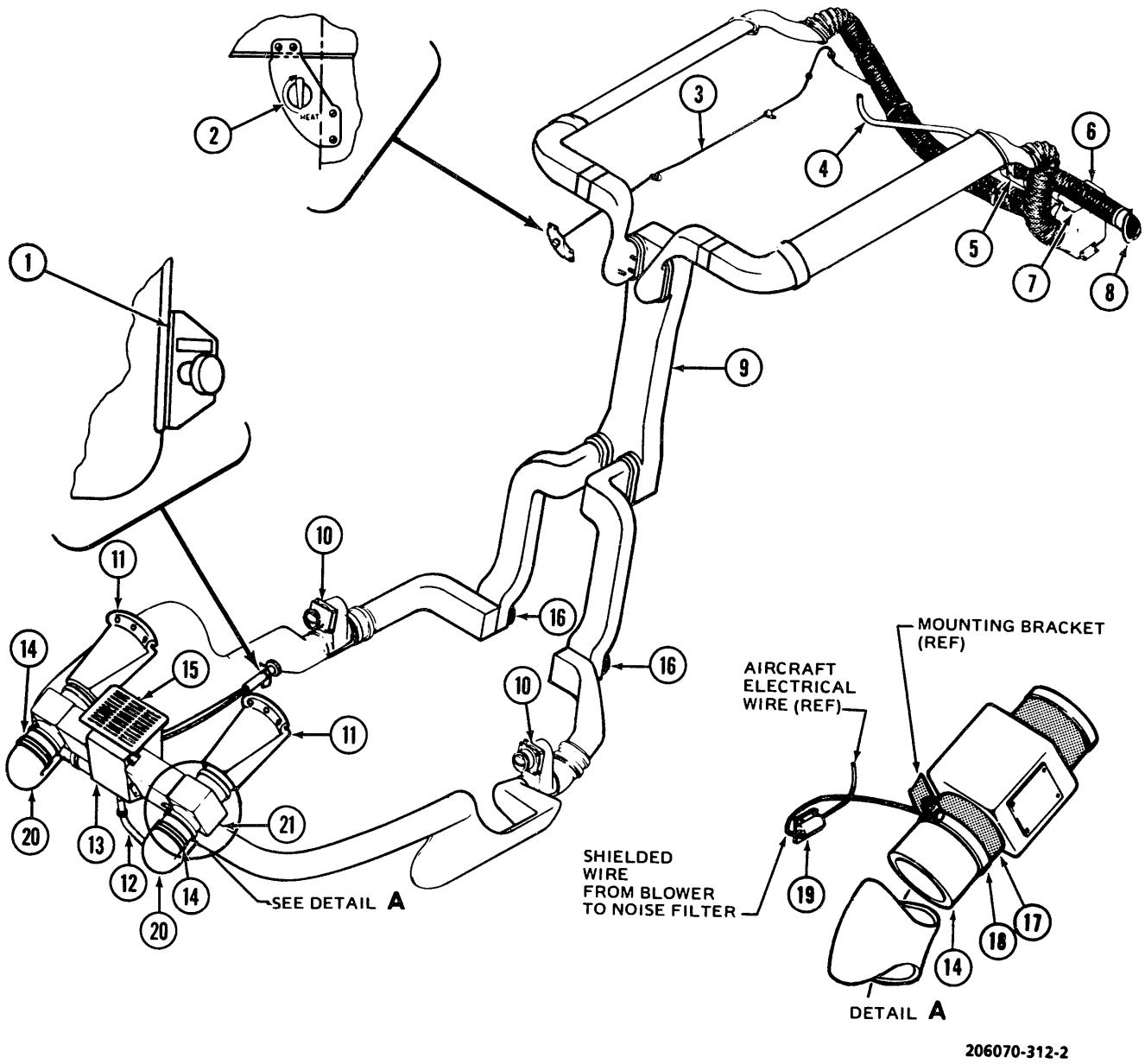

1. Vent Control
2. Heat Control
3. Heat Control Cable
4. Bleed Air Tube
5. Mixing Valve
6. Plenum
7. Remote Sensor
8. Fresh Air Inlet
9. Center Post Duct
10. Air Distribution Valves
11. Windshield Defog Nozzle
12. Plenum Drain
13. Plenum Valve Assembly
14. Ventilating and Defogging Blower
15. Ram Air Intake Grill
16. Air Distribution Valves Cargo/ Passenger Area
17. Coupling
18. Clamp
19. Noise Filter
20. Blower Inlet Duct
21. Tee Valve

Figure 9-22. Defogging Blower Motors (B7 and B8) A (Sheet 2 of 2)

c. Remove screw, washer, nut, and clamp (5) attaching blower (1) and duct (2).

d. Remove blower (1) from duct (2).

9-344. REPAIR OR REPLACEMENT — DEFOGGING BLOWER MOTORS (B7 AND B8). Replace the blower motor if it does not meet requirements of test procedure.

9-345. INSTALLATION — DEFOGGING BLOWER MOTORS (B7 AND B8).

a. Partially insert blower (1, figure 9-22) in air duct (2).

b. Position clamp (5) on duct (2) and blower (1). Attach clamp (5) to mounting provision on structure with screw, washer, and nut.

c. Install noise filter (4) on nose structure with four screws, washers, and nuts.

NOTE

Ensure a good electrical bond is made between case of noise filter (4) and bare structure.

d. Using solder (C133) solder wire to noise filter (4).

9-346. BLEED AIR HEATER SYSTEM.

9-347. DESCRIPTION — BLEED AIR HEATER SYSTEM. The electrical portion of the bleed air heater system consists of heater solenoid (L2), heater relay (K15), heater overheat switch (S90) and associated wiring The system is energized from and protected by a **5** ampere HTR switch breaker located in the overhead console, which energizes heater solenoid (L2) through heater relay (K15). Should an overheat condition occur (S90) closes to actuate (K15) thus breaking circuit to (L2).

9-348. INSPECTION — BLEED AIR HEATER SYSTEM. Inspect the bleed air heater system in accordance with paragraph 13-3.

9-349. TESTING — BLEED AIR HEATER SYSTEM.

a. Place NON-ESS BUS switch to NORM. Place heater switch breaker to HTR. Check that the cabin bleed-air inlet vent opens.

b. Place a jumper wire from X1 of the heater relay to helicopter structure. Check that the cabin bleed-air inlet vent closes.

c. Remove the jumper wire installed in step b. Check that bleed-air inlet vent opens.

d. Place HTR switch breaker to OFF. Check that the cabin bleed-air vent closes.

NOTE

For additional information on bleed air heater system refer to Chapter 13.

9-350. TROUBLESHOOTING — BLEED AIR HEATER SYSTEM. Troubleshooting the bleed air heater system in accordance with table 13-1.

9-351. REMOVAL — BLEED AIR HEATER SYSTEM. Remove bleed air heater system components in accordance with procedures provided in Chapter 13.

9-352. REPAIR OR REPLACEMENT — BLEED AIR HEATER SYSTEM. Repair bleed air heater system components in accordance with procedures provided in Chapter 13.

9-353. INSTALLATION — BLEED AIR HEATER SYSTEM. Install bleed air heater system components in accordance with procedures provided in Chapter 13.

9-354. PITOT HEATER SYSTEM.

9-355. DESCRIPTION — PITOT HEATER SYSTEM. The pitot heating system consists of a pitot tube heater (HR1), located in the nose section. The pitot heating system is energized from and protected by a **5** ampere PITOT HTR switch breaker, located in the overhead console.

9-356. INSPECTION — PITOT HEATER SYSTEM. Inspect the pitot heater system in accordance with paragraph 8-159.

9-357. TESTING — PITOT HEATER SYSTEM.

a. Place PITOT HTR switch breaker to PITOT HTR. Check that pitot tube heater begins to heat.

WARNING

Pitot tube heats rapidly. Use extreme care when checking operation to avoid serious burns.

b. Place PITOT HTR switch breaker to OFF. Check that pitot heater stops heating.

9-358. TROUBLESHOOTING — PITOT HEATER SYSTEM. To troubleshoot the pitot heater system refer to figure F-10. Use standard procedures to troubleshoot the simple circuit.

9-359. REMOVAL — PITOT HEATER SYSTEM. Remove the pitot heater system in accordance with paragraph 8-160.

9-360. REPAIR OR REPLACEMENT — PITOT HEATER SYSTEM. Repair the pitot heater system in accordance with paragraph 8-161.

9-361. INSTALLATION — PITOT HEATER SYSTEM. Install the pitot heater system in accordance with paragraph 8-162.

9-362. COMMON ELECTRICAL COMPONENTS.

9-363. DESCRIPTION — COMMON ELECTRICAL COMPONENTS. Included in the category of common electrical components are relays, rheostats, switches, circuit breakers, plugs, leads, connectors, wiring, conduits, receptacles, shunts, and shock mounts.

9-364. INSPECTION — COMMON ELECTRICAL COMPONENTS.

a. Inspect rheostats for security, corrosion, burned element, damaged wiper, cracks, and correct resistance.

b. Inspect switches for weak detents, security, corrosion, continuity in ON and OFF position.

c. Inspect circuit breakers for security, corrosion, actuation for circuit power on and power off and reset retentions.

d. Inspect connectors, plugs, and receptacles for security, contact corrosion, damaged contacts, broken wires, faulty contacts, insert cracks, and faulty insulation.

e. Inspect leads and wiring for loose terminals, chafing, corrosion or deteriorated conditions, faulty or damaged insulation, excessive mechanical stress, broken strands, damaged shielding, routing, and mounting condition.

f. Inspect conduits for security, surface damage, cracks, corrosion, and deterioration.

g. Inspect ammeter shunt for corrosion, security, deep scratches, physical damage, and discoloration.

h. Inspect shock mounts for retention, security, cracks, distortion, corrosion, and bonding.

i. Inspect relays for loose connections, damaged or broken contact pins or terminals, physical damage to case or insulation between contact pins, and discoloration that would indicate internal shorting or excessive overload.

NOTE

Clean corrosion from connectors and contacts with cleaner (C151). Use sparingly and keep away from cable assemblies and insulation.

9-365. REPAIR OR REPLACEMENT — COMMON ELECTRICAL COMPONENTS.

a. Tighten loose terminal connectors, mounting, and attachment of electrical components.

b. Replace miscellaneous electrical components that fail to meet inspection requirements.

9-366. REMOVAL — COMMON ELECTRICAL COMPONENTS.

a. Gain access to applicable components.

WARNING

Before attempting to remove or adjust any electrical component, disconnect battery.

b. Disconnect wiring to component and cover wire ends using electrical tape (C137).

c. Remove attaching hardware and remove component.

9-367. INSTALLATION — COMMON ELECTRICAL COMPONENTS.

a. Install component and secure with attaching hardware or clamps.

b. Remove cover from wire ends and connect wiring.

c. Install any access panel, sound proofing, or covers removed for access.

9-368. AUXILIARY POWER RECEPTACLE (J120).

9-369. DESCRIPTION — AUXILIARY POWER RECEPTACLE (J120). The auxiliary receptacle (J120) is mounted on a bulkhead aft and inboard of the pilot seat and provides power take off of 28 VDC to operate miscellaneous auxiliary equipment. The circuit is powered from 28 Vdc essential bus and protected by a 10 ampere AUX RECP switch breaker (CB11) in the overhead console. Refer to figure 9-1.

9-370. INSPECTION — AUXILIARY POWER RECEPTACLE (J120). Inspect the auxiliary power receptacle for condition and security.

9-371. TESTING — AUXILIARY POWER RECEPTACLE (J120).

a. Connect and energize external power source.

b. Close circuit breaker switch AUX RECP.

c. Prepare standard voltmeter to measure dc voltage. Place voltmeter lead on receptacle pin A, place the return lead on receptacle pin B.

d. The voltmeter shall indicate **28 (±1)** Vdc.

9-372. TROUBLESHOOTING — AUXILIARY POWER RECEPTACLE (J120). To troubleshoot the auxiliary power receptacle circuit, use a standard volt-ohmmeter to troubleshoot the simple circuit.

9-373. REMOVE — AUXILIARY POWER RECEPTACLE (J120). To remove the power receptacle, refer to paragraph 9-366.

9-374. REPAIR OR REPLACEMENT — AUXILIARY POWER RECEPTACLE (J120). To repair the power receptacle, refer to paragraph 9-365.

9-375. INSTALLATION — AUXILIARY POWER RECEPTACLE (J120). To install the power receptacle, refer to paragraph 9-367.

9-376. ARMAMENT ELECTRICAL SYSTEM — AIRFRAME. A

9-377. DESCRIPTION — ARMAMENT ELECTRICAL SYSTEM. The armament electrical system consists of the following components.

a. Control panel located in instrument panel

b. Firewall disconnect (gun) with dust cover

c. Armament control panel disconnect (P301) located in upper portion of pedestal

d. Terminal junction (TB4) located in right side of lower console

e. Part of impedance pad network located forward of instrument panel in console

f. Part of junction terminals (TB1 and TB6) located in console adjacent to impedance pad network.

9-378. INSPECTION — ARMAMENT ELECTRICAL SYSTEM. Inspect armament electrical system components in accordance with paragraph 9-364.

9-379. TESTING — ARMAMENT ELECTRICAL SYSTEM (ARMAMENT CONTROL CIRCUITRY).

WARNING

Test procedures in the following steps require the use of live ammunition. Take adequate precautionary measures according to Army regulations before performing the following tests.

a. Pull out (open) ARMT PWR and ARMT circuit breakers.

b. On armament control panel, position switches as follows:

(1) ARMED/SAFE to SAFE

(2) MASTER to OFF.

c. Adjust instrument and console panel light controls for dim light conditions (rheostats ccw).

d. Install jumper wires in the armament control circuitry as follows:

(1) Install a jumper wire between pins C and L, of turret connector (J300).

(2) Install a jumper wire between pins M and H, of turret connector (J300).

(3) Install a jumper wire from the helicopter structure (ground) to pins D and E, of turret connector (J300).

e. Energize the essential dc bus.

NOTE

Use a standard voltmeter to perform voltage measurements in the following steps.

f. Perform the following armament control circuitry tests.

(1) Close ARMT PWR circuit breaker.

(2) Measure 28 Vdc at pin A, turret connector (J300).

3) (Open ARMT PWR circuit breaker.

(4) Close ARMT PWR circuit breaker and measure 28 Vdc at pin M of turret connector.

NOTE

Determine that voltage is not present at pin F or at pin T of turret connector.

(5) On armament panel, observe that only the GUN NOT CLEARED caution lamp is brightly illuminated.

NOTE

All other indicator lamps on the armament panel are out (not lighted).

(6) On armament panel, position MASTER switch to FIRE TO CLEAR.

(7) Observe the following lighting conditions.

(a) GUN NOT CLEARED caution light remains brightly illuminated.

(b) AMMO LOW caution light illuminates brightly.

(8) Measure 28 Vdc at pins J and F of turret connector.

NOTE

Determine that voltage is not present at pin T of the turret connector.

(9) Position ARMED/SAFE switch to ARMED.

(10) Observe the following lighting condition.

(a) ARMED caution lamp illuminates brightly.

(b) GUN NOT CLEARED and AMMO LOW caution lamps remain brightly illuminated.

(11) Depress and hold trigger switch on pilot cyclic stick to the first position. Check that 28 Vdc is present on pin K of turret connector.

(12) Depress and hold trigger switch on pilot cyclic stick to the second position. Check that 28 Vdc is present at pin N of turret connector.

(13) Release trigger switch. Check that there is no voltage present on pin K or pin N of the turret connector.

(14) Repeat steps (11), (12), and (13) except depress the trigger switch on the copilot cyclic stick.

(15) Place and hold gun elevation switch on pilot cyclic stick to extreme downward position. Check that 28 Vdc is present on pin R of the turret connector.

(16) Place and hold pilot gun elevation switch to extreme upward position. Check that 28 Vdc is present on pin P of the turret connector.

(17) Repeat steps (15) and (16) using the copilot gun elevation switch.

(18) Position MASTER switch to FIRE NORM.

(19) Observe that GUN NOT CLEARED and AMMO LOW indicator lights remain brightly illuminated.

(20) Measure 28 Vdc at pin J and pin T of the turret connector.

NOTE

Determine that voltage is not present at pin F.

(21) Rotate the instrument lights control slightly clockwise from DIM. Check that armament lights in step (19) are dimly illuminated.

(22) Depress the WARNING LTS TEST switch. Check that armament lights listed in step (19) return to the bright condition. Release test switch and check that armament lights return to the dim condition.

(23) Rotate the instrument lights control counterclockwise to DIM. Check that the armament lights listed in step (19) are brightly illuminated.

(24) Rotate the console lights control slightly clockwise. Check that the armament control panel edge lights are dimly illuminated.

(25) Continue clockwise rotation of the console lights control. Check that armament control panel edge lights increase in brightness with clockwise rotation on the control and are brightest at clockwise extreme (BRT).

(26) Rotate console lights control in a counterclockwise direction. Check that armament control panel edge lights decrease in brightness as control is rotated counterclockwise and are extinguished as control is rotated to its DIM position.

(27) Open ARMT circuit breaker.

(28) Remove the jumper wires from pins D and E of turret connector.

(29) Position ARMED/SAFE switch to SAFE.

(30) Close ARMT circuit breaker.

(31) Observe that GUN NOT CLEARED, ARMED, and AMMO LOW indicator lights are not lighted.

(32) Depress WARNING LTS TEST switch. GUN NOT CLEARED, ARMED, and AMMO LOW indicator lights will illuminate brightly.

(33) Release WARNING LTS TEST switch. Armament lights listed in step (32) above will extinguish.

g. Open all circuit breakers.

h. Remove all test jumper wires installed on turret connector.

i. Check that all switches are in off or normal positions.

9-380. TROUBLESHOOTING — ARMAMENT ELECTRICAL SYSTEM. A Refer to table 9-18.

WARNING

In the following troubleshooting chart items 1 through 25 are to be performed without ammunition present in the gun, delinking feeder, ammunition chutes, or container.

NOTE

The following steps are to be observed when troubleshooting the armament electrical system.

a. Gun operation (dry firing) shall be held to a minimum to avoid damaging firing pins. The gun safing sector must be installed to prevent gun jamming and damage to bolt assemblies.

b. AMMO LOW light will remain illuminated without ammunition and with no malfunctions in its circuitry.

c. Press reset button on control box to extinguish GUN NOT CLEARED light after items 26 and 27.

NOTE

Before using table 9-18, ensure all normal operational checks have been performed. If a malfunction exists which is not listed in this table, notify the next higher level of maintenance.

9-381. REMOVAL — ARMAMENT ELECTRICAL SYSTEM. Remove armament electrical system components in accordance with paragraph 9-366.

9-382. REPAIR OR REPLACEMENT — ARMAMENT ELECTRICAL SYSTEM. Repair armament electrical system components in accordance with paragraph 9-365.

Table 9-18. Troubleshooting — Armament Electrical System A

CONDITION / TEST OR INSPECTION	CORRECTIVE ACTION
1. ARMED, GUN NOT CLEAR, and AMMO LOW lights do not illuminate when PRESS TO TEST switch is depressed.	
STEP 1. Check for defective switch, shorted wiring, or loose connections.	**Repair or replace defective wiring, replace switch, or tighten loose connections.**
2. Only the AMMO LOW light does not illuminate when PRESS TO TEST switch is depressed.	
STEP 1. Check for defective lamp (open filament) or defective diode (CR24 or CR603).	**Replace defective lamp or diode.**
STEP 2. Check for defective wiring or loose connections.	**Repair or replace wiring. Tighten loose connection.**
3. Only the ARMED light does not illuminate when PRESS TO TEST switch is depressed.	
STEP 1. Check for defective lamp, shorted wiring, or loose connections.	**Replace defective lamp, repair or replace wiring, and tighten loose connections.**

Table 9-18. Troubleshooting — Armament Electrical System A — Continued

CONDITION

TEST OR INSPECTION

CORRECTIVE ACTION

4. Only the GUN NOT CLEARED light does not illuminate when the PRESS TO TEST switch is depressed.

STEP 1. Check for defective lamp, shorted wiring, or loose connections.

Replace defective lamp, repair or replace wiring, and tighten loose connections.

STEP 2. Check for defective ARM circuit breaker or diode (CR602).

Replace defective circuit breaker or diode.

5. ARMED light illuminates with MASTER switch in FIRE TO CLEAR and ARM/SAFE in SAFE position.

STEP 1. Check for defective ARM/SAFE switch or diode (CR24).

Replace defective switch or diode.

STEP 2. Check for defective wiring or loose connections.

Tighten connections and repair or replace wiring.

6. ARMED light does not illuminate with MASTER switch in FIRE TO CLEAR and ARM/SAFE in ARM position.

STEP 1. Check for defective MASTER switch or ARM/SAFE switch.

Replace defective switch.

STEP 2. Check for defective diode (CR604) or series resistor (R611).

Replace defective diode.

STEP 3. Check for shorted wiring or loose connections.

Repair or replace wiring or tighten connections.

7. With controls positioned as in 6, ARMED light only illuminates when dimming switch is positioned for maximum brightness.

STEP 1. Check for defective series resistor (R611) or wiring.

Replace resistor or repair or replace wiring.

Table 9-18. Troubleshooting — Armament Electrical System A — Continued

CONDITION

TEST OR INSPECTION

CORRECTIVE ACTION

8. ARMED light will not reach maximum brightness with controls positioned as in 6.

STEP 1. Check for defective dimming switch (S19) or relay (K602).

Replace defective switch or relay.

STEP 2. Check for defective lamp (open filament) or defective wiring.

Repair or replace wiring or replace lamp.

9. AMMO LOW lamp does not illuminate with ARM/SAFE switch in SAFE and MASTER switch in FIRE TO CLEAR position.

STEP 1. Check for defective AMMO LOW or MASTER switch or for shorted wiring or loose connections.

Replace defective switch, repair or replace wiring, or tighten loose connections.

STEP 2. Check for defective diode (CR601 or CR23) or series resistor (R609).

Replace defective diode or resistor.

10. With controls positioned as in 9., AMMO LOW light only illuminated with dimming switch set for maximum brightness.

STEP 1. Check for defective series resistor (R609) or shorted wiring.

Replace defective resistor or repair or replace wiring.

11. With controls positioned as in 9., AMMO LOW light does not attain maximum brightness.

STEP 1. Check for defective dimming switch (S19) or relay (K601).

Replace defective switch or relay.

STEP 2. Check for defective lamp, shorted wiring or loose connection.

Replace defective lamp, tighten loose connection, or repair or replace wiring.

Table 9-18. Troubleshooting — Armament Electrical System A — Continued

CONDITION

TEST OR INSPECTION

CORRECTIVE ACTION

12. GUN NOT CLEARED light illuminates with MASTER switch in FIRE TO CLEAR and ARM/SAFE switch in ARM position.

STEP 1. Defective control box logic circuit or wiring.

Replace control box or repair or replace wiring.

13. With controls positioned as in 12, GUN NOT CLEARED light does not illuminate when trigger is depressed.

STEP 1. Check for defective series resistor (R610).

Replace resistor.

STEP 2. Check for defective control box logic circuit or burst control time delay relay (M2).

Replace control box.

STEP 3. Check pilot and copilot trigger (S101 or S109).

Replace defective trigger.

STEP 4. Defective lamp or wiring.

Replace lamp or repair or replace wiring.

14. With controls positioned as in 12. and trigger depressed, GUN NOT CLEARED light will not attain maximum brightness.

STEP 1. Check for defective dimming switch (S19) or relay (K601).

Replace defective switch or relay.

STEP 2. Check for defective lamp or wiring.

Replace lamp or repair or replace wiring.

15. With MASTER switch in FIRE TO CLEAR and ARM/SAFE switch in ARM position, gun will not rotate when trigger is depressed.

STEP 1. Check gun to see if it is mechanically jammed.

Clear jam.

Table 9-18. Troubleshooting — Armament Electrical System A — Continued

CONDITION

TEST OR INSPECTION

CORRECTIVE ACTION

STEP 2. Check for defective ARM PWR circuit breaker.

Reset or replace breaker.

STEP 3. Check for defective control box (K1 or K2).

Replace control box.

STEP 4. Check for defective speed control unit (CR2, SCR1, SCR2).

Replace defective speed control unit.

STEP 5. Check for defective trigger, shorted wiring, or loose connections.

Replace trigger or repair or replace wiring. Tighten loose connections.

16. With controls positioned as in 15., gun rotates at slow rate but rotation will not change to fast rate.

STEP 1. Check for defective speed control unit, shorted wiring, or loose connection.

Replace speed control unit, tighten loose connection, or repair or replace wiring.

17. With controls positioned as in 15., gun rotates for excessive time after trigger release during fire to clear.

STEP 1. Check for defective control box clearing time relay (M1).

Replace control box.

18. Gun elevation motor inoperative for any setting of ELEVATE/DEPRESS switches.

STEP 1. Check for defective motor, loose connections, or shorted wiring.

Replace motor, tighten loose connection or repair or replace wiring.

19. Gun elevation motor responds with ELEVATE/DEPRESS switches in UP only.

STEP 1. Check for defective depress relay (K2).

Replace defective relay.

STEP 2. Check for shorted wiring, loose connections, or defective elevation motor.

Repair or replace wiring, tighten connections or replace motor.

Table 9-18. Troubleshooting — Armament Electrical System A — Continued

CONDITION

TEST OR INSPECTION

CORRECTIVE ACTION

20. Gun elevation motor responds with ELEVATE/DEPRESS switches in DOWN only.

STEP 1. Check for defective elevate relay (K3).

Replace relay.

STEP 2. Check for defective wiring, loose connections, or defective motor.

Repair or replace wiring, tighten connections, or replace motor.

21. Gun elevation responds to pilot switch only.

STEP 1. Check copilot switch and wiring.

Replace defective switch and repair or replace wiring.

22. Gun elevation responds to copilot switch only.

STEP 1. Check pilot switch and wiring.

Replace defective switch and repair or replace wiring.

23. Gun sight light does not illuminate with MASTER switch in FIRE TO CLEAR or for any position of filament selector switch.

STEP 1. Check for defective INTENSITY CONTROL.

Replace INTENSITY CONTROL.

STEP 2. Check for defective FILAMENT SELECTOR switch.

Replace FILAMENT SELECTOR switch.

STEP 3. Check lamp filaments and wiring.

Replace lamp and repair or replace wiring.

24. Sight will not attain maximum intensity.

STEP 1. Check for defective INTENSITY CONTROL.

Replace INTENSITY CONTROL.

Table 9-18. Troubleshooting — Armament Electrical System A — Continued

CONDITION

TEST OR INSPECTION

CORRECTIVE ACTION

STEP 2. Check for shorted wiring or loose connections.

Repair or replace wiring. Tighten connections.

25. Gun sight illuminates with FILAMENT SELECTOR in one position only.

STEP 1. Check for open filament in lamp.

Replace defective lamp.

WARNING

Troubleshooting of 26 and 27 requires use of live ammunition. Observe all safety precautions required by Army regulations prior to performing these steps.

26. Gun ejects live ammunition.

STEP 1. Check for defective gun feed solenoid.

Replace solenoid.

STEP 2. Check for defective control box.

Replace control box.

STEP 3. Check for defective trigger.

Replace applicable trigger.

STEP 4. Check all wiring for shorts, condition, or loose connections.

Repair or replace defective wiring.

27. GUN NOT CLEARED light remains illuminated after firing to clear.

STEP 1. Check that less than seven live rounds ejected.

Refer to TM 55-1520-228-10 for unloading and clearing procedures; then press reset button on control box to extinguish GUN NOT CLEARED light.

STEP 2. Check for defective gun clear sensor.

Replace defective sensor.

STEP 3. Check for shorted wiring.

Repair or replace wiring.

9-383. INSTALLATION — ARMAMENT ELECTRICAL SYSTEM. Install armament electrical system components in accordance with paragraph 9-376.

Deleted Paragraph 9-383-1 thru 9-383.28 including Figures 9-23 thru 9-33.

9-384. PITOT TUBE HEATER.

Refer to paragraph 9-354.

9-385. NIGHT VISION GOGGLES SYSTEM. C

Prior to compliance with MWO 55-1520-228-50-32.

9-386. DESCRIPTION — NIGHT VISION GOGGLES (NVG) SYSTEM. The night vision goggles (NVG) system consists of the night vision goggles and associated electrical lighting control and dimming circuitry. The night vision goggles system allows the pilot, when wearing the night vision goggles, to see and read all instruments and control panels without impairing his night vision capability. When night vision goggles switch (S90) is in the NVG position and NVG ENBL/OFF switch (S123) is in the NVG ENBL position, the intensity of the instrument and panel lighting is extremely low and the instruments cannot be seen with the naked eye.

9-387. TESTING — NIGHT VISION GOGGLES (NVG) SYSTEM.

a. Close INSTR LTS, CSL LTS, CAUTION PANEL LTS, and NVG/VR circuit breakers. Rotate INST LTS and CSL LTS controls clockwise. Note that these lights become brightly illuminated.

b. Return INSTR LTS and CSL LTS controls counterclockwise to the normal dim position.

c. Momentarily depress the BRIGHT/DIM switch on caution panel to BRIGHT and note that the caution lights become brightly illuminated.

d. Position NVG ENBL/OFF switch, located on the pedestal, to NVG ENBL and the NVG/NORM switch, located on the pilot cyclic stick to NVG. Check that all instrument lights, console lights, and caution, and warning lights become extremely dim (appear to extinguish) to the naked eye.

WARNING

Do not position NVG switch to NORM while wearing night vision goggles.

e. Test for proper function of the cockpit night vision goggle lighting system as follows:

WARNING

Assure that systems are functional under normal lighting conditions before the NVG test. If caution and warning system lights provide a flashing indication the NVG lighting system cannot be adequately tested for proper function as the flashing indication may fail to illuminate at other conditions of temperature or system voltage. Install the proper fault annunciator panel P/N 206-075-456-101 or subsequent to provide a steady caution/warning light indication.

(1) Place the helicopter in a dark environment or block all light to the cockpit by suitable covers.

(2) Place the NVG ENBL/OFF switch located on the center console to the NVG ENBL position and place the NVG/NORM switch on the cyclic stick to the NVG position.

WARNING

Do not place cyclic stick NVG switch to NORM position while using night vision goggles.

(3) Using night vision goggles, check all instrument and console lighting and all caution and warning lights for proper function. Operate all press to test switches and dimming controls. All lighted items must be clearly visible and legible.

(4) Return all switches to normal position after the check.

f. Remove night vision goggles. Place NVG/NORM to NORM and NVG ENBL/OFF switch to OFF. Note that all instrument lights, console lighting and caution, and warning panel lights return to normal brilliance.

9-388. TROUBLESHOOTING — NIGHT VISION (NVG) GOGGLES SYSTEM. Refer to figure F-31 and table 9-19.

NOTE

Before using table 9-19, ensure all normal operational checks have been performed. If a malfunction exists which is not listed in table 9-19, notify the next higher level of maintenance.

Table 9-19. Troubleshooting — Night Vision Goggles (NVG) System

CONDITION

TEST OR INSPECTION

CORRECTIVE ACTION

1. Night vision goggles relay (K18) will not energize when night vision goggles switch is positioned to NVG position.

STEP 1. Check circuit breaker.

Engage breaker if open or replace defective breaker.

STEP 2. Check for 28 Vdc at pin X1 of NVG relay (K18).

If voltage present replace defective NVG relay.

STEP 3. Loose connections or shorted wiring.

Repair or replace defective wiring. Tighten loose connections.

2. Caution light relay (K19) will not energize when night vision goggles switch is positioned to NVG position.

STEP 1. Check circuit breaker.

Engage breaker if open or replace defective breaker.

STEP 2. Check for 28 Vdc at Pin X1 of caution light relay (K19).

If voltage present replace caution light relay.

STEP 3. Shorted wiring or loose connections.

Repair or replace defective wiring. Tighten loose connections.

3. When NVG switch (S90) is positioned to NVG position, instrument and control panel lights do not illuminate (while using night vision goggles).

STEP 1. Check circuit breaker.

Engage breaker if open or replace defective breaker.

STEP 2. Check for 28 Vdc at pin A of voltage regulator (VR2).

If voltage is present replace voltage regulator (VR2).

STEP 3. Shorted wiring or loose connections.

Repair or replace defective wiring. Tighten loose connections.

INDEX

Subject	Paragraph Figure, Table Number
3-MICRON OIL FILTER (After Compliance with MWO 1-1520-228-50-51).	6-252.1

A

Subject	Paragraph Figure, Table Number
ABBREVIATION.	F-3
Acceptance/Rejection Criteria — Crosstubes — High Landing Gear.	3-65
Acceptance/Rejection Criteria — Crosstubes — Standard Landing Gear.	3-26
Acceptance/Rejection Criteria — Skid Tubes — Standard Landing Gear.	3-14
ACCESS DOORS AND PANELS.	2-71
ACCIDENT ENGINES — PRESERVATION.	E-44.a
Acrylic - Cleaning.	1-21
Adjustment — Combustion Heater Fuel Pressure Relief Valve.	13-97
Adjustment — Cyclic Control System.	11-38
Adjustment — Cyclic Stick Balance Spring.	11-88
Adjustment — Door Assemblies.	2-6
Adjustment — Droop Compensation (N2).	4-106
Adjustment — Engine Assembly.	4-26
Adjustment — Gas Producer (N1).	4-104
Adjustment – Jackshaft.	11-19.1
Adjustment — Power Turbine Governor.	4-105.f
Adjustment — Pressure Regulator Valve.	6-273
Pressure Sensing Switch Installation	F 6-41
Adjustment — Swashplate and Support Assembly (AVIM).	5-120
Adjustment — Swashplate and Support Assembly.	5-113
Collective Lever, Idler Link, and Collar Set Installation	F 5-36
Swashplate Friction Adjustment	F 5-37
Adjustment — Throttle Friction After MWO 55-1520-228-50-26.	4-103.1
Adjustment — Trunnion — Main Rotor (AVIM).	5-42
Alignment — Main Rotor Assembly	F 5-10
Inspection and Repair Limits — Main Rotor Hub Fitting	F 5-18
Inspection and Repair Limits — Main Rotor Hub Pin	F 5-17
Inspection and Repair Limits — Main Rotor Hub Ring	F 5-19
Inspection and Repair Limits — Pitch Horn — Main Rotor	F 5-15
Inspection and Repair Limits — Trunnion — Main Rotor	F 5-3
Main Rotor Grip — Damage Limits	F 5-13
Main Rotor Hub Trunnion and Pillow Block	F 5-4
Main Rotor Mast Nut Torquing	F 5-7
Main Rotor Mast Protective Cap — Plug	F 5-9
Main Rotor Seal (Outboard) Retainer Assembly	F 5-14
Modi.ed Work-Aid for Trunnion Centering	F 5-20
Removal — Main Rotor Assembly	F 5-6
Removal — Main Rotor Blade	F 5-11
Removal — Trunnion Bearing Inner Race	F 5-5
Replacement of Main Rotor Hub Grip Seals and Bearings	F 5-12
T-Handle Work Aid	F 5-8
Torsion — Tension Strap	F 5-16
Adjustment - Voltage Regulator (Installed).	9-52
Adjustment (Rigging) — Collective Pitch Control System.	11-4
Adjustment (Rigging) — Tail Rotor Control (Prior to compliance with MWO 55-1520-228-50-25).	11-100.d
Adjustment and Alignment — Tail Rotor Driveshaft.	6-127
Improved (Spring Type) Bearing Hangers	F 6-22
Improved (Spring Type) Bearing Hangers.	6-127.b
Adjustment/Replacement — Thermocouple Resistor.	8-130
AFT FAIRING.	2-63
AFT FUSELAGE ASSEMBLY.	2-204
AFT SHORT SHAFT.	6-144
AIR DUCT HOSE ASSEMBLY.	6-258
AIR INDUCTION SYSTEM.	4-40
AIR MIXING VALVE.	13-5
Airframe Mounted Fuel Filter Assembly.	10-52
AIRFRAME.	E-42
AIRSPEED INDICATOR.	8-166
Alignment and Balance — Main Rotor Assembly (Installed).	5-6
Alignment and Balance — Tail Rotor (with Balance Wheel).	5-179
Balance Weight Conversion	T 5-3
Troubleshooting — Tail Rotor Assembly	T 5-2
Alignment and Balance (Static), Main Rotor Assembly.	5-9
ALTERNATE FULL LENGTH SKID SHOE.	3-22.1
Alternate installation — Door Seals.	2-13
ALTERNATING CURRENT SYSTEM.	9-197
ALTIMETER.	8-175
ANTI-ICING LEVER.	12-11
ANTICOLLISION LIGHTS.	9-309
Application of Coating for Corrosion Protection — Tail Rotor Driveshafts.	6-172.c
APPLICATION OF EXTERNAL POWER.	1-46
ARMAMENT ELECTRICAL SYSTEM — AIRFRAME. A	9-376
ARMAMENT SUBSYSTEM M27E1. A	16-2
Armament System — Wiring Diagram	F F-16
ARMOR PANELS.	2-124

Subject	Paragraph Figure, Table Number
ASH TRAY.	2-148
Assemble Driveshaft Segment (After MWO 55-1520-228-50-25).	6-164
Assembly — Cross Tubes — High Landing Gear.	3-68
Assembly — Door Assembly.	2-14
Door Vent Locks	F 2-9
Assembly — Float Landing Gear.	3-81
Float Landing Gear	F 3-17
Assembly — Freewheeling Assembly. (AVIM)	6-32
Assembly — Governor Control Linear Actuator. (AVIM)	9-97.t
Governor Control Linear Actuator Mechanical Stop and Limit Shaft Synchronization	F 9-9
Linear Actuator Lockwire Diagram	F 9-10
Assembly — Housing Assembly.	6-49
Assembly — Hub Strap/Pin/Fitting and Ring/Static Stop — Main Rotor. (AVIM).	5-36
Assembly — Hydraulic Pump. (AVIM)	7-18
Assembly — Main Driveshaft P/N 206-040-100-13.	6-14.a
Work Aid For Coupling Grease Distribution	F 6-6
Assembly — Mast Assembly. (AVIM)	6-98
Assembly — Oil Cooler.	4-79
Assembly — Oil Selector (Bypass) Valve. (AVIM)	4-90
Assembly — Pillow Block — Main Rotor Yoke (AVIM).	5-84
Assembly — Skid Shoe Assembly — High Landing Gear.	3-56
Assembly — Skid Shoe Assembly — Standard Landing Gear.	3-22
Removal of Skid and Skid Shoe (Standard Gear)	F 3-9
Assembly — Skid Tubes — Standard Landing Gear.	3-16
Assembly — Solenoid Valve.	7-31
Assembly — Swashplate and Support Assembly (AVIM).	5-119
Assembly — Switch Box Assembly — Collective Control Stick.	9-130
Assembly — Tail Rotor Hub and Blade Assembly.	5-187
Assembly — Tail Rotor Hub and Blades.	5-236
Work Aid — Trunnion Centering Shaft and Trunnion Bearing Liner Plug	F 5-79
Assembly — Tail Rotor Hub.	5-201
Tail Rotor Yoke Rework	F 5-62
Assembly — Tail Rotor Pitch Control Mechanism.	5-213
Assembly — Trunnion — Main Rotor (AVIM).	5-48.c
Assembly - Grips, Main Rotor (AVIM).	5-22
ATAS Armament System Wiring Diagram CS (Sheet 1 of 3)	F FO-4
ATAS Armament System Wiring Diagram CS (Sheet 2)	F FO-4
ATAS Armament System Wiring Diagram CS (Sheet 3)	F FO-4
ATTITUDE INDICATOR A.	8-202
ATTITUDE/ TURN AND SLIP INDICATOR C.	8-211
AUTHORITY FOR SUBSTITUTION	P-7
AUXILIARY EQUIPMENT.	2-142
AUXILIARY FUEL CELL.	10-8
AUXILIARY POWER RECEPTACLE (J120).	9-368
AVIONIC EQUIPMENT.	E-39
AVIONICS COMPARTMENT DOOR.	2-73
AVIONICS COMPARTMENT FLOOR.	2-237
AVIONICS EQUIPMENT.	E-22
Avionics Power — Wiring Diagram C	F F-29
Avionics Pwer — Wiring Diagram A	F F-17
Crashworthy Fuel System — Wiring Diagram A	F F-18

B

Subject	Paragraph Figure, Table Number
Balance Forces — Tail Rotor Control.	11-103.d
Balancing — Tail Rotor Hub and Blade Assembly.	5-238
Balancing - Tail Rotor Hub and Blade Assembly.	5-202
BALLAST INSTALLATION. (Figure 2-1.)	2-208
Balljoint Connector — Power Controls.	4-102.10
BATTERY AND GENERATOR SYSTEM.	9-20
BATTERY RELAY.	9-32
BATTERY.	E-26
BEAM UPPER CABIN ROOF.	2-23
BEARINGS — FREEWHEELING ASSEMBLY.	6-57
BELLCRANKS, LEVERS, AND WALKING BEAMS.	11-112
BLEED AIR HEATER PLENUM.	13-19
BLEED AIR HEATER SYSTEM.	9-346
BLEED AIR INSTALLATION.	4-34
Bleeding — Airframe Mounted Fuel Filter, Engine Fuel Pump and Aircraft Fuel System.	10-61
BOLT AND BLADE LATCH RETAINER.	5-55
BONDED ROD ENDS AND BEARINGS.	11-123
BONDING STRAP – CRASHWORTHY.	10-47
BOOST PUMP (CRASHWORTHY).	10-17
BREAKAWAY TIP — LOWER CUTTER ASSEMBLY.	2-376
Brushes — Run-in.	13-108
Ventilation Blower Brush Replacement	F 13-10
Buildup — Engine Assembly.	4-9.t
Bleed Air Installation	F 4-3
Engine Cleaning Provision	F 4-4
Engine Installation — T63-A-720 C	F 4-2
Engine Installation oil lines after MWO 1-1520-228-50-44	F 4-1.1
BUILDUP — POWER PLANT.	4-7

C

Subject	Paragraph Figure, Table Number
CALIBRATION	P-9
CAP ASSEMBLY — TAIL ROTOR GEARBOX.	6-223
CARGO PLATFORM	2-138
Special Drill Point for Drilling Plexiglas	F 2-24

Subject	Paragraph Figure, Table Number
Window Replacement A C Round Glass	F 2-25
CAUTION AND WARNING LIGHT SYSTEM. A	9-147
CAUTION AND WARNING LIGHT SYSTEM. C	9-150
Caution and Warning Light Systems — Wiring Diagram A	F F-12
Caution and Warning Lights System — Wiring Diagram C	F F-34
CHIP DETECTORS — TAIL ROTOR GEARBOX.	6-217
CHIP DETECTORS — TRANSMISSION.	6-286
CHIP DETECTORS.	9-174
CLEAN AND INSPECT STRAINER PUMP ASSEMBLY.	6-293
Clean, Inspect and Repair – Jackshaft.	11-22.1
Cleaning — Airspeed Indicator.	8-168
Cleaning — Altimeter.	8-177
Cleaning — Anticollision Lights.	9-311
Cleaning — Armor Panels.	2-129
Cleaning — Attitude Indicator.	8-204
Cleaning — Attitude/Turn and Slip Indicator.	8-213
Cleaning — Chip Detectors.	9-176
Cleaning — Clock.	8-264
Cleaning — Controllable Landing Light.	9-280
Cleaning — Cyclic Stick Grip Assembly.	9-137
Cleaning — DC Ammeter.	8-270
Cleaning — Disc Assemblies.	6-176
Cleaning — Disc Assembly.	6-123
Cleaning — Drag Pin.	6-78
Cleaning — Engine Oil Pressure Indicator.	8-14
Cleaning — Engine Oil Temperature Indicator.	8-100
Cleaning — Engine Oil Temperature Transmitter Bulb.	8-108
Cleaning — External Scavenge Oil Filter Assembly.	4-98.5
Cleaning — Fault Annunciator Panel.	9-322
Cleaning — Fault Annunciator Panel. (AVIM)	9-327
Cleaning — Float Landing Gear.	3-76
Cleaning — Forward and Aft Short Shafts.	6-169
Cleaning — Free Air Temperature Indicator (Thermometer).	8-256
Cleaning — Freewheeling Assembly.	6-26
Cleaning – Fuel Filter Assembly.	10-57
Cleaning — Full Length Skid Shoe.	3-22.2
Cleaning — Gas Producer Tachometer Generator.	8-73
Troubleshooting — Gas Producer Tachometer	T 8-3
Cleaning — Gas Producer Tachometer Indicator.	8-64
Cleaning — Governor Control Linear Actuator.	9-95
Cleaning — Grips, Main Rotor (AVIM).	5-19
Cleaning — High Landing Gear.	3-39
Cleaning — Housing Assembly.	6-46
Cleaning — Hydraulic Pump.	7-11
Cleaning — Idler Link Assembly and Collar Set.	5-163
Cleaning — Instrument Panel, Shroud and Console.	2-18
Cleaning — IR/White (Dual) Landing/Searchlight.	9-272
Cleaning — Landing Lights.	9-255
Cleaning — Magnetic Compass (Standby).	8-222
Cleaning — Main Driveshaft.	6-12
Cleaning — Main Rotor Blades Prior to Refinishing.	5-101
Cleaning — Main Rotor Blades.	5-98
Cleaning — Mast Assembly. (AVIM)	6-95
Main Rotor Mast — Disassembly	F 6-14
Cleaning — NVG Position Lights.	9-288
Cleaning — Oil Cooler.	4-76
Cleaning — Oil Cooling Blower and Shaft Assembly.	6-137
Cleaning — Oil Nozzles (Jets).	6-284
Cleaning — Oil Selector (Bypass) Valve.	4-83
Cleaning — Oil Transfer Tube.	6-267
Cleaning — Particle Separator.	4-44
Cleaning — Pillow Block — Main Rotor Yoke (AVIM).	5-81
Cleaning — Pillow Blocks — Main Rotor Yoke.	5-76
Cleaning — Pitch Horn, Main Rotor.	5-27
Cleaning — Pitot Tube.	8-158
Cleaning — Pitot-Static Piping and Fittings.	8-150
Cleaning — Position Lights.	9-287
Cleaning — Power Plant.	4-5
Cleaning — Power Turbine Tachometer Generator.	8-55
Cleaning — Pylon Isolation Mount and Transmission Mount Support.	2-297
Cleaning — SENSOR, RPM.	8-82
Cleaning — Servoactuators (Cyclic and Collective).	7-35
Cleaning — Skid Tubes — Standard Landing Gear.	3-11
Cleaning — Solenoid Valve.	7-28
Cleaning — Soundproofing Blankets.	2-167.a
Cleaning — Standard Landing Gear.	3-4
Cleaning — Starter System.	9-209
Cleaning — Starter-Generator.	9-40
Cleaning — Swashplate and Support Assembly (AVIM).	5-116
Cleaning — Tail Rotor Blades.	5-250
Cleaning — Tail Rotor Driveshafts.	6-161
Cleaning — Tail Rotor Gearbox.	6-184
Cleaning — Tail Rotor Hub.	5-232
Cleaning — Tail Rotor Pitch Change Mechanism.	5-206
Cleaning — Tail Rotor.	5-176
Cleaning — Taillight.	9-302
Cleaning — Torquemeter Indicator.	8-23
Troubleshooting — Engine Oil Pressure Indicator and Torquemeter Indicator	T 8-1
Cleaning — Transmission Oil Pressure Indicator.	8-284
Cleaning — Transmission Oil Pressure Transmitter.	8-293
Cleaning — Trunnion — Main Rotor (AVIM).	5-45
Cleaning — Trunnion — Main Rotor.	5-39
Cleaning — Turbine Outlet Temperature Indicators.	8-121
Cleaning — Turn and Slip Indicator.	8-195

Subject	Paragraph Figure, Table Number
Cleaning — Vertical Speed Indicator.	8-186
Cleaning - Battery.	9-28
Cleaning - Fuel Cell Support.	2-197
Cleaning - Fuel Quantity Indicator.	8-235
Cleaning - Rotor Tachometer Generator.	8-46
Cleaning - Tachometer Indicator.	8-37
Cleaning After Disassembly — Hydraulic Pump.	7-16
Cleaning and Corrosion Protection — Main Rotor Hub.	5-13
Cleaning and Inspection — Pylon Supports. (AVIM)	2-286
Pylon Support Link and Fitting	F 2-55
CLEANING HELICOPTER.	1-15
CLEANING OF HONEYCOMB CORE CAVITY. (AVIM)	2-176
Cleaning.	8-3
Cleaning, Inspection and Repair — Static Vent.	8-165
CLOCK.	8-262
CLOSED CIRCUIT REFUELING RECEIVER.	10-30
CLUTCH ASSEMBLY — FREEWHEELING ASSEMBLY.	6-51
COCKPIT LIGHTS.	9-243
COIL AND BODY ASSEMBLY.	13-74
COLLECTIVE LEVER AND LINK ASSEMBLY.	5-167
COLLECTIVE PITCH CONTROL SYSTEM.	11-1
COLLECTIVE PITCH LINKAGE.	11-25
COLLECTIVE STICKS.	11-5
COMBAT DAMAGED FUEL TANKS.	E-32
Combustion Heater — Wiring Diagram	F F-19
Audio Threshold System — Wiring diagram	F F-22
Engine Auto Relight System — Wiring Diagram A	F F-20
Proximity Warning System — Wiring Diagram A	F F-21
COMBUSTION HEATER ASSEMBLY.	13-43
COMBUSTION HEATER COMBUSTION AIR PRESSURE SWITCH.	13-55
COMBUSTION HEATER COMBUSTION BLOWER.	13-86
COMBUSTION HEATER FUEL FILTER.	13-91
COMBUSTION HEATER FUEL PRESSURE RELIEF VALVE.	13-94
COMBUSTION HEATER FUEL PUMP.	13-98
COMBUSTION HEATER FUEL SHUTOFF VALVE.	13-101
COMBUSTION HEATER IGNITION ASSEMBLY.	13-59
COMBUSTION HEATER PLENUM.	13-47
COMBUSTION HEATER SUPPORT BRACKET.	13-51
COMBUSTION HEATER SYSTEM.	13-38
COMMON ELECTRICAL COMPONENTS.	9-362
Compensation (Swinging) — Magnetic Compass (Standby).	8-224
COMPONENTS INVOLVED IN AN ACCIDENT.	E-1
CONNECTING LINK ASSEMBLY.	12-5
Connector Replacement Chart	
Electrical Symbol Chart	F F-2
CONTROL TUBES.	11-117
CONTROLLABLE LANDING LIGHT **C**.	9-276
Corrosion Removal and Repair — Tail Rotor Gearbox. (AVIM)	6-216
Corrosion Treatment for Inside Surfaces of the Input Pinion Gear. (AVIM).	6-191
COVER ASSEMBLY – BELLCRANK STOP.	11-30
COWLING AND FAIRINGS — ENGINE AND TRANSMISSION.	2-34
CREW AND PASSENGER SEATS.	2-83
Crosstube Supports — Inspection and Repair.	3-60
Crosstube Supports — Installation.	3-61
Crosstube Supports — Removal.	3-59
Crosstube supports (figure 3-12) Description.	3-58
CROSSTUBE SUPPORTS.	3-57
CROSSTUBES — HIGH LANDING GEAR.	3-62
CROSSTUBES — STANDARD LANDING GEAR.	3-23
CUTTER BLADES (UPPER AND LOWER).	2-331
CYCLIC BUTTON SWITCH (S58 and S59).	9-140
CYCLIC CONTROL FRICTION ADJUSTER.	11-48
Cyclic Control Friction Adjustment.	11-92
Cyclic Control Linkage.	11-80
Cyclic Controls Mixing Lever	F 11-10
CYCLIC CONTROL LINKAGE.	11-75
CYCLIC CONTROL STICK ASSEMBLY.	11-40
CYCLIC CONTROL SYSTEM.	11-36
CYCLIC STICK BALANCE SPRING.	11-86
CYCLIC STICK GRIP ASSEMBLY.	9-131
CYCLIC STICK GRIP.	11-54

D

Subject	Paragraph Figure, Table Number
Damage Classification — Engine Pan.	2-203
Damage Limits — Tailboom.	2-247
DAMAGED, CANNIBALIZED OR FAILED ENGINE PRESERVATION PROCEDURE.	E-45
DC AMMETER.	8-268
DC Power and Starter Systems — Wiring Diagram C	F F-28
DC power and Starter Systems — Wiring Diagrams A	F F-8
Force Trim and Hydraulic Control Systems — Wiring Diagram	F F-11
Governor Control Systems — Wiring Diagram	F F-9
Heating, Defogging Blower, and Engine De-Icing Systems — Wiring Diagram	F F-10
Definition — Major Panel Damage.	2-185
Definition — Minor Panel Damage.	2-181
DEFINITIONS.	B-3
DEFOGGING BLOWER MOTORS (B7 and B8).	9-338
DEFOGGING BLOWER SYSTEM.	9-334
Defueling and Drain Valves.	1-7
DELETED	11-99
DELETED.	T 11-4

Subject	Paragraph Figure, Table Number
Troubleshooting — Tail Rotor Control System	T 11-3
Deleted	7-62
DELETED	4-45.1
DEPRESERVATION AFTER FLYABLE STORAGE	E-46.d
DEPRESERVATION AFTER INTERMEDIATE STORAGE	E-48
Airframe	E-48.a
Avionics	E-48.c
Battery	E-48.e
Emergency Equipment	E-48.g
Engine	E-48.j
Fuel System	E-48.i
Hydraulic System	E-48.h
Instruments	E-48.d
Landing Gear	E-48.b
Miscellaneous	E-48.l
Power Train Assembly	E-48.k
Rotors and Controls	E-48.f
DEPRESERVATION AFTER SHORT TERM STORAGE	E-47
Airframe	E-47.a
Avionics	E-47.c
Electrical System	E-47.d
Engine	E-47.i
Fuel System	E-47.g
Hydraulic System	E-47.h
Landing Gear	E-47.b
Miscellaneous	E-47.j
Power Train Assembly	E-47.f
Rotors and Controls	E-47.e
Description	2-316
DESCRIPTION	P-3
Description — 3-Micron Transmission External Oil Filter	6-252.2
Description — Access Doors and Panels	2-72
Description — Aft Fairing	2-64
Description — Aft Fuselage Assembly	2-205
Description — Aft Short Shaft	6-145
Description — Air Duct Hose Assembly	6-259
Description — Air Induction System	4-41
Description — Air Mixing Valve	13-6
Description — Airspeed Indicator	8-167
Description — Altimeter	8-176
Description — Anti-Icing Lever	12-12
Description — Anticollision Lights	9-310
Description — Armament Electrical System	9-377
Description — Armament Subsystem M27E1	16-3
Description — Armor Panels	2-125
Description — Attitude Indicator	8-203
Description — Attitude/Turn and Slip Indicator	8-212
Description — Auxiliary Equipment	2-143
Description – Auxiliary Fuel Cell	10-9
Description — Auxiliary Power Receptacle (J120)	9-369
Description — Avionics Compartment Door	2-74
AFT Fairing Repair	F 2-12.1
Description — Avionics Compartment Floor	2-238
Description — Ballast Installation	2-209
Description — Balljoint Connector	4-102.11
Description — Battery Relay	9-33
Alternate Battery Installation	F 9-2.1
Description — Beam Upper Cabin Roof	2-24
Description — Bearings — Freewheeling Assembly	6-58
Description — Bellcranks, Levers, and Walking Beams	11-113
Description — Bleed Air Heater Plenum	13-20
Description — Bleed Air Heater System	9-347
Description — Bleed Air Installation	4-35
Description — Bolt and Blade Latch Retainer	5-56
Description — Bonded Rod Ends and Bearing	11-124
Description – Bonding Strap (Crashworthy)	10-48
Description — Boost Pump (Crashworthy)	10-18
Description — Breakaway Tip	2-377
Description — Cargo Platform (figure 2-26)	2-139
Description — Caution and Warning Lights System	9-151
Description — Chip Detector Assembly	6-218
Description — Chip Detectors — Transmission	6-287
Description — Chip Detectors	9-175
DESCRIPTION — Cleaning	1-16
Description — Closed Circuit Refueling Receiver	10-31
Description — Clutch Assembly — Freewheeling Assembly	6-52
Description — Cockpit Lights	9-244
Description — Collective Lever and Link Assembly	5-168
Description — Collective Pitch Control System	11-2
Description – Collective Pitch Linkage	11-26
Description — Collective Sticks C	11-7
Description — Combustion Heater Assembly	13-44
Description — Combustion Heater Combustion Air Pressure Switch	13-56
Description — Combustion Heater Combustion Blower	13-87
Description — Combustion Heater Ignition Assembly	13-60
Description — Combustion Heater Plenum	13-48
Description — Combustion Heater Support Bracket	13-52
Description — Combustion Heater System	13-39
Description — Common Electrical Components	9-363
Description — Connecting Link Assembly	12-6
Description — Control Tubes	11-118
Description — Controllable Landing Light System	9-277
Description – Cover Assembly – Bellcrank Stop	11-31
Description — Cowling and Fairings	2-35.a
Description — Crosstubes — High Landing Gear	3-63

Subject	Paragraph Figure, Table Number
Description — Crosstubes — Standard Landing Gear	3-24
Description — Cutter Blades (Upper and Lower)	2-332
Description — Cyclic Button Switch (S58 and S59)	9-141
Description — Cyclic Control Friction Adjuster	11-49
Description — Cyclic Control Linkage	11-76
Description — Cyclic Control Stick Assembly	11-41
Description — Cyclic Control System	11-37
Description — Cyclic Stick Balance Spring	11-87
Description — Cyclic Stick Grip Assembly	9-132
Switch Box Assembly A	F 9-16
Description — Cyclic Stick Grip	11-55
Description — DC Ammeter	8-269
Description — Defogging Blower Motors (B7 and B8)	9-339
Description — Defogging Blower System	9-335
Description – Detent Button	11-13
Description — Disc Assembly	6-174
Description — Doublers	2-354
Removal — Upper Cutter Assembly	F 2-70
Description — Drag Pin	6-76
Description — Drain Installation	2-224
Description — Drip Pan and Frame Assembly	2-52
Description — Drive Train System	6-2
Description — Dust and Moisture Boots	2-158
Description — Emergency Equipment	17-2
Description — Engine Anti-Icing System	12-2
Description — Engine Assembly	4-24
Description — Engine Cowling	2-45
Description — Engine Mount Fittings	4-18
Description — Engine Mounts	2-303
Description — Engine Oil Pressure Indicator. **A**	8-12
Description — Engine Oil Pressure Indicator. **C**	8-13
Description — Engine Oil Temperature Indicator. A	8-98
Description — Engine Oil Temperature System	8-95
Description — Engine Oil Temperature Transmitter Bulb	8-107
Description — Engine Out Warning Switch	9-184
Description — Engine Pan	2-202
Description — Exhaust System	4-55
Description — External Power Receptacle	9-10
Description — External Power Relay	9-15
Description — External Power System	F nonum
Equipment Location A	F 9-1
Description — External Scavenge Oil Filter Assembly	4-98.2
Description — Fault Annunciator Panel	9-321
Description — Filter Bypass Valve	6-238
Description — Filter	6-249
Description — Fire Extinguisher	17-4
Description — Fire Suppressant Foam Assemblies	2-310
Description — Firewall	2-199
Description — First Aid Kit	17-10
Description — Fitting Assembly — Armament (Hard Points)	2-218
Description — Flight Control	7-4
Description — Float Landing Gear	3-75
Description — Force Gradient Assembly	11-61
Description — Force Trim System	9-116
Description — Forward and Aft Short Shafts	6-167
Description — Forward Short Shaft	6-129
Description — Free Air Temperature Indicator (Thermometer)	8-255
Description — Freewheeling Assembly	6-23
Description — Fuel Boost Pump System	9-76
Description — Fuel Cell (Crashworthy Fuel System)	10-4
Description – Fuel Filter Assembly	10-53
Description — Fuel Filter Pressure Switch	9-165
Description — Fuel Pressure Switch	9-160
Description – Fuel Shutoff Lever	10-46.1
Description — Fuel Shutoff Valve (Crashworthy)	10-42
Description — Fuel System (Crashworthy)	10-14
Description — Fuselage	2-2
Description — Gas Producer Tachometer Generator	8-72
Description — Gas Producer Tachometer Indicator	8-63
Description — Generator Shunt	9-46
Description — Global Positioning System (GPS)	8-228.1
Description — Governor Control Linear Actuator	9-92
Troubleshooting — Governor Control System	T 9-4
Description — Governor Control Switch	9-87
Description — Governor Control System	9-83
Description — Grip Reservoir and Sight Glass — Oil Lubricated Main Rotor Hub	5-68
Description — Grips Main Rotor	5-15
Description — Ground Handling Trucks	3-71
Description — Heating and Ventilating System	13-2
Description — High Landing Gear	3-38
Description — Honeycomb Panels and Shell Assembly	2-171
Description — Horizontal Stabilizer (figures 2-50 and 2-51)	2-259
Description — Housing Assembly	6-42
Description — Hub Strap/Pin/Fitting and Ring	5-32
Description — Hydraulic Bypass Solenoid	9-111
Description — Hydraulic Check Valve	7-74
Description — Hydraulic Control System	9-107
Description — Hydraulic Filters	7-61
Description — Hydraulic Hoses, Lines, and Quick-Disconnects	7-68
Description — Hydraulic Pressure Switch	9-182
Description — Hydraulic Pump	7-10
Description — Hydraulic Relief Valve	7-80
Description — Hydraulic Reservoir	7-55
Description — Idler Link and Collar Set	5-160

Subject	Paragraph Figure, Table Number
Description — Ignition Switch.	9-231
Description — Ignition System.	9-226
Description — Inertia Reel Strap.	2-115
Description — Inertia Reel.	2-109
Description — Inner Ring.	5-135
Description — Input Pinion Housing Adapter and Seals.	6-84
Description — Instrument Panel.	8-10
Description — Instrument Panel, Shroud and Console.	2-17
Description — Interior Lights System A	9-238
Description — Intersystem Oil Leakage.	4-96
Description — Inverter.	9-200
Description — IR/White (Dual) Landing/Searchlight.	9-269
Description — Jack Assembly.	3-73.2
Description – Jackshaft.	11-19
Collective Support and Friction Clamp	F 11-2
Description — Jettison Mechanism.	2-29
Description — Landing Light Relays.	9-263
Description — Landing Lights.	9-254
Description — Lever.	5-129
Description — Lighting Provisions.	9-236
Description — Long Shaft.	6-152
Description — Low Level Switch (Crashworhty).	10-25
Description — Low Pressure Sensing Switch.	6-278
Description — Lower Cutter Assembly.	2-371
Description — Lubrication Requirements.	1-34
Description — Magnetic Brake.	11-70
Description — Magnetic Compass (Standby).	8-221
Description — Main Driveshaft.	6-8
Description — Main Rotor Assembly.	5-2
Description — Main Rotor Blade Bolt.	5-86
Description — Main Rotor Blades.	5-97
Description — Main Rotor Controls.	5-109
Description — Main Rotor Hub.	5-12
Description — Main Rotor Pitch Horn Trunnion.	5-92
Description — Main Transmission.	6-69
Description — Map and Data Case.	2-145
Description — Mast Assembly.	6-91
Description — Miscellaneous Equipment.	9-333
Description — Night Vision Goggles (NVG) System.	9-386
Description — Nonessential Bus Relay.	9-70
Description — NVG Position Lights (IR).	9-286
Description — Oil Cooler.	6-254
Description — Oil Cooling Blower and Shaft Assembly.	6-136
Description — Oil Filter Head Assembly.	F 6-40
Flange Puller	F 6-39
Transmission External Components	F 6-40
Transmission Oil System Schematic	F 6-38
Description — Oil Nozzles (Jets.)	6-282
Description — Oil Selector (Bypass) Valve.	4-82
Description — Oil System.	4-63
Description — Oil Tank.	4-65
Description — Oil Transfer Tube.	6-265
Description — Outer Ring.	5-141
Description — Overheat Switch.	13-24.2
Description — Particle Separator.	4-43
Description — Passenger Seats.	2-91
Description — Passive Defense. A	2-56
Description — Pillow Block — Main Rotor Yoke.	5-75
Description — Pilot and Copilot Seats.	2-85
Description — Pitch Horn, Main Rotor.	5-25
Description — Pitch Link Assembly.	5-153
Description — Pitot Heater System.	9-355
Description — Pitot Tube.	8-157
Description — Pitot-Static Piping and Fittings.	8-149
Description — Pitot-Static System.	8-146
Description — Pivot Sleeve.	5-123
Description — Pocket Assembly.	2-152
Description — Position Lights.	9-285
Description — Power Controls.	4-100
Description — Power Plant. C	4-4
Description — Power Turbine Tachometer Generator.	8-54
Description — Pressure Regulator Valve.	6-272
Description — Pressure Switch.	7-49
Description — Primary Directional Control Vulnerability Reduction System (Electrical).	9-120
Description — Pylon isolation mount and Transmission Mount Support.	2-290
Description — Pylon Supports.	2-283
Description — Ram Air Duct.A	16-7
Description — Remote Sensor.	13-14
Description — Restraint Equipment.	2-97
Description — Roll Staked Bearings.	11-127
Description — Sawtooth Blades, Cutter Deflector Upper and Lower.	2-324
Description — Seals — Freewheeling Housing.	6-63
Description — Seals.	6-17
Description — Seat Belts.	2-99
Description — Second Accumulator.	4-12
Description — SENSOR, RPM.	8-81
Description — Servicing.	1-2
Description — Servoactuators (Cyclic and Collective).	7-34
Cyclic and Collective Servoactuator Schematic	F 7-6
Description — Shaft Assembly — Freewheeling.	6-36
Description — Shielded Ignition Lead Assembly.	13-78
Description — Shoulder Harness.	2-104
Description — Sight Gage, Oil Level Assembly.	6-101
Description — Skid Shoe Assembly — High Landing Gear.	3-52
Description — Skid Shoe Assembly — Standard Landing Gear.	3-18
Description — Skid Tubes — High Landing Gear.	3-45
Description — Skid Tubes — Standard Landing Gear.	3-10

Subject	Paragraph Figure, Table Number
Description — Solenoid Valve.	7-21
Description — Soundproofing Blankets (figure 2-27).	2-164
Description — Spindle (Transmission).	6-107
Description — Standard Landing Gear.	3-3
Description — Starter Relay.	9-216
Description — Starter Switch.	9-221
Description — Starter System.	9-208
Description — Static Vent.	8-164
Description — Stiffeners.	2-383
Description — Strut Assemblies (Upper and Lower).	2-340
Description — Sump Valve (Crashworthy).	10-35
Description — Support Assembly (Swashplate).	5-147
Description — Support, Taillight.	2-277
Description — Swashplate and Support Assembly (Figure 5-35).	5-111
Description — Switch Box Assembly — Collective Control Stick.	9-126
Description — Tail Rotor Blades.	5-249
Work Aid — Tail Rotor Blade Installation	F 5-82
Description — Tail Rotor Control System.	11-94
Description — Tail Rotor Driveshaft Cover.	2-253
Description — Tail Rotor Driveshaft.	6-113
Description — Tail Rotor Driveshafts.	6-159
Description — Tail Rotor Gearbox.	6-182
Description — Tail Rotor Hub and Blade Assembly.	5-181
Description — Tail Rotor Hub and Controls.	5-191
Description — Tail Rotor Hub Trunnion.	5-216
Description — Tail Rotor Hub.	5-193
Description — Tail Rotor Pedal Assembly.	11-105
Description — Tail Rotor Pitch Change Mechanism.	5-205
Description — Tail Rotor Pitch Horn.	5-222
Description — Tail Rotor.	5-175
Description — Tail Skid.	2-271
Description — Tailboom.	2-244
Description — Taillight.	9-301
Description — Thermocouple Resistor.	8-129
Description — Torquemeter Indicator.	8-22
Description — Transmission Fairing Assembly.	2-37
Description — Transmission Oil Level Indicator.	6-226.2
Description — Transmission Oil Pressure Indicating System.	8-279
Description — Transmission Oil Pressure Indicator.	8-283
Description — Transmission Oil Pressure Switch.	9-170
Description — Transmission Oil Pressure Transmitter.	8-292
Description — Transmission Oil Pump.	6-228
Description — Transmission Oil System.	6-226
Description — Transmission Oil Temperature Switch.	6-244
Description — Trunnion — Main Rotor.	5-38
Description — Tube Assembly (Flexible).	2-232
Description — Tube Assembly (Metal).	2-226
Description — Turbine Outlet Temperature Indicating System.	8-133
Description — Turbine Outlet Temperature Indicator.	8-137
Description — Turbine Outlet Temperature System.	8-116
Description — Turn and Slip Indicator.	8-194
Description — Upper Cutter Assembly.	2-348
Description — Ventilating and Defogging Blower C	13-27
Description — Ventilating and Defogging Ducts.	13-33
Description — Vertical Fin and Supports (figures 2-50, through 2-53.)	2-265
Description — Vertical Speed Indicator (VSI).	8-185
Description — Vibrator.	13-68
Description — Windshield Deflector Assembly.	2-360
Description — Windshields and Windows.	2-133
Description — WSPS (Figure 2-65) A . Figure 2-66 C).	2-322
Description — Yoke/Shield— Main Rotor Hub.	5-50
Description - Battery and Generator System.	9-21
Description - Battery.	9-25
Description - Fuel Quantity Transmitter.	8-242
Description - Generator Fail Relay.	9-64
Description - Line Control Relay.	9-58
Description - Pressure Switch.	8-249
Description - Rotor Tachometer Generator.	8-45
Description - Servoactuator Support.	7-41
Description - Starter-Generator.	9-39
Description - Tachometer Indicating System.	8-31
Description - Tachometer Indicator.	8-36
Description - Tail Rotor Blades.	5-240
Description - Transmission Oil Temperature Switch.	9-155
Description - Voltage Regulator	9-51
Description Dual Tachometer Indicating System C	8-32
Description.	1-36.f
Consumable Maintenance Supplies and Materials	T 1-2
Special Tools and Test Equipment	T 1-3
Support Equipment	T 1-4
DESCRIPTION.	E-6
Description-Fuel Quantity Indicating System.	8-231
Description-Miscellaneous Instruments.	8-229
Description—Clock.	8-263
Description—Door Assemblies.	2-4
Description—Static Stop— Main Rotor Hub.	5-62
DESIGNATOR SYMBOLS	P-11
DESTRUCTION OF ARMY MATERIAL TO PREVENT ENEMY USE	P-4
DETENT BUTTON.	11-12

Subject	Paragraph Figure, Table Number
DIRECT CURRENT POWER DISTRIBUTION SYSTEM.	9-3
Disassemble – Jackshaft Support and Friction Clamp.	11-23
Disassemble Driveshaft Segment (After MWO 55-1520-228-50-25).	6-163
Forward and Aft Short Tail Rotor Driveshaft	F 6-27
Tail Rotor Driveshaft Segment Disassembly (After Incorporation of MWO 55-1520-228-50-25)	F 6-26
Tail Rotor Gearbox Installation	F 6-28
Disassembly — Air Mixing Valve (AVIM)	13-8
Disassembly — Combustion Heater Ignition Assembly.	13-62
Disassembly — Cyclic Stick Grip Assembly.	9-135.g
Disassembly — Door Assemblies.	2-9
Access Panels and Doors C	F 2-2
Access Panels, Doors, and Ballast Installation	F 2-1
Door Installation	F 2-3
Disassembly — Fault Annunciator Panel. (AVIM)	9-326
Disassembly — Float Landing Gear.	3-79
Disassembly — Force Gradient Assembly.	11-64
Disassembly — Freewheeling Assembly. (AVIM)	6-28
Freewheeling Assembly — Exploded View	F 6-8
Disassembly — Governor Control Linear Actuator. (AVIM)	9-93
Governor Control Linear Actuator Assembly	F 9-8
Disassembly — Grips, Main Rotor (AVIM).	5-17
Disassembly — Housing Assembly.	6-45
Disassembly — Hydraulic Pump. (AVIM)	7-15.b
Disassembly — Main Driveshaft P/N 206-040-100-13.	6-11
Disassembly — Main Driveshaft	F 6-3
Disassembly — Mast Assembly. (AVIM)	6-94
Disassembly — Oil Cooler.	4-77
Disassembly — Oil Cooling Blower and Shaft Assembly.	6-140.a
Disassembly — Oil Selector (Bypass) Valve. (AVIM)	4-87
Disassembly — Passive Defense. A	2-59
Disassembly — Pillow Block — Main Rotor Yoke (AVIM).	5-80
Disassembly — Shielded Ignition Lead Assembly.	13-82
Disassembly — Solenoid Valve.	7-27
Disassembly — Swashplate and Support Assembly (AVIM).	5-115
Removal — Swashplate and Support Assembly	F 5-38
Swashplate and Support Assembly	F 5-39
Disassembly — Switch Box Assembly — Collective Control Stick.	9-127
Disassembly — Tail Rotor Hub and Blade Assembly.	5-186
Disassembly — Tail Rotor Hub and Blades.	5-230
Disassembly — Tail Rotor Hub.	5-231
Disassembly — Tail Rotor Pitch Change Mechanism.	5-209
Disassembly — Trunnion — Main Rotor (AVIM).	5-44.b
DISC ASSEMBLY.	6-119
Discreption - Fuel Quantity Indicator.	8-234
DOOR ASSEMBLIES—CABIN.	2-3
DOUBLERS, UPPER CUTTER.	2-353
DRAG PIN.	6-75
DRAIN INSTALLATION.	2-223
DRIP PAN AND FRAME ASSEMBLY.	2-51
DRIVE TRAIN SYSTEM.	6-1
DUAL TACHOMETER INDICATOR.	8-35
DUST AND MOISTURE BOOTS.	2-157

E

Subject	Paragraph Figure, Table Number
ELECTRICAL SYSTEM.	E-34.b
EMERGENCY EQUIPMENT.	E-40.b
ENGINE ANTI-ICING CONTROL.	4-49
ENGINE ANTI-ICING SYSTEM.	12-1
ENGINE ASSEMBLY.	4-23
ENGINE COWLING.	2-44
Engine Gas Producer Controls Installation.	4-102.1
ENGINE MOUNT FITTINGS.	4-17
ENGINE MOUNTS.	2-302
ENGINE OIL PRESSURE INDICATOR.	8-11
ENGINE OIL TEMPERATURE INDICATOR.	8-97
ENGINE OIL TEMPERATURE SYSTEM.	8-94
ENGINE OIL TEMPERATURE TRANSMITTER BULB.	8-106
ENGINE OUT WARNING SWITCH.	8-88
ENGINE PAN.	2-201
ENGINE.	E-16.l
ENGINEERING AUTHORIZATION	P-13
EXHAUST SYSTEM.	4-54
EXPLANATION OF CHANGE SYMBOLS	P-12
Exterior — Cleaning.	1-18
EXTERIOR LIGHTS SYSTEM.	9-250
EXTERNAL POWER RECEPTACLE ACCESS DOOR.	2-79
EXTERNAL POWER RECEPTACLE.	9-9
EXTERNAL POWER RELAY.	9-14
EXTERNAL POWER SYSTEM.	9-5
EXTERNAL SCAVENGE OIL FILTER ASSEMBLY.	4-98.1

F

Subject	Paragraph Figure, Table Number
Fault Annunciator Panel Schematic A	F FO-2
FAULT ANNUNCIATOR PANEL.	9-320
Filler Plug Packing Replacement.	6-198
FILTER BYPASS VALVE.	6-237
FILTER.	6-248
FIRE EXTINGUISHER.	17-3
FIREWALL.	2-198

Subject	Paragraph Figure, Table Number
FIRST AID KIT.	17-9
FITTING ASSEMBLY - ARMAMENT (Hard Points).	2-217
FLIGHT CONTROL.	7-3
FLOAT LANDING GEAR.	3-74
FORCE GRADIENT ASSEMBLY.	11-60
FORCE TRIM SYSTEM.	9-115
FORWARD AND AFT SHORT SHAFTS.	6-166
FORWARD SHORT SHAFT.	6-128
FRAME ASSEMBLY.	2-119
FREE AIR TEMPERATURE INDICATOR (THERMOMETER).	8-254
FREEWHEELING ASSEMBLY.	6-22
FREEWHEELING HOUSING.	6-34
FUEL BOOST PUMP SYSTEM.	9-75
FUEL CELL — CRASHWORHTY FUEL SYSTEM.	10-3
FUEL CELL SUPPORT. (AVIM) (FIGURE 2-44).	2-196
Fuel Control Lever.	4-102.8
FUEL FILTER PRESSURE SWITCH.	8-276
FUEL PRESSURE SWITCH.	9-159
Fuel Quantity Indicating System.	8-230
Fuel Quantity Indicator.	8-233
FUEL QUANTITY TRANSMITTER.	8-241
FUEL SHUTOFF LEVER.	10-46
FUEL SHUTOFF VALVE — CRASHWORTHY.	10-41
FUEL SYSTEM — CRASHWORTHY.	10-13
Fuel System Servicing (Rapid (Hot) Refueling).	1-6
Fuel System.	1-3
FUEL SYSTEM.	E-17
Alternate Method.	E-31.b
Primary Method.	E-31.a
Functional Check — Airspeed Indicator.	8-170
Functional Check — Altimeter.	8-179
Functional Check — Altimeter, Airspeed, and Vertical Speed Indicators — Pitot-Static System.	8-155
Airspeed Indicator Functional Check.	8-155.b
Altimeter Function Check.	8-155.e
Connector for Pitot and Static Leak Check (Typical)	F 8-2
Static Line Leak Check.	8-155.c
Vertical Speed Indicator Functional Check.	8-155.d
Functional Check — Vertical Speed Indicator.	8-188
Functional Checks — Tail Rotor Control.	11-102.c
Functional Test — Controllable Landing Light.	9-278
Functional Test — Engine Oil Temperature Bulb — Bench (AVIM).	8-112
Functional Test — IR/White (Dual) Landing/Searchlight.	9-270
FUSELAGE ASSEMBLY (HONEYCOMB PANELS AND SHELL ASSEMBLY).	2-170
FUSELAGE.	2-1

G

Subject	Paragraph Figure, Table Number
Gas Producer control Bellcrank.	4-102.4
Gas Producer control Bracket.	4-102.2
Gas Producer Control Tube.	4-102.6
GAS PRODUCER TACHOMETER GENERATOR.	8-71
GAS PRODUCER TACHOMETER INDICATOR.	8-62
GENERAL	P-1
General — Alternating Current System.	9-198
General — Direct Current Power Distribution System.	9-4
General — Exterior Lights System.	9-251
General — Exterior Lights System. After compliance with MWO 55-1520-228-50-32 A C .	9-252
GENERAL — FUEL SYSTEM.	10-2
General — Hydraulic System.	7-2
General Information.	1-48
General Maintenance — Fuel System (Crashworthy).	10-15
General.	9-2
GENERAL.	4-1
GENERATOR FAIL RELAY.	9-63
GENERATOR SHUNT.	9-45
Global Positioning System (GPS) (After compliance with MWO 1-1520-228-50/53).	8-228
GOVERNOR CONTROL LINEAR ACTUATOR.	9-91
GOVERNOR CONTROL SWITCH.	9-86
GOVERNOR CONTROL SYSTEM.	9-82
GRIP RESERVOIRS AND SIGHT GLASS — OIL LUBRICATED MAIN ROTOR HUB.	5-67
GRIPS — MAIN ROTOR	5-14
GROUND HANDLING TRUCKS.	3-70
GROUND HANDLING.	1-35

H

Subject	Paragraph Figure, Table Number
HANDLE — JACK ASSEMBLY, GROUND HANDLING.	3-73.1
HEATING AND VENTILATING SYSTEM.	13-1
Helicopter Covers.	1-41
HIGH LANDING GEAR.	3-37
Hoisting.	1-42
HONEYCOMB PANEL MAJOR EDGE DAMAGE — LIMITS AND REPAIR. (AVIM)	2-191
HONEYCOMB PANEL MINOR EDGE DAMAGE — LIMITS AND REPAIR. (AVIM)	2-188
HORIZONTAL STABILIZER.	2-258
HOSES AND LINES.	6-291
HOUSING ASSEMBLY.	6-41
HUB STRAP/PIN/FITTING AND RING — MAIN ROTOR.	5-31
HYDRAULIC BYPASS SOLENOID.	9-110
HYDRAULIC CHECK VALVE.	7-73
HYDRAULIC CONTROL SYSTEM.	9-106
HYDRAULIC FILTERS.	7-60
HYDRAULIC HOSES, LINES, AND QUICK-DISCONNECTS.	7-67
HYDRAULIC PRESSURE SWITCH.	9-181

Subject	Paragraph Figure, Table Number
HYDRAULIC PUMP.	7-9
HYDRAULIC RELIEF VALVE.	7-79
HYDRAULIC RESERVOIR.	7-54
HYDRAULIC SYSTEM.	E-8

I

Subject	Paragraph Figure, Table Number
Identification of Metal Particles.	6-5
IDLER LINK AND COLLAR SET.	5-159
IGNITION SWITCH.	9-230
IGNITION SYSTEM.	9-225
INERTIA REEL.	2-108
INERTIAL REEL STRAP.	2-114
INNER RING.	5-134
INPUT PINION HOUSING ADAPTER AND SEALS.	6-83
INSERT REPLACEMENT. (AVIM)	2-194
Inspect — Overheat Switch.	13-24.4
Inspection — 3-Micron Filter.	6-252.3
Inspection — Acceptance/Rejection Criteria — Cyclic Control Stick Assembly.	11-45
Inspection — Acceptance/Rejection Criteria — Main Rotor Blade.	5-99
Inspection — Main Rotor Blade	F 5-32
Main Rotor Blade — Bond Area Inspection	F 5-31
Repair Dimensions — Main Rotor Blade Corrosion	F 5-33
Inspection — Acceptance/Rejection Criteria — Power Controls.	4-101
Power Control — Torque Tube Assembly Damage Limits	F 4-17
Inspection — Acceptance/Rejection Criteria — Shielded Ignition Lead Assembly.	13-79
Shielded Lead Assembly	F 13-9
Inspection — Acceptance/Rejection Criteria — Skid Tubes — High Landing Gear (Figure 3-13).	3-48
Inspection — Acceptance/Rejection Criteria — Tail Rotor Blades.	5-242
Repair — Tail Rotor Blade	F 5-80
Voids at the trailing edge of the shell.	5-242.h
Inspection — Acceptance/Rejection Criteria - High Landing Gear.	3-40
Inspection — Acceptance/Rejection Pitch Link Assembly.	5-156
Pitch Link Assembly — Preliminary Dimensions Prior to Tracking	F 5-52
Inspection — Aft Fairing.	2-65
Inspection — Aft Fuselage Assembly.	2-206
Inspection — Aft Short Shaft.	6-147
Inspection — Air Duct Hose Assembly.	6-260
Inspection — Air Mixing Valve (AVIM).	13-9
Inspection — Airspeed Indicator.	8-169
Inspection — Altimeter.	8-178
Inspection — Anti-Icing Lever.	12-13
Inspection — Anticollision Lights.	9-312
Inspection — Armament Electrical System.	9-378
Inspection — Armor Panels.	2-126
Inspection — Attitude Indicator.	8-205
Inspection — Attitude/Turn and Slip Indicator.	8-214
Inspection — Auxiliary Power Receptacle (J120).	9-370
Inspection — Avionics Compartment Door.	2-75
Inspection — Avionics Compartment Floor.	2-239
Inspection — Ballast Installation.	2-210
Inspection — Balljoint Connector — Power Controls.	4-102.12
Inspection — Battery Relay.	9-34
Inspection — Beam Upper Cabin Roof.	2-25
Inspection — Bearings — Freewheeling Assembly.	6-59
Inspection — Bellcranks, Levers, and Walking Beams.	11-114
Tail Rotor Controls Friction Adjustment (After compliance with MWO 55-1520-228-50-25)	F 11-16
Tail Rotor Controls Rigging (After compliance with MWO 55-1520-228-50-25)	F 11-15
Tail Rotor Pitch Control Pedal — Damage Limits	F 11-14
Inspection — Bleed Air Heater Plenum.	13-21
Inspection — Bleed Air Heater System.	9-348
Inspection — Bleed Air Installation.	4-36
Inspection — Bolt and Blade Latch Retainer.	5-57
Inspection — Bonded Rod Ends and Bearings.	11-125
Bearing — Maximum Allowable Play	T 11-5
Inspection – Bonding Strap (Crashworthy).	10-49
Inspection — Boost Pump (Crashworthy).	10-19
Inspection — Breakaway Tip.	2-378
Inspection — Buildup — Power Plant.	4-8
Engine Installation	F 4-1
Inspection — Chip Detector Assembly.	6-220
Inspection — Chip Detectors — Transmission.	6-289
Inspection — Chip Detectors.	6-195
Inspection — Clock.	8-265
Inspection — Clutch Assembly — Freewheeling Assembly.	6-53
Inspection — Cockpit Lights.	9-245
Inspection — Coil and Body Assembly.	13-75
Inspection — Collective Lever and Link Assembly.	5-171
Inspection – Collective Pitch Linkage.	11-27
Inspection — Collective Sticks.	11-8
Inspection — Combustion Heater System.	13-40
Inspection — Common Electrical Components.	9-364
Inspection — Connecting Link Assembly.	12-7
Troubleshooting — Engine Anti-Ice System	T 12-1
Inspection — Control Tubes.	11-119
Inspection — Controllable Landing Light.	9-281
Inspection – Cover Assembly – Bellcrank Stop.	11-32
Inspection — Crosstube — Standard Landing Gear.	3-25
Inspection — Crosstubes — High Landing Gear.	3-64

Subject	Paragraph Figure, Table Number
Inspection — Cutter Blades (Upper and Lower).	2-333
Inspection — Cyclic Button Switch (S58 and S59).	9-142
Inspection — Cyclic Control Friction Adjuster.	11-50
Inspection — Cyclic Control Linkage.	11-82
Inspection — Cyclic Control Stick Assembly.	11-43
Inspection — Cyclic Stick Balance Spring.	11-89
Inspection — Cyclic Stick Grip Assembly.	9-133
Inspection — Cyclic Stick Grip.	11-56
Inspection — DC Ammeter.	8-271
Inspection — Defogging Blower Motors (B7 and B8).	9-340
Inspection – Detent Button.	11-14
Inspection — Disc Assembly.	6-175
Inspection — Door Assemblies.	2-5
Repair Material	T 2-1
Inspection — Doublers.	2-355
Inspection — Drag Pin.	6-80
Inspection — Drip Pan and Frame Assembly.	2-53
Inspection — Dust and Moisture Boots.	2-159
Inspection — Engine Anti-Icing Control.	4-50
Inspection — Engine Cowling.	2-46
Inspection — Engine Mount Fittings.	4-19
Inspection — Engine Mounts.	2-304
Engine Mount — Wear and Damage Limits	F 2-63
Engine Mount Leg — Wear and Damage Limits	F 2-62
Engine Mounts	F 2-61
Transmission Mount Support and Access	F 2-60
Inspection — Engine Oil Pressure Indicator.	8-15
Inspection — Engine Oil Temperature Indicator.	8-101
Inspection — Engine Oil Temperature Transmitter Bulb.	8-109
Inspection — Engine Out Warning Switch.	8-90
Inspection — Exhaust System.	4-57
Inspection — External Power Receptacle.	9-11
Inspection — External Power Relay.	9-16
Troubleshooting — External Power System	T 9-1
Inspection — External Scavenge Oil Filter Assembly.	4-98.3
Inspection — External Scavenge Oil Filter Element.	4-98.9
Inspection — Fault Annunciator Panel. (AVIM)	9-328
Fault Annunciator Panel A	F 9-20
Fault Annunciator Panel C	F 9-21
Inspection — Filter Bypass Valve.	6-240
Inspection — Filter.	6-251
Inspection — Fire Extinguisher.	17-6
Inspection — Fitting Assembly — Armament (Hard Points). A	2-219
Inspection — Float Landing Gear.	3-77
Inspection — Force Gradient Assembly.	11-62
Inspection — Forward Short Shaft.	6-131
Inspection — Frame Assembly.	2-120
Inspection — Free Air Temperature Indicator (Thermometer).	8-257
Inspection — Freewheeling Assembly (Installed).	6-24
Inspection — Freewheeling Assembly.	6-27
Inspection — Freewheeling Assembly. (AVIM)	6-29
Limit Chart — Freewheeling Assembly	F 6-9
Inspection — Fuel Boost Pump System.	9-79
Inspection — Fuel cell (Crashworthy Fuel System).	10-5
Inspection — Fuel Control Lever.	4-102.9
Inspection – Fuel Filter Element.	10-56
Inspection — Fuel Filter Pressure Switch.	9-167.d
Inspection — Fuel Pressure Switch.	9-162
Inspection – Fuel Shutoff Lever.	10-46.3
Inspection — Fuel Shutoff Valve (Crashworthy).	10-44
Inspection — Full Length Skid Shoe.	3-22.3
Inspection — Gas Producer Control Bellcrank.	4-102.5
Inspection — Gas Producer Control Bracket.	4-102.3
Inspection — Gas Producer Control Tube.	4-102.7
Inspection — Gas Producer Tachometer Generator.	8-74
Inspection — Gas Producer Tachometer Indicator.	8-65
Inspection — Generator Shunt.	9-47
Inspection — Governor Control Linear Actuator.	4-113
Inspection — Governor Control Linear Actuator. (AVIM)	9-94
Inspection — Governor Control Switch.	9-88
Inspection — Grip Reservoirs and Sight Glass — Oil Lubricated Main Rotor Hub.	5-69
Inspection and Repair Limits — Main Rotor Hub Static Stop	F 5-25
Inspection — Grips, Main Rotor (AVIM).	5-18
Inspection — Heating and Ventilating System.	13-3
Inspection — Honeycomb Panels and Shell Assembly.	2-172
Honeycomb Panel — Aft Lower Cabin Shell Repair	F 2-30
Honeycomb Panel — Electrical Compartment Floor Repair	F 2-37
Honeycomb Panel — Forward Lower Cabin Shell Repair	F 2-29
Honeycomb Panels — Aft Fuel Cell Bulkhead Repair	F 2-35
Honeycomb Panels – Crew Seat and Bulkhead Repair	F 2-31
Honeycomb Panels — Lower Aft Fuselage Repair	F 2-36
Honeycomb Panels — Oil Cooler Support Repair	F 2-38
Honeycomb Panels — Passenger Seat Structure Repair	F 2-32
Honeycomb Panels — Seatback Electrical Shelf Repair	F 2-34
Honeycomb Panels — Upper Cabin Roof Repair	F 2-28
Honeycomb Panels — Vertical Fin Repair	F 2-39

Subject	Paragraph Figure, Table Number
Honeycomb Panels - Passenger Seatback Bulkhead Repair	F 2-33
Inspection — Horizontal Stabilizer.	2-260
Inspection — Housing Assembly.	6-43
Inspection — Hub Strap/Pin/Fitting and Ring — Main Rotor.	5-34
Inspection — Hydraulic Bypass Solenoid.	9-112
Inspection — Hydraulic Check Valve.	7-75
Inspection — Hydraulic Filters.	7-63
Inspection — Hydraulic Hoses, Lines, and Quick-Disconnects.	7-69
Inspection — Hydraulic Pump (Installed).	7-12
Inspection — Hydraulic Pump (Removed).	7-14
Maximum Allowable Leakage for In-Service Components	T 7-2
Inspection — Hydraulic Relief Valve.	7-81
Inspection — Hydraulic Reservoir.	7-56
Inspection — Idler Link and Collar Set.	5-161
Inspection — Ignition Switch.	9-232
Inspection — Ignition System.	9-227
Inspection — Inertia Reel Strap.	2-116
Inspection — Inertia Reel.	2-110
Inspection — Inner Ring.	5-136
Inspection — Input Pinion Housing Adapter and Seals.	6-85
Inspection — Input Pinion Housing Adapter and Seals. (AVIM)	6-87
Input Pinion Housing Adapter and Seals	F 6-12
Inspection — Instrument Panel, Shroud and Console.	2-19
Inspection — Interior Lights System.	9-240
Inspection — Intersystem Oil Leakage.	4-97
Inspection — Inverter.	9-201
Inspection — IR/White (Dual) Landing/Search-light.	9-273
Inspection – Jackshaft.	11-20
Inspection — Jettison Mechanism.	2-30
Inspection — Landing Light Relays.	9-264
Inspection — Landing Lights.	9-256
Inspection — Lever.	5-130
Inspection — Long Shaft.	6-154
Inspection — Lower Cutter Assembly.	2-372
Inspection — Magnetic Brake.	11-71
Inspection — Magnetic Compass (Standby)	8-223
Inspection — Main Driveshaft (Installed).	6-9
Inspection — Main Driveshaft (Removed).	6-13
Damage Limits — Main Driveshaft	F 6-4
Spherical Outer Coupling Spline Teeth — Inspection	F 6-5
Inspection — Main Rotor Assembly.	5-4
Inspection — Main Rotor Blade Bolt.	5-88
Inspection — Main Rotor Pitch Horn Trunnion.	5-93
Inspection — Main Transmission.	6-70
Inspection — Mast Assembly.	6-92
Inspection — Mast Assembly. (AVIM)	6-96
Main Rotor Mast Subassemblies	F 6-15
Inspection — Nonessential Bus Relay.	9-71
Inspection — NVG Position Lights.	9-290
Inspection — Oil Cooler.	4-78
Inspection — Oil Cooling Blower and Shaft Assembly.	6-138
Inspection — Oil Filter Head Assembly.	6-235
Inspection — Oil Selector (Bypass) Valve.	4-84
Inspection — Oil Selector (Bypass) Valve. (AVIM)	4-88
External Scavenge Oil Filter Assembly.	F 4-16.1
External Scavenge Oil Filter Element	F 4-16.2
Selector Valve Assembly (Engine Oil System Bypass Valve)	F 4-16
Inspection — Oil Supply System Hoses, Fittings, and Tubing.	4-93
Inspection — Oil Tank.	4-66
Inspection — Oil Transfer Tube.	6-268
Inspection — Outer Ring.	5-142
Inspection — Particle Separator.	4-45
Particle Separator	F 4-7
Inspection — Passenger Seats.	2-92
Seats and Restraint Installation	F 2-13
Inspection — Passive Defense. A	2-57
Inspection — Pillow Block — Main Rotor Yoke (AVIM).	5-82
Removal — Pillow Block Seal	F 5-26
Inspection — Pillow Block — Main Rotor Yoke.	5-77
Inspection — Pilot and Copilot Seats.	2-86
Inspection — Pitch Horn, Main Rotor.	5-28
Inspection — Pitch Link Assembly.	5-154
Inspection — Pitot Heater System.	9-356
Inspection — Pitot Tube.	8-159
Inspection — Pitot-Static Piping and Fittings.	8-151
Inspection — Pivot Sleeve.	5-124
Inspection — Pocket Assembly.	2-153
Inspection — Position Lights.	9-289
Inspection — Power Turbine Tachometer Generator.	8-56
Inspection — Pressure Regulator Valve.	6-275
Inspection — Pressure Switch.	7-50
Inspection — Primary Direction Control Vulnerability Reduction System (Electrical).	9-122
Inspection — Pylon Isolation Mount (P/N 206-030-539-3) and Transmission Mount Support.	2-294
Damage Limits — Transmission Mount Support Stop	F 2-56
Pylon Isolation Mount Installation (P/N 206-030-539-3)	F 2-57
Inspection — Pylon Isolation Mounts, P/N 206-030-539-5 and -101 and Transmission Mount Support.	2-292
Inspection — Pylon Supports.	2-284
Inspection — Ram Air Duct. A	16-8
Inspection — Reference TM 1-1500-204-23.	17-13
Emergency Equipment	F 17-1
Inspection — Remote Sensor.	13-16

Subject	Paragraph Figure, Table Number
Inspection — Roll Staked Bearings.	11-128
Inspection — Seal Foam Assembly.	2-312
Inspection — Seals — Freewheeling Housing.	6-64
Inspection — Seals.	6-18
Inspection — Seat Belts.	2-100
Inspection — Second Accumulator.	4-13
Inspection — SENSOR, RPM.	8-83
Inspection — Servoactuator Support (Removed).	7-45
Inspection — Servoactuators (Cyclic and Collective).	7-36
Hydraulic Servoactuator	F 7-7
Inspection — Shaft Assembly — Freewheeling.	6-37
Inspection — Shoulder Harness.	2-105
Inspection — Shunts and Bus Bars.	9-188
Inspection — Sight Gage, Oil Level Assembly.	6-102
Inspection — Skid Shoe Assembly — High Landing Gear.	3-53
Inspection — Skid Shoe Assembly — Standard Landing Gear.	3-19
Inspection — Skid Tubes — High Landing Gear.	3-46
Inspection — Skid Tubes — Standard Landing Gear.	3-12
Inspection — Solenoid Valve.	7-29
Inspection — Soundproofing Blankets.	2-165
Inspection — Spindle (Transmission).	6-108
Inspection — Standard Landing Gear.	3-5.h
Determining Crosstube Center (Typical)	F 3-1
Inspection — Starter Relay.	9-217
Inspection — Starter Switch.	9-222
Inspection — Starter System.	9-210
Inspection — Starter-Generator.	9-41
Starter-Generator Brush Wear	F 9-3
Inspection — Stiffeners.	2-384
Inspection — Strut Assemblies (Upper and Lower).	2-341
Removal — Cutter Blades (Upper and Lower)	F 2-68
Inspection — Sump Valve (Crashworthy).	10-36
Inspection — Support Assembly (Swashplate).	5-148
Inspection — Support Taillight.	2-278
Inspection — Swashplate and Support Assembly (AVIM).	5-117
Inspection and Repair Limits — Collective Lever	F 5-46
Inspection and Repair Limits — Collective Lever Link (Idler)	F 5-45
Inspection and Repair Limits — Collective Sleeve	F 5-44
Inspection and Repair Limits — Inner Ring	F 5-42
Inspection and Repair Limits — Lever	F 5-41
Inspection and Repair Limits — Outer Ring	F 5-43
Swashplate and Support Assembly — Limits Chart	F 5-40
Inspection — Swashplate and Support Assembly.	5-112.d
Swashplate and Support Assembly	F 5-35
Inspection — Switch Box Assembly — Collective Control Stick.	9-128
Inspection — Tail Rotor Blade Bearings.	5-244
Inspection — Tail Rotor Blades.	5-252
Skins inboard of station 23.	5-252.a
Skins outboard of station 23.	5-252.b
Tail Rotor Blade	F 5-83
Tail rotor blade rivet installation	F 5-83.1
Void Limits.	5-252.e
Inspection — Tail Rotor Control Linkage.	11-96
Tail Rotor Control System	F 11-12
Inspection — Tail Rotor Driveshaft Cover.	2-255
Inspection — Tail Rotor Driveshaft.	6-115
Inspection — Tail Rotor Gearbox Input Seal.	6-213
Inspection — Tail Rotor Gearbox.	6-183.d
Tail Rotor Gearbox External Components	F 6-33
Inspection — Tail Rotor Hub and Blade Assembly.	5-182
Inspection — Tail Rotor Hub Trunnion. (AVIM)	5-218
Inspection — Tail Rotor Hub.	5-233.b
Disassembly — Tail Rotor Hub and Blade Assembly	F 5-60
Inspection and Repair Limits — Tail Rotor Hub Yoke	F 5-58
Inspection Limits Chart — Pitch Link and Crosshead	F 5-59
Inspection — Tail Rotor Installation Components.	5-184
Inspection — Tail Rotor Pedal Assembly.	11-106
Inspection — Tail Rotor Pitch Change Mechanism.	5-210
Inspection and Repair Limits — Tail Rotor Hub Trunnion	F 5-63
Repair Limits — Tail Rotor — Pitch Change Mechanism Housing and Trunnion	F 5-66
Repair Limits — Tail Rotor — Pitch Change Mechanism Idler Clevis	F 5-67
Repair Limits — Tail Rotor — Pitch Change Mechanism Lever and Cap	F 5-65
Tail Rotor — Pitch Change Mechanism	F 5-64
Inspection — Tail Rotor Pitch Horn.	5-224
Inspection — Tail Rotor.	5-177
Inspection — Tail Skid.	2-272
Inspection — Tailboom.	2-245
Inspection — Taillight.	9-303
Inspection — Terminal Boards.	9-193
Inspection — Torquemeter Indicator.	8-24
Inspection — Transmission Fairing Assembly.	2-38
Engine and Transmission Cowling C	F 2-11
Inspection — Transmission Oil Level Indicator.	6-226.3
Inspection — Transmission Oil Pressure Indicator.	8-285
Inspection — Transmission Oil Pressure Switch (S13).	9-172
Inspection — Transmission Oil Pressure Transmitter.	8-294
Inspection — Transmission Oil Pump.	6-229

Subject	Paragraph Figure, Table Number
Inspection — Transmission Oil Temperature Switch.	6-246
Inspection — Transmission Support Straps.	2-301
Inspection — Trunnion — Main Rotor (AVIM).	5-46
Work-Aid for Trunnion Spindle Inner Bearing Race Removal	F 5-22
Inspection — Trunnion — Main Rotor.	5-40
Inspection — Trunnion and Lever Assembly.	11-81.2
Inspection — Tube Assembly (Flexible).	2-233
Inspection — Tube Assembly (Metal).	2-227
Inspection — Turbine Outlet Temperature (TOT) Indicator.	8-122
Inspection — Turbine Outlet Temperature Indicator.	8-139
Inspection — Turn and Slip Indicator.	8-196
Inspection — Upper Cutter Assembly.	2-349
Removal — Strut Assemblies (Upper and Lower)	F 2-69
Inspection — Ventilating and Defogging Ducts.	13-34
Inspection — Vertical Fin and Supports.	2-266
Inspection — Vertical Speed Indicator.	8-187
Inspection — Vibrator.	13-69
Inspection — Windshield and Windows.	2-134
Inspection — Windshield Deflector Assembly.	2-361.c
Inspection — Yoke/Shield Main — Rotor Hub (AVIM).	5-52
Inspection - Battery.	9-26
Inspection - Engine Assembly.	4-31
Inspection - Fuel Cell Support.	2-197.1
Inspection - Fuel Quantity Indicator.	8-236
Inspection - Generator Fail Relay.	9-65
Inspection - Line Control Relay.	9-59
Inspection - Pressure Switch.	8-250
Inspection - Rotor Tachometer Generator.	8-47
Inspection - Servoactuator Support (Installed).	7-42
Inspection - Tachometer Indicator.	8-38
Inspection - Transmission Oil Temperature Switch.	9-157
Inspection - Voltage Regulator.	9-53
Inspection (Disassembly) — Idler Link Assembly and Collar Set.	5-164
Inspection (Installed) — Collective Lever and Link Assembly.	5-169
Inspection and Cleaning — Fuel Cell (Crashworthy Fuel System).	10-5.1
Inspection and Cleaning — Fuel System (Crashworthy).	10-15.1
Inspection and Repair — Forward and Aft Short Shafts.	6-168
Inspection and Repair — Tail Rotor Driveshaft.	6-160
Segmented Tail Rotor Driveshaft (After Incorporation of MWO 55-1520-228-50-25)	F 6-25
Inspection and Repair — Tail Rotor Gearbox Output Seal.	6-209
Inspection and Replacement — Combustion Heater Ignition Assembly.	13-63
Ignition Unit Assembly	F 13-5
Inspection Battery Quick-Disconnect.	9-27
INSPECTION OF STORED HELICOPTERS.	E-5
INSPECTION PANELS.	2-80
INSPECTION PRIOR TO STORAGE.	E-28.d
INSPECTION REQUIREMENTS.	1-47
Inspection Sawtooth Blades, Cutter Deflector, (Upper and Lower).	2-325
Inspection.	2-318
Inspection-Pylon Isolation Mounts (P/N 206-030-539-5 and -101) and Transmission Mount Support.	2-295
Inspection of Transmission Isolation Mount (206-030-539-5 and -101)	T 2-2
Inspection—Static Stop— Main Rotor Hub.	5-64
INSTALL — 3-MICRON OIL FILTER ASSEMBLY (figure 6-40.1).	6-252.7
3-Micron Oil Filter Assembly	F 6-40.1
3-Micron Oil Filter Element	F 6-40.2
Install — Left and Right Hand Pylon Support Straps.	2-207.3
Tailboom Attachment Fitting Repair	F 2-45
Install Rubber Pad Below Fuel Receiver.	2-195
Honeycomb Panels — Installation of Inserts	F 2-43
INSTALL STRAINER PUMP ASSEMBLY.	6-294
Installation — Aft Ballast.	2-216
Installation — Aft Fairing. A	2-69
Installation — Aft Short Shaft.	6-150
Installation — Air Duct Hose Assembly.	6-263
Installation — Air Mixing Valve.	13-12
Installation — Airspeed Indicator.	8-174
Installation — Altimeters.	8-183
Installation — Anti-Icing Lever.	12-16
Installation — Anticollision Lights.	9-318
Installation — Armament Electrical System.	9-383
Installation — Armament Subsystem M27E1.	16-5.j
Armament Installation A (Sheet 1 of 4)	F 16-1
Armament Installation A (Sheet 2 of 4)	F 16-1
Armament Installation A (Sheet 3 of 4)	F 16-1
Armament Installation A (Sheet 4 of 4)	F 16-1
Installation — Armor Panels.	2-131
Installation — Ash Tray.	2-150
Installation — Attitude Indicator.	8-210
Installation — Attitude/Turn and Slip Indicator.	8-219
Installation – Auxiliary Fuel Cell.	10-12
Installation — Auxiliary Power Receptacle (J120).	9-375
Installation — Avionics Compartment Door.	2-78
Installation — Avionics Compartment Floor.	2-242
Installation — Battery Relay.	9-36
Installation — Bearings — Freewheeling Assembly.	6-62
Installation — Bellcranks, Levers, and Walking beams.	11-116
Installation — Bleed Air Heater Plenum.	13-24

Subject	Paragraph Figure, Table Number
Installation — Bleed Air Heater System.	9-353
Installation — Bleed Air Installation.	4-39
Combustion Chamber Drain Hose Installation	F 4-6
Installation — Bolt and Blade Latch Retainer.	5-60
Inspection and Repair Limits — Bolt and Blade Latch Retainer — Main Rotor	F 5-24
Installation – Bonding Strap (Crashworthy).	10-51
Installation — Breakaway Tip.	2-381
Installation — Brushes.	13-107
Installation — Cargo Platform.	2-141
Installation — Channel C	2-369
Removal — Sawtooth Insert/Channel Assembly Deflector Assembly A	F 2-72
Rework-Channel and Insert	F 2-72.1
Installation — Chip Detector Assembly.	6-221
Installation — Chip Detectors — Transmission.	6-290
Installation — Chip Detectors.	6-196
Installation — Clock.	8-267
Installation — Closed Circuit Refueling Receiver.	10-33
Installation — Clutch Assembly — Freewheeling Assembly.	6-56
Installation — Cockpit Lights.	9-248
Installation — Collective Lever and Link Assembly.	5-173
Installation – Collective Pitch Linkage.	11-29
Installation — Collective Sticks.	11-11
Installation — Combustion Heater Assembly.	13-46
Installation — Combustion Heater Combustion Air Pressure Switch.	13-58
Installation — Combustion Heater Combustion Blower.	13-90
Installation — Combustion Heater Fuel Filter.	13-93
Installation — Combustion Heater Fuel Pressure Relief Valve.	13-96
Installation — Combustion Heater Fuel Pump.	13-100
Installation — Combustion Heater Fuel Shutoff Valve.	13-103
Installation — Combustion Heater Ignition Assembly.	13-66
Installation — Combustion Heater Plenum.	13-50
Installation — Combustion Heater Support Bracket.	13-54
Installation — Common Electrical Components.	9-367
Installation — Control Cable Assembly — Power Controls.	4-103
Gas Produce Control Installation	F 4-18
Power Controls — Droop Compensator N2	F 4-20
Power Controls — Gas Producer N1	F 4-19
Installation — Control Tubes.	11-122
Installation — Cover Assembly — Bellcrank Stop.	11-35
Installation — Cutter Blades (Lower).	2-338
Installation — Cutter Blades (Upper)	2-337
Installation — Cyclic Button Switch (S58 and S59).	9-145
Installation — Cyclic Control Friction Adjuster.	11-53
Installation — Cyclic Control Linkage.	11-79
Collective Pitch Control Parts Damage Limits (Sheet 1 of 3)	F 11-11.2
Collective Pitch Control Parts Damage Limits (Sheet 2 of 3)	F 11-11.2
Collective Pitch Control Parts Damage Limits (Sheet 3 of 3)	F 11-11-2
Collective Trunnion and Lever	F 11-11
Trunnion and Lever — Disassembled	F 11-11.1
Trunnion and Lever Assembly	F 11-11.3
Installation — Cyclic Control Stick Assembly.	11-47
Cyclic Stick and Friction Control (Sheet 2 of 2)	F 11-8
Cyclic Stick Assembly CS	F 11-7.1
Cyclic Stick Assembly (Sheet 1 of 2)C (Prior to compliance with MWO 55-1520-228-50-32)	F 11-7
Cyclic Stick Assembly (Sheet 2)C (After to compliance with MWO 55-1520-228-50-32)	F 11-7
Installation — Cyclic Stick Balance Spring.	11-91
Installation — Cyclic Stick Grip.	11-59
Installation — DC Ammeter.	8-275
Installation — Defogging Blower Motors (B7 and B8).	9-345
Installation – Detent Button.	11-17
Installation — Disc Assemblies.	6-178
Installation — Door Assemblies.	2-15
Installation — Door Seals.	2-12
Installation — Doublers.	2-358
Installation — Drag Pin.	6-82
Installation — Dust and Moisture Boot.	2-162
Installation — Engine Cowling.	2-49
Installation — Engine Mount Fittings.	4-22
Installation — Engine Mounts.	2-308
Engine Mount Leg Attaching Bolts	T 2-3
Installation — Engine Oil Pressure Indicator.	8-20
Installation — Engine Oil Temperature Indicator.	8-105
Installation — Engine Oil Temperature Transmitter Bulb.	8-113
Resistance Bulbs	T 8-5
Installation — Engine Out Warning Switch.	8-93
Installation — Exhaust System.	4-61
Engine Exhaust Stack	F 4-12
Inspection and Repair of Exhaust Stack	T 4-1
Installation — External Power Receptacle.	9-13
Installation — External Power Relay.	9-18
Installation — External Scavenge Oil Filter Assembly.	4-98.7
Installation — Fault Annunciator Panel.	9-331
Installation — Filter Bypass Valve.	6-241
Installation — Filter.	6-252
Installation — Fire Extinguisher.	17-8
Installation — First Aid Kit.	17-12
Installation — Fitting Assembly — Armament (Hard Points). A	2-222

Subject	Paragraph Figure, Table Number
Installation — Float Landing Gear	3-82
Installation — Force Gradient Assembly	11-68
Force Gradient	F 11-9
Installation — Forward and Aft Short Shafts	6-171
Installation — Forward Ballast. A	2-213
Installation — Forward Short Shaft	6-134
Oil Cooling Blower and Shaft Assembly	F 6-23
Installation — Frame Assembly	2-123
Installation — Free Air Temperature Indicator (Thermometer)	8-261
Installation — Freewheeling Assembly	6-33.f
Installation — Freewheeling housing	6-50
Installation — Fuel Boost Pump	9-81
Installation – Fuel Cell (Crashworthy Fuel System)	10-7.y
Fuel System — Crashworthy (Sheet 1 of 6)	F 10-1
Fuel System — Crashworthy (Sheet 2 of 6)	F 10-1
Fuel System — Crashworthy (Sheet 3 of 6)	F 10-1
Fuel System — Crashworthy (Sheet 4 of 6)	F 10-1
Fuel System — Crashworthy (Sheet 5 of 6)	F 10-1
Installation — Fuel Filter Assembly	10-59
Installation — Fuel Filter Element	10-60
Installation — Fuel Filter Pressure Switch	9-168
Installation — Fuel Pressure Switch	9-163
Installation – Fuel Shutoff Lever	10-46.4
Installation — Fuel Shutoff Valve (Crashworthy)	10-45.d
Fuel Drain Cock Assembly	F 10-6
Installation — Full Length Skid Shoe	3-22.5
Installation — Gas Producer Tachometer Generator	8-79
Installation — Gas Producer Tachometer Indicator	8-70
Installation — Generator Shunt	9-49
Installation — Governor Control Linear Actuator	4-115
Installation — Governor Control Switch	9-90
Installation — Grip Reservoirs and Sight Glass — Oil Lubricated Main Rotor Hub	5-73
Installation — Ground Handling Trucks	3-73
Ground Handling Trucks	F 3-16
Installation — Horizontal Stabilizer	2-263
Horizontal Stabilizer and Vertical Fin Installation	F 2-50
Vertical Fin Installation	F 2-51
Installation — Hydraulic Bypass Solenoid	9-114
Installation — Hydraulic Check Valve	7-78
Installation — Hydraulic Filters	7-66
Installation — Hydraulic Hoses, Lines, and Quick-Disconnects	7-72
Installation — Hydraulic Pump	7-19
Installation — Hydraulic Relief Valve	7-85
Installation — Hydraulic Reservoir	7-59
Installation — Idler Link Assembly and Collar Set	5-166
Installation — Ignition Switch	9-234
Installation — Inertia Reel Strap	2-118
Inertia Reel Strap Assembly Installation	F 2-17
Installation — Inertia Reel	2-113
Installation — Inner Ring (AVIM)	5-139
Installation — Input Pinion Housing Adapter and Seals. (AVIM)	6-89.g
Main Input Quill, Seal Installation	F 6-13
Installation — Inspection Panels	2-82
Installation — Instrument Panel, Shroud and Console	2-22
Installation — Instruments	8-7
Installation — Inverter	9-206
Troubleshooting — Inverter	T 9-8
Installation – Jackshaft	11-24
Installation — Jettison Mechanism (figure 2-3)	2-33
Installation — Landing Light Relays	9-267
Installation — Landing Lights	9-261
Installation — Lever	5-133
Installation — Light Flasher	9-319
Installation — Long Shaft	6-157
Shim Thickness	T 6-3
Typical Bearing Locations and Numbering	F 6-24
Installation — Low Level Switch (Crashworthy)	10-29
Installation — Low Level Switch	4-71
Installation — Low Pressure Sensing Switch	6-280
Installation — Lower Cutter Assembly	2-375
Removal — Lower Cutter Assembly	F 2-73
Installation — Magnetic Brake	11-74
Installation — Magnetic Compass (Standby)	8-226
Installation — Main Driveshaft	6-15
Installation — Main Rotor Assembly	5-10
Installation — Main Rotor Blade Bolt	5-90
Inspection and Repair Limits — Blade Bolt — Main Rotor	F 5-29
Installation — Main Rotor Blades	5-106
Installation — Main Rotor Pitch Horn Trunnion	5-95
Work Aid — Removal and Installation of Pitch Horn Trunnion	F 5-30
Installation — Main Transmission	6-73
Installation — Map and Data Case	2-147
Installation — Mast Assembly	6-99
Main Rotor Mast Build-up	F 6-17
Installation — Mounting Plate Bearing	9-102
Installation — Nonessential Bus Relay	9-73
Installation — NVG Position Lights	9-299
Installation — Oil Cooler	4-80
Oil Cooler Assembly	F 4-15
Installation — Oil Cooling Blower and Gearshaft Assembly	6-143.q
Installation — Oil Filter Head Assembly	6-236
Installation — Oil Nozzles (Jets)	6-285
Installation — Oil Selector (Bypass) Valve	4-91
Installation — Oil Tank Support Assembly	4-71.2
Installation — Oil Tank	4-69
Installation — Oil Transfer Tube	6-270
Installation — Outer Ring (AVIM)	5-145
Installation — Particle Separator	4-48

Subject	Paragraph Figure, Table Number
Installation — Passenger Seats.	2-95
Installation — Passive Defense. A	2-62
Installation — Pilot and Copilot Seats.	2-89
Installation — Pitch Horn, Main Rotor (AVIM).	5-30
Installation — Pitch link Assembly.	5-158.k
Pitch Link Assembly — Damage Limits	F 5-53
Installation — Pitot Heater System.	9-361
Installation — Pitot Tube.	8-162
Installation — Pitot-Static Piping and Fittings.	8-154
Installation — Pivot Sleeve. (AVIM).	5-127
Installation — Pocket Assembly.	2-156
Installation — Position Lights.	9-298
Installation — Power Controls.	4-109
Installation — Power Turbine Tachometer Generator.	8-61
Installation — Pressure Regulator Valve.	6-276
Installation — Pressure Switch.	7-53
Installation — Pylon Isolation Mount and Transmission Mount Support.	2-298
Installation — Pylon Supports.	2-288
Installation — Ram Air Duct.A	16-11
Installation — Remote Sensor.	13-18
Installation — Rod End Bearing.	9-105
Installation — Roll Staked Bearings (AVIM).	11-130
Installation — Rotor Tachometer Generator.	8-52
Installation — Sawtooth Blades Cutter Deflector (Upper).	2-329
Installation — Sawtooth Blades, Cutter Deflector (Lower).	2-330
Removal — Sawblade, Cutter Deflector (Upper and Lower)	F 2-67
Wire Strike Protection System (WSPS) Configuration A	F 2-65
Installation — Sawtooth Insert.	2-366
Installation — Seal Foam Assemblies.	2-314
Installation — Seals — Freewheeling Housing.	6-67
Installation — Seals.	6-21
Installation — Seat Belts.	2-102
Crew and Passenger Seat Belt Installation	F 2-14
Fastener Tape Location	F 2-15
Installation of Doubler to Passenger Seat Panel	F 2-16
Installation — Second Accumulator.	4-16
Installation — SENSOR, RPM.	8-87
Installation — Servoactuator Support.	7-47
Installation — Shaft Assembly — Freewheeling.	6-40
Installation — Shielded Ignition Lead Assembly.	13-85
Installation — Shoulder Harness.	2-107
Installation — Shunts and Bus Bars.	9-191
Installation — Sight Gage, Oil Level Assembly.	6-105
Installation — Solenoid Valve.	7-32
Installation — Soundproofing Blankets.	2-169
Installation — Spindle (Transmission).	6-111
Installation — Standard Landing Gear.	3-8
Standard Landing Gear — Skid Tube Repair Limits	F 3-4
Standard Landing Gear Fitting Assembly	F 3-3
Installation — Starter Relay.	9-219
Installation — Starter Switch.	9-224
Installation — Starter Systems.	9-214
Installation — Static Stop — Main Rotor Hub.	5-66
Installation — Stiffener.	2-387
Removal — Breakaway Tip	F 2-74
Removal — Channel, Sawtooth Insert and Upper Cutter Assembly C	F 2-79
Removal — Doublers and Saw Blade C	F 2-77
Removal — Stiffeners	F 2-75
Removal — Strut Assembly, Cutter Blades C	F 2-78
Work-Aids — WSPS — Channel Installation	F 2-76
Installation — Strut Assemblies, Lower.	2-346
Installation — Strut Assemblies, Upper.	2-345
Installation — Sump Valve (Crashworthy).	10-40
Installation — Support Assembly (Swashplate).	5-151
Installation — Support, Taillight.	2-281
Installation — Swashplate and Support Assembly.	5-121.h
Installation — Tail Rotor Blades.	5-246
Installation — Tail Rotor Control Linkage.	11-97
Installation — Tail Rotor Control Pedals and Adjuster.	11-108
Tail Totor Pitch Control Pedal Installation (Sheet 2 of 2)	F 11-13
Installation — Tail Rotor Driveshaft Cover.	2-257
Installation — Tail Rotor Driveshaft Segment — Typical.	6-165.g
Installation — Tail Rotor Driveshaft.	6-118
Installation — Tail Rotor Gearbox Input Seal.	6-214
Installation — Tail Rotor Gearbox Output Seal.	6-210
Installation — Tail Rotor Gearbox.	6-205
Installation — Tail Rotor Hub and Blade Assembly (with Dynamic Balance Wheel).	5-188.k
Tail Rotor — Static Stop — Damage Limits	F 5-56
Tail Rotor Knurled Nut — Damage Limits	F 5-57
Tail Rotor Spacer — Damage Limits	F 5-55
Installation — Tail Rotor Hub and Blade Assembly (without Dynamic Balance Wheel).	5-189.j
Installation — Tail Rotor Hub and Blade.	5-237.f
Installation — Tail Rotor Hub Trunnion.	5-220
Installation — Tail Rotor Hub.	5-203
Installation — Tail Rotor Pedal Assembly.	11-110
Installation — Tail Rotor Pitch Change Mechanism.	5-214
Installation — Tail Rotor Pitch Horn.	5-226
Installation — Tail Skid.	2-275
Installation — Tailboom.	2-250
Installation — Taillight.	9-308
Installation — Terminal Boards.	9-196
Installation — Thermocouple Resistor.	8-131
Installation — Torquemeter Indicator.	8-29

Subject	Paragraph Figure, Table Number
Installation — Transmission Fairing Assembly.	2-43
Installation — Transmission Oil Pressure Indicator.	8-290
Installation — Transmission Oil Pressure Switch.	9-173
Installation — Transmission Oil Pressure Transmitter.	8-299
Installation — Transmission Oil Pump.	6-231
Installation — Transmission Oil Temperature Switch.	6-247
Installation — Trunnion and Mixing/Lever Assembly.	11-81.4
Installation — Tube Assembly (Flexible).	2-236
Installation — Tube Assembly (Metal).	2-230
Installation — Turbine Outlet Temperature (TOT) Indicator.	8-127
Installation — Turn and Slip Indicator.	8-201
Installation — Upper Cutter Assembly.	2-352.j
Installation — Ventilating and Defogging Blower C	13-31
Installation — Ventilating and Defogging Ducts.	13-37
Installation — Ventilation Blower.	13-109
Installation — Vertical Fin.	2-269
Installation — Vertical Speed Indicator.	8-192
Installation — Vibrator.	13-72
Installation — Windshield and Windows.	2-137
Door Frame/Windshield Frame Assy Repair	F 2-23.1
Windshield Replacement A C Round Glass	F 2-23
Installation — Windshield Deflector Assembly.	2-364
Installation — Yoke/Shield — Main Rotor Hub (AVIM).	5-54
Installation - Battery and Tray (figure 9-2).	9-31
Battery and Tray Installation	F 9-2
Installation - Boost Pump (Crashworthy).	10-22
Installation - Boost Pump Cartridge (Crashworthy).	10-23.f
Installation - Engine Assembly.	4-33
Installation - Fuel Quantity Indicator.	8-240
Installation - Fuel Quantity Transmitters.	8-247
Installation - Generator Fail Relay.	9-67
Installation - Grips, Main Rotor (AVIM).	5-23
Installation - High Landing Gear.	3-43
High Landing Gear Crosstube Inspection Limits	F 3-10
High Landing Gear Step, Skid Shoe, and Ballast Installation	F 3-11
Installation - Line Control Relay.	9-61
Installation - Servoactuators (Cyclic and Collective).	7-39.a
Cyclic and Collective Servoactuator Installation	F 7-8
Installation - Start-Generator.	9-44
Installation - Tachometer Indicator.	8-43
Installation - Tail Rotor Blades.	5-254
Installation - Transmission Oil Temperature Switch.	9-158
Installation - Voltage Regulator.	9-56
Installation and Rigging — Anti-Icing Control.	4-53
Actuator Travel Limit Microswitch Adjustment	F 4-10
Alteration of Engine Anti-Ice Clevis	F 4-11
Anti-Icing Control	F 4-9
Installation and rigging — Connecting Link Assembly	12-10
Installation of Increased Capacity Battery. (22 AMP)	9-31.1.i
Installation.	2-320
Rework Necessary if AN/ARC-51 is Mounted to Bulkhead, Seal, Foam Assembly (Fire Suppressant Foam Assemblies)	F 2-64
Installation/Reassembly — Skid Tubes — High Landing Gear.	3-50
Installation/Reassembly - Crosstubes - Standard Landing Gear.	3-30
INSTALLATION/REPAIR — TRUNNION THRUST PLATES — MAIN ROTOR.	5-47.1
INSTRUMENT MAINTENANCE.	8-1
INSTRUMENT PANEL, SHROUD AND CONSOLE.	2-16
INSTRUMENTS.	E-21.b
Insulation — Turbine Outlet Temperature Indicator.	8-144
Troubleshooting — Turbine Outlet Temperature Indicating System C	T 8-7
INTERCHANGE OF STANDARD GEAR WITH HIGH LANDING GEAR.	3-69
High Gear Interchange with Standard Gear	F 3-15
Repair of Landing Gear Skid Tube Shoes	F 3-14
Interior — Cleaning.	1-17
Interior Lights System — Wiring Diagram A	F F-13
Interior Lights System — Wiring Diagram A (After compliance with MWO 55–1520–228–50/22 NVG)	F F-14
Exterior Lights System — Wiring Diagram A (Use for Rewired Lights)	F F-15
Interior Lights System — Wiring Diagram (Sheet 1 of 3) C	F F-35
Interior Lights System — Wiring Diagram (Sheet 2) C	F F-35
Interior Lights System — Wiring Diagram (Sheet 3) C	F F-35
Crashworthy Fuel System — Wiring Diagram C	F F-37
Engine Auto Relight System — Wiring Diagram C	F F-38
Exterior NVG Position Light — Wiring Diagram C	F F-36
IR/White Dual Landing Light/Searchlight — Wiring Diagram C (After Compliance wth MWO 55–1520–228–50–31/32)	F F-41
Proximity Warning System — Wiring Diagram C	F F-39
INTERIOR LIGHTS SYSTEM.	9-237

Subject	Paragraph Figure, Table Number
INTERSYSTEM OIL LEAKAGE	4-95
INTRODUCTION	1-51
INVENTORIABLE ITEMS	C-3
INVERTER	9-199
IR/White (Dual) Landing/Searchlight A C	9-268

J

Subject	Paragraph Figure, Table Number
Jacking	1-38
OH-58 A & C Paved Surface Mooring Configuration	F 1-6.1
Tie-Down and Mooring Hardware	T 1-5
JACKSHAFT	11-18
JETTISON MECHANISM	2-28

L

Subject	Paragraph Figure, Table Number
LANDING GEAR SUPPORT FITTINGS	2-315
LANDING GEAR	E-23.b
LANDING LIGHT RELAYS	9-262
LANDING LIGHTS	9-253
Left and Right Hand Pylon Support Straps (AVIM)	2-207.1
LEVELING	1-45
Helicopter Leveling Plates	F 1-7
LEVER	5-128
LIGHTING PROVISION	9-235
Limitations — Honeycomb Panel Major Edge Damage (figure 2-42)	2-192
Limitations — Honeycomb Panel Minor Edge Damage (figure 2-42)	2-189
Limitations — Major Panel Damage	2-186
Limitations — Minor Panel Damage	2-182
Honeycomb Panels — Minor Damage Repair	F 2-40
Limitations — Negligible Honeycomb Panel Damage	2-179
LINE CONTROL RELAY (K12)	9-57
LIST OF CONSUMABLE MATERIALS	1-27
Load Analysis Chart (Sheet 1 of 3)	F F-23
Load Analysis Chart (Sheet 2)	F F-23
Load Analysis Chart C (Sheet 3)	F F-23
Attitude Indicator and Turn Rate Gyro System (501–1660–01, Attitude Reference System) — Wiring Diagram C	F F-23.1
Engine Oil and Turbine Outlet Temperature Indicating Systems — Wiring Diagram C	F F-27
Fuel Quantity Indicating System — Wiring Diagram C	F F-26
Inverter, Attitude Gyro, and Turn and Slip Indicator Systems — Wiring Diagrams A	F F-4
Inverter, Attitude, and Turn and Slip Indicator Systems —Wiring Diagram C	F F-24
Tachometer Indicator Systems — Wiring Diagram C	F F-25
Tachometer Indicator Systems — Wiring Diagrams A	F F-5
LONG SHAFT	6-151
LOW LEVEL SWITCH (CRASHWORTHY)	10-24
LOW PRESSURE SENSING SWITCH	6-277
LOWER CUTTER ASSEMBLY	2-370
Lubrication — Aft Short Shaft	6-146
Lubrication — Forward Short Shaft	6-130
Lubrication — Long Shaft	6-153
Lubrication — Tail Rotor Driveshaft	6-114
Driveshafts - Tail Rotor (Forward Short Shaft Typical	F 6-18
LUBRICATION REQUIREMENTS	1-33

M

Subject	Paragraph Figure, Table Number
MAGNETIC BRAKE	11-69
MAGNETIC BRAKES (L4, L5)	9-124
MAGNETIC COMPASS (STANDBY)	8-220
MAIN DRIVESHAFT	6-7
MAIN ROTOR ASSEMBLY	5-1
MAIN ROTOR BLADE BOLT	5-85
MAIN ROTOR BLADES	E-20.a
MAIN ROTOR CONTROLS	5-108
MAIN ROTOR HUB AND MAST ASSEMBLY	E-36.b
MAIN ROTOR HUB	5-11
MAIN ROTOR PITCH HORN TRUNNION	5-91
MAIN TRANSMISSION	6-68
MAINTENANCE ALLOCATION CHART	B-1
MAINTENANCE OF FORMS AND RECORDS	P-5
MAINTENANCE OF PRESERVATION DURING FLYABLE STORAGE	E-12
MAINTENANCE OF PRESERVATION	E-25.b
Maintenance Precautions — Engine Assembly	4-28
Installation of Electrical Cable Assembly Engine	F 4-5
Major Panel Damage — Limits and Repair. (AVIM)	2-184
MAP AND DATA CASE	2-144
MAST ASSEMBLY	6-90
Metal Particles Contamination — Transmission, Freewheeling Unit and Tail Rotor Gearbox	6-4
Drive Train System (Prior to MWO 55-1520-228-50-25)	F 6-1
Metal Particles Contamination	T 6-2
METAL TUBE ASSEMBLY	4-10
MISCELLANEOUS EQUIPMENT	9-332
MODES OF STORAGE	E-3
Mooring, Paved Surface	1-40.1
Mooring, Unpaved Surface	1-40.2
MOUNTING PLATE BEARING — LINEAR ACTUATOR	9-99

Subject — Paragraph, Figure, Table Number

N

Negligible Honeycomb Panel Damage — Limits and Repair. 2-178
Night Vision Goggles System — Wiring Diagram C (After Compliance with MWO 55–1520–225–50–32) F F-31
Night Vision Goggles System — Wiring Diagram C (Prior to Compliance with MWO 55–1520–225–50–32) . . . . . F F-32
Transmission Oil Ppressure Indicating System C . . F F-33
NIGHT VISION GOGGLES SYSTEM. C 9-385
NONESSENTIAL BUS RELAY. 9-69

O

OIL COOLER. 4-72
OIL COOLING BLOWER AND SHAFT ASSEMBLY. 6-135
OIL FILTER HEAD ASSEMBLY. 6-232
OIL NOZZLES (JETS). 6-281
OIL SELECTOR (BYPASS) VALVE. 4-81
OIL SUPPLY SYSTEM HOSES, FITTINGS, AND TUBING. 4-92
OIL SYSTEM. 4-62
OIL TANK 4-64
OIL TRANSFER TUBE. 6-264
Operation — Flight Control. 7-5
Hydraulic System . . . . . F 7-1
Hydraulic System Schematic . . . . . F 7-2
Operational Check — Main Rotor Assembly. 5-3
Operational Check — Tail Rotor Gearbox. 6-206
Operational Checks — Power Plant. 4-6
Operational Test — Combustion Heater Ignition Assembly. 13-65
Igniter Plug Gap Fixture . . . . . F 13-8
Operational Test Circuit . . . . . F 13-7
Vibrator Performance Chart . . . . . F 13-6
Operational Test — Shielded Ignition Lead Assembly. 13-80
OUTER RING. 5-140
OVERHEAT SWITCH. 13-24.1

P

Painting — Tail Rotor Blades. 5-247
PAINTING - TOUCH UP. 1-24
Painting Requirement — Main Rotor Blade. 5-107
Parking. 1-39
PART NUMBER INDEX . . . . . F D-67
Hose Assembly . . . . . F D-174
Wire Harness . . . . . F D-173
PARTICLE SEPARATOR. 4-42
PASSENGER SEATS. 2-90
PASSIVE DEFENSE. A 2-55
PERIODS OF INVENTORY. C-4
PILLOW BLOCK — MAIN ROTOR YOKE. 5-74
PILOT AND COPILOT SEATS. 2-84
Pilots' Collective Stick Serviceability Verification. 11-10.1
PITCH HORN — MAIN ROTOR. 5-24
PITCH LINK ASSEMBLY. 5-152
PITOT HEATER SYSTEM. 9-354
PITOT TUBE 8-156
PITOT TUBE HEATER. 9-384
PITOT-STATIC PIPING AND FITTINGS. 8-148
PITOT-STATIC SYSTEM. 8-145
PIVOT SLEEVE. 5-122
Plexiglass - Cleaning. 1-20
POCKET ASSEMBLY. 2-151
Position — Disc Assembly 6-126
Long Driveshaft Installation — Tail Rotor (Hard Type) . . . . . F 6-20
Long Driveshaft Installation — Tail Rotor (Spring Type) . . . . . F 6-21
POSITION LIGHTS. 9-284
POWER CONTROLS. 4-99
POWER PLANT. 4-2
POWER TRAIN SYSTEM. E-15.a
POWER TRAIN. E-7.c
POWER TURBINE TACHOMETER GENERATOR. 8-53
Precautions in Fuel Servicing and Defueling. 1-4
Preparation for Removal — Engine Assembly. 4-29
Preparation for Shipment or Storage — Main Transmission. 6-74.h
PREPARATION OF BONDING SURFACES. 2-174
PREPARATION OF HONEYCOMB CORE PLUG. (AVIM) 2-175
PRESSURE REGULATOR VALVE. 6-271
PRESSURE SWITCH. 7-48
Primary Directional Control Vulnerability Reduction System — Wiring Diagram C (Also Applicable on Helicopters with MWO 55–1520–228–50–18 Incorporated) . . . . . F F-30
PRIMARY DIRECTIONAL CONTROL VULNERABILITY REDUCTION SYSTEM (ELECTRICAL). C 9-119
PROCEDURES COMMON TO ALL MODES OF STORAGE. E-4
PYLON ISOLATION MOUNT AND TRANSMISSION MOUNT SUPPORT. 2-289
PYLON SUPPORTS (Figure 2-55). 2-282

Q

QUALITY ASSURANCE/QUALITY CONTROL (QA/QC) P-2

Subject	Paragraph Figure, Table Number
R	
Radar Altimeter with Voice Warning (After compliance with MWO 1-1520-228-50-52)	8-183.1
RAM AIR DUCT. A	16-6
RE-USE OF SELF-LOCKING NUTS	1-26
Reassembly — Air Mixing Valve (AVIM)	13-11
Reassembly — Combustion Heater Ignition Assembly	13-64
Reassembly — Cyclic Stick Grip Assembly	9-139
Reassembly — Fault Annunciator Panel. (AVIM)	9-330
Reassembly — Force Gradient Assembly	11-67
Reassembly — Mixing lever/Trunnion and Lever — Cyclic Control Linkage	11-84
Reassembly — Oil Cooling Blower and Shaft Assembly	6-142.a
Reassembly — Passive Defense. A	2-61
Reassembly — Shielded Ignition Lead Assembly	13-84
Reassembly — Trunnion and Lever Assembly	11-81.3
Refinishing — Main Rotor Blade (AVIM)	5-105
REMARKS (Section IV)	B-8
REMOTE SENSOR	13-13
Removal	2-317
Removal — Aft Ballast	2-215
Removal — Aft Fairing. A	2-66
Removal — Aft Short Shaft	6-148
Removal — Air Duct Hose Assembly	6-261
Removal — Air Mixing Valve	13-7
Removal — Airspeed Indicator	8-172
Removal — Altimeters	8-181
Removal — Anti-Icing Lever	12-14
Removal — Anticollision Lights	9-315
Removal — Armament Electrical System	9-381
Removal — Armament Subsystem M27E1	16-4
Removal — Ash Tray	2-149
Removal — Attitude Indicator	8-208
Removal — Attitude/Turn and Slip Indicator	8-217
Removal – Auxiliary Fuel Cell	10-10
Removal — Avionics Compartment Door. A C	2-76
Removal — Avionics Compartment Floor	2-240
Removal — Battery Relay	9-35
Removal — Beam Upper Cabin Roof	2-26
Removal — Bearings — Freewheeling Assembly	6-60
Removal — Bellcranks, Levers, and Walking Beams	11-115
Removal — Bleed Air Heater Plenum	13-22
Removal — Bleed Air Heater System	9-351
Removal — Bleed Air Installation	4-37
Removal — Bolt and Blade Latch Retainer	5-58
Removal – Bonding Strap (Crashworthy)	10-50.a
Removal — Boost Pump (Crashworthy)	10-20
Removal — Boost Pump Cartridge (Crashworthy)	10-21.e
Removal — Breakaway Tip	2-379
Removal — Brushes	13-106
Removal — Cargo Platform	2-140
Removal — Channel	2-367
Removal — Chip Detector Assembly	6-219
Removal — Chip Detectors — Transmission	6-288
Removal — Chip Detectors	6-194
Maximum Internal Corrosion Removal Limits For Tail Rotor Gearbox Input Pinion Gear	F 6-32
Removal — Clock	8-266
Removal — Closed Circuit Refueling Receiver	10-32
Removal — Clutch Assembly — Freewheeling Assembly	6-54
Removal — Cockpit Lights	9-246
Removal – Collective Pitch Linkage	11-22
Removal — Collective Sticks	11-9
Removal — Combustion Heater Assembly	13-45
Removal — Combustion Heater Combustion Air Pressure Switch	13-57
Removal — Combustion Heater Combustion Blower	13-88
Removal — Combustion Heater Fuel Filter	13-92
Removal — Combustion Heater Fuel Pressure Relief Valve	13-95
Removal — Combustion Heater Fuel Pump	13-99
Removal — Combustion Heater Fuel Shutoff Valve	13-102
Removal — Combustion Heater Ignition Assembly	13-61
Removal — Combustion Heater Plenum	13-49
Removal — Combustion Heater Support Bracket	13-53
Removal — Combustion Heater Ventilation Air Blower	13-104
Removal — Common Electrical Components	9-366
Removal — Connecting Link Assembly	12-8
Removal — Control Cable Assembly — Power Controls	4-102.k
Removal — Control Tubes	11-120
Removal — Controllable Landing Light	9-282
Removal – Copilot Collective Stick Elbow	11-11.3
Removal – Cover Assembly – Bellcrank Stop	11-33
Removal — Cutter Blades (Lower)	2-335
Removal — Cutter Blades (Upper)	2-334
Removal — Cyclic Button Switch (S58 and S59)	9-143
Removal — Cyclic Control Friction Adjuster	11-51
Removal — Cyclic Control Linkage	11-78
Removal — Cyclic Control Stick Assembly	11-44
Removal — Cyclic Stick Grip Assembly	9-134
Removal — Cyclic Stick Grip	11-57
Removal — DC Ammeter	8-273
Removal — Defogging Blower Motors (B7 and B8)	F 9-22
Defogging Blower Motors (B7 and B8) A	F 9-22
Removal – Detent Button	11-15
Removal — Disc Assemblies	6-177
Removal — Disc Assembly	6-122
Aft Disc Assemblies	F 6-19

Subject	Paragraph Figure, Table Number
Removal — Door Assemblies.	2-7
Removal — Door Seals.	2-8
Removal — Doublers.	2-356
Removal — Doublers A	F 2-71
Removal — Drag Pin.	6-79
Drag Pin Installation	F 6-11
Removal — Dust and Moisture Boot.	2-160
Removal — Engine Anti-Icing Control.	4-52
Removal — Engine Assembly.	4-30
Removal — Engine Cowling.	2-47
Removal — Engine Mount Fittings.	4-20
Removal — Engine Mounts.	2-305
Removal — Engine Oil Pressure Indicator.	8-18
Removal — Engine Oil Temperature Indicator.	8-103
Removal — Engine Oil Temperature Transmitter Bulb.	8-110
Removal — Engine Out Warning Switch.	9-185
Removal — Exhaust System	4-58
Removal — External Power Receptacle.	9-12
Removal — External Power Relay.	9-17
Removal — External Scavenge Oil Filter Assembly.	4-98.4
Removal — External Scavenge Oil Filter Element.	4-98.8
Removal — Fault Annunciator Panel.	9-325
Removal — Filter Bypass Valve.	6-239
Removal — Filter.	6-250
Removal — Fire Extinguisher and Bracket.	17-5
Removal — First Aid Kit.	17-11
Removal — Fitting Assembly — Armament (Hard Points). A	2-220
Removal — Float Landing Gear.	3-78
Removal — Force Gradient Assembly.	11-63
Removal — Forward and Aft Short Shafts.	6-170
Removal — Forward Ballast. C	2-212
Removal — Forward Short Shaft.	6-132
Removal — Frame Assembly.	2-121
Removal — Freewheeling Assembly.	6-25
Freewheeling Assembly	F 6-7
Removal — Fuel Boost Pump System.	9-80
Removal — Fuel Cell (Crashworthy Fuel System).	10-6.k.1
Removal – Fuel Filter Assembly.	10-54
Removal – Fuel Filter Element.	10-55
Removal — Fuel Filter Pressure Switch.	9-166
Removal — Fuel Pressure Switch.	9-161
Removal – Fuel Shutoff Lever.	10-46.2
Removal — Fuel Shutoff Valve (Crashworthy).	10-43
Removal — Full Length Skid Shoe.	3-22.4
Removal — Gas Producer Tachometer Generator.	8-77
Removal — Gas Producer Tachometer Indicator.	8-68
Removal — Generator Shunt.	9-48
Removal — Governor Control Linear Actuator.	4-114
Removal — Governor Control Switch.	9-89
Removal — Grip Reservoirs and Sight Glass — Oil Lubricated Main Rotor Hub.	5-70
Removal — Grip, Main Rotor (AVIM).	5-16
Removal — Ground Handling Trucks.	3-72
Removal — Horizontal Stabilizer.	2-261
Removal — Housing Assembly.	6-44
Removal — Hub Strap/Pin/Fitting and Ring — Main Rotor.	5-33
Removal — Hydraulic Bypass Solenoid.	9-113
Removal — Hydraulic Check Valve.	7-76
Removal — Hydraulic Filters.	7-64
Removal — Hydraulic Hoses, Lines, and Quick-Disconnects.	7-70
Removal — Hydraulic Pump.	7-13
Removal — Hydraulic Relief Valve.	7-83
Removal — Hydraulic Reservoir.	7-57
Removal — Idler Link Assembly and Collar Set.	5-162
Removal — Ignition Switch.	9-233
Removal — Inertia Reel Strap.	2-117
Removal — Inertia Reel.	2-111
Removal — Inner Ring (AVIM).	5-137
Removal — Input Pinion Housing Adapter and Seals. (AVIM)	6-86
Removal — Inspection Panels.	2-81
Removal — Instrument Panel, Shroud and Console.	2-20
Removal — Instruments.	8-5
Removal — Inverter.	9-204
Removal — IR/White (Dual) Landing/Searchlight.	9-274
Removal – Jackshaft.	11-21
Idle Detent Replacement	F 11-3
Removal — Jettison Mechanism.	2-31
Removal — Landing Light Relays.	9-265
Removal — Landing Lights.	9-259
Removal — Lever.	5-131
Removal — Light Flasher.	9-316
Removal — Long Shaft.	6-155
Removal — Low Level Switch (Crashworthy).	10-27
Removal — Low Level Switch (Figure 4-13).	4-70
Engine Oil Filter External Scavenge Oil Filter	F 4-13.1
Engine Oil System	F 4-13
Removal — Low Pressure Sensing Switch.	6-279
Removal — Lower Cutter Assembly.	2-373
Removal — Magnetic Brake.	11-72
Removal — Main Driveshaft.	F 6-2
Main Driveshaft	F 6-2
Removal — Main Rotor Assembly.	5-8
Removal — Main Rotor Blade Bolt.	5-87
Removal — Main Rotor Blades.	5-100
Main Rotor Blade Drain Hole	F 5-33.1
Repair Areas — Main Rotor Blades	F 5-34
Removal — Main Rotor Pitch Horn Trunnion.	5-94
Removal — Main Transmission.	6-71
Main Transmission	F 6-10

Subject	Paragraph Figure, Table Number
Removal — Map and Data Case	2-146
Removal — Mast Assembly	6-93
Removal — Micron Oil Filter Element	6-252.4
Removal — Mounting Plate Bearing	9-100
Removal — Nonessential Bus Relay	9-72
Removal — NVG Position Lights	9-296
Removal — Oil Cooler	6-255
Engine Oil Cooler	F 4-14
Removal — Oil Cooling Blower and Shaft Assembly	6-139.c
Removal — Oil Filter Head Assembly	6-234
Removal — Oil Nozzles (Jets)	6-283
Removal — Oil Selector (Bypass) Valve	4-86
Removal — Oil Tank Support Assembly	4-71.1
Removal — Oil Tank	4-67
Removal — Oil Transfer Tube	6-266
Removal — Outer Ring (AVIM)	5-143
Removal — Overheat Switch	13-24.3
Removal — Particle Separator	4-46
Removal — Passenger Seats	2-93
Removal — Passive Defense. A	2-58
Removal — Pillow Block — Main Rotor Yoke (AVIM)	5-79
Removal — Pilot and Copilot Seats	2-87
Removal — Pilot Collective Stick Elbow	11-11.1
Removal — Pitch Horn, Main Rotor. (AVIM)	5-26
Removal — Pitch Link Assembly	5-155
Removal — Pitot Heater System	9-359
Removal — Pitot Tube	8-160
Removal — Pitot-Static Piping and Fittings	8-152
Removal — Pivot Sleeve (AVIM)	5-125
Removal — Pocket Assembly	2-154
Removal — Position Lights	9-295
Removal — Power Controls	4-108
Removal — Power Turbine Tachometer Generator	8-59
Removal — Pressure Regulator Valve	6-274
Removal — Pressure Switch	7-51
Removal — Pylon Isolation Mount and Transmission Mount Support	2-293
Removal — Pylon Supports	2-285
Removal — Ram Air Duct. A	16-9
Removal — Remote Sensor	13-15
Removal — Rod End Bearing	9-104
Removal — Roll Staked Bearings (AVIM)	11-129
Removal — Rotor Tachometer Generator	8-50
Removal — Sawtooth Blades Cutter Deflector (Lower)	2-327
Removal — Sawtooth Blades, Cutter Deflector (Upper)	2-326
Removal — Sawtooth Insert	2-365
Removal — Seal Foam Assembly	2-311
Removal — Seals — Freewheeling Housing	6-65
Removal — Seals	6-19
Removal — Seat Belts	2-101
Removal — Second Accumulator	4-14
Removal — SENSOR, RPM	8-85
Removal — Shaft Assembly — Freewheeling	6-38
Removal — Shielded Ignition Lead Assembly	13-81
Removal — Shoulder Harness	2-106
Removal — Shunts and Bus Bars	9-189
Removal — Sight Gage, Oil Level Assembly	6-103
Removal — Skid Shoe Assembly — High Landing Gear	3-54
Removal — Skid Shoe Assembly — Standard Landing Gear (Figure 3-9)	3-20
Removal — Skid Tubes — Standard Landing Gear	3-13
Removal — Solenoid Valve	7-25
Removal — Solenoid	7-23
Solenoid Valve	F 7-5
Removal — Soundproofing Blankets	2-166
Removal — Spindle (Transmission)	6-109
Removal — Standard Landing Gear	3-6
Modified Crosstube	F 3-1.1
Standard Landing Gear Crosstube Inspection Limits	F 3-2
Removal — Starter Relay	9-218
Removal — Starter Switch	9-223
Removal — Starter System	9-213
Removal — Starter-Generator	9-42
Removal — Static Stop — Main Rotor Hub	5-63
Removal — Stiffeners	2-385
Removal — Strut Assemblies, Lower	2-343
Removal — Strut Assembly, Upper	2-342
Removal — Sump Valve (Crashworthy)	10-37
Removal — Support Assembly (Swashplate)	5-149
Removal — Support, Taillight	2-279
Support, Taillight Installation	F 2-54
Removal — Swashplate and Support Assembly	5-114
Removal — Tail Rotor Blades	5-251
Removal — Tail Rotor Control Linkage	11-95
Removal — Tail Rotor Control Pedals and Adjuster	11-107
Removal — Tail Rotor Driveshaft Cover	2-254
Removal — Tail Rotor Driveshaft Segment — Typical	6-162
Removal — Tail Rotor Driveshaft	6-116
Removal — Tail Rotor Gearbox Input Seal	6-212
Removal — Tail Rotor Gearbox Output Seal	6-208
Removal — Tail Rotor Gearbox	6-203.f
Tail Rotor Gearbox (After Incorporation of MWO 55-1520-228-50-25)	F 6-36
Tail Rotor Gearbox Mounting (After Incorporation of MWO 55-1520-228-50-25)	F 6-35
Tail Rotor Gearbox Seal Replacement	F 6-34
Removal — Tail Rotor Hub and Blade Assembly	5-183
Removal — Tail Rotor Hub Trunnion	5-217
Removal — Tail Rotor Hub	5-196
Removal — Tail Rotor Pedal Assembly	11-109
Removal — Tail Rotor Pitch Change Mechanism	5-208

Subject	Paragraph Figure, Table Number
Removal — Tail Rotor Pitch Horn.	5-223
Removal — Tail Skid.	2-273
Removal — Tailboom. C	2-248
Removal — Taillight.	9-306
Removal — Terminal Boards.	9-194
Removal — Torquemeter Indicator.	8-27
Removal — Transmission Fairing Assembly C	2-40
Removal — Transmission Oil Pressure Indicator.	8-288
Removal — Transmission Oil Pressure Switch.	9-171
Removal — Transmission Oil Pressure Transmitter.	8-297
Removal — Transmission Oil Pump.	6-230
Removal — Transmission Oil Temperature Switch.	6-245
Removal — Trunnion — Main Rotor (AVIM).	5-43
Main Rotor Hub Trunnion Centering	F 5-21
Removal — Trunnion and Mixing/Lever Assembly.	11-81.1
Removal — Tube Assembly (Flexible).	2-234
Removal — Tube Assembly (Metal).	2-228
Removal — Turbine Outlet Temperature (TOT) Indicator.	8-125
Removal — Turbine Outlet Temperature Indicator.	8-142
Removal — Turn and Slip Indicator.	8-199
Removal — Upper Cutter Assembly.	2-350
Removal — Ventilating and Defogging Blower A	13-28
Removal — Ventilating and Defogging Ducts.	13-35
Removal — Vertical Fin and Supports.	2-267
Repair Limits — Aft Vertical Fin Support	F 2-53
Repair Limits — Forward Vertical Fin Support	F 2-52
Removal — Vertical Speed Indicator.	8-190
Removal — Vibrator.	13-70
Removal — Windshield Deflector Assembly.	2-362
Removal — Windshields and Windows.	2-135
Windows — Critical Areas Diagram	F 2-21
Windshields and Cabin Roof Windows — Critical Areas Diagram C Flat Glass	F 2-20
Windshields and Cabin Roof Windows — Critical Areas Diagram A C Round Glass	F 2-19
Windshields and Cabin Roof Windows Replacement C Flat Glass	F 2-22
Removal — Yoke/Shield — Main Rotor Hub.	5-51
Removal - Fuel Quantity Indicator.	8-238
Removal - Fuel Quantity Transmitters.	8-245
Removal - Generator Fail Relay.	9-66
Removal - High Landing Gear.	3-41
Removal - Line Control Relay.	9-60
Removal - Servoactuator (Cyclic and Collective).	7-37
Removal - Servoactuator Support.	7-44
Servoactuator Support Assembly Installation	F 7-9
Removal - Tachometer Indicator.	8-41
Removal - Transmission Oil Temperature Switch.	9-156
Removal - Voltage Regulator.	9-54
Removal (Permanent) — Armor Panels.	2-128
Pilot and Copilot Armor Installation	F 2-18
Removal (Temporary) — Armor Panels.	2-127
Removal and Disassembly — Cyclic Control Linkage.	11-81
Removal of Paint and Primer from Honeycomb Panels. (AVIM)	2-177
Removal.	3-33
Removal/Disassembly — Crosstubes Standard — Landing Gear.	3-27
Removal/Disassembly — Skid Tubes — High Landing Gear.	3-47
Removal—Free Air Temperature Indicator (Thermometer).	8-259
Removal—Pressure Switch.	8-251
REMOVE — 3-MICRON OIL FILTER ASSEMBLY (figure 6-40.1).	6-252.6
Remove — Auxiliary Power Receptacle (J120).	9-373
Remove — Collective Lever and Link Assembly.	5-170.b
Remove — Cyclic Stick Balance Spring.	11-90
Remove — Left and Right Hand Pylon Support Straps.	2-207.2
Remove - Battery.	9-29
Repair — Aft Fuselage Assembly. (AVIM)	2-207
Repair — Aft Short Shaft.	6-149
Repair — Air Duct Hose Assembly.	6-262
Repair — Airspeed Indicator.	8-173
Repair — Altimeters.	8-182
Repair — Anticollision Lights.	9-317
Repair – Auxiliary Fuel Cell (AVIM).	10-11
Repair — Avionics Compartment Door.	2-77
Repair — Avionics Compartment Floor.	2-241
Repair — Balljoint Connector — Power Controls.	4-102.13
Repair — Beam Upper Cabin Roof.	2-27
Repair — Bearings — Freewheeling Assembly.	6-61
Repair — Bleed Air Heater Plenum.	13-23
Repair — Bolt and Blade Latch Retainer.	5-59
Repair — Breakaway Tip.	2-380
Repair — Clutch Assembly — Freewheeling Assembly.	6-55
Repair — Cockpit Lights.	9-247
Repair — Collective Lever and Link Assembly.	5-172
Repair — Combustion Heater Combustion Blower.	13-89
Repair – Cover Assembly – Bellcrank Stop.	11-34
Cover Assembly — Bellcrank Stop	F 11-4
Cyclic Controls C	F 11-5
Repair — Crosstubes — High Landing Gear.	3-67
Aft Crosstube Support Assembly	F 3-12
High Landing Gear Skid Tube Repair Limits	F 3-13
Repair — Crosstubes — Standard Landing Gear.	3-28.c
Alternate Full Length Skid Shoe	F 3-9.1
Repair — Cutter Blades (Upper and Lower).	2-336
Repair — Cyclic Control Friction Adjuster.	11-52
Repair — Cyclic Control Stick Assembly.	11-46

Subject	Paragraph Figure, Table Number
Cyclic Stick Assembly A	F 11-6
Repair — Cyclic Stick Grip.	11-58
Repair – Detent Button.	11-16
Repair — Disc Assembly.	6-125
Repair — Doublers.	2-357
Repair — Drag Pin (AVIM).	6-81
Repair — Drip Pan and Frame Assembly.	2-54
Repair — Dust and Moisture Boot.	2-161
Auxiliary Equipment	F 2-27
Cargo Platform Installation	F 2-26
Repair — Engine Cowling.	2-48
Forward Fairing Repair C	F 2-12
Repair — Engine Mount Fittings.	4-21
Repair — Engine Mounts.	2-307
Repair — Engine Oil Temperature Transmitter Bulb.	8-111
Repair — External Scavenge Oil Filter Assembly.	4-98.6
Repair — Fairing.	2-68
Repair — Fault Annunciator Panel. (AVIM)	9-329
Repair — Firewall.	2-200
Repair — Fitting Assembly.	3-29
Repair — Float Landing Gear.	3-80
Repair — Forward Short Shaft.	6-133
Repair — Frame Assembly.	2-122
Repair — Freewheeling Assembly. (AVIM)	6-30
Repair – Fuel Filter Assembly.	10-58
Bleeding Airframe Fuel Filter Assembly	F 10-8
Fuel Filter Assembly—Exploded View	F 10-7
Repair — Governor Control Linear Actuator. (AVIM)	9-96
Repair — Grip Buffer Plate (AVIM).	5-21
Repair — Grip Reservoirs and Sight Glass — Oil Lubricated Main Rotor Hub.	5-72
Repair — Grips, Main Rotor (AVIM).	5-20
Repair — Honeycomb Panel Major Edge Damage (figure 2-42).	2-193
Repair — Honeycomb Panel Minor Edge Damage (figure 2-42).	2-190
Honeycomb Panels — Edge Damage Repairs	F 2-42
Repair — Honeycomb Panels — General.	2-173
Repair — Horizontal Stabilizer.	2-262
Repair — Housing Assembly. (AVIM)	6-48
Repair — Hub Strap/Pin/Fitting and Ring — Main Rotor (AVIM).	5-35
Repair — Inertia Reel.	2-112
Repair — Input Pinion Cork Seal. (AVIM)	6-89.1
Repair — Input Pinion Housing Adapter and Seals. (AVIM)	6-88
Repair — Instrument Panel, Shroud and Console.	2-21
Repair — Landing Light Relays.	9-266
Repair — Landing Lights.	9-260
Repair — Lever.	5-132
Repair — Long Shaft.	6-156
Repair — Lower Cutter Assembly.	2-374
Repair — Magnetic Compass (Standby).	8-225
Repair — Main Rotor Assembly.	5-7
Repair — Main Rotor Blade Bolt.	5-89
Repair — Main Rotor Blades — Corrosion.	5-102
Repair — Main Rotor Blades (Patching) (AVIM).	5-103
Repair — Main Rotor Blades Wear and Grip Pads.	5-104
Repair — Main Transmission.	6-72
Repair — Major Panel Damage.	2-187
Honeycomb Panels — Major Damage Repair	F 2-41
Repair — Mast Assembly. (AVIM)	6-97
Mast Repair Areas and Limits	F 6-16
Repair — Minor Panel Damage.	2-183
Repair — Negligible Honeycomb Panel Damage.	2-180
Repair — Oil Cooling Blower and Shaft Assembly.	6-141
Repair — Oil Selector (Bypass) Valve. (AVIM)	4-89
Repair — Oil Tank.	4-68
Repair — Oil Transfer Tube.	6-269
Repair — Outer Ring.	5-144
Repair — Particle Separator.	4-47
Cross-section of Particle Separator	F 4-8
Repair — Passenger Entrance SCUFF PLATES.	2-11
Passenger Entrance — Scuff Plate Repair	F 2-7
Right Front Door	F 2-8
Repair — Passenger Seats.	2-94
Repair — Pillow Block — Main Rotor Yoke (AVIM).	5-83
Repair — Pillow Block — Main Rotor Yoke.	5-78
Repair — Pilot and Copilot Seats.	2-88
Repair — Pitch Horn, Main Rotor (AVIM).	5-29
Repair — Pitch Link Assembly.	5-157
Repair — Pitot Tube.	8-161
Repair — Pivot Sleeve (AVIM).	5-126
Rework of Pivot Sleeve Assembly	F 5-51
Repair — Pocket Assembly.	2-155
Repair — Position Lights.	9-297
Repair — Pylon Isolation Mount and Transmission Mount Support.	2-296
Pylon Isolation Mount (P/N 206-030-539-5 and -101)	F 2-59
Pylon Isolation Mount Repair	F 2-58
Repair — Pylon Supports. (AVIM).	2-287
Repair — Sawtooth Blades, Cutter deflector (upper and lower).	2-328
Repair — Seal Foam Assemblies.	2-313
Repair — Servoactuator Support.	7-46
Repair — Shunts and Bus Bars.	9-190
Repair — Sight Gage, Oil Level Assembly.	6-104
Repair — Skid Shoe Assembly — High Landing Gear (AVIM).	3-55.b
Repair — Skid Shoe Assembly — Standard Landing Gear.	3-21
Repair — Skid Tubes — High Landing Gear.	3-49
Repair — Skid Tubes — Standard Landing Gear.	3-15.b
Skid Tube Insertion Repair (Typical)	F 3-6
Skid Tube Patch Repair (Typical)	F 3-5
Tow Ring Doubler Plate	F 3-8

Subject	Paragraph Figure, Table Number
Tow Ring Repair	F 3-7
Repair — Solenoid Valve.	7-30
Repair — Standard Exhaust System.	4-59
Repair — Standard Landing Gear System (figure 3-4).	3-7
Repair — Starter-Generator. (AVIM)	9-43
Brush Run-in Diagram	F 9-6
Starter-Generator	F 9-5
Starter-Generator and Tachometer Generator Mounting Pads	F 9-4
Work and Inspection Gage	F 9-7
Repair — Static Stop — Main Rotor Hub.	5-65
Repair — Stiffeners.	2-386
Repair — Strut Assemblies.	2-344
Repair — Support Assembly (Swashplate).	5-150
Repair — Support, Taillight.	2-280
Repair — Swashplate and Support Assembly (AVIM).	5-118.f
Inspection and Repair Limits — Collar Set — Pylon (Swashplate)	F 5-49
Inspection and Repair Limits — Pylon (Idler) Link	F 5-47
Inspection and Repair Limits — Support Pylon (Swashplate)	F 5-48
Outer Cap — Damage Limits	F 5-50
Repair — Switch Box Assembly — Collective Control Stick.	9-129
Repair — Tail Rotor Blade Bearings. (AVIM)	5-245
Replacement — Tail Rotor Blade Bearing	F 5-81
Repair — Tail Rotor Driveshaft Cover.	2-256
Repair — Tail Rotor Driveshaft.	6-117
Steel driveshaft:	6-117.b
Repair — Tail Rotor Gearbox.	6-204
Repair — Tail Rotor Hub Trunnion.	5-219
Repair — Tail Rotor Hub.	5-234
Hub Assembly — Disassembly/Assembly (After compliance with MWO 55-1520-228-50-25)	F 5-74
Inspection and Repair Limits — Tail Rotor Hub Bearing Liner	F 5-61
Inspection and Repair Limits — Tail Rotor Pitch Horn	F 5-71
Needle Bearing Housing Damage Limits	F 5-76
Tail Rotor Hub and Blade Assembly — Disassembly/Assembly (After compliance with MWO 55-1520-228-50-25)	F 5-73
Tail Rotor Hub and Blade Assembly - Removal/Installation	F 5-72
Tail Rotor Hub Wear Limits	F 5-75
Trunnion Damage Limits	F 5-78
Yoke Damage Limits	F 5-77
Repair — Tail Rotor Installation Components.	5-185
Repair — Tail Rotor Pitch Horn.	5-225
Repair — Tail Skid.	2-274
Repair — Tailboom.	2-249
Repair of tail rotor gearbox mount. (AVIM)	2-249.c
Tailboom Assembly (MWO 55-1520-228-30-24 Accomplished)	F 2-48
Tailboom Assembly (MWO 55-1520-228-50-25 Accomplished)	F 2-49
Tailboom Damage Limits and Repair	F 2-47
Tailboom Removal/Installation	F 2-46
Repair — Taillight.	9-307
Repair — Terminal Boards.	9-195
Repair — Transmission Fairing Assembly C (figure 2-12).	2-42
Repair — Transmission Fairing Assembly.	2-41
Repair — Trunnion — Main Rotor.	5-41
Repair — Trunnion Main Rotor (AVIM).	5-47
Repair — Tube Assembly (Flexible).	2-235
Repair — Tube Assembly (Metal).	2-229
Repair — Upper Cutter Assembly.	2-351
Repair — Ventilating and Defogging Ducts.	13-36.a
Repair — Ventilating Blower.	13-105
Repair — Vertical Fin and Supports.	2-268
Repair — Vertical Speed Indicator.	8-191
Repair — Vibrator.	13-71
Repair — Windshields and Windows.	2-136
Repair — Yoke/Shield — Main Rotor Hub (AVIM).	5-53
Inspection and Repair Limits — Yoke — Main Rotor	F 5-23
Yoke Brinell Depth Inspection with Work Aid	F 5-22.1
Repair - Battery.	9-30
Repair - Fuel Cell Support.	2-197.2
Fuel Cell Support	F 2-44
Repair - Fuel Quantity Indicator.	8-239
Repair - High Landing Gear.	3-42
Repair - Servoactuator Support.	7-43
Repair - Servoactuators (Cyclic and Collective).	7-38
Repair - Voltage Regulator.	9-55
Repair Infrared Exhaust System.	4-60
Repair Inner Ring (AVIM).	5-138
Repair or Replacement — Air Mixing Valve (AVIM).	13-10
Repair or Replacement — Armament Electrical System.	9-382
Troubleshooting — Armament Electrical System A	T 9-18
Repair or Replacement — Armor Panels.	2-130
Repair or Replacement — Attitude Indicator.	8-209
Repair or Replacement — Attitude/Turn and Slip Indicator.	8-218
Repair or Replacement — Auxiliary Power Receptacle (J120).	9-374
Repair or Replacement — Bleed Air Heater System.	9-352
Repair or Replacement — Chip Detectors.	9-179
Repair or Replacement — Collective Sticks.	11-10
Repair or Replacement — Common Electrical Components.	9-365
Repair or Replacement — Control Tubes.	11-121

Subject	Paragraph Figure, Table Number
Repair or Replacement — Controllable Landing Light.	9-283
Repair or Replacement — Cyclic Button Switch (S58 and S59).	9-144
Repair or Replacement — Cyclic Control Linkage.	11-83
Repair or Replacement — Cyclic Stick Grip Assembly.	9-138
Cyclic Stick Grip Assembly Internal Wiring Schematic A	F 9-18
Disassembly — Cyclic Stick Grip Assembly (Typical)	F 9-17
Repair or Replacement — DC Ammeter.	8-274
Repair or Replacement — Defogging Blower Motors (B7 and B8).	9-344
Repair or Replacement — Door Assemblies.	2-10
Latch Assembly — Crew Door	F 2-4
Latch Assembly — Passenger Door	F 2-5
Repair — Stud Tearout and Door Hinge	F 2-6
Repair or Replacement — Engine Oil Pressure Indicator.	8-19
Repair or Replacement — Engine Oil Temperature Indicator.	8-104
Repair or Replacement — Engine Out Warning Switch.	8-92
Repair or Replacement — Fire Extinguisher.	17-7
Repair or Replacement — Fitting Assembly — Armament (Hard Points).	2-221
Repair or Replacement — Force Gradient Assembly.	11-66
Repair or Replacement — Gas Producer Tachometer Generator.	8-78
Repair or Replacement — Gas Producer Tachometer Indicator.	8-69
Repair or Replacement — Hydraulic Check Valve.	7-77
Repair or Replacement — Hydraulic Filters.	7-65
Repair or Replacement — Hydraulic Hoses, Lines, and Quick-Disconnects.	7-71
Repair or Replacement — Hydraulic Pump.	7-17
Repair or Replacement — Hydraulic Relief Valve.	7-84
Repair or Replacement — Hydraulic Reservoir.	7-58
Repair or Replacement — Idler Link Assembly Collar Set.	5-165
Repair or Replacement — Instruments.	8-6
Repair or Replacement — Inverter.	9-205
Repair or Replacement — IR/White (Dual) Landing/Searchlight.	9-275
Repair or Replacement — Jettison Mechanism.	2-32
Repair or Replacement — Low Level Switch (Crashworthy).	10-28
Auxiliary Fuel Cell	F 10-3
Auxiliary Fuel Cell Installation (Sheet 2)	F 10-4
Fuel Calibration Card	F 10-5
Work Aid for Fuel Pump Cartridge Removal	F 10-2
Repair or Replacement — Magnetic Brake.	11-73
Repair or Replacement — Mounting Plate Bearing.	9-101
Linear Actuator	F 9-15
Repair or Replacement — Passive Defense. A	2-60
Repair or Replacement — Pilot Collective Stick Elbow.	11-11.2
Repair or Replacement — Pitot Heater System.	9-360
Repair or Replacement — Pitot-Static Piping and Fittings.	8-153
Pitot-Static and Instrument Piping Installation A (After incorporation of MWO 55-1520-228-30/22)	F 8-1
Repair or Replacement — Power Turbine Tachometer Generator.	8-60
Repair or Replacement — Pressure Switch.	8-252
Repair or Replacement — Rotor Tachometer Generator.	8-51
Repair or Replacement — SENSOR, RPM.	8-86
Repair or Replacement — Shielded Ignition Lead Assembly.	13-83
Repair or Replacement — Soundproofing Blankets.	2-168
Repair or Replacement — Sump Valve (Crashworthy).	10-38
Repair or Replacement — Torquemeter Indicator.	8-28
Repair or Replacement — Transmission Oil Pressure Indicator.	8-289
Repair or Replacement — Transmission Oil Pressure Transmitter.	8-298
Repair or Replacement — Turbine Outlet Temperature (TOT) Indicator.	8-126
Troubleshooting — Turbine Outlet Temperature System (TOT)	T 8-6
Repair or Replacement — Turbine Outlet Temperature Indicator.	8-143
Repair or Replacement — Turn and Slip Indicator.	8-200
Repair or Replacement - Fuel Quantity Transmitters.	8-246
Repair or Replacement - Tachometer Indicator.	8-42
Repair or Replacement— Ram Air Duct. A	16-10
Repair or Replacement— Remote Sensor.	13-17
Repair or Replacement—Free Air Temperature Indicator (Thermometer).	8-260
Repair Tail Rotor Blades.	5-253
Repair.	3-35
REPAIR-DOOR FRAME/WINDSHIELD FRAME ASSEMBLY. (ROUND GLASS)	2-136.1
Repair/Replacement — Anti-Icing Lever.	12-15
Repair/Replacement — Bleed Air Installation.	4-38
Repair/Replacement — Connecting Link Assembly.	12-9
Repair/Replacement — Intersystem Oil Leakage.	4-98
Repair/Replacement — Oil Supply System Hoses, Fittings, and Tubing.	4-94
Repair/Replacement — Seals — Freewheeling Housing.	6-66

Subject	Paragraph Figure, Table Number
Repair/Replacement — Seals.	6-20
Repair/Replacement — Second Accumulator.	4-15
Repair/Replacement — Shaft Assembly — Freewheeling.	6-39
Repair/Replacement — Spindle (Transmission).	6-110
Repair/Replacement — Tail Rotor Pitch Change Mechanism.	5-212
Repair Limits — Tail Rotor — Pitch Change Mechanism Control Tube	F 5-68
Wear limits - Tail Rotor - Pitch Change Mechanism Pitch Key	F 5-69
Wear Limits - Tail Rotor - Pitch Change Mechanism Straight Pin	F 5-70
Repair/Replacement - Engine.	4-32
Repair—Windshield Deflector Assembly.	2-363
Replace and Install — 3-Micron External Oil Filter.	6-252.5
Replacement – Copilot Collective Stick Elbow.	11-11.4
Replacement — Input Seal, Tail Rotor Gearbox.	6-189.c
Work Aid	F 6-29
Replacement — Output Seal, Tail Rotor Gearbox.	6-188
Replacement — Overheat Switch.	13-24.5
Setup for Heat Sensor Test	F 13-4.1
Replacement — Tail Rotor Gearbox Input Seal.	6-211
Replacement — Tail Rotor Gearbox Output Seal.	6-207
Replacement of Aluminum Wool — Tail Rotor Gearbox Cap Assembly.	6-224
Replacement/Installation — External Scavenge Oil Filter Element.	4-98.10
REQUIREMENTS.	E-2
RESTRAINT EQUIPMENT.	2-96
REWORK — CHANNEL.	2-368.1
Rework — Engine Cowling (AVIM).	2-50
Rework — Freewheeling Assembly Vent Assembly. (AVIM)	6-31
REWORK — SAWTOOTH INSERT.	2-366.1
Rigging — Tail Rotor Control System (After MWO 55-1520-228-50-25).	11-101.n
ROD END BEARING — LINEAR ACTUATOR.	9-103
ROLL STAKED BEARINGS.	11-126
Rotor Blade Tie-Down.	1-40.3
Rotor Blades - Cleaning.	1-22
ROTOR SYSTEM.	E-19.d
ROTOR TACHOMETER GENERATOR.	8-44

S

Subject	Paragraph Figure, Table Number
SAWTOOTH BLADES, CUTTER DEFLECTORS (UPPER AND LOWER).	2-323
SEAL FILLER ASSEMBLY.	2-309
SEALS (MAIN DRIVESHAFT P/N 206-040-100-13).	6-16
SEAT BELTS.	2-98
SECOND ACCUMULATOR.	4-11
SECURITY.	C-2
SENSOR, RPM.	8-80
Serviceability Check.	6-6
Servicing — Battery.	1-13
Servicing — Engine Assembly.	4-25
Servicing — Fuel System.	1-5.c
Gravity Refueling with Closed Circuit Receiver	F 1-2
Refueling Receptacle	F 1-3
Servicing — Hydraulic System.	1-12
Servicing — Tires.	1-14
Servicing - Engine Oil System.	1-8
Servicing - Oil Lubricated Main Rotor Hub.	1-9
Servicing - Tail Rotor Gearbox.	1-11
Engine Oil Inlet Hose and Elbow	F 1-4
Servicing - Transmission Oil System.	1-10
SERVICING.	1-1
SERVOACTUATOR SUPPORT.	7-40
SERVOACTUATORS (CYCLIC AND COLLECTIVE).	7-33
SHAFT ASSEMBLY — FREEWHEELING.	6-35
SHIELDED IGNITION LEAD ASSEMBLY.	13-77
SHOULDER HARNESS.	2-103
SHUNTS AND BUS BARS.	9-187
SIGHT GAGE, OIL LEVEL ASSEMBLY.	6-100
Sight Glass Replacement — Tail Rotor Gearbox.	6-222
Sight Glass Replacement.	6-197
SKID SHOE ASSEMBLY — HIGH LANDING GEAR.	3-51
SKID SHOE ASSEMBLY — STANDARD LANDING GEAR.	3-17
SKID TUBES — HIGH LANDING GEAR.	3-44
SKID TUBES — STANDARD LANDING GEAR.	3-9
SLING LOADING.	1-43
Snow and Ice Removal.	1-19
SOLENOID VALVE.	7-20
SOUNDPROOFING BLANKETS.	2-163
SPECIAL INSPECTION.	1-50
Inspection Area Diagram	F 1-8
SPECIAL TOOLS AND EQUIPMENT	P-8
SPECIAL TOOLS AND TEST EQUIPMENT.	1-29
SPINDLE (TRANSMISSION).	6-106
STANDARD GROUPS.	B-4
STANDARD LANDING GEAR.	3-2
STANDARDS OF SERVICEABILITY.	1-49
STARTER RELAY.	9-215
STARTER SWITCH.	9-220
STARTER SYSTEM.	9-207
STARTER-GENERATOR.	9-38
STATIC STOP — MAIN ROTOR HUB.	5-61
STATIC VENT.	8-163
Station Diagram	F FO-1
STIFFENERS, LOWER CUTTER.	2-382
STORAGE	P-10
STORAGE OF AIRCRAFT UNDERGOING MAINTENANCE.	E-5.1
Stowage — Copilot Cyclic Stick.	11-42

Subject	Paragraph Figure, Table Number
STRAINER PUMP ASSEMBLY REMOVAL.	6-292
STRUT ASSEMBLIES (UPPER AND LOWER).	2-339
Stud Replacement — Tail Rotor Gearbox. (AVIM)	6-215.c
Stud Replacement Limits	T 6-5
Tail Rotor Gearbox Stud Replacement	F 6-37
SUMP VALVE — CRASHWORTHY.	10-34
SUPPORT — TAILLIGHT.	2-276
SUPPORT ASSEMBLY (SWASHPLATE).	5-146
SUPPORT EQUIPMENT.	1-31
SWASHPLATE AND SUPPORT ASSEMBLY.	5-110
SWITCH BOX ASSEMBLY — COLLECTIVE CONTROL STICK.	9-125
SYMBOLS.	B-5
Airframe Items	T B-1
System Bleeding — Engine Oil Pressure Indicator and Torque-Meter Indicator.	8-8

T

Subject	Paragraph Figure, Table Number
TACHOMETER INDICATING SYSTEM.	8-30
TAIL ROTOR BLADES (After compliance with MWO 55-1520-228-50-25.)	5-248
TAIL ROTOR BLADES.	5-239
TAIL ROTOR CONTROL SYSTEM.	11-93
TAIL ROTOR DRIVESHAFT COVER.	2-251
TAIL ROTOR DRIVESHAFT.	6-158
Tail Rotor Gearbox Stud Replacement. (AVIM)	6-190
Stud Replacement Limits	T 6-4
Tail Rotor Gearbox Repair	F 6-31
Work Aid	F 6-30
TAIL ROTOR GEARBOX.	6-181
TAIL ROTOR GROUP.	E-37
TAIL ROTOR HUB AND BLADE ASSEMBLY.	5-227
TAIL ROTOR HUB AND BLADE ASSEMBLY. (Prior to compliance with MWO 55-1520-228-50-25.)	5-180
TAIL ROTOR HUB AND CONTROLS.	5-190
TAIL ROTOR HUB TRUNNION.	5-215
TAIL ROTOR HUB.	5-192
TAIL ROTOR PEDAL ASSEMBLY.	11-104
TAIL ROTOR PITCH CHANGE MECHANISM.	5-204
TAIL ROTOR PITCH HORN.	5-221
TAIL ROTOR.	5-174
TAIL SKID.	2-270
TAILBOOM.	2-243
TAILLIGHT.	9-300
TERMINAL BOARDS.	9-192
Test — Coil and Body Assembly.	13-76
Test — Combustion Heater System.	13-41
Test — Hydraulic Relief Valve.	7-82
Test — Oil Selector (Bypass) Valve.	4-85
Test — Primary Directional Control Vulnerability Reduction System (Electrical).	9-121
Test — Solenoid Valve.	7-26
Test — Vibrator.	13-73
Test and Adjustment - Fuel Quantity Indicating System.	8-232
Adjustment (on helicopter)	8-232.a
Testing — Anticollision Lights.	9-313
Testing — Armament Electrical System (Armament Control Circuitry).	9-379
Testing — Attitude Indicator.	8-206
Testing — Attitude/Turn and Slip Indicator.	8-215
Testing — Auxiliary Power Receptacle (J120).	9-371
Testing — Bleed Air Heater System.	9-349.b
Testing — Caution and Warning Lights System.	9-149
Cyclic Stick Grip Assembly Internal Wiring Schematic **C**	F 9-19
DC Generator Caution Light.	9-149.n
Engine Chip Detector Caution Light.	9-149.j
Engine Oil Bypass Caution Light.	9-149.g
ENGINE OUT and ROTOR RPM Warning.	9-149.u
Engine Out Warning (Visual and Audio).	9-149.r
Fuel Boost Caution Light.	9-149.b
Fuel Filter Caution Light After Compliance with MWO 1-1520-228-50-48.	9-149.f
Hydraulic Pressure Caution Light.	9-149.o
Instrument Inverter Caution Light.	9-149.m
Procedure for Engine Oil in Tank.	9-149.i
Procedure for Less Than Twenty Minutes Fuel.	9-149.d
Procedure for More Than Twenty Minutes Fuel.	9-149.e
Procedure for No Engine Oil in Tank.	9-149.h
Tail Rotor Chip Detector Caution Light.	9-149.l
Transmission Chip Detector Caution Light.	9-149.k
Testing — Cyclic Stick Grip Assembly.	9-146
Testing — Defogging Blower Motors (B7 and B8).	9-341
Testing — Defogging Blower System.	9-336
Testing — Engine Anti-icing System.	12-3
Testing — Engine Oil Pressure Indicator.	8-16
Testing — Engine Oil Temperature Indicator.	8-102
Testing — External Power System.	9-7
Testing — Fault Annunciator Panel.	9-323
Testing — Force Trim System.	9-117.c
Testing — Fuel Pump System.	9-77
Testing — Gas Producer Tachometer Generator **A**.	8-75.a
Testing — Gas Producer Tachometer Generator **C**.	8-76.a
Testing — Gas Producer Tachometer Indicator (N1).	8-66
Testing — Governor Control Linear Actuator.	9-98.b
Linear Actuator External Wiring	F 9-13
Linear Actuator Filter Terminal Identification and Schematic	F 9-14
Linear Actuator Wiring Schematic	F 9-12
Linear Actuator Work Aid	F 9-11
Testing — Governor Control System.	9-84
Troubleshooting — Fuel Pump System	T 9-3

Subject	Paragraph Figure, Table Number
Testing — Hydraulic Control System.	9-108.a
Testing — Ignition System.	9-228
Testing — Instruments.	8-9
Testing — Interior Lights System.	9-241
Testing — Inverter.	9-202
Testing — Landing Lights.	9-257
Testing — Low Level Switch (Crashworthy).	10-26
Testing — Night Vision Goggles (NVG) System.	9-387
Testing — NVG Position Lights.	9-292
Testing — Pitot Heater System.	9-357
Testing — Position Lights.	9-291
Testing — Rotor Tachometer Generator C	8-49
Testing — SENSORS, RPM.	8-84
Testing — Starter System.	9-211
Testing — Taillight.	9-304
Testing — Torquemeter Indicator.	8-25
Testing — Transmission Oil Pressure Indicating System.	8-280
Testing — Transmission Oil Pressure Indicator.	8-286
Testing — Transmission Oil Pressure Transmitter.	8-295
Testing — Turbine Outlet Temperature (TOT) Indicator.	8-123
Testing — Turbine Outlet Temperature Indicating System.	8-134
Testing — Turbine Outlet Temperature Indicator.	8-140
Testing — Turbine Outlet Temperature System.	8-117
Sequential testing.	8-117.a
Testing — Turn and Slip Indicator.	8-198
Testing - Battery and Generator System.	9-22
Testing - Caution and Warning Lights System.	9-152
Testing - Dual Tachometer Indicating System.	8-33
Testing - Fuel Quantity Transmitters.	8-243
Testing - Rotor Tachometer Generator A	8-48.d
Testing - Tachometer Indicator.	8-39
Testing Hydraulic System with Hydraulic Test Stand (S3).	7-7
Testing Hydraulic System With Transmission-Driven Pump.	7-8
Testing Power Turbine Tachometer Generator A	8-57
Testing—Free Air Temperature Indicator (Thermometer).	8-258
THERMOCOUPLE RESISTOR.	8-128
Tie-Down and Mooring.	1-40
TOOLS AND TEST EQUIPMENT (Section III).	B-7
TORQUE PROCEDURES AND REQUIREMENTS.	1-25
Recommended Standard Nut Torques	T 1-1
Torque Requirement — Tailboom.	2-246
TORQUEMETER INDICATOR.	8-21
Towing.	1-37
Ground Handling	F 1-6
Lubrication Chart	F 1-5
TRANSMISSION FAIRING ASSEMBLY.	2-36
TRANSMISSION OIL LEVEL INDICATOR.	6-226.1
TRANSMISSION OIL PRESSURE INDICATING SYSTEM C	8-278
TRANSMISSION OIL PRESSURE INDICATOR C	8-282
TRANSMISSION OIL PRESSURE SWITCH.	9-169
TRANSMISSION OIL PRESSURE TRANSMITTER C	8-291
TRANSMISSION OIL PRESSURE TRANSMITTER.	6-242
TRANSMISSION OIL PUMP.	6-227
TRANSMISSION OIL SYSTEM.	6-225
TRANSMISSION OIL TEMPERATURE SWITCH.	6-243
TRANSMISSION SUPPORT STRAPS.	2-299
Treatment of Aluminum and Magnesium Alloy Corrosion.	1-23
Troubleshooting — Airspeed Indicator.	8-171
Airspeed Indicator Tolerance	T 8-9
Instrument Panel (Typical) A	F 8-3
Troubleshooting — Airspeed Indicator	T 8-8
Troubleshooting — Altimeters.	8-180
Altimeter Scale Error	T 8-11
Troubleshooting — Altimeter	T 8-10
Troubleshooting — anticollision Lights.	9-314
Troubleshooting — Armament Electrical System. A	9-380
Troubleshooting — Attitude Indicator.	8-207
Troubleshooting — Attitude Indicator	T 8-15
Troubleshooting — Attitude/Turn and Slip Indicator.	8-216
Troubleshooting — Attitude/Turn and Slip Indicator C	T 8-16
Troubleshooting — Auxiliary Power Receptacle (J120).	9-372
Troubleshooting — Battery Relay.	9-37
Troubleshooting — Bleed Air Heater System.	9-350
Troubleshooting — Cockpit Lights.	9-249
Troubleshooting — Collective Pitch Control System.	11-3
Collective Controls	F 11-1
Troubleshooting — Collective Pitch Control System	T 11-1
Troubleshooting — Combustion Heater System.	13-42
Troubleshooting – Combustion Air System	T 13-3
Troubleshooting – Fuel System	T 13-4
Troubleshooting – Ignition System	T 13-5
Troubleshooting – Ventilation Air System	T 13-2
Troubleshooting — Controllable Landing Light System.	9-279
Troubleshooting — Controllable Landing Light C	T 9-16
Troubleshooting — Cyclic Control System.	11-39
Troubleshooting Cyclic Control System	T 11-2
Troubleshooting — DC Ammeter.	8-272
Troubleshooting — DC Ammeter	T 8-18

Subject	Paragraph Figure, Table Number
Troubleshooting — Defogging Blower Motors (B7 and B8)	9-342
Troubleshooting — Defogging Blower System	9-337
Troubleshooting — Defogging Blower System	T 9-17
Troubleshooting — Drive Train	6-3
Troubleshooting — Drive Train	T 6-1
Troubleshooting — Dual Tachometer Indicating System	8-34
Troubleshooting — Dual Tachometer Indicating System	T 8-2
Troubleshooting — Engine Anti-Icing System	12-4
Troubleshooting — Engine Assembly	4-27
Troubleshooting — Engine Oil Pressure Indicator	8-17
Troubleshooting — Engine Oil Temperature System	8-96
Troubleshooting — Engine Oil Temperature System	T 8-4
Troubleshooting — Engine Oil Temperature Transmitter Bulb	8-114
Troubleshooting — External Power Relay	9-19
Troubleshooting — External Power System	9-8
Troubleshooting — Fault Annunciator Panel	9-324
Troubleshooting — Force Trim System	9-118
Troubleshooting — Force Trim System	T 9-6
Troubleshooting — Fuel Pump System	9-78
Troubleshooting — Fuel System (Crashworthy)	10-16
Troubleshooting — Fuel System	T 10-1
Troubleshooting — Gas Producer Tachometer Indicator	8-67
Troubleshooting — Governor Control System	9-85
Troubleshooting — Heating and Ventilating System	13-4
Bleed Air Valve Assembly — Bleed Air Heater	F 13-3
Combustion Heater System (Sheet 1 of 2)	F 13-4
Combustion Heater System (Sheet 2 of 2)	F 13-4
Heating and Ventilating System A	F 13-1
Troubleshooting – Heating and Ventilating System	T 13-1
Troubleshooting — Hydraulic Control System	9-109
Troubleshooting — Hydraulic Control System	T 9-5
Troubleshooting — Hydraulic System	7-6
Troubleshooting — Hydraulic System	T 7-1
Troubleshooting — Ignition System	9-229
Troubleshooting — Ignition System	T 9-10
Troubleshooting — Interior Lights System	9-242
Troubleshooting — Interior Lights A	T 9-11
Troubleshooting — Interior Lights C	T 9-12
Troubleshooting — Inverter	9-203
Troubleshooting — IR/White (Dual) Landing/Searchlight	9-271
Troubleshooting — Landing Lights	9-258
Troubleshooting — Exterior Lights	T 9-13
Troubleshooting — Exterior Lights After compliance with MWO 55-1520-228-50-32	T 9-14
Troubleshooting — Magnetic Compass (Standby)	8-227
Troubleshooting — Main Rotor Assembly	5-5
Main Rotor Assembly (Typical)	F 5-1
Main Rotor Hub Surface Repair Limits	F 5-2
Troubleshooting — Main Rotor Assembly	T 5-1
Troubleshooting — Night Vision (NVG) Goggles System	9-388
Troubleshooting — Night Vision Goggles (NVG) System	T 9-19
Troubleshooting — Nonessential Bus Relay	9-74
Troubleshooting — NVG Position Lights	9-294
Troubleshooting — Pitot Heater System	9-358
Troubleshooting — Pitot-Static System	8-147
Troubleshooting — Position Lights	9-293
Troubleshooting — Power Controls	4-107
Troubleshooting — Primary Directional Control Vulnerability Reduction System (Electrical)	9-123
Troubleshooting — Primary Directional Control Vulnerability Reduction System (Electrical) C	T 9-7
Troubleshooting — Starter System	9-212
Troubleshooting — Starter	T 9-9
Troubleshooting — Tail Rotor Control System	11-98
Troubleshooting — Tail Rotor	5-178
Tail Rotor Removal/Installation	F 5-54
Troubleshooting — Taillight	9-305
Troubleshooting — Torquemeter Indicator	8-26
Troubleshooting — Transmission Oil Pressure Indicating System	8-281
Troubleshooting — Transmission Oil Pressure Indicating System C	T 8-19
Troubleshooting — Transmission Oil Pressure Indicator	8-287
Troubleshooting — Transmission Oil Pressure Transmitter	8-296
Troubleshooting — Turbine Outlet Temperature (TOT) Indicator	8-124
Troubleshooting — Turbine Outlet Temperature Indicating System	8-135
Troubleshooting — Turbine Outlet Temperature Indicator	8-141
Troubleshooting — Turbine Outlet Temperature System	8-118
Troubleshooting — Turn and Slip Indicator	8-197
Troubleshooting — Turn and Slip Indicator A	T 8-14
Troubleshooting — Vertical Speed Indicator (VSI)	T 8-12
Vertical Speed Indicator Tolerance	T 8-13
Troubleshooting — Vertical Speed Indicator	8-189
Troubleshooting - Battery and Generator	9-23
Troubleshooting — Battery and Generator	T 9-2
Troubleshooting - Caution and Warning Lights System	9-153
Troubleshooting - Fuel Quantity Indicator	8-237
Fuel Density/Dielectric Charts	F 8-4

Subject	Paragraph Figure, Table Number
Troubleshooting - Fuel Quantity Indicator	T 8-17
Troubleshooting - Fuel Quantity Transmitters.	8-244
Troubleshooting - Generator Fail Relay.	9-68
Troubleshooting - Line Control Relay.	9-62
Troubleshooting - Tachometer Indicator.	8-40
TRUNNION — MAIN ROTOR.	5-37
TUBE ASSEMBLY (Flexible).	2-231
TUBE ASSEMBLY (Metal).	2-225
TURBINE OUTLET TEMPERATURE (TOT) INDICATOR **A**	8-119
TURBINE OUTLET TEMPERATURE INDICATING SYSTEM **C**.	8-132
TURBINE OUTLET TEMPERATURE INDICATOR **C**.	8-136
TURBINE OUTLET TEMPERATURE SYSTEM **A**	8-115
TURN AND SLIP INDICATOR **A**	8-193
U	
UPPER CUTTER ASSEMBLY.	2-347
USE OF THE MAINTENANCE ALLOCATION CHART.	B-2
USE OF WORDS SHALL, SHOULD, AND MAY	P-14
V	
VENTILATING AND DEFOGGING BLOWER.	13-25
VENTILATING AND DEFOGGING DUCTS.	13-32
VERTICAL FIN AND SUPPORTS.	2-264
VERTICAL SPEED INDICATOR	8-184
VIBRATOR	13-67
VOLTAGE REGULATOR.	9-50
W	
WARNINGS, CAUTIONS, AND NOTES	P-6
WEIGHT AND BALANCE.	1-44
WINDSHIELD DEFLECTOR ASSEMBLY.	2-359
WINDSHIELDS AND WINDOWS.	2-132
WIRE IDENTIFICATION.	F-2
WIRE STRIKE PROTECTION SYSTEM (WSPS).	2-321
WIRING DATA.	F-1
WORK TIMES.	B-6
Y	
YOKE/SHIELD —MAIN ROTOR HUB.	5-49

By Order of the Secretary of the Army:

CARL E. VUONO
General, United States Army
Chief of Staff

Official:

WILLIAM J. MEEHAN II
Brigadier General, United States Army
The Adjutant General

DISTRIBUTION:
To be distributed in accordance with DA Form 12-31 AVUM and AVIM Maintenance Requirements for OH-58A and OH-58C Helicopters, Observation.

These are the instructions for sending an electronic 2028

The following format must be used if submitting an electronic 2028. The subject line must be exactly the same and all fields must be included; however only the following fields are mandatory: 1, 3, 4, 5, 6, 7, 8, 9, 10, 13, 15, 16, 17, and 27.

From: “Whomever” <whomever@wherever.army.mil>
To: 2028@redstone.army.mil

Subject: DA Form 2028

1. ***From:*** Joe Smith
2. *Unit:* home
3. ***Address:*** 4300 Park
4. ***City:*** Hometown
5. ***St:*** MO
6. ***Zip:*** 77777
7. ***Date Sent:*** 19−OCT−93
8. ***Pub no:*** 55−2840−229−23
9. ***Pub Title:*** TM
10. ***Publication Date:*** 04−JUL−85
11. *Change Number:* 7
12. *Submitter Rank:* MSG
13. ***Submitter FName:*** Joe
14. *Submitter MName:* T
15. ***Submitter LName:*** Smith
16. ***Submitter Phone:*** 123−123−1234
17. ***Problem:*** **1**
18. *Page:* 2
19. *Paragraph:* 3
20. *Line:* 4
21. *NSN:* 5
22. *Reference:* 6
23. *Figure:* 7
24. *Table:* 8
25. *Item:* 9
26. *Total:* 123
27. ***Text:***

This is the text for the problem below line 27.

RECOMMENDED CHANGES TO PUBLICATIONS AND BLANK FORMS

For use of this form, see AR 25--30; the proponent agency is ODISC4.

Use Part II (*reverse*) for Repair Parts and Special Tool Lists (RPSTL) and Supply Catalogs/ Supply Manuals (SC/SM)

DATE
8/30/02

TO: (*Forward to proponent of publication or form)(Include ZIP Code*)
Commander, U.S. Army Aviation and Missile Command
ATTN: AMSAM--MMC--MA--NP
Redstone Arsenal, AL 35898

FROM: (*Activity and location)(Include ZIP Code*)
MSG, Jane Q. Doe
1234 Any Street
Nowhere Town, AL 34565

PART 1 - ALL PUBLICATIONS (EXCEPT RPSTL AND SC/SM) AND BLANK FORMS

PUBLICATION/FORM NUMBER	DATE	TITLE
TM 9-1005-433-24	16 Sep 2002	Organizational, Direct Support, And General Support Maintenance Manual for Machine Gun, .50 Caliber M3P and M3P Machine Gun Electrical Test Set Used On Avenger Air Defense Weapon System

ITEM NO.	PAGE NO.	PARA-GRAPH	LINE NO. *	FIGURE NO.	TABLE NO.	RECOMMENDED CHANGES AND REASON
1	WP0005 PG 3		2			Test or Corrective Action column should identify a different WP number.

* *Reference to line numbers within the paragraph or subparagraph.*

TYPED NAME, GRADE OR TITLE	TELEPHONE EXCHANGE/ AUTOVON, PLUS EXTENSION	SIGNATURE
MSG, Jane Q. Doe, SFC	788-1234	

EXAMPLE

TO: (Forward direct to addressee listed in publication)	FROM: (Activity and location) (Include ZIP Code)	DATE
Commander, U.S. Army Aviation and Missile Command ATTN: AMSAM-MMC-MA-NP Redstone Arsenal, AL 35898	MSG, Jane Q. Doe 1234 Any Street Nowhere Town, AL 34565	8/30/02

PART II - REPAIR PARTS AND SPECIAL TOOL LISTS AND SUPPLY CATALOGS/SUPPLY MANUALS

PUBLICATION NUMBER	DATE	TITLE

PAGE NO.	COLM NO.	LINE NO.	NATIONAL STOCK NUMBER	REFERENCE NO.	FIGURE NO.	ITEM NO.	TOTAL NO. OF MAJOR ITEMS SUPPORTED	RECOMMENDED ACTION

PART III - REMARKS (*Any general remarks or recommendations or suggestions for improvement of publications and blank forms. Additional blank sheets may be used if more space is needed.*)

EXAMPLE

TYPED NAME, GRADE OR TITLE	TELEPHONE EXCHANGE/AUTOVON, PLUS EXTENSION	SIGNATURE
MSG, Jane Q. Doe, SFC	788-1234	

RECOMMENDED CHANGES TO PUBLICATIONS AND BLANK FORMS **For use of this form, see AR 25--30; the proponent agency is ODISC4.**	Use PartII(*reverse*) for Repair Parts and Special Tool Lists (RPSTL) and Supply Catalogs/ Supply Manuals (SC/SM)	DATE
TO*: (Forward to proponent of publication or form)(Include ZIP Code)* Commander, U.S. Army Aviation and Missile Command ATTN: AMSAM-MMC-MA-NP Redstone Arsenal, AL 35898	FROM*: (Activity and location)(Include ZIP Code)*	

PART 1 --ALL PUBLICATIONS (EXCEPT RPSTL AND SC/SM) AND BLANK FORMS

PUBLICATION/FORM NUMBER	DATE	TITLE

ITEM NO.	PAGE NO.	PARA-GRAPH	LINE NO. *	FIGURE NO.	TABLE NO.	RECOMMENDED CHANGES AND REASON

* *Reference to line numbers within the paragraph or subparagraph.*

TYPED NAME, GRADE OR TITLE	TELEPHONE EXCHANGE/ AUTOVON, PLUS EXTENSION	SIGNATURE

TO: *(Forward direct to addressee listed in publication)* Commander, U.S. Army Aviation and Missile Command ATTN: AMSAM-MMC-MA-NP Redstone Arsenal, AL 35898	**FROM:** *(Activity and location) (Include ZIP Code)*	**DATE**

PART II --REPAIR PARTS AND SPECIAL TOOL LISTS AND SUPPLY CATALOGS/SUPPLY MANUALS

PUBLICATION NUMBER	DATE	TITLE

PAGE NO.	COLM NO.	LINE NO.	NATIONAL STOCK NUMBER	REFERENCE NO.	FIGURE NO.	ITEM NO.	TOTAL NO. OF MAJOR ITEMS SUPPORTED	RECOMMENDED ACTION

PART III --REMARKS *(Any general remarks or recommendations, or suggestions for improvement of publications and blank forms. Additional blank sheets may be used if more space is needed.)*

TYPED NAME, GRADE OR TITLE	TELEPHONE EXCHANGE/AUTOVON, PLUS EXTENSION	SIGNATURE

USAPA V3.01

The Metric System and Equivalents

Linear Measure

1 centimeter = 10 millimeters = .39 inch
1 decimeter = 10 centimeters = 3.94 inches
1 meter = 10 decimeters = 39.37 inches
1 dekameter = 10 meters = 32.8 feet
1 hectometer = 10 dekameters = 328.08 feet
1 kilometer = 10 hectometers = 3,280.8 feet

Liquid Measure

1 centiliter = 10 milliters = .34 fl. ounce
1 deciliter = 10 centiliters = 3.38 fl. Ounces
1 liter = 10 deciliters = 33.81 fl. ounces
1 dekaliter = 10 liters = 2.64 gallons
1 hectoliter = 10 dekaliters = 26.42 gallons
1 kiloliter = 10 hectoliters = 264.18 gallons

Weights

1 centigram = 10 milligrams = .15 grain
1 decigram = 10 centigrams = 1.54 grains
1 gram = 10 decigram = .035 ounce
1 decagram = 10 grams = .35 ounce
1 hectogram = 10 decagrams = 3.52 ounces
1 kilogram = 10 hectograms = 2.2 pounds
1 quintal = 100 kilograms = 220.46 pounds
1 metric ton = 10 quintals = 1.1 short tons

Square Measure

1 sq. centimeter = 100 sq. millimeters = .155 sq. inch
1 sq. decimeter = 100 sq. centimeters = 15.5 sq. inches
1 sq. meter (centare) = 100 sq. decimeters = 10.76 sq. feet
1 sq. dekameter (are) = 100 sq. meters = 1,076.4 sq. feet
1 sq. hectometer (hectare) = 100 sq. dekameters = 2.47 acres
1 sq. kilometer = 100 sq. hectometers = .386 sq. mile

Cubic Measure

1 cu. centimeter = 1000 cu. millimeters = .06 cu. Inch
1 cu. decimeter = 1000 cu. centimeters = 61.02 cu. Inches
1 cu. meter = 1000 cu. decimeters = 35.31 cu. feet

Approximate Conversion Factors

To change	*To*	*Multiply by*	*To change*	*To*	*Multiply by*
inches	centimeters	2.540	ounce-inches	Newton-meters	.007062
feet	meters	.305	centimeters	inches	.394
yards	meters	.914	meters	feet	3.280
miles	kilometers	1.609	meters	yards	1.094
square inches	square centimeters	6.451	kilometers	miles	.621
square feet	square meters	.093	square centimeters	square inches	.155
square yards	square meters	.836	square meters	square feet	10.764
square miles	square kilometers	2.590	square meters	square yards	1.196
acres	square hectometers	.405	square kilometers	square miles	.386
cubic feet	cubic meters	.028	square hectometers	acres	2.471
cubic yards	cubic meters	.765	cubic meters	cubic feet	35.315
fluid ounces	milliliters	29,573	cubic meters	cubic yards	1.308
pints	liters	.473	milliliters	fluid ounces	.034
quarts	liters	.946	liters	pints	2.113
gallons	liters	3.785	liters	quarts	1.057
ounces	grams	28.349	liters	gallons	.264
pounds	kilograms	.454	grams	ounces	.035
short tons	metric tons	.907	kilograms	pounds	2.205
pound-feet	Newton-meters	1.356	metric tons	short tons	1.102
pound-inches	Newton-meters	.11296			

Temperature (Exact)

°F	Fahrenheit temperature	5/9 (after subtracting 32)	Celsius temperature	°C

PIN: 035016-000