# ARMY TM 9-2320-260-10
# AIR FORCE TO 36A12-1C-481

## TECHNICAL MANUAL

## OPERATOR'S MANUAL
### TRUCK, 5-TON, 6X6, M809 SERIES (DIESEL)

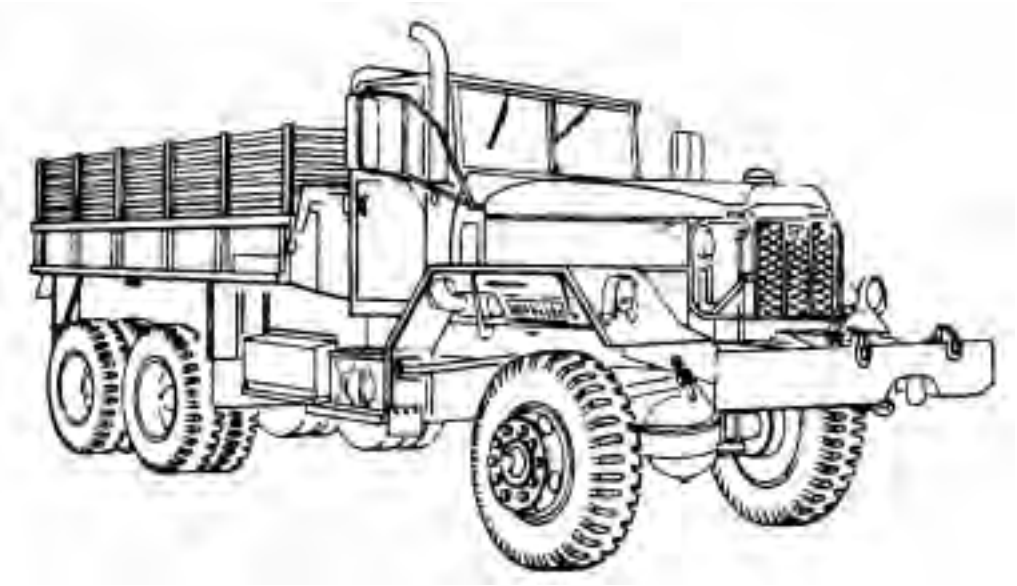

**TRUCK, CARGO: M813, M813A1, M814;**
**TRUCK, BOLSTER, LOGGING: M815;**
**TRUCK, WRECKER, MEDIUM: M816;**
**TRUCK, DUMP: M817;**
**TRUCK, TRACTOR: M818;**
**TRUCK, TRACTOR, WRECKER: M819;**
**TRUCK, VAN, EXPANSIBLE: M820, M820A1, M820A2;**
**TRUCK, STAKE, BRIDGE TRANSPORTING: M821**


**HEADQUARTERS, DEPARTMENT OF THE ARMY**

**This copy is a reprint which includes current pages from Changes 1 through 4.**

**14 JUNE 1985**

## WARNING

### EXHAUST CASES CAN KILL!

Brain damage or death can result from heavy exposure. Precautions must be followed to insure crew safety when the personnel heater or engine of any vehicle is operated for any purpose.

1. Do not operate your vehicle engine in enclosed areas.
2. Do not idle vehicle engine with vehicle windows closed.
3. Be alert at all times for exhaust odors.
4. Be alert for exhaust poisoning symptoms. They are:
   - headache
   - dizziness
   - sleepiness
   - loss of muscular control
5. If you see another person with exhaust poisoning symptoms:
   - remove person from area.
   - expose to open air.
   - keep person warm.
   - do not permit physical exercise.
   - administer artificial respiration, if necessary,
   - notify a medic.

   * For artificial respiration, refer to FM 21-11.
6. BE AWARE, the field protective mask for nuclear-biological-chemical (NBC) protection will not protect you from exhaust poisoning.

   THE BEST DEFENSE AGAINST EXHAUST POISONING IS ADEQUATE VENTILATION.

## WARNING

### HIGH INTENSITY NOISE

Hearing protection is required for the driver and co-driver. Hearing protection is also required for all personnel working in and around this vehicle while the engine is running (reference AR 40-5 and TB MED 501).

TA 094181

# WARNING SUMMARY

- After Nuclear, Biological, or Chemical (NBC) exposure of this vehicle, all air filters shall be handled with extreme caution. Unprotected personnel may experience injury or death if residual toxic agents or radioactive material are present. Servicing personnel will wear protective overgarments, mask, hood, and chemical protective gloves and boots. All contaminated air filters will be placed into double lined plastic bags and moved immediately to a temporary segregation area away from the work site. If contaminated by radioactive dust, the Company NBC team will measure the radiation before removal. The NBC team will determine the extent of safety procedures required. The temporary segregation area will be marked with the appropriate NBC signs. Final disposal of contaminated air filters will be in accordance with local SOP:
- Do not touch hot exhaust pipes with bare hands.
- Do not perform fuel system checks and inspection while smoking, or while near flames or sparks.
- Smoking, open flames, and sparks can cause battery gases to explode.
- Stay clear of dump body and cab protector at all times during loading and unloading operations.
- Never perform PMCS checks under raised dump body unless safety braces are properly positioned.
- Do not let vehicle coast downhill with clutch pedal depressed. Vehicle can go out of control.
- On dropside trucks, make certain forward end of dropsides are engaged before lowering tailgate.
- Dump body control lever in cab must be locked in "N" (neutral) position when dump truck is used as personnel carrier.
- Always chock vehicle wheels if operating site is on a grade, no matter how slight.
- After fording operations, do not rely on service brakes until they dry out.
- Pump brakes gradually when stopping vehicle on wet or slippery roads to avoid losing control of vehicle.
- Extreme care should be taken when removing surge tank filler cap if temperature gage reads above 175° F (79° C). Add coolant to cooling system only when engine is running. Add coolant slowly.
- **This vehicle has been designed to operate safely and effciently within the limits specified in this TM. Operation beyond these limits is prohibited LAW AR 70-1 without written approval from the Commander, U.S. Army Tank-Automotive Command, ATTN: AMSTA-CM-S, Warren, MI 48397-5000.**

## LIST OF EFFECTIVE PAGES

NOTE: The portion of the text affected by the changes is indicated by a vertical line in the outer margins of the page.

Dates of issue for original and changed pages are:

Original . . . . . 0 . . . . . 14 June 1985
Change . . . . . 1 . . . . 01 September 1988
Change . . . . . 2 . . . . . 28 November 1989
Change . . . . . 3 . . . . . 07 June 1993
Change . . . . . 4 . . . . . 31 August 2003

TOTAL NUMBER OF PAGES IN THIS PUBLICATION IS 396.
CONSISTING OF THE FOLLOWING:

| Page No. | *Change No. |
|---|---|
| Warning a | 0 |
| Warning b | 2 |
| A | 4 |
| B blank | 4 |
| i - ii | 4 |
| 1-1 - 1-7 | 0 |
| 1-8 | 4 |
| 1-9 | 1 |
| 1-10 | 0 |
| 1-11 | 2 |
| 1-12 - 1-14 | 0 |
| 1-15 - 1-18 | 4 |
| 1-19 - 1-22 | 0 |
| 1-23 - 1-24 | 4 |
| 1-25 | 0 |
| 1-26 - 1-27 | 4 |
| 1-28 - 1-31 | 0 |
| 1-32 blank | 0 |
| 2-1 - 2-3 | 0 |
| 2-4 | 4 |
| 2-5 - 2-6 | 1 |
| 2-7 - 2-13 | 0 |
| 2-14 | 1 |
| 2-15 - 2-16 | 0 |
| 2-17 | 1 |
| 2-18 - 2-27 | 0 |
| 2-28 | 1 |
| 2-29 - 2-35 | 0 |
| 2-36 | 1 |
| 2-37 | 0 |
| 2-38 - 2-70 | 4 |
| 2-70.1 - 2-70.30 added | 4 |
| 2-71 | 4 |
| 2-72 | 2 |
| 2-73 | 0 |
| 2-74 - 2-75 | 1 |
| 2-76 | 0 |
| 2-77 | 1 |
| 2-78 | 0 |
| 2-79 | 4 |
| 2-80 - 2-84 | 0 |
| 2-84.1 - 2-84.2 added | 1 |
| 2-85 blank | 1 |
| 2-86 | 1 |
| 2-87 - 2-88 | 0 |
| 2-89 - 2-90 | 1 |
| 2-91 - 2-92 | 4 |
| 2-93 | 1 |
| 2-94 | 0 |
| 2-95 | 1 |
| 2-96 - 2-98 | 0 |
| 2-99 - 2-101 | 4 |
| 2-102 - 2-104 | 0 |
| 2-105 | 1 |
| 2-106 - 2-117 | 0 |
| 2-118 | 1 |
| 2-119 - 2-120 | 0 |
| 2-121 - 2-122 | 1 |
| 2-123 | 4 |
| 2-124 - 2-125 | 1 |
| 2-126 | 4 |
| 2-127 - 2-142 | 0 |
| 2-143 | 1 |
| 2-144 - 2-148 | 0 |
| 2-149 | 1 |
| 2-150 - 2-151 | 4 |
| 2-152 | 1 |
| 2-153 - 2-155 | 0 |
| 2-156 | 1 |
| 2-157 - 2-159 | 0 |
| 2-160 | 1 |
| 2-161 | 0 |
| 2-162 | 1 |
| 2-163 | 0 |
| 2-164 | 1 |
| 2-165 - 2-169 | 0 |
| 2-170 | 1 |
| 2-171 - 2-212 | 0 |
| 2-213 | 1 |
| 2-214 - 2-234 | 0 |
| 2-235 - 2-236 | 1 |
| 3-1 - 3-19 | 0 |
| 3-20 | 4 |
| 3-21 - 3-28 | 0 |
| A-1 | 4 |
| A-2 | 1 |
| B-1 | 0 |
| B-2 | 1 |
| B-3 | 0 |
| B-4 | 4 |
| B-5 | 0 |
| B-6 - B-20 | 4 |
| B-21 - B-22 | 1 |
| B-23 - B-26 | 4 |
| B-26.1 added | 4 |
| B-26.2 blank | 4 |
| B-27 - B-28 | 4 |
| C-1 | 1 |
| C-2 - C-4 | 4 |
| D-1 - D-2 | 0 |
| D-3 - D-6 | 4 |
| E-1 | 1 |
| E-2 | 4 |
| E-3 | 0 |
| E-4 | 4 |
| Index-1 - Index-20 | 4 |

*Zero in this column indicates original page.

TECHNICAL MANUAL
NO. 9-2320-260-10
TECHNICAL ORDER
NO. 36A12-1C-481

CHANGE
NO. 4

HEADQUARTERS,
DEPARTMENT OF THE ARMY,
WASHINGTON, D.C., 31 *August 2003*

# OPERATOR'S MANUAL
# FOR

## TRUCK, 5-TON, 6X6, M809 SERIES TRUCKS (DIESEL)
## TRUCK, CARGO: M813, M813A1, M814;
## TRUCK, BOLSTER LOGGING: M815;
## TRUCK, WRECKER, MEDIUM: M816;
## TRUCK, DUMP: M817;
## TRUCK, TRACTOR: M818;
## TRUCK, TRACTOR, WRECKER: M819;
## TRUCK, VAN EXPANSIBLE: M820, M820A1, M820A2;
## TRUCK, STAKE, BRIDGE TRANSPORTING: M821

TM 9-2320-260-10 is changed as follows:

1. Remove old pages and insert new pages as indicated below.
2. New or changed material is indicated by a vertical bar in the margin of the page.

| Remove page | Insert page |
|---|---|
| None | A/(B blank) (After warning b) |
| i and ii | i and ii |
| 1-7 and 1-8 | 1-7 and 1-8 |
| 1-15 through 1-18 | 1-15 through 1-18 |
| 1-23 through 1-28 | 1-23 through 1-28 |
| 2-3 and 2-4 | 2-3 and 2-4 |
| 2-37 through 2-72 | 2-37 through 2-70.30 and 2-71 and 2-72 |
| 2-79 and 2-80 | 2-79 and 2-80 |
| 2-91 and 2-92 | 2-91 and 2-92 |
| 2-99 through 2-102 | 2-99 through 2-102 |
| 2-123 through 1-126 | 2-123 through 2-126 |
| 2-149 through 2-152 | 2-149 through 2-152 |
| 3-19 and 3-20 | 3-19 and 3-20 |
| A-1 and A-2 | A-1 and A-2 |
| B-3 through B-20 | B-3 through B-20 |
| B-23 through B-28 | B-23 through B-26.1/(B-26.2 blank) and B-27 and B-28 |
| C-1 through C-4 | C-1 through C-4 |
| D-3 through D-6 | D-3 through D-6 |
| E-1 through E-4 | E-1 through E-4 |
| Index 1 through Index 19/(Index 20 blank) | Index 1 through Index 20 |
| DA Form 2028-2 | DA Form 2028 |

3. File this change sheet in front of the publication for reference purposes.

Approved for public release; distribution is unlimited.

By Order of the Secretary of the Army:

PETER J. SCHOOMAKER
*General, United States Army*
*Chief of Staff*

Official:

JOEL B. HUDSON
*Administrative Assistant to the*
*Secretary of the Army*
0314301

By Order of the Secretary of the Air Force:

RONALD R. FOGLEMAN
*General, United States Air Force*
*Chief of Staff*

Official:

HENRY VICCELLIO, JR.
*General, United States Air Force*
*Commander, Air Force Materiel Command*

Distribution:

To be distributed in accordance with the initial distribution number (IDN) 380241, requirements for TM 9-2320-260-10.

**TECHNICAL MANUAL**
NO. 9-2320-260-10
TECHNICAL ORDER
NO. 36A12-1C-481

CHANGE
NO.3

HEADQUARTERS
DEPARTMENT OF THE ARMY
Washington D.C., *7 June 1993*

**OPERATOR'S MANUAL**
**FOR**
**TRUCK, 5-TON, 6X6, M809 SERIES (DIESEL)**
**TRUCK, CARGO: M813, M813A1, M814;**
**TRUCK, BOLSTER, LOGGING: M815;**
**TRUCK, WRECKER, MEDIUM: M816;**
**TRUCK, DUMP: M817;**
**TRUCK, TRACTOR: M818;**
**TRUCK, TRACTOR, WRECKER: M819;**
**TRUCK, VAN, EXPANSIBLE: M820, M820A1, M820A2**
**TRUCK, STAKE, BRIDGE TRANSPORTING: M821**

TM 9-2320-260-10, 14 June 85, is changed as follows:
1. Remove old pages and insert new pages as indicated below.

2. New or changed information is indicated by a verticle bar in the margin of the page.

| **Removed Pages** | **Insert Pages** |
|---|---|
| 2-61 and 2-62 | 2-61 and 2-62 |

3. File this change sheet in front of the publication for reference purposes.

By Order of the Secretary of the Army:

GORDON R. SULLIVAN
*General, United States Army*
*Chief of Staff*

Official:

Milton H. Hamilton
MILTON H. HAMILTON
*Administrative Assistant to the*
*Secretary of the Army*
04461

Approved for public release; distribution is unlimited.

By Order of the Air Force:

MERRILL A. McPEAK
*General, United States Air Force*
*Chief of Staff*

CHARLES C. McDONALD
*General, United States Air Force*
*Commander, Air Force Logistics Command*

Distribution:
To be distributed in accordance with DA Form 12–38–E (Block 0241) requirements for TM9–2320–260–10.

TECHNICAL MANUAL
NO. 9-2320-260-10

TM 9-2320-260-10

C2

TECHNICAL ORDER
NO. 36A12-1C-481

CHANGE

No. 2

HEADQUARTERS
DEPARTMENT OF THE ARMY
Washington D.C., *28 November 1989*

**OPERATOR'S MANUAL**
**FOR**

**TRUCK, CARGO: M813, M813A1, M814**
**TRUCK, BOLSTER, LOGGING: M815**
**TRUCK, WRECKER, MEDIUM: M816;**
**TRUCK, DUMP: M817**
**TRUCK, TRACTOR: M818;**
**TRUCK, TRACTOR, WRECKER: M819;**
**TRUCK, VAN, EXPANSIBLE: M820, M820A1, M820A2;**
**TRUCK, STAKE, BRIDGE TRANSPORTING: M821**

TM 9-2320-260-10, 14 June 1985, is changed as follows:

1. Remove old pages and insert new pages as indicated below.

2. New or changed information is indicated by a vertical bar in the margin of the page.

| Remove Page | Insert Page |
|---|---|
| Warning a and Warning b | Warning a and Warning b |
| 1-11 and 1-12 | 1-11 and 1-12 |
| 2-71 and 2-72 | 2-71 and 2-72 |

3. File this change sheet in front of this publication for reference purposes.

By Order of the Secretary of the Army:

CARL E. VUONO
*General, United States Army*
*Chief of Staff*

Official:

WILLIAM J. MEEHAN II
*Brigadier General, United States Army*
*The Adjutant General*

By Order of the Secretary of the Air Force:

LARRY D. WELCH
*General, United States Air Force*
*Chief of Staff*

Official:

ALFRED G. HANSEN
*General, United States Air Force*
*Commander, Air Force Logistics Command*

**Distribution:**

**To be distributed in accordance with DA Form 12-38-R, (Block 241) Operator maintenance requirements for Truck, Diesel, 5-6on, 6x6, M809-series.**

TECHNICAL MANUAL
NO. 9-2320-260-10

TECHNICAL ORDER
NO. 36A12-1C-481

TM 9-2320-260-10

C1

CHANGE

NO. 1

HEADQUARTERS
DEPARTMENT OF THE ARMY
*Washington, D. C.*, 1 September 1988

# OPERATOR'S MANUAL
# FOR

# TRUCK, CARGO: M813, M813A1, M814; TRUCK, BOLSTER, LOGGING: M815; TRUCK, WRECKER, MEDIUM: M816; TRUCK, DUMP: M817; TRUCK, TRACTOR: M818; TRUCK, TRACTOR, WRECKER: M819; TRUCK, VAN, EXPANSIBLE: M820,M820A1, M820A2; TRUCK, STAKE, BRIDGE TRANSPORTING: M821

TM 9-2320-260-10, 14 June 1985, is changed as follows:

1. Remove old pages and insert new pages as indicated.
2. New or changed material is indicated by a vertical bar in the margin of the page.
3. Added or revised illustrations are indicated by a vertical bar adjacent to the illustration.
4. File this change sheet in front of this publication for reference purposes.

| Remove pages | Insert pages | Remove pages | Insert pages |
|---|---|---|---|
| i and ii | i and ii | 2-121 through 2-126 | 2-121 through 2-126 |
| 1-7 through 1-10 | 1-7 through 1-10 | 2-143 and 2-144 | 2-143 and 2-144 |
| 1-25 through 1-28 | 1-25 through 1-28 | 2-149 through 2-152 | 2-149 through 2-152 |
| 2-3 through 2-6 | 2-3 through 2-6 | 2-155 and 2-156 | 2-155 and 2-156 |
| 2-13 and 2-14 | 2-13 and 2-14 | 2-159 through 2-164 | 2-159 through 2-164 |
| 2-17 and 2-18 | 2-17 and 2-18 | 2-169 and 2-170 | 2-169 and 2-170 |
| 2-27 and 2-28 | 2-27 and 2-28 | 2-213 and 2-214 | 2-213 and 2-214 |
| 2-35 through 2-44 | 2-35 through 2-44 | 2-235 and 2-236 | 2-235 and 2-236 |
| 2-47 and 2-48 | 2-47 and 2-48 | A-1 and A-2 | A-1 and A-2 |
| 2-51 and 2-52 | 2-51 and 2-52 | B-1 through B-24 | B-1 through B-28 |
| 2-55 through 2-58 | 2-55 through 2-58 | C-1 through C-4 | C-1 through C-4 |
| 2-71 through 2-78 | 2-71 through 2-78 | D-5 and D-6 | D-5 and D-6 |
| 2-85 and 2-86 | 2-84.1 through 2-86 | E-1 through E-4 | E-1 through E-4 |
| 2-89 through 2-96 | 2-89 through 2-96 | Index 7 and Index 8 | Index 7 and Index 8 |
| 2-105 and 2-106 | 2-105 and 2-106 | Index 11 through Index 16 | Index 11 through Index 16 |
| 2-117 and 2-118 | 2-117 and 2-118 | | |

By Order of the Secretary of the Army:

CARL E. VUONO
*General, United States Army*
*Chief of Staff*

Official:

WILLIAM J. MEEHAN II
*Brigadier General, United States Army*
*The Adjutant General*

By Order of the Secretary of the Air Force:

LARRY D. WELCH
*General, United States Air Force*
*Chief of Staff*

Official:

ALFRED G. HANSEN
*General, United States Air Force*
*Commander, Air Force Logistics Command*

**Distribution:**

**To be distributed in accordance with DA Form 12-38-R, (Block 241) Operator maintenance requirements for Truck, Diesel, 5-6on, 6x6, M809-series.**

TECHNICAL MANUAL
NO. 9- 2320-260-10
TECHNICAL ORDER
NO. 36A12-1C-481

HEADQUARTERS
DEPARTMENT OF THE ARMY

Washington, DC 14 JUNE 1985

# OPERATOR'S MANUAL
# FOR
# 5-TON, 6X6, M809 SERIES TRUCKS (DIESEL)

| Model | | NSN Without Winch | NSN With Winch |
|---|---|---|---|
| Chassis | M809 | 2320-00-050-8842 | 2320-00-048-8841 |
| Chassis | M809A1 | | 2320-00-050-8941 |
| Chassis | M810 | 2320-00-051-0586 | 2320-00-051-0585 |
| Chassis | M811 | 2320-00-050-8986 | 2320-00-050-8985 |
| Chassis | M811A1 | | 2320-00-050-8989 |
| Chassis | M811A2 | | 2320-00-050-9005 |
| Chassis | M812 | | 2320-00-050-9011 |
| Chassis, Rocket Launcher | M812A1 | | 2320-00-050-9040 |
| Truck, Cargo | M813 | 2320-00-050-8902 | 2320-00-050-8890 |
| | M813A1 | 2320-00-050-8913 | 2320-00-050-8905 |
| | M814 | 2320-00-050-8988 | 2320-00-050-8987 |
| Truck, Bolster Logging | M815 | | 2320-00-050-8927 |
| Truck, Wrecker, Medium | M816 | | 2320-00-051-0489 |
| Truck, Dump | M817 | 2320-00-050-8970 | 2320-00-051-0589 |
| Truck, Tractor | M818 | 2320-00-050-8984 | 2320-00-050-8978 |
| Truck, Tractor, Wrecker | M819 | | 2320-00-050-9004 |
| Truck, Van, Expansible | M820 | | 2320-00-050-9006 |
| | M820A1 | | 2320-00-050-9007 |
| | M820A2 | | 2320-00-050-9010 |
| Truck, Stake, Bridge Transporting | M821 | | 2320-00-050-9015 |

* This manual supersedes TM 9-2320-260-10-1, 10-2, 10-3, and 10-4, dated 20 August, 1980.

This publication is required for official use or for administrative or operational purposes only. Distribution is limited to U.S. Government Agencies. Other requests for this document must be referred to: Commander, U.S. Army Tank-automotive and Armaments Command, Attn: AMSTA-LC-CIP-WT, Rock Island, IL 61299-7630.

## HOW TO USE THIS MANUAL

**This manual:**

**a.** Contains information for safe and efficient operation of your equipment. These instructions provide you with a general knowledge of the equipment, its characteristics, and usual and unusual operation procedures.

**b.** Provides you with troubleshooting procedures, so that you can keep your equipment operating properly.

## HOW TO USE THIS MANUAL (Cont'd)

**c.** Provides best possible operating instructions under most circumstances. Multiple emergencies, adverse weather, terrain, etc., may require modification of these procedures.

**d.** Takes a "positive approach" and normally states only what you can do. Unusual operations or configurations are prohibited unless specifically included. Before attempting any questionable operation, which is not specifically permitted in this manual, clearance must be obtained fromyour supervisor.

**REPORTING ERRORS AND RECOMMENDING IMPROVEMENTS**

You can help improve this publication. If you find any mistakes or if you know of a way to improve the procedures, please let us know. Submit your DA Form 2028 (Recommended Changes to Publications and Blank Forms), through the Internet, on the Army Electronic Product Support (AEPS) website. The Internet address is http://aeps.ria.army.mil. If you need a password, scroll down and click on "ACCESS REQUEST FORM." The DA Form 2028 is located in the ONLINE FORMS PROCESSING section of the AEPS. Fill out the form and click on SUBMIT. Using this form on the AEPS will enable us to respond quicker to your comments and better manage the DA Form 2028 program. You may also mail, fax or E-mail your letter or DA Form 2028 direct to: AMSTA-LC-CI Tech Pubs, TACOM-RI, 1 Rock Island Arsenal, Rock Island, IL 61299-7630. The E-mail address is TACOM-TECH-PUBS@ria.army.mil. The fax number is DSN 793-0726 or Commercial (309) 782-0726.


| | | Page |
|---|---|---|
| | How to use this manual | i |
| CHAPTER 1. | INTRODUCTION | 1-1 |
| Section I. | General information | 1-1 |
| II . | Equipment description and data | 1-11 |
| III . | Technical principles of operation | 1-28 |
| CHAPTER 2. | OPERATING INSTRUCTIONS | 2-1 |
| Section I. | Controls and indicators | 2-1 |
| II . | Preventive maintenance checks and services | 2-34 |
| III . | Operation under usual conditions | 2-72 |
| IV. | Operation under unusual conditions | 2-199 |
| V. | Operation of auxiliary equipment (special purpose kits) | 2-213 |
| CHAPTER 3. | MAINTENANCE INSTRUCTIONS | 3-1 |
| Section I. | Tools and equipment | 3-1 |
| II. | Lubrication | 3-1 |
| III. | Troubleshooting | 3-3 |
| IV. | Maintenance procedures | 3-14 |
| APPENDIX A . | REFERENCES | A-1 |
| APPENDIX B. | COMPONENTS OF END ITEM LIST | B-1 |
| Section I. | Introduction | B-1 |
| II. | Components of end item list | B-4 |
| III. | Basic issue items list | B-5 |
| APPENDIX C. | ADDITIONAL AUTHORIZATION LIST | C-1 |
| APPENDIX D. | EXPENDABLE/DURABLE SUPPLIES AND MATERIALS LIST | D-1 |
| APPENDIX E. | STOWAGE AND SIGN GUIDE FOR COMPONENTS OF END ITEM, BASIC ISSUE ITEMS, AND APPLICABLE ADDITIONAL AUTHORIZATION LIST ITEMS | E - 1 |

# CHAPTER 1
# INTRODUCTION

## Section I. GENERAL INFORMATION

### 1-1. SCOPE

a. This manual contains instructions for operating and servicing M809 series vehicles. These vehicles are:

(1) M813 Cargo Truck WO/W and W/W.

(2) M813A1 Cargo Truck WO/W and W/W (Dropside).

(3) M814 Cargo Truck WO/W and W/W (XLWB).

(4) M815 Bolster Logging Truck W/W.

(5) M816 Medium Wrecker Truck W/W.

(6) M817 Dump Truck WO/W and W/W.

(7) M818 Tractor Truck WO/W and W/W.

(8) M819 Tractor Wrecker Truck W/W.

(9) M820 and M820A1 Expansible Van Truck WO/W.

(10) M820A2 Expansible Van Truck WO/W (W/HLG).

(11) M821 Bridge Transporting Stake Truck WO/ W.

b. The material presented here provides operators with information and procedures needed to provide the safest and most efficient operation of these vehicles. This information includes:

(1) Description of each vehicle and its operation.

(2) The purpose of each vehicle.

(3) Vehicle limitations such as load limits.

(4) Cautions and warnings to operators regarding safety to personnel and equipment.

(5) The function of all panel controls and indicators.

(6) The function of all body controls and indicators.

(7) How and when to use special purpose kits.

(8) Operator maintenance checks and service procedures.

(9) Troubleshooting procedures to be followed by operators if the vehicle malfunctions.

(10) Operator forms and records.

TA 094185

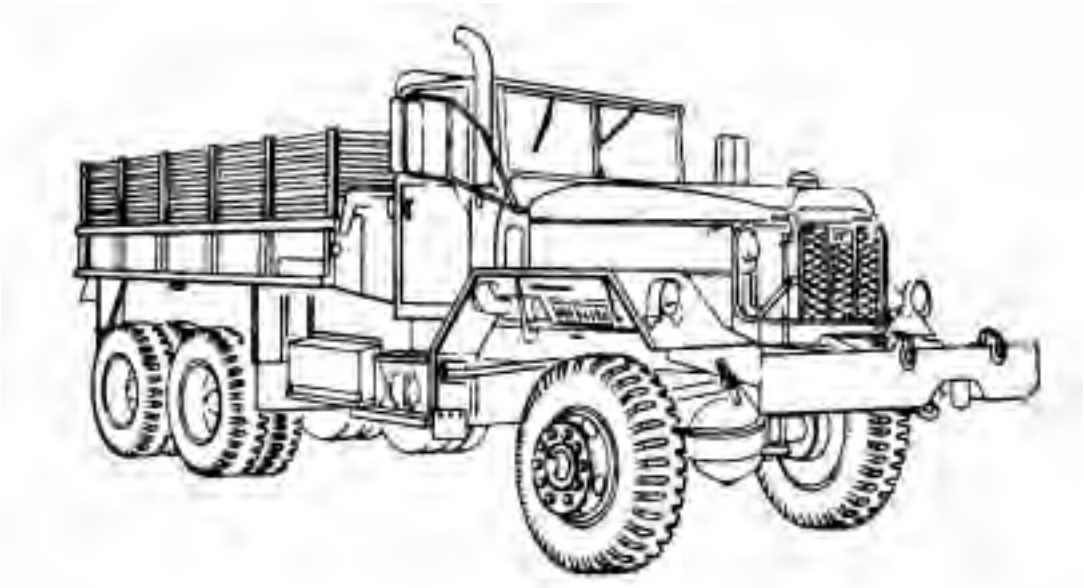

**5-TON, 6X6, CARGO TRUCK WO/W AND W/W (M813)**
**(RIGHT FRONT VIEW)**

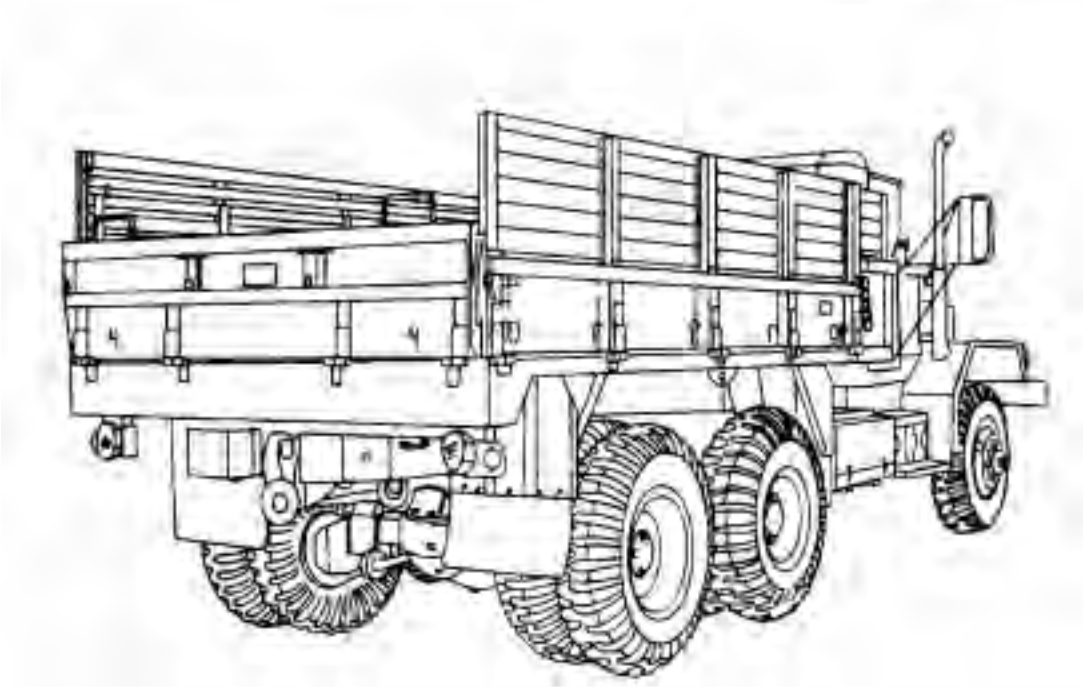

**5-TON, 6X6 CARGO TRUCK, DROPSIDE WO/W AND W/W (M813A1)**
**(RIGHT REAR VIEW)**

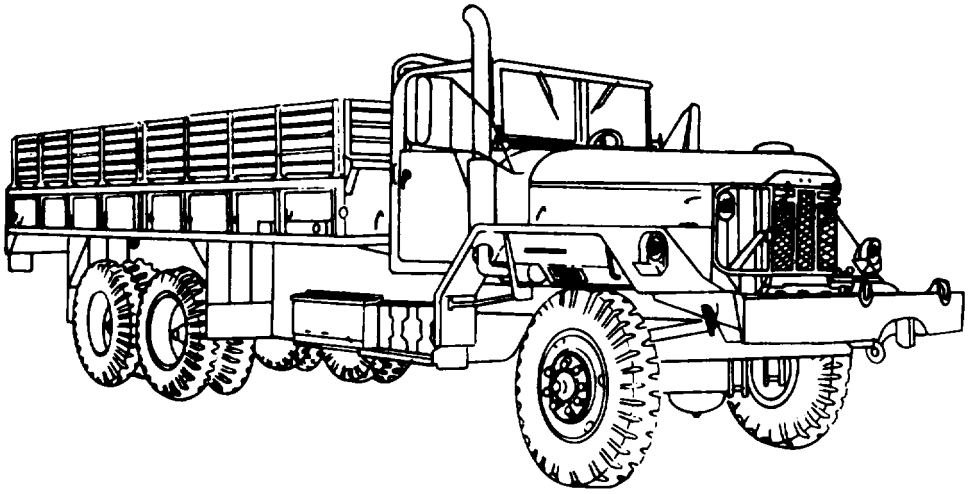

5-TON, 6X6, CARGO TRUCK, EXTENDED CARGO BODY
WO/W AND W/W (M814)
(RIGHT FRONT VIEW)

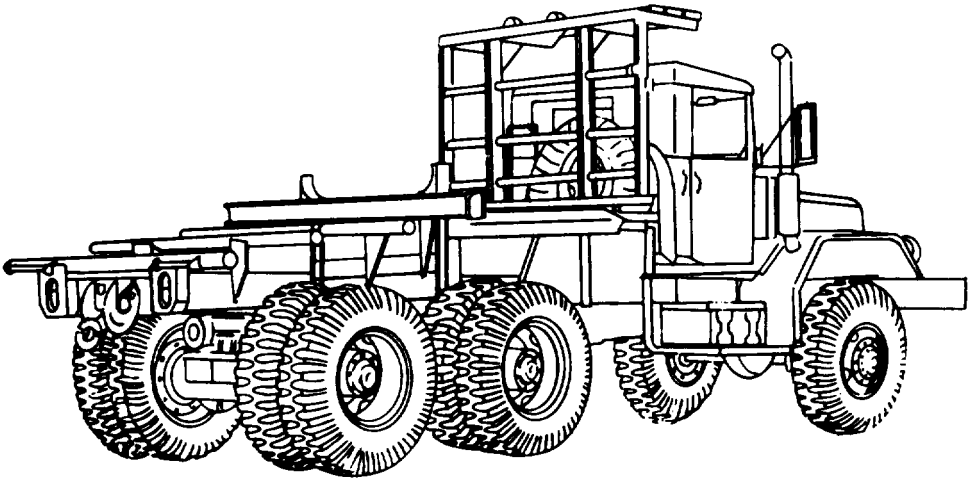

5-TON, 6X6, BOLSTER LOGGING TRUCK W/W (M815)
(RIGHT REAR VIEW)

TA 094187

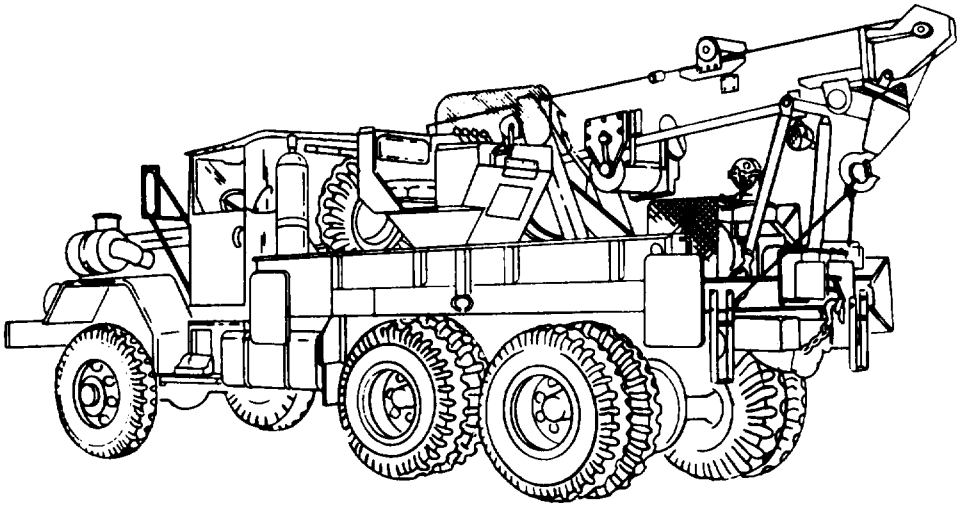

5-TON, 6X6, MEDIUM WRECKER TRUCK W/W (M816)
(LEFT REAR VIEW)

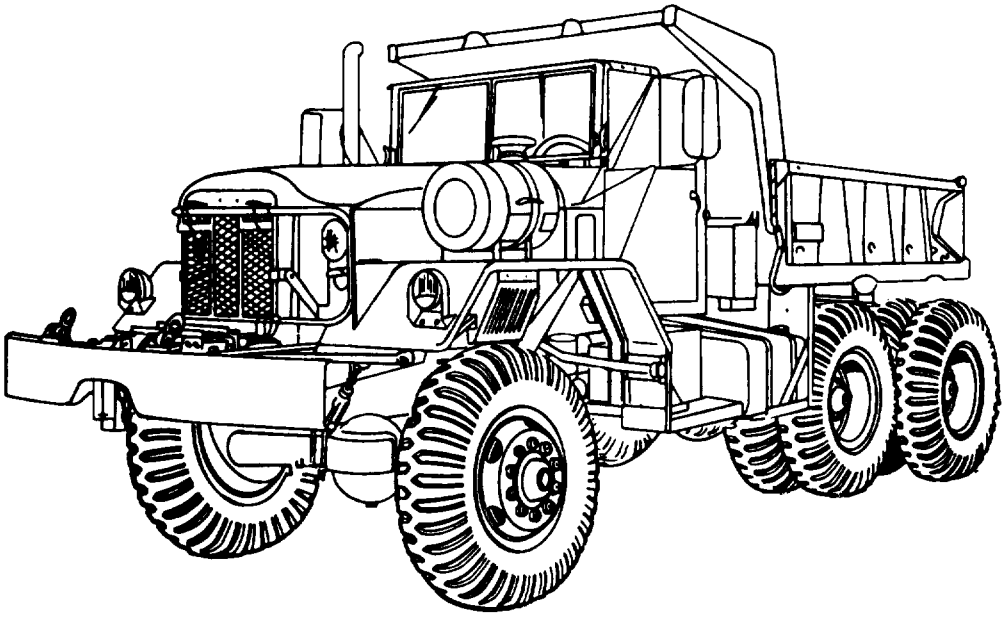

5-TON, 6X6, DUMP TRUCK WO/W AND W/W (M817)
(LEFT FRONT VIEW)

TA 094188

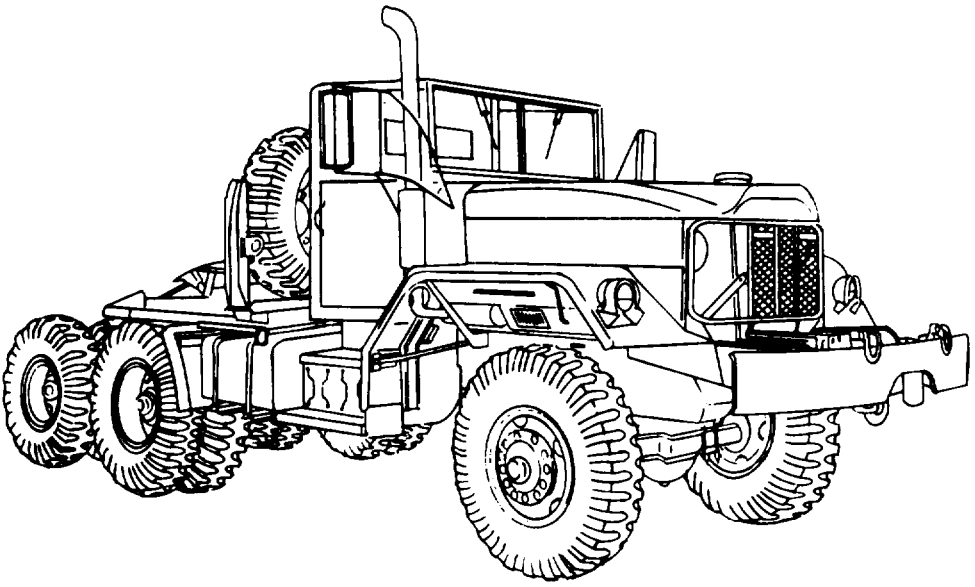

5-TON, 6X6, TRACTOR TRUCK WO/W AND W/W (M818)
(RIGHT FRONT VIEW)

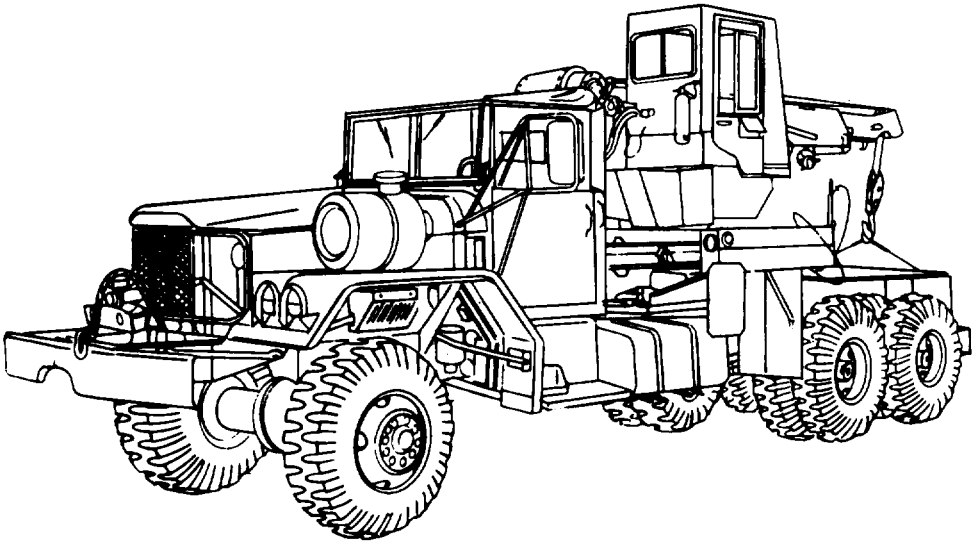

5-TON, 6X6, TRACTOR WRECKER TRUCK W/W (M819)
(LEFT FRONT VIEW)

TA 094189

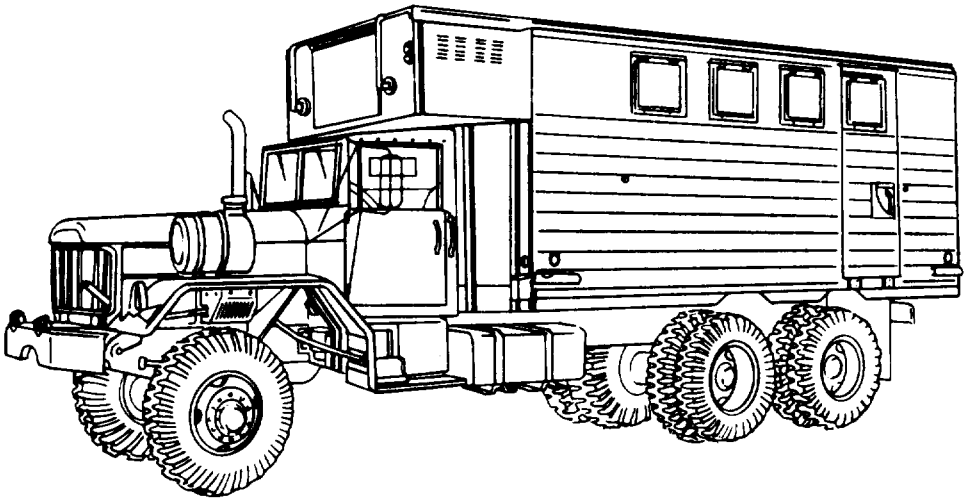

5-TON, 6X6, EXPANSIBLE VAN TRUCK WO/W (M820)
(LEFT FRONT VIEW)

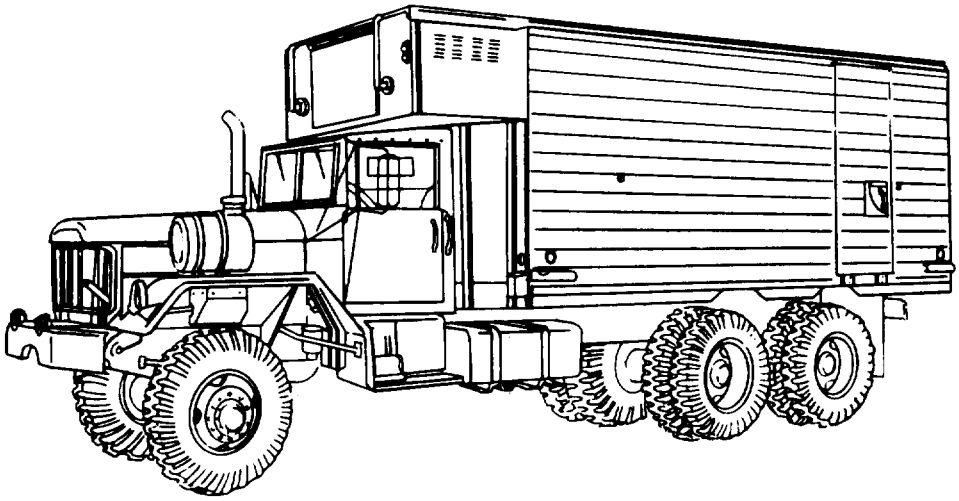

5-TON, 6X6, EXPANSIBLE VAN TRUCK WO/W (M820A1)
(LEFT FRONT VIEW)

TA 094190

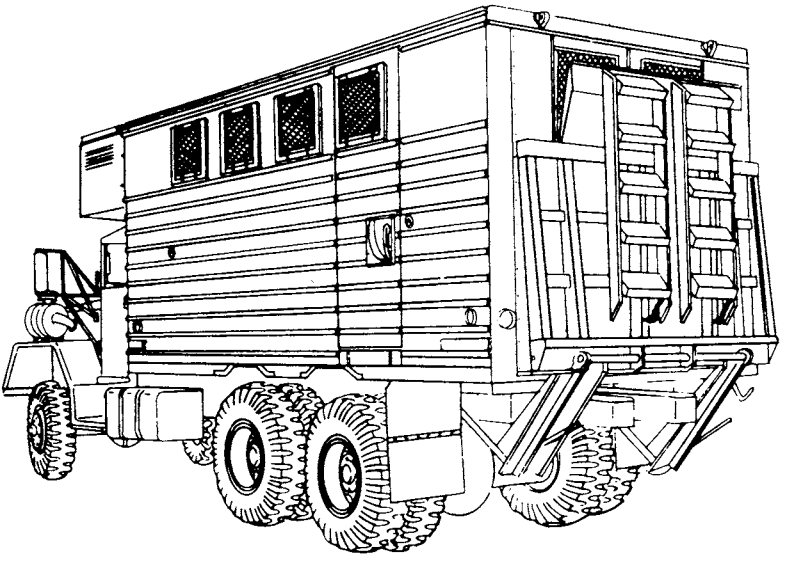

**5-TON, 6X6, EXPANSIBLE VAN TRUCK WITH HYDRAULIC LIFTGATE WO/W (M820A2) (LEFT REAR VIEW)**

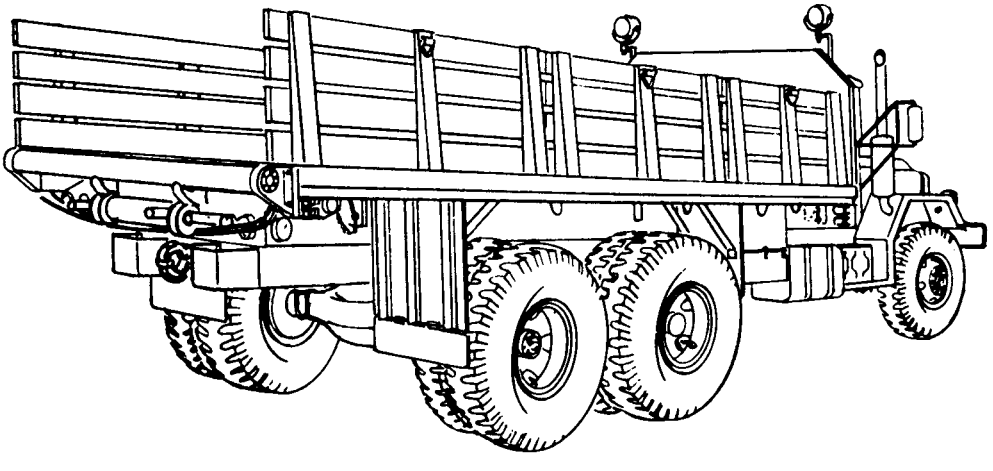

**5-TON, 6X6 BRIDGE TRANSPORTING TRUCK WO/W (M821) (RIGHT REAR VIEW)**

## 1-2. FORMS AND RECORDS

**Vehicle Maintenance Forms and Records.** The forms and records that must be kept up to date by operators are those prescribed by DA Pam 738-750.

## 1-3. DESTRUCTION OF MILITARY EQUIPMENT TO PREVENT ENEMY USE

**Instructions for Equipment Destruction.** Follow procedures given in TM 750-244-6 for procedures and destruction of tank-automotive equipment to prevent enemy use.

## 1-4. REPORTING EQUIPMENT IMPROVEMENT RECOMMENDATIONS

**a. Equipment Improvement Recommendations (EIR).** If your vehicle needs improvement, let us know. Send us an EIR. You, the user, are the only one who can tell us what you don't like about your equipment. Let us know why you don't like the design or performance. The preferred method for submitting QDRs is through the Army Electronic Product Support (AEPS) website under the Electronic Deficiency Reporting System (EDRS). The web address is: https://aeps.ria.army.mil. This is a secured site requiring a password that can be applied for on the front page of the website. If the above method is not available to you, put it on an SF 368, Product Quality Deficiency Report (PQDR), and mail it to us at: Department of the Army, U.S. Army Tank-automotive and Armaments Command, ATTN: AMSTA-TR-E/PQDR MS 267, 6501 E. 11 Mile Road, Warren, MI 48397-500. We'll send you a reply.

**b. Equipment Improvement Report and Maintenance Digest (EIR MD).** The quarterly Equipment Improvement Report and Maintenance Digest, TB 43-0001-62 series, contains valuable field information on the equipment covered in this manual. The information in the TB 43-0001-62 series is compiled from some of the Equipment Improvement Reports that you prepared on the vehicles covered in this manual. Many of these articles result from comments, suggestions, and improvement recommendations that you submitted to the EIR program. The TB 43-0001-62 series contains information on equipment improvements, minor alterations, proposed Modification Work Orders (MWOs), warranties (if applicable), actions taken on some of your DA Form 2028s (Recommended Changes to Publications and Blank Forms), and advance information on proposed changes that may affect this manual. The information will help you in doing your job better and will help in keeping you advised of the latest changes to this manual. Also refer to DA Pam 25-30, Consolidated Index of Army Publications and Blank Forms, and appendix A, References, of this manual. For those with access to the World Wide Web (WWW), the EIR MD can be viewed through the Army Electronic Product Support. The site is http://aeps.ria.army.mil.

## 1-5. VEHICLE/BRIDGE CLASSIFICATION

**a.** Refer to table 1-1 to find your vehicle class number. Table columns are as follows:

E – Class number of vehicle with no payload.
C – Class number of vehicle with cross-country payload.

**b.** Bridges along your route may be marked with a class number. The bridge class number shows the safe capacity of the bridge. If your vehicle class number is equal to or less than the bridge class number, the bridge will hold your vehicle. If your vehicle class number is greater than the bridge class number, your vehicle is too heavy for the bridge: DO NOT CROSS.

**c.** For more information, refer to FM 5-170, Route Reconnaissance and Classification.

*Table 1-1. Vehicle Class Information.*

| Vehicle | Model | NSN | Class Number | |
|---|---|---|---|---|
| | | | E | C |
| Cargo | M813 | 2320-00-050-8902 and<br>2320-00-050-8890 | 9<br>9 | 15<br>15 |
| | M813A1 | 2320-00-050-8913 and<br>2320-00-050-8905 | 9<br>9 | 15<br>15 |
| | M814 | 2.320-00-050-8987 and<br>2320-00-050-8988 | 10<br>10 | 16<br>16 |
| Bolster | M815 | 2320-00-050-8927 | 10 | 16 |
| Medium Wrecker | M816 | 2320-00-051-0489 | 18 | 24 |
| Dump | M817 | 2320-00-050-8970 and<br>2320-00-051-0589 | 11<br>10 | 16<br>16 |
| Tractor | M818 | 2320-00-050-8984 and<br>2320-00-050-8978 | 9<br>10 | 17<br>18 |
| Tractor Wrecker | M819 | 2320-00-050-9004 | 16 | 22 |
| Expansible Van | M820<br>M820A1<br>M820A2 | 2320-00-050-9006<br>2320-00-050-9007<br>2320-00-050-9010 | 11<br>11<br>12 | 14<br>14<br>15 |
| Bridge Transporter | M821 | 2320-00-050-9015 | 12 | 17 |

## 1-6. MILITARY TERMS AND MEASUREMENTS ABBREVIATIONS

### LIST OF ABBREVIATIONS

All abbreviations that appear in this manual are listed below

AAL . . . . . .Additional Authorization List
BII . . . . . .Basic IssueItems
BE . . . . . Blackout
BAT . . . . . .Bright
CC . . . . . Cross-Country
COEI . . . . . .Components of End Item
CW . . . . . .Chain (and) Wire Rope (lubricating oil)
DA . . . . . Department of Army
DFA . . . . . Diesel Fuel (arctic)
EIR'S . . . . . .Equipment Improvement Recommendations
GAA . . . . . Grease, Automotive and Artillery
GO . . . . . Gear Oil
GOD . . . . . Gear Oil (sub-zero)
H . . . . . Highway
LO . . . . . Lubrication Order
MAC . . . . . Maintenance Allocation Chart
NBC . . . . . Nuclear, Biological, or Chemical
NON . . . . . National Stock Number
OE/HDO . . . . . Oil Engine/ Heavy Duty Oil
OVA . . . . . .. Oil. Engine (arctic)
Papa . . . . . Paragraph
pg. . . . . .Page
PMCS . . . . . .Preventive Maintenance Checks and Services
PA . . . . . Pair
PTO . . . . . .PowerTakeoff

TA 094193

## LIST OF ABBREVIATIONS (Cont'd)

| | |
|---|---|
| rpm | revolutions (turns) per minute |
| TM | Technical Manual |
| W/HLG | With Hydraulic Liftgate |
| w/o | without |
| wo/w | without winch |
| w/ | with |
| w/w | with winch |
| XLWB | Extra Long Wheelbase |
| cm | centimeter |
| equip | equipment |
| ft | feet/foot |
| g | gram |
| gal | gallon |
| in | inch |
| km | kilometer |
| km/h | kilometers per hour |
| kPa | kilopascal |
| l | liter |
| lb | pound |
| lb-ft | pound-feet |
| lg | long |
| m | meter |
| mi | mile |
| mpg | miles per gallon |
| mph | miles per hour |
| N•m | Newton meter |
| oz | ounce |
| psi | pounds per square inch |
| pt | pint |
| qt | quart |
| yd | yard |

## 1-7. MILITARY TERMS AND COMMON TERMS CROSS REFERENCE LIST

### MILITARY TERMS AND COMMON TERMS CROSS REFERENCE LIST

The following is an alphabetical list of commonly used military terms that appear in this manual. This list is cross-referenced to commonly understood terms used in everyday speech that mean the same thing.

| | |
|---|---|
| Engine Coolant | Anti-freeze/water |
| Exhaust Stack | Tailpipe |
| Failsafe Unit | Warning buzzer |
| Fording | Crossing through water |
| Grade | Steepness of hill |
| Hydraulics | Operated by oil pressure |
| Inclement Weather | Bad weather (rain, snow, high winds) |
| Indicators | Gages, warning lights, etc. |
| Mired | Stuck in mud or snow |

TA 094194

## MILITARY TERMS AND COMMOM TERMS CROSS REFERENCE LIST (Cont'd)

Operation . . . . . .Task
operator . . . . . Driver
Slaving . . . . . Jump starting
Splash Shields. . . . . Mud flaps
Transport . . . . . To carry
Turning Radius . . . . . Distance needed to make a U-turn
Usual Conditions . . . . . Good roads, good weather
Steering Knuckle Boot . . . . . C-V boot
Pauline . . . . . Canvas, tarp

## Section II. EQUIPMENT DESCRIPTION AND DATA

### 1-8. GENERAL DESCRIPTION

a. The 5-ton, 6x6, M809 series trucks are tactical vehicles designed for use over all types of roads. highways, and cross-country terrain. M809 series vehicles ford hard-bottom water crossings up to 30 inches (76.2 centimeters) without a deepwater fording kit, and 78 inches (198.1 centimeters) with the kit. A five-speed manual transmission and a two-speed transfer provide 10 overall speed ranges. All are equipped with a rear towing pintle hook. Two front shackles and a pin on top of the rear springs provide a ready means of lifting the trucks for transportation.

**WARNING**

**This vehicle has been designed to operate safely and efficiently within the limits specified in this TM. Operation beyond these limits is prohibited LAW AR 70-1 without written approval from the Commander, U.S. Army Tank-Automotive Command, ATTN: AMSTA-CM-S, Warren, MI 48397-5000.**

**b.** The M809 series trucks are powered by a 240 horsepower Cummins (NHC-250) diesel engine. All trucks, except the M815 and models equipped with the arctic winterization kit, have canvas cab tops. The M815 and those with arctic kits have metal cab tops. All vehicles are equipped with a mounted spare tire.

### 1-9. DESIGNATIONS

a. These trucks are called 5-ton, 6x6, M809 series vehicles.

(1) The '5-ton" refers to the vehicle's load limit rating.

(2) The "6x6" means that each vehicle has six driving wheels.

(3) The "M809"' is a code number given to this series of trucks to distinguish it from other series.

**b.** The 5-ton load limit rating of the M809 series trucks indicates the maximum amount of cargo weight the vehicle's axles and frame can withstand.

## 1-10. CARGO TRUCKS W/W AND WO/W: M813, M813A1, AND M814

**a. Differences.** Three models of cargo trucks are covered in this manual. The M813 and M813A1 cargo trucks have 7 x 14-foot (2.14 x 4.27 meters) flatbed boxes. The M814 cargo truck has a 7 x 20-foot (2.14 x 6.1 meters) cargo box. The M813A1 truck has hinged dropsides with 147-1/2-inch (372.51 centimeters) access openings on both sides. A spare wheel is mounted on the left forward side at rear of cargo box on both M813 and M813A1 trucks. The M814 spare wheel carrier is mounted to truck siderails at rear of cab. All trucks have removable front and side racks, troop seats. and a hinged tailgate. Bows and tarpaulins can be installed, if required, on each of the three cargo trucks.

**b. Purpose of the Vehicles.** The M813, M813A1, and M814 cargo trucks are used to transport equipment, materials. and/or personnel. The M813 and M814 cargo trucks have permanent steel-welded sides. For this reason, they are preferred vehicles for use in transporting bulky payloads that may shift during transit. The M813A1 cargo truck has hinged steel sides that can be folded down and out of the way of loading and unloading operations. The M813 and M813A1 vehicles provide 550 cubic feet (15.4 cubic meters) of cargo space, and the M814 vehicle, which is 72 inches (183 centimeters) longer, provides 744 cubic feet (20.8 cubic meters) of cargo space. Some M814 vehicles are equipped with front winch. This feature makes it more versatile for operations under difficult field conditions.

**c. Special Limitations.** The M813 and M814 cargo trucks are not suited for operations that require easy side access to cargo. An example of this is a ground-to-truck forklift operation. The M813A1 dropside cargo truck is preferred for this operation. The M814 cargo truck is not suited for operations requiring maneuverability in limited spaces because of its longer cargo body.

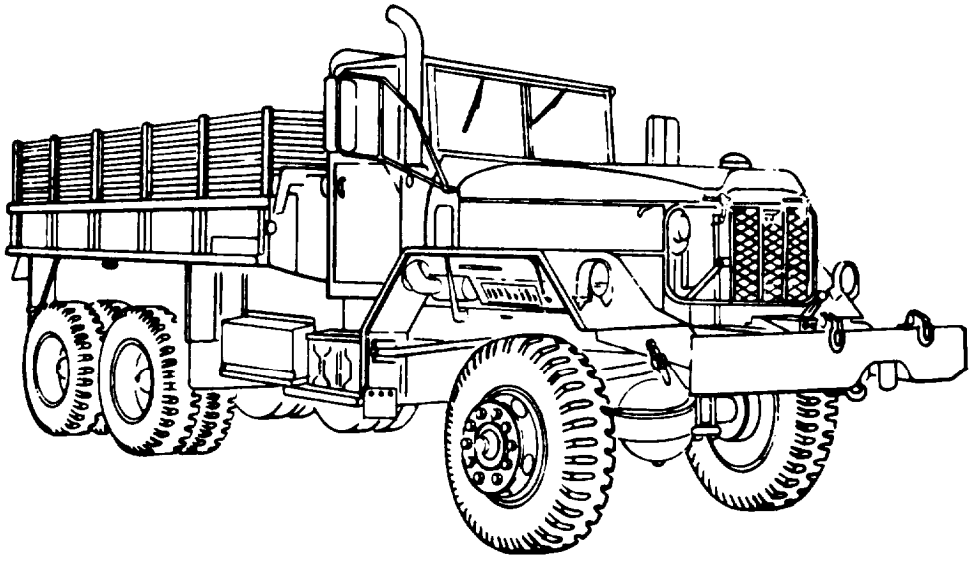

**CARGO TRUCK (M813)**
**(RIGHT FRONT VIEW)**

TA 094196

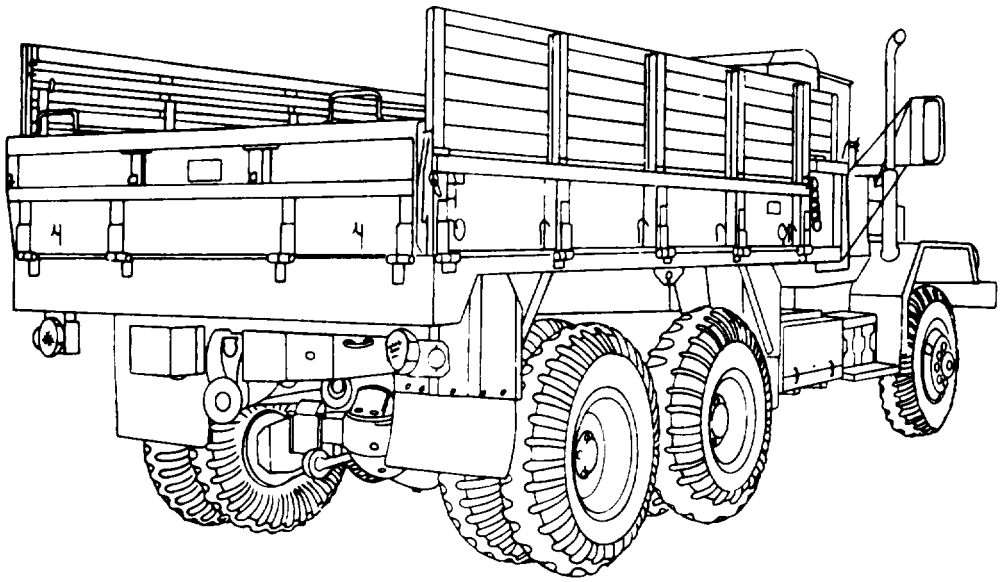

CARGO TRUCK, DROPSIDE (M813A1)
(RIGHT REAR VIEW)

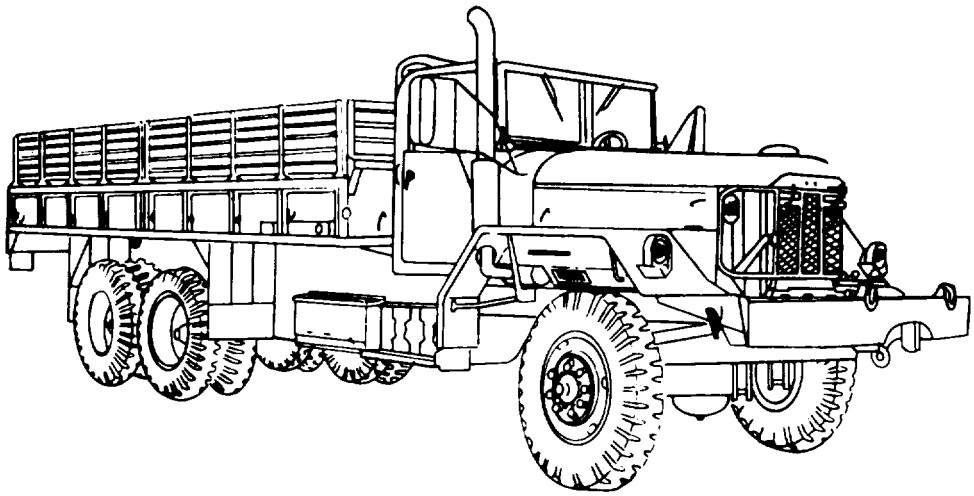

CARGO TRUCK (M814)
(RIGHT FRONT VIEW)

TA 094197

## 1-11. BOLSTER LOGGING TRUCK W/W: M815

**a. Purpose of the Vehicle.** The M815 bolster truck and trailer combination is designed to transport utility poles, bridge sections, and logs. The trailer is carried on the truck when not in use.

**b. Physical Description.** The M815 bolster truck is equipped with a cab protector, front winch, midships winch, bolster assembly, and bolster trailer carrier. The carrier is connected to the truck frame to support the M796 bolster trailer in the loaded position. Ramps are used for loading and unloading the bolster trailer, Mounting brackets for the ramps are located at the rear section of the trailer carrier.

The bolster trailer M796 has two bolster assemblies mounted over the midsection of the trailer frame, an adjustable reach, a bolster assembly mounted on the reach, safety chains, failsafe air-over-hydraulic wheel brakes, separate parking brake for both front wheels, an intervehicular electrical cable, two airbrake hoses, and a retractable landing gear mounted on the reach. Refer to TM 9-2330-287-14 for additional trailer operation information.

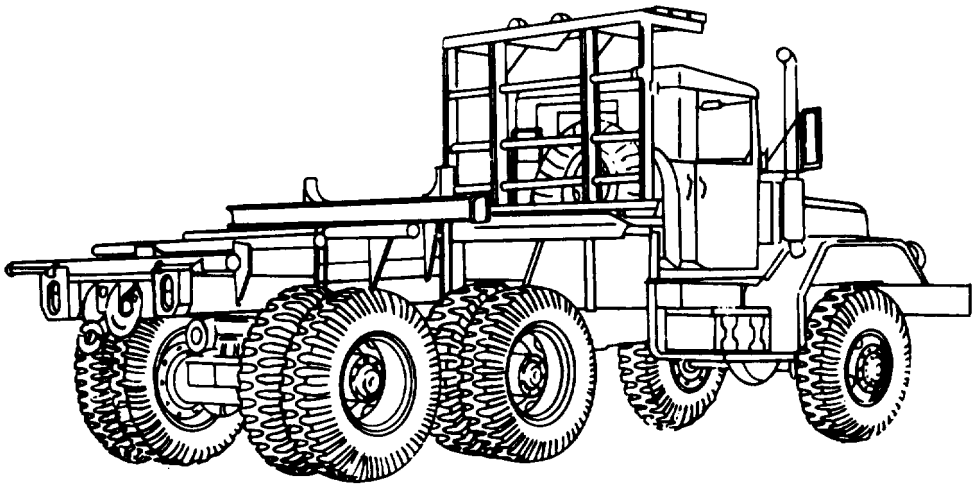

BOLSTER LOGGING TRUCK (M815)
(RIGHT REAR VIEW)

TA 094198

## 1-12. MEDIUM WRECKER TRUCK W/W: M816

**a. Purpose of the Vehicle.** The medium wrecker (M816) is used to return disabled vehicles for repair, and to free mired vehicles. The vehicle crane is used for lifting operations of up to 20,000 pounds (9,080 kilograms). Examples of M816 crane operations are:

**(1)** Removing and replacing engines, power packs, and gun tubes.

**(2)** Loading and unloading munitions.

**b. Performance.** The medium wrecker (M816) has a hydraulically-powered, engine-driven crane, and drive shaft-driven front winch, and rear winch. The front winch is used mainly for freeing the medium wrecker when it becomes mired, or for assisting rear winch by acting as an anchor point. The rear winch is used as a heavy-duty apparatus because of its heavy pulling capability. The crane, which can extend from 10 to 18 feet (3.05 to 5.49 meters), is used for lifting loads up to 20,000 pounds (9,080 kilograms).

**c.** Deleted

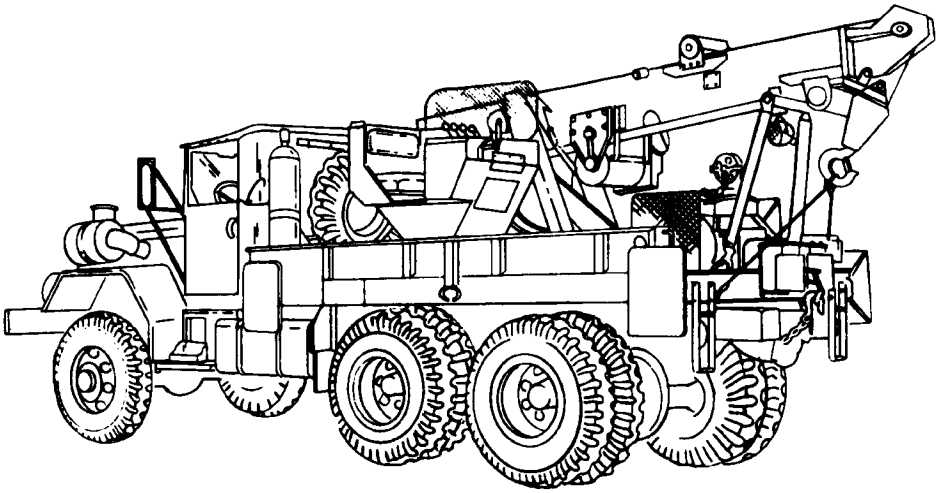

**MEDIUM WRECKER TRUCK (M816)**
**(LEFT REAR VIEW)**

## 1-13. DUMP TRUCK W/W AND WO/W: M817

**a. Purpose of the Vehicle.** The M817 dump truck is used to transport materials such as sand, gravel, and stone. It may also haul scrap, rubble, or other waste materials. These vehicles operate on or off the road with load limits up to 10,000 pounds (4,540 kilograms). Fully loaded, this vehicle can tow trailers with up to 15,000 pounds (6,810 kilograms). This vehicle has a welded-steel dump body. The forward end of the solid dump body extends up and over the vehicle cab to protect it from damage during loading. Troop seats may be positioned for troop transport operations.

**b. Performance.** This truck has a tailgate that can be opened at either the top or bottom, allowing operation as a regular (end load) type, rocker type, or as a spreader type dump truck.

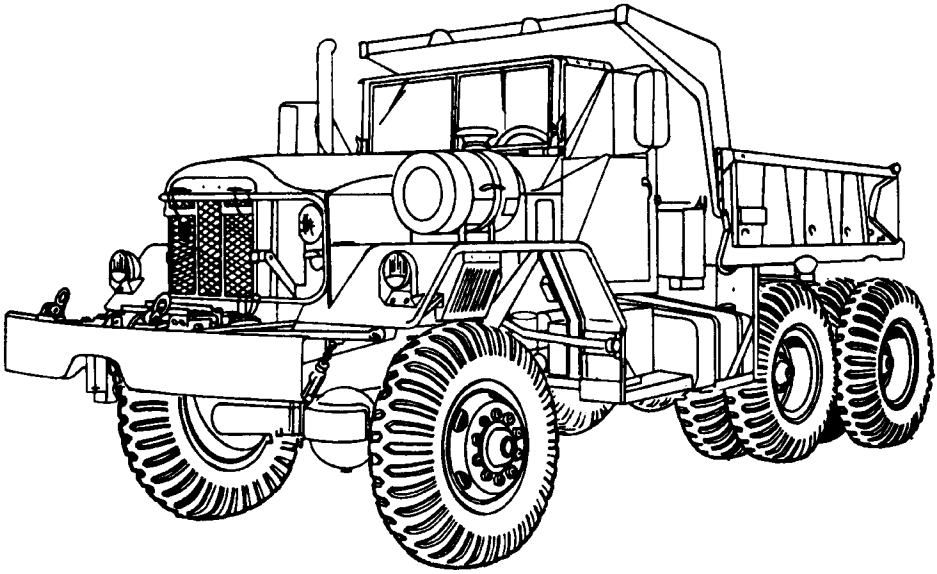

**DUMP TRUCK (M817)**
**(LEFT FRONT VIEW)**

## 1-14. TRACTOR TRUCK W/W AND WO/W: M818

**a. Purpose of the Vehicle.** The M818 tractor truck has a fifth wheel used to haul semitrailer loads up to 37,500 pounds (17,025 kilograms) maximum (refer to table 1-3). When connected to a semitrailer, the fifth wheel pivots up, down, and sideways, to allow for changes in the road. This vehicle comes equipped with a front winch, making it more versatile in tactical operations under difficult field conditions. This vehicle also comes equipped without a front winch.

**b. Performance.** The M818 tractor truck can ford hard-bottom water crossings up to 30 inches (76.2 centimeters) without a deepwater fording kit, and 78 inches (199.1 centimeters) with the kit.

**c. Special Limitations.** Fifth wheel cannot pivot more than 21 degrees up, 15 degrees down, or 7 degrees sideways. For this reason, semitrailer operations cross-country are limited to gradual grades over known terrain.

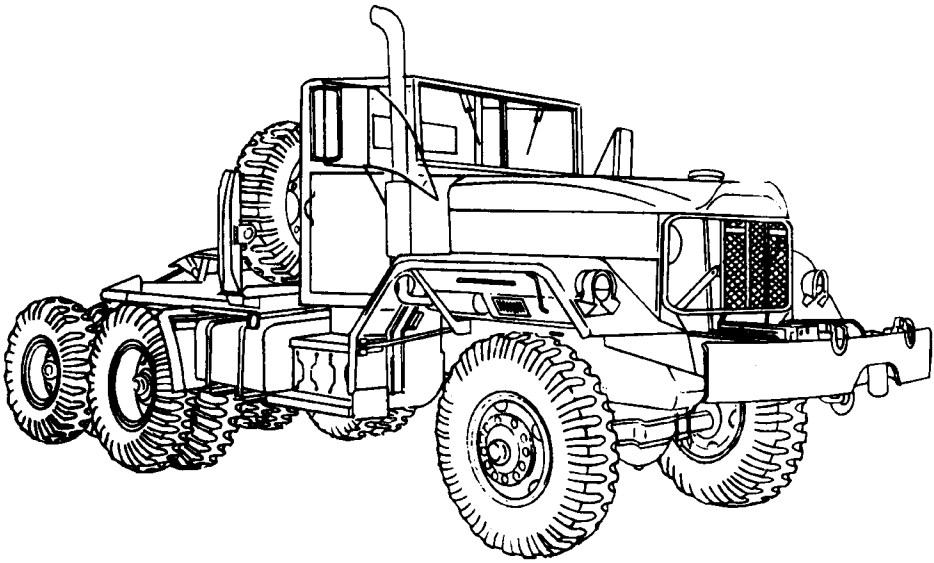

**TRACTOR TRUCK (M818)**
**(RIGHT FRONT VIEW)**

## 1-15. TRACTOR WRECKER TRUCK W/W: M819

**a. Purpose of the Vehicle.** The M819 tractor wrecker truck has a hydraulically-powered, engine-driven crane, a front winch equipped with a level winding device, and a fifth wheel for pulling a trailer. The crane, which can be extended from 11-1/2 to 26 feet (3.51 to 9.93 meters), is used for lifting loads up to 20,000 pounds (9,080 kilograms). the vehicle is used for freeing mired vehicles, lifting materials for loading and unloading operations, and for towing trailers.

**b. Performance.** The M819 tractor wrecker truck has a hydraulically-operated crane with three position booms, capable of 270 degrees rotation and approximately 45 degree elevation. Afifth wheel, or semitrailer coupler, is mounted on rear of M819 tractor wrecker truck. The base of the fifth wheel pivots on a walking beam which pivots on the subbase. This constructions permits the fifth wheel to move in all planes. The front winch is used to free vehicle should it become mired.

**c.** Deleted

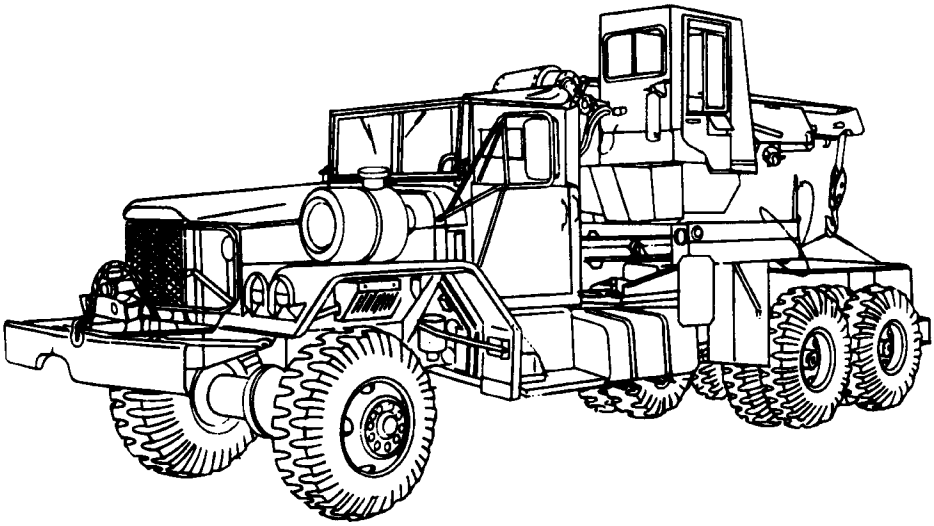

**TRACTOR WRECKER TRUCK (M819)**
**(LEFT FRONT VIEW)**

## 1-16. EXPANSIBLE VAN TRUCK WO/W: M820, M820A1, AND M820A2

**a. Differences.** The M820 expansible van truck has windows, heating and air-conditioning systems, and uses outside electric power. The M820A1 expansible van truck does not have windows, nor air-conditioning system; but does have a heating system. The M820A2 expansible van truck has windows, hydraulic liftgate, heating, and air-conditioning system.

**b. Purpose of the vehicles.** The M820 and M820A2 expansible vans transport electronic base stations into the field. The M820A1 expansible van can be used for the same operation. In the traveling position, van truck bodies are 17 feet long by 8 feet wide (5.2 meters long by 2.4 meters wide). When in the field, van sides are expanded to give a width of nearly 14 feet (4.3 meters). They may serve as communication stations or electronic repair stations. The vans are designed to carry up to 5,000 pounds (2,270 kilograms) of equipment into the field. The M820A2 expansible van is equipped with a hydraulic liftgate, which makes it the preferred vehicle to use when heavy, delicate electronic equipment has to be moved in or out of van.

**c. Performance.** All three expansible vans have a minimum turning radius of 47 feet, 4 inches (14.54 meters, 102 centimeters).

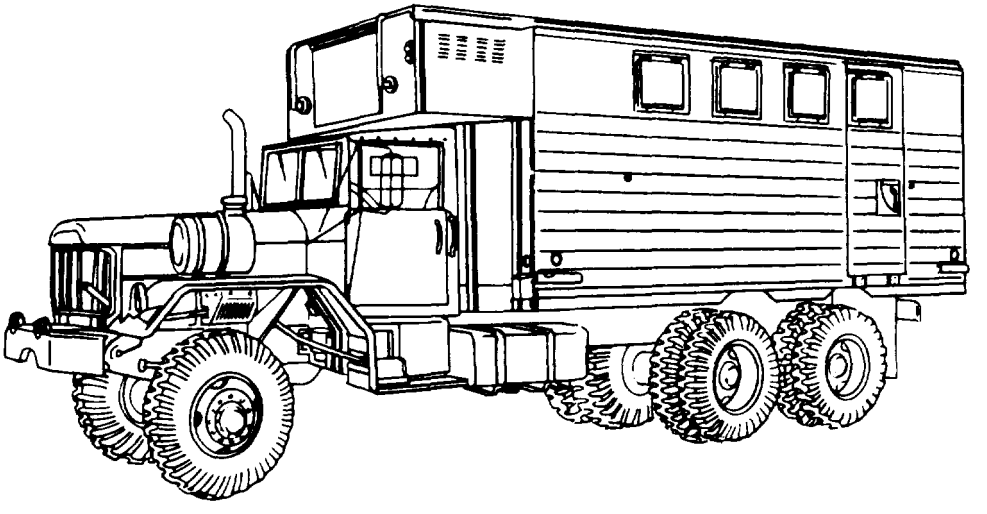

EXPANSIBLE VAN TRUCK (M820)
(LEFT FRONT VIEW)

TA 094203

## 1-16. EXPANSIBLE VAN TRUCK WO/W: M820, M820A1, AND M820A2 (Cont'd)

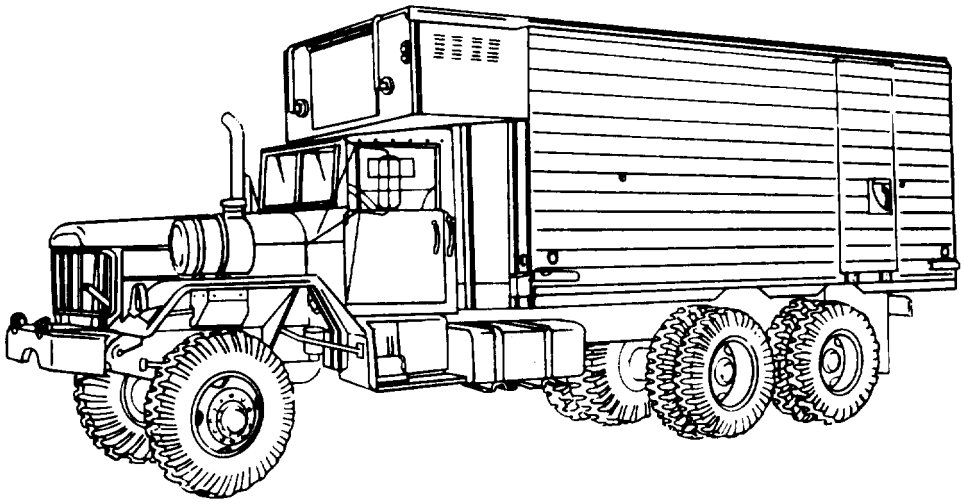

EXPANSIBLE VAN TRUCK (M820A1)
(LEFT FRONT VIEW)

EXPANSIBLE VAN TRUCK W/HLG (M820A2)
(LEFT REAR VIEW)

TA 094204

## 1-17. BRIDGE TRANSPORTING STAKE TRUCK WO/W: M821

**a. Purpose of the Vehicle.** The M821 bridge transporting truck is a stake body type truck designed to carry bridge building materials and equipment such as the M4T6 float bridge or class 60 bridge sections. The truck stake racks can be removed when extra wide loads are to be carried.

**b. Performance.** The M821 bridge transporting truck has a 20 x 7 foot (6.1 x 2.14 meter) stake body for transporting bridge building equipment and other cargo. A rear roller can be used for easier loading and unloading. A snatch block at the front of the truck can also be used for easier loading and unloading. Two hand-operated winches on left side of body and two winches at rear of body are used to secure load to the truck. Vehicle turning radius is 47 feet, 8 inches (1,453 centimeters).

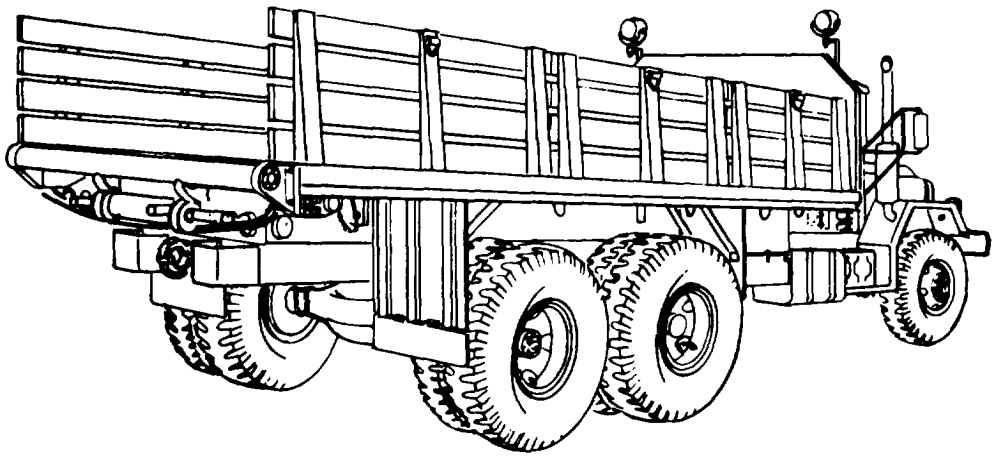

BRIDGE TRANSPORTING STAKE TRUCK (M821)
(RIGHT REAR VIEW)

TA 094205

## 1-18. Tabulated Data

This paragraph organizes vehicle specifications, special equipment, and model differences in table form for easy reference by operators.

**a. Dimensions.** See table 1-2.
**b. Weights.** See table 1-3.
**c. Tire Inflation Data.** See table 1-4.
**d. Capacities.** See table 1-5.
**e. Permissible Fuels.** See table 1-6.
**f. Chassis Dimensions.** See table 1-7.
**g. Engine and Cooling System Data.** See table 1-8.
**h. Performance Data.** See table 1-9.
**i. Maximum Road Speed.** See table 1-10.
**j. Engine Downshift RPM Data.** See table 1-11
**k. Crane Boom Length.** See table 1-12.
**l. Winch Data.** See table 1-13.

*Table 1-2. Dimensions.*

| Vehicle | Length Overall w/Winch | | Height Overall | | Height Minimum Reducible | | Width Overall | | Ground Clearance | |
|---|---|---|---|---|---|---|---|---|---|---|
| | in. | cm | in. | cm | in. | cm | in. | cm | in. | cm |
| M812A1 | 376 | 955 | 115 | 292 | 88 | 224 | 114 | 290 | 13.1 | 33.3 |
| M813 | (a) 319 | 810 | 117 | 296 | 85 | 216 | 98 | 249 | 10.5 | 26.7 |
| M813A1 | (a) 319 | 810 | 117 | 296 | 85 | 216 | 98 | 249 | 10.5 | 26.7 |
| M814 | (a) 395 | 1,003 | 117 | 296 | 85 | 216 | 98 | 249 | 10.5 | 26.7 |
| M815 | 317 | 805 | 118 | 300 | 85 | 216 | 98 | 249 | 10.5 | 26.7 |
| M816 | 356 | 904 | 112 | 284 | 108 | 274 | 98 | 249 | 10.5 | 26.7 |
| M817 | 289 | 734 | 112 | 284 | 85 | 216 | 98 | 249 | 10.5 | 26.7 |
| M818 | (c) 280 | 711 | 112 | 284 | 85 | 216 | 98 | 249 | 10.5 | 26.7 |
| M819 | 359 | 912 | 132 | 335 | 132 | 335 | 98 | 249 | 10.5 | 26.7 |
| M820 | (b) 363 | 923 | 138 | 351 | 138 | 251 | (d) 98 | 249 | 10.5 | 26.7 |
| M820A1 | (b) 363 | 923 | 138 | 351 | 138 | 251 | (d) 98 | 249 | 10.5 | 26.7 |
| M820A2 | (b) 376 | 955 | 138 | 351 | 138 | 251 | (d) 98 | 249 | 10.5 | 26.7 |
| M821 | (b) 392 | 970 | 114 | 290 | 111 | 282 | 114 | 290 | 13.1 | 33.3 |

(a) 15.5 in. (39.4 cm) shorter without front winch
(b) Without front winch
(c) 14 in. (35.6 cm) shorter without front winch
(d) 167 in. (424.2 cm) when expanded

TA 094206

### *Table 1-3. Weights.*

| Vehicle | Empty W/Winch | | (a) Max. Payload | | (a) Max. Towed Load | |
|---|---|---|---|---|---|---|
| | lb | kg | lb | kg | lb | kg |
| M812A1 | 20,810 | 9,448 | 16,000 | 7,264 | 15,000 | 6,810 |
| M813 | (b)21,020 | 9,543 | 10,000 | 4,540 | 15,000 | 6,810 |
| M813A1 | (b)21,120 | 9,588 | 10,000 | 4,540 | 15,000 | 6,810 |
| M814 | (b)23,540 | 10,687 | 10,000 | 4,540 | 15,000 | 6,810 |
| M815 | 21,040 | 9,652 | 10,000 | 4,540 | 15,000 | 6,810 |
| M816 | 35,050 | 15,913 | (c) 7,000 | 3,178 | 20,000 | 9,080 |
| M817 | (b)23,755 | 10,785 | 10,000 | 4,540 | 15,000 | 6,810 |
| M818 | (b)20,165 | 9,155 | 15,000 | 6,810 | (d)15,000 | 6,810 |
| | | | | | (e)37,500 | 17,025 |
| M819 | 35,065 | 15,920 | (c)12,000 | 5,448 | (d)15,000 | 6,810 |
| | | | | | (e)37,500 | 17,025 |
| M820 | (f)28,195 | 12,801 | 5,000 | 2,270 | 15,000 | 6,810 |
| M820A1 | (f)27,895 | 12,664 | 5,000 | 2,270 | 15,000 | 6,810 |
| M820A2 | (f)30,195 | 13,709 | 5,000 | 2,270 | 15,000 | 6,810 |
| M821 | (f)28,880 | 13,111 | 10,000 | 4,540 | 15,000 | 6,810 |

(a) Subtract 400 lbs (182 kg) for2 crewmembers
(b) 665 lb (302 kg) less without front winch.
(c) On crane w/boom shipperbraced and secured.
(d) Pintle load allowance.
(e) Semitrailergross tongue weight, including rated fifth wheel load allowance.
(f) Without front winch.

### *Table 1-4. Tire Inflation Data.*

| Vehicle Type (Tire Size) | PRESSURE RATING | | | | | | | |
|---|---|---|---|---|---|---|---|---|
| | FRONT | | | | REAR | | | |
| | Standard (psi) | | Metric (kPa) | | Standard (psi) | | Metric (kPa) | |
| | H | CC | H | CC | H | CC | H | CC |
| M812A1 (14:00x20) | 50 | 25 | 344 | 172 | 30 | 25 | 206 | 172 |
| M813, M813A1, M814, M15, M817, M818, M820, M820A1, M820A2 (11:00x20) | 80 | 60 | 551 | 413 | 50 | 30 | 344 | 206 |
| M816 (11:00x20) | 70 | 60 | 483 | 413 | 70 | 60 | 482 | 413 |
| M819 (12:00x20) - 16 ply (front) - 14 ply (rear) | 105 | 80 | 724 | 551 | 65 | 55 | 448 | 379 |
| M813 (14:00x20) - supersingle | 55 | 55 | 379 | 379 | 55 | 55 | 379 | 379 |
| M821 (14:00x20) | 50 | 40 | 344 | 276 | 30 | 25 | 206 | 172 |
| All models: Mud, sand, and snow | 25 | 25 | 172 | 172 | 25 | 25 | 172 | 172 |
| Spare tire | * | * | * | * | * | * | * | * |

*Maximum highway inflation
H: Highway CC: Cross-country

### *Table 1-5. Capacities.*

| Description | Capacity | | Vehicle(s) |
|---|---|---|---|
| | Standard | Metric | |
| Cooling system wo/heaterkit | 32 qt | 30 l | All |
| Cooling system w/heaterkit | 42 qt | 40 l | All |
| Crankcase wo/filterchange | 23 qt | 22 l | All |
| Crane hydraulic oil tank | *60 gal. | 227 l | M816 |
| | *33 gal. | 125 l | M819 |
| Differentials (each) | 12 qt | 11 l | All |
| Dump body hydraulic system | 37 qt | 35 l | M817 |
| Fuel tank(s): | | | |
| Single tank | †78 gal. | 295 l | M812A1, M813, M813A1, M814, M815, M819, M820, M820A1, M820A2, M821 |
| Dual tanks | †133 gal. | 503 l | M816 |
| Dual tanks | †110 gal. | 416 l | M817, M818 |
| Liftgate hydraulic tank | 12 qt | 11 l | M820A2 |
| Steering system | 5 qt | 5 l | All |
| Transfercase | 5.25 qt | 5 l | All |
| Transmission wo/PTO | 9 qt | 8 l | All |
| transmission w/PTO | 11 qt | 10 l | All |
| Winch(es): | | | |
| Front | 2.6 pt | 1.2 l | All w/front winch |
| Midships | 2.6 pt | 1.2 l | M815 |
| Rear | 7.0 pt | 3.3 l | All w/rear winch |
| Front end frame | 1.75 pt | .8 l | All w/front winch |
| Midships end frame | 1.75 pt | .8 l | M815 |

* Approximate

† Normal cruising range: 350 mi (563 km) w/78 gal. (295 l) tank; 440 mi (708 km) w/110 gal. (416 l) tanks; 585 mi (941 km) w/133 gal. (503 l) tanks

### *Table 1-6. Permissible Fuels.*

| Temperature Limits | Fuel Requirements |
|---|---|
| Do not use below +32°F(0°C) | Grade DF2 fuel (of Spec VV-F-800) |
| Do not use below -10°F(-23°C) | Grade DF1 fuel (of Spec VV-F-800) |
| All temperatures | Grade DFA fuel (of Spec VV-F-800) |

*Table 1-7. Chassis Dimensions.*

| Vehicle Type | Wheelbase in. (cm) | Angle (Degrees) of Approach W/W | Angle (Degrees) of Approach WO/W | Angle (Degrees) of Departure | Turning Radius W/O Winch ft/in. (cm) | Turning Radius W/Winch ft/in. (cm) |
|---|---|---|---|---|---|---|
| M812A1 | 215 in. (546 cm) | 34 | — | 30 | — | 48 ft 7 in. (1,481 cm) |
| M813 | 179 in. (455 cm | 33 | 44 | 38 | 40 ft 7 in. (1,219 cm) | 42 ft 4 in. 1,290 cm) |
| M814 | 215 in. (546 cm) | 33 | 44 | 23.5 | 47 ft 2 in. (1,438 cm) | 48 ft 7 in. (1,481 cm) |
| M815 | 179 in. (455 cm) | 33 | — | 38 | — | 42 ft 4 in. (1,290 cm) |
| M816 | 179 in. (455 cm) | 35 | — | 38 | — | 42 ft 4 in. (1,290 cm) |
| M817 | 167 in. (424 cm) | 32 | 43 | 60 | 39 ft 2 in. (1,194 cm) | 40 ft 7 in. 1,219 cm) |
| M818 | 167 in. (424 cm) | 33 | 44 | 60 | 39 ft 2 in. (1,194 cm) | 40 ft 7 in. (1,219 cm) |
| M819 | 215 in. (546 cm) | 32 | — | 55 | — | 48 ft 7 in. (1,481 cm) |
| M820 | 215 in. (546 cm) | — | 43 | 24 | 47 ft 2 in. (1,438 cm) | — |
| M820A1 | 215 in. (546 cm) | — | 43 | 24 | 47 ft 2 in. (1,438 cm) | — |
| M820A2 | 215 in. (546 cm) | — | 43 | 24 | 47 ft 2 in. (1,438 cm) | — |
| M821 | 215 in. (546 cm) | — | 34 | 30 | — | 48 ft 7 in. (1,481 cm) |

*Table 1-8. Engine and Cooling System Data.*

| Attribute | Specification |
|---|---|
| Cylinders (in-line) | 6 |
| Brake horsepower | 240 (gross at 2100 rpm) |
| Ignition system | Compression |
| Firing order | 1-5-3-62-4 |
| Cooling: | Liquid |
| Capacity | 32 qt (30 l) |
| Thermostat: | |
| (a) Start to open | 175°F (79°C) |
| (b) Fully open | 195°F (91°C) |

*Table 1-9. Performance Data.*

| Model | Maximum Speed mph (km/h) | Maximum Grade Degrees | Cruising Range mi. (km) | Idle Speed rpm | Engine Operating Temperature |
|---|---|---|---|---|---|
| M812A1 | 60 (97) | 60+ | 350 (563) | 600-650 | 175° - 195°F |
| M812A1 (w/towed load) | 60 (97) | — | 300 (483) | 600-650 | 175° - 195°F |
| M813 | 52 (84) | 60+ | 350 (563) | 600-650 | 175° - 195°F |
| M813 (w/towed load) | 52 (84) | 55 | 300 (483) | 600-650 | 175° - 195°F |
| M813A1 | 52 (84) | 60+ | 350 (563) | 600-650 | 175° - 195°F |
| M813A1 (w/towed load) | 52 (84) | 55 | 300 (483) | 600-650 | 175° - 195°F |
| M814 | 52 (84) | 60+ | 350 (563) | 600-650 | 175° - 195°F |
| M814 (w/towed load) | 52 (84) | 52 | 300 (483) | 600-650 | 175° - 195°F |
| M815 | 52 (84) | 60+ | 350 (563) | 600-650 | 175° - 195°F |
| M815 (w/towed load) | 52 (84) | 55 | 300 (483) | 600-650 | 175° - 195°F |
| M816 | 52 (84) | 60+ | 585 (941) | 600-650 | 175° - 195°F |
| M816 (w/towed load) | 25 (40) | 46 | 400 (644) | 600-650 | 175° - 195°F |
| M817 | 52 (84) | 60+ | 440 (708) | 600-650 | 175° - 195°F |
| M817 (w/towed load) | 52 (84) | 52 | 400 (644) | 600-650 | 175° - 195°F |
| M818 | 52 (84) | 60+ | 440 (708) | 600-650 | 175° - 195°F |
| M818 (w/towed load) | 52 (84) | 46 | 300 (483) | 600-650 | 175° - 195°F |
| M819 | 52 (84) | 60+ | 350 (563) | 600-650 | 175° - 195°F |
| M819 (w/towed load) | 25 (40) | 33 | 300 (483) | 600-650 | 175° - 195°F |
| M820 | 52 (84) | 60+ | 350 (563) | 600-650 | 175° - 195°F |
| M820 (w/towed load) | 52 (84) | 53 | 300 (483) | 600-650 | 175° - 195°F |
| M820A1 | 52 (84) | 60+ | 350 (563) | 600-650 | 175° - 195°F |
| M820A1 (w/towed load) | 52 (84) | 53 | 300 (483) | 600-650 | 175° - 195°F |
| M820A2 | 52 (84) | 60+ | 350 (563) | 600-650 | 175° - 195°F |
| M820A2 (w/towed load) | 52 (84) | 52 | 300 (483) | 600-650 | 175° - 195°F |
| M821 | 60 (97) | 60+ | 350 (563) | 600-650 | 175° - 195°F |
| M821 (w/towed load) | 60 (97) | 43 | 300 (483) | 600-650 | 175° - 195°F |

*Table 1-10. Maximum Road Speed.*

| TRANSMISSION IN: | TRANSFER IN: | | | |
|---|---|---|---|---|
| | *Low | | High | |
| | mph | (km/h) | mph | (km/h) |
| 1st gear | 3 | ( 5 ) | 7 | (11) |
| 2nd gear | 6 | (10) | 12 | (19) |
| 3rd gear | 11 | (18) | 23 | (37) |
| 4th gear | 20 | (32) | 40 | (64) |
| 5th gear | 25 | (40) | 52 | (84) |
| Reverse gear | 3 | ( 5 ) | 11 | (18) |

*Do not shift transfer into low when vehicle speed is overlow range figures.

**NOTE**

Do not allow engine speed to exceed 2,100 rpm in any transmission gear ratio. Referto table 1-11 for recommended engine downshifting RPM data.

*Table 1-11. Engine Downshift RPM Data.*

| Transmission Downshift | Maximum Engine RPM |
|---|---|
| 5 to 4 | 1600 |
| 4 to 3 | 1100 |
| 3 to 2 | 1100 |
| 2 to 1 | 1100 |

*Table 1-12. Crane Boom Length.*

| Crane (Wrecker) | Boom Length (See caution) |
|---|---|
| M816 | 10 ft to 18 ft (305 cm to 549 cm) |
| M819 | 11 ft 6 in to 26 ft (351 cm to 792 cm) |
| **CAUTION** Observe safe load data plate weight limits when extending boom. | |

*Table 1-13. Winch Data.*

| Winch | Capacity lbs (kg) | Cable Length ft/in. (cm) |
|---|---|---|
| Front winch(all M809 series trucks except M816 and M819) | 20,000 lbs (9,080 kg) | 200 ft (6,096 cm) |
| Front winch(M816 and M819) | 20,000 lbs (9,080 kg) | 280 ft (8,534 cm) |
| Midships winch (M815 only) | 20,000 lbs (9,080 kg) | 300 ft (9,144 cm) |
| Rearwinch (M816 only) | 45,000 lbs (2,043 kg) | 350 ft (10,668 cm) |
| **NOTE** When using winch to recoverequipment that exceeds winch rated capacity, referto FM 20-22 forrigging preparation and determing proper mechanical advantage. | | |

# Section III. TECHNICAL PRINCIPLES OF OPERATION

## 1-19. GENERAL

**a.** This section explains how systems and components of the 5-ton, M809 series vehicles work together. A function description of these systems and components and their related parts is covered as follows:

**NOTE**

Except where specifically noted, these systems and components are generally applicable to all vehicles covered in this manual.

**b.** Refer to applicable paragraphs of this manual for detailed operating instructions for these systems and their components.

**(1) Electrical System Operation:** Paragraph 1-20. This paragraph describes how electrical power is supplied to the components that control the vehicle and provide vehicle lighting.

**(2) Compressed Air System Operation:** Paragraph 1-21. This paragraph describes how filtered air is compressed and supplied to the components that slow down and stop the vehicle, as well as the air-actuated accessories through the vehicle.

**(3) Service Brake System Operation:** Paragraph 1-22. This paragraph describes how the air-hydraulic system provides mechanical power to the vehicle brake components to slow or stop the vehicle.

## 1-20. Electrical System Operation

The electrical system is a 24-volt dc system. Four 12-volt storage batteries are connected with the negative terminal grounded. The engine starter motor operates directly from the 24-volt source. The system uses a belt-driven, 24-volt alternator having an output capacity of 60 amperes. A battery generator indicator is found on the instrument panel. Wiring harnesses are used to carry current to operate equipment and accessories. Circuit breakers are included to protect circuits from overload.

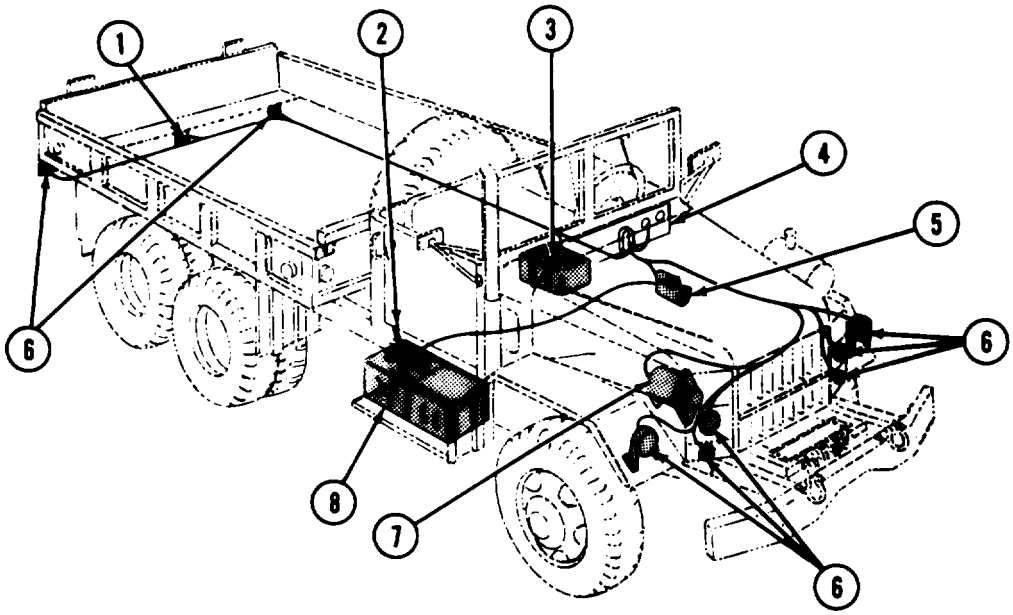


| Key | Item | Key | Item |
|---|---|---|---|
| 1 | Trailer electrical coupling | 5 | Starter motor |
| 2 | Battery ground strap | 6 | Lights |
| 3 | Fuel level sending unit | 7 | Alternator/regulator |
| 4 | Driver's controls and indicators (in cab) | 8 | Batteries |

TA 094213

## 1-21. Compressed Air System Operation

The compressed air system consists of an air compressor, air governor and air reservoirs, and the trailer airbrake components. The compressed air system supplies air to the air-hydraulic brake cylinder, windshield wiper motors, horn, and air supply valves. Air from the supply valves can be used to inflate the tires. When air pressure in the air reservoir tanks is low, a buzzer is set off in the driver's compartment to warn the driver.

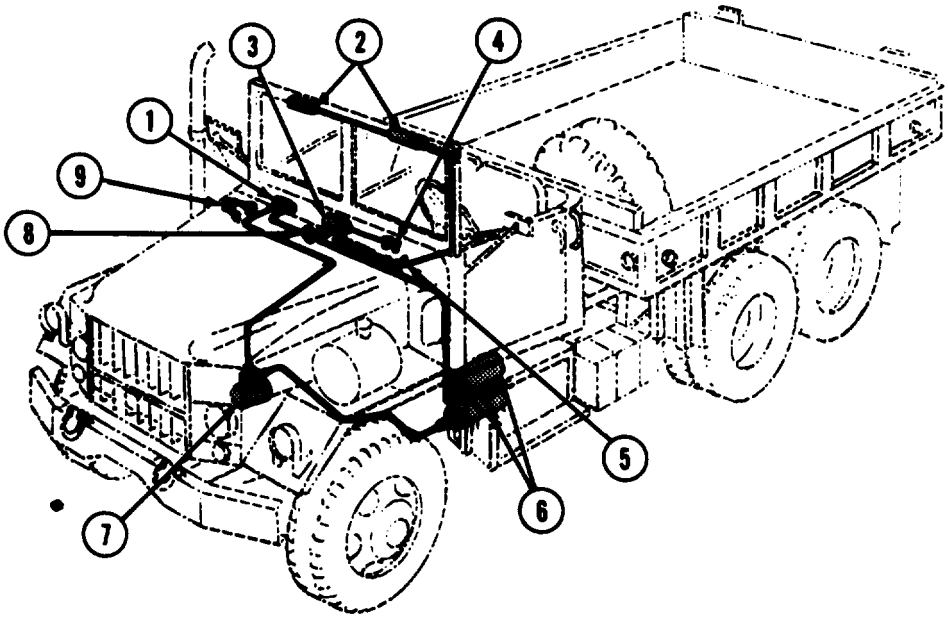


| Key | Item | Key | Item |
|---|---|---|---|
| 1 | Air governor | 6 | Air reservoirs |
| 2 | Windshield wiper motors (in cab) | 7 | Air compressor (on engine) |
| 3 | Compressed air manifold | 8 | Air pressure gage (in cab) |
| 4 | Air supply valve (in cab) | 9 | Horn |
| 5 | Windshield wiper control (in cab) | | |

TA 094214

## 1-22. Service Brake System Operation

The service brake system is an air-hydraulic system made up of the foot brake pedal, pedal linkage, master cylinder, air-hydraulic brake cylinder, hydraulic lines to all wheels, wheel cylinders, braked rums, and shoes. The master cylinder contains hydraulic fluid. Pressure on the brake pedal is sent to the air-hydraulic cylinder. The air-hydraulic cylinder increases pressure to the wheel cylinders. The wheel cylinders expand and press the brakeshoes against the drum to slow or stop the vehicle.

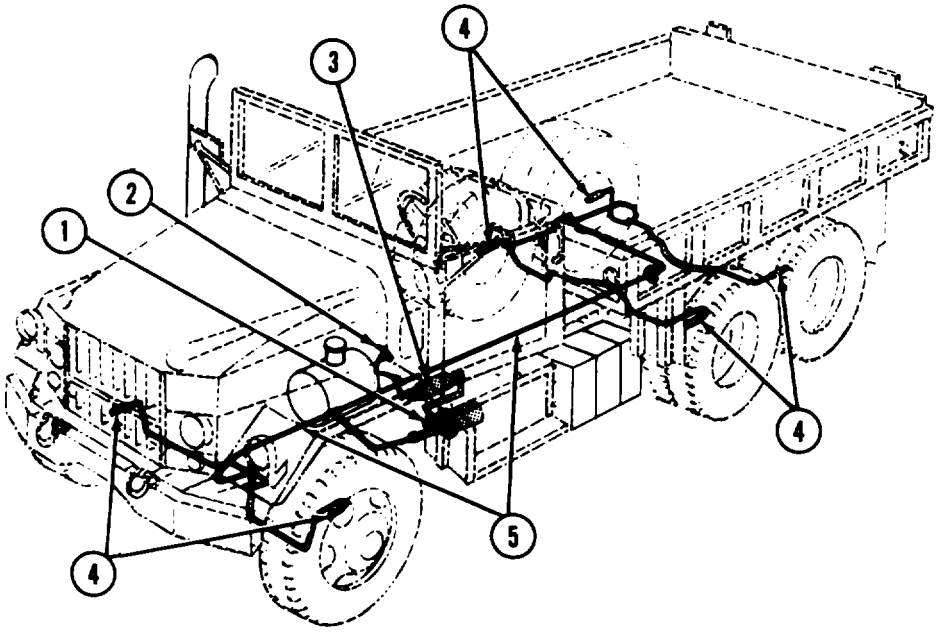


| Key | Item |
|---|---|
| 1 | Air-hydraulic brake cylinder |
| 2 | Foot brake pedal (in cab) |
| 3 | Master cylinder |
| 4 | Wheel cylinder |
| 5 | Hydraulic lines |

TA 094215

# CHAPTER 2
# OPERATING INSTRUCTIONS

## Section I. CONTROLS AND INDICATORS

### 2-1. GENERAL

This section contains a general description of chassis and body controls and indicators. Information about their location and function on the vehicle is also provided. Special purpose kits controls and indicators are included in this section.

### 2-2. KNOW YOUR CONTROLS AND INDICATORS

Before you attempt to operate your equipment, be sure you are familiar with the location and function of all controls and indicators. The location/function of your controls and indicators is described in this section as follows:

**a. Chassis Controls and Indicators:** paragraph 2-4.
**b. Body Equipment Controls and Indicators:** paragraph 2-5.
**c. Special Purpose Kits Controls and Indicators:** paragraph 2-6.

**NOTE**

- Except where specifically noted, the controls and indicators in this section are generally applicable to all vehicles covered in this manual.
- In this manual, the term “left” indicates the driver side of the vehicle. The term “right” indicates the opposite, or crew side of the vehicle.

### 2-3. PREPARATION FOR USE

When a vehicle is first received by the using organization, it is the responsibility of the officer-in-charge to determine if it has been properly prepared for service by the supplier. It is also the responsibility of the officer-in-charge to be sure the vehicle is in condition to perform its functions. Organizational maintenance will provide any additional service required to bring the vehicle to operating standards. Whenever practical, the operator will assist with this service

## 2-4. CHASSIS CONTROLS AND INDICATORS

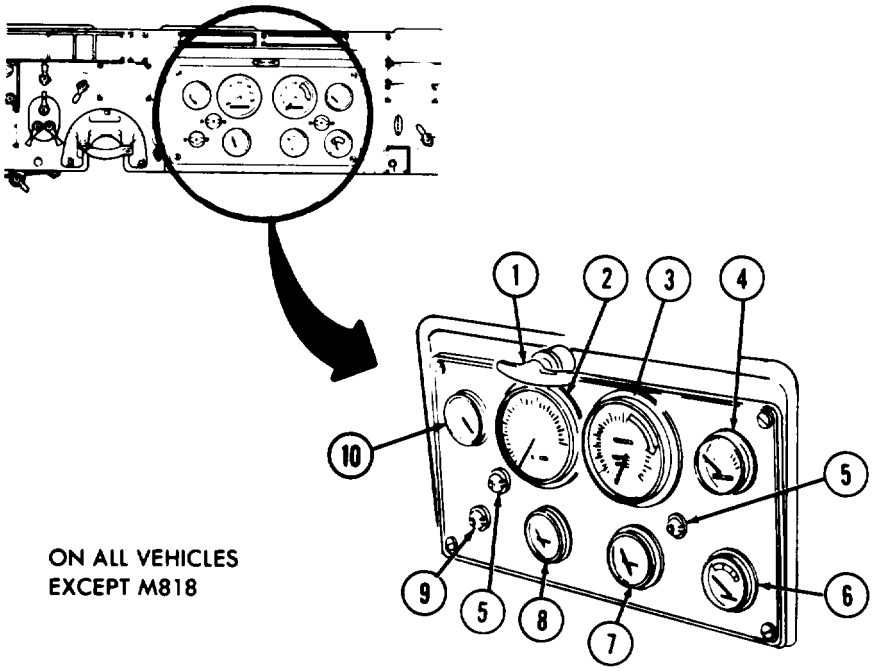


| KEY | ITEM AND FUNCTION |
|---|---|
| 1 | **Emergency engine stop control** stops flow of fuel from fuel pump to shut down engine during emergency. |
| 2 | **Speedometer/odometer** indicates vehicle speed and total mileage. |
| 3 | **Tachometer and engine hours indicator.** Tachometer shows engine speed (rpm). Engine hours indicator records and shows total hours engine has run. |
| 4 | **Temperature gage** indicates engine coolant temperature. |
| 5 | **Instrument panel lamps** illuminate when main light switch is placed in ON position and auxiliary switch is in panel bright or dim position. |
| 6 | **Battery-generator indicator** shows condition of battery. A green reading is normal, |
| 7 | **Air pressure gage** indicates compressed air system pressure. |
| 8 | **Engine oil pressure gage** indicates oil pressure when engine is running. |

TA 094217

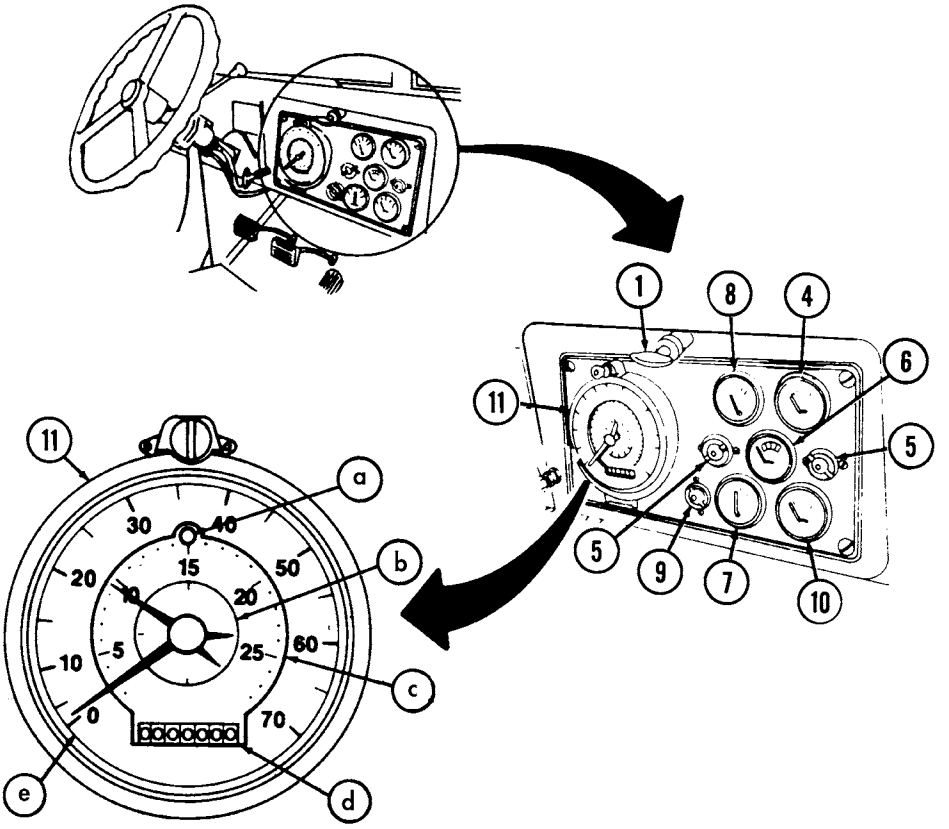


9 **High beam indicator lamp** illuminates when high beam selector switch is in high beam position.

10 **Fuel gage** indicates fuel level in fuel tank(s).

11 **Tachograph** (M818)

**(a) Warning lamp** illuminates when engine speed is 2300 rpm or more.

**(b) Inner scale** is a clock indicating time of day.

**(c) Middle scale** shows engine speed from 0 to 2800 rpm.

**(d) Odometer** indicates total mileage truck has traveled

**(e) Outer scale** indicates vehicle road speed from 0 to 70 mph (0 to 113 km).

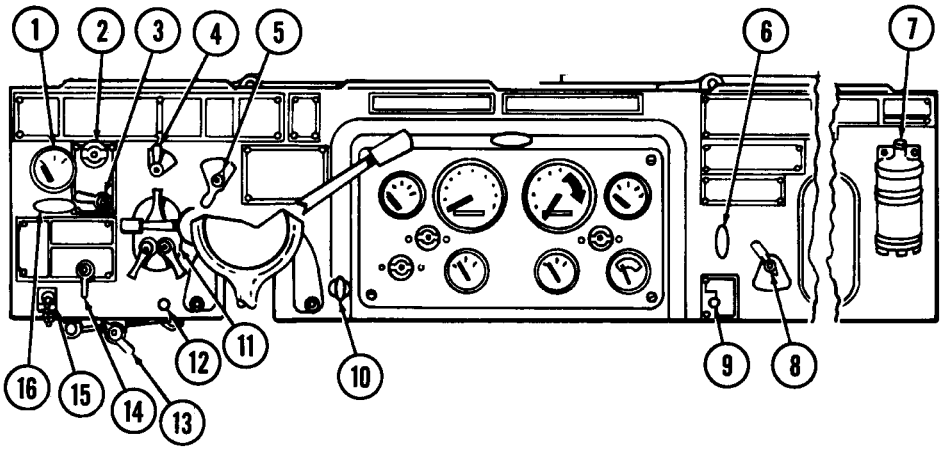


| KEY | ITEM AND FUNCTION |
|---|---|
| 1 | **Primer pressure gage** indicates pressure delivered by hand primer pump during cold weather starting and used when purging fuel system of air. |
| 2 | **Preheater indicator lamp** lights when preheater switch is placed in ON position. |
| 3 | **Preheater switch,** when set to START position, sends electrical power to engine preheater (used for cold weather starting). |
| 4 | **Battery switch** activates or deactivates all electrical circuits except horns, lights, manifold heaters, and arctic heaters. |
| 5 | **Fuel gage switch (M817 and M818)** when in “L” position, fuel gage shows left tank fuel level. When in “R” position, fuel gage shows right tank fuel level. |
| 6 | **Fording valve control handle** closes crankcase ventilating system during fording operations when pulled out. Opens engine crankcase ventilating system during normal operations when pushed in (kit only). |
| 7 | **Aircleaner filterindicator** when engine air cleaner filter needs cleaning, red band rises and locks to top of indicator window. |
| 8 | **Floodlight control switch (M816, M819, and M821),** when turned to ON position, provides electrical power to floodlight switches. When turned to OFF position, cuts electrical power to floodlight switches. |
| 9 | **Electric brake lock switch (M816, M819, M812, and M821)** locks vehicle service brakes in hold position. |

10 **Primer pump control,** when pushed in and pulled out, builds fuel pressure to engine preheater. Use when purging fuel system of air.

11 **Light switch** is used to turn vehicle service and blackout lights on and off.

12 **Windshield wiper control** activates wipers and controls windshield wiper speed.

13 **Fuel tank selector switch (M816)** directs supply of fuel from left or right fuel tanks.

14 **Ignition switch has OFF, RUN, and START positions.** Switch automatically returns from START to RUN when hand pressure is released,

15 **Electrical receptacle outlet (M816, M819, and M821)** used as an electrical receptacle for trouble light extension cord.

16 **Throttle control** sets engine speed at desired rpm without maintaining pressure on foot pedal. Throttle control locks in desired position when pulled out. Rotating control handle clockwise or counterclockwise unlocks it.

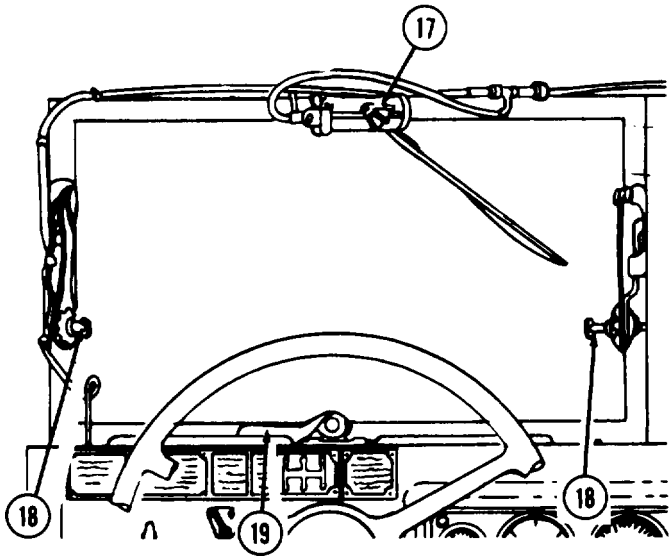


17 **Windshield wiper levers** are used to operate windshield wipers manually.

18 **Windshield clamping screws,** when turned to right, will lock windshield adjustable arms in position.

19 **Windshield locking handle,** in down position, locks windshield shut.

TA 094220

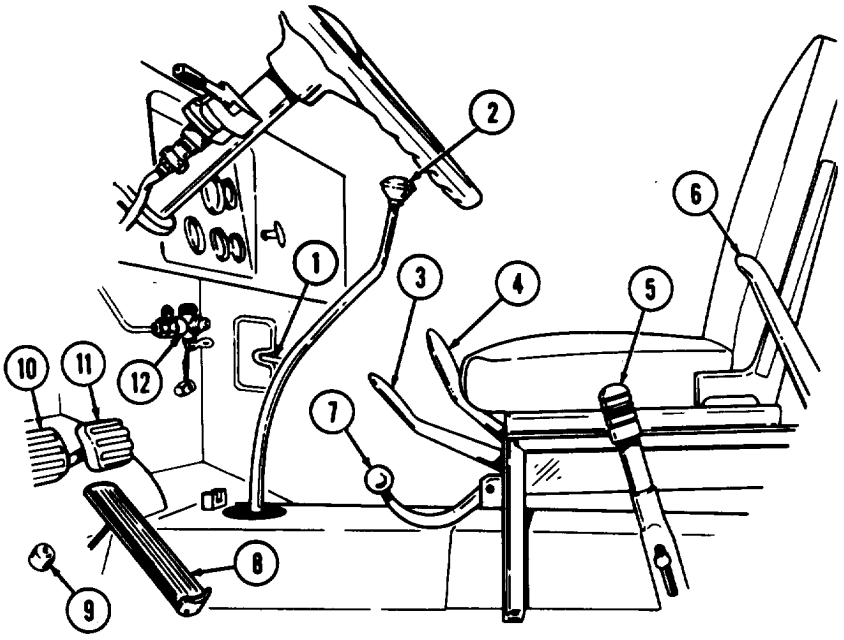


| KEY | ITEM AND FUNCTION |
|---|---|
| 1 | **Cowl ventilator control handle,** when pushed forward, opens cowl ventilator to . let air into cab; when pulled back, closes cowl ventilator. |
| 2 | **Transmission gearshift lever** is used to place transmission in 1 through 5 drive positions, reverse. or neutral, |
| 3 | **Transfer selector lever** is used to change gears. Lever is pulled up to "High" for light load conditions. down for "Low" and heavy load conditions. |
| 4 | **Front winch control lever** is pulled back to wind front winch and pushed forward to unwind. |
| 5 | **Parking brake control lever** is pulled up to apply parking brake. Knob at end of handle can be turned to adjust brake cable tension. |
| 6 | **Power divider control lever** is pushed forward to provide power for auxiliary equipment. |
| 7 | **Transfer power takeoff control lever** is pulled up to provide power for auxiliary equipment (M816). |
| 8 | **Accelerator pedal** controls engine speed. When pushed down with foot, engine speed increases. When foot pressure is released. engine speed is reduced. |
| 9 | **Headlight beam selector switch** is depressed to select "high" or "low" headlight beam. |

TA 094221

10 Clutch pedal is depressed to disengage engine from transmission and allows shifting to a different gear ratio. When clutch pedal is released, engine engages transmission.

11 Service brake pedal is depressed to slow or stop vehicle,

12 Air supply valve provides an auxiliary compressed air connection. Valve handle is turned left to open and turned right to close.

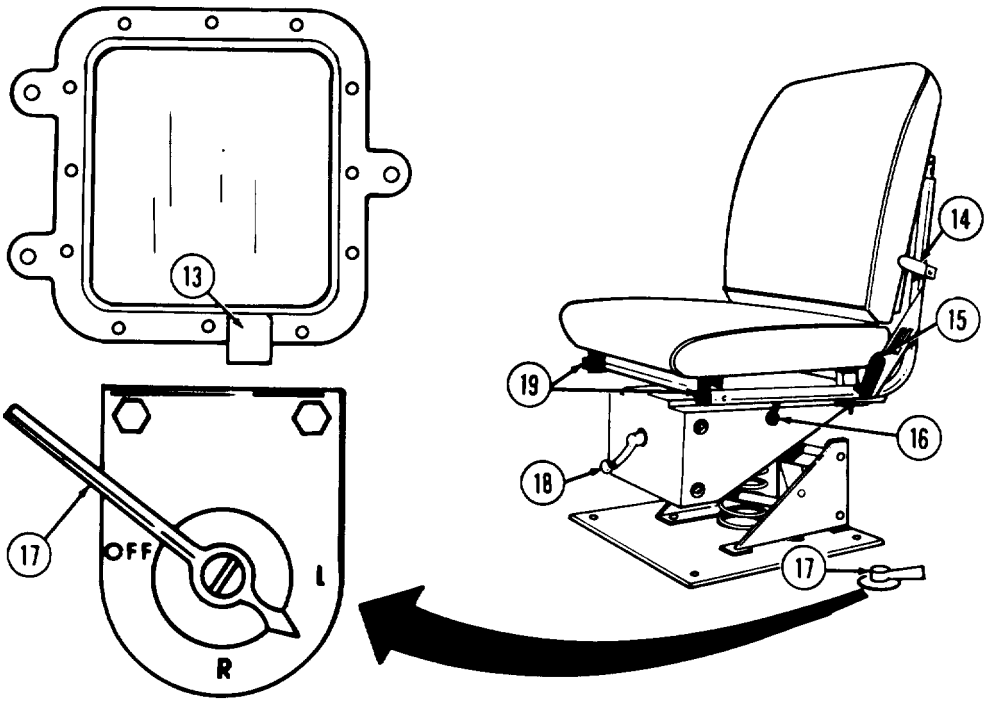


13 Warning buzzer is located in vehicle cab on top firewall. The unit buzzes when air system pressure drops below 60 psi (413.7 kPa).

14 Backrest control lever is used to adjust driver's seat lower section of the backrest forward or backward.

15 Seat cushion control lever adjusts driver's seat height and angle of seat cushion.

16 Seat horizontal control lever is used to move driver's seat forward or backward.

17 Fuel tank selector valve (M816, M817, and M818), when in "L" position, engine draws fuel from left side tank; when in "R" position, engine draws fuel from right side tank. Selector is located on cab floor to left side of driver's seat.

18 Spring tension control lever increases seat spring tension when lever is turned clockwise.

19 Slotted brackets at each corner permit front portion of driver's seat to be raised or lowered.

TA 094222

| KEY | ITEM AND FUNCTION |
|---|---|
| 1 | Steering wheel is used to control direction of vehicle. |
| 2 | Horn button is pressed down to sound vehicle horn, |
| 3 | Airbrake control lever (M815, M818, and M819), when moved toward operator, activates trailer brakes; when moved away from operator, releases trailer brakes. |
| 4 | Turn signal control and hazard four-way flasher control. |
| | (a) When in left turn position, left side turn signal lamps will flash on and off. When in right turn position, right side turn signal lamps will flash on and off. |
| | (b) When in hazard warning position, all four turn signal lamps will flash on and off. |
| 5 | Holddown latch secures hood in opened position. |
| 6 | Support hook engages holddown latch (5) to secure opened hood. |
| 7 | Stowage clip secures support hook (6) when hood is down. |

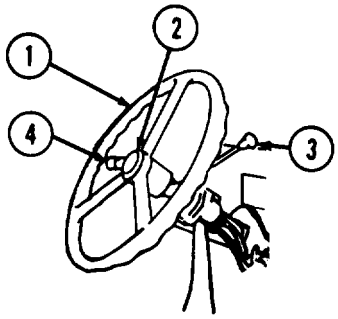


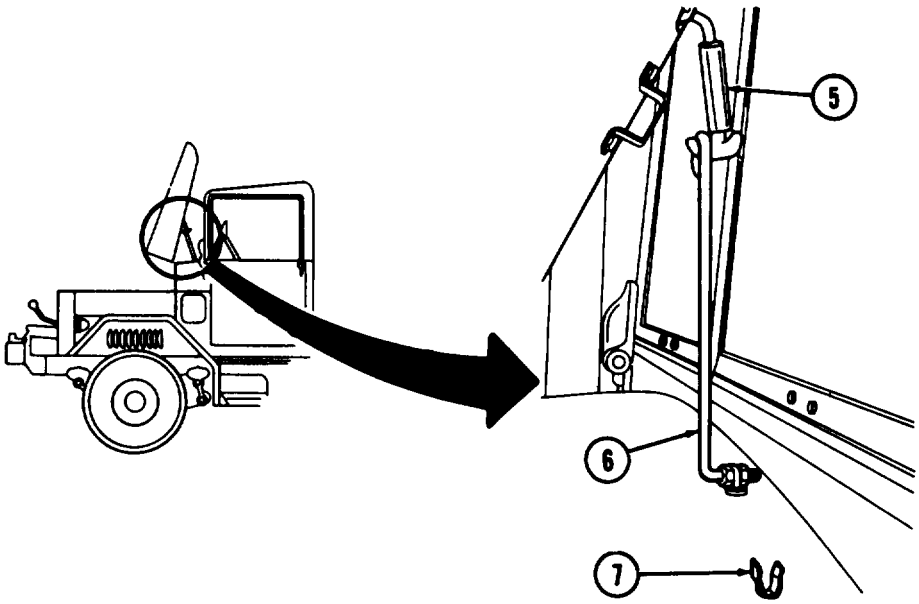


TA 094223

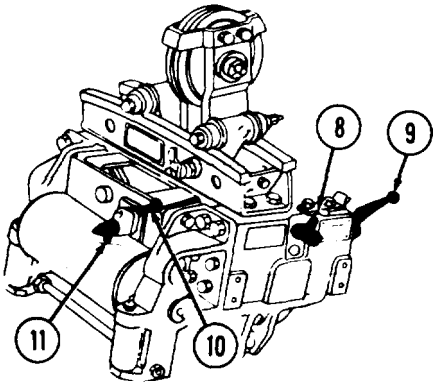


8 Front winch drum lock knob locks drum when winch is not in use.

9 Front winch control lever is pulled out to engage and pushed in to disengage winch clutch.

10 Tensioner lever is used to put tension on cable during rewind without a load.

11 Tensioner lever latch is used to lock the tensioner lever (10) in the released or free position.

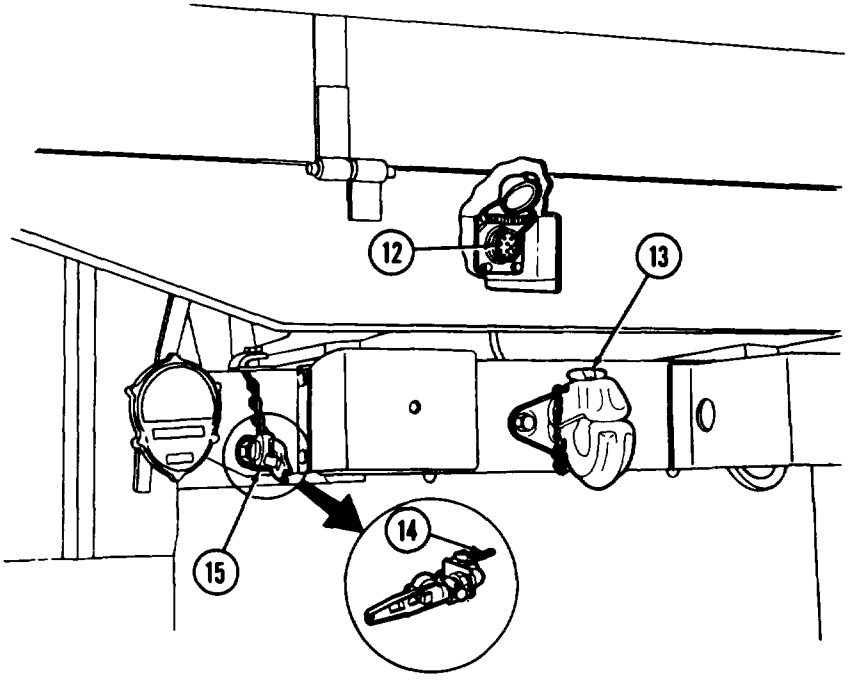


12 Trailer power outlet receptacle provides electric power for trailer when connected by cable.

13 Pintle hook attaches trailer to vehicle.

14 Air valve handles are turned to release compressed air to trailer brake system.

15 Trailer service air couplings are connected by hoses to the couplings of a trailer or vehicle being towed. This connection permits the operator to apply the brakes of the towed load when applying the brake pedal of the towing vehicle.

TA 094224

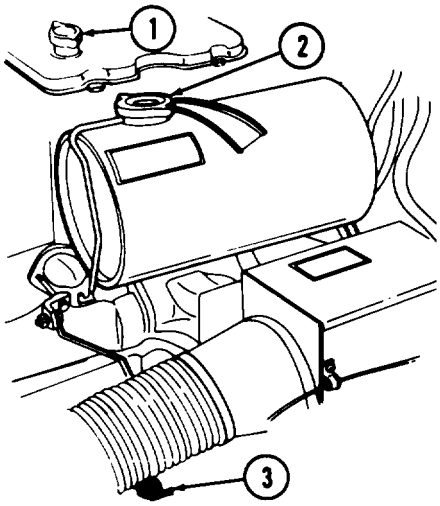


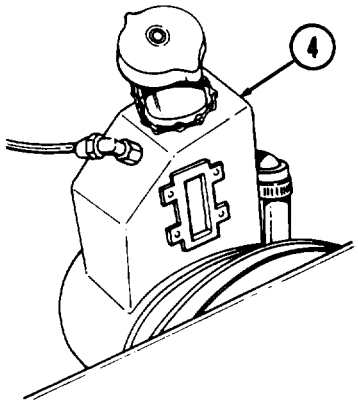


| KEY | ITEM AND FUNCTION |
|---|---|
| 1 | Oil filler cap is removed to add oil. |
| 2 | Coolant surge tank cap is removed to check coolant level and to add coolant. |
| 3 | Oil dipstick is unscrewed and removed to check oil level. |
| 4 | Hydraulic power steering reservoir oil level is checked with sight glass or dipstick in filler cap. Filler cap is removed to add oil. |
| 5 | Radiator draincock valve is turned counterclockwise to open and drain coolant from the radiator. |
| 6 | Side panel latches are turned in “up” position to release side panels. |
| 7 | Hood holddown latches are secured to hold hood in closed position. |
| 8 | Air reservoir draincock valve is turned counterclockwise to drain moisture from the air reservoirs. |

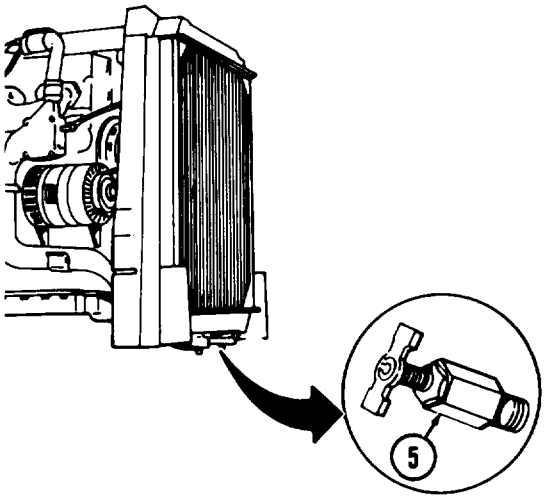


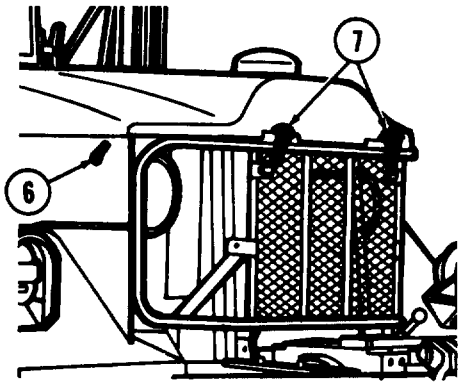


TA 094225

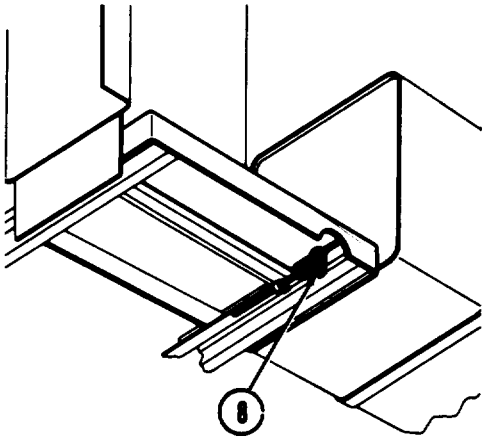


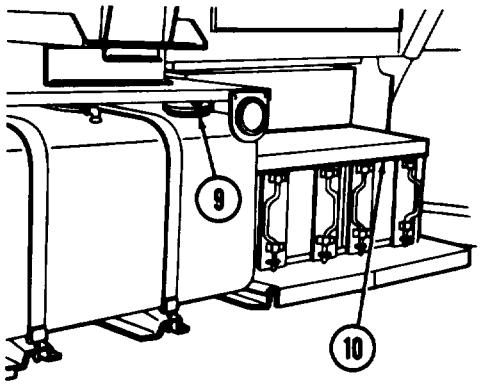


9 Fuel tank filler cap is turned counterclockwise to open for fuel servicing.

10 Battery compartment cover is removed to provide access to batteries.

11 Battery filler caps are removed to check battery fluid level.

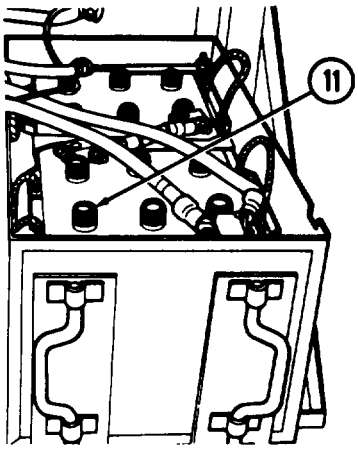


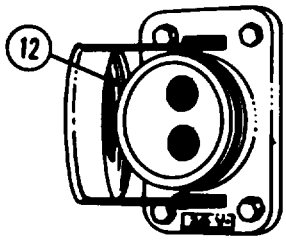


12 Slave receptacle, located on right rear side of cab, is the plug-in point used for an external power source to jump start the vehicle when the batteries have become discharged.

TA 094226

## 2-5. BODY EQUIPMENT CONTROLS AND INDICATORS

a. Bolster Logging Truck (M815).

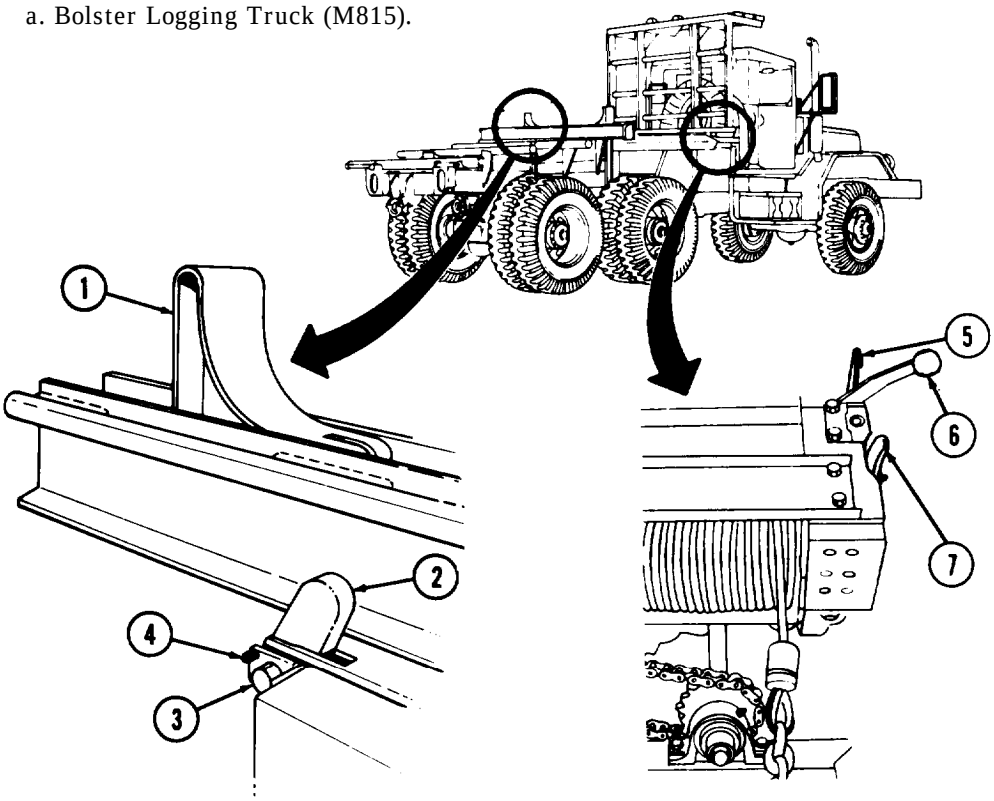


| KEY | ITEM AND FUNCTION |
|---|---|
| 1 | Bolster chocks must be centered to permit forward wheels of bolster trailer to contact chocks when trailer is loaded on to truck. |
| 2 | Bolster travel locks prevent bolster fifth wheel from turning and must be released when hauling logs. Travel locks are on the side of the bolster base frame. |
| 3 | Latch secures bolster travel locks. |
| 4 | Cotter pins are removed, lock pivoted down, and cotter pins replaced on both sides to release travel lock. |
| 5 | Drum clutch lever hinged lock is used to secure drum clutch lever (6) in disengage position. |
| 6 | Drum clutch lever is pulled out to engage and pushed in to disengage winch clutch. |
| 7 | Drum lock knob locks drum when winch is not in use. |

TA 094227

**a. Bolster Logging Truck (M815) (Cont'd).**

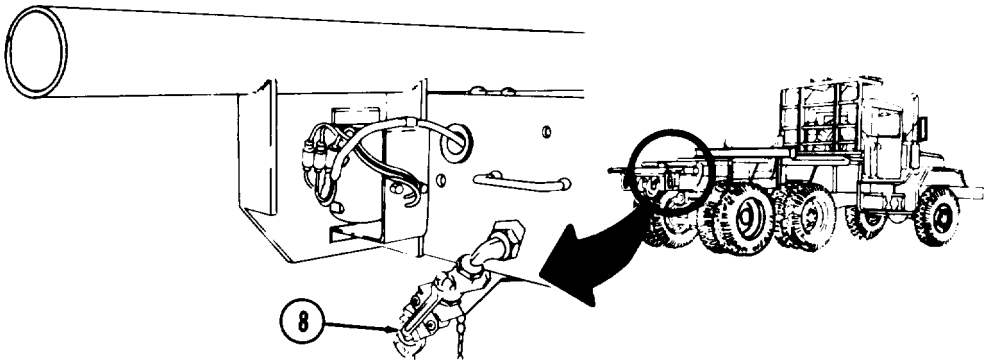


8 Air valve half couplings are used to connect air supply.

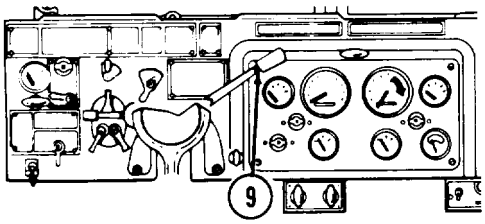


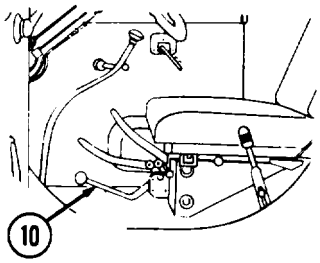


9 Airbrake hand control lever is used to control braking on a towed vehicle or semitrailer independently. When moved down, applies brakes; when moved up, releases brakes.

10 Transfer power takeoff control lever is used to power midships winch.

**b. Medium Wrecker (M816) and Tractor Wrecker (M819).**

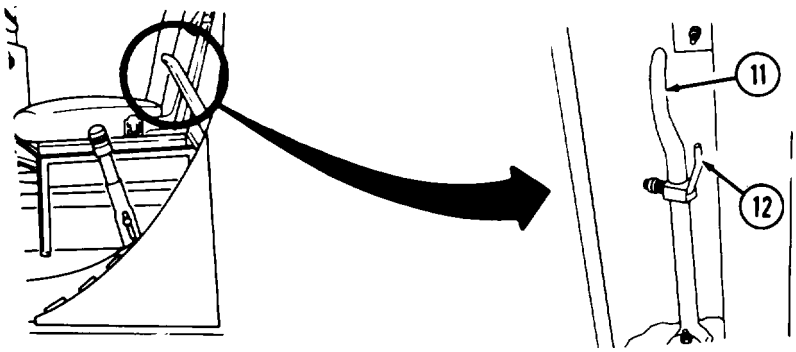


11 Power divider control lever is used to power hydraulic crane or rear winch.

12 Power divider control lever lock prevents power divider control lever from being placed in engaged position.

TA 094228

**b. Medium Wrecker (M816) and Tractor Wrecker (M819) (Cont'd).**

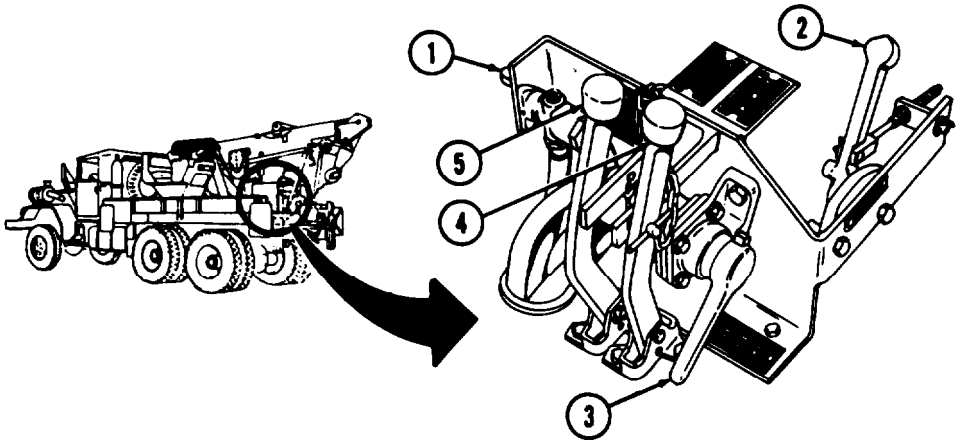


| KEY | ITEM AND FUNCTION |
|---|---|
| 1 | Cable tensioner control valve lever is used to engage cable tensioner (M816 only). |
| 2 | Throttle control lever is used to increase or decrease engine speed. |
| 3 | Engine clutch control lever is used to engage or disengage vehicle clutch and turn the winch drum. Engine clutch is engaged when lever is moved down, and disengaged when moved up (M816 only). |
| 4 | Rear winch shift lever is used to control turning of winch drum; move away from rear winch to unwind: move toward rear winch to wind: center position is neutral (M816 only). |
| 5 | Crane drive control lever is pulled back to operate crane after engine clutch control lever (3) is disengaged and power divider is engaged (M816 only). |

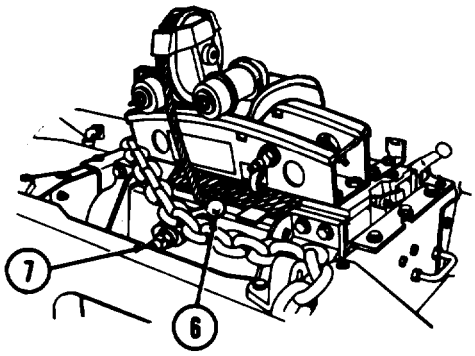


| | |
|---|---|
| 6 | Tensioner lever is used to put tension on cable during rewind without a load. |
| 7 | Tensioner lever latch is used to lock tensioner lever (6) in the released or free position. |

TA 094229

**b. Medium Wrecker (M816) and Tractor Wrecker (M819) (Cont'd).**

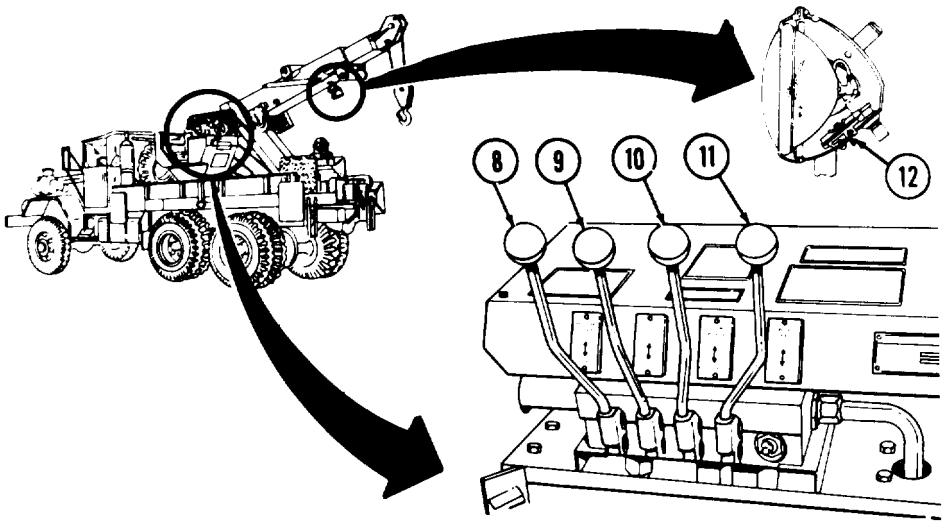


8 Boom control lever raises boom when pulled toward operator; lowers boom when moved away from operator.

9 Hoist control lever raises boom hook when pulled toward operator; lowers hook when moved away from operator.

10 Crowd control lever retracts boom when pulled toward operator; extends boom when moved away from operator.

11 Swing control lever swings crane assembly right when pulled toward operator; swings crane assembly left when moved away from operator.

12 Floodlight control switches are used to turn on each of three floodlights during night operations.

13 Floodlight control switch controls power to three floodlights. Turn clockwise for power ON, and counterclockwise for power OFF.

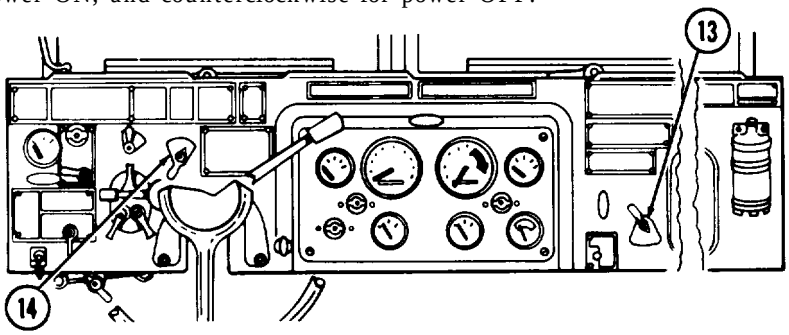


14 Signal light switch controls operation of amber warning light on left front fender when wrecker crane is operating or disabled vehicle is being towed.

TA 094230

**b. Medium Wrecker (M816) and Tractor Wrecker (M819) (Cont'd).**

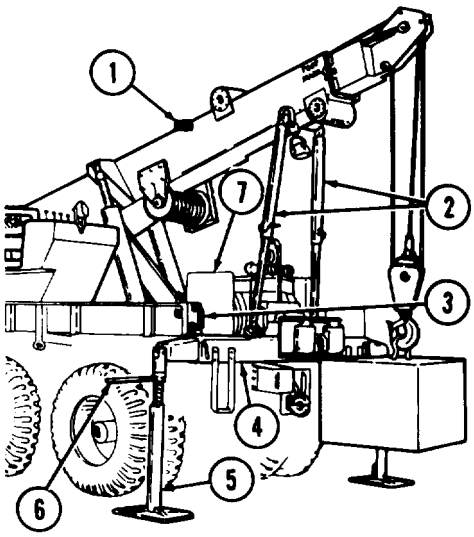


**KEY ITEM AND FUNCTION**

1 Shipper brace retaining bracket stores shipper brace assemblies (2) when not in use.

2 Shipper brace assemblies support shipper and boom during heavy rear lifts and cross-country operations,

3 Storage space for boom jacks (8) when not in use (M816 only).

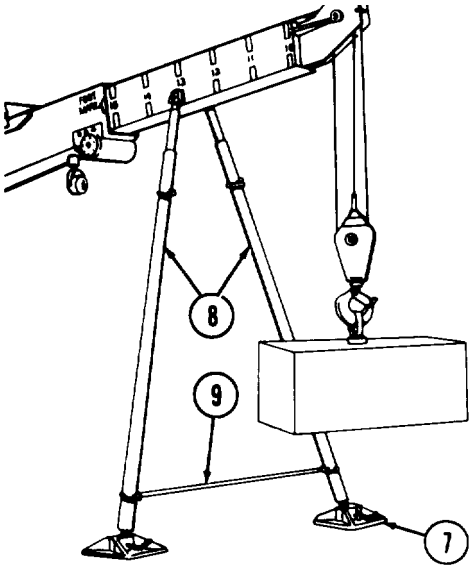


4 Frame tube provides storage for outriggers (5) when not in use.

5 Outriggers provide stabilization when handling heavy loads with crane.

6 Outrigger handles raise and lower outriggers (5).

7 Boom jack base plates are attached to boom jacks (8) when in use, and stored in this location when not in use (M816 only).

8 Boom jacks are extended as required for heavy rear or side lifts.

9 Tie bars add stability to boom jacks (8). Tie bars are secured by boom jack pins.

TA 094231

**b. Medium Wrecker (M816) and Tractor Wrecker (M819) (Cont'd)**

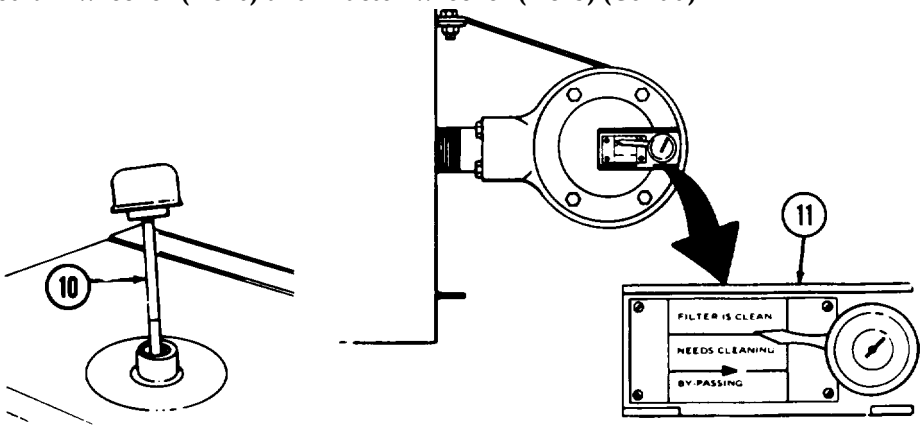


10 Dipstick on hydraulic crane oil reservoir measures oil level.

11 Filter indicator on front of hydraulic oil reservoir indicates if crane oil filter is clean or needs cleaning. Filter element must be changed when indicator is on NEEDS CLEANING.

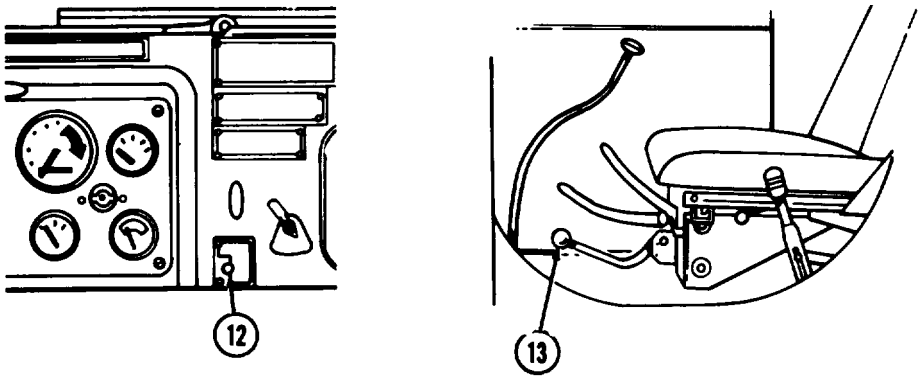


12 Electric brake lock switch locks vehicle service brakes in hold position when wrecker crane is in use.

13 Transfer power takeoff control lever, when pulled up, supplies drive power to hydraulic pump to operate crane controls. When pushed down, cuts power to crane controls (M816 and M819).

14 Wheel chocks are intended for use during parking in hilly areas and for blocking disabled vehicles while undergoing maintenance. Refer to FM 21-305.

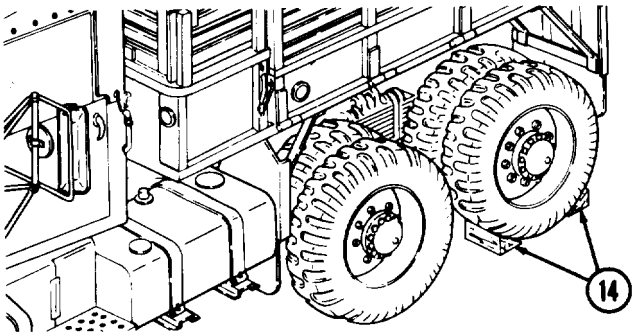


TA 094232

**b. Medium Wrecker (M816) and Tractor Wrecker (M819) (Cont'd).**

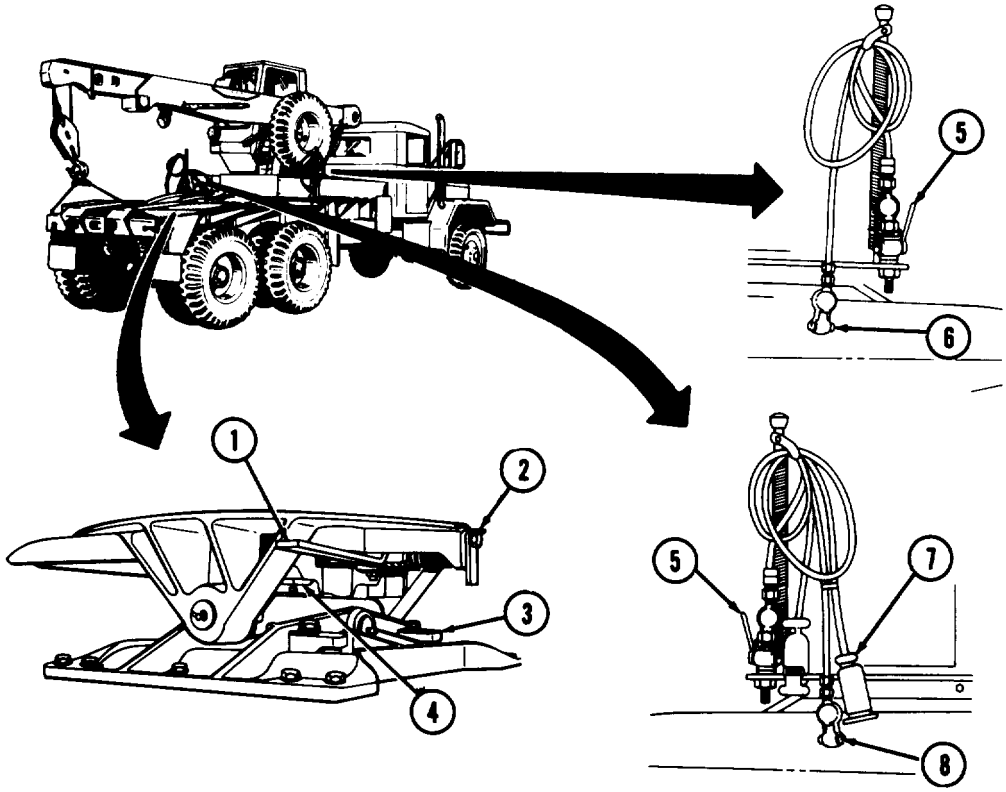


| KEY | ITEM AND FUNCTION |
|---|---|
| 1 | Fifth wheel locking plunger lever, when pulled forward, unlocks coupling jaws (4) to allow separation of trailer from tractor (M819 only). |
| 2 | Locking plunger safety latch is swung to one side to release locking plunger lever (1)(M819 only). |
| 3 | Fifth wheel wedges are moved toward rear of tractor for highway travel, and toward front for cross-country operations (M819 only). |
| 4 | Coupling jaws lock trailer king pin into tractor fifth wheel (M819 only). |
| 5 | Airbrake hose coupling valve handles, when turned to ON position, connects trailer brakes to truck brakes. In OFF position, disconnects trailer brakes from truck brakes (M819 only). |
| 6 | Service airbrake hose line is connected to the service airbrake coupling on the trailer to provide air to the trailer service airbrake system (M819 only). |
| 7 | Electrical cable is connected to the semitrailer electrical receptacle to provide electrical power to the semitrailer (M819 only). |
| 8 | Emergency airbrake hose line is connected to the emergency airbrake coupling on the trailer. The trailer emergency brake system is activated when the primary air system fails (M819 only). |

TA 094233

**c. Dump Truck (M817).**

| KEY | ITEM AND FUNCTION |
|---|---|
| 9 | Dump body control lever raises dump body when in power up (a) position. lowers dump body when in power down (b) position, (neutral is position (c)). Lever should be in locked position (d) when hoist is not being operated. |
| 10 | Dump control lever lock prevents dump body control lever from being used to raise or lower dump body. To unlock, move spring-loaded lock up as far as it will go. To lock, move down as far as it will go. |

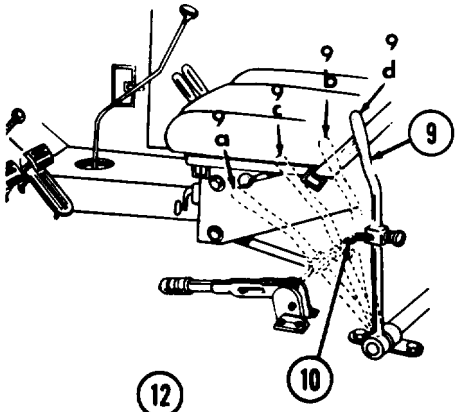


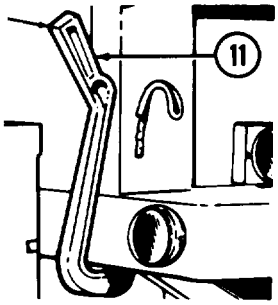


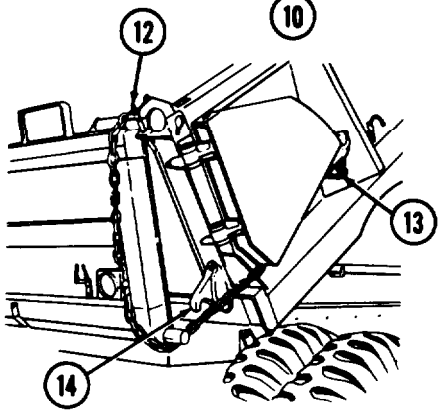


11 Tailgate control rod is used to unlock tailgate latches (14) when pulled forward and down; locks tailgate when pushed up and back.

12 Retaining pins secure tailgate upper hinge pins during standard dump operations. Pins are removed for rocker-type dump operations.

13 Wing harness hooks secure tailgate wings (16) to side of dump.

14 Tailgate latches unlock when tailgate control rod (11) is pulled back. Latches lock tailgate when control rod (11) is pushed forward.

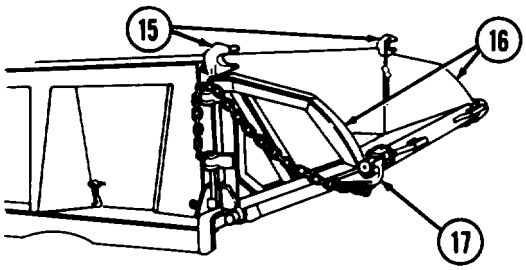


15 Upper hinges brackets house upper hinge pins by means of retaining pin (12).

16 Tailgate wings swing to rear of dump body for rocker-type dump operations.

17 Tailgate wing brackets house upper hinge pins for rocker-type dump operations.

TA 094234

**d. Bridge Stake Truck (M821).**

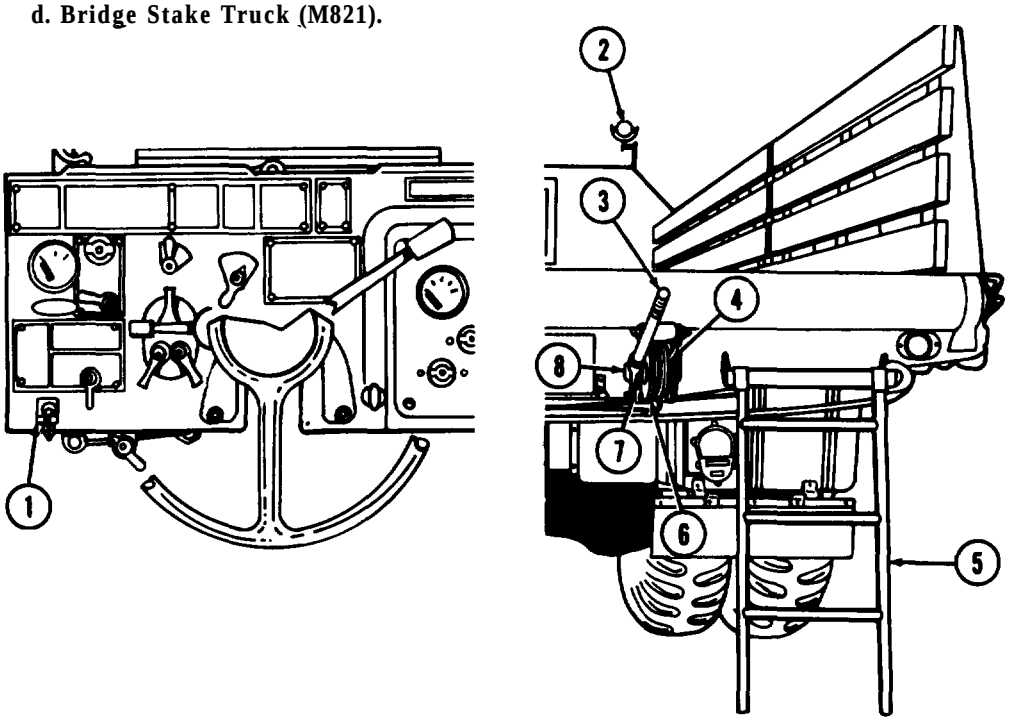


| KEY | ITEM AND FUNCTION |
|---|---|
| 1 | Electrical receptacle outlet used as an electrical receptacle for trouble light extension cord. |
| 2 | Floodlights on bulkhead have individual control switches. |
| 3 | Handle is installed in winch ratchet lever (8) and moved down to wind cable (4) on winch drum. |
| 4 | Winch cable is wound on drum using handle (3) in ratchet lever (8). |
| 5 | Ladder attached to rear of truck is used for personnel entry. |
| 6 | Ratchet wheel prevents winch cable (4) from unwinding. |
| 7 | Ratchet pawl locks ratchet wheel (6) in lock position. |
| 8 | Winch ratchet lever is pushed forward and down to unwind cable from drum. |

TA 094235

**e. Expansible Van (M820, M820A1, M820A2).**

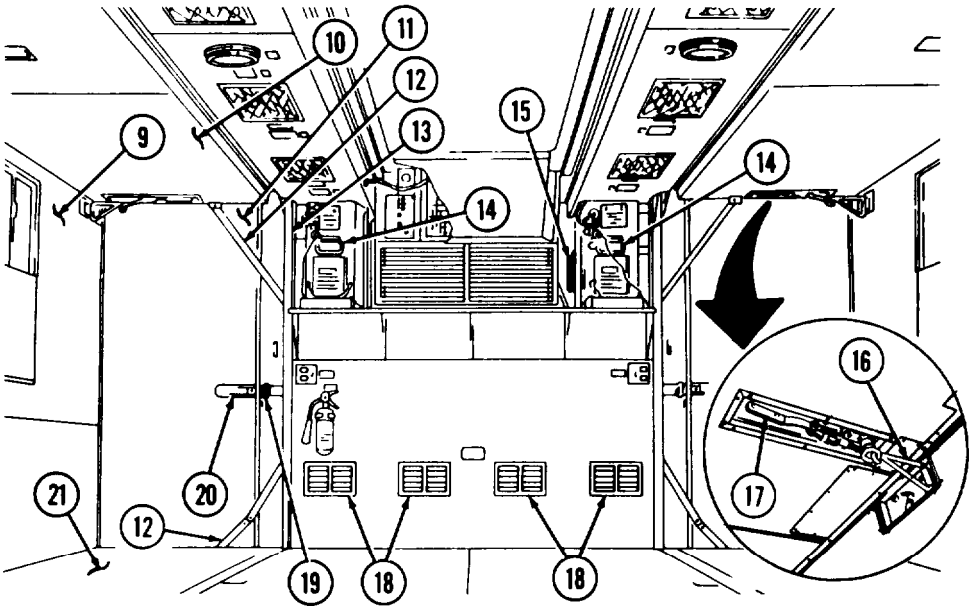


| KEY | ITEM AND FUNCTION |
|---|---|
| 9 | Expanded van side is secured to hinged roof panel (10) by swivel hooks (16) and toggle clamps ( 17). |
| 10 | Hinged roof panel is secured in extended position by swivel hooks (16) and toggle clamps (17). |
| 11 | End panel is hinged to van side (9) and secured to corner post (13) by sliding bolt (20). |
| 12 | Balance mechanism evenly controls lowering and raising of hinged floor (21) and roof panel ( 10). |
| 13 | Corner post supports balance mechanism (12) for expanded van sides (9). |
| 14 | Heaters in front of van provide heat. |
| 15 | Bonnet door control handle is pushed forward to open bonnet door before operating air conditioner. Handle is pulled back to close bonnet door after air conditioning unit has been shut off. |
| 16 | Swivel hooks are swung sideways to support hinged roof panel (10) when van sides (9) are expanded. |
| 17 | Toggle clamp locks with swivel hook (16) to secure hinged roof panel ( 10) to van side (9). |
| 18 | Heat registers are in use when van heaters ( 14) are operating. Registers must be closed when van heaters (14) are not in use. |
| 19 | Latch on van corner post (13) holds sliding bolt (20) in correct position. |
| 20 | Sliding bolt alines end panel (11) with van corner post (13). |
| 21 | Floor is hinged for up and down movement. |

TA 094236

1. **Expansible Van (M820, M820A 1, M820A2) (Cont 'd).**

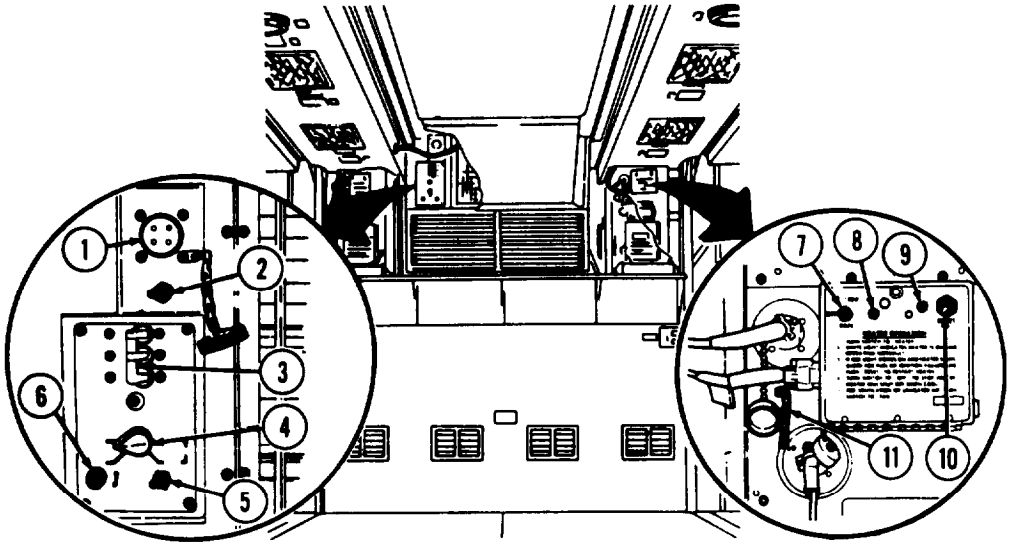


| KEY | ITEM AND FUNCTION |
|---|---|
| 1 | Power input receptacle is connected by cable to outside power source to provide electric power. |
| 2 | Circuit breaker must be in ON position before use of air conditioner (M820 and M820A2). |
| 3 | Compressor circuit breaker shuts air conditioner off automatically if electrical or other malfunction develops in air conditioner. Circuit breaker (2) must be manually reset to ON position after malfunction has been corrected (M820 and M820A2). |
| 4 | Air conditioner control regulates air circulation. COOLER position circulates cool air. VENT position circulates outside air into the van body (M820 and M820A2). |
| 5 | Fan speed control provides high and low fan speed operation for air circulation. |
| 6 | Temperature selector lever provides cool temperatures when in COOLER position. In WARMER position, air conditioner maintains 68° to 72° F (20° to 22° C) temperatures. Air conditioner shuts off when temperature selector knob is in OFF position (M820 and M820A2). |
| 7 | Heater switch provides heated air in HEATER position and unheated outside air in FAN position. Heater stops in OFF position. |
| 8 | White indicator light illuminates when heater is working properly. |
| 9 | Red indicator light illuminates when heater stops because of fuel or ignition malfunction. |
| 10 | Reset button is pressed to restart heater when fuel or ignition malfunctions have been corrected. |
| 11 | Handle controls mixture of outside and inside air when heater is operating. |

TA 094237

**e. Expansible Van (M820, M820A1, M820A2) (Cont'd).**

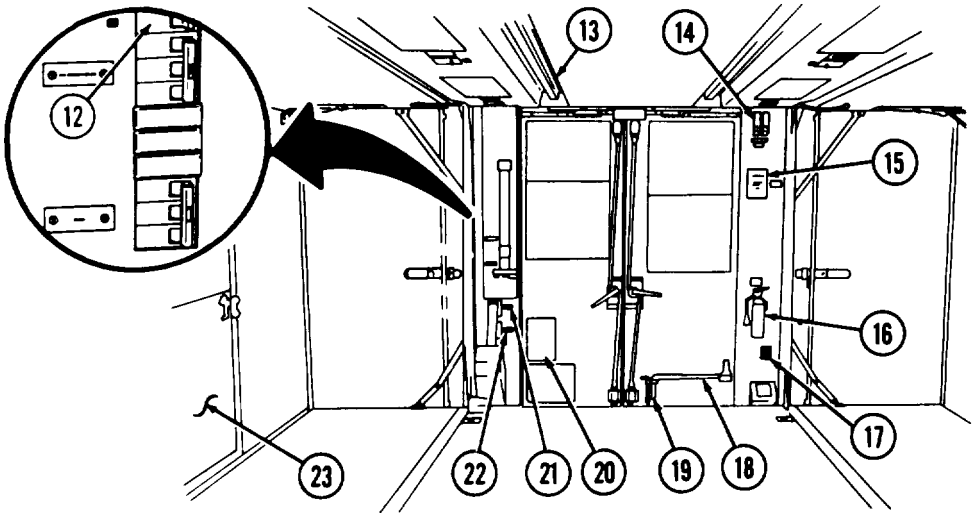


**NOTE**

An instruction plate near the circuit breaker panel lists circuits controlled by each switch.

12 Circuit breaker panel controls electric power received from outside source.

13 Air conditioner vent runs along entire length of ceiling and allows air to circulate (M820 and M820A2).

14 Heater thermostat regulates heater temperature.

15 Hydraulic Iiftgate auxiliary switch raises and lowers hydraulic Iiftgate when external power is in use (M820A2 only).

16 Fire extinguishers are mounted on van front and rear walls.

17 Telephone jack connects van telephone to outside lines.

18 Van body expanding and retracting wrench is used to expand and retract van body.

19 Side panel lock wrench is used to lock outer edges of van roof, corner posts, and end panels when van is expanded.

20 Plate contains instructions for operation of van.

21 Blackout main switch is turned on for blackout operations.

22 Emergency light switch is turned on when normal service lights fail.

23 Side doors are used by personnel when van is expanded.

TA 094238

**e. Expansible Van (M820, M820A1, M820A2) (Cont 'd).**

**KEY ITEM AND FUNCTION**

Window regulator opens window when turned clockwise, closes window when turned counterclockwise (M820A2).

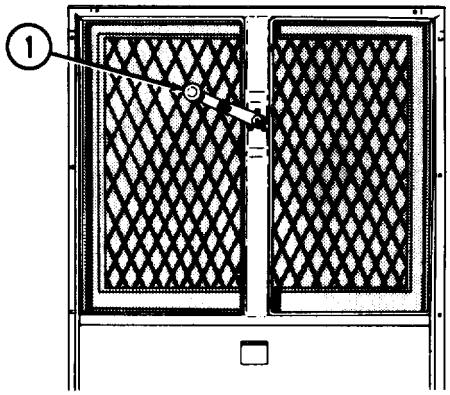


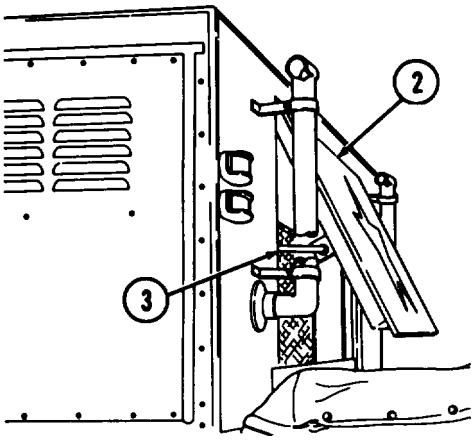


2 Bonnet door allows fresh air to enter air conditioner.

3 Rod opens bonnet door (2) when bonnet door control handle inside van is pushed forward. Rod pulls bonnet door (2) closed when control handle is pulled back.

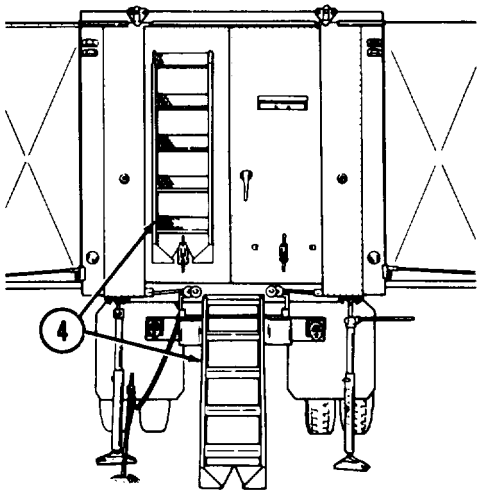


4 Ladders attached to rear door on M820 and M820A1 vans are used for entering or exiting van.

5 Side lockrods stabilize expanded van sides when attached to lock handles (15).

6 Hydraulic liftgate on M820A2 model is used to raise and lower equipment and has a capacity of 3,000 lbs (1,362 kg).

TA 094239

**e. Expansible Van (M820, M820A1, M820A2) (Cont'd.)**

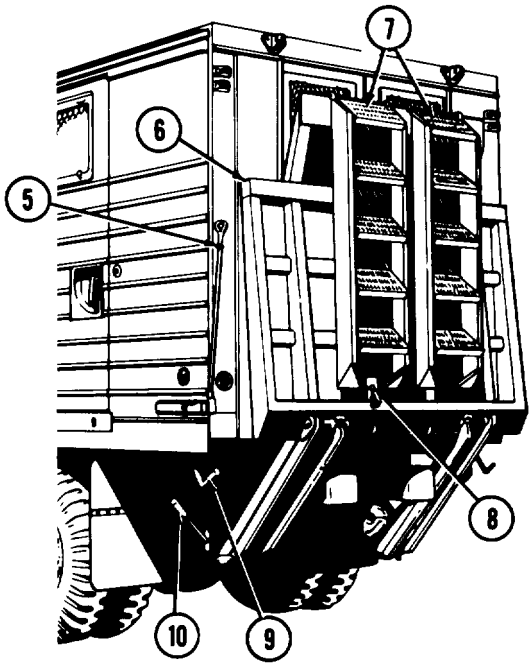


7 Ladders stored on liftgate (6) on M820A2 van are used for entering or exiting van.

8 Eyebolts and chains attached to underside of liftgate (6) secure bottom end of ladders (7) (M820A2 only).

9 Lowering/elevating control lever lowers and raises liftgate (6) (M820A2 only).

10 Opening/closing control lever opens and closes liftgate (6) (M820A2 only).

11 Lock wrench is turned counterclockwise to unlock expansible sides, hinged roof, and hinged floor, before expansion or retraction. Wrench is turned clockwise to lock these components after van is expanded or retracted.

12 **Door lock handle** is turned up to unlock and down to lock van doors.

13 **Ladder mounting brackets** secure ladders when ladders are in use.

14 **Canvas** covers power cable reel.

15 **Lock handles** engage side lockrods (5) when van is expanded to secure expanded sides to frame.

16 **Pin** secures lock handle (15) in closed position.

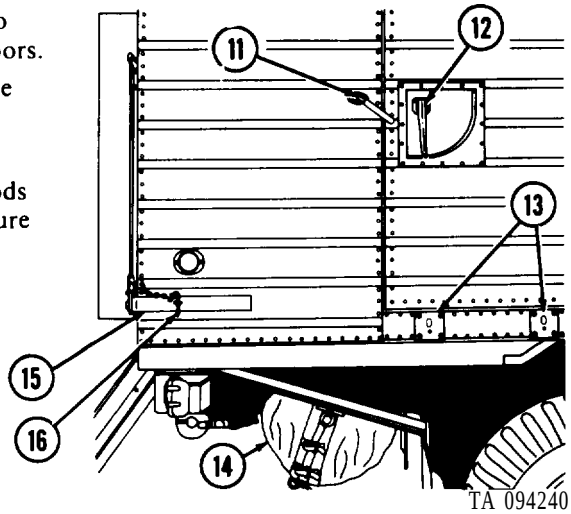

**e. Expansible Van (M820, M820A1, M820A2) (Cont'd).**

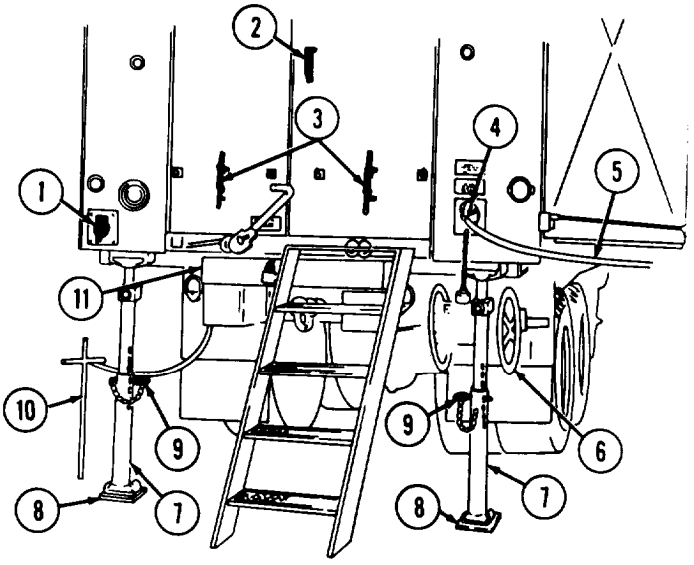


| KEY | ITEM AND FUNCTION |
|---|---|
| 1 | Phone jack receptacle receives outside communication lines. |
| 2 | Door handle is turned counterclockwise to open and clockwise to close rear van door. |
| 3 | Ladder clamps on M820 and M820A1 vans secure lower end of ladders. |
| 4 | Power receptacle provides electrical power to van from outside source. |
| 5 | Power cable connects van to outside power source. |
| 6 | Power cable reel stores power cable (5). |
| 7 | Stabilizers steady van when expanded. |
| 8 | Stabilizer footpads form base for stabilizers (7). |
| 9 | Chained pin inserts into stabilizer (7) holes to hold telescoped sections in place. |
| 10 | Ground spike provides electrical ground when external electric power is used. |
| 11 | Stowage compartment stores ground spike (10), tools, and stabilizers (7). |

TA 094241

e. **Expansible Van (M820, M820A1, M820A2) (Cont 'd).**

12 Locking plungers (located below left and right rear doors) are pushed downward to release ratchets (14) and pawls (15) before expanding or retracting sides. Plungers are pulled upward to lock van sides in expanded or retracted position.

13 Van body expanding and retracting wrench (stowed in bracket on inner part of rear door) fits over ratchets (14). Wrench is turned counterclockwise to expand left van side, clockwise to expand right van side.

14 Ratchet is turned by expanding and retracting wrench (13) to expand and retract van sides.

15 Pawl attached to locking plunger (12) locks ratchet (14), Pawl releases ratchet when locking plunger (12) is pushed downward.

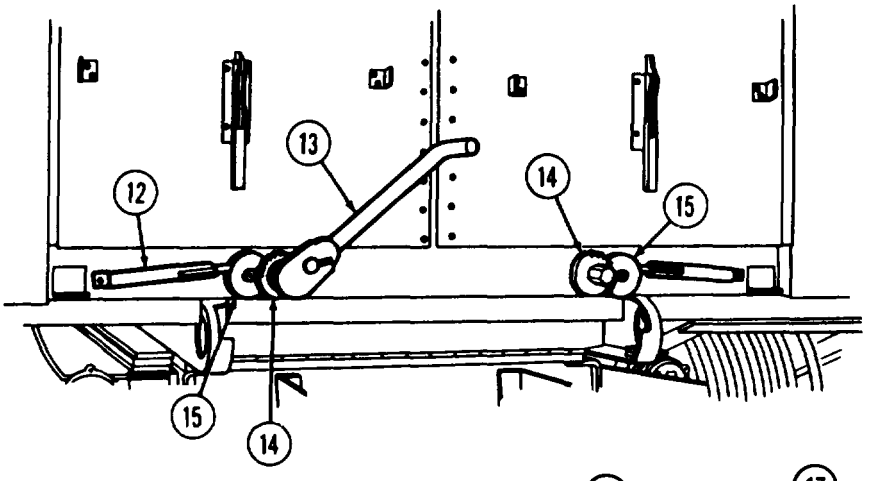


16 Lifting brackets on rear and front of van body allow lifting van body from chassis.

17 Ladder rack holds ladders on M820 and M820A1 vans.

18 Clearance and blackout lights are controlled from vehicle cab.

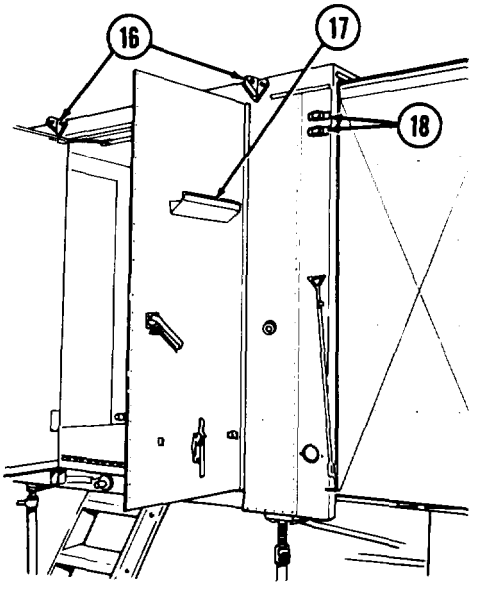


TA 094242

## 2-6. SPECIAL PURPOSE KITS CONTROLS AND INDICATORS

a. Airbrake Control Kit.

| KEY | ITEM AND FUNCTION |
|---|---|
| 1 | Airbrake hand control lever applies brakes on towed vehicle when pulled down: releases brakes when pushed up. |

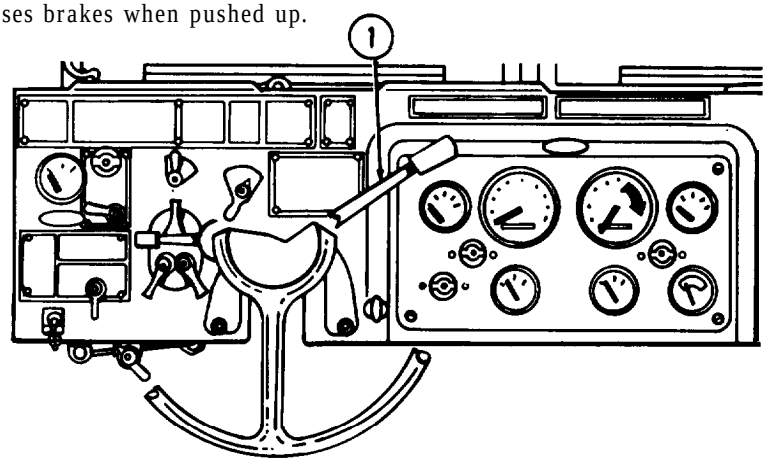


**a.1 Seat Belt Assembly Kit.**

1.1 Seat belt assembly is designed to restrain operator and personnel from being thrown from vehicle during head-on or rollover accidents.

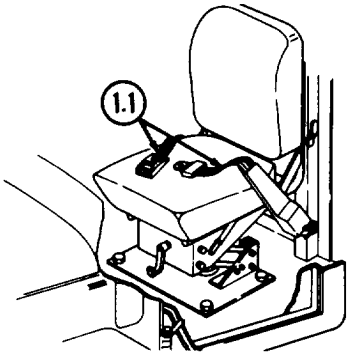


**b. Arctic Winterization Kit.**

2 Defroster control handle is pulled all the way out for maximum defroster operation; pushed in all the way for maximum heater operation; placed halfway out for combination heater/defroster operation.

3 Air control handle is pulled all the way out for maximum air flow; pushed in to decrease or shut off air flow.

4 Hi-lo switch controls the rate of fuel burning.

5 Red light illuminates when personnel heater is operating.

6 Start-off-run switch, when placed in START position, starts personnel heater; when placed in RUN position, heater is thermostatically controlled; when placed in OFF position, cuts off fuel supply to heater.

TA 094243

**b. Arctic Winterization Kit (Cont'd).**

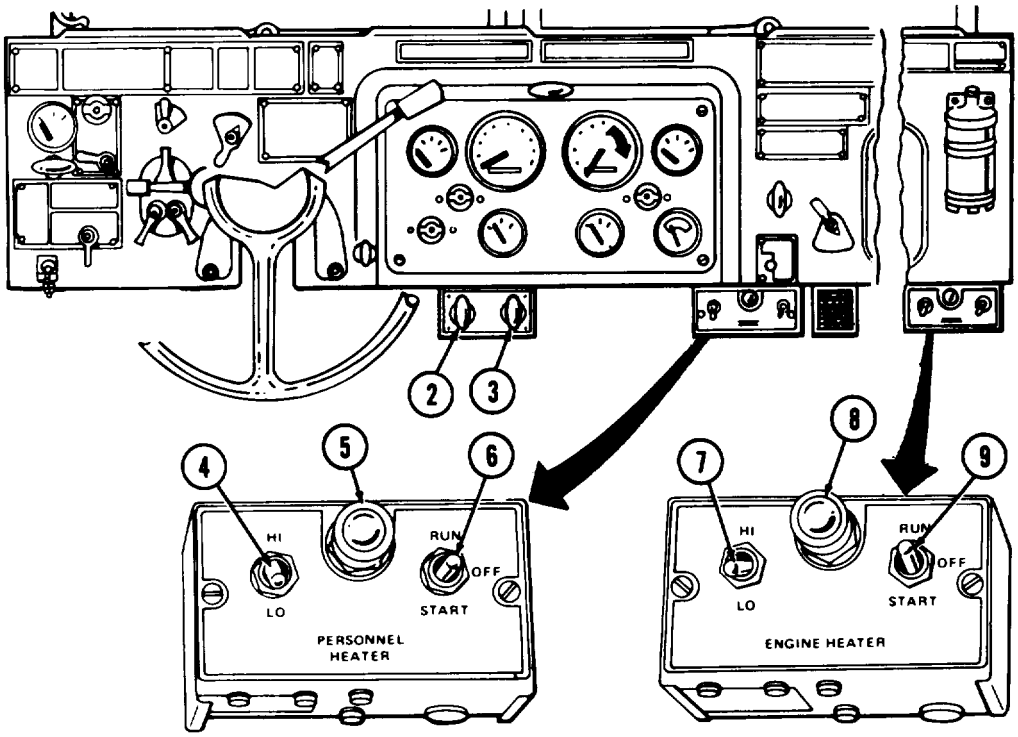


7 Hi-lo switch controls the rate of fuel burning.

8 Red indicator light illuminates when engine heater is operating.

9 Start-off-run switch, when placed in START position, starts engine heater; when placed in RUN position, heater is thermostatically controlled; when placed in OFF position, cuts off fuel supply to heater.

TA 094244

**b. Arctic Winterization Kit (Cont'd).**

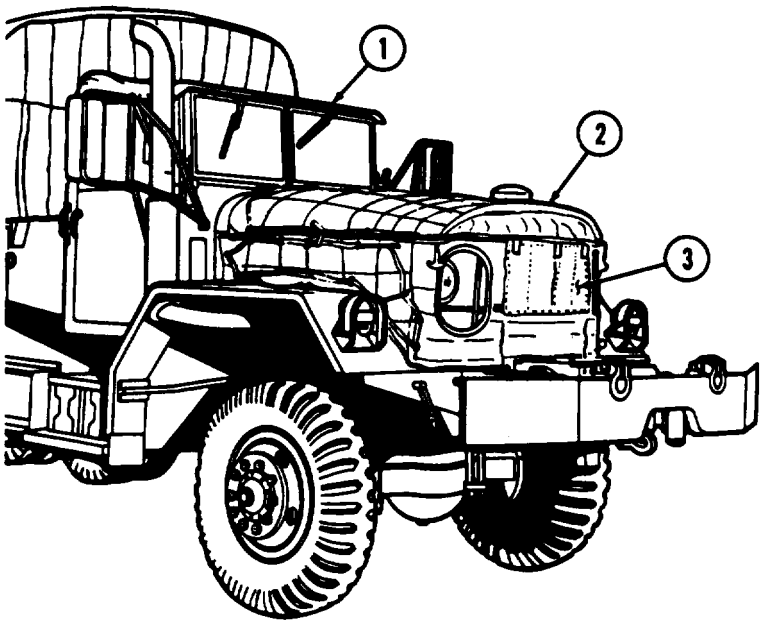


| KEY | ITEM AND FUNCTION |
|---|---|
| 1 | Hardtop closure replaces canvas cover on cab for arctic temperature operations. |
| 2 | Quilted engine compartment cover is attached to the brush guard, hood, and side panels to maintain normal operating temperatures during arctic temperature conditions. |
| 3 | Radiator cover flap is opened or closed to control the amount of air passing through the radiator. |
| 4 | Personnel heater fuel shutoff cock, when turned to right, shuts off fuel flow to personnel heater. |
| 5 | Engine coolant heater coolant shutoff cocks, when turned to right, shuts off engine coolant flow to engine coolant heater. |
| 6 | Engine coolant heater fuel shutoff cock, when turned to right, shuts off fuel flow to engine coolant heater. |

TA 094245

**b. Arctic Winterization Kit (Cont'd)**

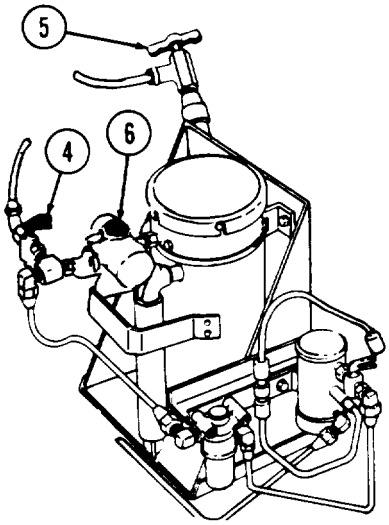


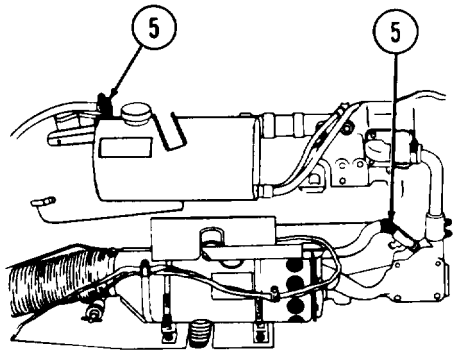


c. Deepwater Fording Kit.

| KEY | ITEM AND FUNCTION |
|---|---|
| 7 | Fording valve control handle closes crankcase ventilating system during fording operations when pulled out and opens crankcase ventilating system during normal operations when pushed in. |
| 8 | Flywheel housing drain port is plugged during fording operation: open during normal operation. |
| 9 | Stowage boss stores flywheel housing drainplug (10) during normal operations. |
| 10 | Flywheel housing drainplug is removed from stowage boss and installed in flywheel drain port (8) to prevent water from entering flywheel housing. |

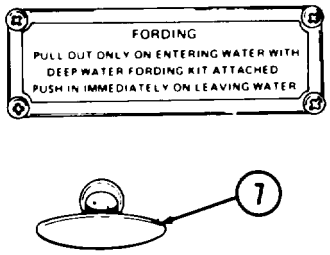


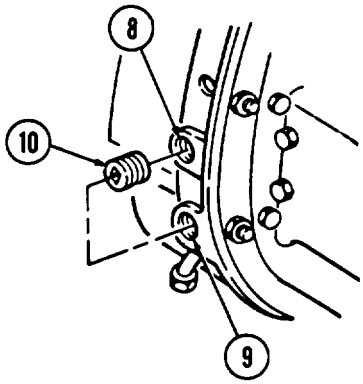


TA 094246

**d. Hot Water Personnel Heater Kit.**

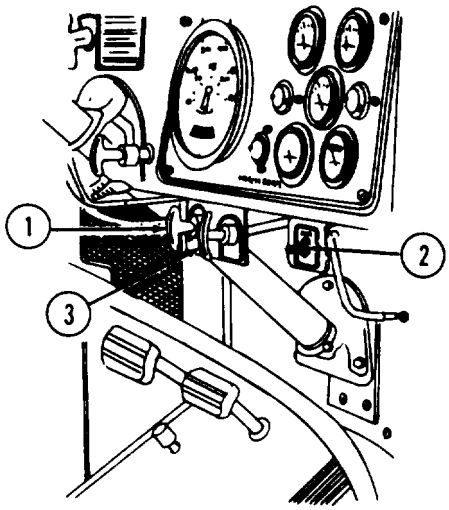


**KEY ITEM AND FUNCTION**

1 Defroster control handle is pulled all the way out for maximum windshield defroster operation: pushed all the way in for maximum heater operation: placed halfway out for combination operation.

2 Heater blower motor switch is set to HI or LO position to control flow of forced air into cab.

3 Air control handle is pulled all the way out for maximum heated air flow; pushed in to decrease or shut off air flow.

**e. Troop Seat and Paulin Kit (M817).**

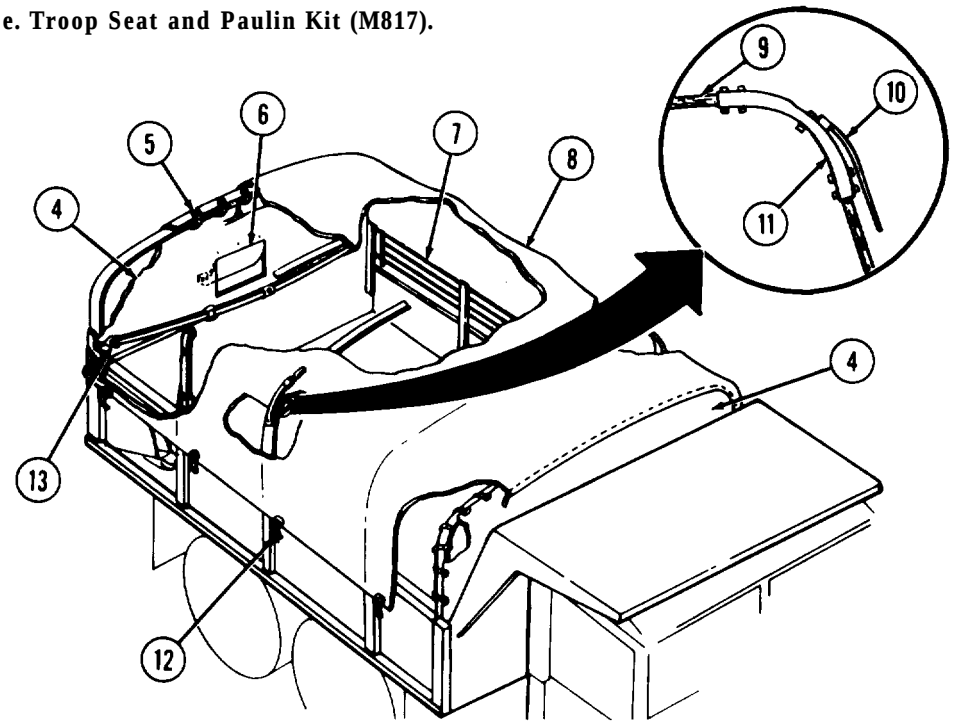


4 End curtains cover front and rear ends of cargo compartment.

5 Lashing rope secures end curtain to crossbow (9).

6 End flap opens and closes for ventilation.

7 Troop seats on each side can be secured up for cargo or down for seating as required.

TA 094247

**e. Troop Seat and Paulin Kit (M817) (Cont'd).**

8 Paulin protects top and sides of dump body.

9 Crossbows support paulin (8).

10 Straps secure paulin (8) top to crossbows (9) when sides are rolled up.

11 Stave and corner assemblies support crossbows (9).

12 Lashing hooks secure side of paulin (8) to truck bed.

13 Safety strap at tailgate protects passengers from falling off vehicle.

f. A-Frame Kit.

**NOTE**

A-frame kit can be used with front winch for loading or unloading cargo trucks. A-frame load limit is 3,000 lbs (1,362 kg).

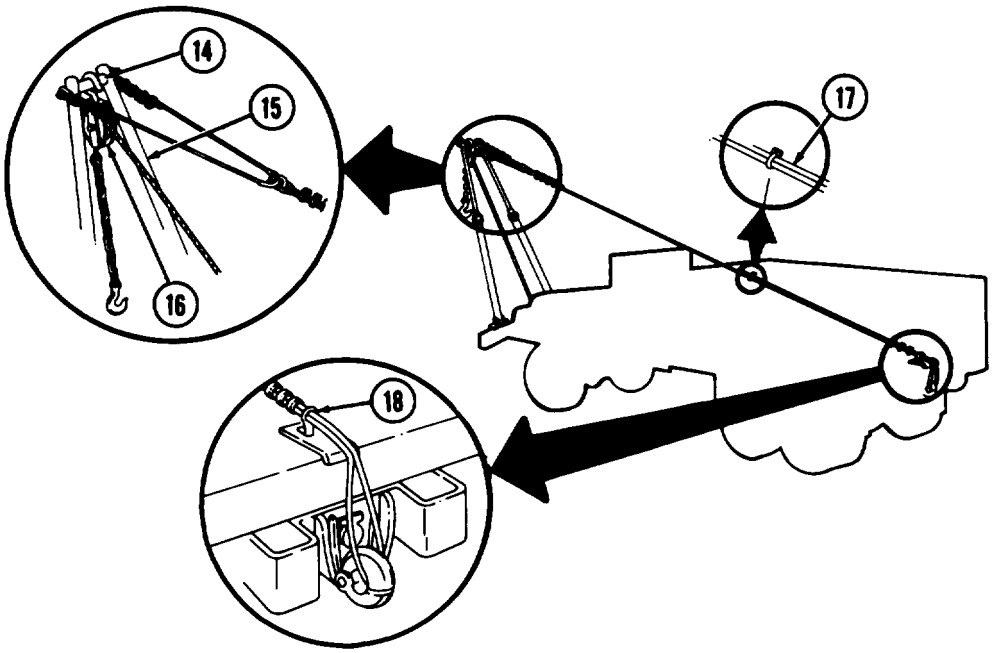


14 Apex spreader positions A-frame and supports sheave assembly (16).

15 Tube and leg assemblies are attached to lifting shackle brackets and apex spreader (14) to form an A-frame for lifting.

16 Sheave assembly supports front winch cable in lifting position.

17 Cable assembly is attached to A-frame and inverted pintle hook to maintain A-frame in position at a 60 degree angle.

18 Plate assembly protects cable assembly (17) and truck bed from wear and distortion.

TA 094248

## Section II. PREVENTIVE MAINTENANCE CHECKS AND SERVICES

**NOTE**

Operator maintenance is preventive maintenance. The duties of each operator are to keep the vehicle operational. These duties consist of maintenance checks and assisting in servicing the vehicle. They are not mechanical repairs. Mechanical repairs of M809 series vehicles are accomplished at the organizational maintenance level or higher.

### 2-7. GENERAL

A permanent record of the services; repair, and modifications made to these vehicles must be recorded. See DA Pam 738-750 for a list of the forms and records required. Refer to chapter 3, section IV for specific maintenance instructions.

### 2-8. CLEANING INSTRUCTIONS AND PRECAUTIONS

Cleaning is an after-operation service performed by operator/crew to keep the vehicle in a state of readiness. Facilities and material available to operators for vehicle cleaning can vary greatly in differing operating conditions. However, vehicles must be maintained in as clean a condition as available cleaning equipment, materials, and tactical situations permit.

**a. General Cleaning Precautions.**

(1) All cleaning procedures must be accomplished in well-ventilated areas.

(2) Protective gloves, clothing, and/or respiratory equipment must be worn whenever caustic, toxic, or flammable cleaning solutions are used.

(3) Diesel fuel or gasoline must never be used for cleaning.

(4) A fire extinguisher must be available and ready during all cleaning operations involving solvents.

**b. Special Precautions.**

(1) Do not allow cleaning compounds to come into contact with rubber, leather, vinyl, or canvas materials.

(2) Do not allow corrosion-removing cleaning compounds to contact painted surfaces.

(3) Do not use steam under pressure or air in cleaning truck cab interiors or van body interiors.

(4) Mildew must be removed with a bristle brush before canvas paulin can be properly cleaned and aired. Wash with warm. soapy water and dry with soft cloth.

(5) The radiator is always cleaned first from behind in order to blow debris, insects, or other obstructions out and away from the radiator core. Low pressure water or air can be used in cleaning radiator core of obstructions.

**c. Cleaning Materials.** Detailed descriptions of specific cleaning compounds, cleaning solvents, drycleaning solutions, and corrosion-removing compounds are found in TM 9-247.

**d. General Guidelines.** Table 2-1 provides a general guideline for cleaning materials used in removing contaminants from various vehicle surfaces.

TA 094249

**Table 2-1. General Cleaning Instructions**

| Cleaning Materials Used to Remove | | | |
|---|---|---|---|
| Surface | Oil/Grease | Sak/Mud/Dust/Debris | Surface Rust/Corrosion |
| Body | Crease-cleaning compound, running water, and damp or dry rags. | High pressure water, soapy warm water, soft brush, and damp or dry rags. | Corrosion-removing compound, bristle brush, dry rags, and lubricating oil.* |
| Cab Interior (Metals) | Grease cleaning compound, and damp or dry rags. | Damp or dry rags. | Corrosion-removing compound. bristle brush, dry rags. and lubricating oil. * |
| Cab Interior/ (Cab Top (Material, Paulin) | Saddle soap, warm water, soft brush, and dry rags. | Soft brush, soapy warm water. and damp or dry rags. | Not applicable. |
| Frame | Grease-cleaning compound rinsed with running water, and rags. | High pressure water. soapy warm water. soft wire brush, and damp or dry rags. | Corrosion-removing compound, wire brush, dry rags, and lubricating oil.* |
| Engine Transmission | Mixed solution l-part grease-cleaning compound, 4-parts dryclearring solvent, running water, and rags. | High pressure water, soapy warm water, soft wire brush. and damp or dry rags. | Bristle brush, warm soapy water. and dry rags. |
| Glass | (Glass cleaning solution and clean, dry rags. | Glass cleaning solution and clean, dry rags. | Not applicable. |
| Radiator | Not applicable. | Low pressure water/air, soapy warm water, and damp or dry rags. | Not applicable. |
| Rubber Insulation | Damp or dry rags. | Damp or dry rags. | Not applicable. |
| Tires | Soapy water, and bristle brush. | High pressure water, and bristle brush. | Not applicable. |
| Wire Rope | Cleaning compound and wire brush. | Wire brush. | Wire brush and lubricating oil. * |
| Wood | Detergent, warm water, and damp or dry rags. | Low pressure water, soapy warm water and damp or dry rags. | Not applicable. |
| Plastic Windows | Soapy water and soft, clean cloth, rinse with clean water. Apply cream cleaner after cleansing. | Soapy water and soft, clean cloth. Rinse with clean water. Apply cream cleaner after cleansing. | Not applicable. |

*After cleaning, apply light grade of lubricating oil to all unprotected surfaces to prevent continued rust.

TA 094250

## 2-9. PREVENTIVE MAINTENANCE CHECKS AND SERVICES (PMCS)

Your Preventive Maintenance Checks and Services, table 2-2, lists the inspections and care of your equipment required to keep it in good operating condition.

a. Item Number. This column shall be used as a source of item numbers for the "TM Number" column on DA form 2404, Equipment Inspection and Maintenance Worksheet, in recording results of PMCS.

b. Designated Intervals. The interval column of your PMCS table tells you when to perform a certain check or service.

**NOTE**

Observe all warnings and cautions.

(1) BEFORE checks and services (B): Checks and services performed prior to equipment leaving its containment area or performing its intended mission.

(2) DURING checks (D): Checks begin when equipment is being used in its intended mission.

(3) AFTER checks and services (A): Checks and services begin when equipment is taken out of its mission mode or returned to the containment area.

(4) WEEKLY checks and services (W) of PREVENTIVE MAINTENANCE are performed once every seven days.

(5) MONTHLY checks and services (M) of PREVENTIVE MAINTENANCE are performed once every 30 days.

c. Procedures. The procedure column of your PMCS table tells you the specific required checks and services. Carefully follow these instructions. If you do not have the tools, or if the procedure tells you to, have organizational maintenance do the work.

(1) Troubleshoot malfunctions. (Refer to table 3-1.)

(2) Use DA form 2404 and report non-repairable item(s) to organizational maintenance.

(3) Tools included with vehicle are to be used when performing PREVENTIVE MAINTENANCE checks and services. Wiping cloths are sometimes needed to remove dirt or grease.

d. Not Ready Condition. If a vehicle is not able to perform the prescribed mission, equipment will be reported as not ready or unavailable. Refer to DA Pam 738-750.

**NOTE**

The terms “ready/available” and “mission capable” refer to the same status, “equipment on hand and able to perform its combat mission”.

**NOTE**

If you see anything that looks wrong, report it! You do not need a “not ready/available if:" statement or an inspection procedure in order to report it.

TA 094251

**e. Troublespots.**

**WARNING**

Drycleaning solvent is flammable, Do not use near open flame. Keep a fire extinguisher nearby when solvent is used. Use only in well-ventilated work place. Fire and serious injury can result.

**NOTE**

Dirt, grease, oil. and debris may cover up a serious problem. Clean as you check. Follow precautions printed on container. Use drycleaning solvent on all metal surfaces. Use soap and water on rubber or plastic material.

**(1)** Check all bolts, nuts, and screws. If loose, bent, broken, or missing, report to organizational maintenance.

**(2)** Look for loose or chipped paint and rust or gaps at welds. If a cracked or broken weld is found, report to organizational maintenance.

**(3)** Inspect electrical wires and connectors for cracked or broken insulation. Look for bare wires and loose or broken connections. If insulation is cracked or broken. wires bare, or loose or broken connections, report to organizational maintenance.

**(4)** Check hoses and fluid lines for wear, damage, and leaks. Make sure clamps and fittings are tight. (Refer to paragraph 2-10 for information on leaks. )

**f. Correct Assembly or Stowage.** Check each component for installation as an assembly, in the right place, and with no missing parts.

## 2-10. CLASS LEAKAGE DEFINITIONS

Wetness around seals, gaskets, fittings. or connections indicates leakage. A stain also denotes leakage. If a fitting or connector is loose, broken, or defective, report it. Use the following as a guide:

**a. Class I.** Leakage indicated by wetness or discoloration not great enough to form drops.

**b. Class II.** Leakage great enough to form drops but not enough to cause drops to drip from item being checked/ inspected.

**c. Class III.** Leakage great enough to form drops that fall from the item being checked/inspected.

**CAUTION**

Operation is allowable with class or II leakage. You must consider fluid capacity of the item/system. WHEN IN DOUBT, NOTIFY YOUR SUPERVISOR. When operating with class I or II leaks, check fluid levels as required in the PMCS. Class III leaks must be reported immediately to your supervisor and to organizational maintenance.

## 2-10.1. PMCS TABLE

**NOTE**

These checks are to be made in the order listed, within designated interval.

Walk-around inspections will begin at the front of the vehicle and proceed around the crewmember's side (right side), around the rear of the vehicle, and continue up the driver's side (left side). If inspection items are found in more than one location, cover the entire vehicle. Reinspection is required after a change in engine run-up condition, and is not complete until all areas have been inspected or reinspected.

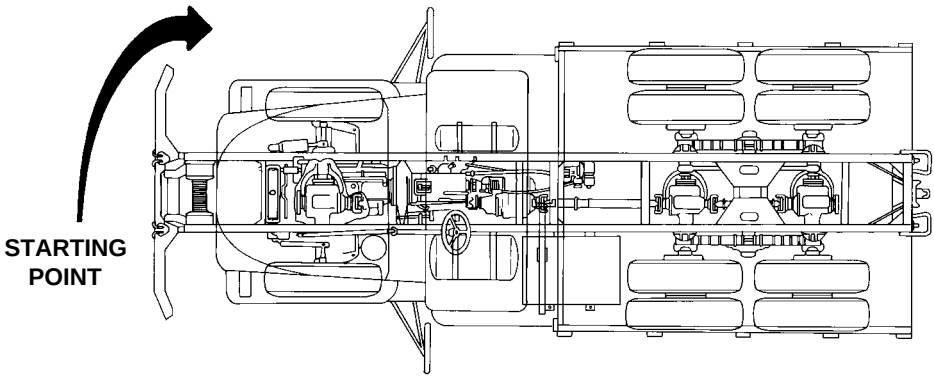


*Table 2-2. Preventive Maintenance Checks and Services.*

| ITEM NO. | INTERVAL | LOCATION<br>ITEM TO CHECK/ SERVICE | CREWMEMBER PROCEDURE | NOT FULLY MISSION CAPABLE IF: |
|---|---|---|---|---|
| | | | **WARNING**<br>HIGH INTENSITYNOISE<br>Hearing protection is required for all personnel working in and around this vehicle with the engine running.<br>**NOTE**<br>Always remember the CAUTIONS, WARNINGS, and NOTES before operating this vehicle and prior to PMCS.<br>Perform all before, during, after, and weekly checks if:<br>**a.** You are the assigned driver but have not operated the vehicle since the last weekly inspection.<br>**b.** You are operating the vehicle for the first time. | |

*Table 2-2. Preventive Maintenance Checks and Services (Cont'd).*

| ITEM NO. | INTERVAL | LOCATION<br>ITEM TO CHECK/ SERVICE | CREWMEMBER<br>PROCEDURE | NOT FULLY MISSION CAPABLE IF: |
|---|---|---|---|---|
| | | | **EXTERIOR OFVEHICLE**<br>DRIVER<br>**NOTE**<br>If leakage is detected, further investigation is needed to determine the location and cause of the leak (para. 2-10). | |
| 1 | Before | Front of Vehicle | **a.** Look under vehicle for obvious fluid leaks such as oil, fuel, and water (para. 2-10).<br>**b.** Visually check for obvious damage that would prevent operation.<br>**NOTE**<br>Operation of vehicle with inoperative lights may violate AR 385-55.<br>**c.** Check operation of headlights (5), turn signals (3), and blackout lights (2).<br>**d.** Ensure service (9) and emergency (4) gladhand valves are closed.<br>**e.** Ensure gladhand covers (8) are installed. | **a.** Any class III leak is evident.<br>**b.** Any damage that will prevent operation. |
| 2 | Before | Windshield Wipers | DRIVER<br>**NOTE**<br>Cracked or broken windshield may violate AR 385-55.<br>**a**. Check windshield (1) for any cracks that would impair vision.<br>**b.** Check wiper arms (6) and blades (7) for damage. | |

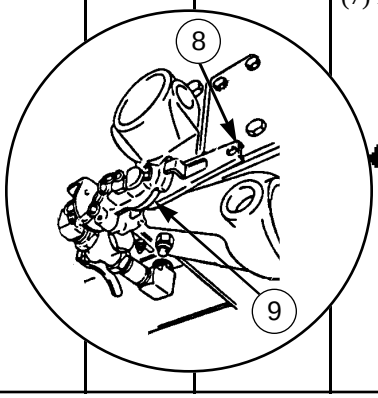


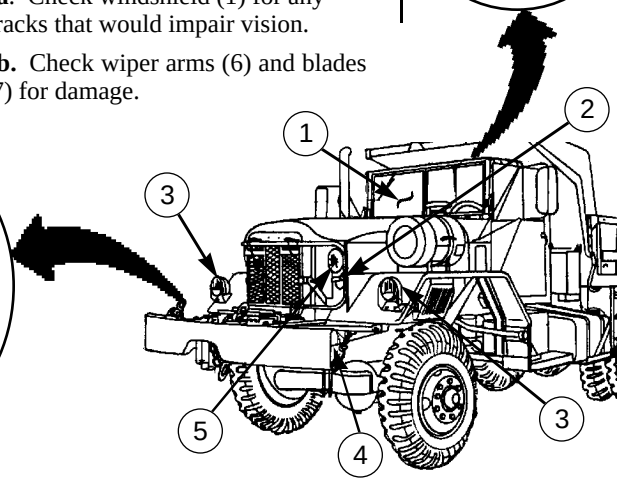

*Table 2-2. Preventive Maintenance Checks and Services (Cont'd).*

| ITEM NO. | INTERVAL | LOCATION<br>ITEM TO CHECK/ SERVICE | CREWMEMBER<br>PROCEDURE | NOT FULLY MISSION CAPABLE IF: |
|---|---|---|---|---|
| | | | DRIVER<br>**NOTE**<br>If leakage is detected, further investigation is needed to determine the location and cause of the leak (para. 2-10). | |
| 3 | Before | Right Front, Side Exterior | **a.** Look under vehicle for obvious fluid leaks such as oil, fuel, and water (para. 2-10). | **a.** Any class III leak is evident. |
| | | | **b.** Visually check for obvious damage that would prevent operation. | **b.** Any damage that will prevent operation. |
| | | | DRIVER | |
| 4 | Before | Right Side Tire(s) | **a.** Visually check tires (2) for presence and underinflation (para. 3-16). | **a.** Vehicles with dual rear tires have two or more missing or unserviceable tires. Vehicles with super singles have any missing or unserviceable tires. |

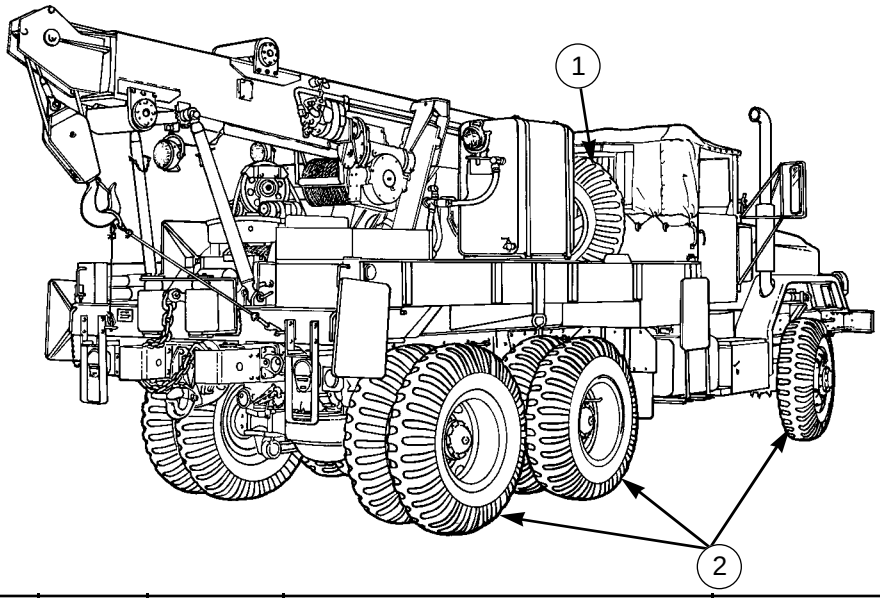

*Table 2-2. Preventive Maintenance Checks and Services (Cont'd).*

| ITEM NO. | INTERVAL | LOCATION<br>ITEM TO CHECK/ SERVICE | CREWMEMBER<br>PROCEDURE | NOT FULLY MISSION CAPABLE IF: |
|---|---|---|---|---|
| 4 (Cont'd) | Before | Right Side Tire(s) | **b.** If a tire (2) is damaged, replace with spare (1) (para. 3-15). | **b.** Tire(s) have cuts, gouges, cracks, or leaks that would cause tire failure. |
| | | | **c.** Check for cupping or worn tires (2); replace with spare (1) (para. 3-15). | **c.** Tire(s) have cupping which cause erratic steering. |
| | | | DRIVER<br>**NOTE**<br>Item 5 applies to M818 and M819 models only. | |
| 5 | Before | Fifth Wheel | **a**. Inspect fifth wheel (4), locking mechanism (5), and approach plates (3) for bends and damage. | **a**. Damage causes fifth wheel to be inoperative. |
| | | | **b.** Check fifth wheel (4) subframe rivets (6). | **b**. Any rivets are loose or missing. |
| | | | **c**. Inspect fifth wheel mounting brackets for broken welds, cracked or damaged components, or worn parts. | **c**. Fifth wheel mounting brackets have broken welds or damaged components. |
| | | | **d.** While coupling tractor and trailer, determine if fifth wheel (4) works properly. | **d.** Faulty coupling or uncoupling action is evident. |

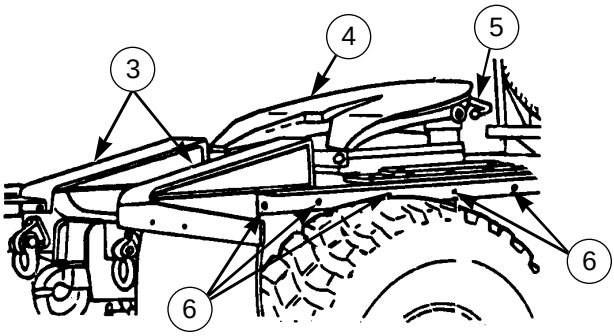

*Table 2-2. Preventive Maintenance Checks and Services (Cont'd).*

| ITEM NO. | INTERVAL | LOCATION<br>ITEM TO CHECK/ SERVICE | CREWMEMBER<br>PROCEDURE | NOT FULLY MISSION CAPABLE IF: |
|---|---|---|---|---|
| | | | DRIVER | |
| 6 | Before | Trailer Connecting Accessories | **a.** Inspect electrical cable (1) and connector (2) for cracks, breaks, and other damage.<br><br>**b.** Inspect emergency air/brake hose lines (3).<br> 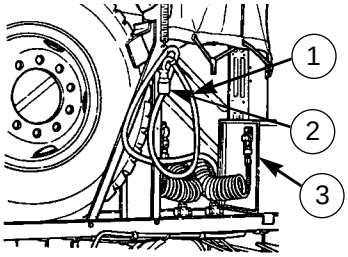 | **a.** Cable or connector is cracked, broken, missing, or unserviceable.<br><br>**b.** Air/brake hose lines are loose or missing. |
| | | | DRIVER | |
| 6.1 | Before | Engine Coolant Heater | Inspect fuel burning personnel and engine coolant heaters for the following:<br>(1) Before operating heaters, depress indicator lamps (4) to make sure they illiminate.<br>(2) Make sure all coolant shutoff valves (5) and fuel shutoff valves (6) are open. | |

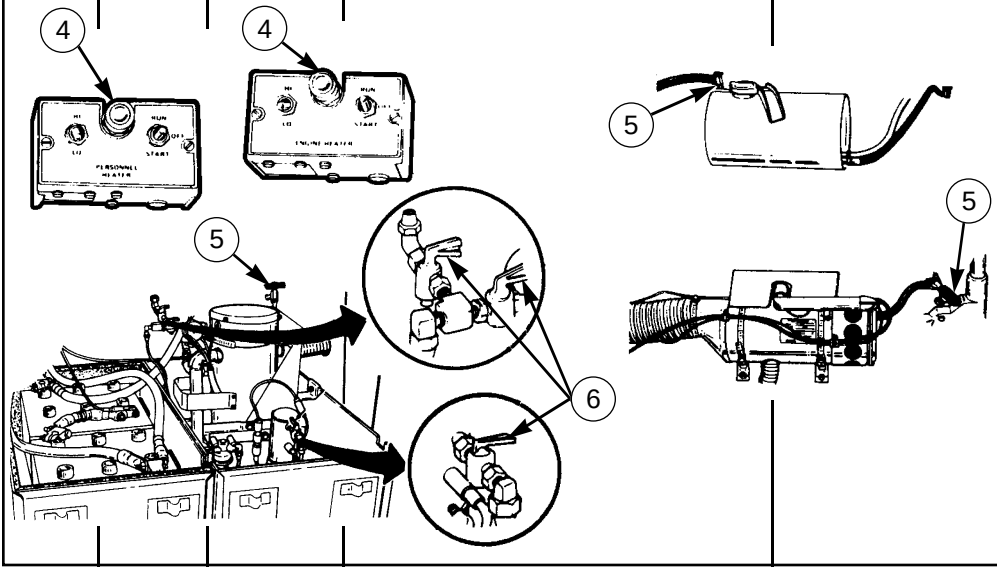

*Table 2-2. Preventive Maintenance Checks and Services (Cont'd).*

| ITEM NO. | INTERVAL | LOCATION<br>ITEM TO CHECK/ SERVICE | CREWMEMBER<br>PROCEDURE | NOT FULLY MISSION CAPABLE IF: |
|---|---|---|---|---|
| | | | DRIVER<br>**NOTE**<br>If leakage is detected, further investigation is required to determine location and cause of leak (para.2-10). | |
| 7 | Before | Rear and Under Rear of Vehicle | **a.** Look under vehicle for obvious fluid leaks such as oil and fuel.<br>**b.** Visually check for obvious damage that would impair operation.<br>**c.** Check operation of taillights (8), turn signals (8), and brake lights (8).<br>**d.** Ensure service (10) and emergency (7) gladhand valves are closed.<br>**e.** Ensure gladhand covers (9) are installed. | **a.** Any class III leak is evident.<br>**b.** Any damage that will prevent operation.<br>**c.** One brake light inoperative. |

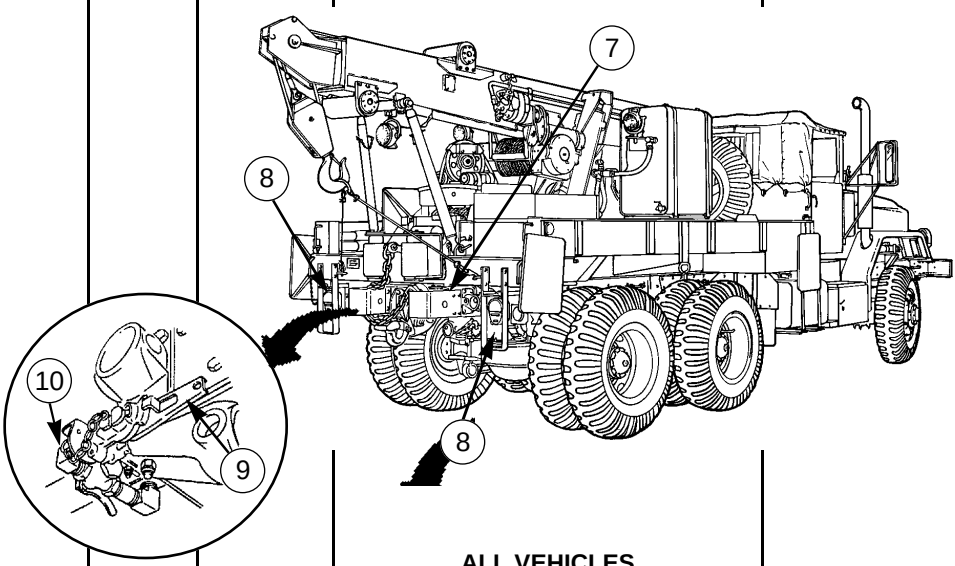


**ALL VEHICLES (EXCEPT M818)**

*Table 2-2. Preventive Maintenance Checks and Services (Cont'd).*

| ITEM NO. | INTERVAL | LOCATION<br>ITEM TO CHECK/ SERVICE | CREWMEMBER PROCEDURE | NOT FULLY MISSION CAPABLE IF: |
|---|---|---|---|---|
| LUBRICANTS | | | EXPECTED TEMPERATURES | |
| | | | Above +80°F (+27°C) / +80 TO + 30°F (+27 TO -1°C) / +30 TO -30°F (-1 TO -34°C) / -30 TO -65°F (-34 TO -54°C) | |
| CW- Lubricating Oil (VV-L-751) | | | CW-11C / CW-11B / CW-11A / GO75 | |
| 8 | Before | Rear Winch | DRIVER<br>**WARNING**<br>Wear hand protection when handling cable. Do not handle cable with bare hands. Broken wires will cause injury.<br>**NOTE**<br>Item 8 applies to M816 models only.<br>**a.** Visually check winch hoses and lines for signs of deterioration and leakage.<br>**b.** Check cable (1) for kinks, frays, breaks, and if missing.<br>**c.** Clean and oil cable (1) after each operation. If used infrequently or in very damp or salty condition, perform lubrication (LO 9-2320-260-12). Do not lubricate cable (1) in dry, dusty conditions. | **a.** Any class III leak is evident.<br>**b.** Cable has kinks, frays, breaks, or is missing. |

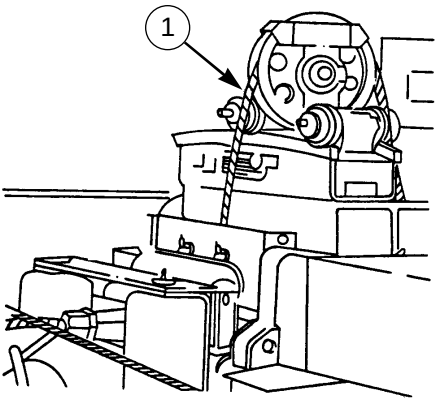

*Table 2-2. Preventive Maintenance Checks and Services (Cont'd).*

| ITEM NO. | INTERVAL | LOCATION<br>ITEM TO CHECK/ SERVICE | CREWMEMBER<br>PROCEDURE | NOT FULLY MISSION CAPABLE IF: |
|---|---|---|---|---|
| | | | DRIVER | |
| 9 | Before | Left Side Tires | **a.** Visually check left side tires (3) for presence and underinflation (para. 3-16). | **a.** Vehicles with dual rear tires have two or more missing or unserviceable tires. Vehicles with super singles have any missing or unserviceable tires. |
| | | | **b.** If a tire (3) is damaged, replace with spare (2) (para. 3-15). | **b.** Tire(s) have cuts, gouges, cracks, or leaks that would cause tire failure. |
| | | | **c.** Check for cupping or worn tires (3); replace with spare (2) (para. 3-15). | **c.** Tire(s) have cupping which cause erratic steering. |

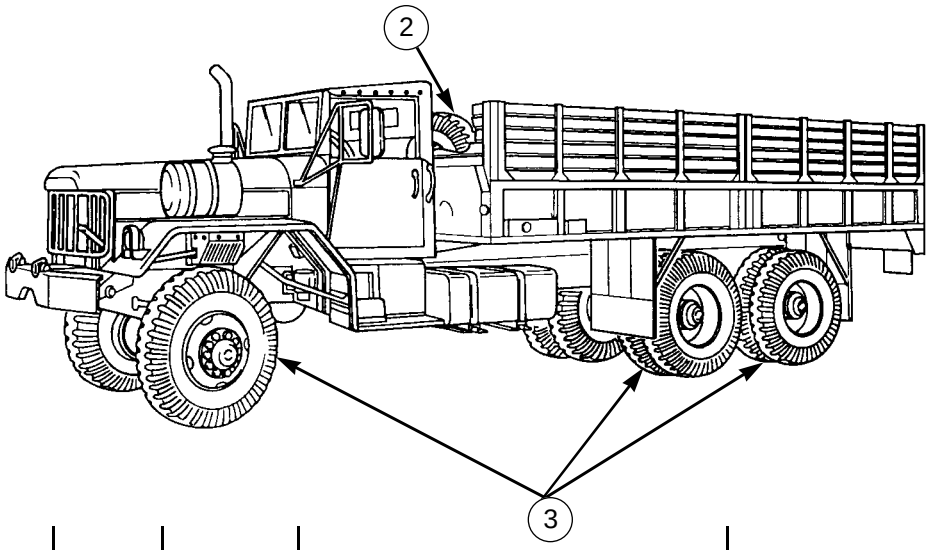

*Table 2-2. Preventive Maintenance Checks and Services (Cont'd).*

| ITEM NO. | INTERVAL | LOCATION<br>ITEM TO CHECK/ SERVICE | CREWMEMBER<br>PROCEDURE | NOT FULLY MISSION CAPABLE IF: |
|---|---|---|---|---|
| 10 | Before | Air Tank Drain | DRIVER<br>Ensure draincock (2) is tightly closed. Draincock for both reservoirs is under left running board (1). | Draincock leaks. |
| | | | 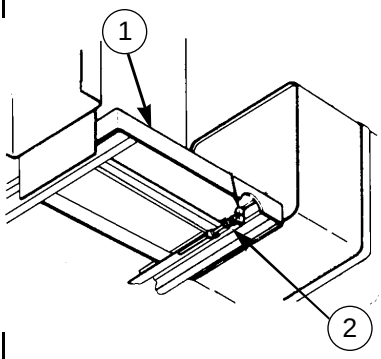 | |
| | | | **NOTE**<br>Two fire extinguishers are located inside van body on M820/A1/A2 series vehicles, and behind gondola cab on M816 series vehicles. Refer to Appendix E for exact locations. | |
| 11 | Before | Fire Extinguisher | DRIVER<br>**a.** Check for missing or damaged fire extinguisher (3).<br>**b.** Check gauge (5) for proper pressure of about 150 psi (1,034 kPa).<br>**c.** Check for damaged or missing seal (4). | **a.** Fire extinguisher missing or damaged.<br>**b.** Pressure gauge needle in recharge area.<br>**c.** Seal broken or missing. |
| | | | 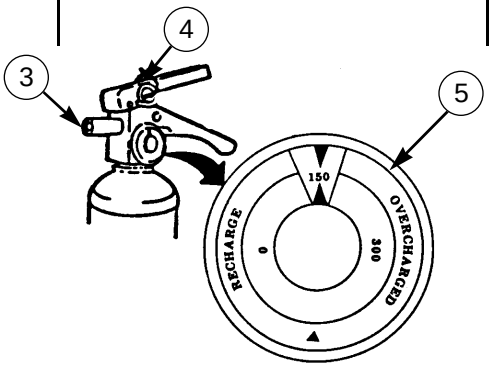 | |

*Table 2-2. Preventive Maintenance Checks and Services (Cont'd).*

| ITEM NO. | INTERVAL | LOCATION<br>ITEM TO CHECK/ SERVICE | CREWMEMBER<br>PROCEDURE | NOT FULLY MISSION CAPABLE IF: |
|---|---|---|---|---|
| | | | DRIVER<br>**NOTE**<br>If leakage is detected, further investigation is needed to determine the location and cause of the leak (para. 2-10). | |
| 12 | Before | Left Front, Side Exterior | **a.** Look under vehicle for obvious fluid leaks such as oil, fuel, and water (para. 2-10). | **a.** Any class III leak is evident. |
| | | | **b.** Visually check for obvious damage that would prevent operation. | **b.** Any damage will prevent operation. |
| | | | **c.** Check fuel tank (6) for leaks created by damage or expansion of fuel. | **c.** Any class III leak is evident. |
| | | | DRIVER | |
| 13 | Before | Frame | Visually check for damage to springs and shock absorbers. | Any leafs or shocks are broken. |

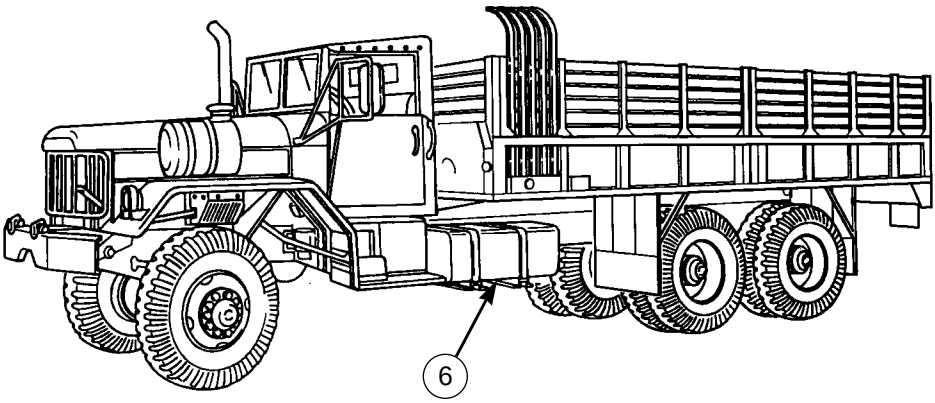

*Table 2-2. Preventive Maintenance Checks and Services (Cont'd).*

| ITEM NO. | INTERVAL | LOCATION<br>ITEM TO CHECK/ SERVICE | CREWMEMBER PROCEDURE | NOT FULLY MISSION CAPABLE IF: |
|---|---|---|---|---|
| | | | **INTERIOR OF VEHICLE**<br>DRIVER<br>**WARNING**<br>If NBC exposure is suspected, all air filter media should be handled by personnel wearing protective equipment. Consult your unit NBC officer or NBC NCO for appropriate handling caution or disposal instructions.<br>**CAUTION**<br>If oil pressure gauge reads 0 psi, stop engine. Failure to do so may cause damage to internal engine components.<br>**NOTE**<br>The engine must be running to perform the following checks. | |
| 14 | Before | Controls and Instruments | **a.** Start engine (para. 2-12). | **a.** Engine will not start. |
| | | | **b.** Listen for unusual noises or vibrations, especially during acceleration. | **b.** Unusual noises or vibrations are detected. |
| | | | **c.** Check for missing or damaged seatbelts. | **c.** Seatbelt(s) are missing or damaged. |
| | | | **d.** Air cleaner indicator (3) should be in green area (para. 3-11). | **d.** Air cleaner indicator is cracked, unserviceable, or stays in red area. |
| | | | **e.** Tachometer (1) should read 550-650 rpm at idle. | **e.** Tachometer inoperable or reads less than 550 rpm or more than 650 rpm at idle. |
| | | | **f.** Check engine water temperature gauge (2). (Normal range is 175-200°F (79-93°C) with engine warmed up.) | **f.** Temperature gauge reads less than 175°F (79°C) or exceeds 220°F (104°C). |
| | | | **g.** Check air pressure gauge (5). Normal range is 90-130 psi (621-896 kPa). Ensure warning buzzer is operational. | **g.** Air pressure reads less than 64 psi (441 kPa). Warning buzzer stays on or it does not operate. |

*Table 2-2. Preventive Maintenance Checks and Services (Cont'd).*

| ITEM NO. | INTERVAL | LOCATION<br>ITEM TO CHECK/ SERVICE | CREWMEMBER PROCEDURE | NOT FULLY MISSION CAPABLE IF: |
|---|---|---|---|---|
| 14 (Cont'd) | Before | Controls and Instruments | **h.** Check voltmeter (4). Needle should be in green area.<br><br>**i.** Ensure engine oil pressure gauge (6) reads at least 15 psi (103 kPa).<br><br>**NOTE**<br>Operation of vehicle with inoperative horn may violate AR 385-55.<br><br>**j.** Check horn (7) for operation if tactical situation permits. | **h.** Readings above or below green area or inoperative.<br><br>**i.** Engine oil pressure is less than 15 psi (103 kPa). |

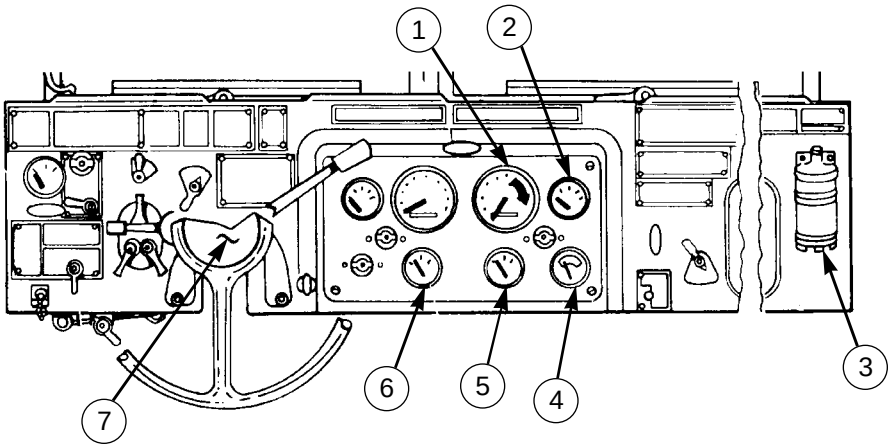

*Table 2-2. Preventive Maintenance Checks and Services (Cont'd).*

| ITEM NO. | INTERVAL | LOCATION<br>ITEM TO CHECK/ SERVICE | CREWMEMBER<br>PROCEDURE | NOT FULLY MISSION CAPABLE IF: |
|---|---|---|---|---|
| 14 (Cont'd) | Before | Controls and Instruments | **k.** Check transmission gearshift lever (1) and transfer case shift lever (4). Shift in all ranges, observing unusual stiffness, abnormal operation, or binding. | **k.** Transmission gearshift lever or transfer case shift lever inoperative or binding. |
| | | | **l.** Check steering response. | **l.** Steering binds or is unresponsive. |
| | | | **m.** Listen for leakage in exhaust system. | **m.** Any leak could cause injury to personnel. |
| | | | **n.** Operate service brakes (6) to determine stopping ability. | **n.** Pedal feels soft and/or no resistance. |
| | | | **o.** Determine parking brake ability to hold vehicle by first engaging parking brake lever handle (2), then engaging transmission gearshift lever (1) in 5th gear high range. Vehicle should not move when clutch (5) is slowly released. | **o.** Vehicle moves when parking brake lever handle is applied. |
| | | | **p.** Adjust parking brake as required by moving knob (3) on top of brake lever handle (2) clockwise to increase braking action; counterclockwise to decrease braking action. | **p.** Parking brake does not hold properly after being adjusted or parking brake knob cannot be adjusted. |
| | | | 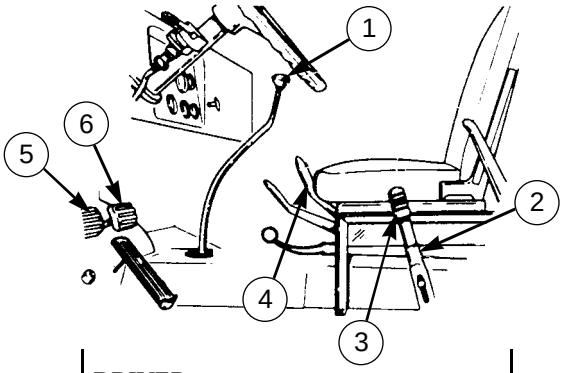 | |
| | | | DRIVER | |
| 15 | Before | Clutch | Check clutch (5) for drag, noise, chatter, grab, and slippage. | Clutch is inoperative, slipping, or definite grab or chatter is evident. |

*Table 2-2. Preventive Maintenance Checks and Services (Cont'd).*

| ITEM NO. | INTERVAL | LOCATION<br>ITEM TO CHECK/ SERVICE | CREWMEMBER PROCEDURE | NOT FULLY MISSION CAPABLE IF: |
|---|---|---|---|---|
| | | | **EXTERIOR OFVEHICLE**<br>DRIVER | |
| 16 | Before | Van Hydraulic Liftgate | **a.** Before operating liftgate (7), inspect hydraulic hoses for leaks, abrasions, and fittings. | **a.** Any class III leak is evident. |
| | | | 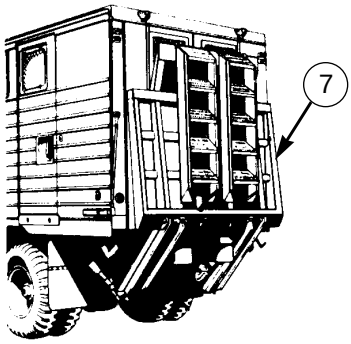 | |
| | | | **CAUTION**<br>Before opening reservoir, ensure area around reservoir filler cap is clean. Do not allow dirt, dust, or water to enter reservoir. Failure to do this will cause damage to internal components. | |
| | | | **b.** Check hydraulic oil level by removing filler cap (8) and pulling out dipstick (9). Oil level should be at the third mark from top of gauge, with lift-gate up in traveling position. If oil level is low, fill to top line (LO 9-2320-260-12). After check, ensure filter cap (8) is tight. | **b.** Any class III leak is evident. |
| | | | 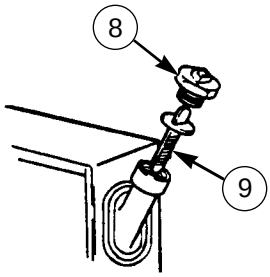 | |

*Table 2-2. Preventive Maintenance Checks and Services (Cont'd).*

| ITEM NO. | INTERVAL | LOCATION<br>ITEM TO CHECK/ SERVICE | CREWMEMBER<br>PROCEDURE | NOT FULLY MISSION CAPABLE IF: |
|---|---|---|---|---|
| | | | DRIVER<br>**WARNING**<br>Stay clear of dump body and cab protector at all times during loading and unloading operations. The dump body can raise accidentally when overloaded or when a heavy load is dumped into the dump body. This can result in serious injury.<br>**CAUTION**<br>With dump body in raised position, do not jerk vehicle by moving forward and backward to free material flow from under the tailgate. This will cause damage to the dump body hoist and dumping mechanism. | |
| 17 | Before | M817 Dump Truck | **a.** Before operating dump truck hoist, inspect hydraulic lines and hoses for signs of leakage or deterioration. | **a.** Any class III leak is evident. |
| | | | 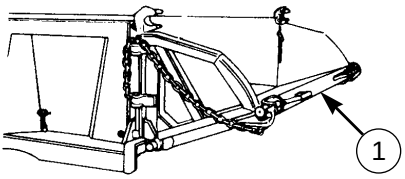 | |
| | | | **b.** Check for proper operation of tailgate control linkage by: first, pulling tailgate control rod hand lever (2) forward and down to unlock tailgate latches and second, pushing it up and back to lock tailgate (1). | **b.** Tailgate control linkage inoperable. |
| | | | 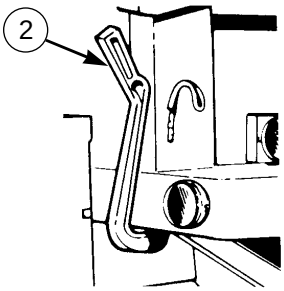 | |

*Table 2-2. Preventive Maintenance Checks and Services (Cont'd).*

| ITEM NO. | INTERVAL | LOCATION<br>ITEM TO CHECK/ SERVICE | CREWMEMBER<br>PROCEDURE | NOT FULLY MISSION CAPABLE IF: |
|---|---|---|---|---|
| | | | DRIVER | |
| 18 | Before | Trailer Brakes | **a.** Couple and uncouple tractor (5) and trailer (3) to determine if fifth wheel (4) and locking mechanism (6) are working properly (para. 2-27).<br><br>**NOTE**<br>Perform this check with the trailer empty and the trailer loaded after the tractor/trailer are coupled. | **a.** Tractor and trailer will not couple properly, or locking mechanism fails to hold. |
| | | | **b.** Check for air leaks at the inter-vehicular connecting hoses, relay valve, and air reservoirs (para. 3-12). | **b.** Any air leaks are present. Coupling or uncoupling action faulty. |

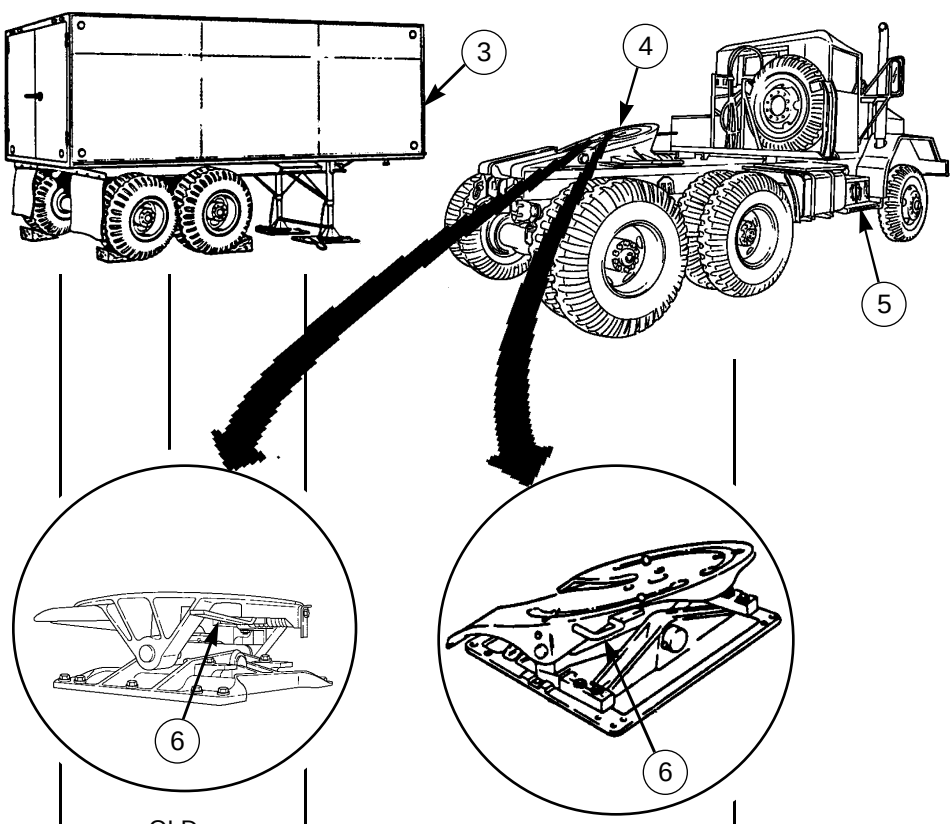

*Table 2-2. Preventive Maintenance Checks and Services (Cont'd).*

| ITEM NO. | INTERVAL | LOCATION<br>ITEM TO CHECK/ SERVICE | CREWMEMBER PROCEDURE | NOT FULLY MISSION CAPABLE IF: |
|---|---|---|---|---|
| 18 (Cont'd) | Before | Trailer Brakes | **c.** Before moving with any towed vehicle, ensure airbrake control lever (1) is working properly by pulling down lever to apply brakes to towed vehicle; push up to release brakes.<br> 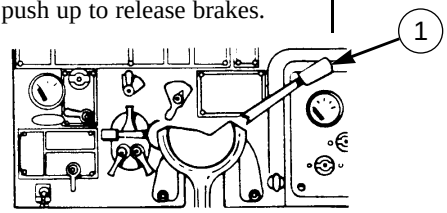 <br><br>DRIVER<br>**WARNING**<br>• Vehicle will become charged with electricity if crane contacts or breaks high-voltage wire. Do not leave vehicle while high-voltage lines are in contact with crane or vehicle. Failure to do this will result in injury or death. Signal nearby personnel to have electrical power turned off.<br>• Wear hand protection when handling cable. Do not handle cable with bare hands. Broken wires will cause injury. | **c.** Brakes fail to hold tractor/trailer combination from moving. |
| 19 | Before | Medium Wrecker | **a.** Before using crane, remove reservoir cap and dipstick (2) and measure reservoir oil level. Add oil as required (LO 9-2320-260-12).<br>**b.** While operating crane, check filter (4) on front of crane oil reservoir (3). Filter indicator (5) should point to CLEAN. If not, notify your supervisor.<br> 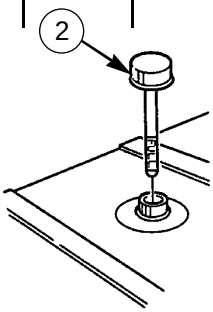 <br><br> 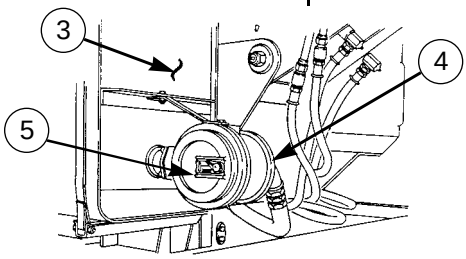 <br> | |

*Table 2-2. Preventive Maintenance Checks and Services (Cont'd).*

| ITEM NO. | INTERVAL | LOCATION<br>ITEM TO CHECK/ SERVICE | CREWMEMBER PROCEDURE | NOT FULLY MISSION CAPABLE IF: |
|---|---|---|---|---|
| 19 (Cont'd) | Before | Medium Wrecker | **c.** Operate crane through full range of elevation and rotation, and boom extension to determine performance of crane boom (7), hoist (6), and crane controls (10). Movement should be free and without hydraulic leaks.<br>**d.** Stop engine (para. 2-16).<br>**e.** Inspect hoist cable (8) for breaks, kinks, and frays. Check sheaves (9) for damage. | **c.** Crane is inoperative, or any class III leakage is evident.<br>**e.** Cable broken, kinked, frayed, or missing. Sheaves missing or damaged. |

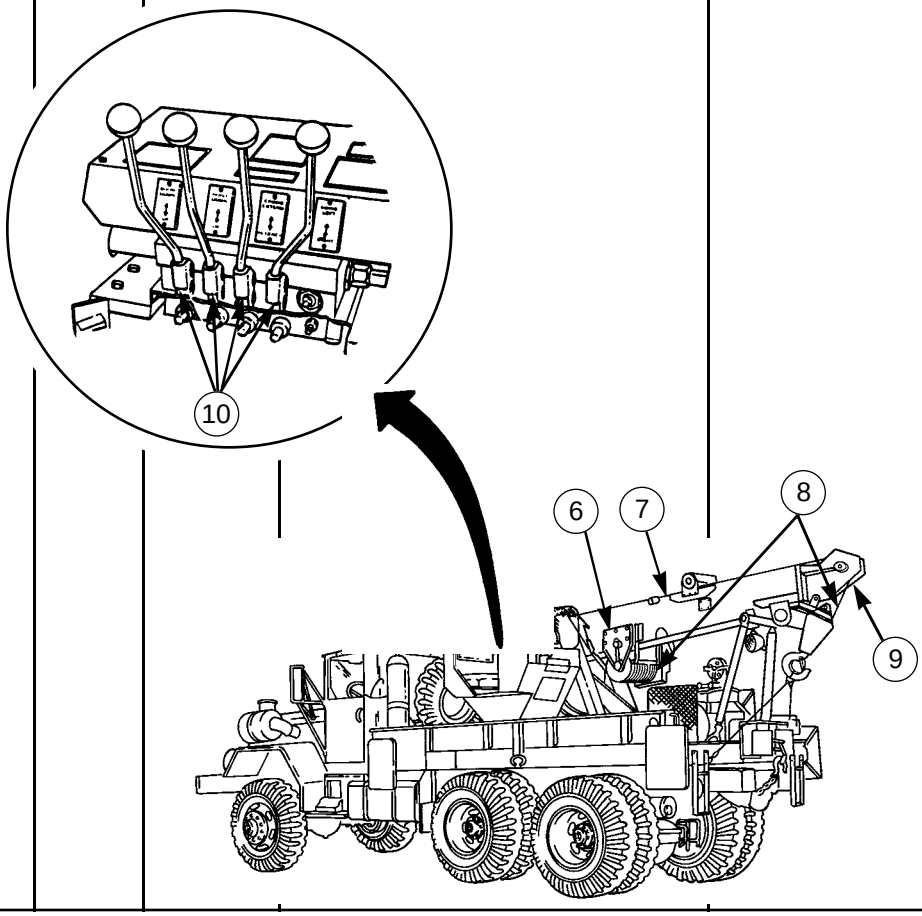

*Table 2-2. Preventive Maintenance Checks and Services (Cont'd).*

| ITEM NO. | INTERVAL | LOCATION<br>ITEM TO CHECK/ SERVICE | CREWMEMBER<br>PROCEDURE | NOT FULLY MISSION CAPABLE IF: |
|---|---|---|---|---|
| 20 | Before | Deepwater Fording Kit | DRIVER<br>**a.** Check that flywheel drainplug (1) is properly installed on all vehicles.<br>**b.** For tractor wreckers, ensure pipe plugs (2) are installed. | |
| | | | **c.** Check air intake (3) and exhaust systems for complete, secure assembly.<br>**d.** Check operation of control handle (4) to ensure fording valves open and close. | **d.** Handle does not operate properly. |
| 21 | During | Brake System | DRIVER<br>While driving, operate service brakes to determine ability to stop. Check for pulling, grabbing, or other abnormal operation. | Service brakes do not operate properly. |
| 22 | During | Front and Rear Drive Axles and Propeller Shafts | DRIVER<br>Be alert for unusual noises or vibrations. Vibrations, clinking or clunking noises indicate worn U-joints and damaged propeller shafts. | Any propeller shaft is missing or damaged, unusual noises or vibrations evident. |

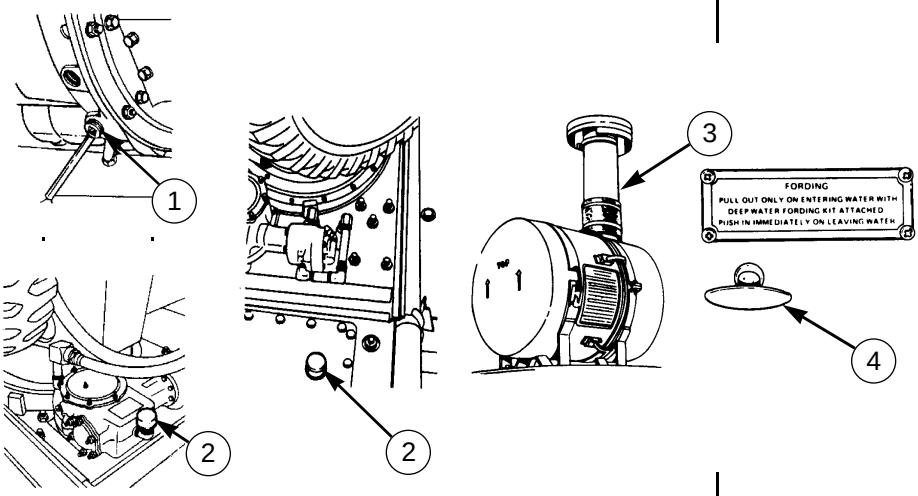

*Table 2-2. Preventive Maintenance Checks and Services (Cont'd).*

| ITEM NO. | INTERVAL | LOCATION<br>ITEM TO CHECK/ SERVICE | CREWMEMBER<br>PROCEDURE | NOT FULLY MISSION CAPABLE IF: |
|---|---|---|---|---|
| | | | DRIVER | |
| 23 | During | Steering/ Swaying | Check vehicle steering response for unusual free play, binding, wander, or shimmy. | Loose or binding steering action, or steering wheel difficult to turn. Steering inoperative. |
| | | | DRIVER | |
| 24 | During | Gauges | **a**. Monitor all gauges during operation (para. 2-4). | |
| | | | **CAUTION**<br>If oil pressure gauge reads 0 psi, stop engine. Failure to do so may cause damage to internal engine components. | |
| | | | **b.** Engine oil pressure gauge reads less than 15 psi (103 kPa). | **b.** Engine oil pressure is less than 15 psi (103 kPa). |
| | | | DRIVER | |
| 25 | During | M817 Dump Truck | **NOTE**<br>If mission does not involve dumping or spreading, vehicle will not be deadlined for particular maintenance checks. | |
| | | | **a.** Operate dump hoist control lever (5) through raising (a), holding (b), and lowering (c) positions to check performance. | **a.** Dump hoist inoperative. |
| | | | 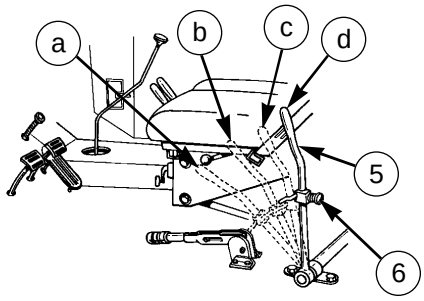 | |
| | | | **b.** Ensure lock (6) on control lever (5) holds control (5) in neutral position (d). | **b.** Control lever lock is missing or inoperative |

*Table 2-2. Preventive Maintenance Checks and Services (Cont'd).*

| ITEM NO. | INTERVAL | LOCATION<br>ITEM TO CHECK/ SERVICE | CREWMEMBER<br>PROCEDURE | NOT FULLY MISSION CAPABLE IF: |
|---|---|---|---|---|
| 26 | During | Engine Coolant Heater | DRIVER<br>**WARNING**<br>Do not operate heater if exhaust leakage is noted. Exhaust gases can kill. | |
| | | | **a.** Check for exhaust leakage while operating heaters. | **a.** Any exhaust leakage. |
| | | | **b.** Listen for unusual heater noises during operation. | **b.** Unusual noise is evident. |
| 27 | During | Wrecker Rear Winch | DRIVER<br>**WARNING**<br>Wear hand protection when handling winch cable. Do not handle cable with bare hands. Broken wires will cause injury. | |
| | | | **a.** While operating wrecker rear winch, inspect cable for kinks, breaks, and frayed wire. | **a.** Cable frayed, kinked, or broken. |
| | | | 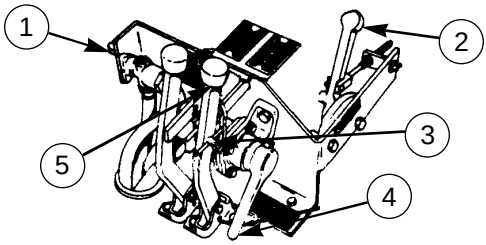 | |
| | | | **b.** While operating rear winch, check all controls for proper operation. They are: cable tensioner valve (1), throttle control lever (2), winch shift control (5), clutch control lever (4), and shift lever lockpin (3). | **b.** Controls are inoperative. |
| | | | **c.** Inspect hose assemblies for leaks. | **c.** Any class III leak is evident. |
| 28 | During | Van Hydraulic Liftgate | DRIVER<br>Operate hydraulic liftgate (6) through full range of movement. Use electric switch (9) inside van, and PTO controls (7) and (8), on rear of van. | No control response. Any class III leak is evident. |

*Table 2-2. Preventive Maintenance Checks and Services (Cont'd).*

| ITEM NO. | INTERVAL | LOCATION / ITEM TO CHECK/ SERVICE | CREWMEMBER PROCEDURE | NOT FULLY MISSION CAPABLE IF: |
|---|---|---|---|---|
| | | | 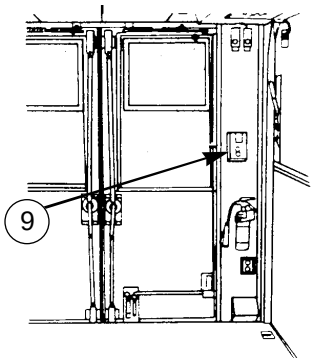  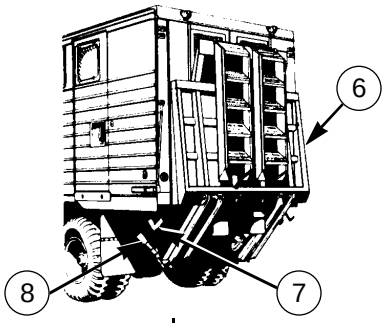  | |
| 29 | During | Bridge Transporting Stake Truck (M821) | DRIVER<br>**WARNING**<br>Wear hand protection when handling winch cable. Do not handle cable with bare hands. Broken wires will cause injury.<br>**a.** While loading or unloading, operate and inspect loading roller (11), ratchet wheel (13), and winches (12) to determine performance.<br>**b.** Inspect floodlights (10), connections, and mountings to determine if all are in operable condition.<br> 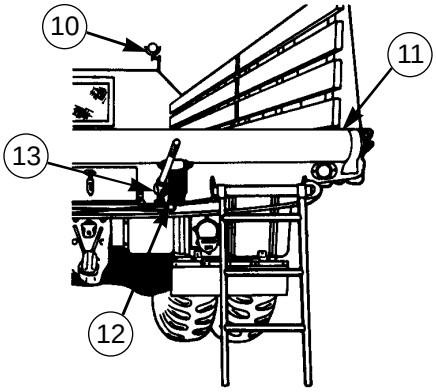  | **a.** Cable is broken or winch or roller damaged. |

*Table 2-2. Preventive Maintenance Checks and Services (Cont'd).*

| ITEM NO. | INTERVAL | LOCATION<br>ITEM TO CHECK/ SERVICE | CREWMEMBER<br>PROCEDURE | NOT FULLY MISSION CAPABLE IF: |
|---|---|---|---|---|
| | | | DRIVER<br>**WARNING**<br>Wear hand protection when handling winch cable. Do not handle cable with bare hands. Broken wires will cause injuries. | |
| 30 | During | Front Winch | **a.** Check winch hoses and lines for deterioration, leakage, and secure connections.<br>**b.** With engine running, operate front winch, check that drum lock knob (2) and drum clutch lever (1) operate properly. Also, check that winch grab brake stops drum from revolving as soon as cable pull is stopped.<br> 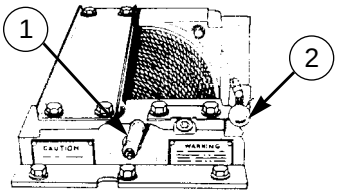 <br> | **a.** Any class III leak is evident.<br>**b.** Vehicle is not ready/available if mission requires winching operation and winch is inoperable. M816 will be ready/ available only if rear winch can be used. Notify unit maintenance if front winch cannot be operated properly. |
| | | | **INTERIOR OFVEHICLE**<br>DRIVER<br>**NOTE**<br>Missing, torn, or inoperative seatbelt may be in violation of AR 385-55. | |
| 31 | After | Seat and Seatbelts | **a.** Check driver's (4) and companion (3) seats for security of mounting. | |

*Table 2-2. Preventive Maintenance Checks and Services (Cont'd).*

| ITEM NO. | INTERVAL | LOCATION<br>ITEM TO CHECK/ SERVICE | CREWMEMBER<br>PROCEDURE | NOT FULLY MISSION CAPABLE IF: |
|---|---|---|---|---|
| 31 (Cont'd) | After | Seat and Seatbelts | **b.** Check seatbelts for:<br>1. Proper adjustment.<br>2. Ability to lock.<br>3. Security of mounting hardware (5).<br>4. Belt material (6) for rips and tears. | |
| | | | 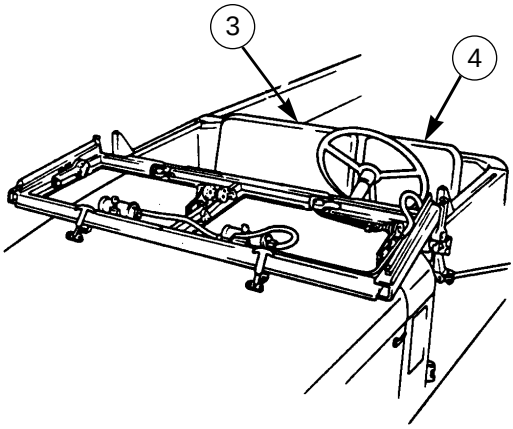 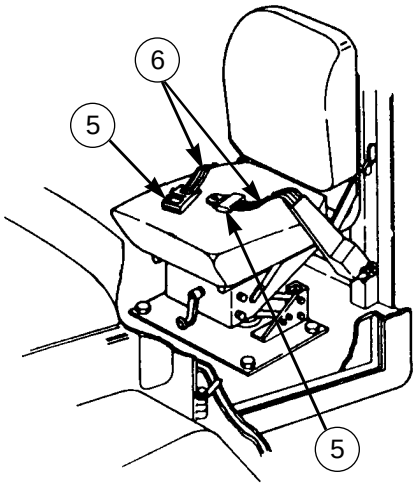 | |
| | | | DRIVER<br>**NOTE**<br>Operation of vehicles with inoperative horn may violate AR 385-55. | |
| 32 | After | Horns | Check operation of horn if tactical situation permits.<br>DRIVER<br>**NOTE**<br>Operation of vehicle with inoperative lights may violate AR 385-55. | |
| 33 | After | Lights | Check operation of headlights, taillights, turn signals, brake, and blackout lights.<br>DRIVER | |
| 34 | After | Mirrors | Check for missing or cracked mirrors. | |

*Table 2-2. Preventive Maintenance Checks and Services (Cont'd).*

| ITEM NO. | INTERVAL | LOCATION<br>ITEM TO CHECK/ SERVICE | CREWMEMBER<br>PROCEDURE | NOT FULLY MISSION CAPABLE IF: |
|---|---|---|---|---|
| 35 | After | Brake System | DRIVER<br>With the air system fully charged at 120 psi (827 kPa), engine off, and parking brake applied:<br>**a.** Visually check air reservoirs for obvious damage (para. 3-12).<br>**b.** Visually check hoses and lines for cracks, breaks, etc. (para. 3-12). | **a.** Any reservoir leak.<br>**b.** Any line or hose is leaking. |
| | | | **UNDERHOOD CHECKS**<br>DRIVER<br>**WARNING**<br>• Stop engine (para. 2-16). Failure to do so may result in injury or death.<br>• Compressed air source will not exceed 30 psi (207 k Pa). When cleaning with compressed air, eyeshields must be worn. Failure to do so may result in injury to personnel.<br>**NOTE**<br>Raise and secure hood to complete the following checks (para. 2-19). | |
| 36 | After | CV Boot | DRIVER<br>Check CV boot for leaks or tears. Failed boots may be repacked with grease until repair can be made by unit maintenance. | |
| 37 | After | Cooling System | DRIVER<br>**a.** Visually check radiator for obvious coolant leakage, damaged or leaking hoses, or damaged mounting brackets.<br>**b.** Check radiator fins for obstructions. Blow out all such obstructions with compressed air. | **a.** Any class III leak is evident or damaged mounting brackets are evident. |

*Table 2-2. Preventive Maintenance Checks and Services (Cont'd).*

| ITEM NO. | INTERVAL | LOCATION<br>ITEM TO CHECK/ SERVICE | CREWMEMBER<br>PROCEDURE | NOT FULLY MISSION CAPABLE IF: |
|---|---|---|---|---|
| 37 (Cont'd) | After | Cooling System | **c.** Check alternator (4), fan (3), power steering pump (2), and water pump (1) drivebelts for cracking, fraying, obvious looseness, and breaks.<br> 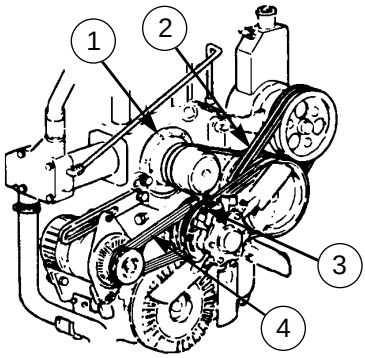 <br> | **c.** Any drivebelt is missing, broken, cracked to the belt fiber, has more than one crack 1/8 in. (.32 cm) in depth or 50% of belt thickness, or has frays more than 2 in. (5.1 cm) long. |
| | | | **d.** Check water pump for any obvious coolant leakage or damage. | **d.** Any class III leak is evident or damage is evident. |
| | | | **e.** Check pulleys for cracks and damage.<br><br>DRIVER<br><br>**WARNING**<br>• Extreme care should be taken when removing surge tank filler cap if temperature gauge reads above 195°F (91°C). Steam or hot coolant under pressure will cause injury.<br>• Accidental or intentional introduction of liquid contaminants into the environment is in violation of state, federal, and military regulations. Refer to Lubrication Order (para. 3-4) for information concerning storage, use, and disposal of these liquids. Failure to do so may result in injury or death.<br>**NOTE**<br>Surge tank should be approximately half full. | **e.** Any pulley is cracked or damaged. |

*Table 2-2. Preventive Maintenance Checks and Services (Cont'd).*

| ITEM NO. | INTERVAL | LOCATION<br>ITEM TO CHECK/ SERVICE | CREWMEMBER PROCEDURE | NOT FULLY MISSION CAPABLE IF: |
|---|---|---|---|---|
| 38 | After | Surge Tank | DRIVER<br>Check coolant level in surge tank (2). Tank should be filled to approximately bottom end of fill tube (1) before operation. Fill if necessary.<br> 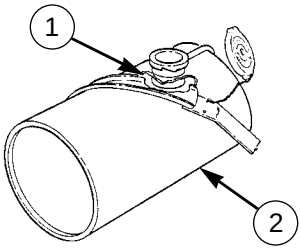 <br> | |

| LUBRICANTS | EXPECTED TEMPERATURES | | |
|---|---|---|---|
| | Above 15°F (Above -9°C) | +40 TO -15°F (+4 TO -26°C) | +40 TO -65°F (+4 TO -54°C) |
| OE/HDO 10 | OE/HDO 10 | OE/HDO 10 | OE/HDO 10 |

| | | | | |
|---|---|---|---|---|
| 39 | After | Engine Oil Level | DRIVER<br>**WARNING**<br>Accidental or intentional introduction of liquid contaminants into the environment is in violation of state, federal, and military regulations. Refer to Lubrication Order (para. 3-4) for information concerning storage, use, and disposal of these liquids. Failure to do so may result in injury or death.<br>**CAUTION**<br>Do not overfill. Damage to internal engine components will result.<br>**NOTE**<br>Engine oil level is checked after engine is stopped and dipstick is removed and wiped clean.<br>Withdraw dipstick (3) slowly to ensure an accurate reading. Check for proper oil level. Level should be between L (low) and H (high) marks. Add oil as necessary (LO 9-2320-260-12). | Engine is overfilled. |

*Table 2-2. Preventive Maintenance Checks and Services (Cont'd).*

| ITEM NO. | INTERVAL | LOCATION / ITEM TO CHECK/ SERVICE | CREWMEMBER PROCEDURE | NOT FULLY MISSION CAPABLE IF: |
|---|---|---|---|---|
| | | | DRIVER | |
| 40 | After | Oil Filter | Check oil filter for obvious signs of leakage. | Any class III leak is evident. |
| | | | DRIVER | |
| 41 | After | Powertrain | Check for oil leakage or damage (para. 2-10). | Any class III leak is evident. |
| | | | DRIVER | |
| 42 | After | Power Steering Assist Cylinder | Check fluid lines of power steering assist cylinder (4) for damage, leaks, and looseness. | Any cuts, breaks, or any class III leak is evident. |

*Table 2-2. Preventive Maintenance Checks and Services (Cont'd).*

| ITEM NO. | INTERVAL | LOCATION<br>ITEM TO CHECK/ SERVICE | CREWMEMBER<br>PROCEDURE | NOT FULLY MISSION CAPABLE IF: |
|---|---|---|---|---|
| | | | **EXTERIOR OFVEHICLE**<br>DRIVER<br>**WARNING**<br>Do not touch hot exhaust pipes with bare hands. Severe burns will result. | |
| 43 | After | Exhaust System | Start engine (para. 2-12), and after system has warmed up, open access cover (2), visually check exhaust manifold (3), muffler (4), and exhaust pipe (1) for leaks, loose clamps, and damaged gaskets. | Pipe, clamps, or hardware missing or damaged, and any leak which could cause injury to personnel. |

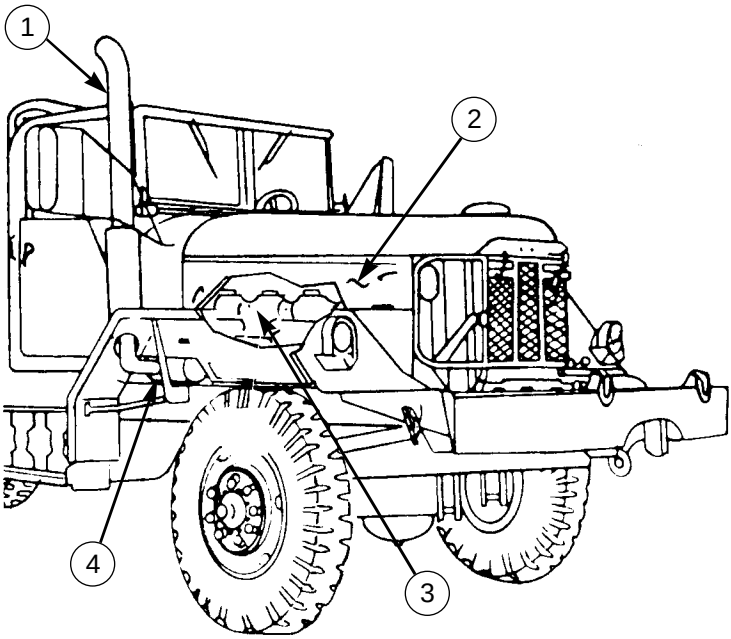

*Table 2-2. Preventive Maintenance Checks and Services (Cont'd).*

| ITEM NO. | INTERVAL | LOCATION<br>ITEM TO CHECK/ SERVICE | CREWMEMBER<br>PROCEDURE | NOT FULLY MISSION CAPABLE IF: |
|---|---|---|---|---|
| | | | DRIVER<br>**NOTE**<br>Lower hood to complete the following checks (para. 2-19). | |
| 44 | After | Right Side Tires | Visually check tires (5) for underinflation (para. 3-16), cracks, gouges, or bulges. Remove all penetrating objects | Vehicles with dual rear tires have two or more missing or unserviceable tires. Vehicles with super singles have any missing or unserviceable tires. |
| 45 | After | Wheel Studs and Nuts | DRIVER<br>Ensure all wheel stud nuts (6) are tight using wheel stud nut wrench (7) and handle (8) (para. 3-15). | Any wheel stud or stud nuts are missing, loose, or damaged. |
| | | | DRIVER<br>**CAUTION**<br>Dual fuel tanks that remain unused may become contaminated with fungus. | Dual tank is contaminated. |
| 46 | After | Fuel Tank (Right Side) | Check fuel tank, lines, and fittings for leakage. | Any class III leak is evident. |

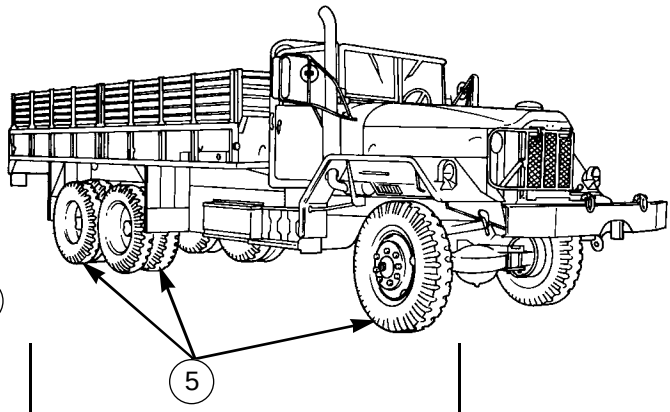


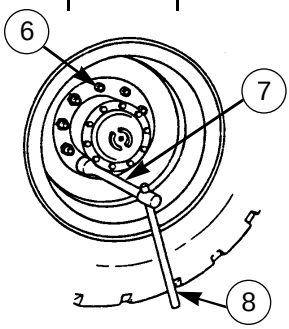

*Table 2-2. Preventive Maintenance Checks and Services (Cont'd).*

| ITEM NO. | INTERVAL | LOCATION<br>ITEM TO CHECK/ SERVICE | CREWMEMBER<br>PROCEDURE | NOT FULLY MISSION CAPABLE IF: |
|---|---|---|---|---|
| | | | DRIVER<br>**NOTE**<br>If mission does not involve carrying troop personnel, vehicle will not be deadlined for these particular maintenance checks. | |
| 47 | After | Cargo Bed | **a.** Check condition of troop seat (4) and retainer pins (3). | **a.** Troop seat retainer pins missing or damaged. |
| | | | **b.** Check condition of troop seat latches (1). | **b.** Latches damaged or missing. |
| | | | **c.** Check troop safety strap (2). | **c.** Safety strap missing. |

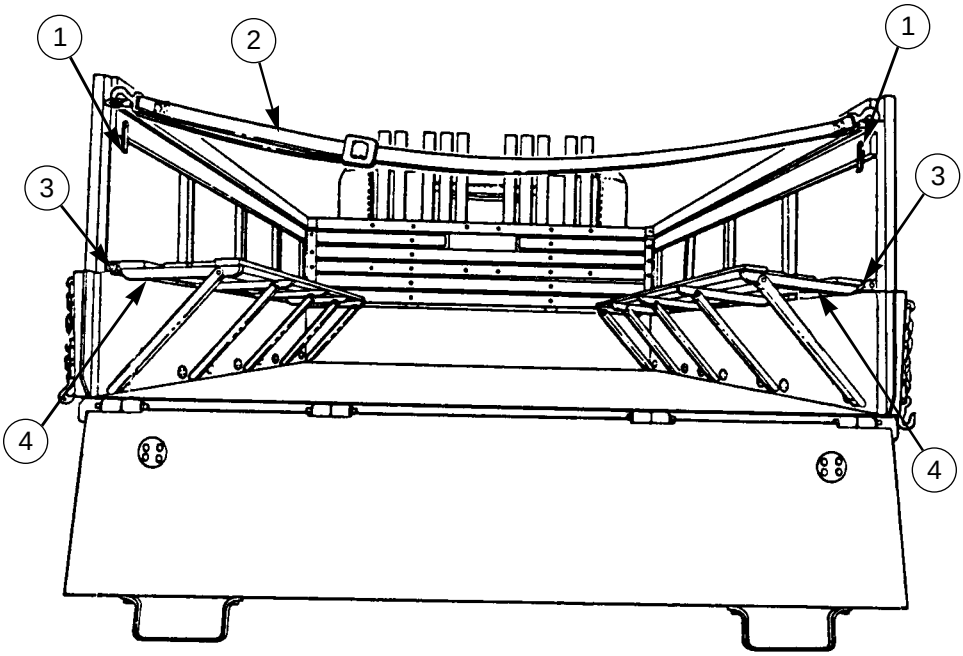

*Table 2-2. Preventive Maintenance Checks and Services (Cont'd).*

| ITEM NO. | INTERVAL | LOCATION<br>ITEM TO CHECK/ SERVICE | CREWMEMBER<br>PROCEDURE | NOT FULLY MISSION CAPABLE IF: |
|---|---|---|---|---|
| | | | DRIVER<br>**NOTE**<br>Van must be set up to perform the following check (para. 2-29). | |
| 48 | After | Expansible Vans | Operate all switches in both AC and DC electrical systems to determine all function properly and power to ceiling lights (5) is on. Turn on ceiling light switch #14 in switch box (6). | Neither AC or DC system will operate. |

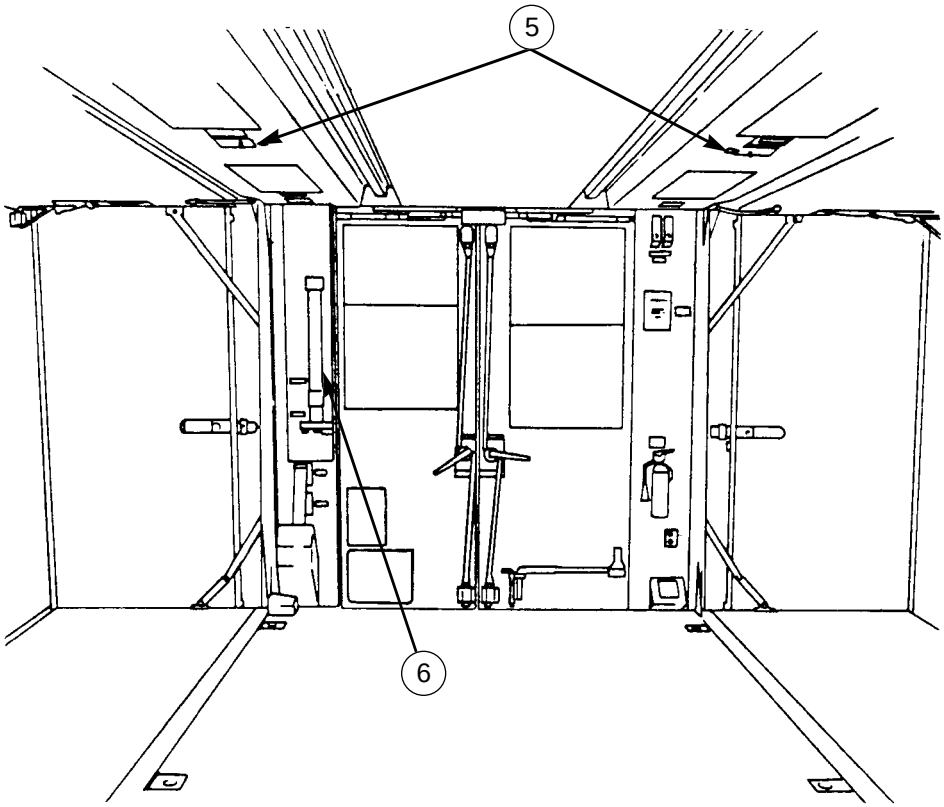

*Table 2-2. Preventive Maintenance Checks and Services (Cont'd).*

| ITEM NO. | INTERVAL | LOCATION<br>ITEM TO CHECK/ SERVICE | CREWMEMBER<br>PROCEDURE | NOT FULLY MISSION CAPABLE IF: |
|---|---|---|---|---|
| | | | DRIVER<br>**WARNING**<br>Never perform PMCS checks under raised dump body unless safety braces are properly positioned. If dump body suddenly lowers, serious injury or death will result.<br>**NOTE**<br>Hydraulic hoist reference applies only to M817 model vehicles. | |
| 49 | After | Hydraulic Hoist | **a.** Check PTO, drive shaft, hydraulic pump, and control valve for damage, leakage, and security of mounting. | **a.** Any class III leak is evident. |
| | | | **b.** Inspect cylinders (1) for damage, leakage, and secure mounting to subframe. | **b.** Any class III leak is evident. |
| | | | **c.** Check roller arm assembly (2) for cracks, breaks, damage, and security of mountings. | **c.** Any evidence of cracks, breaks, damage, or loose mountings. |
| | | | 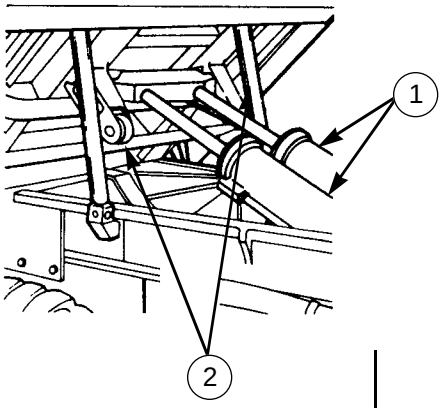 | |
| | | | **d.** Stop engine (para. 2-16). | |

*Table 2-2. Preventive Maintenance Checks and Services (Cont'd).*

| ITEM NO. | INTERVAL | LOCATION<br>ITEM TO CHECK/ SERVICE | CREWMEMBER<br>PROCEDURE | NOT FULLY MISSION CAPABLE IF: |
|---|---|---|---|---|
| | | | DRIVER<br>**CAUTION**<br>• Before opening reservoir, ensure area around the reservoir cap is clean. Do not allow dirt, dust, or water to enter reservoir. Failure to do so will cause damage to internal components.<br>• Do not overfill hydraulic oil reservoir. Damage to internal components will result. | |
| 50 | After | Wrecker Crane | Check hydraulic oil level with dipstick in filler cap (3). Oil level should be at FULL mark. If low, add as necessary (LO 9-2320-260-12).<br> 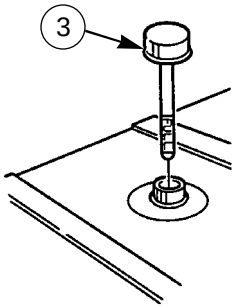 <br> | Any class III leak is evident. |
| | | | DRIVER | |
| 51 | After | Van Hydraulic Liftgate | Check hydrayulic reservoir level by removing filler cap (4) and pulling out dipstick (5). Oil level should be at the third mark from top of gauge, with liftgate up in traveling position.<br>If oil level is low, fill to top line (LO 9-2320-260-12). After check, ensure engine filter cap (4) is tight.<br> 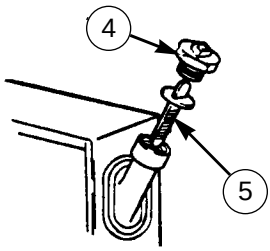 <br> | Any class III leak is evident or cap missing. |

*Table 2-2. Preventive Maintenance Checks and Services (Cont'd).*

| ITEM NO. | INTERVAL | LOCATION<br>ITEM TO CHECK/ SERVICE | CREWMEMBER<br>PROCEDURE | NOT FULLY MISSION CAPABLE IF: |
|---|---|---|---|---|
| | | | DRIVER | |
| 52 | After | Left Side Tires | Visually check tires (1) for under-inflation (para. 3-16), cracks, gouges, or bulges. Remove all penetrating objects. | Vehicles with dual rear tires have two or more missing or unserviceable tires. Vehicles with super singles have any missing or unserviceable tires. |
| | | | DRIVER | |
| 53 | After | Wheel Studs and Nuts | Ensure all wheel stud nuts (2) are tight using wheel stud nut wrench (3) and handle (4) (para. 3-15). | Any wheel stud or stud nut is missing, loose, or damaged. |

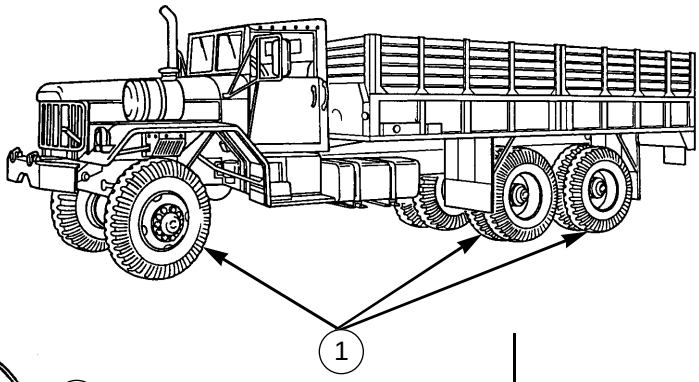


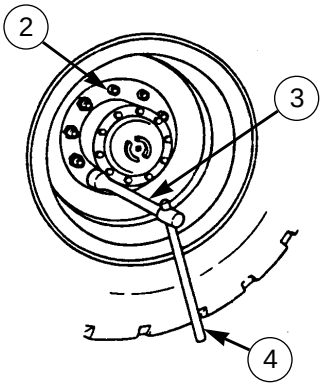

*Table 2-2. Preventive Maintenance Checks and Services (Cont'd).*

| ITEM NO. | INTERVAL | LOCATION<br>ITEM TO CHECK/ SERVICE | CREWMEMBER<br>PROCEDURE | NOT FULLY MISSION CAPABLE IF: |
|---|---|---|---|---|
| | | | DRIVER | |
| 54 | After | Fuel Tank (Left Side) | Check fuel tank, lines, and fittings for leakage. | Any class III leak is evident. |
| | | | DRIVER | |
| 55 | After | Air Tank Drain | **a.** Open drainvalve (6) and drain moisture from air reservoirs. (Drainvalve for both reservoirs is under the left running board (5).) | **NOTE**<br>• Any oil contamination is found when tanks are drained. Notify unit maintenance for determination of vehicle mission capability.<br>• Any reservoir line or hose missing or leaking, or damaged brake supports. |
| | | | 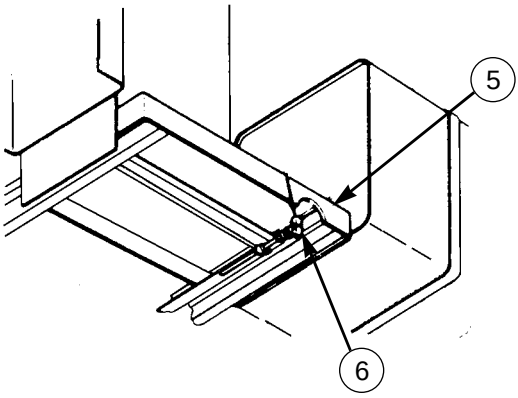 | |
| | | | **b.** Ensure drainvalve (6) is tightly closed. | |

*Table 2-2. Preventive Maintenance Checks and Services (Cont'd).*

| ITEM NO. | INTERVAL | LOCATION<br>ITEM TO CHECK/ SERVICE | CREWMEMBER PROCEDURE | NOT FULLY MISSION CAPABLE IF: |
|---|---|---|---|---|
| | | | DRIVER<br>**WARNING**<br>• Do not perform fuel filter/water separator checks, inspections, or draining while smoking or near fire, flames, or sparks. Fuel could ignite, causing damage to vehicle, or injury or death.<br>• Accidental or intentional introduction of liquid contaminants into the environment is in violation of state, federal, and military regulations. Refer to Lubrication Order (para. 3-4) for information concerning storage, use, and disposal of these liquids. Failure to do so may result in injury or death.<br>**CAUTION**<br>Do not overtighten plastic valve. Damaged valve will result in fuel leaks.<br>**NOTE**<br>If fuel is still not clear after draining one pint (0.473 L), notify unit maintenance. | |
| 56 | After | Fuel Filter/ Water Separator | **a.** Loosen valve (1) on bottom of fuel filter and allow water to drain into a suitable container. Close valve when clean fuel is visible.<br>**b.** Prime fuel system (para. 3-11).<br>**c.** Check for leaks.<br> 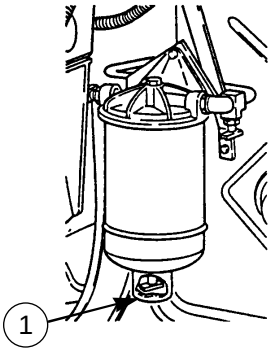 <br> | **c.** Any class III leak is evident. |

*Table 2-2. Preventive Maintenance Checks and Services (Cont'd).*

| ITEM NO. | INTERVAL | LOCATION<br>ITEM TO CHECK/ SERVICE | CREWMEMBER<br>PROCEDURE | NOT FULLY MISSION CAPABLE IF: |
|---|---|---|---|---|
| | | | DRIVER<br>**WARNING**<br>If NBC exposure is suspected, all air filter media should be handled by personnel wearing protective equipment. Consult your unit NBC officer or NBC NCO for appropriate handling or disposal instructions. | |
| 57 | After | Air Intake System | **a.** Check clamps (2) for tightness and upper hump hose (3), tube (4), elbow (5), and air cleaner assembly (6) for openings which would allow foreign material to enter engine. | **a.** Intake system has any obvious leaks. |
| | | | **b.** Check air cleaner assembly (6) for damage which would allow foreign material to enter engine. | **b.** Air cleaner missing or damage that would allow dust or dirt into air intake. |

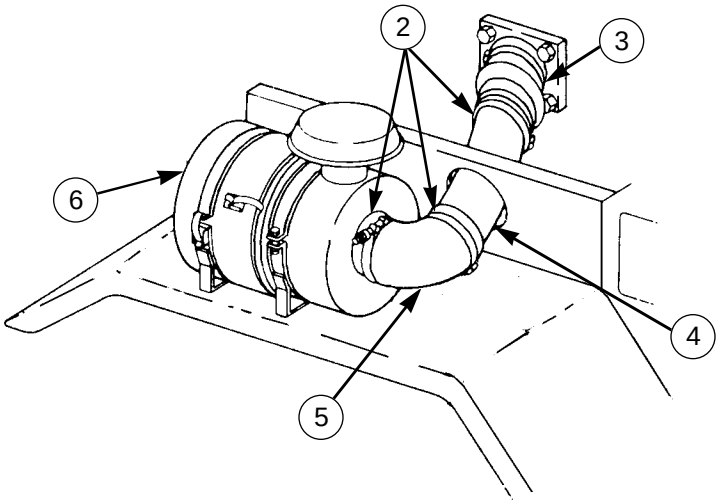

*Table 2-2. Preventive Maintenance Checks and Services (Cont'd).*

| ITEM NO. | INTERVAL | LOCATION<br>ITEM TO CHECK/ SERVICE | CREWMEMBER PROCEDURE | NOT FULLY MISSION CAPABLE IF: |
|---|---|---|---|---|
| | | | **SPECIALBODY EQUIPMENT**<br>DRIVER<br>**CAUTION**<br>Before opening reservoir, ensure area around reservoir filler cap is clean. Do not allow dirt, dust, or water to enter reservoir. Failure to do this will cause damage to internal components.<br>**NOTE**<br>• Hydraulic tank oil level reference applies only to M813/M813A1, M814, and M817 models.<br>• If vehicle has positive locking device, inspect the attaching hardware for loose or missing bolts prior to stowing in up position. If loose or missing, do not stow bed in up position.<br>• Ensure bed is in travel mode before checking oil level. | |
| 58 | After | Hydraulic Tank Oil Level | Check hydraulic reservoir level by removing filler cap (1) and pulling out dipstick (2). Oil level should be at the third mark from top of gauge, with hydraulic components in traveling position. If oil level is low, fill to top line (LO 9-2320-260-12). After check, ensure filter cap (1) is tight.<br> 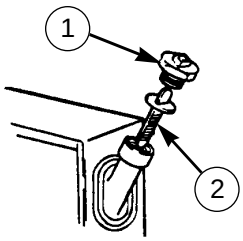 <br> | Any class III leak is evident, or cap missing. |

*Table 2-2. Preventive Maintenance Checks and Services (Cont'd).*

| ITEM NO. | INTERVAL | LOCATION<br>ITEM TO CHECK/ SERVICE | CREWMEMBER PROCEDURE | NOT FULLY MISSION CAPABLE IF: |
|---|---|---|---|---|
| | | | **EXTERIOR OFVEHICLE**<br>DRIVER<br>**WARNING**<br>• Don't smoke, have open flames, or make sparks around the batteries, especially if the caps are off. Batteries can explode and cause injury or death.<br>• Protective clothing, rubber gloves, and eye protection must be worn.<br>• Remove all jewelry such as rings, dog tags, or bracelets. If jewelry or tools contact battery terminal, a direct short may occur, resulting in instant heating, damage to equipment, and injury to personnel. | |
| 59 | Weekly | Batteries | **a.** Remove battery compartment cover (3) for access to batteries. | |
| | | | **b.** Check electrolyte level in battery (4). Electrolyte should be filled to the level/split ring (5) in the battery filler opening (vent). If fluid is low, fill with distilled water to the level ring.<br>If fluid is gassing (boiling), notify unit maintenance. | **b.** Battery is cracked, unserviceable, missing, or leaking. Terminals or cables are loose or corroded, or holddowns are not secure. |

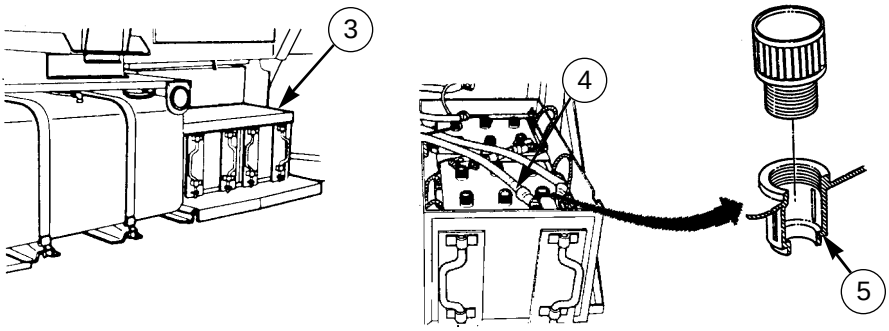

*Table 2-2. Preventive Maintenance Checks and Services (Cont'd).*

| ITEM NO. | INTERVAL | LOCATION<br>ITEM TO CHECK/ SERVICE | CREWMEMBER<br>PROCEDURE | NOT FULLY MISSION CAPABLE IF: |
|---|---|---|---|---|
| 60 | Weekly | Slave Cable Kit | DRIVER<br>**a.** Inspect slave receptacle (2) to ensure cover (1) turns freely and receptacle is not damaged.<br>**b.** Inspect slave receptacle battery cables to ensure connections are clean and tight.<br> 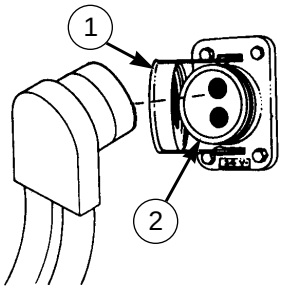 | |
| 61 | Weekly | Tires | DRIVER<br>**a.** Check tire tread depth as per TM 9-2610-201-14.<br>**b.** Check for correct air pressure (para. 3-16). | |

| Vehicle Type (Tire Size) | PRESSURE RATING | | | | | | | |
|---|---|---|---|---|---|---|---|---|
| | FRONT | | | | REAR | | | |
| | Standard (psi) | | Metric (kPa) | | Standard (psi) | | Metric (kPa) | |
| | H | CC | H | CC | H | CC | H | CC |
| **M812A1 (14:00x20)** | **50** | **25** | **344** | **172** | **30** | **25** | **206** | **172** |
| **M813, M813A1, M814, M15, M817, M818, M820, M820A1, M820A2 (11:00x20)** | **80** | **60** | **551** | **413** | **50** | **30** | **344** | **206** |
| **M816 (11:00x20)** | **70** | **60** | **482** | **413** | **70** | **60** | **482** | **413** |
| **M819 (12:00x20) - 16 ply (front)<br>- 14 ply (rear)** | **105** | **80** | **724** | **551** | **65** | **55** | **448** | **379** |
| **M813 (14:00x20) - supersingle** | **55** | **55** | **379** | **379** | **55** | **55** | **379** | **379** |
| **M821 (14:00x20)** | **50** | **40** | **344** | **276** | **30** | **25** | **206** | **172** |
| **All models: Mud, sand, and snow** | **25** | **25** | **172** | **172** | **25** | **25** | **172** | **172** |
| **Spare tire** | ***** | ***** | ***** | ***** | ***** | ***** | ***** | ***** |

***Maximum highway inflation**
**H: Highway CC: Cross-country**

*Table 2-2. Preventive Maintenance Checks and Services (Cont'd).*

| ITEM NO. | INTERVAL | LOCATION<br>ITEM TO CHECK/ SERVICE | CREWMEMBER<br>PROCEDURE | NOT FULLY MISSION CAPABLE IF: |
|---|---|---|---|---|
| 62 | Weekly | Bow Seat, Rack, and Kit | DRIVER<br>Check staves (3), crossbows (4), ropes (5), rear end curtain (6), and tarpaulin (7) for damage (para. 2-41). | |

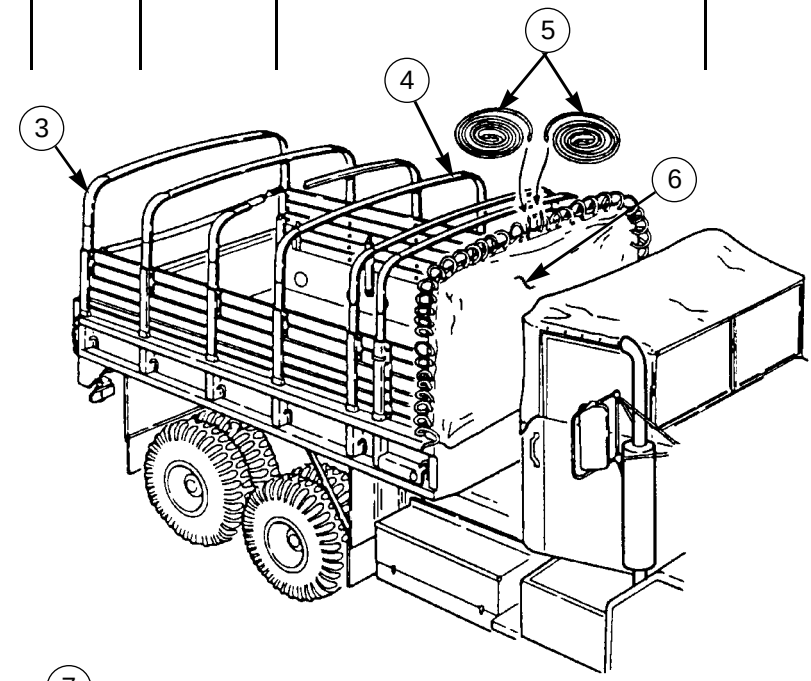


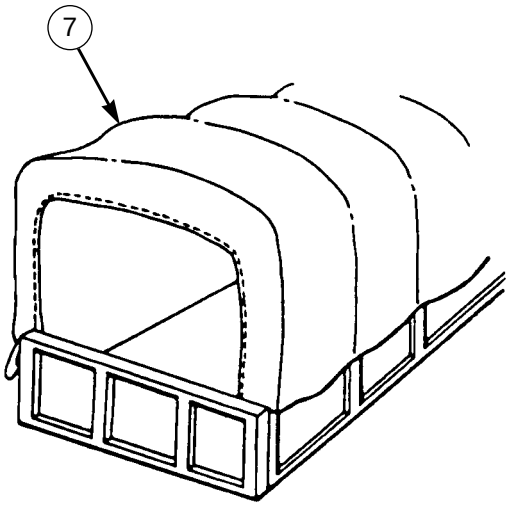

*Table 2-2. Preventive Maintenance Checks and Services (Cont'd).*

| ITEM NO. | INTERVAL | LOCATION<br>ITEM TO CHECK/ SERVICE | CREWMEMBER<br>PROCEDURE | NOT FULLY MISSION CAPABLE IF: |
|---|---|---|---|---|
| 63 | Weekly | Troop Seat Kit | DRIVER<br>Check for broken or splintered side racks (1) and troop seats (2) (para. 2-46). | |
| 64 | Weekly | Body Sides | DRIVER<br>**NOTE**<br>Body sides reference applies only to M813/A1 model vehicles.<br>**a.** Check cargo body sides (7) for damage, broken welds, and rusted-through conditions.<br>**b.** Check cargo body side racks (6) for cracks and breaks.<br>**c.** Check dropside T-bolts (4) for presence and security (M813/A1 model vehicles only).<br>**d.** Check condition of safety strap eyelets (5). | <br><br><br><br><br>**c.** Any T-bolts missing.<br>**d.** Safety strap eyelets are missing or damaged. |

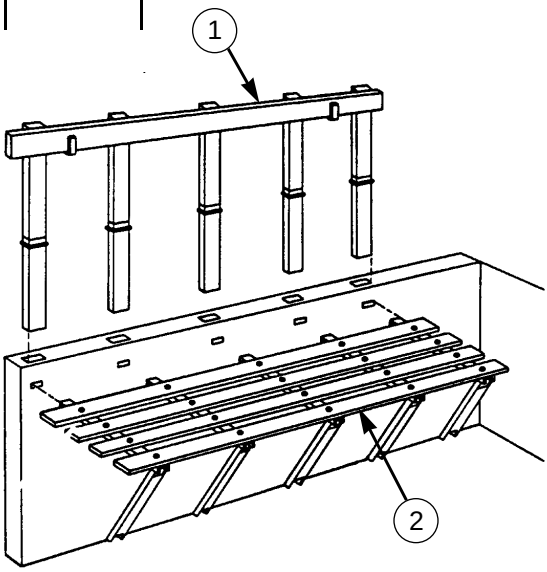

*Table 2-2. Preventive Maintenance Checks and Services (Cont'd).*

| ITEM NO. | INTERVAL | LOCATION<br>ITEM TO CHECK/ SERVICE | CREWMEMBER<br>PROCEDURE | NOT FULLY MISSION CAPABLE IF: |
|---|---|---|---|---|
| 64 (Cont'd) | Weekly | Body Sides | **e.** Check cargo tiedown brackets (8) for presence and damage.<br><br>**f.** Check dropside hinges (9) and pins (3) for presence and damage (M813/A1 model vehicles only). | **e.** Cargo tiedown brackets missing or damaged.<br><br>**f.** Dropside hinges and pins are missing or damaged. |
| | | | 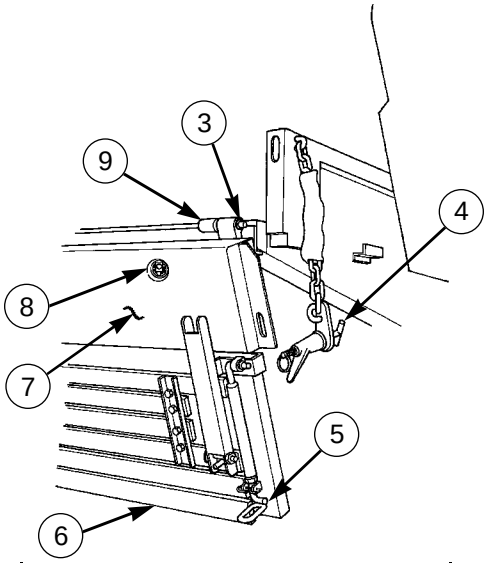 | |
| 65 | Weekly | Tailgate | DRIVER<br>**a.** Inspect tailgate (10) for damage, security, and ease of operation.<br><br>**b.** Check tailgate chains (11) for security, presence, and damage. | **a.** Tailgate is inoperative. |
| | | | 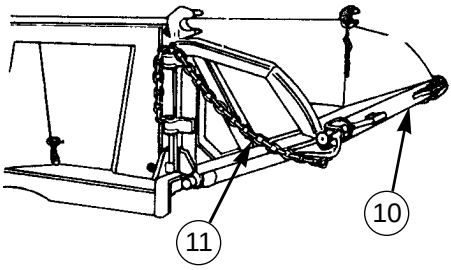 | |

*Table 2-2. Preventive Maintenance Checks and Services (Cont'd).*

| ITEM NO. | INTERVAL | LOCATION<br>ITEM TO CHECK/ SERVICE | CREWMEMBER<br>PROCEDURE | NOT FULLY MISSION CAPABLE IF: |
|---|---|---|---|---|
| 65 (Cont'd) | Weekly | Tailgate | **c.** Check security of latches (5), brackets (2), retaining pins (3), and hinge pins (4) for presence and damage.<br>**d.** Check security of tailgate wings (1) and harness hooks (6) for presence and damage.<br> 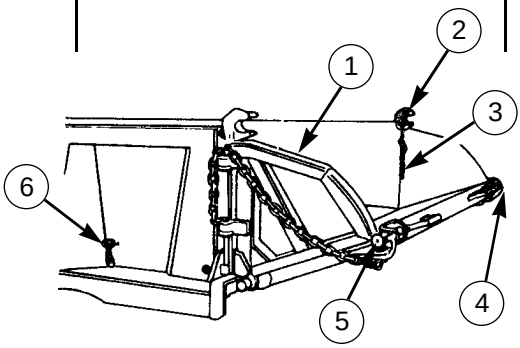 <br><br>DRIVER | |
| 66 | Weekly | Van Body Exterior | **a.** Check for condition and proper function of panels and doors.<br>**b.** Check for presence and condition of ladders, stabilizers, receptacles, and power cables.<br>DRIVER | **a.** Panels or doors do not function properly.<br>**b.** Ladders, stabilizers, receptacles, or power cables are missing. |
| 67 | Weekly | Van Electrical System | **a.** Operate all switches to determine all function properly and ceiling lights illuminate.<br>**b.** Open doors to determine reliability of blackout switches.<br>**c.** Visually check cables and harnesses for breaks or loose connections.<br>DRIVER | **a.** Electrical system will not operate.<br>**b.** Blackout switch is inoperative. |
| 68 | Weekly | Tow Pintle | Check for presence and condition. Ensure safety pin and chain are present. | Safety pin is missing. |

*Table 2-2. Preventive Maintenance Checks and Services (Cont'd).*

| ITEM NO. | INTERVAL | LOCATION<br>ITEM TO CHECK/ SERVICE | CREWMEMBER<br>PROCEDURE | NOT FULLY MISSION CAPABLE IF: |
|---|---|---|---|---|
| 69 | Weekly | Rear Winch and Controls (M816) | DRIVER<br>**a.** Remove oil level plug (7) from winch gearcase. If level is below level, fill to bottom of hole (LO 9-2320-260-12).<br>**b.** Check for secure connections. | **b.** Winch inoperable; mount loose or damaged. M816 will be ready/available only if rear winch can be used. Notify unit maintenance if front winch cannot be operated properly. |

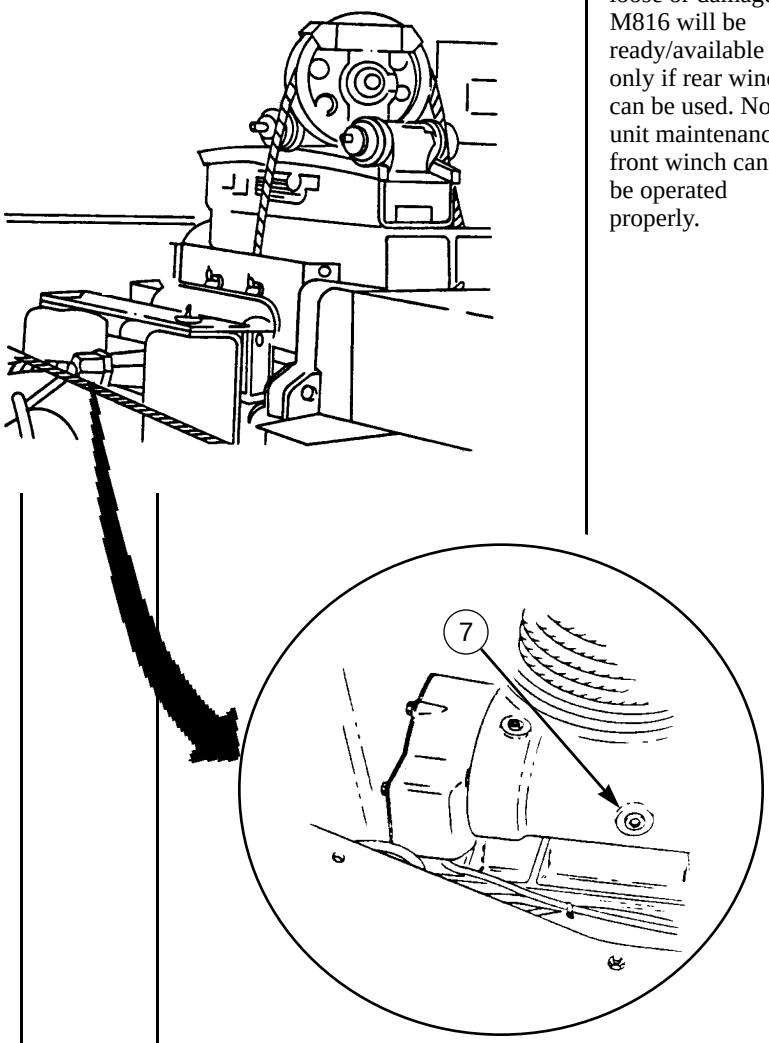

*Table 2-2. Preventive Maintenance Checks and Services (Cont'd).*

| ITEM NO. | INTERVAL | LOCATION<br>ITEM TO CHECK/ SERVICE | CREWMEMBER<br>PROCEDURE | NOT FULLY MISSION CAPABLE IF: |
|---|---|---|---|---|
| | | | DRIVER<br>**CAUTION**<br>• Before opening reservoir, ensure area around reservoir cap is clean. Do not allow dirt, dust, or water to enter reservoir. Failure to do so will cause damage to internal components.<br>• Do not overfill hydraulic oil reservoir. Damage to internal components will result. | |
| 70 | Weekly | Wrecker Crane | **a.** Check PTOs, drive shafts, hydraulic pumps, and control valves for damage, leakage, and security of mounting.<br>**b.** Check hydraulic tank oil level. | Any class III leak is evident or damage is evident. |
| | | | DRIVER | |
| 71 | Weekly | Differentials | Visually inspect rear differentials for oil leaks (para. 2-10). | Any class III leak is evident. |
| | | | DRIVER | |
| 72 | Weekly | Transfer Case and Transmis-sion Bolts | Check all transfer case and transmission bolts for looseness. | Any loose or missing bolts. |
| | | | DRIVER | |
| 73 | Weekly | Underbody Frame | Visually inspect frame side rails, cross-members, and underbody supports for broken bolts, cracks, breaks, broken welds, rivets, and rusted-through conditions. | Any side rail or crossmember is obviously broken; any weld, bolt, or rivet broken or rusted through. |

*Table 2-2. Preventive Maintenance Checks and Services (Cont'd).*

| ITEM NO. | INTERVAL | LOCATION<br>ITEM TO CHECK/ SERVICE | CREWMEMBER<br>PROCEDURE | NOT FULLY MISSION CAPABLE IF: |
|---|---|---|---|---|
| 74 | Weekly | Hot Water Personnel Heater Kit | DRIVER<br>**a.** Check motor switch (3) and air (2) and defroster (1) control handles for proper operation.<br>**b.** Listen for unusual noises during operation.<br>**c.** Check heater hoses and connections for leaks. | **b.** Unusual noise is evident.<br>**c.** Any class III leak is evident. |
| | | | 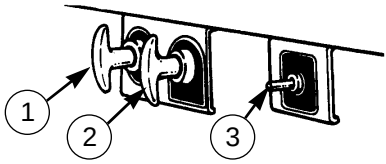 | |
| 75 | Weekly | Rifle Mount Kit | DRIVER<br>**SPECIALPURPOSE KITS**<br>Check stock brace (5) for looseness or damage.<br>Check catch (4) assembly for excessive looseness, binding, or damage. | |
| | | | 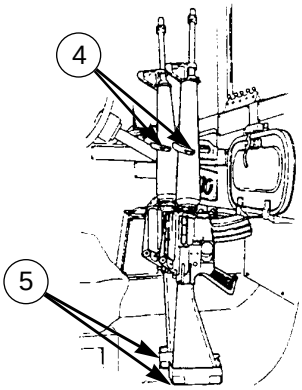 | |
| 76 | Weekly | Machine Gun Mount | DRIVER<br>Check for damage to cab and security of mount and ring (TM 9-1005-245-14). | |
| 77 | Weekly | | DRIVER<br>Machine gun mount. Refer to TM 9-1005-245-14 for preventive maintenance check and services. | |

*Table 2-2. Preventive Maintenance Checks and Services (Cont'd).*

| ITEM NO. | INTERVAL | LOCATION<br>ITEM TO CHECK/ SERVICE | CREWMEMBER<br>PROCEDURE | NOT FULLY MISSION CAPABLE IF: |
|---|---|---|---|---|
| 78 | Weekly | Radiator and Hood Cover Kit | DRIVER<br>Inspect radiator cover flap (2), engine compartment cover (1), and brushguard cover (3). | |
| 79 | Weekly | Steering Column U-joints | **UNDER HOOD CHECKS**<br>DRIVER<br>**NOTE**<br>Open and secure hood (para. 2-19).<br>Check steering column U-joints (4) for excessive wear. | U-joints damaged or missing. |

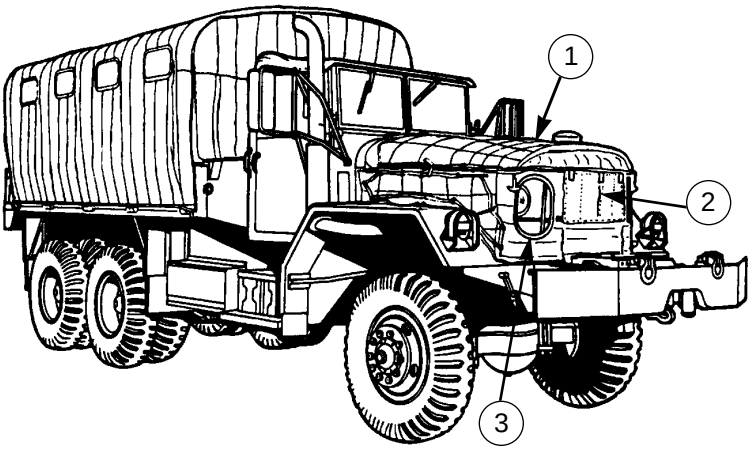


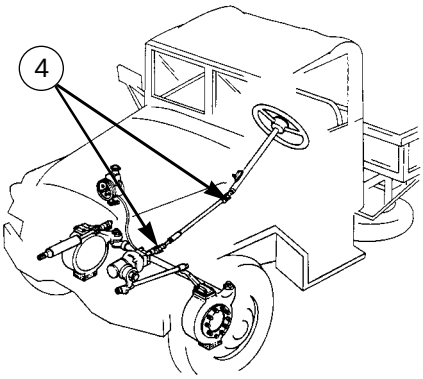

*Table 2-2. Preventive Maintenance Checks and Services (Cont'd).*

| ITEM NO. | INTERVAL | LOCATION<br>ITEM TO CHECK/ SERVICE | CREWMEMBER<br>PROCEDURE | NOT FULLY MISSION CAPABLE IF: |
|---|---|---|---|---|
| | | | DRIVER<br>**WARNING**<br>Stop engine (para. 2-16). Failure to do so may result in injury or death.<br>**NOTE**<br>Ensure primary air pressure gauge on instrument panel reads 120 psi (827 kPa). | |
| 80 | Weekly | Air Compressor | **a.** Check air compressor (5) for air leakage.<br>**b.** Check air lines and fittings for air leakage.<br>**c.** Check for missing or loose bolts and belts. | **a.** Any air leakage is evident.<br>**b.** Any air leakage is evident.<br>**c.** Loose mounting bolts, loose belts, missing belt. |

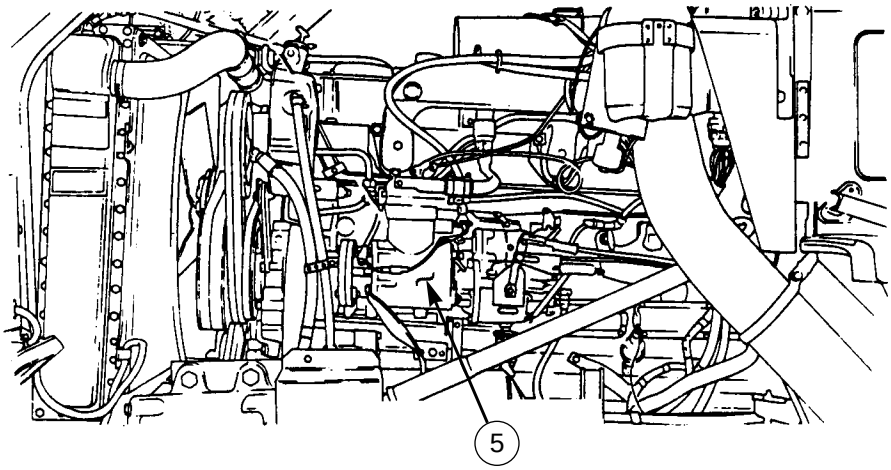

*Table 2-2. Preventive Maintenance Checks and Services (Cont'd).*

| ITEM NO. | INTERVAL | LOCATION<br>ITEM TO CHECK/ SERVICE | CREWMEMBER PROCEDURE | NOT FULLY MISSION CAPABLE IF: |
|---|---|---|---|---|
| LUBRICANTS | | | EXPECTED TEMPERATURES<br>Above 15°F (Above -9°C) / +40 TO -15°F (+4 TO -26°C) | +40 TO -65°F (+4 TO -54°C) |
| OE/HDO 10 | | | OE/HDO 10 / OE/HDO 10 | OE/HDO 10 |
| 81 | Weekly | Steering System | DRIVER<br>**WARNING**<br>Accidental or intentional introduction of liquid contaminants into the environment is in violation of state, federal, and military regulations. Refer to Lubrication Order (para. 3-4) for information concerning storage, use, and disposal of these liquids. Failure to do so may result in injury or death.<br>**CAUTION**<br>• Before opening reservoir, ensure area around reservoir cap is clean. Do not allow dirt, dust, or water to enter reservoir. Failure to do this will cause damage to internal components.<br>• Do not overfill power steering reservoir. Oil will overflow into vent system.<br>**NOTE**<br>Power steering reservoir oil level is checked with engine stopped (para. 3-11).<br>**a.** With engine cold, check power steering reservoir (1) with dipstick (2) on filler cap (3). If fluid is below COLD mark, add as necessary (LO 9-2320-260-12).<br>**b.** If engine is at normal operating temperature, 175-200° F (79-93° C), use HOT FULL mark and add as necessary (LO 9-2320-260-12). | Oil in reservoir is contaminated. |

*Table 2-2. Preventive Maintenance Checks and Services (Cont'd).*

| ITEM NO. | INTERVAL | LOCATION<br>ITEM TO CHECK/ SERVICE | CREWMEMBER<br>PROCEDURE | NOT FULLY MISSION CAPABLE IF: |
|---|---|---|---|---|
| 81 (Cont'd) | Weekly | Steering System | **c.** Visually check for oil leaks (para. 2-10).<br>**d.** Check steering arm for looseness and damage. | **c.** Any class III leak is evident.<br>**d.** Loose or damaged arms. |

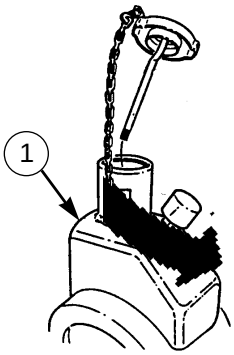


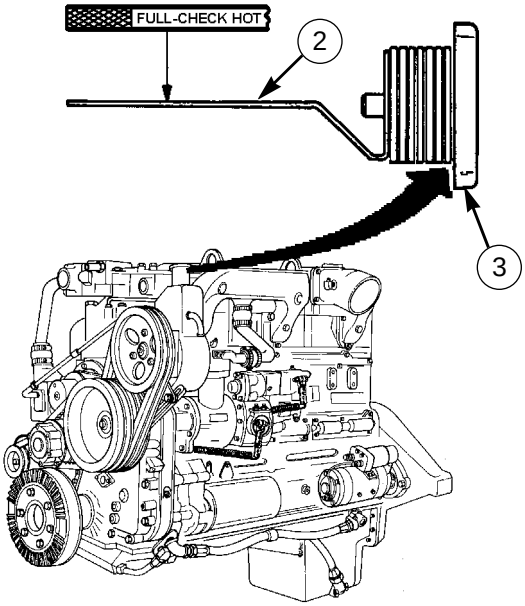

*Table 2-2. Preventive Maintenance Checks and Services (Cont'd).*

| ITEM NO. | INTERVAL | LOCATION<br>ITEM TO CHECK/ SERVICE | CREWMEMBER<br>PROCEDURE | NOT FULLY MISSION CAPABLE IF: |
|---|---|---|---|---|
| | | | DRIVER<br>**ALCOHOLEVAPORATOR [PART OFWINTERIZATION FUEL BURNING PERSONNELHEATER KIT] (IN FREEZING TEMPERA-TURES ONLY)**<br>**WARNING**<br>Alcohol used in alcohol evaporator is flammable, poisonous, and explosive. Do not smoke when adding fluid and do not drink fluid. Failure to do this will result in injury or death.<br>**NOTE**<br>Use alcohol evaporator during freezing weather operations only. | |
| 82 | Weekly | Alcohol Evaporator | **a.** Check fluid level. Fill with alcohol if bottle (1) is less than two-thirds full.<br>**b.** Check bottle (1) for cracks or breaks. | **b.** Bottle is empty. |

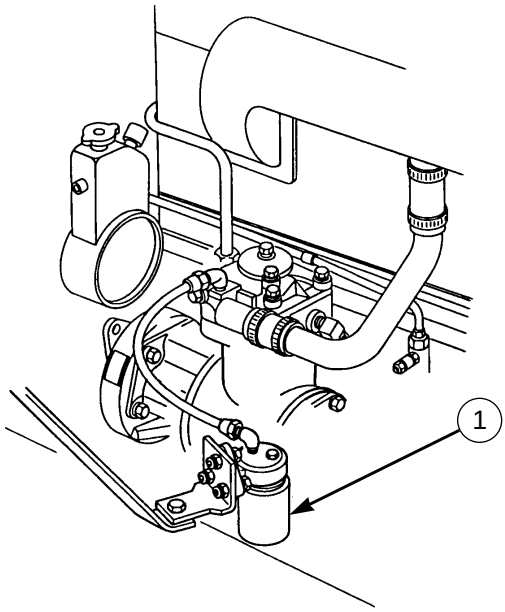

*Table 2-2. Preventive Maintenance Checks and Services (Cont'd).*

| ITEM NO. | INTERVAL | LOCATION<br>ITEM TO CHECK/ SERVICE | CREWMEMBER<br>PROCEDURE | NOT FULLY MISSION CAPABLE IF: |
|---|---|---|---|---|
| 83 | Weekly | Arctic Winterization Kits | DRIVER<br>**a.** Check fuel burning personnel and engine heater air intake and exhaust tubes for damage, obstructions, and leakage (para. 2-43).<br>**b.** Ensure both engine coolant heater shutoff valves (2) are open.<br>**c.** Check fuel burning and engine coolant heater controls by depressing indicator lamps to ensure they illuminate (para. 2-43).<br>**d.** Ensure coolant is at proper level in surge tank (3). Tank should be filled to approximately bottom end of fill tube. | **a.** Any exhaust leakage or any class III leak is evident. |

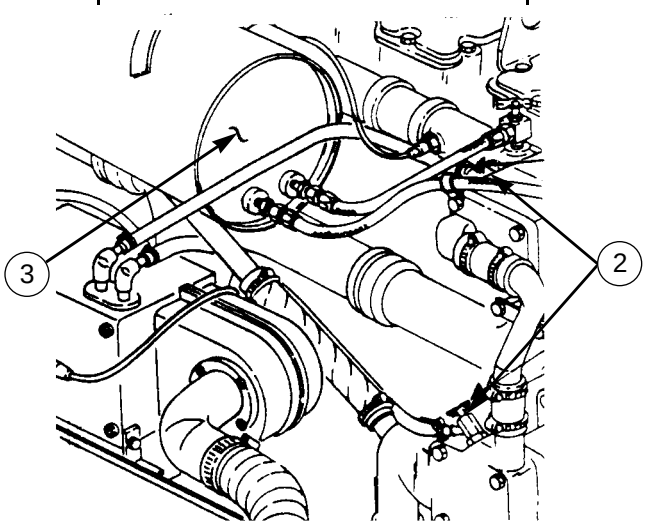

*Table 2-2. Preventive Maintenance Checks and Services (Cont'd).*

| ITEM NO. | INTERVAL | LOCATION<br>ITEM TO CHECK/ SERVICE | CREWMEMBER<br>PROCEDURE | NOT FULLY MISSION CAPABLE IF: |
|---|---|---|---|---|
| 84 | Weekly | Windshield Washer Reservoir | DRIVER<br>Check fluid level in reservoir (1). If less than half full, fill with washer fluid.<br> 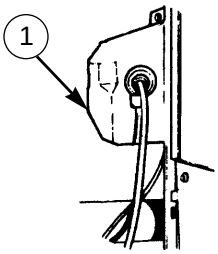 <br><br>**EXTERIOR OFVEHICLE**<br>**NOTE**<br>Lower hood at this time to complete the following checks (para. 2-19). | |
| 85 | Weekly | M815 Bolster Truck | DRIVER<br>Inspect bolster (2), sliding chocks (3), bolster locks (4), stanchions, chains, and kingpin for bends, breaks, and loose or missing parts. | Bolster, sliding chocks, bolster locks, stanchions, chains, or kingpin broken, bent, loose, or missing. |

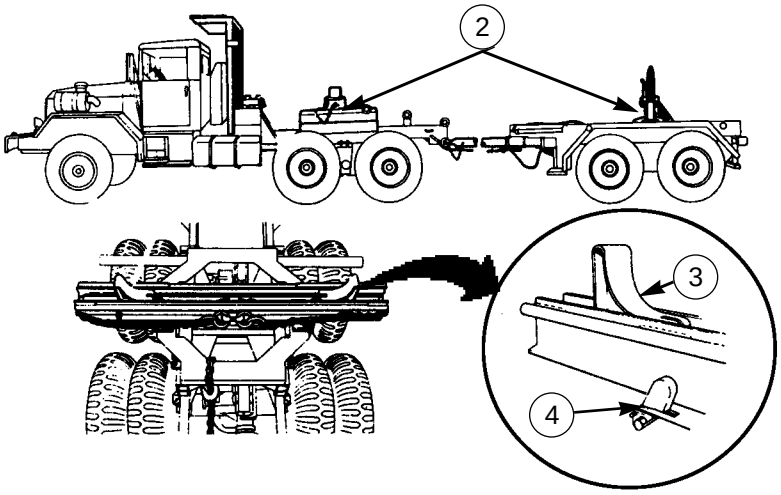

*Table 2-2. Preventive Maintenance Checks and Services (Cont'd).*

| ITEM NO. | INTERVAL | LOCATION<br>ITEM TO CHECK/ SERVICE | CREWMEMBER<br>PROCEDURE | NOT FULLY MISSION CAPABLE IF: |
|---|---|---|---|---|
| | | | DRIVER | |
| 86 | Weekly | M-11 Decontamination Unit | Refer to TM 3-4230-204-12&P for Preventive Maintenance Checks and Services. | |
| | | | DRIVER | |
| 87 | Weekly | Dump Trucks | **a.** Inspect dump body and cab protector for cracks, broken welds, loose or broken bolts, and rusted-through conditions. Ensure all bolts securing cab protector to dump body and secure. | **a.** Cab protector missing. |
| | | | **b.** Check dump body support braces (5) for presence and damage. | **b.** Support braces are bent, broken, or damaged. |

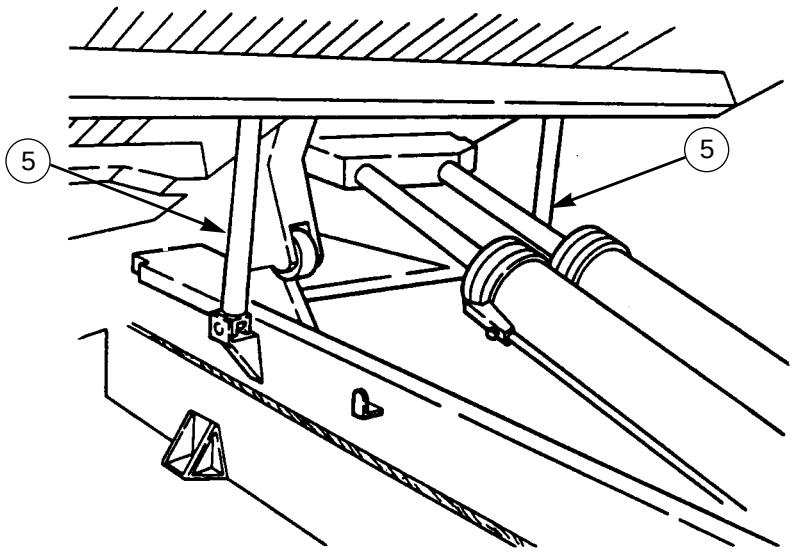

*Table 2-2. Preventive Maintenance Checks and Services (Cont'd).*

| ITEM NO. | INTERVAL | LOCATION<br>ITEM TO CHECK/ SERVICE | CREWMEMBER PROCEDURE | NOT FULLY MISSION CAPABLE IF: |
|---|---|---|---|---|
| | | | DRIVER | |
| 88 | Weekly | Deepwater Fording Kit | **a.** Tighten fuel tank filler cap(s) (para. 2-40). | **a.** Requires deepwater fording kit operation and kit is inoperative. |
| | | | **b.** Ensure all battery filler caps are present and secure (para. 2-40). | |
| | | | **c.** Check operation of control handle. Ensure fording valve open and close (para. 2-40). | **c.** Control handle on fording valve is inoperative. |
| | | | **UNDERHOOD CHECKS** | |
| | | | DRIVER | |
| | | | **NOTE**<br>Open and secure hood (para. 2-19). | |
| | | | **WARNING**<br>If temperature gauge reads above 195°F (91°C), use care when removing surge tank filler cap. Pressurized steam or hot coolant will cause injury to personnel. | |
| 89 | Monthly | Surge Tank | Check all hoses (1) for deterioration and/or leakage. Tighten loose or leaking hose connections. | Any class III leak is evident, or hoses are cut or broken. |

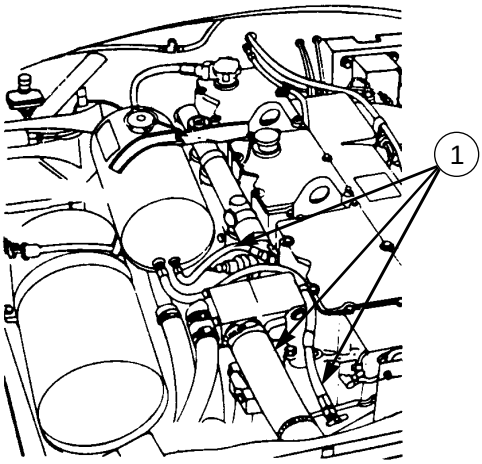

*Table 2-2. Preventive Maintenance Checks and Services (Cont'd).*

| ITEM NO. | INTERVAL | LOCATION<br>ITEM TO CHECK/ SERVICE | CREWMEMBER<br>PROCEDURE | NOT FULLY MISSION CAPABLE IF: |
|---|---|---|---|---|
| | | | DRIVER<br>**CAUTION**<br>Before opening reservoir, ensure area around reservoir cap is clean. Do not allow dirt, dust, or water to enter reservoir to prevent damage to steering system internal components.<br>**NOTE**<br>Power steering reservoir oil level is checked with engine stopped. | |
| 90 | Monthly | Steering System | **a.** Check power steering pump (2) and oil cooler (4) for leakage.<br>**b.** Visually inspect power steering pump hoses (3) for deterioration and leaks. | **a.** Any class III leak is evident.<br>**b.** Any class III leak is evident, or hoses are cut or broken. |

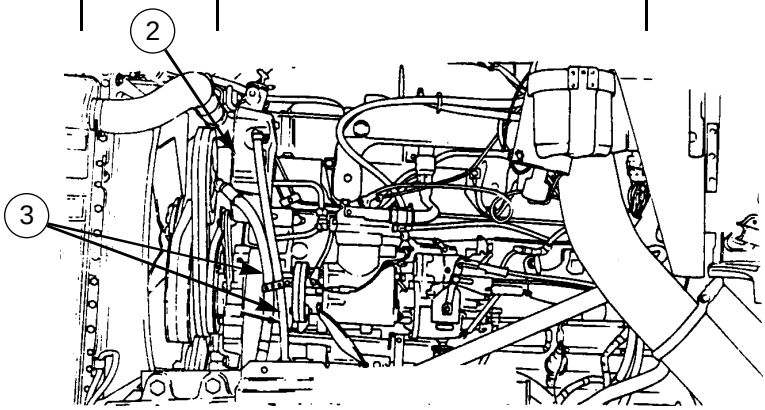


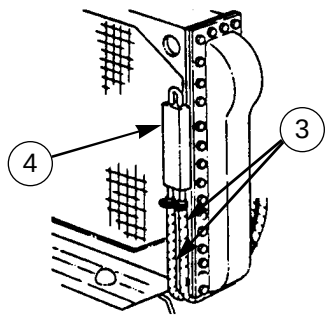

*Table 2-2. Preventive Maintenance Checks and Services (Cont'd).*

| ITEM NO. | INTERVAL | LOCATION<br>ITEM TO CHECK/ SERVICE | CREWMEMBER<br>PROCEDURE | NOT FULLY MISSION CAPABLE IF: |
|---|---|---|---|---|
| | | | **EXTERIOR OFVEHICLE**<br>DRIVER<br>**WARNING**<br>Wear hand protection when handling winch cable. Do not handle cable with bare hands. Broken wires will cause injury.<br>**NOTE**<br>Lower hood at this time to complete the following checks (para. 2-19). | |
| 91 | Monthly | A-frame Kit | Visually inspect A-frame (2) for damage and winch cable (1) for kinks, frays, and breaks.<br> 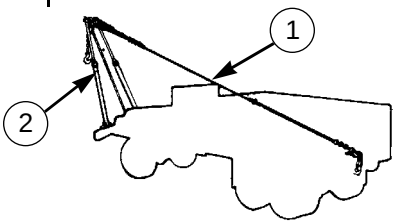 <br> | Cable is frayed or broken. |
| 92 | Monthly | M817 Dump Truck | DRIVER<br>**a.** Inspect dump body (4) and cab protector (3) for dents, cracks, broken welds, loose or broken bolts, and rusted-through conditions. Ensure all bolts securing cab protector to dump truck are tight.<br> 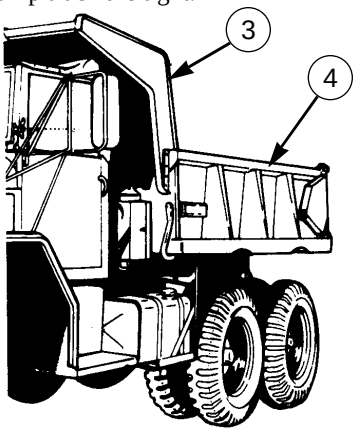 <br> | **a.** Dump body cab protector is missing or not mounted securely. |

*Table 2-2. Preventive Maintenance Checks and Services (Cont'd).*

| ITEM NO. | INTERVAL | LOCATION<br>ITEM TO CHECK/ SERVICE | CREWMEMBER PROCEDURE | NOT FULLY MISSION CAPABLE IF: |
|---|---|---|---|---|
| 92 (Cont'd) | Monthly | M817 Dump Truck | | |
| | | | 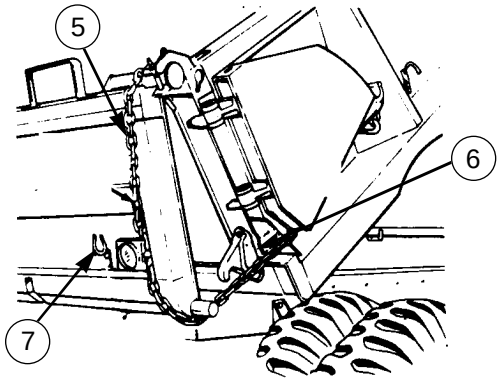 | |
| | | | **b.** Inspect tailgate (12) for damage, security, and ease of movement. Also check condition and security of tailgate chains (5), wings (8), lashing hooks (7) and (13), latches (6), retaining pins (10), hinge pins (11), and brackets (9). | **b.** Tailgate does not work. |
| | | | 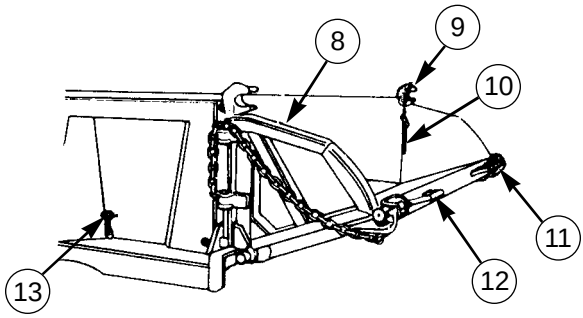 | |

*Table 2-2. Preventive Maintenance Checks and Services (Cont'd).*

| ITEM NO. | INTERVAL | LOCATION<br>ITEM TO CHECK/ SERVICE | CREWMEMBER PROCEDURE | NOT FULLY MISSION CAPABLE IF: |
|---|---|---|---|---|
| 93 | Monthly | Wrecker Boom | DRIVER<br>**a.** Inspect crane cab (1) for damage. | |
| | | | **b.** Check condition of shipper brace assemblies (2), retaining pins (3), hook and block (4), outriggers (6), base plates (5), boom jacks (7), base plates (9), and boom jack tie bar (8). | Shipper brace, retaining pins, hook, or one or more outriggers damaged or missing.<br>Vehicle is not ready/ available for heavy lift mission when boom jacks, base plates, or boom jack tie bars are missing or damaged. |
| | | | **c.** Visually inspect vehicle for condition of ground spades, boom jacks, and other items used in crane operation.<br>**WARNING**<br>Wear hand protection when handling winch cable. Do not handle cable with bare hands. Broken wires will cause injury. | |
| | | | **d.** While operating wrecker boom winch cable, inspect for kinks, breaks, and frayed wires. | Cable is kinked, broken, or has frayed wires. |

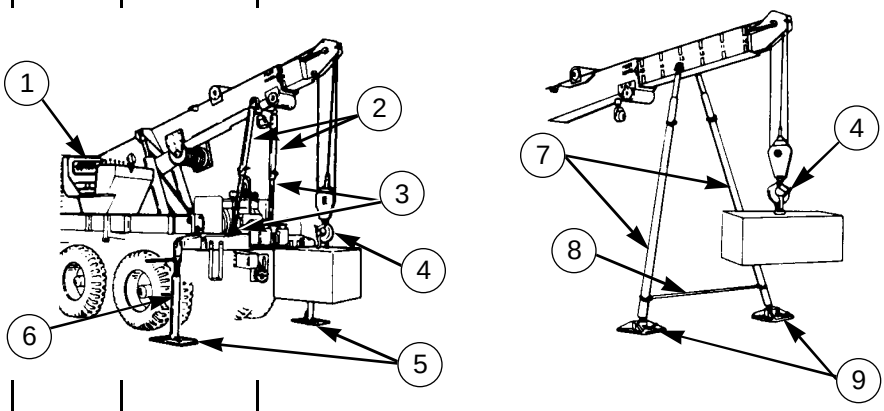

*Table 2-2. Preventive Maintenance Checks and Services (Cont'd).*

| ITEM NO. | INTERVAL | LOCATION<br>ITEM TO CHECK/ SERVICE | CREWMEMBER<br>PROCEDURE | NOT FULLY MISSION CAPABLE IF: |
|---|---|---|---|---|
| 94 | Monthly | Frame | DRIVER<br>**a.** Check chassis for loose or missing screws (11) and rivets (12) securing fifth wheel (10) to side rails (13), and side rails (13) to vehicle (TB 9-2300-247-40). | |
| | | | **b.** Using a .001-inch thick feeler gauge check for space between rivet head on the riveted frame members. Penetration of feeler gauge between rivet head and riveted member is reason to suspect riveted connection and/or rivet should be replaced. | **b.** Loose or missing rivets. |
| | | | **c.** Thoroughly clean rivet and riveted connection of all dirt, grease, and oil. Using an oil can, apply lubricating oil around suspect rivet and riveted connection. Allow approximately 10-20 seconds for oil to penetrate. Wipe rivet and riveted connection free of oil. Tap rivet with an eight-pound hammer. Any indication of oil around rivet indicates a loose rivet. Notify unit maintenance to replace all loose rivets. Check all riveted connections for signs of movement, such as bare or shiny spots, or other indications of movement between rivet and framing member. If movement is indicated, rivet and connection are loose. | **c.** Loose or missing rivets. |

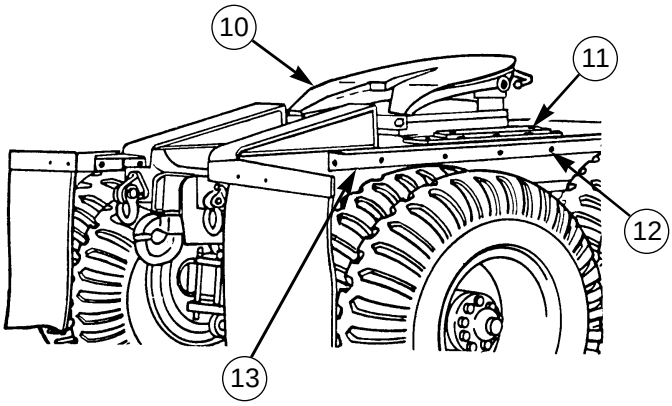

*Table 2-2. Preventive Maintenance Checks and Services (Cont'd).*

| ITEM NO. | INTERVAL | LOCATION<br>ITEM TO CHECK/ SERVICE | CREWMEMBER PROCEDURE | NOT FULLY MISSION CAPABLE IF: |
|---|---|---|---|---|
| LUBRICANTS | | | EXPECTED TEMPERATURES | |
| | | | Above 15°F (Above -9°C) / +40 TO -15°F (+4 TO -26°C) | +40 TO -65°F (+4 TO -54°C) |
| GAA-GREASE, AUTOMOTIVE AND ARTILLERY (MIL-G-10924) | | | ALL TEMPERATURES | |
| 95 | Monthly | Fifth Wheel (M818) | DRIVER<br>Thoroughly clean base plate of fifth wheel (2) and approach plate (1) of all dirt, grease, and oil. Coat approach plate (1) and base plate of fifth wheel (2) with grease. | |

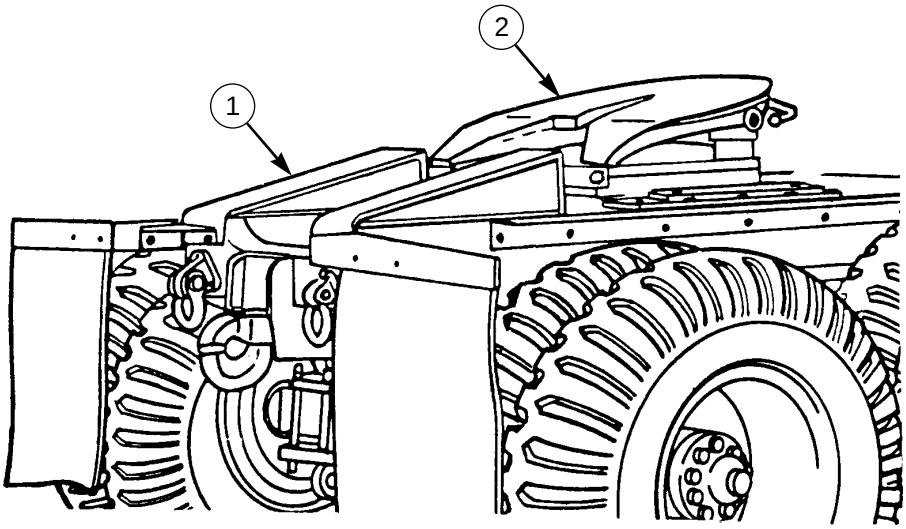

*Table 2-2. Preventive Maintenance Checks and Services (Cont'd).*

| ITEM NO. | INTERVAL | LOCATION<br>ITEM TO CHECK/ SERVICE | CREWMEMBER<br>PROCEDURE | NOT FULLY MISSION CAPABLE IF: |
|---|---|---|---|---|
| 96 | Monthly | Van Hydraulic Liftgate | DRIVER<br>Inspect liftgate (3), lift arms, and support assemblies for bends, breaks, and missing parts.<br> 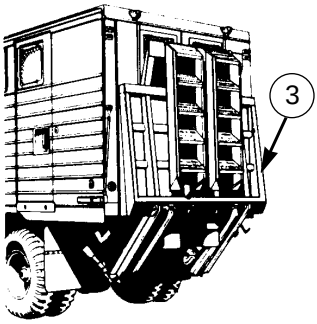 <br> | Bends, breaks, or missing parts. |
| 97 | Monthly | Front Winch | DRIVER<br>**a.** Check shearpin (5) for presence and condition. (Shearpin connects U-joint yoke and winch drive shaft.) It is retained with cotter pins (4).<br>**b.** Check PTO and drive shaft for mounting and completeness.<br> 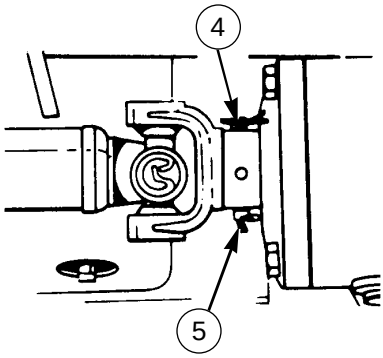 <br> | **NOTE**<br>Replace with proper shearpin if missing, broken, cracked, or improper shearpin is used. |
| 98 | Monthly | M815 Midships Winch | DRIVER<br>**NOTE**<br>Front and midships winch controls are identical. Follow front winch operation checks a. and b. in preceding item for midships winch. | Vehicle is not ready/ available if mission requires bolster operation. |

# Section III. OPERATION UNDER USUAL CONDITIONS

## 2-11. GENERAL

This section provides instructions for vehicle operations under moderate temperature, humidity, and terrain conditions. For vehicle operations under unusual conditions, refer to section IV of this chapter.

WARNING

**This vehicle has been designed to operate safely and efficiently within the limits specified in this TM. Operation beyond these limits is prohibited IAW AR 70-1 without written approval from the Commander, U.S. Army Tank-Automotive Command, ATTN: AMSTA-CM-S, Warren, MI 48397-5000.**

**NOTE**

Before you attempt to operate your vehicle, be sure you perform the preventive maintenance checks and services (see table 2-2).

## 2-12. STARTING THE ENGINE (ABOVE +32°F) (0°C)

**WARNING**

**HIGH INTENSITY NOISE**

Hearing protection is required for all personnel working in and around this vehicle while vehicle engine is running

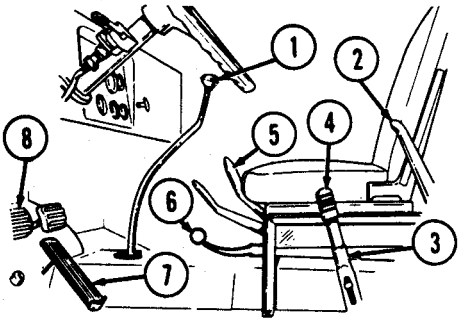


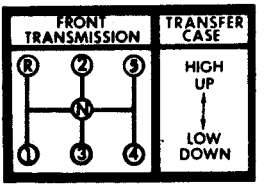


**a.** Release parking brake by pushing forward parking brake lever (3). Turn knob (4) on end of lever (3) handle to adjust brake cable tension and reapply parking brake.

**b.** Adjust operator's seat.

**c.** Adjust left and right rearview mirrors. Make sure both mirrors provide a clear rear view.

**d.** Make sure vehicle front and side windows are clean. If not, clean windows before attempting to start vehicle.

**e.** Place gearshift lever (1) in "N" (neutral) position.

**f.** On vehicles with a front winch, make sure winch control lever (5) is in "N" (neutral) position and secured by hinged lock.

**g.** On vehicles so equipped, make certain power divider control lever (2) is in neutral position and transfer power takeoff control lever (6) is disengaged (down position).

**CAUTION**

If emergency stop control is pulled out, notify organizational maintenance.

**h.** Make sure emergency engine stop control (11) is pushed in all the way.

i. Check air cleaner indicator (14). Press reset button. If red appears, indicating air restriction, notify organizational maintenance.

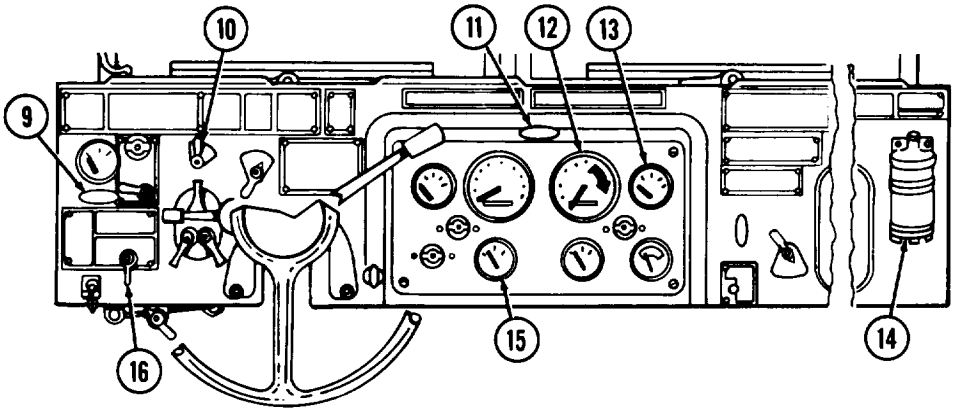


j. Place battery switch (10) in ON position,

k. Fully depress clutch pedal (8).

l. Depress accelerator (7) to halfway point.

**CAUTION**

- Do not hold ignition switch (16) in START position for more than 10 seconds. If engine does not start, wait 10 to 15 seconds before trying to start engine again. Engine starter can be damaged.
- Do not race engine above 800-1000 rpm.

m. Place ignition switch lever (16) in START position. Release lever after engine starts. Lever will return automatically to RUN position.

n. Release clutch pedal (8).

o. Adjust hand throttle control (9) until tachometer (12) indicates 800-1000 rpm.

**CAUTION**

Pull out emergency engine stop control (11) if oil pressure does not register or suddenly drops to less than 15 psi (103.4 kPa) as indicated.

p. Allow engine to run until temperature gage (13) indicates 120°F (49°C), Unlock hand throttle (9) by turning it left or right, and push it in to allow engine speed to drop to idle (600-650 rpm).

q. Check your instruments!

**CAUTION**

If any instrument reading is not normal, stop engine by turning ignition switch (16) and battery switch (10) to OFF positions and notify organizational maintenance.

(1) Oil pressure gage (15) should register about 15 psi (103.4 kPa).

TA 094288

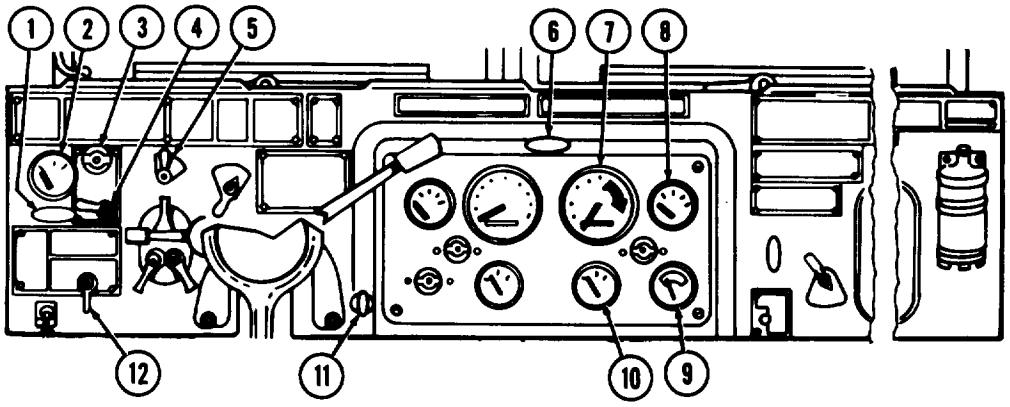


**WARNING**

Do not try to move truck until air pressure buzzer stops sounding. For effective braking, minimum air pressure of 65 psi (448.2 kPa) must register on air pressure gage.

(2) Air pressure gage (10) should rise from 0 to 65 psi (448.2 kPa) before air pressure warning buzzer stops, indicating compressed air system is operating properly.

(3) Battery-generator indicator (9) should read in green area.

r. Pull out emergency engine stop control (6) if any of the following conditions exist:

(1) Noisy engine and/or excessive engine vibration.

(2) Oil pressure does not register or suddenly drops to less than 15 psi (103.4 kPa).

(3) Sudden increase in coolant temperature beyond normal operating temperature of 175° to 195°F (79°C to 91°C).

(4) Engine continues to run after ignition switch (12) and battery switch (5) are turned to OFF position.

**NOTE**

If emergency shutdown is necessary, notify organizational maintenance.

## 2-13. COLD WEATHER STARTING (BELOW +32°F) (0°C)

a. Perform steps a. through i. in paragraph 2-12.

b. Pull hand throttle control (1) out approximately one third and lock in place by turning left or right.

c. Place battery switch (5) in ON position.

d. Place preheater switch (4) in ON position. Preheater indicator lamp (3) should illuminate. Wait 30 seconds and if lamp does not illuminate, notify organizational maintenance.

e. Depress clutch pedal (13) all the way and hold in that position.

**CAUTION**

Do not hold ignition switch (12) in START position for more than 10 seconds. If engine does not start. wait 10-15 seconds before trying to start engine again. Engine starter can be damaged.

TA 094289

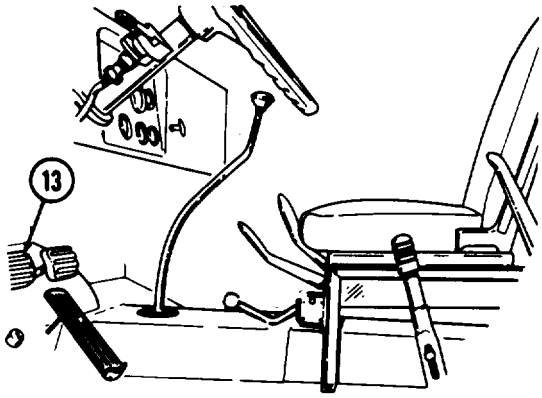


**f.** Before starting engine, operate hand primer pump control handle (11) until primer pressure gage (2) gives a reading of 80 psi (551.6 kPa). and turn ignition switch (12) to START position. Primer pressure gage (2) should maintain a reading of 30-60 psi (206.8-413.7 kPa) while cranking engine.

**g.** Release ignition switch (12) after engine starts. Switch (12) will return automatically to RUN position. Release clutch pedal (13) slowly.

**h.** Continue using hand primer pump control handle (11) until a constant reading of 30-60 psi (206.8-413.7 kPa) is shown on primer pressure gage (2). Engine should be running smoothly in approximately 3 minutes. If vehicle engine does not start, go to troubleshooting.

**i.** Push primer pump control handle (11) in and turn handle left or right to lock it in position.

**j.** Place preheater switch (4) in OFF position.

**k.** Adjust hand throttle control (1) until tachometer (7) indicates 800-1000 rpm.

**l.** Allow engine to run until temperature gage (8) indicates 120°F (49°C). Unlock hand throttle control (1). Push it in until engine speed drops to normal idle (600-650 rpm).

**m.** Check your instruments! Refer to step q in paragraph 2-12.

**n.** Pull out emergency engine stop control (6) if the following conditions exist:

**(1)** Noisy engine and/or excessive engine vibration.

**(2)** Oil pressure does not register or suddenly drops to less than 15 psi (103.4 kPa).

**(3)** Sudden increase in coolant temperature beyond normal operating temperature of 175°F to 195°F (79°C to 91°C).

**(4)** Engine continues to run after ignition switch (12) and battery switch (5) are turned to OFF positions.

**NOTE**

If emergency shutdown is necessary, notify organizational maintenance.

TA 094290

## 2-14. OPERATION OF VEHICLE SERVICE LIGHTS

Select and set light switch for lighting required. See following chart for switch positions:

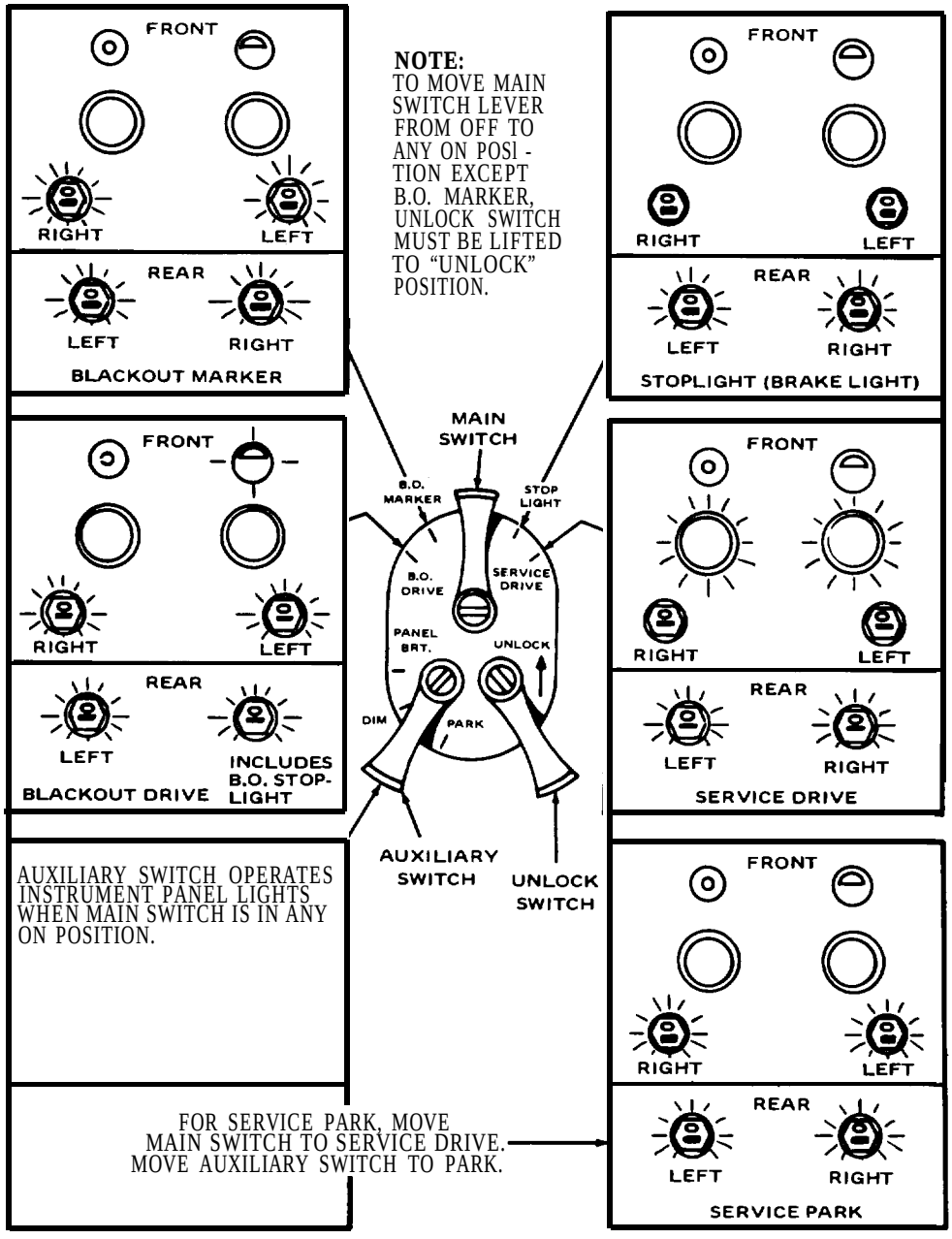


TA 094291

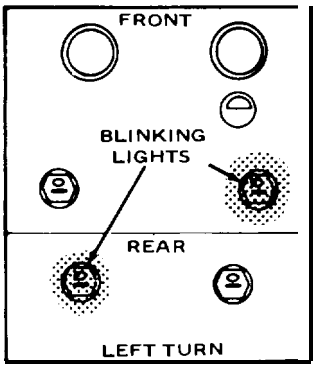


FOR TURN SIGNALS, MOVE MAIN SWITCH TO EITHER SERVICE DRIVE OR STOP LIGHT POSITION. MOVE TURN SIGNAL CONTROL LEVER UP FOR RIGHT TURN AND DOWN FOR LEFT TURN. MOVE TO NEUTRAL TO DEACTIVATE TURN SIGNALS.

**NOTE**

WHEN THE HAZARD WARNING LIGHTS/EMERGENCY FLASHERS ARE IN USE, THEY OVERRIDE THE BRAKE LIGHT/STOP LAMP OPERATION, THEREFORE, IF YOU ARE DRIVING WITH THE HAZARD WARNING LIGHTS/EMERGENCY FLASHERS OPERATING, EXERCISE EXTRA CARE AND BE PREPARED T0 UTILIZE HAND SIGNALS TO INDICAIE A STOP.

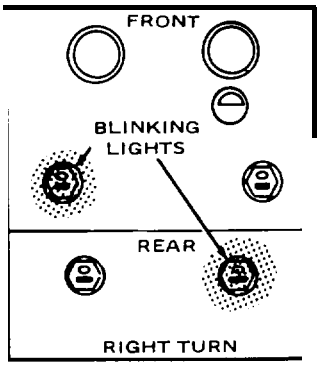


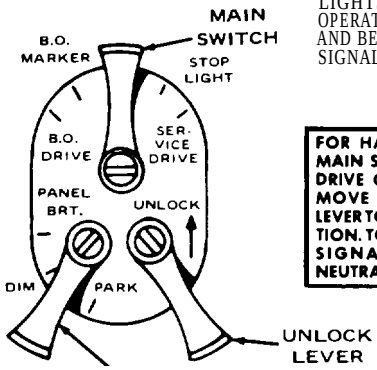


**FOR HAZARD WARNING, MOVE MAIN SWITCH TO EITHER SERVICE DRIVE OR STOP LIGHT POSITION. MOVE TURN SIGNAL CONTROL LEVER TO HAZARD WARNING POSITION. TO DEACTIVATE, MOVE TURN SIGNAL CONTROL LEVER TO NEUTRAL POSITION.**

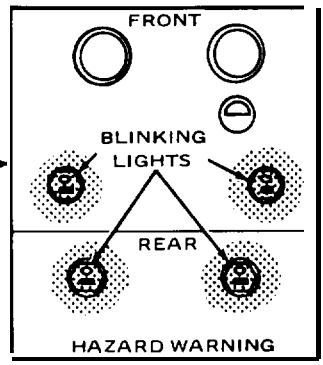


## 2-15. PLACING AND SUSTAINING VEHICLE IN MOTION

**NOTE**

The vehicle cannot be moved until the transfer selector lever (2) is in the HIGH (up) or LOW (down) position. Gearshift lever (1) positions do not in any way affect selection of the transfer range (LOW or HIGH) to be used. The transfer L.OW range provides more power and lower speed in the five forward transmission speeds, for heavy loads or difficult terrain conditions. The transfer HIGH range provides greater speed at lower power to the five forward transmission speeds for normal load and road conditions.

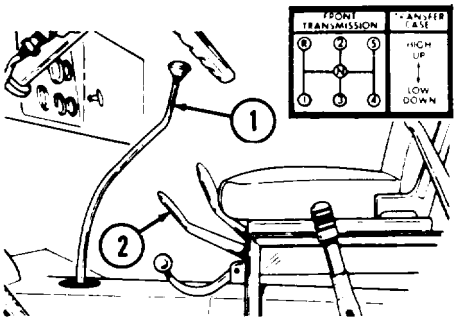


**a.** Be sure all auxiliary equipment and tools are locked and stored for travel.

**b.** Adjust operator's seat as required.

**c.** Start engine. Refer to paragraphs 2-12 and 2-13 as required.

TA 094292

d. Set vehicle lighting switch (1) for lighting required.

**CAUTION**

- Shift to the next higher gear position at a road speed just below the maximum speed indicated on the data plate (10). Shifting too soon or too late causes undue wear on the power train.
- Do not allow engine speed to exceed 2100 rpm as shown on tachometer (3) or tachograph (4) in any gear shift lever position.
- Do not down-shift gearshift lever (2) more than one position at a time. Do not down-shift transmission above 1600 rpm.

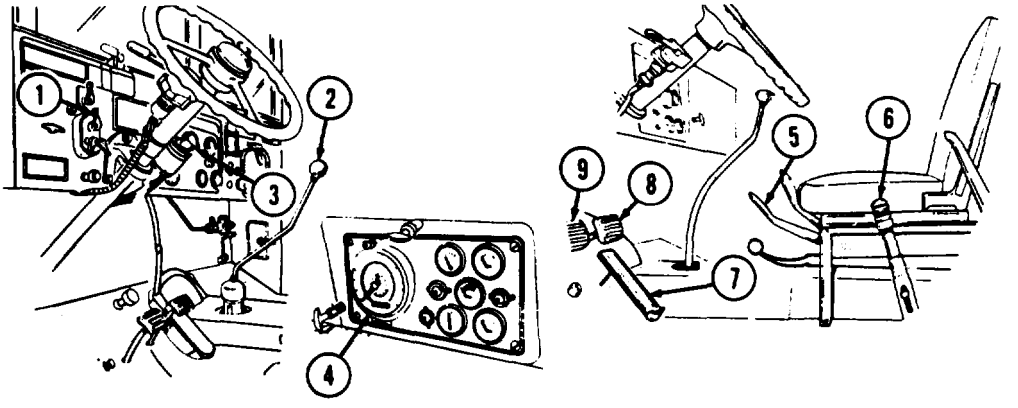


**e.** Depress service brake pedal (8), release parking brake lever (6), and release service brake pedal (8).

**f.** Depress clutch pedal (9) all the way and place gearshift lever (2) in first or reverse gear, depending on desired direction of travel.

**NOTE**

It is mandatory that first (low) transmission gear be used to place vehicle in forward motion under all normal conditions.

**g.** Place transfer selector lever (5) in proper range for load and expected terrain conditions.

**h.** Release clutch pedal (9) slowly and depress accelerator pedal (7) to increase vehicle speed.

**CAUTION**

Do not ride clutch by resting foot on clutch pedal (9) while driving or when stopped with engine at idle. This causes heat buildup, premature wear, and damage to equipment. Clutch pedal (9) must be fully released while vehicle is in operation.

**i.** When vehicle speed approaches maximum road speed for gear position used in starting, and higher speed is desired, depress clutch pedal (9). Shift gearshift lever (2) to next higher gear position, as shown on data plate (10). Release clutch pedal slowly and at the same time, depress accelerator pedal (7).

TA 094293

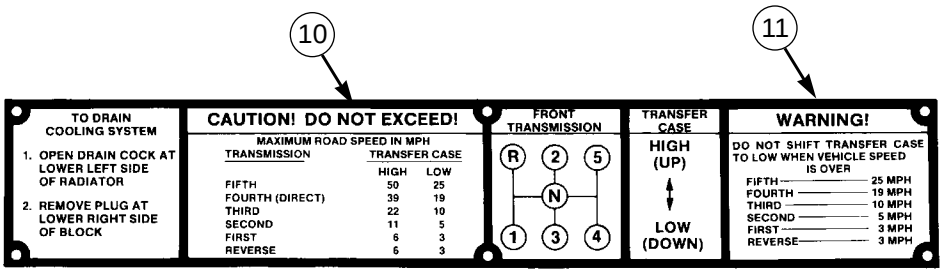


**j.** Driving vehicle down steep grades.

**WARNING**

Do not let vehicle coast downhill with clutch pedal (9) depressed. Vehicle will increase speed and may go out of control, resulting in injury to personnel.

**(1)** Depress brake pedal (8) to slow down vehicle.

**(2)** Do not exceed vehicle road speed shown on caution plate (10).

**(3)** Check warning plate (11) before shifting transfer selector lever (5).

**k.** Driving vehicle up steep grades:

**(1)** If vehicle slows down, downshift gearshift lever (2) before engine starts to strain or vibrate.

**(2)** When vehicle is heavily loaded or when road conditions are bad, additional traction can be obtained as follows:

**(a)** Slow down vehicle.

**(b)** Depress clutch pedal (9) all the way.

**(c)** Move transfer selector lever (5) down to LOW position.

**(d)** Release clutch pedal (9) slowly.

**(e)** Depress accelerator pedal (7) to bring vehicle to desired speed.

## 2-16. STOPPING THE VEHICLE AND ENGINE

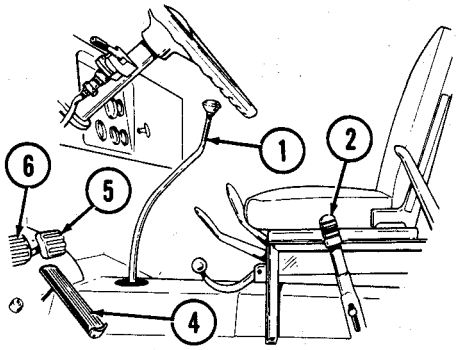


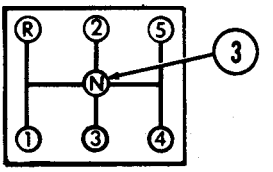


**a.** Release accelerator pedal (4).

**b.** Depress service brake pedal (5) evenly and depress clutch pedal (6) to bring vehicle to complete stop.

**c.** Allow engine to run at idle speed, 600-650 rpm, as shown on tachometer (7) or tachograph (8).

**d.** Place gearshift lever (1) in "N" (neutral) position (3).

**e.** Release clutch pedal (6).

**f.** Pull parking brake lever (2) up to apply.

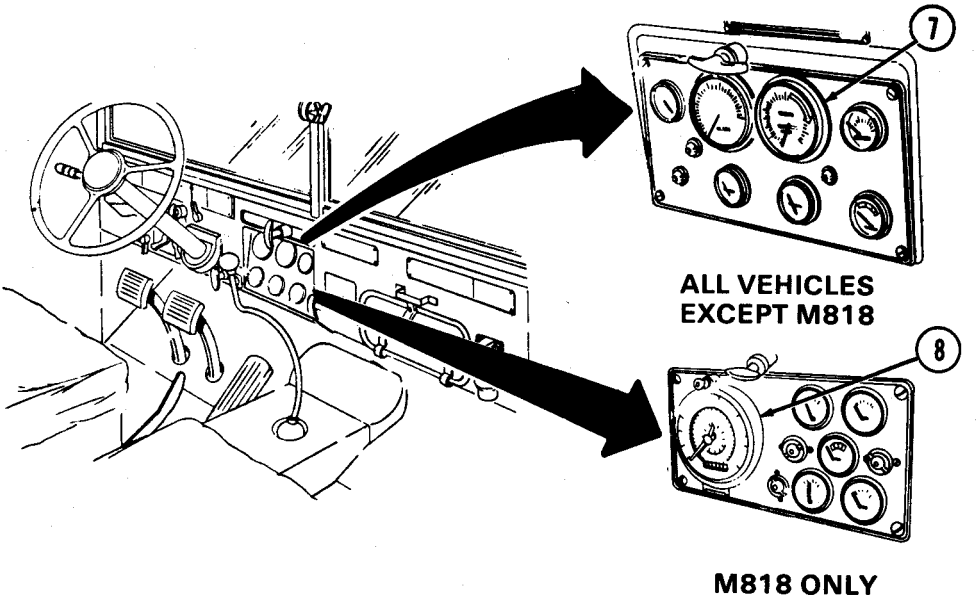


TA 094295

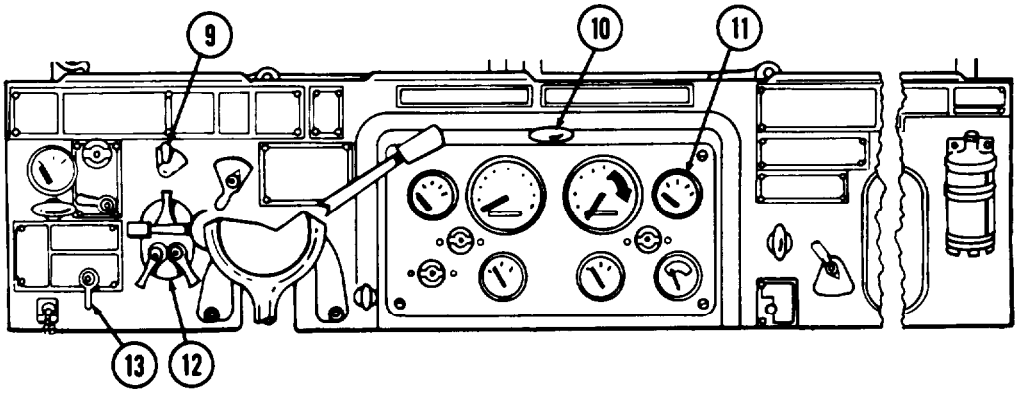


**CAUTION**

Do not shut down engine if temperature gage (11) is above 195°F (91°C).

**g.** Allow engine to idle for five minutes if temperature gage (11) reads above 195°F (91°C). If engine fails to cool to 195°F (91°C). shut down engine and notify organizational maintenance.

**h.** Turn vehicle light switch (12) to OFF position.

**i.** Place ignition switch (13) and battery switch (9) in OFF position.

**j.** Release service brake pedal (5) and position chock blocks.

**NOTE**

If engine continues to run after ignition switch lever (13) and battery switch (9) have been placed in OFF position, pull emergency stop control (10) and notify organizational maintenance.

**k.** Perform after operation services in table 2-2, PMCS.

TA 094296

## 2-17. BACKING THE VEHICLE

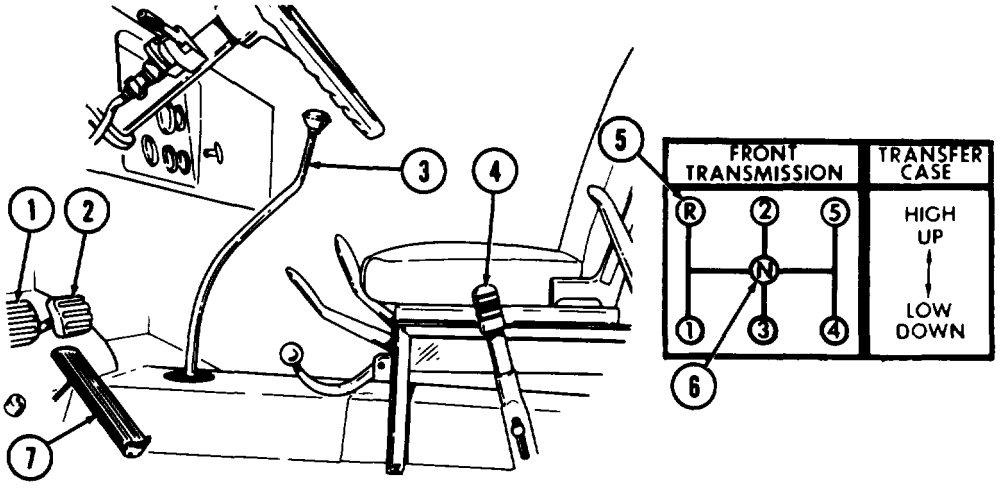


**a.** Start engine; (refer to paragraphs 2-12 and 2-13) as required.

**b.** Depress service brake pedal (2) and release parking brake lever (4).

**c.** Depress clutch pedal (1) all the way.

**CAUTION**

Vehicle must be at a complete stop before placing gearshift lever (3) in “R” (reverse) position (5).

**d.** Place gearshift lever (3) in “R” (reverse) position (5) and release service brake pedal (2).

**e.** Release clutch pedal (1) slowly and depress accelerator pedal (7) until vehicle begins to move.

**NOTE**

Assistant must guide the driver with hand signals as vehicle is being backed up.

**f.** Back vehicle into position.

**g.** When vehicle has been backed into position, release accelerator pedal (7), depress clutch pedal (1) all the way, and depress service brake pedal (2) evenly to bring vehicle to a stop.

**h.** Place gearshift lever (3) in "N" (neutral) position (6).

**i.** Release clutch pedal (1).

**j.** Pull parking brake lever (4) up to apply.

**k.** Release service brake pedal (2).

**l.** Stop engine; refer to paragraph 2-16.

TA 094297

## 2-18. USING SLAVE RECEPTACLE TO START ENGINE

**CAUTION**

Check condition of batteries before slave starting of engine.

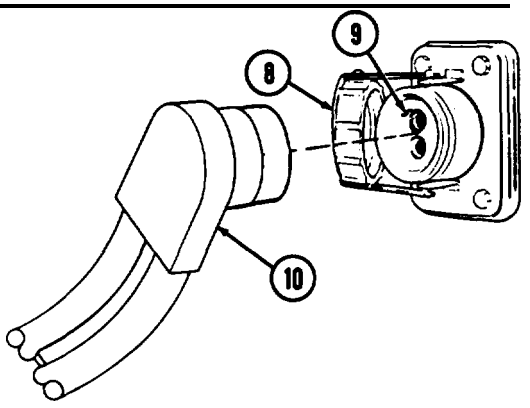


**a.** Position right side of slaving (recharging) vehicle to the right side of vehicle needing battery jump.

**b.** Stop slaving vehicle engine.

**CAUTION**

When slaving, always connect slave cable to disabled vehicle first. Damage to batteries or cable may result from improperly connecting hot batteries before connecting cable to receptacle of disabled vehicle.

**NOTE**

Make sure electrical switches on both vehicles are in OFF position.

**c.** Remove cover (8) from slave receptacle (9) and connect slave cable (10) to slave receptacle (9) on disabled vehicle. Repeat procedure on slaving vehicle.

**d.** Start slaving vehicle engine and set idle speed at 1,000-1,100 rpm.

**e.** Start slaved vehicle engine.

**f.** After engine starts and is running smoothly, disconnect slave cable (10) from both vehicles.

**g.** Put cover (8) back on receptacle (9).

**h.** Clean and stow slave cable (10).

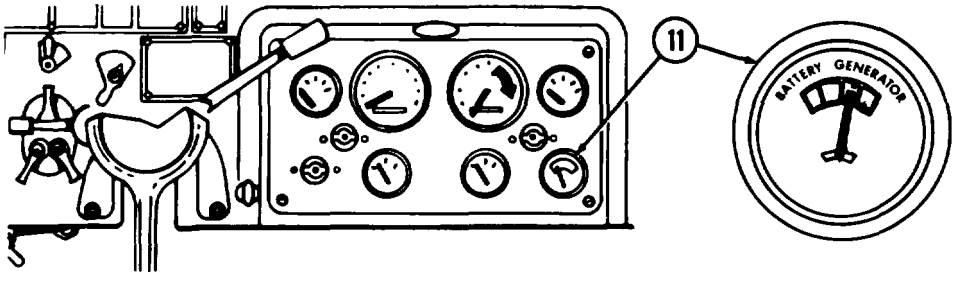


**i.** Observe battery-generator indicator (11) on slaved vehicle, If indicator (11) is not in green area, notify organizational maintenance.

TA 094298

## 2-19. RAISING AND SECURING HOOD

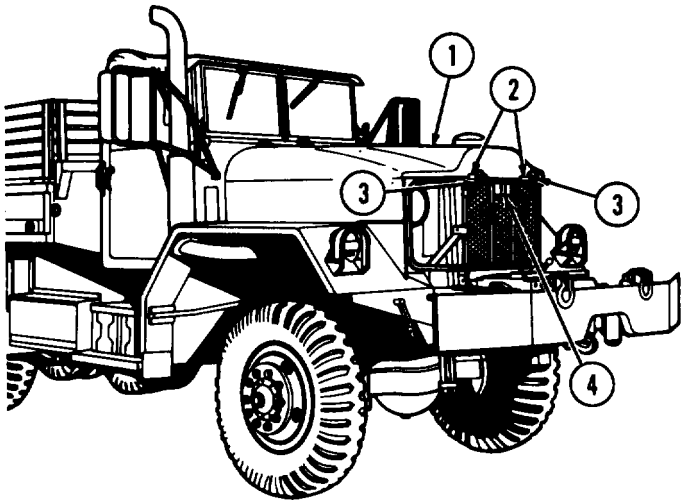


**NOTE**

The following procedure applies to all vehicles except M812A1.

**a.** Pull up on two holddown catches (2) until they are free of two handles (3).

**b.** Push in and hold hood safety latch (4).

**c.** Lift hood (1) and release hood safety latch (4).

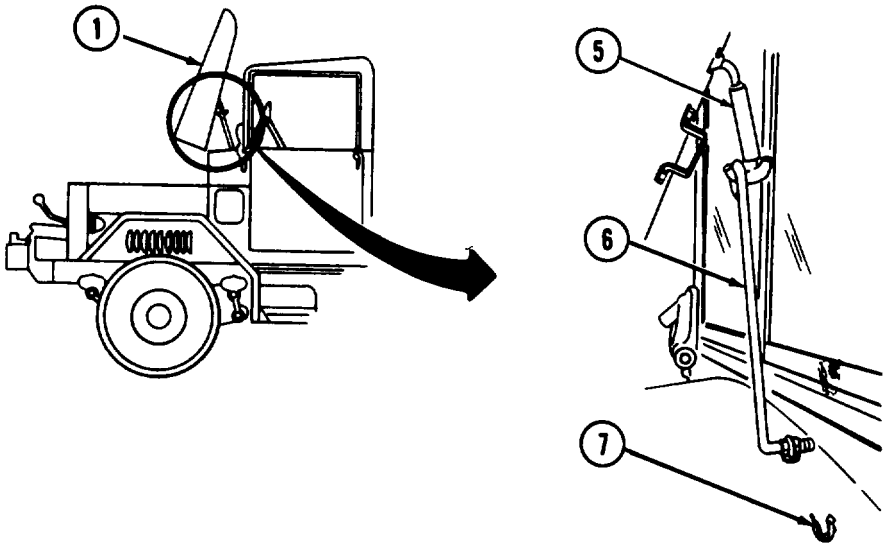


**d.** Raise hood (1) to position shown.

**e.** Pull hood support hook (6) out of storage clip (7).

**f.** Swing hood support hook (6) up and secure to holddown catch (5).

TA 094299

**NOTE**

The following procedure applies to M812A1 only.

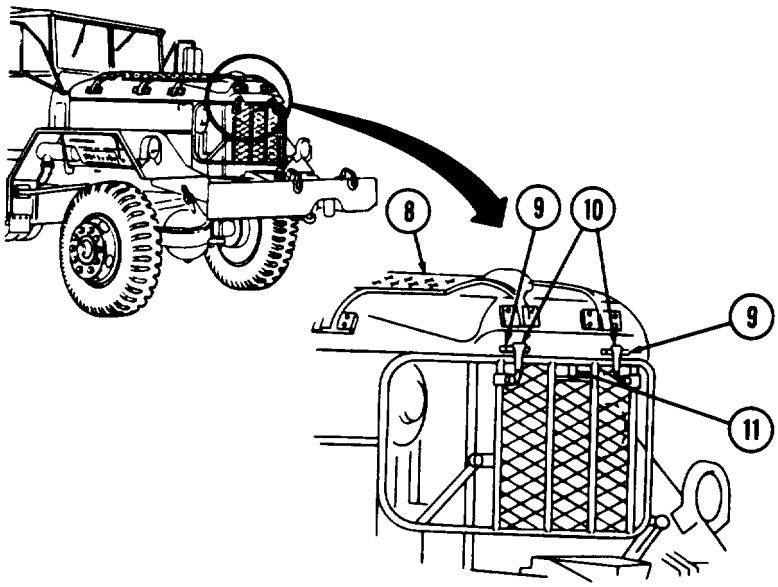


**g.** Pull up on two holddown catches (10) until they are free of handles (9).

**h.** Push in and hold hood safety latch (11).

**i.** Lift hood (8) and release hood safety latch (11).

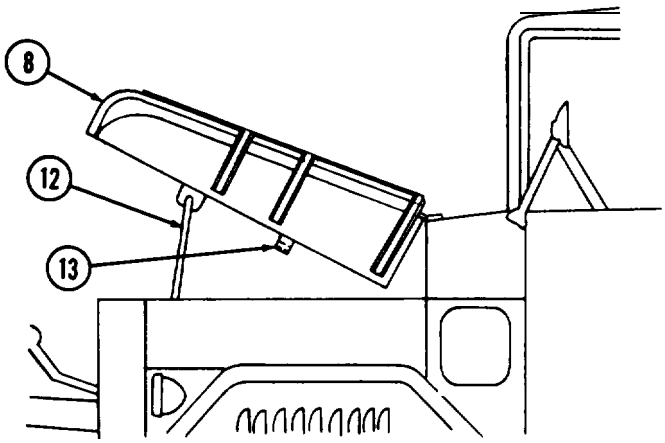


**j.** Raise hood (8) to position shown.

**k.** Pull hood support rod (12) out of storage clip (13).

**l.** Swing support rod (12) down to left fender well and secure in rod hole.

TA 094300

## 2-19.1. SEAT BELT OPERATION (FIXED SEAT AND FLOATING SEAT)

**a. Floating Seat.**

**(1)** Grasp seat belt (16) at buckle (15) and pull toward cab rear panel-mounted anchor buckle (14).

(2) Connect buckle (15) to buckle (14).

(3) Make sure seat belt (16) is secure and snug before vehicle is placed in motion.

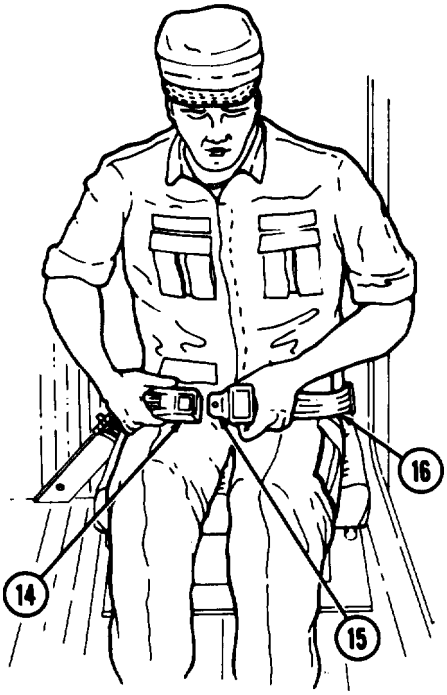


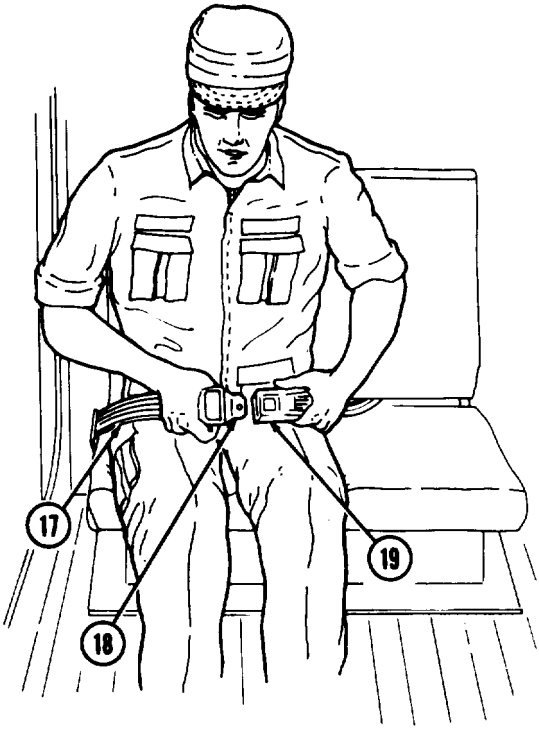


**b. Fixed Seat.**

**(1)** Grasp seat belt (17) at buckle (18) and pull toward cab rear panel-mounted anchor buckle (19).

(2) Connect buckle (18) to buckle (19).

(3) Make sure seat belt (17) is secure and snug before vehicle is placed in motion.

TA 351146

## 2-20. VEHICLE TOWING

### a. Towing Vehicle With Towbar to Start Engine

**NOTE**

- Vehicles may be towed to start engines only in emergency cases, when neither normal starting (paragraphs 2-12 and 2-13) nor starting by slaving (paragraph 2-18) is possible.
- If batterv trouble makes towing necessary, you must override the electrically-operated fuel shutoff valve. If starter trouble makes towing necessary, proceed to step (4) below.

(1) Raise engine compartment hood and secure; refer to paragraph 2-19.

(2) Override electrical fuel shutoff valve by turning knurled fuel shutoff valve override screw (1) on emergency fuel shutoff valve (2) clockwise to closed position.

(3) Lower engine compartment hood and secure in closed position.

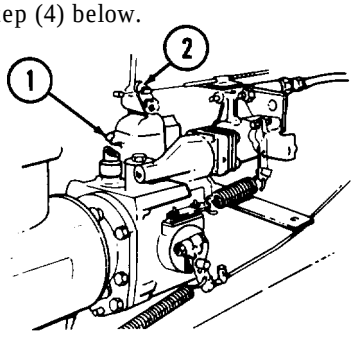


**NOTE**

Vehicles with inoperative compressed air system will be towed only with towbar. Vehicles with compressed air in air reservoirs may be towed with towbar, tow chain, or tow cable. General instructions for towing and recovery are given in FM 20-22.

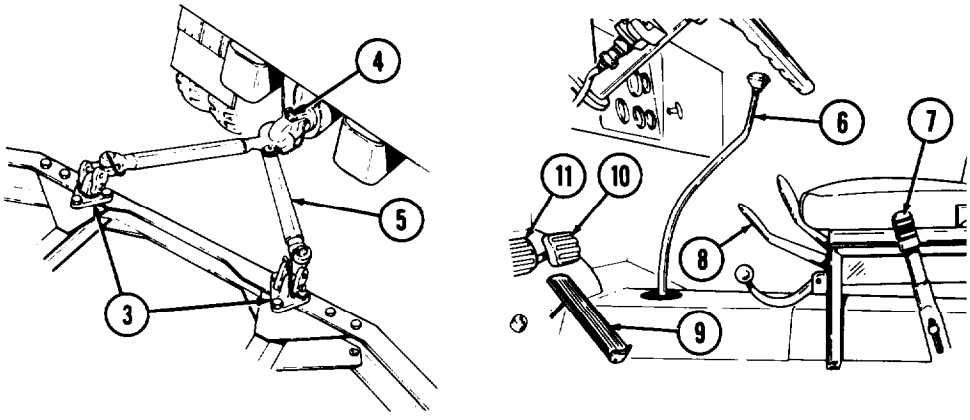


**WARNING**

Make sure safety pin has been properly installed and secured in pintle before proceeding with mission. Failure to comply may result in injury to personnel or damage to equipment.

**(4)** Adjust towbar (5) to fully collapsed length and connect to towed vehicle lifting shackle brackets (3) and to towing vehicle pintle (4). Connect utility chains between vehicles in the event towbar breaks or becomes disconnected.

TA 094301

**(5)** Connect airbrake system of towing vehicle to intervehicular couplings located under front fenders of vehicle to be towed.

**WARNING**

Failure to turn on air shutoff valves will result in loss of brakes on towed vehicle. This may cause injury to personnel.

**(6)** Turn on both service and emergency brakes air shutoff valves.

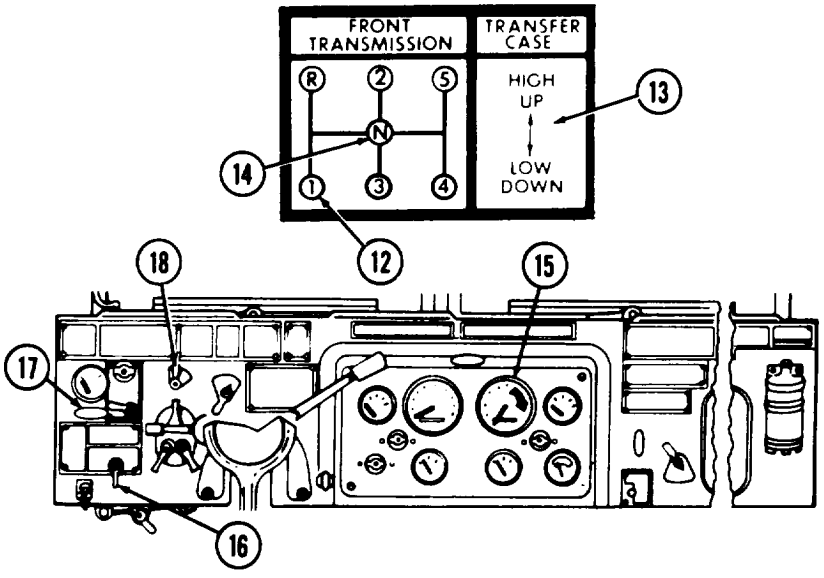


**(7)** Depress clutch pedal (11) of towed vehicle and place gearshift lever (6) in "1" (first) gear (12). Place transfer selector lever (8) up to HIGH position (13). Release parking brake lever (7) of towed vehicle.

**(8)** Turn on battery switch (18) and place ignition switch (16) in RUN position.

**NOTE**

Towed vehicle should start within 100 yards (91.40 m). If engine fails to start, stop towing operation. Notify organizational maintenance.

**(9)** Signal towing vehicle operator or ground guide to begin towing. When towed vehicle reaches 10 mph (16.09 km). slowly release clutch pedal (11) and depress accelerator pedal (9).

**(10)** Depress clutch pedal (11) immediately after engine starts.

**(11)** Signal towing vehicle operator to stop and depress service brake pedal (10).

**(12)** Place gearshift lever (6) in "N" (neutral) position (14) and release service brake pedal (10) after vehicle stops.

**(13)** After vehicle comes to a complete stop, apply parking brake (7) and pull throttle control (17) out until engine speed reaches 800-1,000 rpm on tachometer (15). Lock throttle control (17) in position by turning left or right.

TA 094302

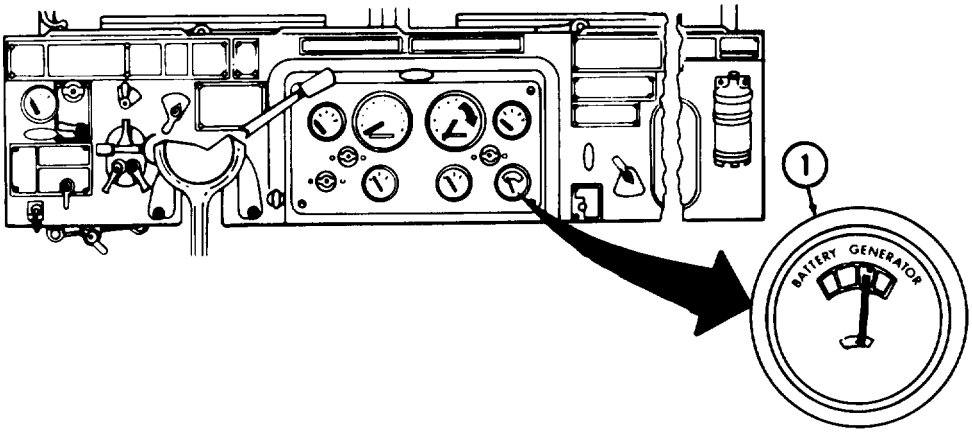


**(14)** Observe all instruments and allow engine to warm up. Check battery-generator indicator (1) to be sure alternator is producing current. If indicator (1) is in red or yellow area, notify organizational maintenance.

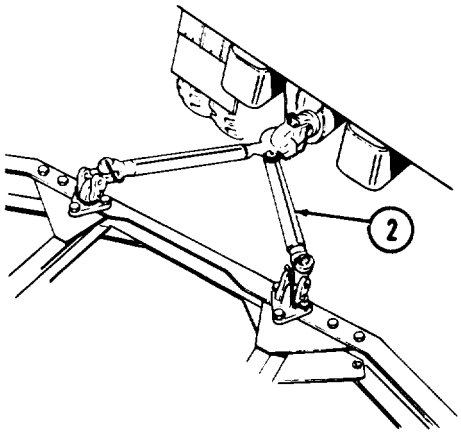


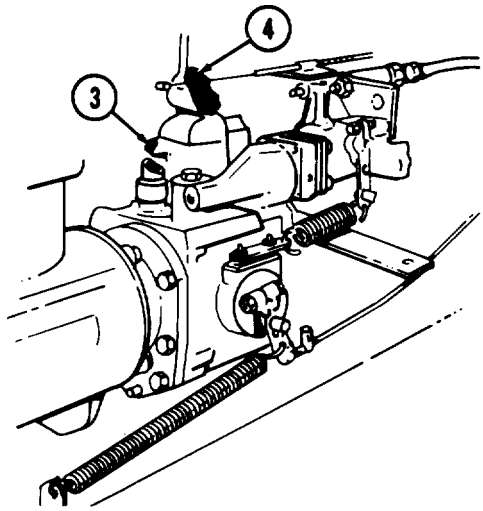


**(15)** Disconnect towbar (2) from towing and towed vehicles and stow.

**(16)** Raise engine compartment hood and secure (refer to paragraph 2-19).

**(17)** Turn knurled fuel shutoff valve override screw (3) on emergency fuel shutoff valve (4) counterclockwise to open position.

**WARNING**

Failure to completely turn off air shutoff valves will result in loss of vehicle brakes, This may cause injury to personnel.

**(18)** Completely turn off both service and emergency brakes air shutoff valves.

**(19)** Disconnect airbrake system of towing vehicle from intervehicular couplings of towed vehicle.

TA 094303

**b. Towing with Chain or Cable to Start Engine.**

**CAUTION**

Vehicle cannot be towed with chain or cable unless air pressure is at least 75 psi (517.1 kPa).

**NOTE**

- In emergencies, disabled vehicles may be towed to start engines with towing chains or cables. The procedure is the same as for Towing Vehicle to Start Engine (paragraph 2-20a) except for attaching the chains or cables. To attach chains and cables, perform steps (1) through (3).
- Towed vehicle should start within 100 yards (91.40 m). If engine fails to start, stop towing operation. Notify organizational maintenance.

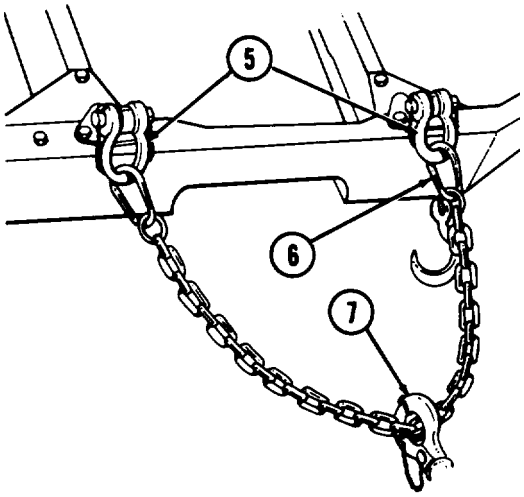


**(1)** Attach each end of chain (6) or cable to each lifting shackle (5) of vehicle to be wed. Chain or cable should be long enough to permit both vehicles to maneuver.

**WARNING**

Make sure safety pin has been properly installed and secured in pintle before proceeding with mission. Failure to comply may result in injury to personnel or damage to equipment.

**(2)** Attach center of chain or cable to the pintle (7) of the towing vehicle.

**WARNING**

Apply parking brake on towed vehicle before disconnecting vehicles. Failure to do so may cause severe injury or death to personnel.

**(3)** Remove and stow chain (6) or cable when towing operation is completed.

TA 094304

**c. Flat-Towing With Towbar.**

**WARNING**

- Make sure safety pin has been properly installed and secured in pintle before proceeding with mission. Failure to comply may result in injury to personnel or damage to equipment.
- Never permit a driver or passenger in towed vehicle unless in an emergency. Failure of equipment may cause injury to personnel.

**CAUTION**

Vehicle with inoperative compressed air system will be towed only with a towbar. Vehicles with compressed air in air reservoir may be towed with a towbar, tow chain, or tow cable if towed vehicle has at least 75 psi (517 kPa) on air pressure gage, indicating enough pressure in air reservoir to operate service brakes.

**NOTE**

General instructions for towing and recovery are given in FM 20-22.

**(1)** Adjust towbar (3) to fully collapsed length and connect to towed vehicle lifting shackle brackets (1) and to towing vehicle pintle (2).

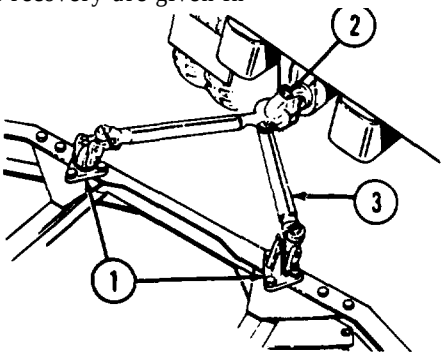


**WARNING**

Connect utility chains between vehicles in the event towbar breaks or becomes disconnected. Injury or death can result.

**(2)** Connect the two utility chains (5) to spring hangers (4) on disabled vehicle by crisscrossing when securing to towing vehicle.

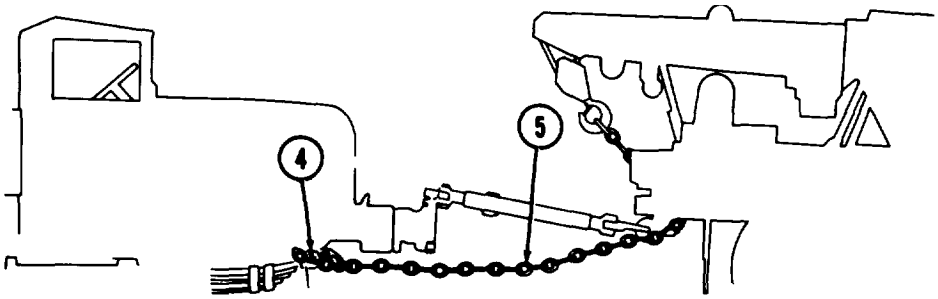


**(3)** Connect airbrake system of towing vehicle to intervehicular couplings located under front fenders of vehicle to be towed.

**WARNING**

Failure to turn on air shutoff valves will result in loss of brakes on towed vehicle. This may cause injury to personnel.

**(4)** Turn on both service and emergency brakes air shutoff valves.

TA 094305

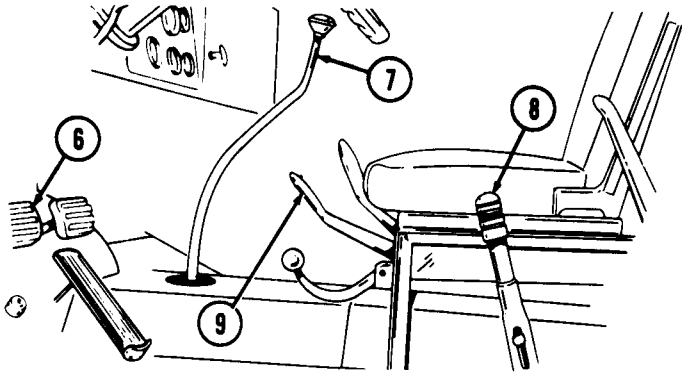


**(5)** Depress clutch pedal (6) of towed vehicle and place gearshift lever (7) and transfer lever (9) in neutral position. Release parking brake lever (8) of towed vehicle.

**WARNING**

Apply parking brake on towed vehicle before disconnecting vehicles. Failure to do so may cause severe injury or death to personnel.

**(6)** After vehicle comes to a complete stop, apply parking brake (8).

**(7)** Disconnect towbar (3) and utility chain (5) from disabled and towing vehicles and stow in designated place.

**WARNING**

Failure to completely turn off air shutoff valves will result in loss of brakes on towing vehicle. This may cause injury to personnel.

**(8)** Completely turn off both service and emergency brakes air shutoff valves.

**(9)** Disconnect airbrake system of towing vehicle from intervehicular couplings of towed vehicle.

**d. Lift-Towing With Wrecker.**

**(1)** If either axle or suspension system of disabled vehicle is badly damaged, it will be necessary to extend the boom and raise front wheels of disabled vehicle off the ground. Boom shipper braces should always be used to take strain off boom hoist ram and swing gears.

**CAUTION**

One front wheel and one set of wheels on forward rear axle of disabled vehicle must be raised off the ground before propeller shafts are removed. One other set of rear wheels should be blocked to prevent disabled vehicle from rolling.

**(2)** If disabled vehicle transfer is damaged, it will be necessary to remove propeller shaft at forward rear axle differential and front propeller shaft. If differentials are damaged, it will be necessary to remove axle shafts and connecting propeller shafts. When axle shafts are removed, cover openings in axle securely to prevent dirt and foreign matter from entering.

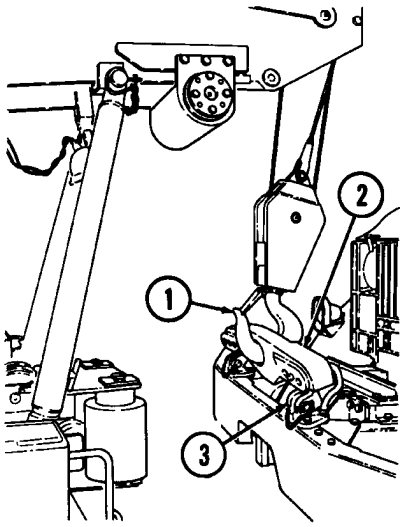


**NOTE**

Block disabled vehicle wheels before beginning lift-tow operations.

**(3)** For lift-tow operations:

**(a)** Attach whifletree (2) to lifting shackles (3) of disabled vehicle.

**(b)** Lower crane block and hook (1) and insert hook through center hole of whiffletree (2).

**(c)** Remove towbar adjustment pins (8) and slide out leg extensions (7).

**(d)** Attach clamps (6) to each leg extension (7) and secure in place with linking pin (10) and attached safety pin (11).

**(e)** Loosen tension adjusting nut (5) atop each clamp (6).

**(e.1)** Remove two screws (15) and lockwashers (16) from clamps (14) and move brake line (13) away from axle (12), far enough to thread chain between brake line (13) and axle (12).

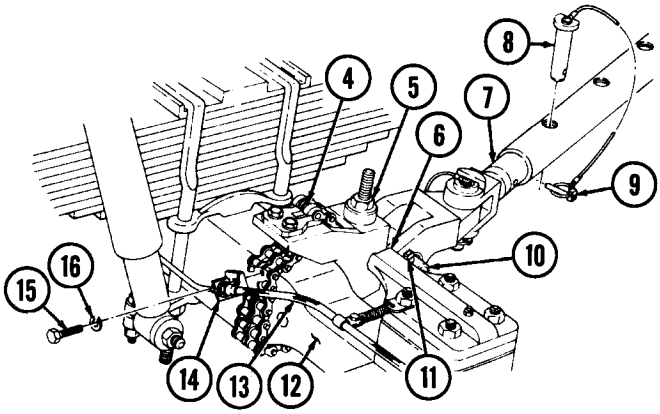


**(f)** Position clamp (6) against front axle (12) of disabled vehicle and wrap clamp chain (4) around axle and back up through clamp. Lock in place by turning tension adjusting nut (5) with wrench until securely tightened.

**(g)** Repeat step f. above with second clamp in position against axle (12) on opposite side of forward differential.

**NOTE**

If necessary, adjust length of towbar while performing step h.

**(h)** After both clamps (6) are tightly secured to disabled vehicle, slide leg extensions (7) back into towbar and secure in place with adjustment pins (8) and retaining pins (9).

**WARNING**

Make sure safety pin has been properly installed and secured in pintle before proceeding with mission. Failure to comply may result in injury to personnel or damage to equipment.

**(i)** Install yoke end of towbar to wrecker pintle hook (17).

**(j)** Connect airbrake system of towing vehicle to intervehicular couplings located under front fenders of vehicle to be towed.

**WARNING**

Failure to turn on air shutoff valves will result in loss of brakes on towed vehicle. This may cause injury to personnel.

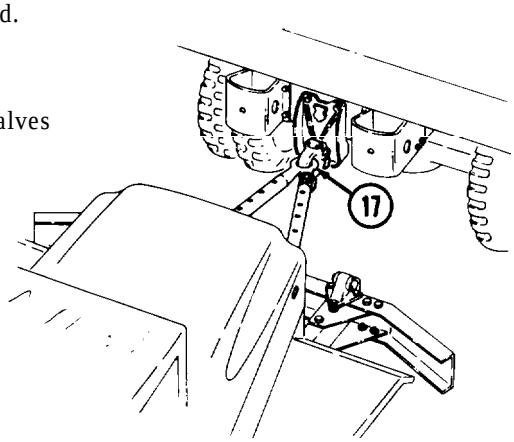


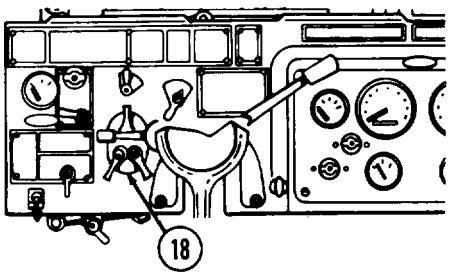


**(4)** Adjust disabled vehicle lighting switch (18) as required by towing conditions.

(5) Place gearshift lever (19) and transfer selector lever (21) on towed vehicle in "N" (neutral) position. Also release parking brake lever (20) if propeller shafts were not removed. Remove wheel blocks.

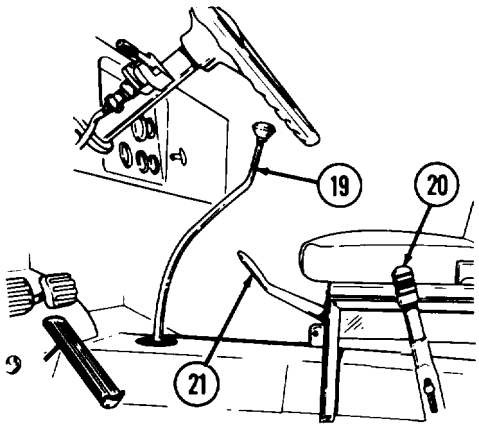


**WARNING**

Never permit a driver or passenger in towed vehicle unless in an emergency. Failure of equipment can cause injury to personnel.

(6) Raise vehicle (refer to paragraph 2-28).

(7) Upon completion of towing operation, block disabled vehicle wheels before removing hook (1) from whiffletree (2).

(8) Turn all electrical switches in towed vehicle to OFF position.

(9) Remove whiffletree (2) from lifting shackles (3) of towed vehicle.

(9.1) Turn off air shutoff valves.

(10) Disconnect airbrake hoses between towed and towing vehicles

(11) Disconnect towbar from towed vehicle and secure brake line (13) and clamps (14) to axle (12) with two lockwashers (16) and screws (15).

TA 094308

## 2-21. INSTALLING CAB TOP AND RAISING WINDSHIELD

**NOTE**

This operation is best accomplished by the operator and one crewmember.

**a.** Release windshield catches (3) and raise windshield (1) to vertical position.

**b.** Tighten knobs (4) on left and right sides of windshield (1) frame.

**c.** Secure windshield catches (3) to hood (2) mounts.

**d.** Lower cab windows.

**e.** Install one pillar post (7) in rear corner of cab (12). Position roof rail (6) to windshield (1) frame and push roof rail catch (5) into windshield (1) to lock catch (5).

**f.** Insert crossbows (9) and (11) over roof rail bows (8) of installed pillar post (7). Make sure crossbow (9) with stave holes is on top roof rail bow (8).

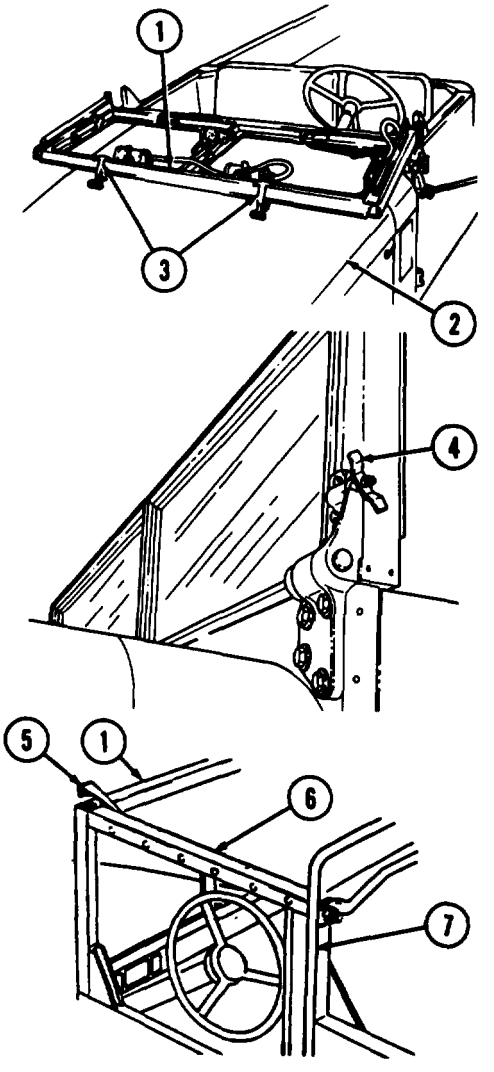


TA 094309

**g.** Insert roof rail bows (8) of opposite pillar post (7) into crossbows (9) and (11), and install pillar post (7) in rear corner of cab (12). Position roof rail (6) to windshield (1) frame and push roof rail catch (5) into windshield (1) frame to lock catch (5).

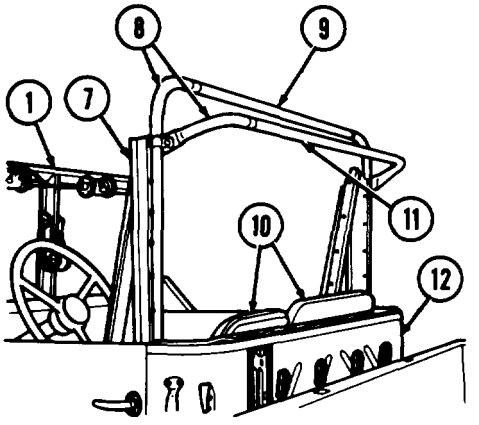


**h.** Place cab top (13) on hood (2) of vehicle, and slide front edge of cab top (13) sideways into windshield channel (14) from either side of windshield (1).

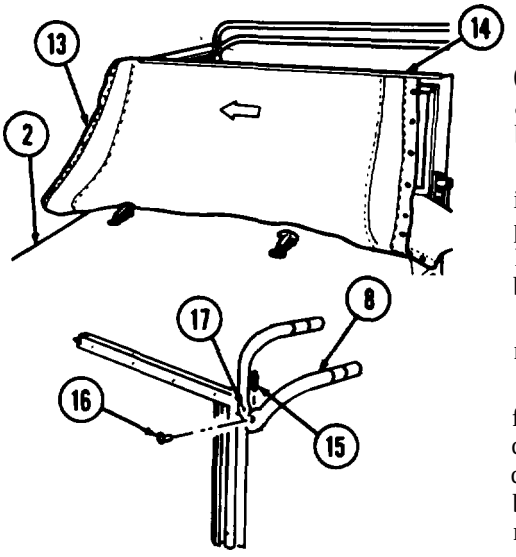


**i.** Pull cab top (13) towards rear of cab (12) over windshield (1), and crossbows (9) and (11). Place inner flap of cab top (13) between seats (10) and cab (12) wall.

**j.** Slide right and left edge of cab top ( 13) in right and left pillar post channels (21) and pull cab top down to back of cab ( 12). Make sure inner flap of cab top 13) slides behind seats (10) evenly.

**k.** Secure top edge of cab top (13) to roof rail (6) with turn-button-fasteners (18).

**l.** Remove retaining clip (15) and pin (16) from roof rail bow (8) and push movable crossbow (11) outward to take up slack of cab top (13). Push pin (16) through roof rail bow (8) and bracket (17) holes, and push retaining clip (15) through hole in pin (16).

**m.** Thread rope (20) through cab top (13) holes and around lashing hooks (19). Tie ends of rope (20) to last lashing hook (19) on each side of cab (12).

**n.** To remove cab paulin top (13), reverse steps e. through m.

**CAUTION**

Do not fold or stow paulin top when wet. Damage to paulin will result.

**o.** Clean and fold paulin top (13). Refer to paragraph 2-8 for paulin cleaning procedures.

**p.** When not in use, place crossbows (9) and (11) and pillar posts (7) in folded paulin top and stow under companion seat.

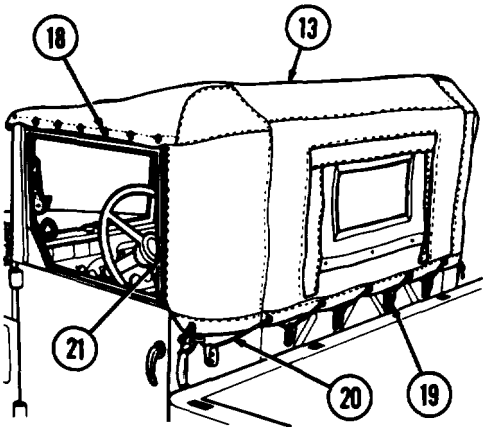


TA 094310

## 2-22. OPERATION OF FRONT WINCH

**WARNING**

**HIGH INTENSITY NOISE**

Hearing protection is required for all personnel working in and around this vehicle while vehicle engine is running.

**a. General.** Specified 5-ton, 6x6 trucks covered in the manual are equipped with front winch extension and front winch. The front winch is mounted on front of vehicle on support brackets attached to vehicle frame. Power for winch operation comes from a power takeoff mounted on the right side of the transmission. The power takeoff has high, low, and reverse gears, with neutral points between these gear positions. An internal automatic safety brake is used to hold winch load when power takeoff is being shifted. M816 and M819 vehicles have a level winding device and a cable tensioner assembly mounted on the top of front winch. When rewinding winch cable, the level winding device causes the cable to be wound tightly and evenly on the drum. When rewinding winch cable without a load on cable the cable tensioner assembly places tension on winch cable. This helps prevent kinks in winch cable.

**WARNING**

- Do not operate winch with a shear pin other than the aluminum pin shown in the parts list for the winch being used. Always stand clear of a winch cable under load. A snapped cable can cause serious injury.
- Do not wind out cable when attached to a load. Load must be wound in only.

**b. Preparation for Use:**

**(1)** Start engine; refer to paragraphs 2-12 and 2-13.

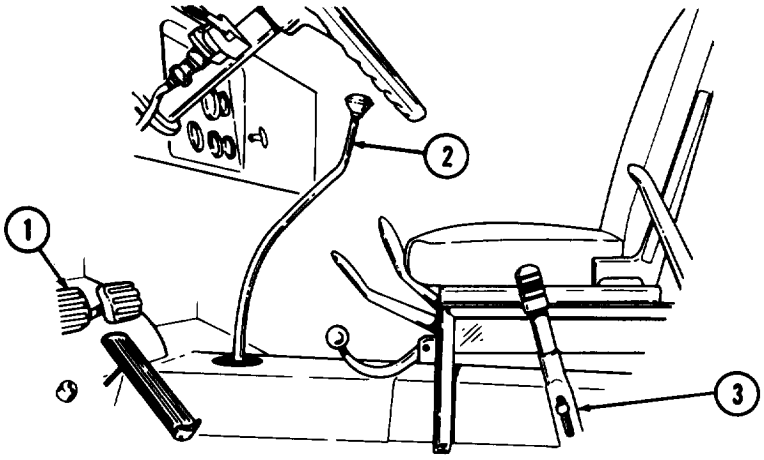


TA 094311

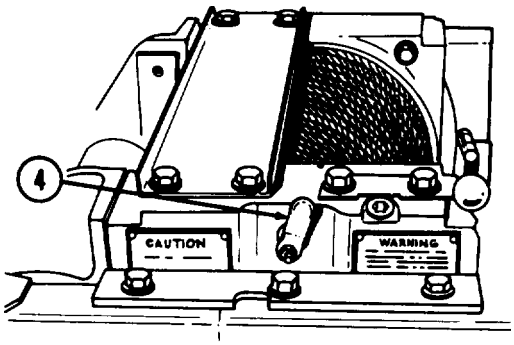


**(2)** Park vehicle directly facing object to be winched. Place gearshift lever (2) in "N" (neutral) position.

**(3)** Pull parking brake lever (3) up to engage.

**(4)** Depress clutch pedal (1). Press it all the way down. Place gearshift lever (2) in "N" (neutral) position. Let up on clutch pedal (1).

**(5)** Pull drum lock knob (4) all the way out, turn it 1/4-turn, and let it go. This lets drum turn freely so cable can be pulled out as much as needed.

**c. Unwinding Winch Cable.**

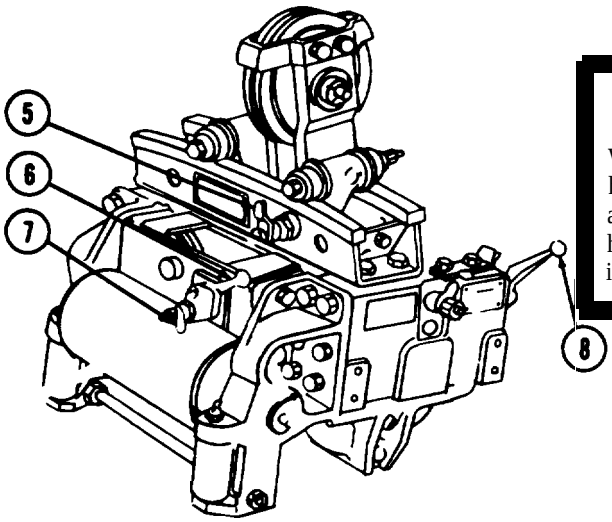


**WARNING**

Wear hand protection when handling winch cable. Do not allow cable to run through bare hands. Broken wires can cause injury.

**NOTE**

The following steps are to be used for M816 and M819 vehicles with level wind and tensioner assembly on the front winch.

**(1)** Pull the level wind lock knob (5) all the way out, turn it 1/4-turn, and release.

**(2)** Pull the tensioner lever latch (7) all the way out, turn it 1/4-turn, and release.

**(3)** Pull the tensioner lever (6) toward the left side of the vehicle as far as it will go.

**(4)** Engage drum jaw by moving drum clutch lever (8) away from winch.

TA 094312

**WARNING**

Always wear hand protection when handling winch cable. Never let cable run through bare hands. Broken wires can cause injury.

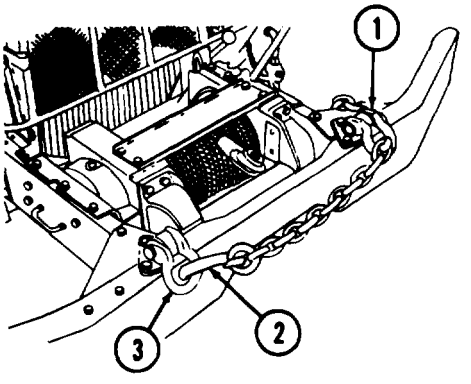


**(5)** Unhook winch cable chain hook (2) from right lifting shackle (3) and pass hook through left lifting shackle (1).

**CAUTION**

Leave at least four turns of winch cable on the drum. The cable clamp screw by itself will not hold cable around drum when a load is being pulled.

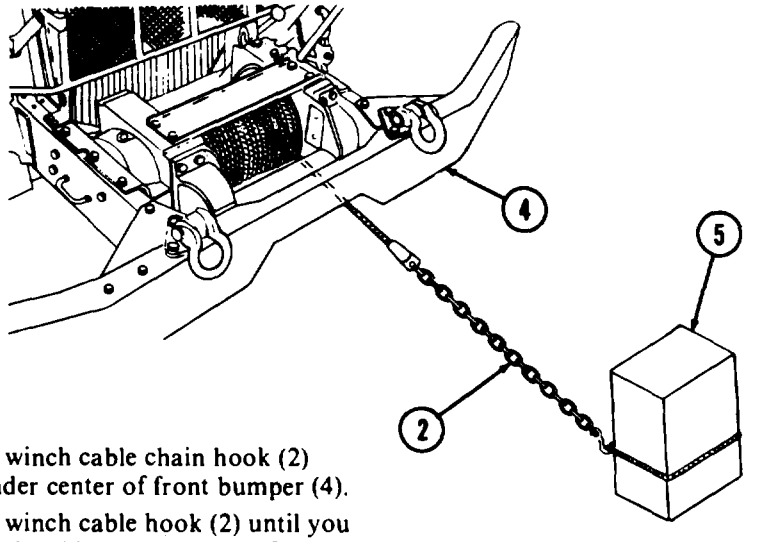


**(6)** Pull winch cable chain hook (2) down and under center of front bumper (4).

**(7)** Pull winch cable hook (2) until you unwind enough cable to reach load (5) that is to be pulled. An internal drag brake on the winch drum stops cable from unwinding too fast. Be careful not to kink cable.

TA 094313

**NOTE**

The following step is used only if vehicle winch cannot be place in direct line with load to be pulled or lifted.

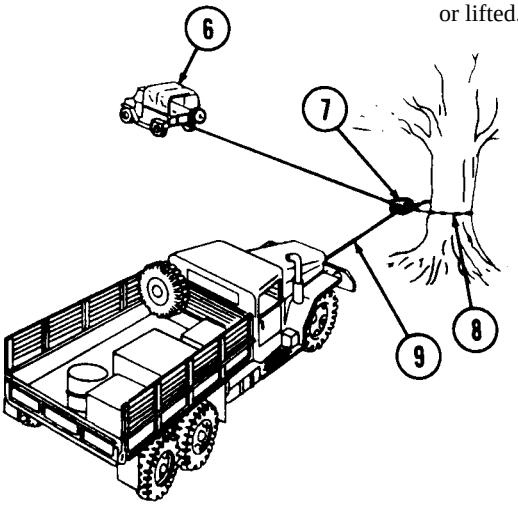


**(8)** If vehicle cannot be placed in direct line with load (6), attach snatch block (7) to winch cable (9) and secure with utiity chain (8).

**NOTE**

Medium wreckers (M816) have field chocks for heavy recovery operations (refer to paragraph 2-25).

**d. Pulling or Lifting Load.**

**WARNING**

- Engine speed must be set between 600-700 rpm's when operating the winch. Failure to comply may result in injury to personnel or damage to equipment.
- Direct all personnel to stand clear of winch cable. A snapped cable or shifting load can cause serious injuries.

**NOTE**

This operation is best accomplished by the operator and an assistant.

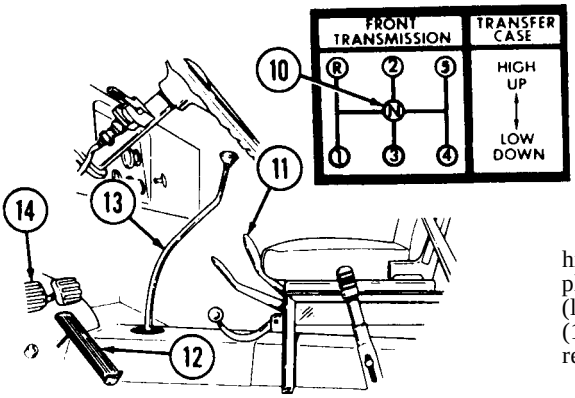


**(1)** Depress clutch pedal (14). Lift hinged locking plate on floorboard and place winch control lever (11) in "L" (low) position. Make sure gearshift lever (13) is in "N" (neutral) position (10) and release clutch pedal (14).

**(2)** Regulate winch operating speed by depressing accelerator pedal (12) or pulling out hand throttle control handle. Do not operate at excessive or erratic speed, which may cause an overload, resulting in broken winch shearpin.

**e. Stopping Winch.**

**(1)** Reduce engine speed by releasing accelerator pedal (4) or hand throttle.

**(2)** Depress clutch pedal (5) and place winch control lever (3) in N (neutral) position (1). Release clutch pedal (5).

**f. Lowering Load.**

**(1)** Depress clutch pedal (5) and place winch control lever (3) in R (reverse) position. Release clutch pedal (5). Be sure transmission selector lever (2) is in N (neutral) position (1).

**(2)** Depress accelerator pedal (4) to lower load.

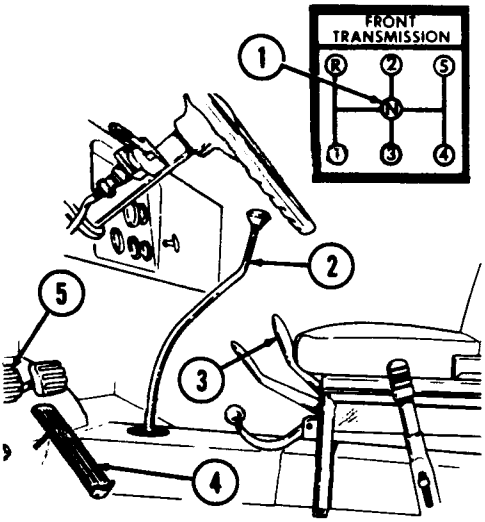


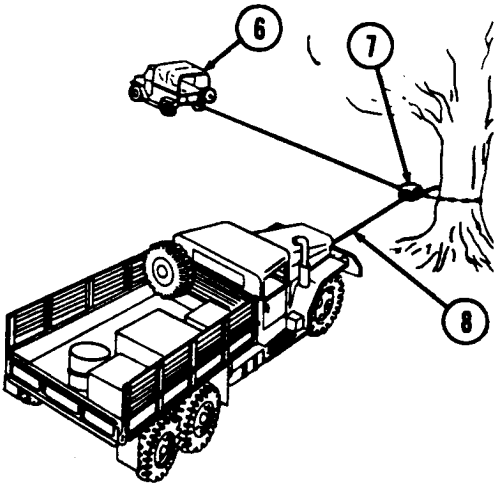


**g. Releasing Winch Chain.**

**(1)** Remove snatch block (7) from winch cable (8) if it was used.

**(2)** Complete winching operation, if necessary, and detach winch cable hook from load (6).

**h. Rewinding the Winch Without a Load.**

**(1)** Depress clutch pedal (5). Lift hinged locking plate on floorboard and place winch control lever (3) in “L” (low) position. Make sure gearshift lever (2) is in “N” (neutral) position (1) and release clutch pedal (5).

**(2)** Regulate winch operating speed by depressing accelerator pedal (4) or pulling out hand throttle control handle. Do not operate at excessive or erratic speed, which may cause an overload, resulting in broken winch shearpin.

**(3)** Have crewmember maintain manual tension on winch cable (8) and wind excess cable on winch drum at slow speed. Stop winch operation as cable chain approaches drum.

**i. Preparing Winch for Travel.**

**(1)** On winches without level wind, position cable chain (12) under and over the left frame extension (9), then across the top of the bumper (11), so the chain hook (13) can be attached to the right lifting shackle (14). Remove left lifting shackle (10) and place it over chain, then reinstall lifting shackle (10).

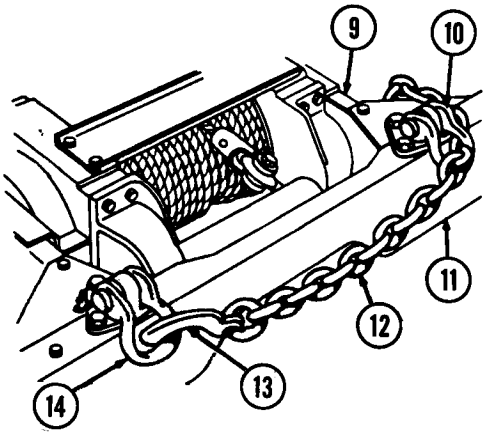


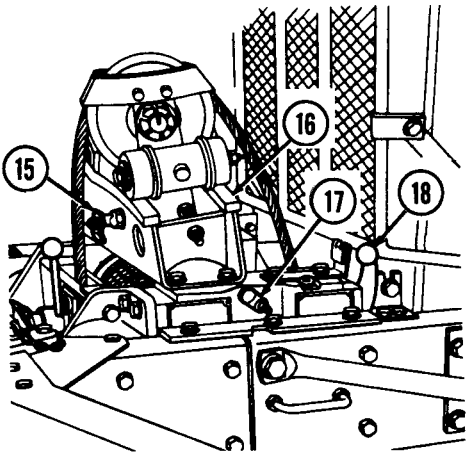


**(2)** On winches with level wind,pull cable chain (12) up through the space between the bumper (11) and winch on the left side. Wind cable chain around back of the level winding frame, then across the front so the chain hook (13) can be attached to the left side of the level winding frame.

**CAUTION**

Do not force clutch drum lever to free clutch. Engage power takeoff in forward or reverse gear, as required, and slip engine clutch slightly.

**(3)** Disengage drum jaw clutch by moving drum clutch lever (18) as far as it will go toward the winch. Swing hinged plate down to lock drum clutch lever (18).

**(4)** Lock drum in place with drum lock knob (17) by pulling knob out, rotating it 90 degrees, and releasing. If necessary, rotate drum by hand to allow drum lock plunger to engage hole in winding frame.

**(5)** On winches with level wind, release lock by pulling lock knob (15) out. Rotate it 90 degrees and release. If necessary, move level wind (16) by hand to allow lock plunger to engage hole n winding frame.

**(6)** Swing hinged holding plate on headboard down and around winch control lever (3) to secure lever in place.

**(7)** Service snatch block and other equipment used in winching and stow.

**(8)** to replace winch shear pin; refer to paragraph 3-17.

## 2-23. OPERATION OF CARGO TRUCKS

**a. General.** M813 and M813A1 cargo trucks have 7 x 14-foot (2.14 x 4.27 meters) cargo beds. M814 cargo trucks have 7 x 20-foot (2.14 x 6.1 meters) beds. All can be equipped with troop seat and paulin kit.

**b. Lowering Tailgate.**

**WARNING**

On dropside trucks, make certain locking handles at forward end of dropsides are engaged before lowering tailgate to prevent injury.

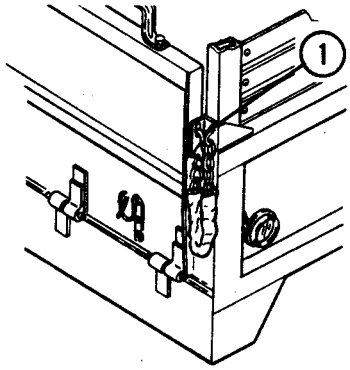


**(1)** Remove hooks (1) from retainer slots on both sides of tailgate.

**(2)** Grasp top of tailgate and pull it back. Do not allow tailgate to drop.

**(3)** On dropside trucks, turn locking handles (3) on sides of tailgate counterclockwise to loosen. Grasp ring (2) and twist to turn T-bolt (4) vertically up. Withdraw locking handle assembly. Do the same operation on the opposite end of tailgate.

**(4)** Grasp top of tailgate and pull it back. Do not allow tailgate to drop.

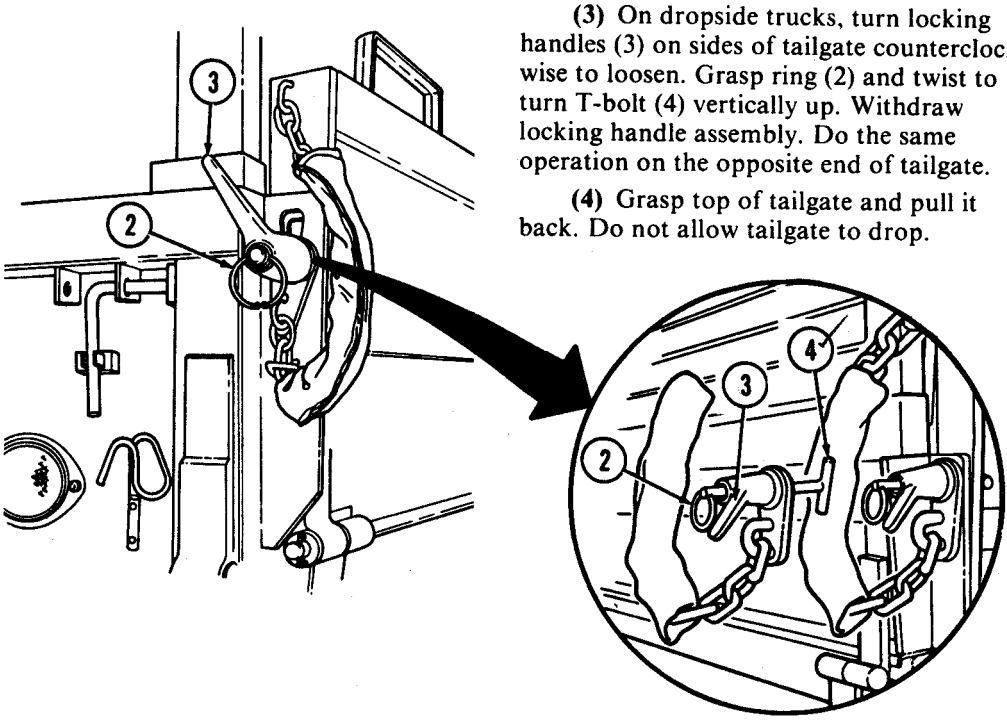


**c. Lowering and Raising Troop Seats.**

**(1)** To lower troop seats, pull troop seat supports (8) forward 45 degrees, release latches (7), and lower seats.

**(2)** Adjust each troop seat support (8) to contact both the side and floor of the truck.

TA 094520

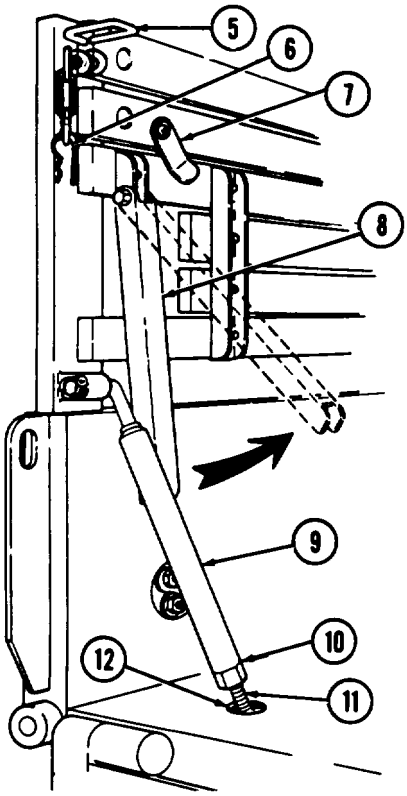


(3) On dropside trucks, install troop seat locking rods (9) in hole (12) near tailgate. Locking rod (9) can be shortened or lengthened. To adjust locking rod:

(a) Loosen locknut (10).

(b) Turn threaded end (11) clockwise to shorten, counterclockwise to lengthen.

(c) Tighten locknut (10).

(4) To raise troop seat, reverse procedure just given.

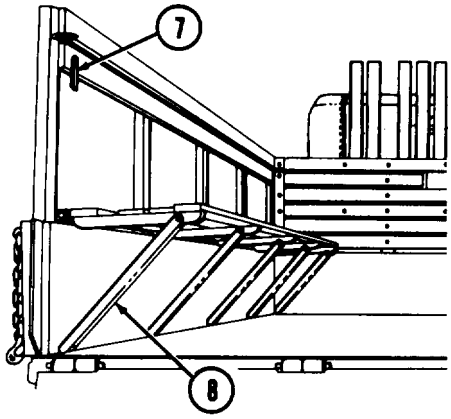


**d. Removing Front and Side Racks.**

(1) Lower tailgate. Refer to b. above, if necessary.

(2) Raise troop seats and secure in place with latches (7). Refer to c. above, if necessary.

**(3)** On dropside trucks:

**(a)** Remove troop seat locking rods (9) from holes near tailgate. Install safety pin (6) to secure locking rods (9) to side rack bracket (5).

**(b)** Pull back four troop seat securing pins (13) from corners of truck bed.

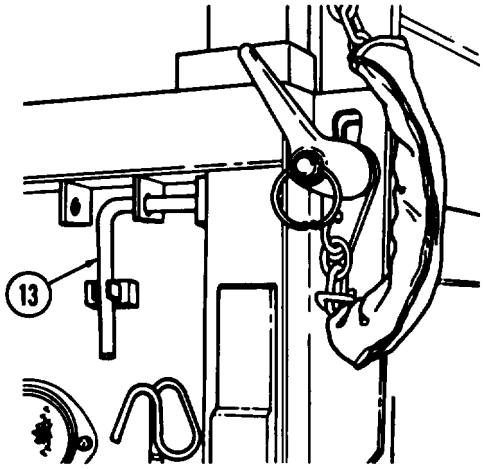


TA 094317

**(4)** Lift and remove front rack (2).

**NOTE**

This operation requires two crewmembers.

**(5)** Lift and remove side racks (1).

**e. Installing Front and Side Racks.**

**(1)** Reverse procedures (1) through (5) in d.

**(2)** When installing front rack (2), be sure front rack retainer clip (3) is inserted in side rack rings (4).

**f. Lowering and Raising Dropsides.**

**(1)** Park vehicle where it can best be loaded or unloaded. Turn ignition switch and battery switch levers to OFF and apply parking brake.

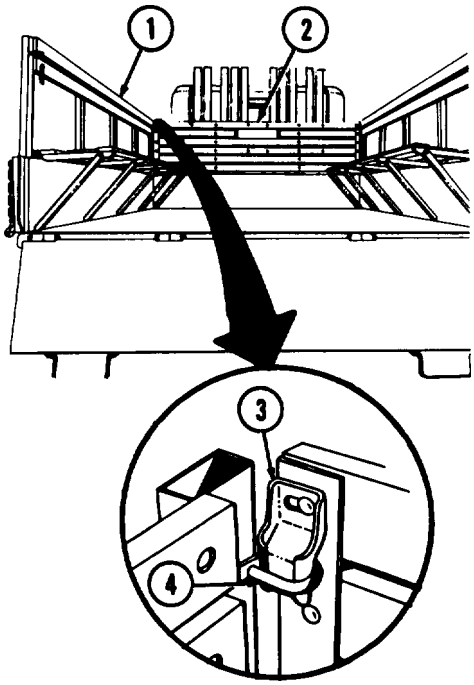


**(2)** Turn locking handle (6) counterclockwise to loosen. Grasp ring (8) and twist to turn T-bolt (7) in vertical up position. Remove locking handle (6) and repeat operation on opposite end of dropside.

**WARNING**

Make sure troop seat securing pins (5) are engaged before lowering dropside to prevent injury.

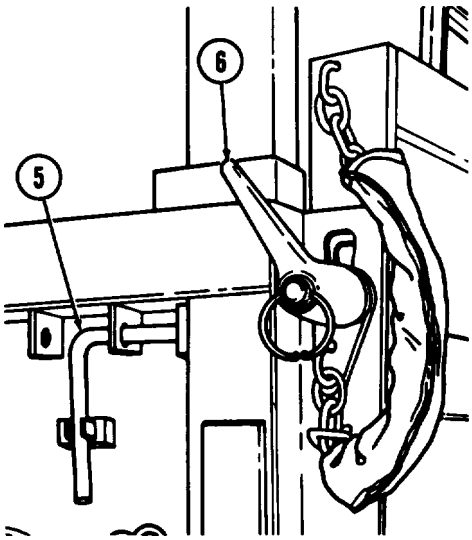


**NOTE**

This operation requires two crewmembers.

**(3)** Grasp side rack (1) and carefully lower dropside.

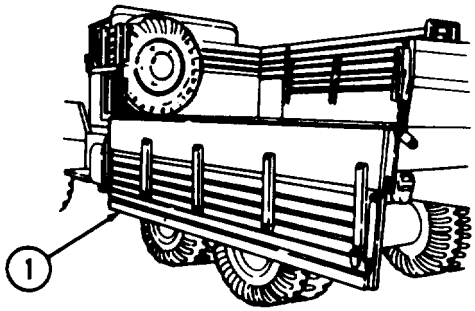


TA 094318

**WARNING**

Make sure forward ends of dropsides are both secured before lowering tailgate. Severe injury can result.

**(4)** To load from both sides;

**(a)** Lower tailgate.

**(b)** Remove locking handle (6) on right side. Lower right dropside. Repeat operation on left dropside.

**(5)** To raise dropside:

**(a)** Raise dropside and install T-bolt (7) at forward end. Place T-bolt (7) in slot, turn 90 degrees, and hold in position with ring (8). Turn locking handle (6) clockwise to tighten.

**(b)** Raise opposite dropside and secure it in position.

**(6)** Raise tailgate and install left rear and right rear locking handles (6).

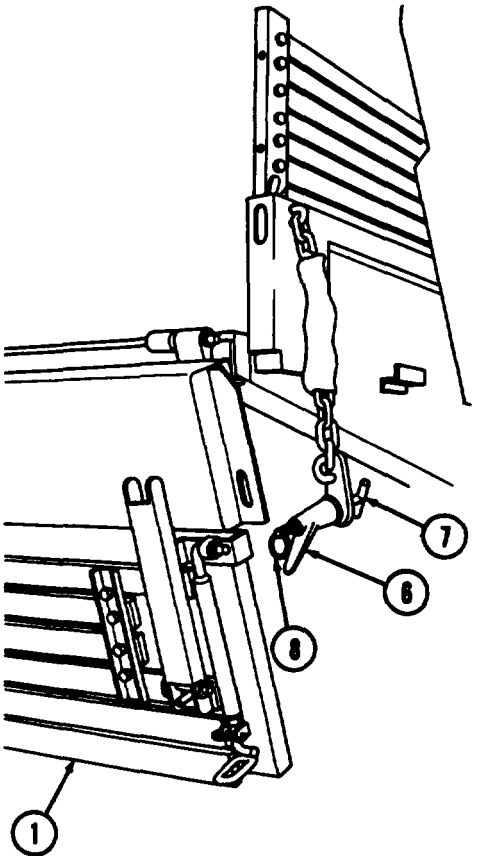


**g. Loose Projectile Restraint System (LPRS).** The Loose Projectile Restraint System (LPRS) provides a fast, simple method of securing "loose" unfuzed 155 mm projectiles for transport in field artillery companion vehicles. These "egg crate" module racks may be assembled in 9-round, 15-round, and 25-round sets and are restrained in the cargo bed by authorized tiedown straps. Refer to TM 9-2590-210-10 for complete instructions.

TA 094319

## 2-24. OPERATION OF BOLSTER TRUCKS AND TRAILERS

**WARNING**

**HIGH INTENSITY NOISE**

Hearing protection is required for all personnel working in and around this vehicle with the engine running.

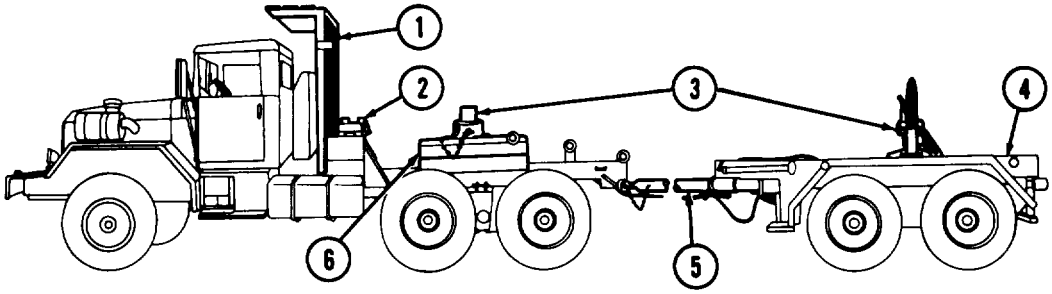


**a. General.** M815 bolster trucks are equipped with a cab protector (1), midships winch (2), bolster assembly (3), and fifth wheel assembly (6). M796 bolster trailer (4) has an adjustable reach (5) with safety chains. Truck and trailer combination is designed to haul utility poles, logs. or bridge sections. The trailer is carried on the truck when not in use. More information for trailer operation is contained in TM 9-2330-287-14.

**b. Unloading Bolster Trailer from Bolster Truck.**

**NOTE**

Two crewmembers are required for virtually every operation involving the truck bolster and trailer.

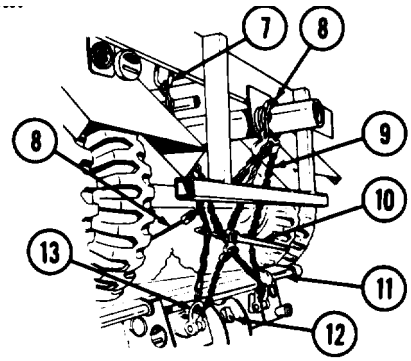


**(1)** Position bolster truck on level grade. Apply parking brake (27) and stop engine; refer to paragraph 2-16.

**(2)** Remove chain binder (10) at rear of vehicle. Remove tiedown chain (9) from lifting shackles (7) of bolster trailer (4) and towing shackles (13) of bolster truck.

**(3)** Grasp ring (16) of L-bolt (17) and turn handle (15) counterclockwise to loosen. After loosening, turn L-bolt (17) until it drops down through retaining slots in ramps. Repeat same procedure on opposite end.

**(4)** Remove ramps (14) from catwalk (18) and install at rear of bolster truck in mounting brackets (11) attached to rear support of bolster trailer carrier.

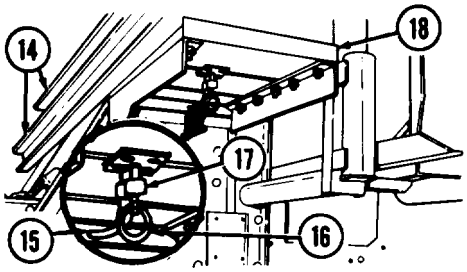


**(5)** Remove chain binder ( 10) and tie-down chain (9) at front of bolster trailer (4).

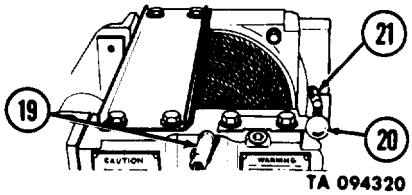

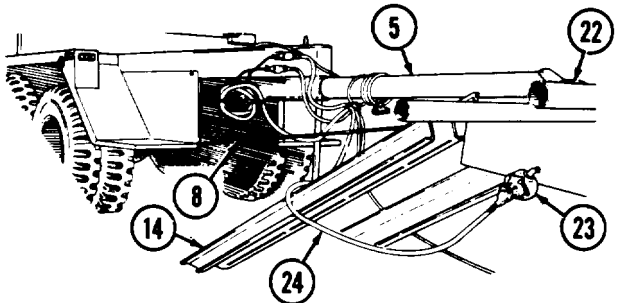


**(6)** Remove air hoses (24) from stowed position and between dual wheels of bolster trailer (4) and position along sides of bolster truck.

**WARNING**

Failure to turn on air shutoff valves will result in loss of brakes on towed vehicle. This may cause injury to personnel.

**(7)** Start engine (refer to paragraphs 2-12 and 2-13) and open right rear trailer coupling air valve (23) to release failsafe brakes on bolster trailer (4).

**(8)** Release winch drum lock by pulling drum lock knob (19) out all the way, rotating 90 degrees and releasing.

**(9)** Engage winch drum clutch by lifting hinged lock (21) and pulling drum clutch lever (20) away from winch as far as it will go.

**CAUTION**

Do not disengage transfer power takeoff control (29) when transfer selector lever (28) is operating in neutral. This could cause transfer bearing failure.

**(10)** Start engine, disengage clutch pedal (30), and position gearshift lever (25) in "3" (third) gear (26). Place transfer selector lever (28) in "N" (neutral) position.

**CAUTION**

Exercise care when lunette (22) of reach (5) clears rear of bolster truck frame to prevent damage to the electrical connector cover (12).

**(11)** Pull transfer power takeoff control lever (29) to engaged position and engage engine clutch (30) momentarily. This will cause bolster trailer front wheels-to start climbing the bolster (3). Disengage engine clutch (30) quickly, place gearshift lever (25) in 'R" (reverse) position, and engage engine clutch (30). The winch cable (8) will begin to unwind and the bolster trailer (4) should start to back off the bolster carrier and down the ramps (14).

**(12)** Slow winch unwind operation as reach (5) of bolster trailer (4) approaches rear support of trailer carrier.

**(13)** Lock bolster trailer brakes by closing right rear trailer coupling shutoff air valve (23) on the bolster truck.

TA 094321

**(14)** Remove midships winch cable chain (2) from reach support tube (1) at bolster trailer rear.

**CAUTION**

Do not disengage transfer power takeoff lever (5) when transfer selector lever (4) is operating in "N" (neutral). This could cause transfer bearing failure.

**(15)** With engine running, depress clutch pedal (6) and place gearshift lever (3) in "3" (third) gear position (7). Place transfer selector lever (4) in "N" (neutral) position. Pull transfer power takeoff control lever (5) up as far as it will go to engaged position. Release clutch pedal (6) and begin rewinding midships winch cable (2).

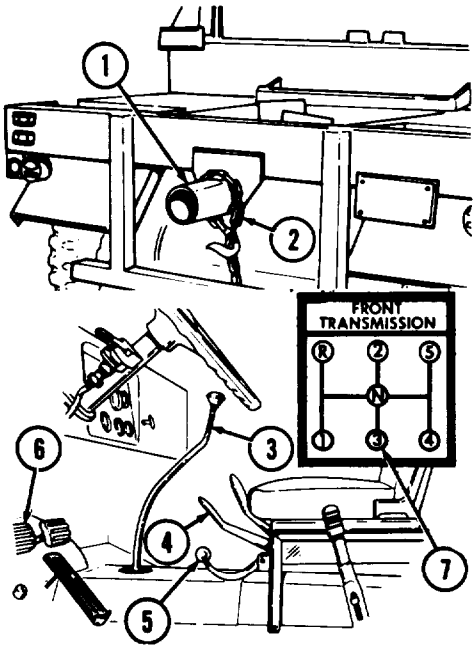


**(16)** Stop rewind as cable chain (2) nears midships winch by disengaging engine clutch (6) and shifting transfer power takeoff control lever (5) down to disengaged position. Place gearshift lever (3) in "N" (neutral) position and release clutch pedal (6). Attach winch cable (2) to fifth wheel base.

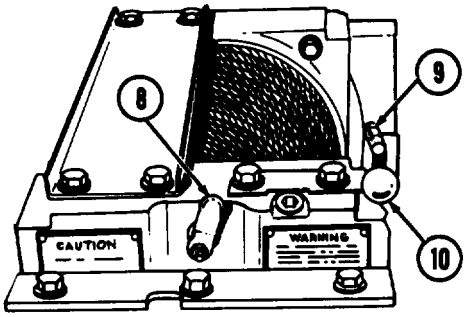


**(17)** Disengage winch drum clutch by pushing drum clutch lever ( 10) toward winch as far as it will go. then swing hinged lock (9) down. Lock winch drum by pulling drum lock knob (8) out, rotating it 90 degrees. alining lock plunger with one of holes in drum flange. and releasing knob (8).

**(18)** Remove ramps (11) and place on catwalk (15) over midships winch. Secure ramps (11) in stowed position by pushing L-bolts (14) up through retaining slots (24) in ramps (11). turning L-bolts (14) 90 degrees. grasping ring (13) and turning handle (12) clockwise to tighten.

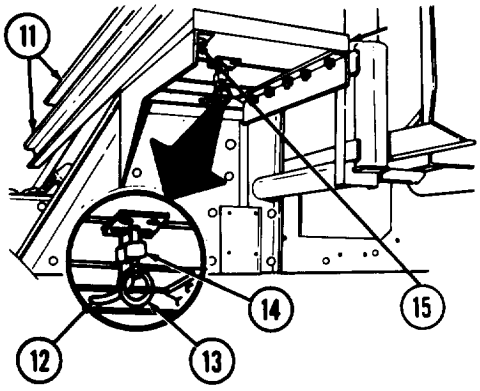


TA 094322

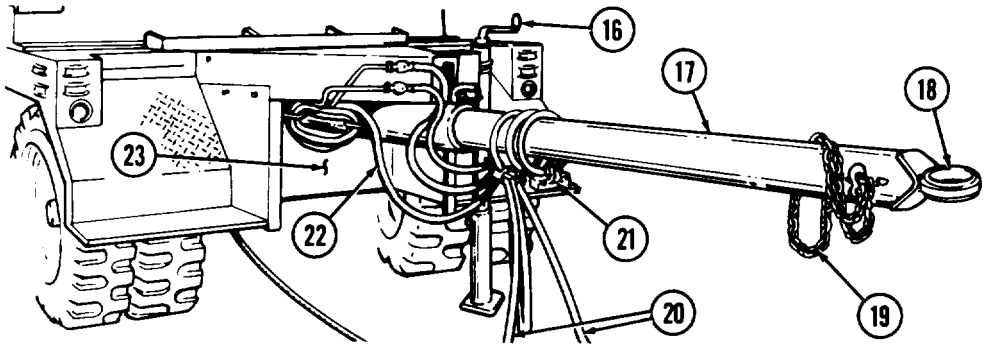


**(19)** Install intervehicular electrical cable (22) and two air hoses (20) in the front three retaining rings (21) on reach (17). Install electrical cable (22) in electrical connector (25) above the bolster truck pintle.

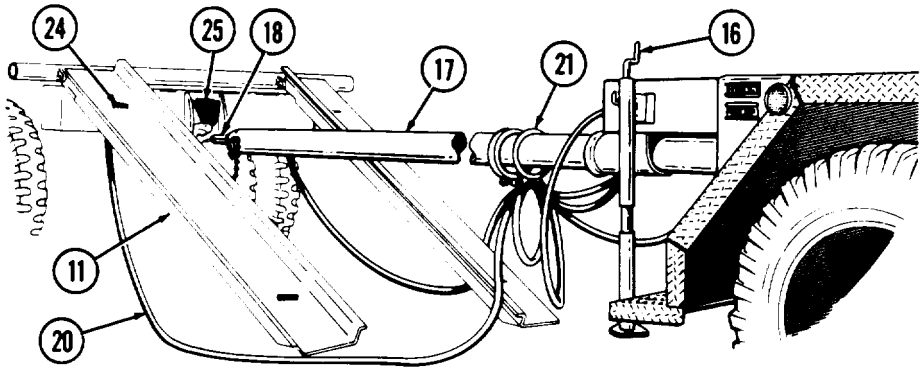


**NOTE**

It may be necessary to raise lunette (18) manually or with bolster trailer landing leg (16) to aline lunette (18) with pintle.

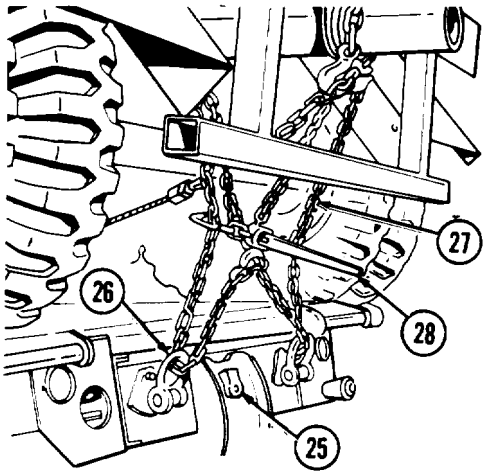


**(20)** Install bolster trailer lunette (18) on bolster truck pintle. Close pintle and install cotter pin to secure pintle in locked position. Install safety chain (19) attached to reach (17) near lunette (18) to towing shackles (26) of bolster truck.

**(21)** Place chain binders (28) and tiedown chains (27) in stowage compartment (23) of bolster trailer.

**(22)** Check operation of bolster failsafe brakes and lighting system before loading bolster truck and trailer with utility poles. logs, or bridge equipment.

TA 094323

**c. Preparing Bolster Truck and Trailer for loading Cargo.**

(1) Position bolster truck and trailer on a level surface.

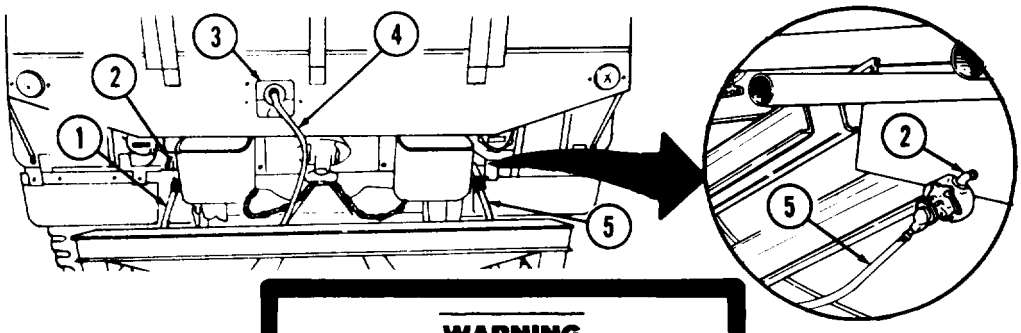


**WARNING**

Failure to completely turn off air shutoff valves will result in loss of vehicle brakes. This may cause injury to personnel.

**NOTE**

Disconnection of emergency air hose (5) activates failsafe trailer brakes.

**(2)** Close emergency hose (5) and service hose (1) air valves (2) and disconnect hoses from fittings on rear of vehicle. Disconnect intervehicular cable (4) from vehicle receptacle (3).

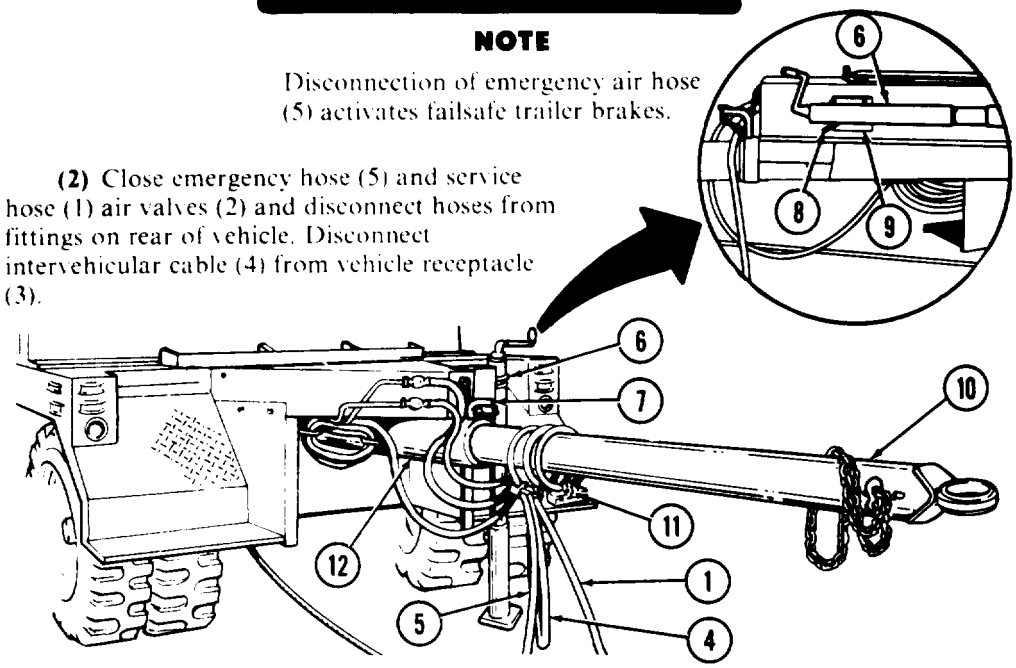


**(3)** Before extending or retracting trailer reach (10). disconnect brake air hoses (1) and (5) and electrical cable (4) from retaining rings (11) at rear of bolster truck.

**(4)** Couple trailer to towing vehicle. Pull retaining pin (7) and extend or retract trailer reach (10) to desired length. Aline hole in frame (12) with hole in reach, and install retaining pin (7).

**WARNING**

Failure to turn on air shutoff valves will result in loss of brakes on towed vehicle. This may cause injury to personnel.

TA 094324

**(5)** Reroute air hoses (1) and (5) and electrical cable (4) beneath trailer. Reconnect to retaining rings (11) on reach (10) and to same fittings on rear of towing vehicle. Start engine and open emergency hose (5) and service hose (1) air valves (2). releasing trailer brakes. Secure slack in hoses and cable to prevent dragging.

**(6)** Lower landing leg (6) by pulling out spring-loaded locking pin handle (9). Swing leg (6) downward 90 degrees so locking pin (8) will engage landing leg (6) in lowered position.

**NOTE**

Bolster truck and trailer are now ready for loading cargo.

**d. I.oading or Unloading Bolster Truck and Trailer.**

**(1)** Methods used to load or unload cargo depend on the type of load and available equipment.

**WARNING**

- Direct all personnel to stand clear of winch cable. A snapped cable or swinging load can cause injuries.
- Always wear hand protection handling winch cable. Never allow cable to run through bare hands. Broken wires can cause injuries.

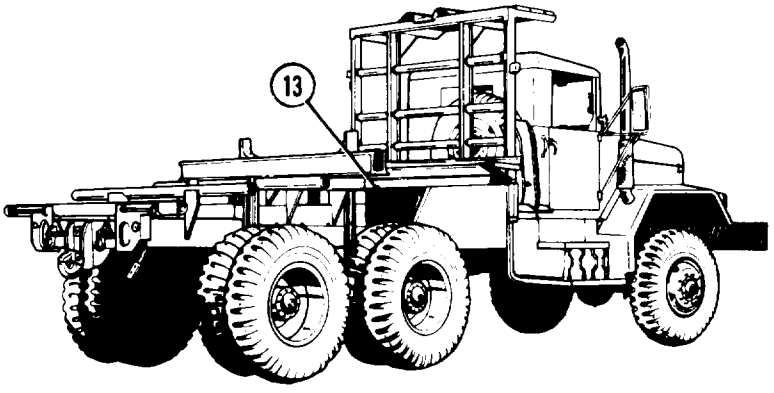


**(2)** The midships winch (13) and front winch can be used for loading and unloading. Controls for both winches are identical. Refer to paragraph 2-22 for front winch operation.

**(3)** If available, a wrecker crane also can be used to load or unload the bolster truck and trailer. Refer to paragraph 2-28 as required for procedures.

**(4)** Secure cargo with cables, chains, or by other methods to prevent cargo from coming loose or shifting. This is particularly important for cross-country movement.

**(5)** Raise landing leg (6) by removing locking pin (8) and pulling up into spring-loaded locking pin handle (9) before moving bolster truck and trailer.

**(6)** Lower landing leg (6) before unloading cargo. See step c. above.

TA 094325

**e. Loading Bolster Trailer on Bolster Truck.**

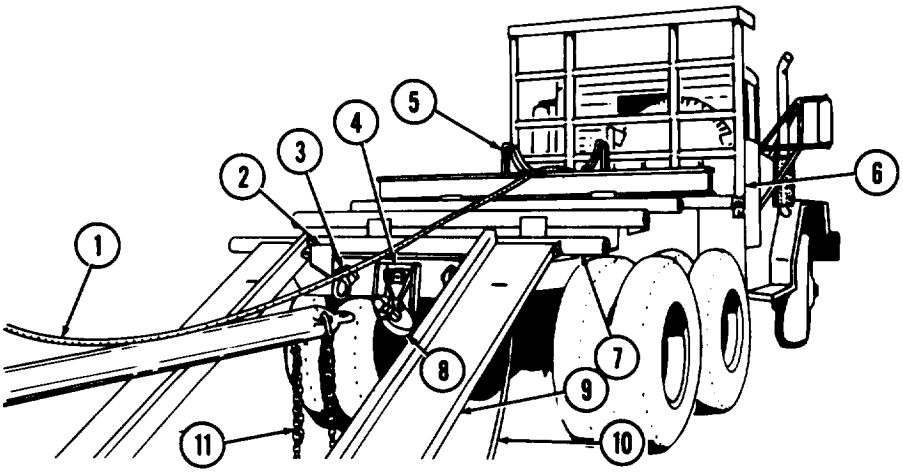


**(1)** Place bolster truck and trailer on level ground. Apply parking brake (13) and stop engine (refer to paragraph 2-16). Shorten reach as required [refer to c.(3) and c.(4) above].

**(2)** Remove cotter pin from truck pintle (8). Release lock and open pintle.

**(3)** Disconnect safety chains (11) from rear towing shackles (3).

**WARNING**

Use care not to pinch or cut brake hose (10). which may result in injury to personnel and damage to equipment.

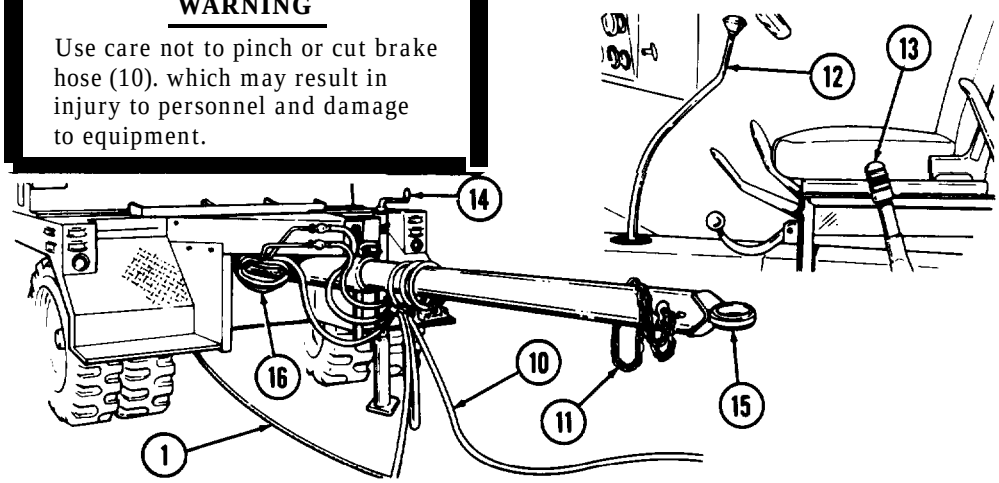


**(4)** Turn landing leg hand crank (14) clockwise until bolster trailer lunette (15) is free of bolster truck pintle (8).

**(5)** Remove intervehicular electrical cable (6) from bolster truck electrical connector (4), directly above opened pintle (8). Stow electrical cable (16) on storage rack on bolster trailer.

**(6)** Start engine, release parking brake (13), and drive bolster truck forward approximately 2 feet (.61 meters). Apply parking brake (13) and place gearshift lever (12) in "N" (neutral) position.

TA 094326

**(7)** Grasp ring (18) of L-bolt (19) and turn handle (17) counterclockwise to loosen. After loosening, turn L-bolt (19), until it drops down through retaining slots in ramps (9). Repeat same procedure on opposite end.

**(8)** Remove ramps (9) from catwalk (6) and install at rear of bolster truck, in mounting brackets (2) attached to the rear support of the bolster trailer carrier (7).

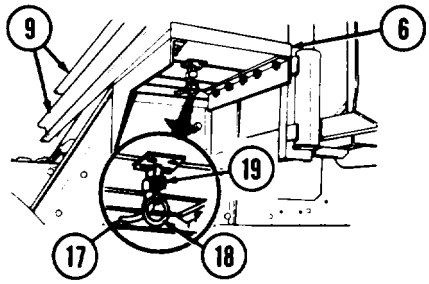


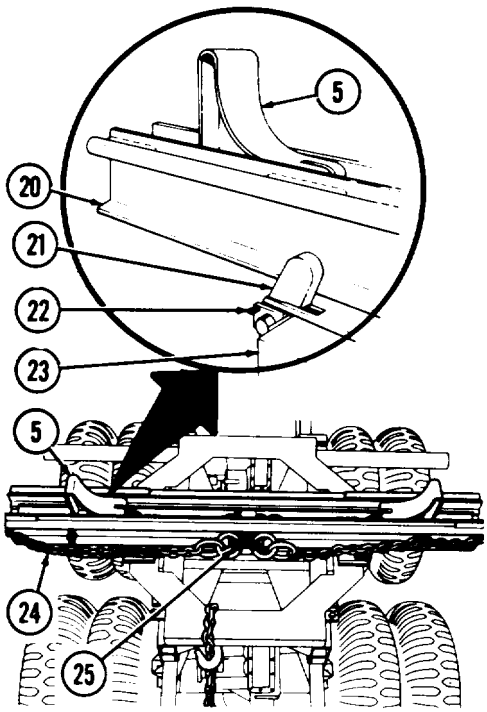


**NOTE**

Make sure bolster travel locks (21) on both sides of the bolster truck fifth wheel (23) are engaged and secured with cotter pins (22). This prevents movement of truck bolster (20).

**(9)** Move bolster sliding chocks (5) inward by lifting adjusting chains (24) free of chain hooks (25) and pulling outward on chains (24).

**(10)** Divide slack in adjusting chains (24) evenly and reinstall in chain hooks (25).

**NOTE**

Bolster sliding chocks (5) must be centered to permit forward wheels of bolster trailer to contact truck bolster (20) when loaded.

**(11)** Release winch drum lock by pulling out lock knob (26), rotating it 90 degrees, and releasing drum (27). Drum (27) should turn.

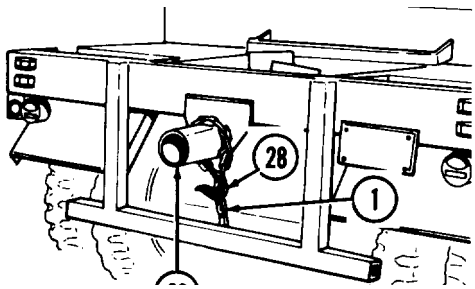


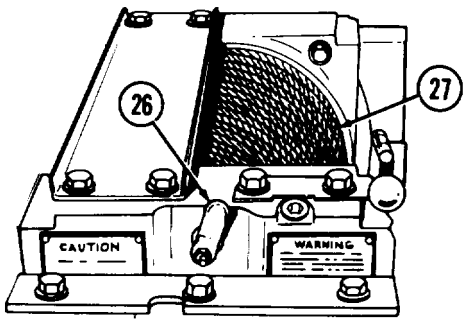


**(12)** Unhook winch cable chain hook (28) from cable chain (1) and free chain from fifth wheel (23).

**(13)** Pull on chain (1) to unwind cable from drum (27). Pull cable and chain over top of truck bolster (20), down and under bolster trailer, to the rear of reach support tube (29). Attach cable chain (1) to reach support tube (29).

TA 094327

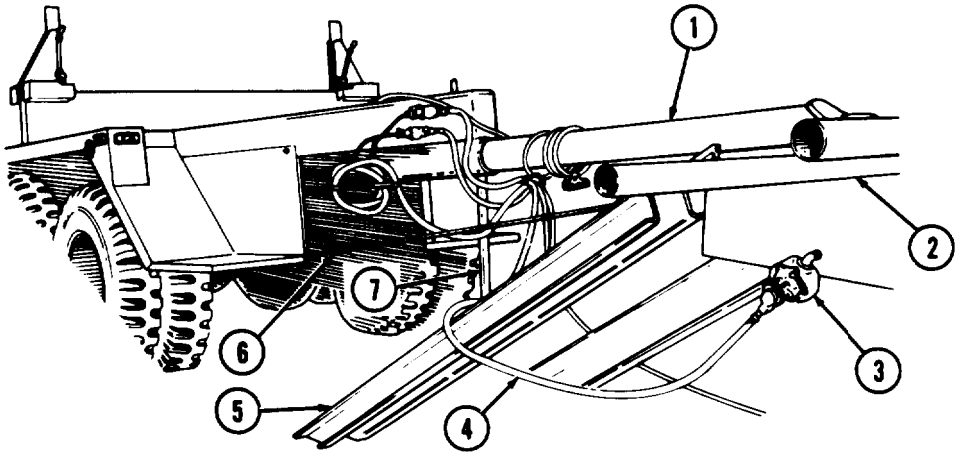


**(14)** Position air hoses (4) on either side of ramps (5).

**(15)** Pull out drum lock knob (8) on midships winch, rotate it 90 degrees, and release to unlock winch drum.

**(16)** Lift hinged lock (9) and pull drum clutch lever (10) away from winch as far as it will go.

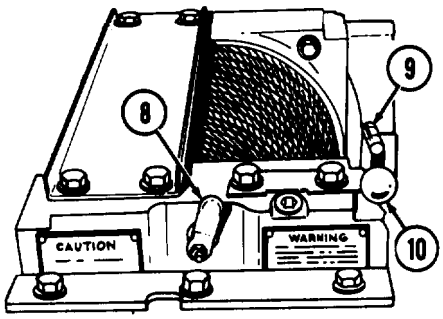


**CAUTION**

- If rewind of midships winch cable (6) proceeds too quickly, reach (1) will slam down on cab protector (23) when rear wheels of bolster trailer are on top of ramps (5), resulting in damage to cab protector (23).
- Do not disengage transfer power takeoff lever (14) when transfer (13) is operating in neutral. Transfer bearing failure will result.

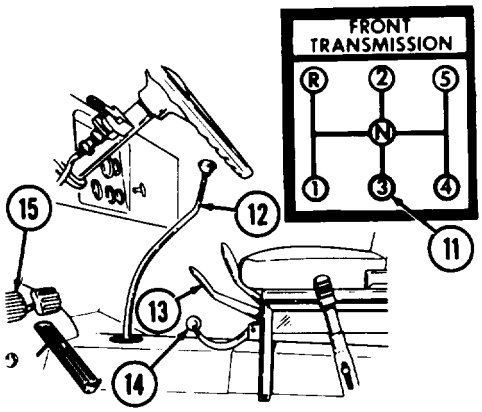


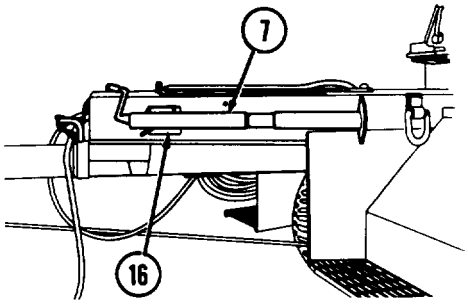


TA 094328

**(17)** Start engine (refer to paragraphs 2-12 and 2-13). Depress clutch pedal (15) and place gearshift lever (12) into “3” (third) gear (11). Place transfer selector lever (13) in "N” (neutral) position. Pull transfer power takeoff control lever (14) up as far as it will go to engaged position.

**(18)** Release clutch pedal (15) and begin rewinding midships winch cable (6). As lunette (1) of bolster trailer passes over the rear of bolster trailer carrier (2), retract landing leg (7), and release locking pin handle (16).

**(19)** Rotate landing leg (7) 90 degrees counterclockwise and lock it in stowed position.

**(20)** Continue rewind of midships winch cable (6). Slow down rewind as rear wheels of bolster trailer approach top of ramps (5).

**(21)** Stop winch operation when front wheels of bolster trailer come into contact with truck bolster by moving power takeoff control lever (14) down to disengaged position.

**(22)** Disengage winch drum clutch by pushing drum clutch lever (10) toward winch as far as it will go. Swing hinged lock (9) down.

**(23)** Lock winch drum by pulling out lock knob (8), rotating it 90 degrees alining lock plunger with hole in drum flange, and releasing knob (8).

**(24)** Stop engine. Close trailer air coupling cutout cock (3) on right rear corner of bolster truck to apply brakes on bolster trailer.

**(25)** Place air hoses (4) between dual wheels on either side of bolster trailer to prevent entanglement when vehicle is moved.

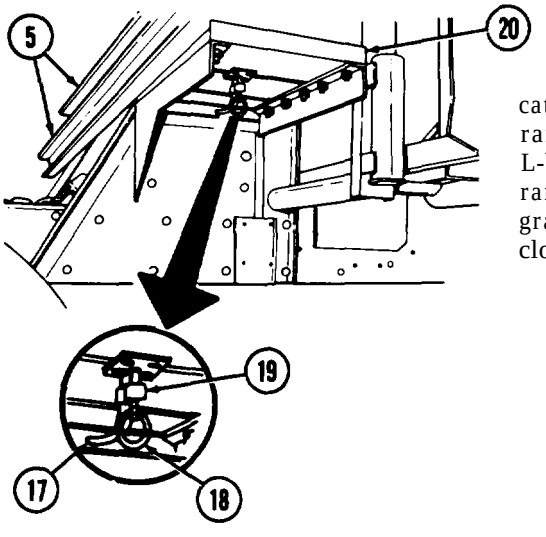


**(26)** Remove ramps (5) and place on catwalk (20) over midships winch. Secure ramps (5) in stowed position by pushing L-bolts (19) up through retaining slots in ramps (5), turning L-bolts (19) 90 degrees, grasping ring (18), and turning handle (17) clockwise to tighten.

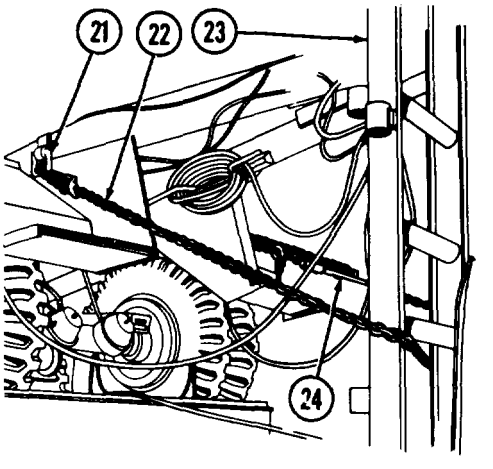


**(27)** Remove two tiedown chains (22) and two chain binders (24) from bolster trailer stowage compartment. Secure bolster trailer front to cab protector (23) with one tiedown chain (22) attached to front lifting shackles (21), then wrap chain (22) around cab protector (23). Tighten tiedown chain (22) with chain binder (24).

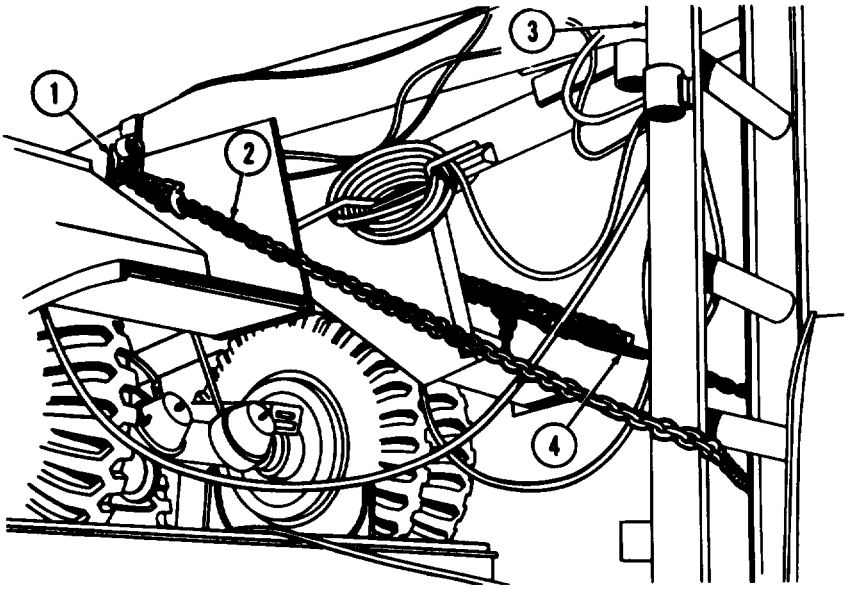


**NOTE**

Tiedown chain secures trailer front for highway travel. For cross-country travel, position tiedown chain (2) diagonally between bolster trailer and cab protector (3), then tighten with chain binder (4).

**(28)** Secure rear of bolster trailer to bolster truck by attaching tiedown chain (2) through lifting shackles (1) of bolster trailer and towing shackles (5) of bolster truck. Tighten tiedown chain (2) with chain binder (4).

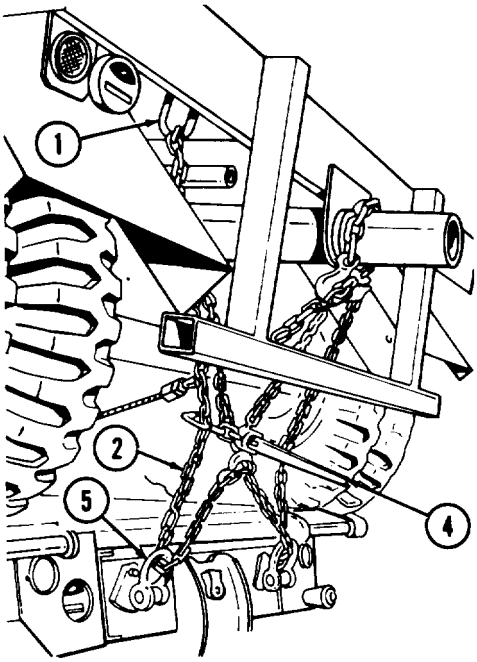


TA 094330

## 2-25. OPERATION OF MEDIUM WRECKER REAR WINCH

**WARNING**

**HIGH INTENSITY NOISE**

Hearing protection is required for all personnel working in and around this vehicle with the engine running.

**a. General.** The M816 medium wrecker has a hydraulically-operated crane and two winches (front and rear), each equipped with a level winding device. The front winch is mainly for pulling out the wrecker when it becomes stuck or is used as an anchor point when rear winch is in use. The rear winch is used for heavy-duty operations because of its heavy pulling capability. The crane can be extended from 10 to 18 feet (3.05 to 5.49 meters) and is used for lifting loads up to 10 tons (9.1 metric tons).

**b. Front Winch Operation.** Refer to paragraph 2-22.

**c. Rear Winch Operation.**

**(1)** Position wrecker to aline rear winch (6) with load (7) to be winched, if possible.

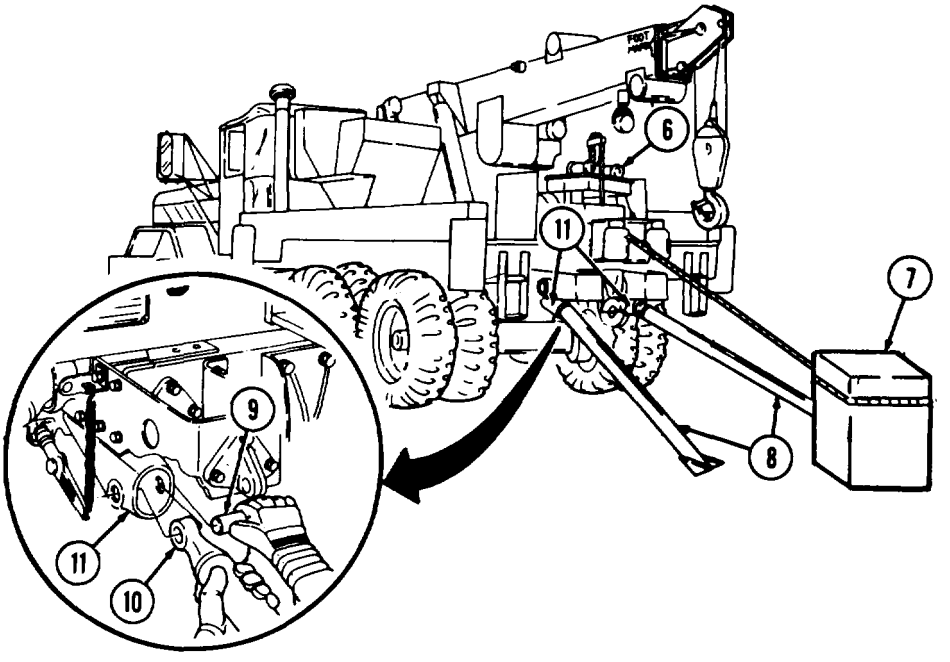


**(2)** For heavy pulls, install field chocks (8), Perform the following

**(a)** Remove chocks (8) from storage area at rear of wrecker body.

**(b)** For direct pulls, install chocks (8) facing load (7) in left and right chock brackets (11). Insert pin (9) through bracket (11) and yoke (10) to secure each chock in place.

TA 094331

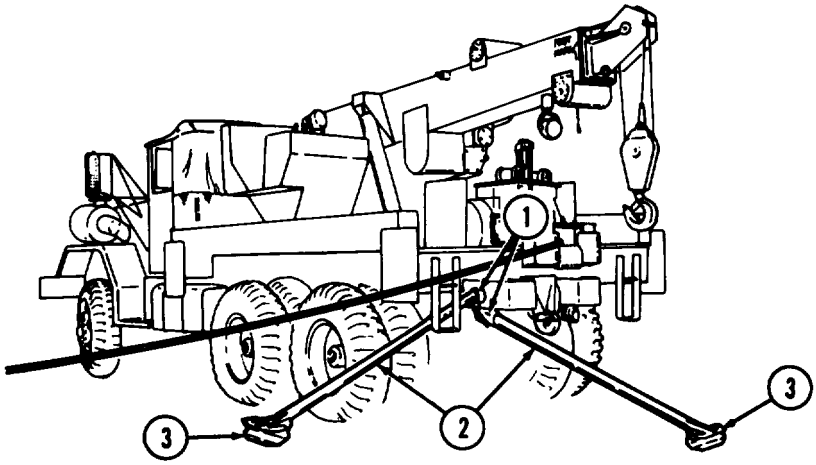


**(c)** For indirect pulls on left side, install chocks (2) in anchors (1) on left side frame. For right side pulls, install chocks in anchors on right side frame.

**(d)** Dig two 12-inch (30 centimeters) holes at spade end (3) of chocks (2). Insert chock spade ends (3) in holes.

TA 094332

**d. Unwinding the Winch Cable.**

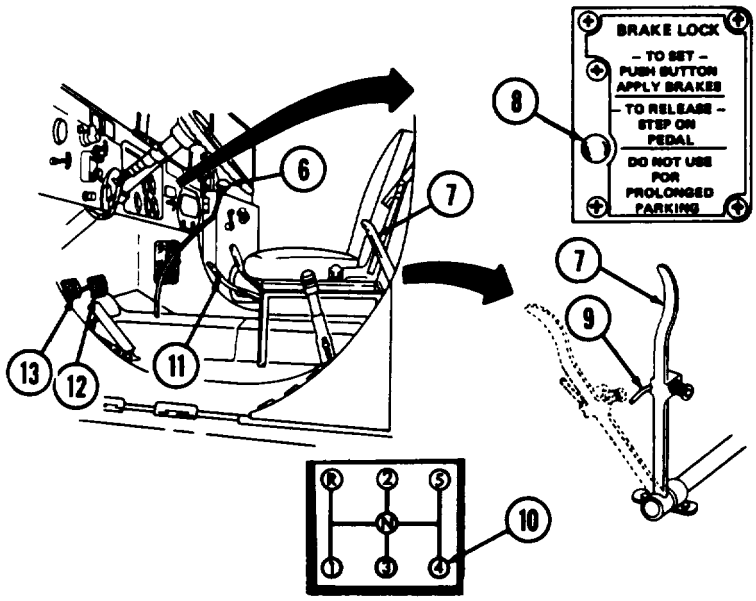


**(1)** Start engine (refer to paragraphs 2-12 and 2-13).

**(2)** Depress clutch pedal (13) all the way.

**(3)** Place transfer selector lever (11) in "N" (neutral) position.

**(4)** Place gearshift lever (6) in "4" (fourth) gear (10).

**(5)** Move power divider control lever lock (9) to unlocked position.

**(6)** Push power divider control lever (7) down to engaged position.

**(7)** Release clutch pedal (13) slowly.

**(8)** Press electric brake lock switch button (8) and hold.

**(9)** Depress service brake pedal (12) down all the way and release.

**(10)** Release brake lock switch button (8).

**NOTE**

Brakes are now locked.

TA 094333

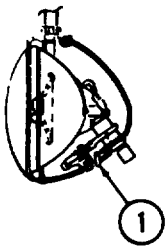


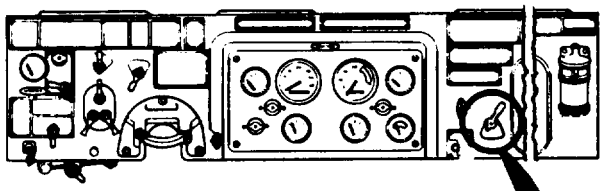

(11) For night operation, move main floodlight control switch (2) to ON position (if tactical situation permits).

(12) Move floodlight switch (1) to ON position for each floodlight to be used.

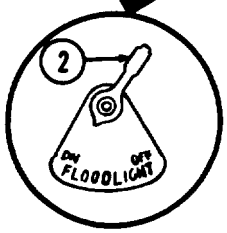


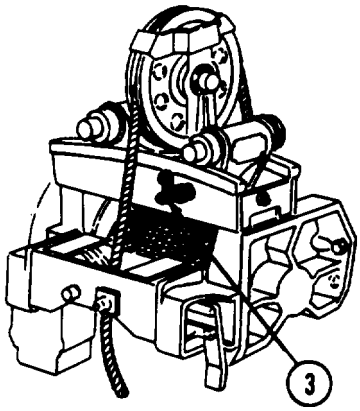


(13) Pull level wind knob (3), rotate 1/4 turn, and release.

(14) Move engine clutch control lever (8) to DISENGAGE position.

(15) Pull cable tensioner control valve lever (11) up to OFF position.

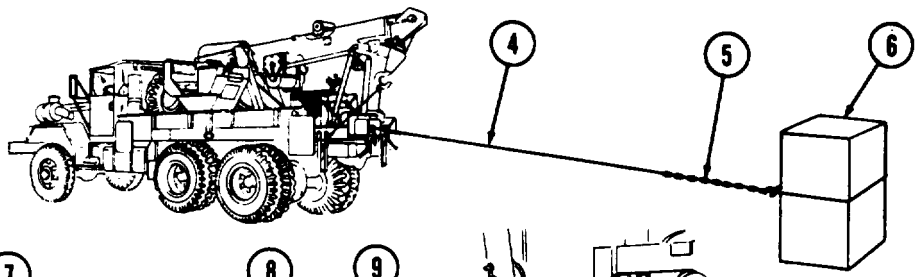


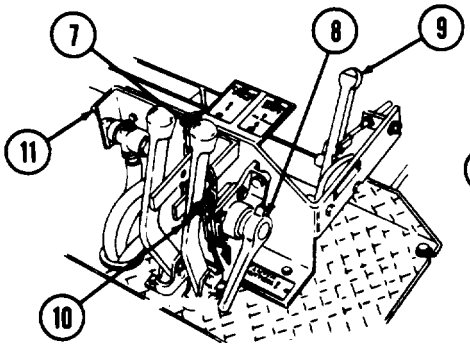


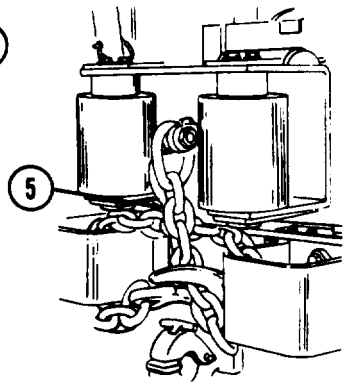


TA 094334

**NOTE**

Two crewmembers will be needed for the following procedures.

**(16)** Remove lockpin (10) from winch shift lever (7) and move lever (7) to UNWIND position.

**NOTE**

Move engine clutch control lever (8) to ENGAGE position, and back to DISENGAGE position quickly.

**(17)** Move engine clutch control lever (8) to ENGAGE position until crewmember can unhook chain (5).

**(18)** Have crewmember unhook winch cable chain (5) from stowed position.

**(19)** Hold chain (5) until signaled to pull.

**WARNING**

Do not handle winch cable unless necessary and never with bare hands. Always wear hand protection when handling cables. Broken wires can cause injuries.

**CAUTION**

Keep tension on winch cable while winch drum is turning so that cable does not get crossed on drum.

**(20)** Move engine clutch control lever (8) to ENGAGE position. Signal crewmember to pull on cable (4).

**(21)** If winch cable (4) is unwinding too fast, move throttle control lever (9) rearward to slow engine speed. To increase engine speed, move lever (9) forward.

**(22)** Notify crewmember to pull winch cable (4) and chain (5) as far as needed to reach load (6) to be pulled.

**(23)** Move engine clutch control lever (8) to DISENGAGE position.

**(24)** Move rear winch shift lever (7) to NEUTRAL position.

**(25)** Lock rear winch shift lever (7) with lockpin (10).

**(26)** Move engine clutch control lever (8) to ENGAGED position.

**(27)** Stop engine (refer to paragraph 2-16).

**(27.1)** If bumperettes are removed and slot has been cut in storage box (12), stow hook and chain (5) in storage box (12).

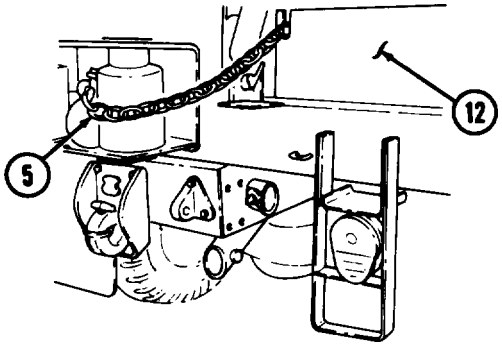


TA 094335

**e. Rigging the Load.**

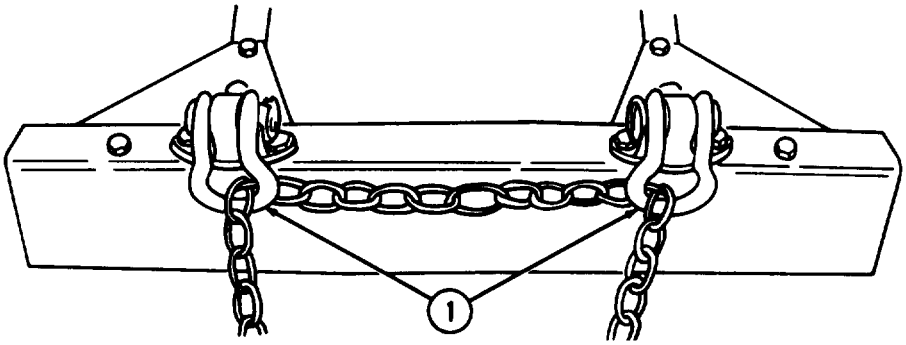


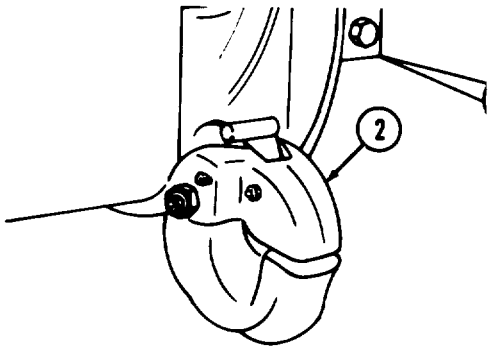


**WARNING**

Make sure cotter pin has been properly installed and secured in pintle before proceeding with mission. Failure to comply may result in injury to personnel or damage to equipment.

(1) If a truck is to be recovered, hookup utility chains (8) to shackles (1) on truck front bumper or to pintle (2) at rear of truck.

(2) If truck recovery must be made at an angle; refer to c. above.

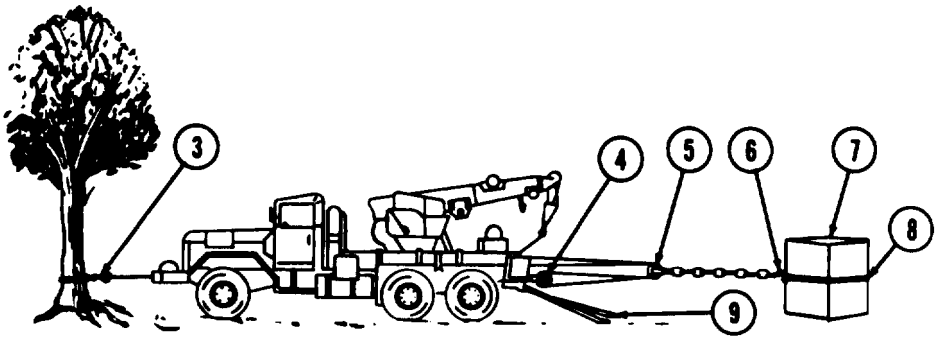


TA 094336

**(3)** For very heavy loads (over 14,500 lbs (6,583 kg)), use single sheave snatch block (4) or double sheave snatch block (5), or a combination of these two. This will increase pulling power of winch. Use field chocks to stabilize vehicle.

**(4)** Attach cable sling or utility chain (8) around load (7) to be pulled.

**CAUTION**

Never wrap winch cable around load. The cable may get pinched or kinked, and be weakened.

**(5)** Attach winch cable chain hook (6) to cable sling or utility chain (8) on load (7).

**(6)** For heavy rear recovery operations, use field chocks (9) and tree or other object for vehicle anchor. Wrap front winch chain (3) around tree or other object as shown. Refer to paragrpah 2-22 for front winch operating instructions.

**f. Pulling the Load.**

**WARNING**

- During all winch operations, the instant that slack in winch line is taken up is critical. Tell all personnel to stand clear of winch line and load to avoid injury.
- A snapped winch line or shifting load can be very dangerous. If load shifts, presenting hazard, stop pulling and readjust load. If any part of the equipment fails, stop operations and tell organizational maintenance.

**(1)** Start engine (refer to paragraphs 2-12 and 2-13).

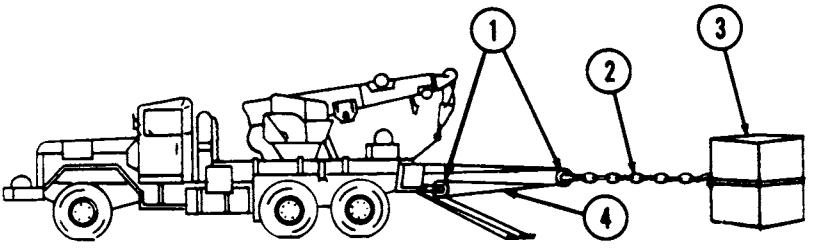


**WARNING**

Sudden tightening of loose cable can cause injury.

**(2)** Move engine clutch control lever (8) to DISENGAGE position.

**(3)** Remove lockpin (9).

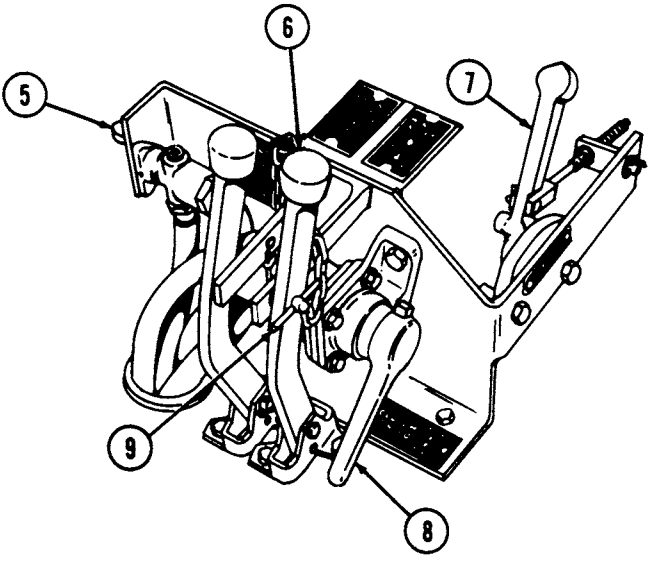


**(4)** Move rear winch shift lever (6) to WIND position.

**(5)** Move engine clutch control lever (8) to ENGAGE position.

**(5.1)** Take up slack, stop winch (refer to g. below), and recheck rigging.

**(5.2)** Perform steps 1 through 3 above.

**(6)** Move throttle control lever (7) forward to increase, or rearward to decrease speed of winch rewind operation.

**(7)** Stop winch (refer to g. below).

**g. Stopping the Winch.**

**(1)** Move engine clutch control lever (8) to DISENGAGE position.

**(2)** Move rear winch shift lever (6) to NEUTRAL position.

**(3)** Move throttle control lever (7) rearward to reduce engine speed.

**(3.1)** Lock rear winch shift lever (6) with lockpin (9).

**(4)** Move engine clutch control lever (8) to ENGAGE position.

**(5)** Stop engine (refer to paragraph 2-16).

**h. Rewinding the Winch Without a Load.**

**(1)** Unhook winch cable chain and hook (2) from load (3).

**(2)** Start engine (refer to paragraphs 2-12 and 2-13).

**(3)** Move cable tension control valve lever (5) to ON position.

**(4)** Move engine clutch control lever (8) to DISENGAGE position.

**(5)** Move rear winch shift lever (6) to WIND position.

**(6)** Move throttle control lever (7) forward to slowly rewind winch cable (4).

**i. Preparation for Travel.**

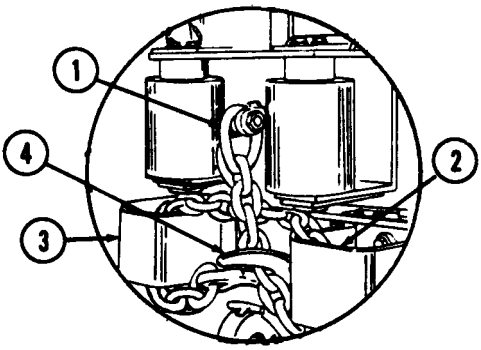


**(1)** Start engine (refer to paragraphs 2-12 and 2-13).

**NOTE**

If bumperettes are removed, secure cable as shown in TB article.

**(2)** To prepare rear winch for travel, place winch cable chain (1) and hook (4) up through right rear bumperette (3), across and down through left rear bumperette (2). Secure by placing hook (4) around chain (1) between bumperettes.

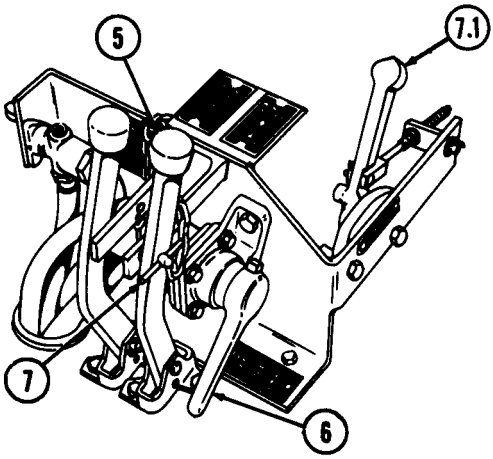


**(3)** Remove slack in winch cable chain (1) by moving winch shift lever (5) to WIND position.

**(4)** Move engine clutch control lever (6) to ENGAGE position, then quickly to DISENGAGE position.

**(4.1)** Move throttle control lever (7.1) rearward to reduce engine speed.

**(5)** Move engine clutch control lever (6) to DISENGAGE position.

**(6)** Move winch shift lever (5) to NEUTRAL position.

**(7)** Install lockpin (7) in winch shift lever (5).

**(8)** Move engine clutch control lever (6) to ENGAGE position.

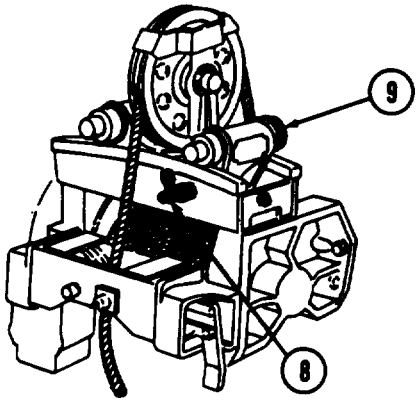


**(9)** Pull level wind lock knob (8) 1/4 turn, and release.

**(10)** Move level wind carriage (9) toward either side until locked in position.

**(11)** Move power divider lever ( 10) up to disengage position and move lever lock (11 ) down to locked position.

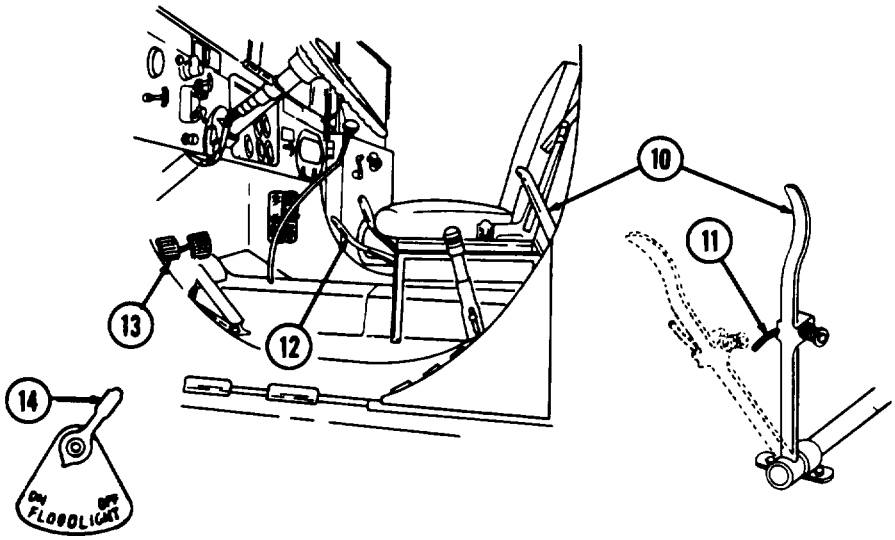


**(12)** Move main floodlight switch (14) to OFF position.

**(13)** Depress clutch pedal ( 13) all the way.

**(14)** Move transfer selector lever (12) to HIGH position,

TA 094341

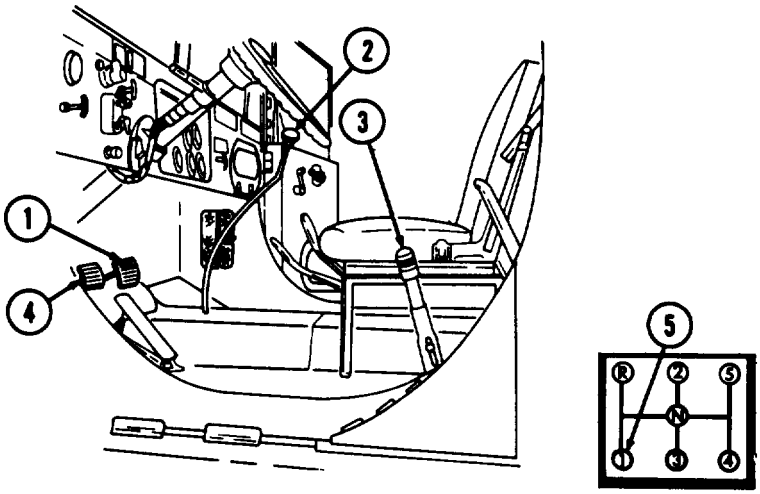


**(15)** Move gearshift lever (2) to"1" (first) gear (5).

**(16)** Depress service brake pedal (1) once or twice to release electric brake lock.

**(17)** With clutch pedal (4) still held in down position, release parking brake (3).

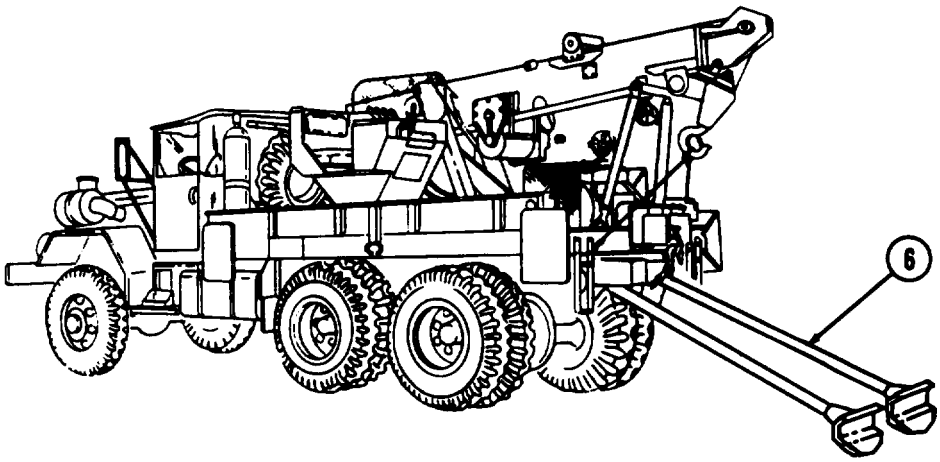


**(18)** Release clutch pedal (4) slowly and move vehicle forward to pull field chocks (6) from holes in the ground.

TA 094342

**(19)** Depress brake pedal (1) all the way.

**(20)** Depress clutch pedal (4) all the way.

**(21)** Move gearshift lever (2) to “N” (neutral) position.

**(22)** Apply parking brake (3).

**(23)** Remove field chocks (6); clean and stow in compartment behind operator's cab.

**(24)** Clean and stow slings, utility chains, and snatch blocks.

**(25)** Stop engine (refer to paragraph 2-16).

TA 094343

## 2-26. OPERATION OF DUMP TRUCK

**a. General.** The M817 dump truck has an all steel dump body with a universal-type tailgate which may be opened at either top or bottom. This permits operation as a regular. rocker-type, or spreader-type dump truck. The dump body also can be used as a regular cargo carrier or, when equipped with a special purpose troop seat kit, as a personnel carrier.

**WARNING**

Dump body control lever in cab must be locked in neutral position when dump truck is used as personnel carrier. Lever engaged could cause dump body to raise, resulting in serious injury to personnel.

**b. Payload Capacities.** Payload capacity is 10,000 pounds (4,540 kilograms) maximum. Table 2-3 lists typical material weights.

Table 2-3. Typical Material Weights

| | MATERIAL WEIGHT | | Capacity level full 5.0 cu-yd or 135 cu-ft | Capacity heaping full 7.5 cu-yd or 202.5 cu-ft |
|---|---|---|---|---|
| | lb per cu-ft | lb per cu-yd (kg per cuM) | lb (approx) (kg) | lb (approx) (kg) |
| Ashes | 43 | 1,161 (1,518.5) | 5,805 (2,635.5) | 8,708 (3,953.4) |
| Cinders | 46 | 1,242 (1,624.4) | 6,210 (2,819.3) | 9,315 (4,229.0) |
| Clay, dry loose | 77 | 2,079 (2,719.1) | 10,395 (4,719.3) | 15,593 (7,079.2) |
| Clay, wet | 110 | 2,970 (3,884.5) | 14,850 (6,741.9) | 22,270 (10,110.6) |
| Clay and gravel, dry | 65 | 1,755 (2,295.4) | 8,774 (3,983.4) | 13,163 (5,976.0) |
| Clay and gravel, wet | 110 | 2,700 (3,531.3) | 13,500 (6,129.0) | 20,250 (9,193.5) |
| Coal, anthracite (hard) | 54 | 1,458 (1,906.9) | 7,290 (3,309.7) | 10,935 (4,964.5) |
| Coal, bituminous (soft) | 81 | 2,187 (2,860.4) | 10,935 (4,964.5) | 16,403 (7,447.0) |
| Coke | 28 | 756 (988.8) | 3,780 (1,716.1) | 5,670 (2,574.2) |
| Concrete | 138 | 3,726 (4,873.2) | 18,630 (8,458.0) | 27,945 (12,687.0) |
| Concrete mix, wet | 124 | 3,618 (4,732.0) | 18,090 (8,212.9) | 27,135 (12,319.3) |
| Earth, dry loose | 75 | 2,015 (2,635.4) | 10,125 (4,596.8) | 15,188 (6,895.4) |
| Earth, moist packed | 95 | 2,565 (3,354.8) | 12,825 (5,822.6) | 19,238 (8,734.1) |
| Earth and gravel, dry loose | 100 | 2,700 (3,531.3) | 13,500 (6,129.0) | 20,250 (9,193.5) |
| Garbage, dry | 37 | 999 (1,306.6) | 4,995 (2,267.7) | 7,493 (3,401.8) |

TA 094344

Table 2-3. Typical Material Weights *(Cont'd)*

| | MATERIAL WEIGHT | | Capacity level full 5.0 cu-yd or 135 cu-ft | Capacity heaping full 7.5 cu-yd or 202.5 cu-ft |
|---|---|---|---|---|
| | lb per cu-ft | lb per cu-yd (kg per cuM) | lb (approx) (kg) | lb (approx) (kg) |
| Garbage, wet | 47 | 1,269 (1,659.7) | 6,345 (2,880.6) | 9,518 (4,321.2) |
| Gravel | 110 | 2,970 3,884.5 | 14,850 6,741.9 | 22,275 10,112.9 |
| Gravel and sand, dry loose | 95 | 2,565 (3,354.8) | 12,825 (5,822.6) | 19,238 (8,734.1) |
| Gravel and sand, wet | 120 | 3,240 (4,237.6) | 16,200 (7,354.8) | 24,300 (11,032.2) |
| Limestone, crushed | 100 | 2,700 (3,531.3) | 13,500 (6,129.0) | 20,250 (9,193.5) |
| Mud, wet | 120 | 3,240 (4,237.6) | 16,200 (7,354.8) | 24,300 (11,032.2) |
| Rock and stone, crushed | 95 | 2,565 (3,354.8) | 12,825 (5,822.6) | 19,238 (8,734.1) |
| Salt, fine | 50 | 1,350 (1,765.7) | 6,750 (3,064.5) | 10,125 (4,596.8) |
| Sand, dry loose | 98 | 2,646 (3,460.7) | 13,230 (6,006.4) | 19,845 (9,009.6) |
| Sand, dry packed | 110 | 2,970 (3,884.5) | 14,850 (6,741.9) | 22,275 (10,112.9) |
| Sand, moist loose | 120 | 3,240 (4,237.6) | 16,200 (7,354.8) | 24,300 (11,032.2) |
| Slag, crushed | 75 | 2,025 (2,648.5) | 10,125 (4,596.8) | 15,188 (6,895.4) |
| Snow, moist packed | 50 | 1,350 (1,765.7) | 6,750 (3,064.5) | 10,125 (4,596.8) |
| Stone, crushed | 100 | 2,700 (3,531.3) | 13,500 (6,129.0) | 20,250 (9,193.5) |
| Stone, loose | 95 | 2,565 (3,354.8) | 12,825 (5,822.6) | 19,238 (8,734.1) |

***C A U T I O N***

Table 2-3 is advisory only! Do not exceed the 10,000 pound payload limit. Use Table 2-3 to estimate your load.

TA 094345

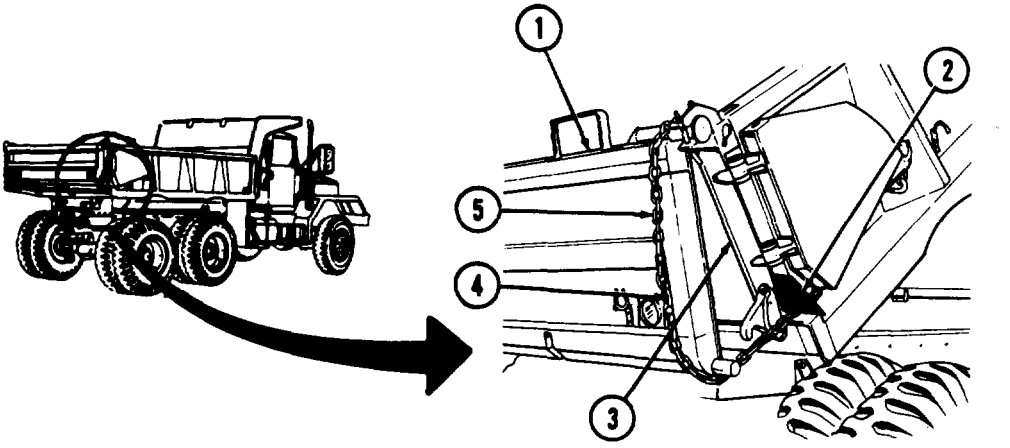


c. **Before Operation.**

(1) To rig tailgate (1) to swing open at bottom for spreading operation, follow these procedures for both ends of tailgate(1):

**(a)** Pass free end of chain (5) through hook (4).

**(b)** Bring chain (5) under tailgate (1) to corner brace (3) and through holes at bottom locking slots (2). Leave enough slack in chain (5) to allow tailgate (1) to swing open.

**NOTE**

Tailgate (1) opening must be wide enough to allow material to pass through when dump body is raised.

TA 094346

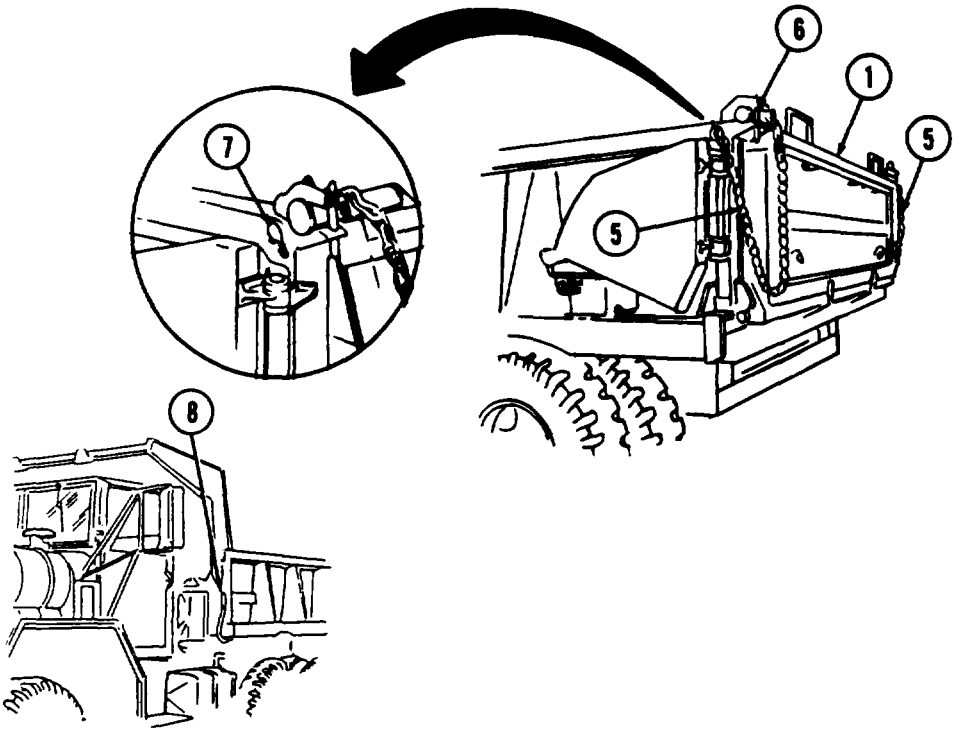


**(c)** Lock chains (5) in place by securing to locking slots (2).

**(d)** Pull control rod lever (8) forward and down to unlock tailgate(1).

**(2)** To rig tailgate(1) to swing open at top for end loading or unloading, follow these procedures for both ends of tailgate (1):

**(a)** Remove chains (5) from locking slots (2).

**(b)** Pull free end of chains (5) over top of tailgate (1) and secure in locking slots (7).

**Note**

Allow enough slack in chains (5) to hold tailgate (1) in line with dump body when tailgate is swung down.

**(c)** Remove retaining pin (6) and move tailgate (1) down slowly. Do not let tailgate drop.

TA 094347

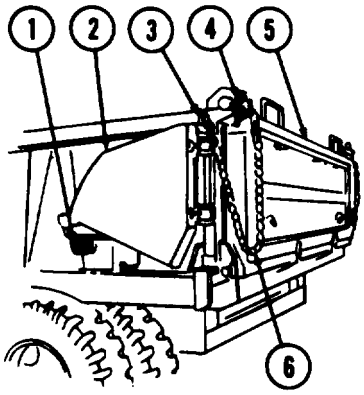


**(3)** To rig tailgate (5) to swing open at top for rocker-type operation, follow these procedures for both ends of tailgate (5).

**(a)** Release harness hook (1) holding tailgate wing (2) in place.

**(b)** Swing wing (2) rearward.

**CAUTION**

Make sure chains (6) are secured in locking slots (3). Tailgate will swing open freely.

**(c)** Remove retaining pin (4) and bring tailgate (5) down slowly.

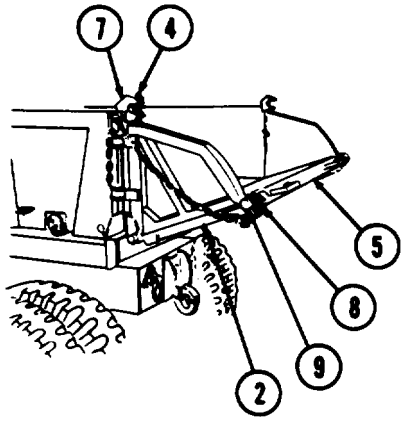


**(d)** Install hinge pin (9) in tailgate wing groove (8).

**(e)** Install retaining pin (4) in upper hinge bracket (7).

**d. Loading the Truck.**

**(1)** To load dump truck from top, follow these procedures:

TA 094348

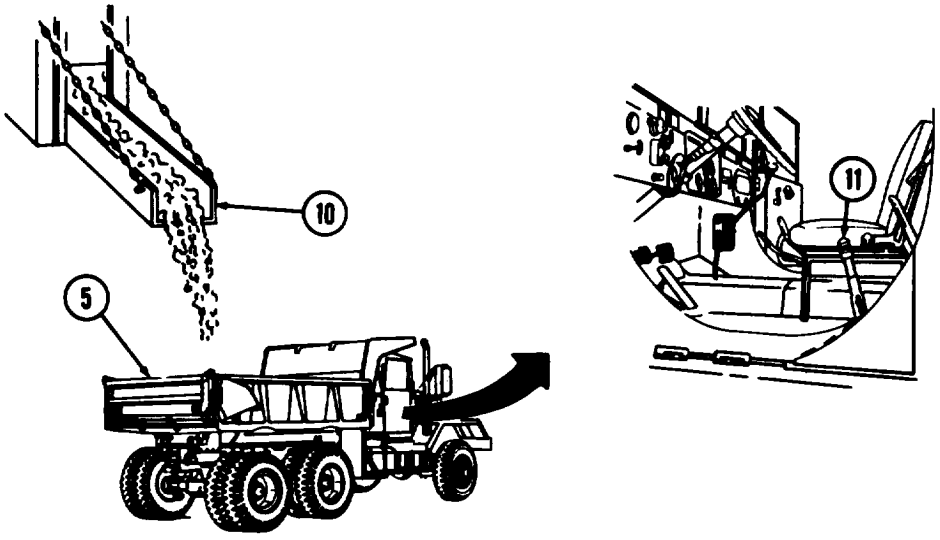


**(a)** Start engine (refer to paragraphs 2-12 and 2-13). Move truck so dump body is alined directly under loading vehicle (10).

**(b)** Stop engine (refer to paragraph 2-16).

**(2)** Load truck (refer to b. above for load capacity).

**(3)** To end load dump truck, follow these procedures:

**(a)** Rig tailgate for end loading (refer to c. above).

**(b)** Start engine (refer to paragraphs 2-12 and 2-13).

**NOTE**

Assistant must guide the driver when backing vehicle.

**(c)** Back vehicle into position (refer to paragraph 2-17).

**(d)** Pull parking brake lever (II ) up to apply.

**(e)** Stop engine (refer to paragraph 2-16).

**(4)** Load vehicle (refer to b. above for load capacity).

**(5)** When vehicle is loaded, swing tailgate (5) up and install retaining pins (4) to secure.

TA 094349

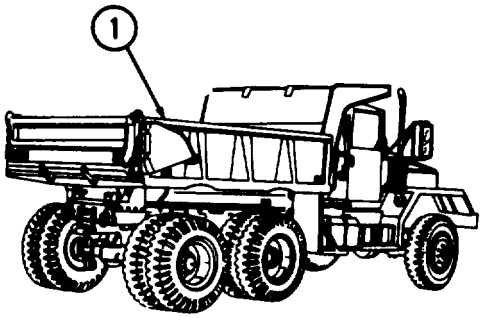


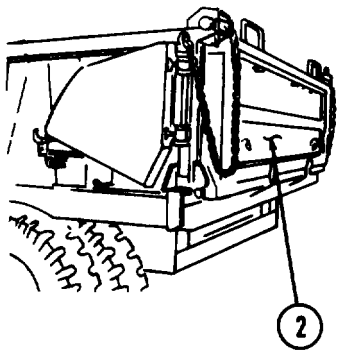


e. Unloading the Truck With Dump Body Down.

**(1)** To unload from tailgate end with dump body (1) in down position, follow these procedures:

**(a)** Rig tailgate for end loading (refer to c. above).

**(b)** Start engine (refer to paragraphs 2-12 and 2-13).

**NOTE**

Assistant must guide the driver when backing vehicle.

**(c)** Back vehicle into position (refer to paragraph 2-17).

**(d)** Stop engine (refer to paragraph 2-16).

**(e)** Unload truck by hand, forklift truck, or other mechanical device.

**f. Unloading the Truck by Dumping.**

**CAUTION**

With the dump body in the raised position. do not jerk the vehicle by moving forward and backward to free material flow from under the tailgate. This will cause damage to the dump body hoist and dumping mechanism.

**(1)** Start engine (refer to paragraphs 2-12 and 2-13).

**(2)** Position vehicle so tailgate (2) is over dumping area.

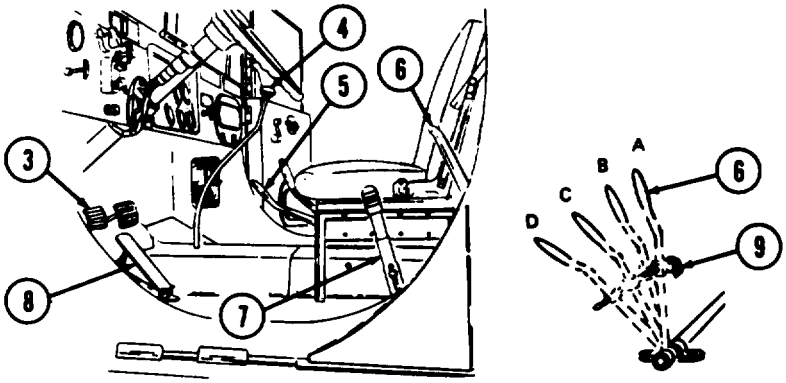


**(3)** Pull parking brake lever (7) to apply.

**(4)** Depress clutch pedal (3) all the way.

**(5)** Move gearshift lever (4) and transfer selector lever (5) to "N" (neutral) position.

**(6)** Release clutch pedal (3).

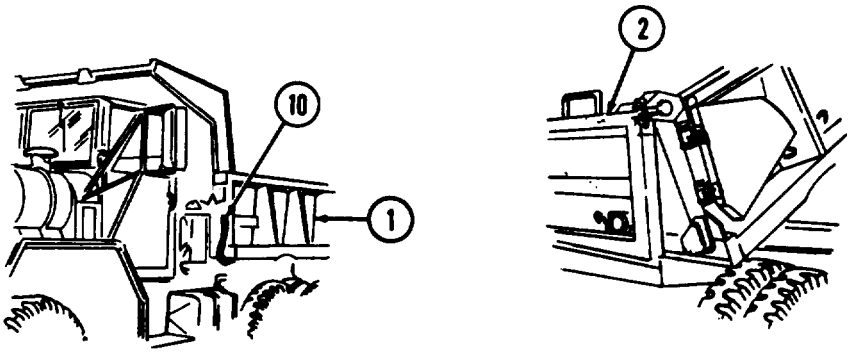


**(7)** Rig tailgate (2) to open at bottom.

**(8)** Pull control rod lever (10) forward and down to unlock tailgate (2).

**(9)** Release dump body control lever safety lock (9).

**(10)** Depress accelerator pedal (8) just enough to prevent engine from stalling.

**(11)** Depress clutch pedal (3) all the way.

**(12)** Move dump body control lever (6) forward to position “D” to raise dump body.

**(13)** Release clutch pedal (3) slowly, and dump body will begin to rise.

TA 094351

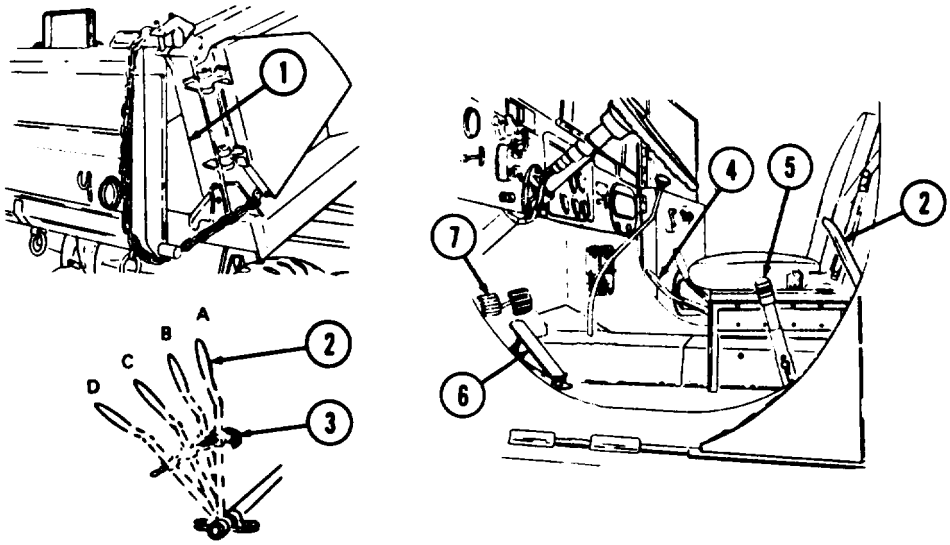


**(14)** When dump body is raised to desired height, move dump body control lever (2) back to position "C" to stop and hold dump body.

**(15)** Dump load.

**(16)** After dumping load, clear tailgate (1) area of material.

**(17)** Move dump body control lever (2) back to let body down.

**(18)** When body is down, move control lever (2) to position "A".

**WARNING**

Make sure dump body control lever safety lock (3) is engaged when hoist is not is use. Injury to personnel can result.

**(19)** Engage safety lock (3).

**(20)** Depress clutch pedal (7) all the way.

**(21)** Move transfer selector lever (4) to HIGH position.

**(22)** Release clutch pedal (7).

**(23)** Stop engine (refer to paragraph 2-16).

TA 094352

**(24)** Apply parking brake (5).

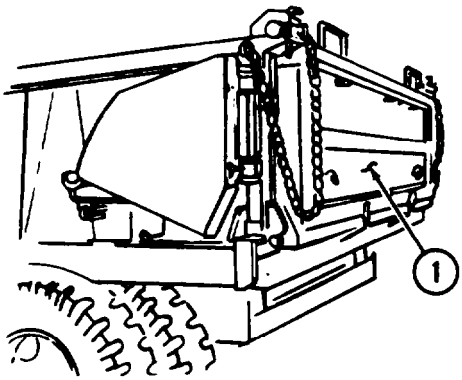


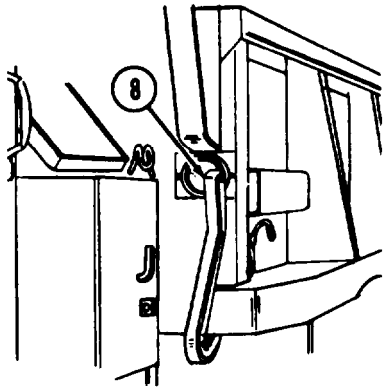


**(25)** Move control rod hand lever (8) up and back to lock tailgate(1) in closed position.

**g. Unloading the Truck by Rocker-Type Operation.**

**CAUTION**

With the dump box in the raised position, do not jerk the vehicle by moving forward and backward to free material flow from under the tailgate. This will cause damage to the dump body hoist and dumping mechanism.

**(1)** Repeat steps 1 through 6, in f. above.

**(2)** Rig tailgate (1) to open at top (refer to c., step 3 above).

**(3)** Release control lever safety lock (3).

**(4)** Depress accelerator pedal (6) enough to prevent engine from stalling.

**(5)** Depress clutch pedal (7) all the way.

**(6)** Move dump body control lever (2) to position “D” to raise dump body.

**(7)** Release clutch pedal (7) slowly.

**(8)** When body is raised partially, move control lever (2) to position "C" to stop body and unload a portion of the material.

**(9)** Repeat steps 6 and 7 until all material is unloaded.

TA 094353

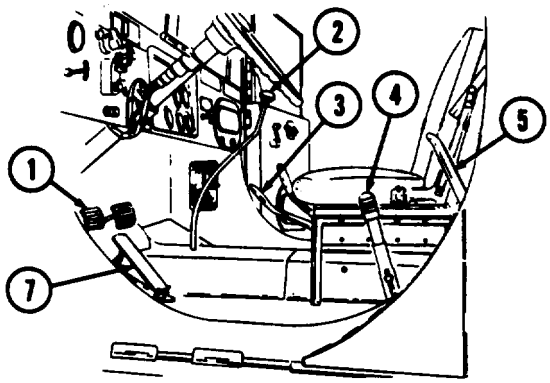


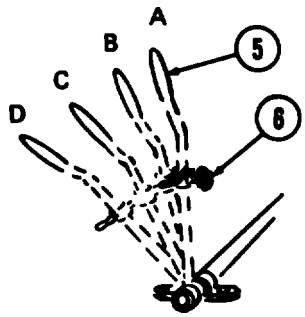


**(10)** After dumping load, move control lever (5) to position "B" to lower body.

**(11)** When body is down, move control lever (5) to position "A".

**(12)** Release accelerator pedal (7).

**WARNING**

Make sure dump body control lever safety lock (6) is engaged when hoist is not is use. Injury to personnel can result.

(13) Engage safety lock (6).

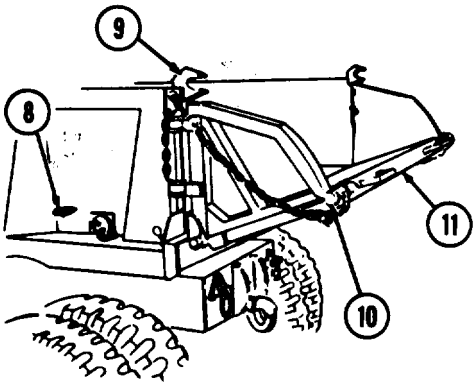


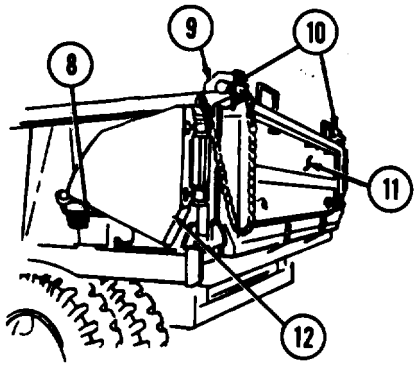


**(14)** Remove retaining pins (10) and swing tailgate wings (12) to body sides.

**(15)** Close tailgate (11) and install retaining pins (10) to hinge brackets (9).

TA 094354

**(16)** Lock tailgate wings (12) to dump body sides with lashing hooks (8).

**(17)** Depress clutch pedal (1) all the way.

**(18)** Move transfer selector lever (3) to HIGH position.

**(19)** Release clutch pedal (1) slowly.

**(20)** Apply parking brake (4).

**h. Unloading the Truck by Spreading.**

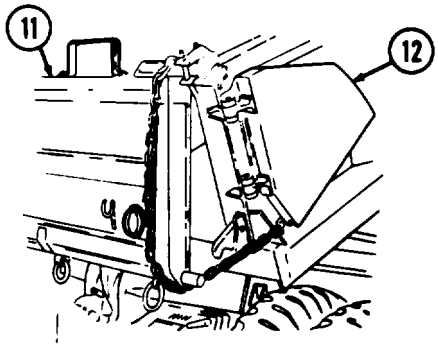


**CAUTION**

With the dump box in the raised position, do not jerk the vehicle by moving forward and backward to free material flow from under the tailgate. This will cause damage to the dump body hoist and dumping mechanism.

**(1)** Position vehicle with tailgate (11) at spreading area starting point.

**(2)** Apply parking brake (4).

**(3)** Move gearshift lever (2) to "N'" (neutral) position.

**(4)** Rig tailgate (11) to swing open at bottom (refer to c., step 1 above).

**(5)** Move tailgate control rod hand lever (13) forward and down to unlock tailgate (11).

**(6)** Release dump body control safety lock (6).

**(7)** Depress clutch pedal (1) all the way.

**(8)** To raise dump body, move control lever (5) forward to position "D".

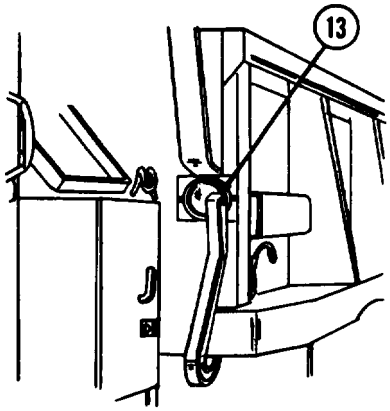


TA 094355

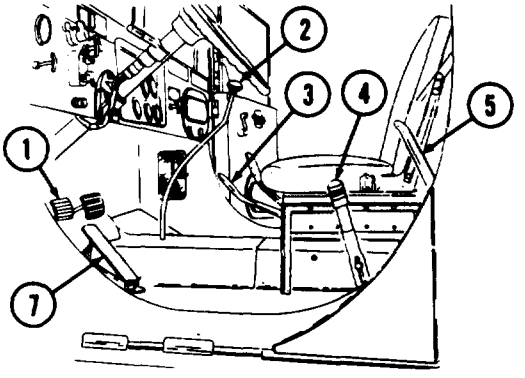


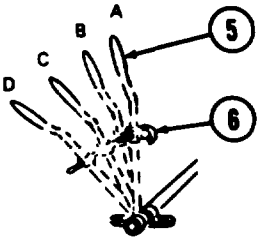


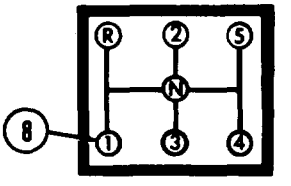


**(9)** Release clutch pedal (1) slowly and depress accelerator pedal (7) enough to prevent engine from stalling.

**(10)** When dump body is up, move control lever (5) to position "C" to hold dump body in position.

**(11)** Depress clutch pedal (1) all the way.

**(12)** Move gearshift lever (2) to "1" (first) gear (8).

**(13)** Move transfer selector lever (3) to LOW position.

**(14)** Release parking brake (4).

**(15)** Depress accelerator pedal (7) and release clutch pedal (1) slowly to move vehicle forward and spread load.

**(16)** Move dump body control lever (5) back and forth from position "C" to position "D" so that material flows under tailgate (9).

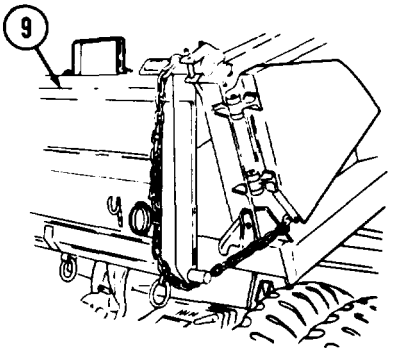


**(17)** After load is dumped, move control lever (5) to position "B" to lower dump body.

TA 094356

**WARNING**

Make sure dump body control lever safety lock is engaged when hoist is not in use. Injury to personnel can result.

**CAUTION**

Do not leave dump truck control lever in position "B", "C", or "D", when moving truck from one job to another.

**(18)** With dump body down. move control lever (5) to position "A" and engage safety lock (6).

**(19)** Apply parking brake (4).

**(20)** Stop engine (refer to paragraph 2-16).

**(21)** Move tailgate control rod hand lever (10) up and rearward to lock tailgate (9).

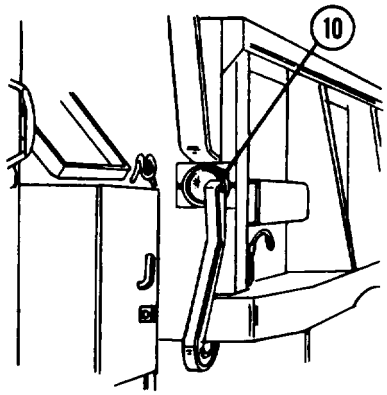


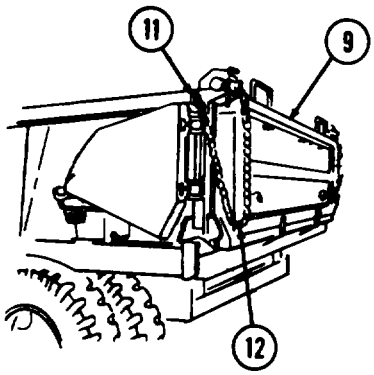


**(22)** Place end of tailgate chain (12) in locking slot (11).

**i.** Make sure dump body control lever safety lock (6) is securely engaged when vehicle is used for transporting personnel or cargo.

## 2-27. OPERATION OF TRACTOR AND TRACTOR WRECKER FIFTH WHEEL

**a. General.** A fifth wheel (semitrailer coupler) is mounted on the rear of M818 tractor trucks and M819 tractor wrecker trucks. The base of the fifth wheel pivots on a walking beam which in turn pivots on the subbase. This construction permits fifth wheel to move in all planes determined by road conditions. For fifth wheel maximum load ratings, refer to table 1-3.

**NOTE**

A newer model fifth wheel is provisioned as a replacement item on the M818 tractor. Operating instructions for this fifth wheel will apply to M818 vehicles only.

**b. Coupling the Semitrailer.**

**NOTE**

Two crewmembers are required to complete the following procedures.

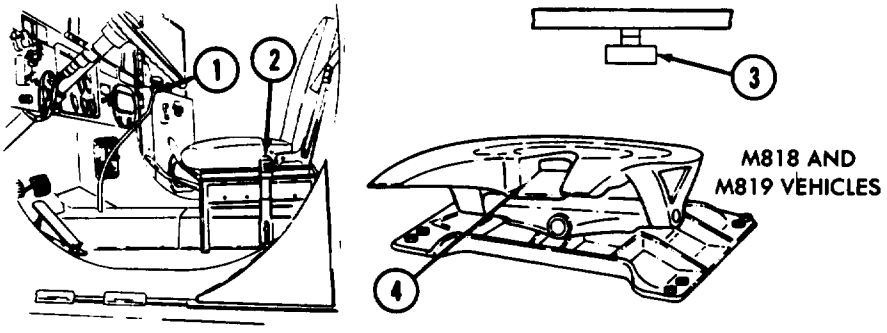


**(1)** Start engine (refer to paragraphs 2-12 and 2-13).

**(2)** Move tractor truck and aline fifth wheel coupling jaws (4) with semitrailer kingpin (3).

**(3)** Place gearshift lever (1) in "N" (neutral) position.

**(4)** Apply parking brake (2).

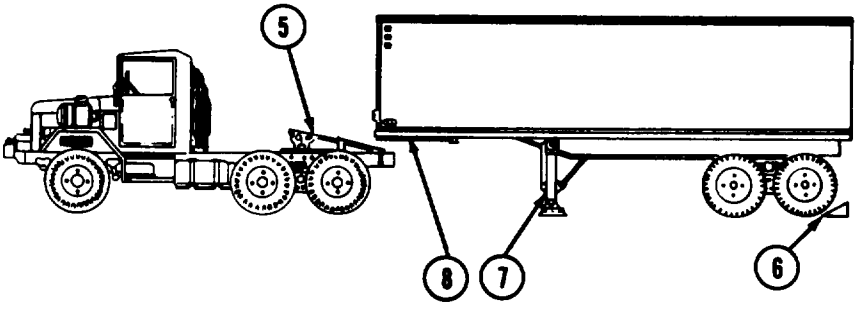


**(5)** Adjust trailer landing gear (7) to raise or lower semitrailer skid plate (8). Skid plate (8) should be slightly lower than tractor fifth wheel (5).

**(6)** Position semitrailer wheel chocks (6) in place.

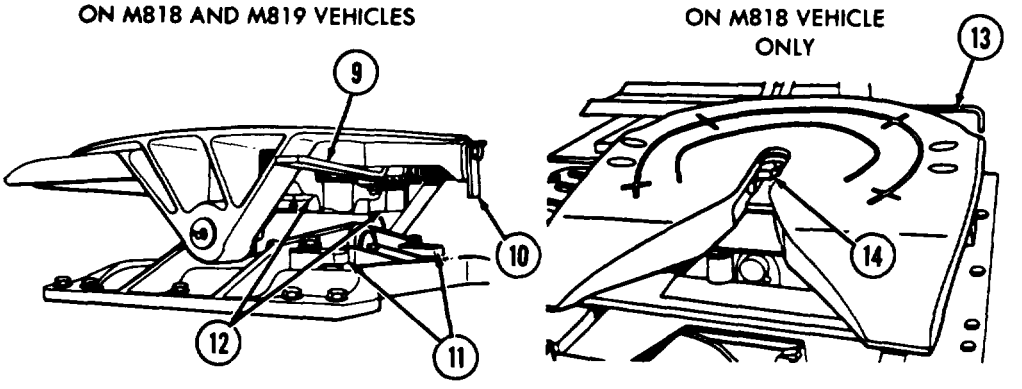


**(7)** Move locking plunger safety latch (10) to right or left to release locking plunger.

**(8)** Move locking plunger lever (9) forward and secure in forward position. Coupling jaws (12) are now unlocked.

**NOTE**

Step 9 applies to M818 vehicles only (replacement fifth wheel).

**(9)** Pull plunger handle (13) forward. then out to open fifth wheel coupling jaws (14) (M818 only).

**WARNING**

Make sure fifth wheel wedges are in proper position for travel conditions. Failure to do so may cause an accident with injury or death to personnel.

**(10)** For highway travel. fifth wheel wedges (11) must be pushed in all the way.

**(11)** For cross-country travel. wedges (11) must be pulled out all the way.

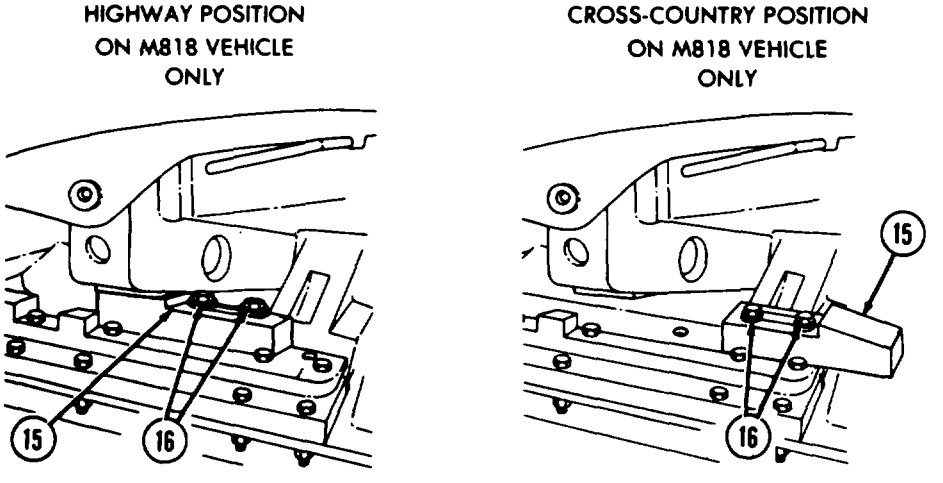


TA 094359

**NOTE**

Steps 12 (a) (b), and (c) apply to M818 vehicles only replacement fifth wheel).

**(12)** To position wedges (15) (M818 vehicles only):

**(a)** Remove two screws (16) from each wedge (15).

**(b)** Remove wedge (15). and reverse position.

**(c)** Install screws (16) in two most forward mounting holes for cross-country position. Reverse wedges (15) and install screws (16) in two most rearward holes for highway position.

**(13)** Remove emergency airbrake hose (6) from hose supports (5).

**WARNING**

Make sure to connect service airbrake hose to service coupling on semitrailer. and emergency airbrake hose to emergency coupling. Hoses not properly connected will cause brake failure. This can result in injury or death.

(14) Connect emergency airbrake hose halt coupling (Z) to halt coupling (1) on semitrailer emergency airbrake system and lock in position.

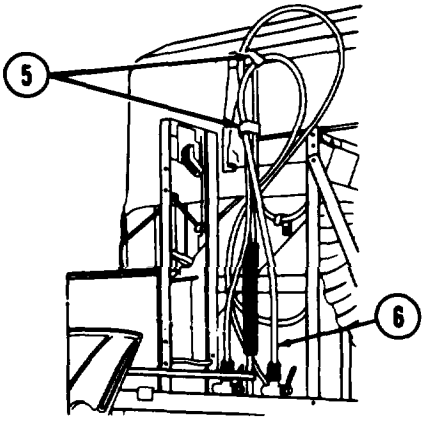


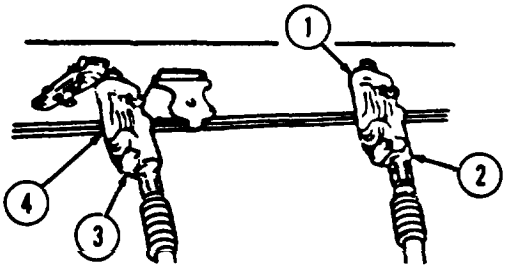


**(15)** Remove service airbrake hose (6) from hose supports (5).

**WARNING**

Failure to turn on air shutoff valves will result in loss of brakes on towed vehicle. This may cause injury to personnel.

(16) Connect service airbrake hose half coupling (3) to half coupling (4) on semi-trailer service airbrake system and lock in place.

**NOTE**

Service air valve handle is located on driver's side of vehicle.

**(17)** Move service and emergency air valve handles (7) to open position.

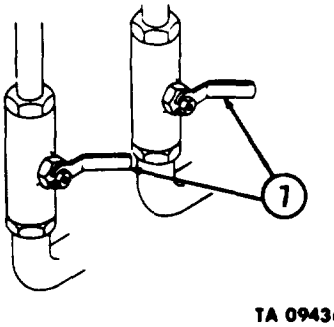


TA 094360

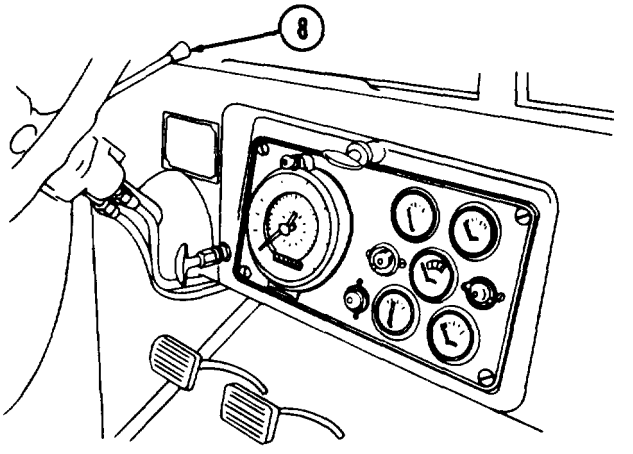


**(18)** Pull down on airbrake hand control lever (8) to check service airbrake system. Air should be heard passing through control valve.

**NOTE**

If air flow is not heard, recheck hose connections and position of air valve levers. If correctly connected and air flow is not heard, notify organizational maintenance.

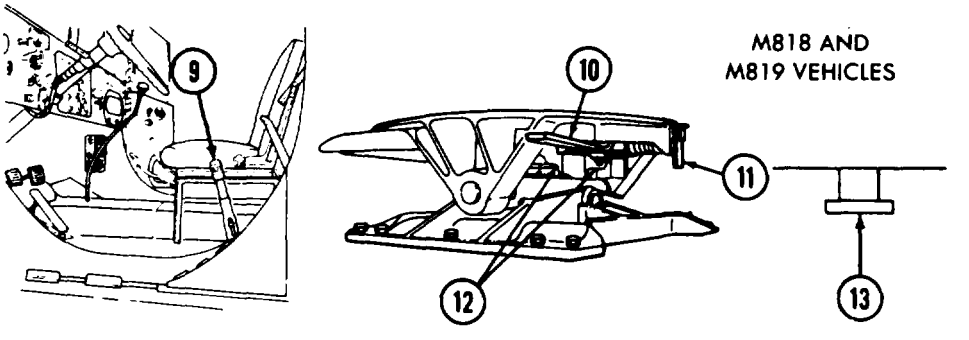


**(19)** Release parking brake (9).

**WARNING**

Do not back up without assistance of a ground guide. Failure to do this will result in damage to vehicle, injury, or death.

**(20)** Slowly back tractor under semitrailer until fifth wheel coupling jaws (12) are securely locked around semitrailer kingpin (13).

**(21)** Apply parking brake (9).

**(22)** Make sure locking plunger lever (10) is in rearward (locked) position, and locking plunger safety latch (11) is in vertical position.

TA 094361

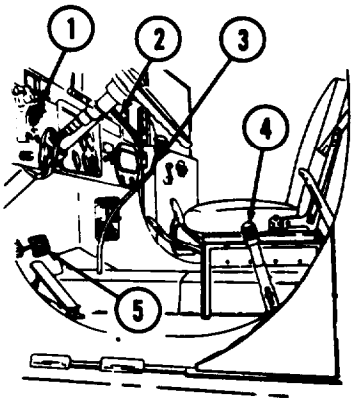


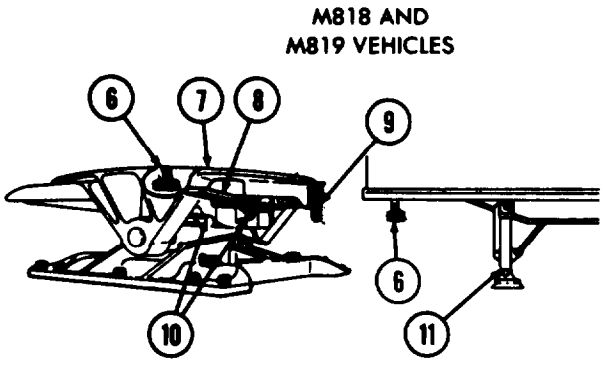


**(23)** Release parking brake (4).

**(24)** With semitrailer airbrake hand control lever (2) in ON (lever down) position, slowly move tractor forward to get positive locking of semitrailer kingpin (6) with fifth wheel (7).

**(25)** After ensuring that locking is positive, move gearshift lever (3) in "N" (neutral) position.

**(26)** Stop engine (refer to paragraph 2-16) and apply parking brake (4).

**(27)** Raise trailer landing gear (11).

**(28)** Remove electrical cable (14) from hose support and secure connector (13) in semitrailer receptacle (12).

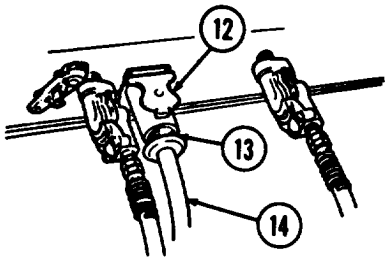


**(29)** Move light switch (1) to ON and OFF positions several times.

**(30)** Check semitrailer running lights (15) for proper operation.

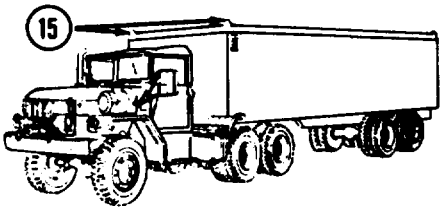


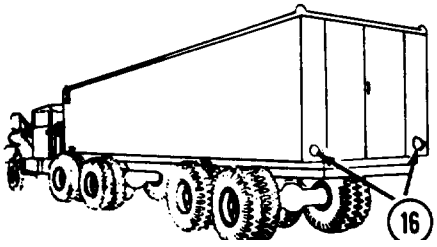


**(31)** Depress service brake pedal (5).

**(32)** Check semitrailer stoplights (16) for proper operation.

**(33)** Remove chock blocks.

**NOTE**

If lights do not operate properly, notify organizational maintenance.

ON M818 VEHICLE ONLY

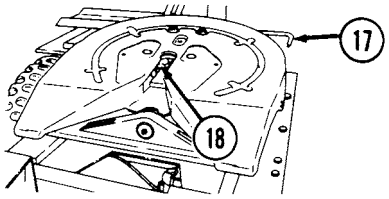


**c. Uncoupling the Semitrailer.**

**(1)** Start engine (refer to paragraphs 2-12 and 2-13).

**(2)** Move vehicle to where semitrailer is to be parked.

**(3)** Move semitrailer airbrake hand control lever (2) to ON (lever down) position.

**(4)** Apply parking brake (4).

**(5)** Move gearshift lever (3) to "N" (neutral) position.

**(6)** Lower semitrailer landing gear (11) and install chock blocks.

**(7)** Disconnect electrical cable connector (13) from semitrailer receptacle (12) and secure in hose support.

**(8)** To release semitrailer kingpin (6), move locking plunger safety latch (9) to release locking plunger.

**(9)** Move locking plunger lever (8) all the way forward to unlock coupling jaws (10).

**NOTE**

Step 10 applies to M818 vehicles only (replacement fifth wheel).

**(10)** To release semitrailer kingpin (6), pull plunger handle (17) forward, then out to open fifth wheel coupling jaws (18) (M818 only).

**(11)** Release parking brake (4) and place transmission gearshift lever (3) in "1" (first) gear.

**(12)** Slowly move tractor forward until fifth wheel (7) is clear of semitrailer skid plates.

**(13)** Stop engine (refer to paragraph 2-16).

**(14)** Apply parking brake (4).

**(15)** Move semitrailer airbrake hand control lever (2) to OFF (lever up) position.

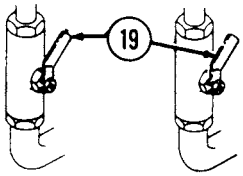


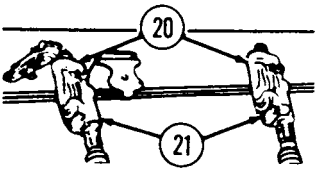


**WARNING**

Except where specifically noted, these systems and components are generally applicable to all vehicles covered in this manual.

**(16)** Move air valve handles (19) to OFF position.

**(17)** Disconnect emergency and service brake hose half couplings (20) from semitrailer half couplings (21) and secure hoses on air hose supports.

# 2-28. OPERATION OF WRECKER CRANE

**WARNING**

- Do not get underneath the wrecker boom when raised unless properly secured. Failure to do this may result in injury or death to personnel.

**HIGH INTENSITY NOISE**

- Hearing protection is required for all personnel working in and around this vehicle with the engine running.

**a. Position Wrecker.** Position the wrecker on firm, level ground whenever possible. Determine which type of lifting is necessary (i.e., rear lift, lift and swing, heavy rear lift or a heavy side lift) and position the wrecker accordingly. For heavy loads, the wrecker should be positioned for a direct rear lift with the elast amount of boom extension.

**NOTE**

Refer to the safe load data plate located near the crane controls. Select the lifting method (with or without outriggers) and crane radius that will permit crane operation within safe limits while lifting the load. Position the wrecker close enough to the load to operate the crane at the radius you have selected.

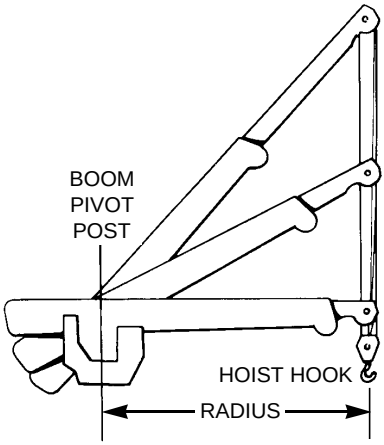


**b. Operation of Wrecker Crane (M816).**

**(1) Preparation for Lifting.**

**WARNING**

Do not use wrecker boom hook tiedown sling for lifting. Sling may snap during lifting of load and cause serious injury to personnel.

**(a)** For night operation, move main floodlight control switch (1) to ON position if tactical situation permits.

**(b)** Move floodlight switch (2) to ON position for each floodlight to be used.

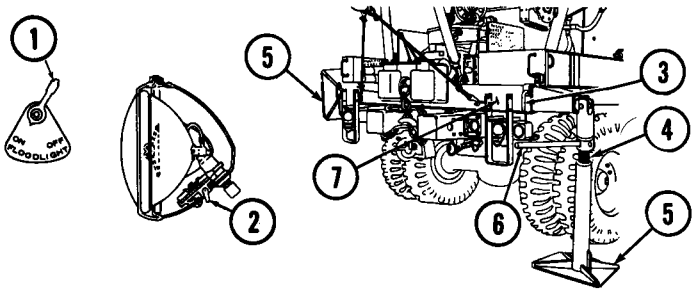


**WARNING**

Outrigger is heavy. Stand clear of outrigger to avoid injury.

**NOTE**

Complete the following procedures for each of the four outriggers.

- Steps c through h require two crewmembers.
- Delete steps c through h to raise vehicle for towing.

**(c)** Remove retainer clips from L-shaped pins (3) and remove pins (3).

**(d)** Grasp outrigger base (5) and pull out all the way.

**(e)** Swing outrigger base (5) down to the ground.

**(f)** Install L-shaped pin (3) in frame (7) and secure with retainer clips.

**(g)** Insert outrigger handle (6) into hole in outrigger collar (4) and turn collar (4) until base (5) encounters pressure against the ground. Make sure outrigger is straight up and down with base.

**(h)** Start engine (refer to paragraphs 2-12 and 2-13).

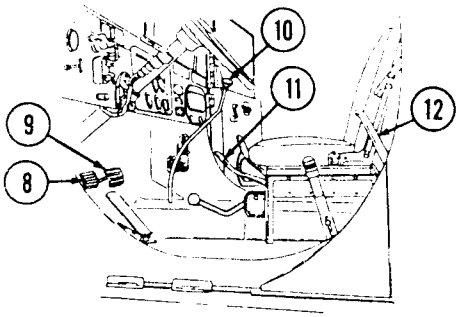


**(i)** Depress clutch pedal (8) all the way and place transfer selector lever (11) in "N" (neutral) position.

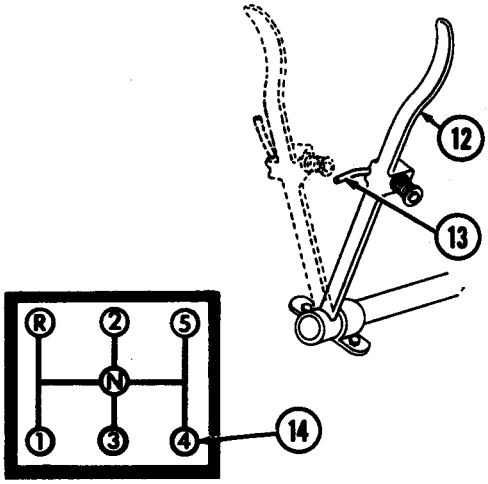


**(j)** Place gearshift lever (10) in "4" (fourth) gear (14).

**(k)** Move power divider control lever lock (13) to unlocked position and push power divider control lever (12) down to engaged position. Release clutch pedal (8) slowly.

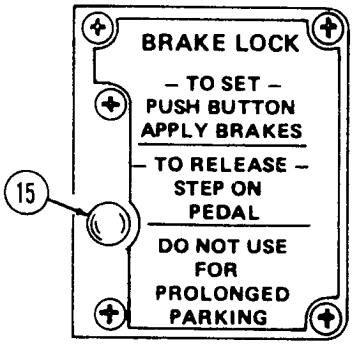


**(l)** Press electric brake lock button (15) and hold. Depress service brake pedal (9) down all the way and release. Release brake lock switch button (15).

**NOTE**

Brakes are now locked in place and remain locked until brake pedal is depressed and released again.

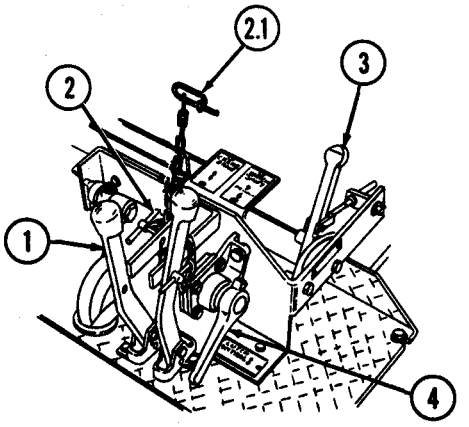


**(m)** Move engine clutch control lever (4) to disengage position.

**(n)** Remove safety pin (2.1) and lockpin (2) from crane drive control lever (1).

**(o)** Move crane drive control lever (1) to ENGAGE position.

**(p)** Move engine clutch control lever (4) to engage position.

**(q)** Move throttle control lever (3) forward to engaged position.

**(r)** Lower hoist block (5) and remove boom hook tiedown sling (6).

**CAUTION**

Check engine rpm. It should stabilize at 1250 ± 50 rpm. Excessive rpm will cause damage to vehicle.

**NOTE**

Engine speed will automatically adjust to 1250 ± 50 rpm by injection governor.

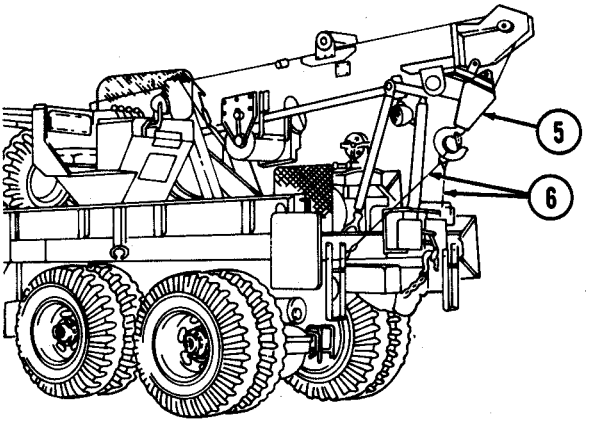


**WARNING**

When lifting heavy loads, shipper braces must be adjusted for lift height. Equipment failure can result in injury or death.

TA 094366

**CAUTION**

Shipper brace must be used for traveling or for lifting heavy loads without swinging boom. Braces are used to prevent damage to boom.

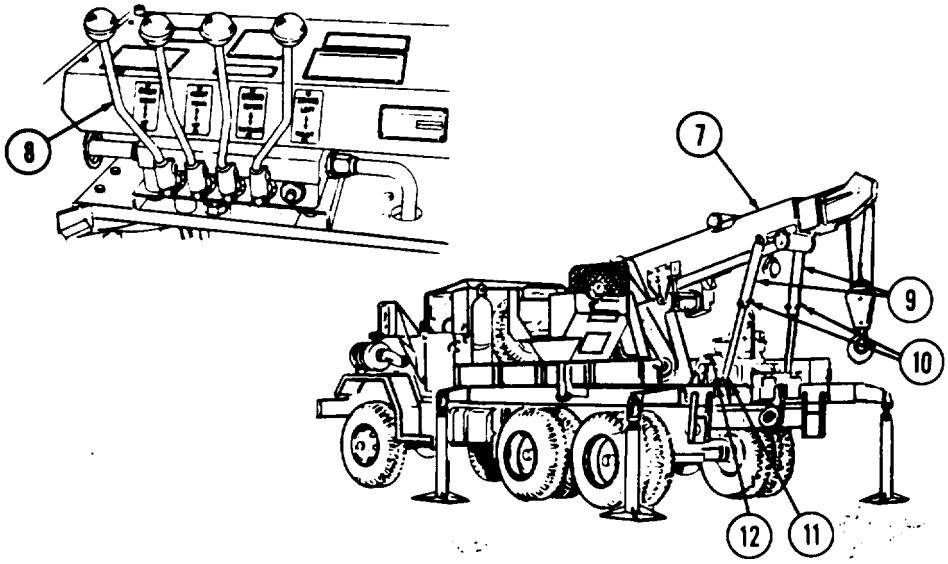


**(s)** Remove T-shaped pins ( 10) in braces (9). Raise or lower boom to remove pressure on pins.

**(t)** Move boom control lever (8) to UP position to raise boom (7).

**WARNING**

Do not raise shipper brace beyond third hole from bottom. Equipment failure can result in injury or death.

**(u)** Aline holes at desired length in brace and secure with pins (10).

**(v)** Join end braces (9) with brace bracket (12) and secure with pins (1 1).

**NOTE**

If more height is needed than full length of shipper braces allow, use boom jacks. Refer to d., step 4 for installation of boom jacks.

**(w)** Lower boom (7) by moving boom control lever (8) to DOWN position.

TA 094367

**(2) Lifting the Load,**

**WARNING**

Personnel must stand clear of crane and load during crane operation. A snapped cable, shifting or swinging load, can cause injury to personnel.

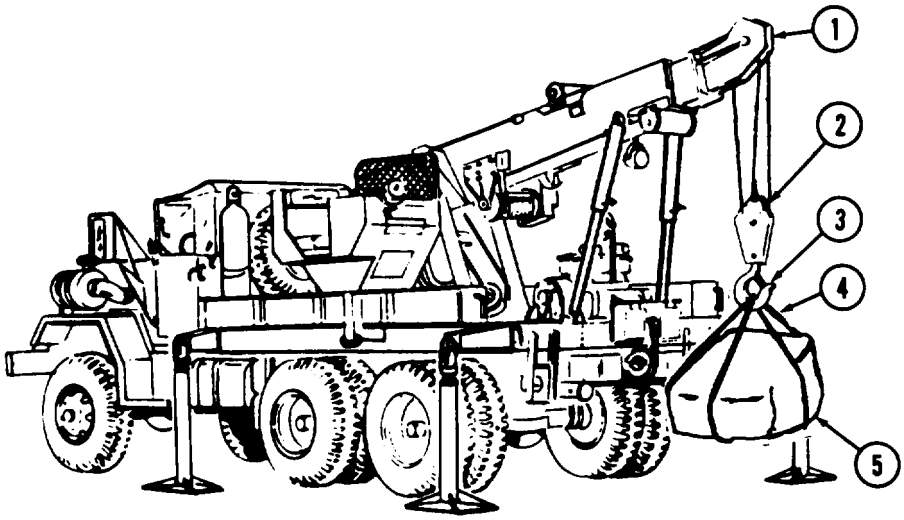


**NOTE**

Consult crane capacity data plate for load limits before raising or lowering load.

**(a)** Wrap lifting device (4) around load (5) to be lifted,

**CAUTION**

Do not pay out cable after hook has reached load. Cable on drum will loosen and may kink.

TA 094360

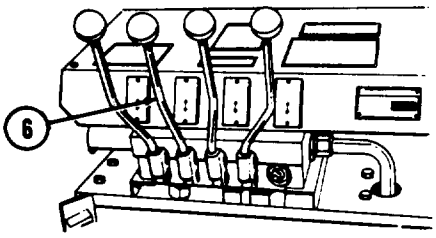


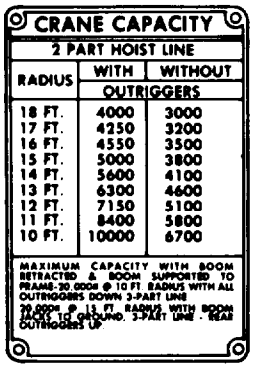

CRANE CAPACITY

2 PART HOIST LINE

| RADIUS | WITH OUTRIGGERS | WITHOUT OUTRIGGERS |
|---|---|---|
| 18 FT. | 4000 | 3000 |
| 17 FT. | 4250 | 3200 |
| 16 FT. | 4550 | 3500 |
| 15 FT. | 5000 | 3800 |
| 14 FT. | 5600 | 4100 |
| 13 FT. | 6300 | 4600 |
| 12 FT. | 7150 | 5100 |
| 11 FT. | 8400 | 5800 |
| 10 FT. | 10000 | 6700 |

MAXIMUM CAPACITY WITH BOOM RETRACTED & BOOM SUPPORTED TO FRAME-20,000# @ 10 FT. RADIUS WITH ALL OUTRIGGERS DOWN 3-PART LINE

20,000# @ 13 FT. RADIUS WITH BOOM TILTED TO GROUND. 3-PART LINE . REAR OUTRIGGERS UP

(b) Move hoist control lever (6) to DOWN position to bring hook down to load (5).

(c) Secure hook (3) to lifting device (4).

**CAUTION**

Do not bring block (2) up too fast to avoid jamming inside boom (1). Damage to boom and block can result.

(d) Move hoist control lever (6) to UP position to raise load (5).

(e) Move hoist control lever (6) to DOWN position to lower load (5).

**WARNING**

Before removing hook from lifting device, block load to prevent tipping or shifting. A falling or shifting load can cause injury to personnel.

(f) Remove hook (3) from load (5) and move hoist control lever (6) to UP position to raise hook (3).

TA 094369

**(3) Lifting and Swinging the Load.**

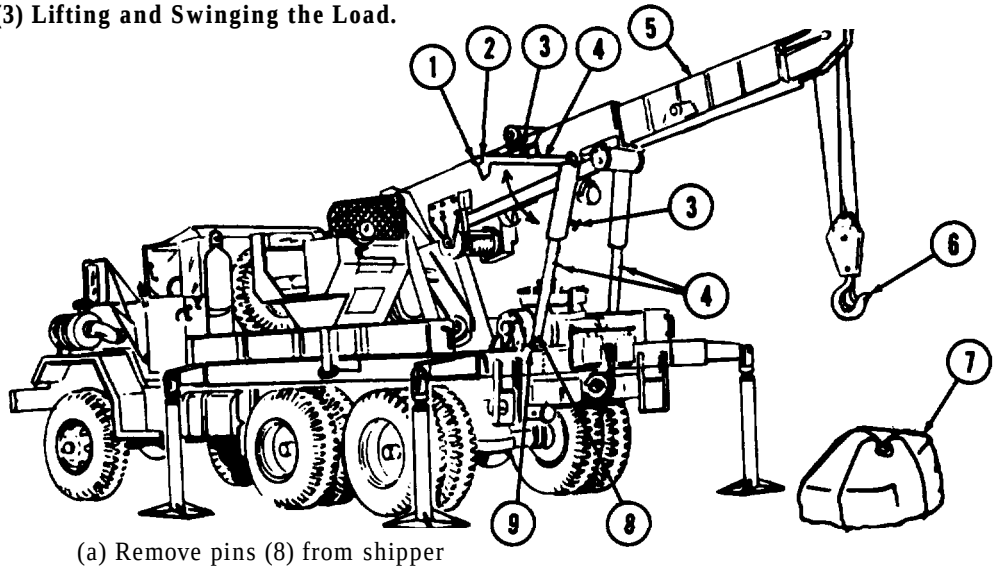


(a) Remove pins (8) from shipper braces (4) and brace brackets (9).

(b) Swing brace (4) up to retaining bracket (2).

**NOTE**

It may be necessary to raise or lower boom to remove T-shape pin.

(c) To adjust shipper brace (4) to bracket (2), remove T-shaped pin (3) and install in higher or lower hole as needed.

(d) Secure braces (4) to retaining bracket (2) with clip (1).

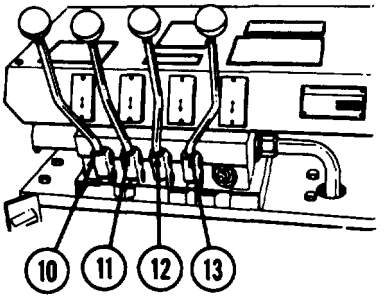


**CAUTION**

When boom is extended, move hoist and crowd control levers at same time to prevent crane block from jamming inside boom.

**NOTE**

Consult crane capacity data plate for load limits before raising or lowering load.

(e) To extend boom (5), move hoist control lever (11) to DOWN position, and crowd control lever (12) to EXTEND position.

(f) To retract boom (5), move hoist control lever (11) to Up position, and crowd control lever (12) to RETRACT position.

(g) To raise boom (5), move boom control lever (10) to UP position.

(h) To lower boom (5), move boom control lever (10) to DOWN position.

(i) To lift load (7), move hoist control lever (11) to UP position.

**WARNING**

Make sure path is clear before swinging load. Damage to crane/load and injury to personnel may result.

TA 094370

(j) To swing load left, move swing lever (13) to LEFT position.

(k) To swing load right, move swing lever (13) to RIGHT position.

(l) Move hoist control lever (11) to DOWN position to lower load (7) to ground.

**WARNING**

Before removing hook from lifting device, block load to prevent tipping or shifting. A falling or shifting load can cause injury to personnel.

(m) Remove hook (6) from load (7) and move hoist control lever (11 ) to UP position to raise hook (6).

**(4) Heavy Rear Lifting.**

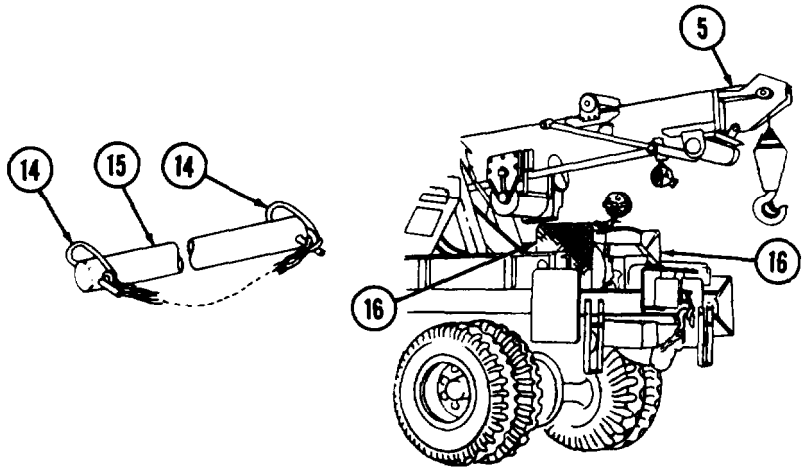


(a) Remove base plates (16) from rear winch

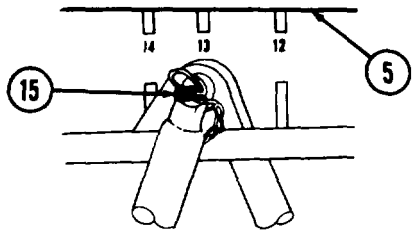


**CRANE CAPACITY**

| RADIUS | 2 PART HOIST LINE WITH OUTRIGGERS | 2 PART HOIST LINE WITHOUT OUTRIGGERS |
|---|---|---|
| 18 FT. | 4000 | 3000 |
| 17 FT. | 4250 | 3200 |
| 16 FT. | 4550 | 3500 |
| 15 FT. | 5000 | 3800 |
| 14 FT. | 5600 | 4100 |
| 13 FT. | 6300 | 4600 |
| 12 FT. | 7150 | 5100 |
| 11 FT. | 8400 | 5800 |
| 10 FT. | 10000 | 6700 |

MAXIMUM CAPACITY WITH BOOM RETRACTED & BOOM SUPPORTED TO FRAME: 20 000# @ 10 FT RADIUS WITH ALL OUTRIGGERS DOWN 3-PART LINE
20 000# @ 13 FT RADIUS WITH BOOM JACKED TO GROUND 3-PART LINE REAR OUTRIGGERS

(b) Move hoist control lever (11) to DOWN position and crowd control lever (12) to EXTEND position to extend boom (5) to the 15-foot mark.

(c) Remove lockpins (14) from inner jackpin (15).

(d) Install inner jack pin (15) at 13-foot mark on boom (5).

TA 094371

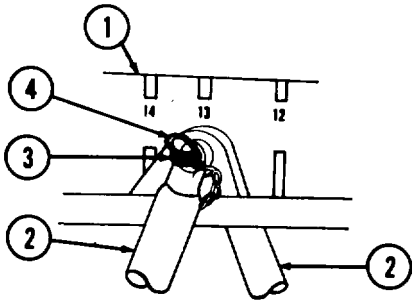


(e) Install boom jacks (2) on inner jack pin (3) and secure with lockpins (4). Lengthen or shorten boom jacks (2) by moving retaining pins (5) and lockpins, if needed.

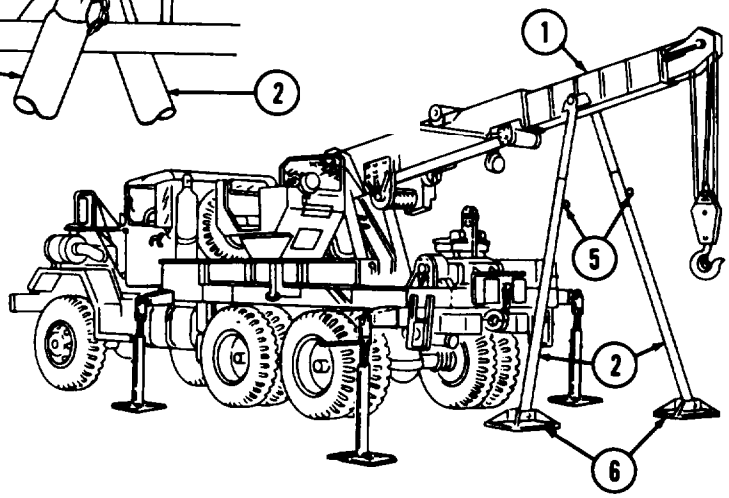


(f) Position tie bar (9) between boom jacks (2) and secure with T-shaped pins (8) and lockpins (10).

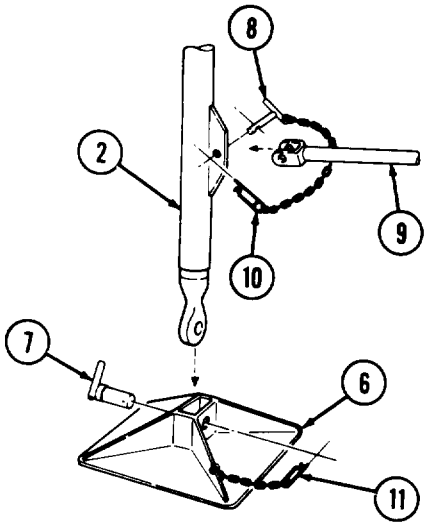


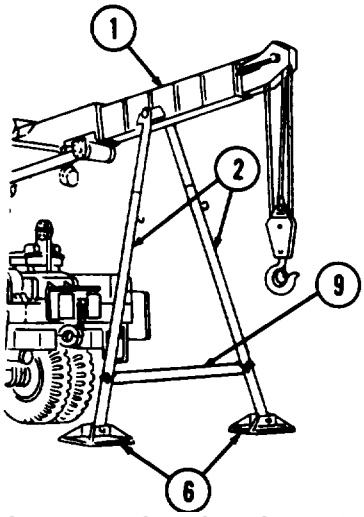


(g) Position base plates (6) to boom jacks (2) and secure with L-shaped pins (7) and lockpins (11).

**NOTE**

Make sure boom jacks are supporting boom and base plates are securely positioned on ground surface.

(h) To lift load, move hoist control lever to UP position.

TA 094372

**(5) Heavy Side Lifting.**

**NOTE**

Procedures for heavy side lifts are the same as for heavy rear lifts (refer to step 1 above) except for side positioning of boom jacks.

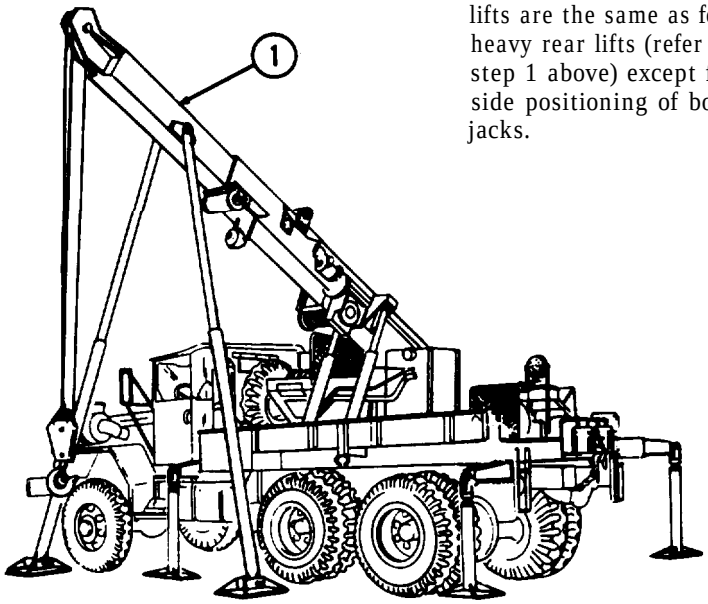


**(6) Preparing for Travel.**

**NOTE**

Boom jacks, tie bar, jack pin, base plates, and outriggers must be removed and stowed when vehicle is traveling.

(a) Raise boom (1) to take weight off boom jacks (2).

(b) Remove lockpins (11) and L-shaped pins (7) from base plates (6).

(c) Remove base plates (6) from boom jacks (2).

(d) Remove lockpins (10), T-shaped pins (8), and tie bar (9) from boom jacks (2).

TA 094373

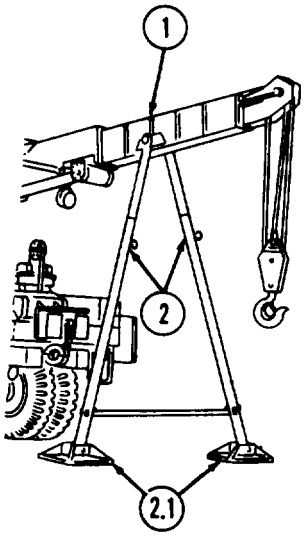


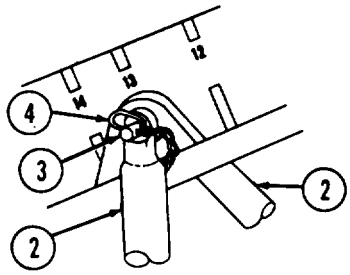


(e) Remove lockpins (4) from jack pin (3).

(f) Remove boom jacks (2) from jack pin (3) and remove jack pin (3).

(f.1) Stow base plates (2.1) on rear winch.

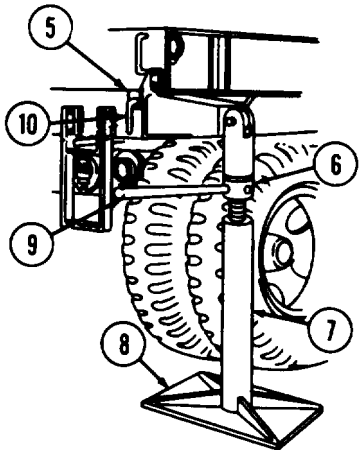


(g) Insert handle (9) in outrigger collar (6) and turn until outrigger base (8) rises off ground its full length of travel.

(h) Remove L-shaped pin (10) from frame (5), swing outrigger base (8) up, slide outrigger shaft (7) into frame (5) all the way, and secure in place with L-shaped pin (10).

**CAUTION**

Shipper braces must be positioned in place to support crane boom when vehicle is traveling to prevent damage to crane.

(i) Remove clips (11) securing shipper braces (12) to boom (1).

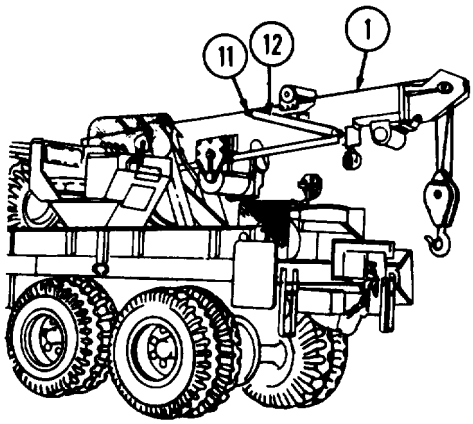


TA 094374

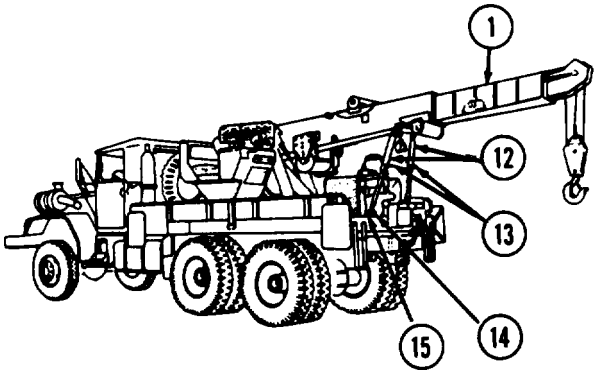


(j) Swing boom (1) right or left to center on vehicle.

(k) Retract boom (1) all the way.

(l) Swing braces (12) down.

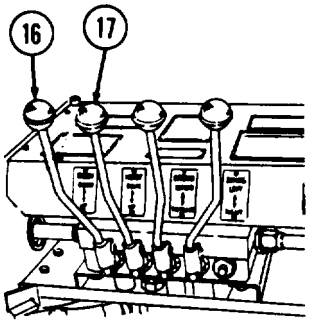


(m) Adjust shipper brace (12) length by removing T-shaped pins (13) to lengthen or shorten braces (12), and reinstall T-shaped pins (13).

(n) Adjust boom (1) up or down by moving boom control lever (16) to UP or DOWN positions. When braces (12) have been properly alined with brackets (14), secure in place with L-shaped pins (15).

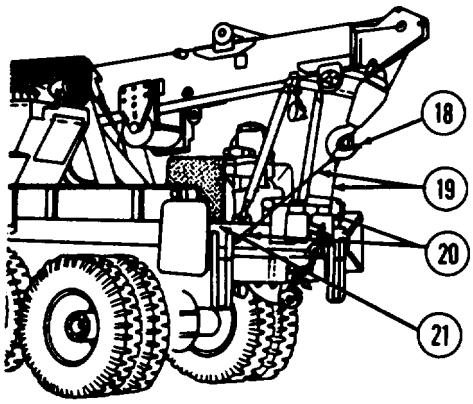


(o) Place sling (19) on hook (18) and secure to eyes (20) on body (21).

(p) Move hoist control lever (17) to UP position to raise hook (18) and take up cable slack.

TA 094375

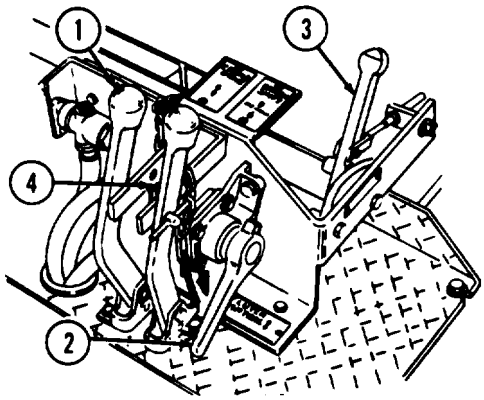


(q) Move throttle control lever (3) rearward all the way.

(r) Move engine clutch control lever (2) to disengage position.

(s) Ensure crane drive control lever (1) is in DISENGAGE position.

(t) Install lockpin (4) in crane drive control lever (1) to lock in place.

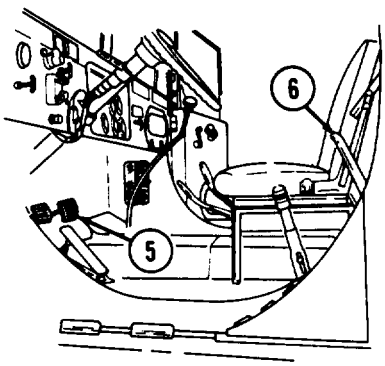


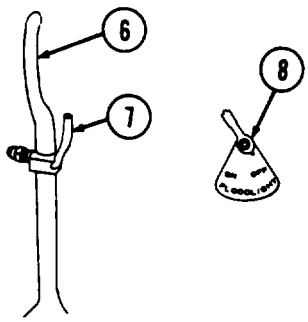


(u) Move power divider control lever (6) up until lock (7) snaps in place.

(v) Depress and release service brake pedal (5) to disengage electric brake lock.

(w) Ensure main floodlight switch (8) is in OFF position.

(x) Depress clutch pedal (13).

(y) Place transfer selector lever (11) in LOW or HIGH range, depending upon need.

(z) Shut down engine (refer to paragraph 2-16).

TA 094376

**b. Operation of Wrecker Crane (M819).**

**WARNING**

**HIGH INTENSITY NOISE**

Hearing protection is required for all personnel working in and around this vehicle with the engine running.

**NOTE**

Positioning of the M819 wrecker for crane operation is the same as for the M816 vehicle for rear winch and crane operations.

**(1) Lifting and Swinging the Load.**

(a) Start engine (refer to paragraphs 2-12 and 2-13).

(b) Move main floodlight switch (8) to ON position for night operation. Move switch (9) to ON for each floodlight to be used.

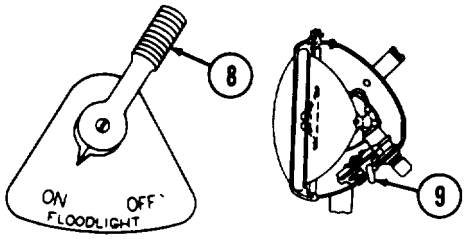


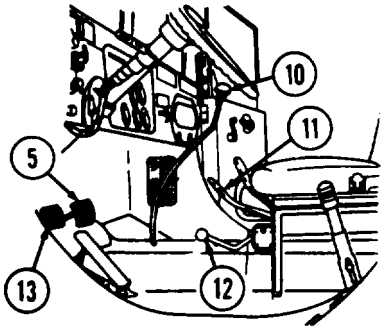


(c) Depress clutch pedal (13) all the way.

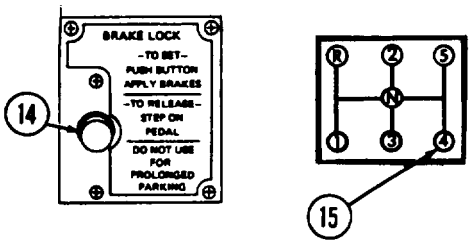


(d) Move gearshift lever (10) to "4" (fourth) gear (15).

(e) Move transfer selector lever (11) to "N" (neutral) position.

(f) Move transfer power takeoff lever (12) up all the way.

(g) Release clutch pedal (13) slowly.

(h) Pull hand throttle out until engine speed registers 1,250 rpm.

(i) Depress service brake pedal (5).

(j) Press electric brake lock switch button (14) and release service brake pedal (5). Release lock switch button (14).

**NOTE**

Lifting device can be utility chains or cable slings, or any special device made to lift load.

TA 094377

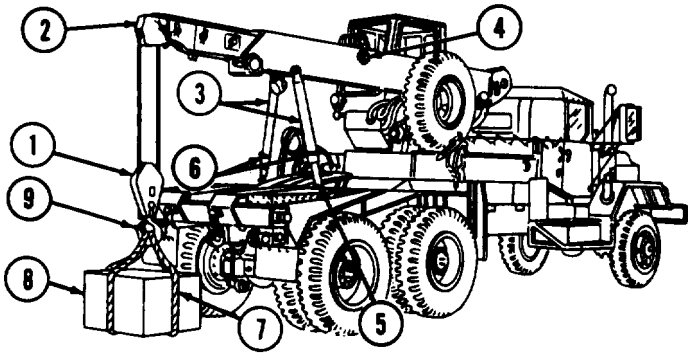


**WARNING**

During crane operation, tell all personnel to stand clear of crane and load. A snapped cable, shifting or swinging load can be very dangerous.

**CAUTION**

- Do not pay out cable after the hook has reached the load. Cable on drum will loosen and may kink.
- When boom is extended, move hoist and crowd control levers together to prevent crane block from being jammed in boom.

**NOTE**

Consult crane capacity data plate for load limits before raising or lowering load.

**SAFE LOAD CHART**

| RADIUS | WITH OUTRIGGERS LOAD IN LBS. | WITHOUT OUTRIGGERS LOAD IN LBS. | MAXIMUM CAPACITY |
|---|---|---|---|
| 11 FT 6 IN. | 10,000 | 5,200 | 20,000 # AT 15 FT RADIUS WITH BOOM JACKS TO GROUND, REAR OUTRIGGERS UP, & 3 PART LINE. |
| 12 FT | 9,000 | 4,750 | |
| 13 FT | 8,800 | 4,275 | |
| 14 FT | 8,200 | 3,800 | **WARNING** |
| 15 FT | 7,650 | 3,500 | PIN FOR BOOM JACKS TO BE INSERTED THRU BOOM AND EXTENSION – NOT THRU EXTENSION ONLY. |
| 16 FT | 7,200 | 3,175 | |
| 17 FT. | 6,750 | 2,950 | |
| 18 FT | 6,400 | 2,700 | |
| 19 FT | 6,000 | 2,500 | |
| 20 FT. | 5,750 | 2,300 | WHEN USING BOOM JACKS, PROVIDE SOLID FOOTING FOR BASES, THEN RELIEVE LOAD OFF BOOM RAM WITH BOOM LEVER. |
| 21 FT. | 5,450 | 2,200 | |
| 22 FT | 5,200 | 2,100 | |
| 23 FT | 5,000 | 2,000 | |
| 24 FT | 4,800 | 1,950 | |
| 25 FT. | 4,650 | 1,825 | |
| 26 FT. | 4,500 | 1,700 | |

MAXIMUM CAPACITY WITH BOOM RETRACTED TO 11 FT. 6 IN. RADIUS, WITH 2-PART LINE AND BOOM SUPPORTED TO FRAME – 10,000#. MAXIMUM CAPACITY WITH BOOM RETRACTED TO 11 FT. 6 IN. RADIUS, WITH 2-PART LINE AND ALL OUTRIGGERS DOWN – 10,000#.

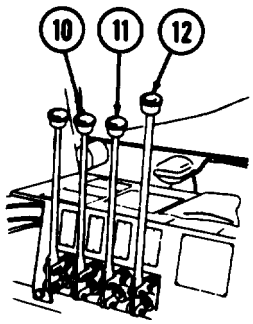


(k) Place lifting device (7) around load (8).

(l) Move hoist lever (10) to DOWN position to lower hook (9) to load (8).

(m) Secure hook (9) to lifting device (7).

TA 094378

**CAUTION**

Do not raise block (1) too high to prevent jamming inside boom (2). Damage to boom and block can result.

(n) Move hoist lever (10) to UP position to raise load (8).

**WARNING**

Before swinging load right or left, make sure load path is clear of obstructions to prevent damage to vehicle and/or injury to personnel.

(o) Remove L-shaped pins (5) securing shipper braces (3).

(p) Swing braces (3) up to brackets (4). Adjust brace length by moving L-shaped pin (6) to next higher or lower hole. Secure braces (3) to bracket (4) with L-shaped pins (5).

(q) Move swing lever (12) to LEFT position to swing load (8) left, and move lever (12) to RIGHT to swing load right.

(r) Move hoist lever (10) to UP position and move crowd lever (11 ) to EXTEND position at same time to move load (8) out.

(s) Move hoist lever (10) to DOWN position to lower load (8).

**WARNING**

Before removing hook from lifting device, block load to prevent tipping or shifting. A falling or shifting load can cause injury to personnel.

(t) Remove hook (9) from lifting device (7).

(u) Move hoist lever (10) to UP position and raise hook (9).

**(2) Positioning the Crane Supports.**

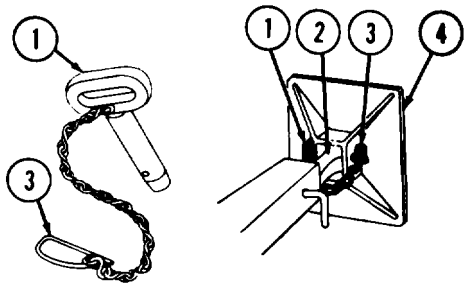


(a) Install outrigger base plates (4) on rear outriggers (2) and secure with retaining pin (1) and lockpin (3).

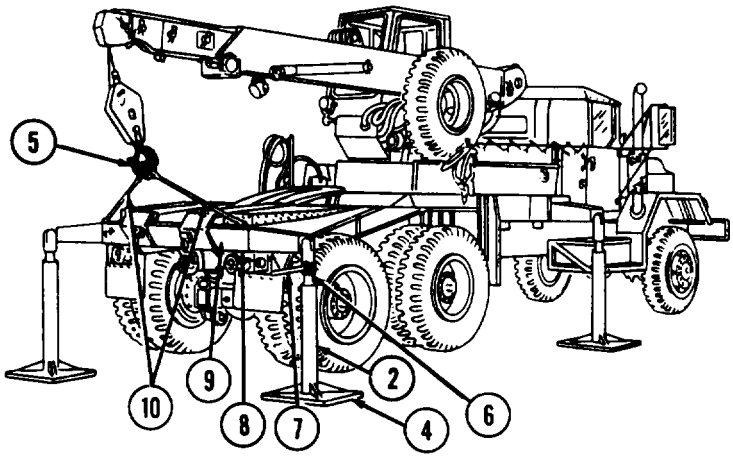


(b) Remove L-shaped pin (8), grasp outrigger base plate (4), and swing outrigger (2) down to touch ground.

(c) Install L-shaped pin (8) in end frame (9).

(d) Use handle (7) to turn outrigger collar (6) left or right, as required, to rest base plate (4) flat on ground; continue turning until pressure is felt when base plate (4) touches ground. Repeat procedures for three remaining outriggers (2).

**NOTE**

Make sure outrigger (2) stands straight when resting against ground.

(e) Secure shipper braces in travel position (refer to step 6, i through m above).

TA 094380

(f) Remove slings (10) from hook (5).

**NOTE**

Before installing shipper braces to support boom, boom must be positioned at center of vehicle facing to rear.

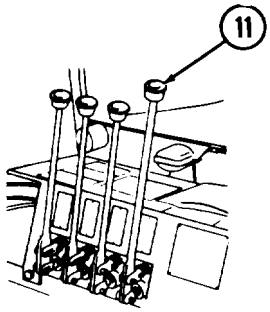


(g) Move swing control lever (11) to RIGHT position to swing crane (12) right, and move to LEFT position to swing crane (12) left.

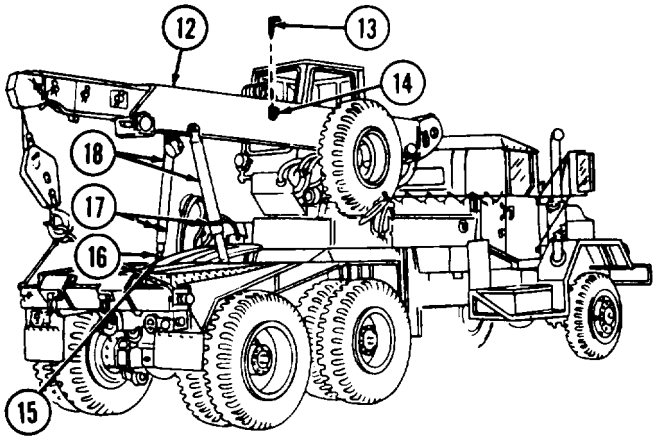


**NOTE**

If boom jacks are used for high lifting operations, two rear outrigger base plates must be used with boom jacks.

(h) Remove L-shaped pins (16) securing shipper braces (18) to brackets (15).

(i) Swing braces (18) up and change length by moving T-shaped pin (17) to next higher or lower hole.

(j) Secure braces (18) to brackets (14) with L-shaped pins (13).

TA 094381

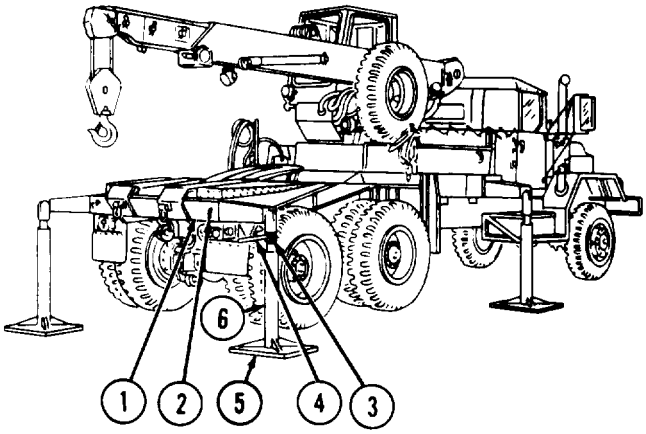


(k) Use outrigger handle (4) to turn collar (3) to lift base plate (5) from ground.

(l) Remove L-shaped pin (2) from end frame (1).

(m) Swing outrigger (6) up and slide into vehicle end frame (1).

**NOTE**

- Repeat steps (k) through (m) for opposite rear outrigger and forward outriggers.
- Steps (n) and (o) are required for rear outrigger only.

(n) Remove lockpin (9) and retaining pin (8). Remove base plate (5).

(o) Install L-shaped pin (2) in outrigger (7).

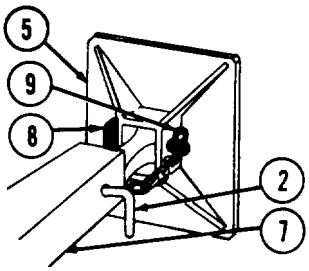


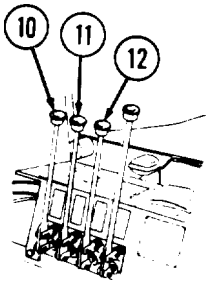


(p) Move boom lever (10) to DOWN position to lower boom (13) all the way.

TA 094382

(q) Install jack pin (17) in boom (13), position boom jacks (15) on jack pin (17) and secure with lockpins (16).

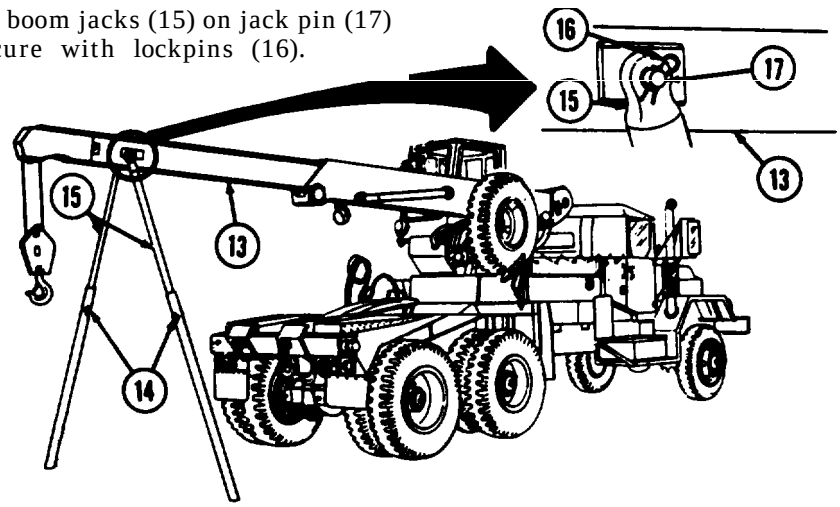


(r) Move hoist lever (11) to DOWN position and crowd lever (12) to EXTEND position to extend boom (13) all the way

(s) Position tie bar (20) on boom jack brackets (18) and secure with T-shaped pins (19) and lockpins (21).

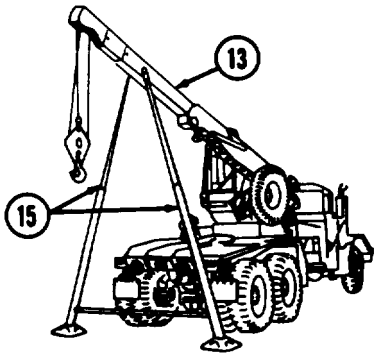


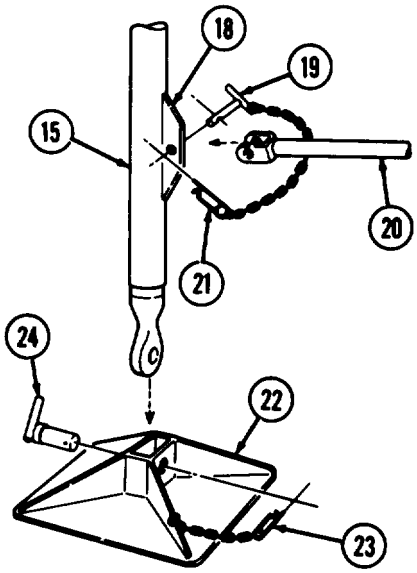


(t) Position base plates (22) on boom jacks (15) and secure with L-shaped pins (24) and lockpins (23).

(u) Extend boom (13) to length required, and adjust boom jack (15) length as required. Secure with retaining pins (14) and lockpins.

TA 094383

**(3) Extending and Retracting Boom Extension.**

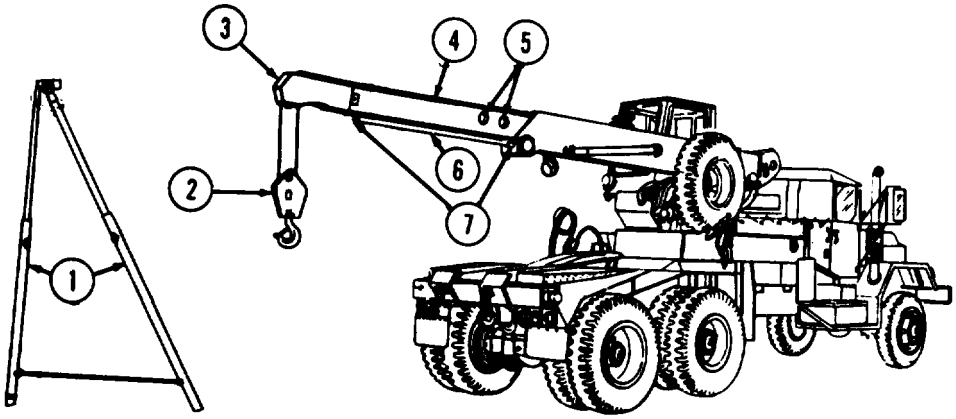


**NOTE**

Consult crane capacity data plate for load limits before raising or lowering load.

(a) Remove and stow boom jacks (1) assembly.

(b) Remove clips (9) and lockpins (8).

(c) Extend boom (4) all the way by pushing crowd control lever (15) forward to EXTEND position and hoist control lever (14) to DOWN position.

(d) Assemble three-piece pushout rod (6).

(e) Position rod (6) between brackets (7).

(f) Retract boom (4) to aline with holes (5) in boom extension (3) by pulling crowd control lever (15) to RETRACT position.

(g) Install lockpins (8) and secure with clips (9).

(h) Remove, disassemble, and stow boom extension pushout rod (6).

(i) To retract boom extension (3), remove clips (9) and lockpins (8). Pull hoist control lever (14) to UP position, slowly, allowing block (2) to push boom extension (3) towards boom (4) until holes (5) are alined.

**SAFE LOAD CHART**

| RADIUS | WITH OUTRIGGERS LOAD IN LBS. | WITHOUT OUTRIGGERS LOAD IN LBS. | MAXIMUM CAPACITY |
|---|---|---|---|
| 11 FT. 6 IN. | 10,000 | 5,200 | 20,000 # AT 15 FT RADIUS WITH BOOM JACKS TO GROUND, REAR OUTRIGGERS UP, & 3 PART LINE |
| 12 FT. | 9,000 | 4,750 | |
| 13 FT. | 8,800 | 4,275 | |
| 14 FT. | 8,200 | 3,800 | **WARNING** |
| 15 FT. | 7,650 | 3,500 | PIN FOR BOOM JACKS TO BE INSERTED THRU BOOM AND EXTENSION — NOT THRU EXTENSION ONLY. |
| 16 FT. | 7,200 | 3,175 | |
| 17 FT. | 6,750 | 2,950 | |
| 18 FT. | 6,400 | 2,700 | |
| 19 FT. | 6,000 | 2,500 | |
| 20 FT. | 5,750 | 2,300 | WHEN USING BOOM JACKS, PROVIDE SOLID FOOTING FOR BASES. THEN RELIEVE LOAD OFF BOOM RAM WITH BOOM LEVER. |
| 21 FT. | 5,450 | 2,200 | |
| 22 FT. | 5,200 | 2,100 | |
| 23 FT. | 5,000 | 2,000 | |
| 24 FT. | 4,800 | 1,950 | |
| 25 FT. | 4,650 | 1,825 | |
| 26 FT. | 4,500 | 1,700 | |

MAXIMUM CAPACITY WITH BOOM RETRACTED TO 11 FT. 6 IN. RADIUS, WITH 2-PART LINE AND BOOM SUPPORTED TO FRAME — 10,000#.
MAXIMUM CAPACITY WITH BOOM RETRACTED TO 11 FT. 6 IN. RADIUS, WITH 2-PART LINE AND ALL OUTRIGGERS DOWN — 10,000#

(j) Install lockpins (8) and secure with clips (9).

TA 094384

**(4) Preparation for Travel Without Semitrailer.**

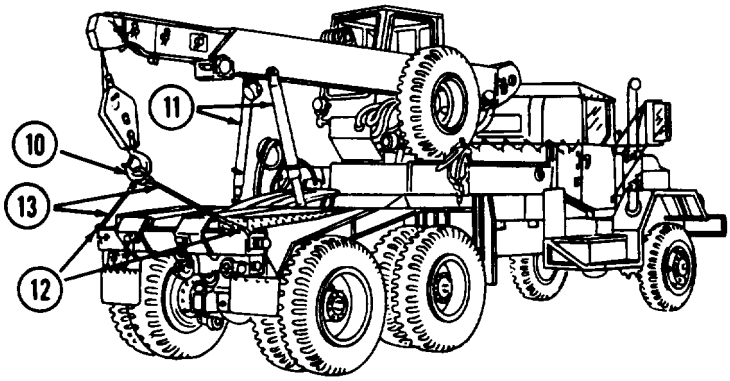


(a) Lower and secure shipper braces (11).

(b) Secure lifting slings (13) to hook (10) and outrigger frame tube (12).

(c) Move transfer power takeoff lever (18) to engaged position.

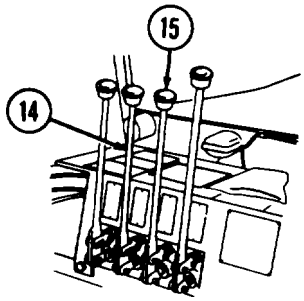


(d) Move hoist lever (14) to UP position to remove slack in slings (13).

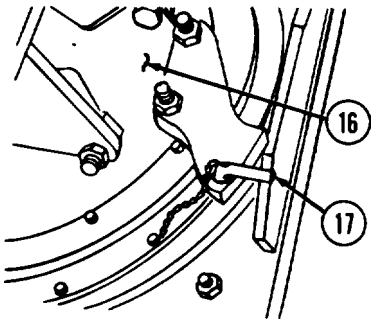


(e) Install pivot post lockpin (17) in crane pivot post (16).

(f') Move power takeoff lever (18) down to disengage position.

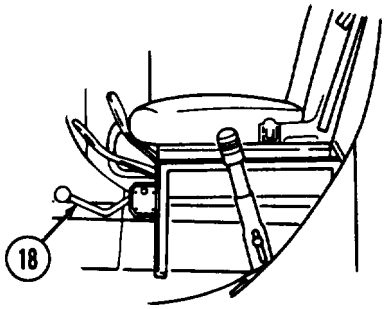


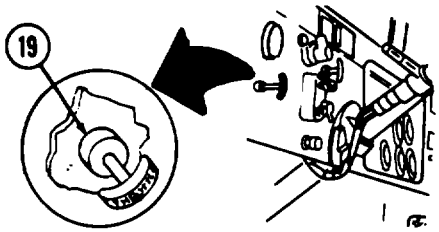


(g) Move hand throttle (19) to return engine speed to idle. Shut down engine (refer to paragraph 2-16).

TA 094385

**(5) Preparation for Travel With Semitrailer.**

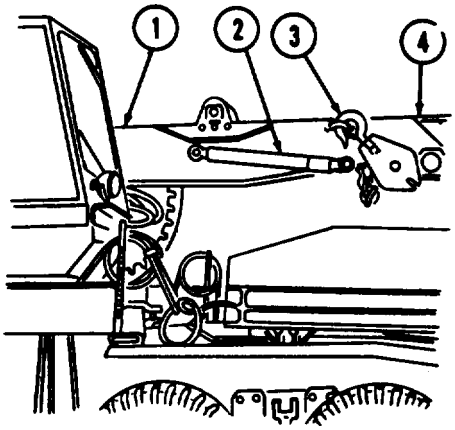


(a) When trailer is towed, stow shipper braces (2) on boom (1).

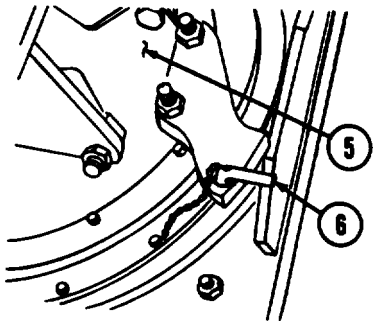


(b) Install pivot post lockpin (6) in pivot post (5).

(c) Move transfer power takeoff lever (10) to engaged position.

(d) Move boom lever (7) to DOWN position to lower boom extension (4) all the way.

(e) Move hoist control lever (8) to DOWN position to lower hook (3).

(f) Move crowd control lever (9) to RETRACT to bring boom extension (4) in all the way.

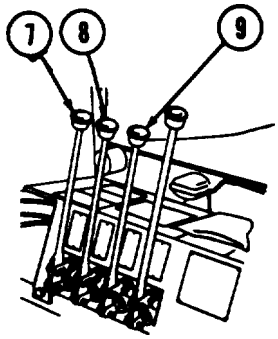


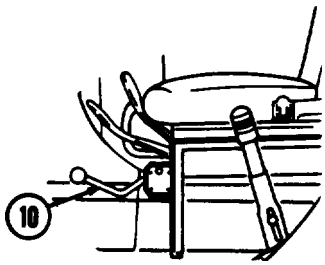


(g) Move transfer power takeoff lever (10) to disengage position.

(h) Move hand throttle (11) to return engine speed to idle. Shut down engine (refer to paragraph 2-16).

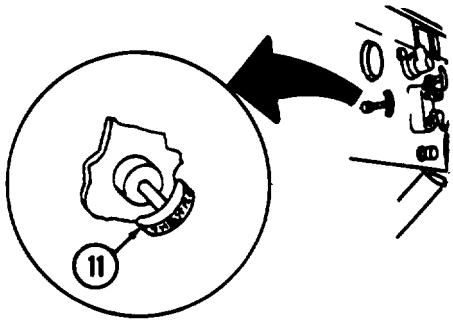


TA 094386

## 2-29. OPERATION OF EXPANSIBLE VAN TRUCKS

**a. General.** Expansible van trucks have van bodies which are 98 inches (249 centimeters) wide when the truck is being moved, 167 inches (424.2 centimeters) wide when the vehicle is in place and the van body is fully expanded. M820 models have windows, heating and air-conditioning systems, and use outside electric power. M820A1 models lack windows and air-conditioning system.

***Table 2-4. Differences in Models***

| Designation | Window | Liftgate (Power) | Heating | Air Conditioning |
|---|---|---|---|---|
| M820 | Yes | No | Yes | Yes |
| M820A1 | No | No | Yes | No |
| M820A2 | Yes | Yes | Yes | Yes |

***Table 2-5. Air Conditioners***

| Air Conditioning | Model No. | NSN | Manuals | |
|---|---|---|---|---|
| | | | Operation/ Maintenance | Parts |
| York | MA3-F23A | 4120-00-926-1116 | TM 5-4120-259-15 | TM 5-4120-259-25P |
| Therm Air | CB-36-08-3-60 | 4120-00-935-5348 | TM 5-4120-259-15 | TM 5-4120-259-25P |
| ZEKS Ind. | AC 36M | 4120-00-168-1791 | TM 5-4120-310-15 | TM 5-4120-310-23P |

**b. Selecting Operating Site.** Whenever possible, position van on level, firm ground.

**WARNING**

Always chock truck wheels if operating site is on a grade, no matter how slight. Fill low spots under wheels with sand or similar materials, if needed, to get a nearly level floor line. Failure to do this can result in injury, death, or damage to vehicle.

**NOTE**

Pick the site with care so that van will be as level as possible. Jacks provided are not used to raise van off wheels. Jacks are only used for leveling, with most of the weight on wheels.

TA 094387

**c. Leveling Van Body.**

(1) Remove four adjustable leveling jacks (4) and footpads (5) from stowage compartment on rear of van body.

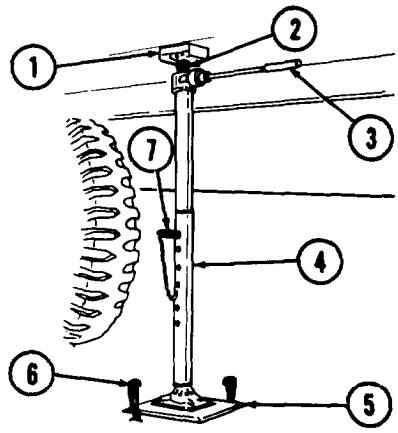


(2) Attach footpad (5) to bottom of each jack (4). Assemble and install inner and outer tubes of jack (4) and adjust length to approximate height of brackets (1) at each corner of van. Secure jack (4) with chained pin (7).

(3) Insert upper foot (2) of jack (4) into bracket (1). Install jack handle (3) and unscrew jack (4) until footpads (5) are in firm contact with ground. Anchor each jack footpad (5) with two jack spikes (6). Do not attempt to raise entire van off ground with leveling jacks.

(4) Repeat procedure at each corner of van until body is level.

**d. Power Liftgate Operation (M820A2 Only).**

(1) To remove ladders (10) from Liftgate (8):

(a) Remove eyebolts (11) securing ladders (10) to liftgate (8).

**NOTE**

This operation requires two crewmembers.

(b) Lift ladders (10) off ladder hooks (9) and lower.

(2) To prepare for power liftgate operation:

TA 094388

(a) Start engine (refer to paragraphs 2-12 or 2-13).

(b) Place transfer selector lever (15) in "N" (neutral).

**WARNING**

Direct all personnel to stand clear of vehicle when engaging transmission or transfer. Failure to do this can result in injury or death.

(c) With parking brake applied, and clutch pedal (19) depressed, place transmission gearshift lever (14) in "N" (neutral).

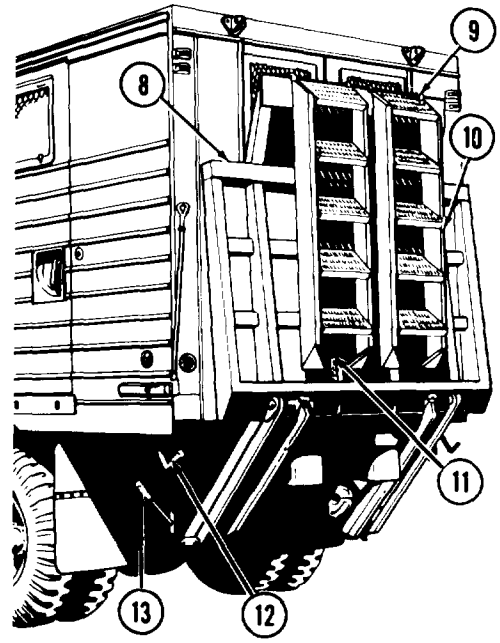


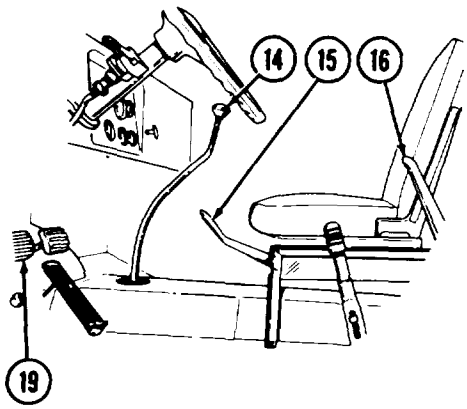


(d) Move transmission power takeoff lever (16) forward to engage position.

(e) Slowly release clutch pedal (19).

(f) Pull out hand throttle control (17) and set engine idle speed at 1000 to 1200 rpm as indicated by tachometer (18).

(g) To open power liftgate (8), move opening and closing control lever (12) toward rear of vehicle. Liftgate will stop automatically when fully open.

(h) To lower power liftgate (8), remove lever extension from cab stowage and install on lowering and elevating control lever (13) at van rear. Move lever (13) momentarily toward front of vehicle to release safety lock, then toward rear of vehicle. Liftgate will stop automatically at ground level.

(3) Depress clutch pedal (19) and move transmission power takeoff lever (16) back to disengage position.

(4) Stop engine (refer to paragraph 2-16).

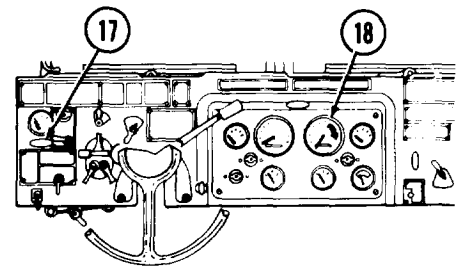


TA 094389

**e. Expanding Van Body.**

(1) M820 and M820A1 model vans without power liftgate:

(a) Release toggle clamp (2) securing right ladder (1).

**CAUTION**

Vehicle must be approximately level for expansion or retraction of van body.

**NOTE**

- This operation requires two crewmembers.
- Vans with power liftgate must lower gate before expanding van sides. Refer to d. for liftgate operating instructions (M820A2 only).

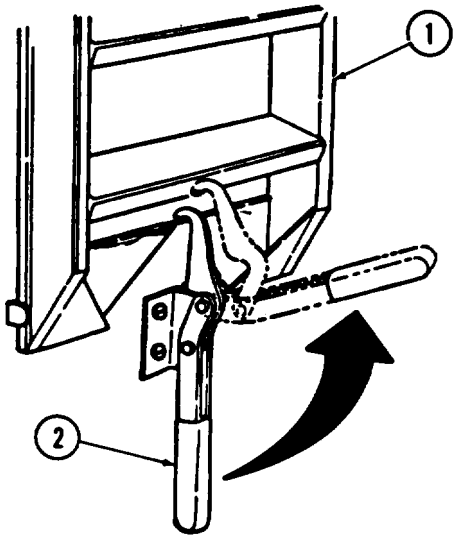


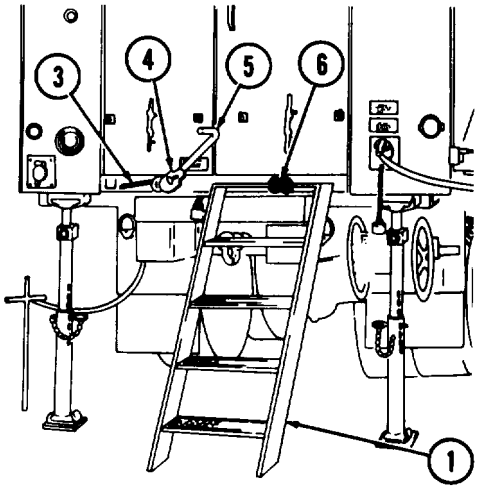


(b) Lift ladder (1) up and out to remove from rear door ladder mounting racks.

(c) Install ladder (1) in brackets below rear doors.

(2) Remove chained pin (8) from lock handle (9). Pull handle (9) out and disengage handle end from retaining bracket (7). Repeat procedure at all four van corners.

(3) Remove side panel lock wrench (11) and ratchet wrench (5) from holders inside left rear door.

(4) Turn four side locks ( 10) counter-clockwise with side panel lock wrench (11).

(5) Push locking plunger (3) downward to release ratchet (4).

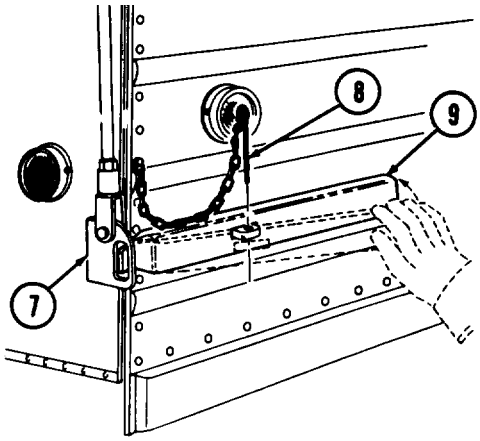


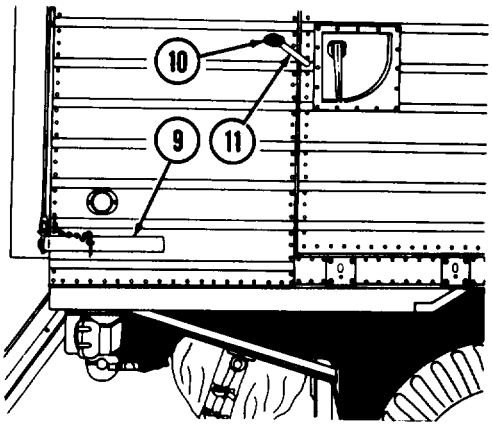


TA 094390

(6) Turn left ratchet (4) counterclockwise with ratchet wrench (5) to expand left side panel (13). Turn right ratchet (6) clockwise to expand right side panel (14). Crank both sides fully out.

(7) Unfold four end panels (15). Unclip and use side lockrod (17) to keep end panel door open and out of the way while roof (16) and floor panels (18) are being raised and lowered.

**WARNING**

Have crewmember support raised floor when operator turns hinged roof lock handle. Floor panel can fall, resulting in injury or death.

When unlocked, do not open hinged roof and floor panel from outside the van. Push open roof and floor panels from inside van only. Serious injury or death can result.

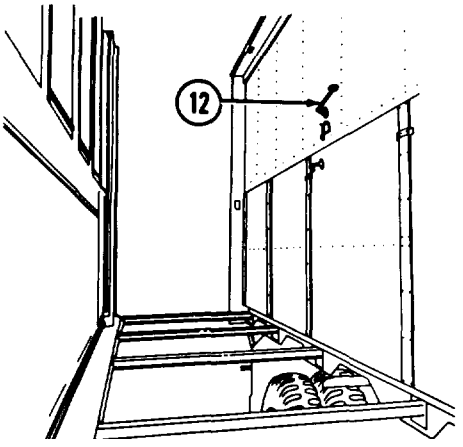


(8) Turn hinged roof lock handle (12) counterclockwise to release panel locks.

(9) From inside van, push hinged roof (16) and floor panel (18) outward. Step out onto floor panel (18) and lift roof panel (16) until panels are fully open.

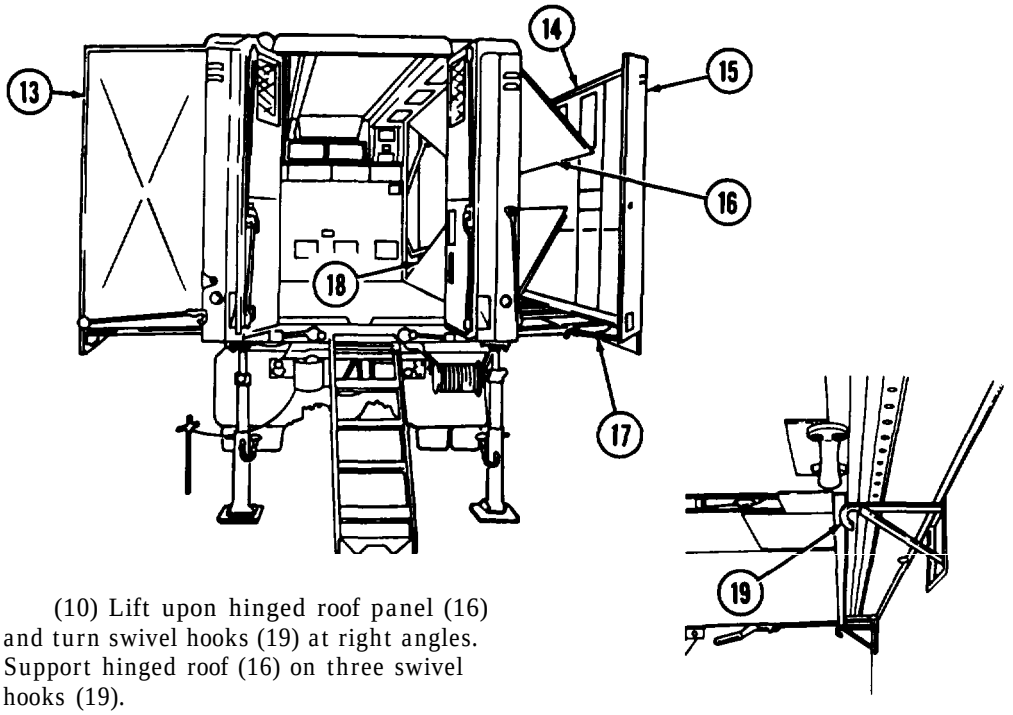


(10) Lift upon hinged roof panel (16) and turn swivel hooks (19) at right angles. Support hinged roof (16) on three swivel hooks (19).

TA 094391

(11) Slide end panel bolt (6) into corner post guide (8).

(12) Crank both sides in with ratchet wrench until toggle clamps (1) on van roof can be attached to swivel hooks (2). Left ratchet (13) is turned clockwise to retract left side of van. Right ratchet (14) is turned counterclockwise to retract right side of van.

(13) Pull side panel (4) straight by partially closing clamps (1). While doing this, push up on hinged roof (3) and out on end panels (5) to ensure seal alinement.

(14) Stand on hinged floor panel (7) to relieve any binding.

(15) Apply force to left and right ratchet cranking mechanisms (13) and (14) to ensure a tight seal.

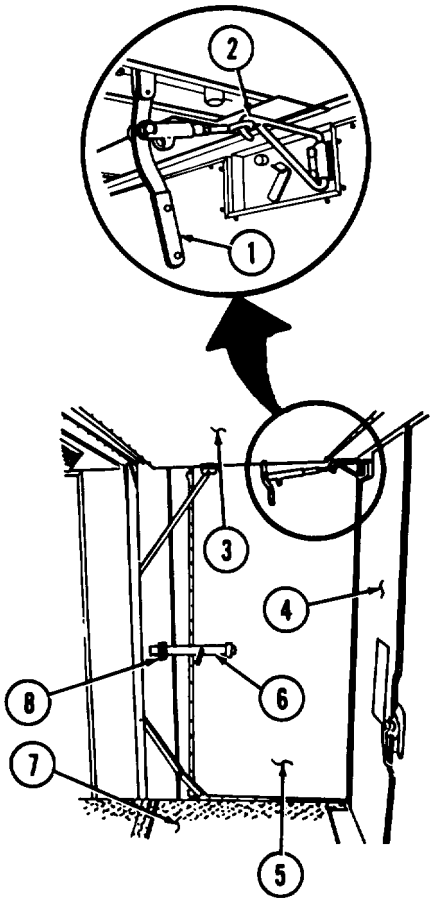


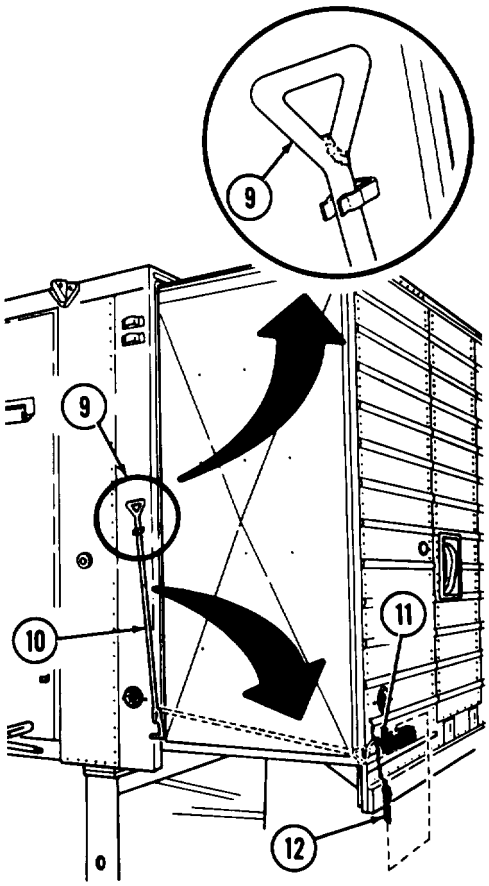


(16) Close three toggle clamps (1) on each side, closing center clamp first.

(17) Remove side lockrod (10) from retaining clip. Swing rod (10) down and engage end of rod (9) with lock handle assembly (11). Push assembly closed and secure with chained pin (12). Repeat procedure at all four van corners.

**NOTE**

Make sure sliding end panel bolts (6) are fully extended into corner post guides (8).

TA 094392

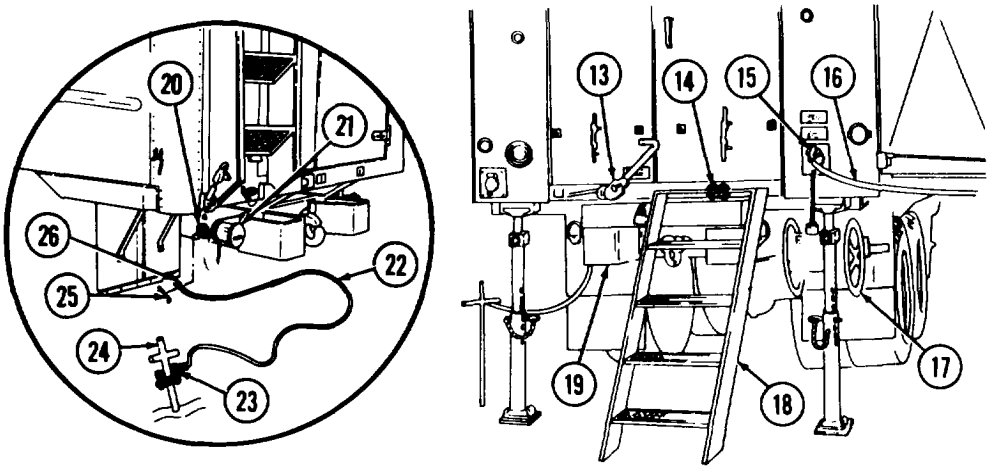


(18) Complete van setup as applicable:

(a) Mount ladders (18) to rear and/or side doors.

(b) Remove ground spike (24) from storage box (19).

**WARNING**

Make sure spike cable ring terminal makes good contact with bare metal. If necessary, scrape contact area clean of dirt, paint, and rust. Failure to do this will result in electrical damage, injury, or death.

(c) Remove wing nut (25) and connect spike cable ring terminal (26) to chassis (20) behind left-rear stoplight (21). Connect spike cable terminal clamps (23) to ground spike (24) and slide up to T-handle.

**WARNING**

Ground spike must be driven into ground 18 to 24 inches (46 to 61 centimeters) and spike cable (22) connected to the chassis before power can be taken from outside source. Failure to do this will result in electrical damage, injury, or death.

(d) Drive ground spike (24) 18 to 24 inches (46 to 61 centimeters) into ground.

(e) Remove power cable (16) from power cable reel (17) using ratchet wrench.

**NOTE**

It may be necessary to use electric auxiliary cable to connect to auxiliary power source.

(f) Connect power cable (16) to appropriate auxiliary power source.

(g) Connect other end of power cable (16) to van power entrance receptacle (15).

TA 094393

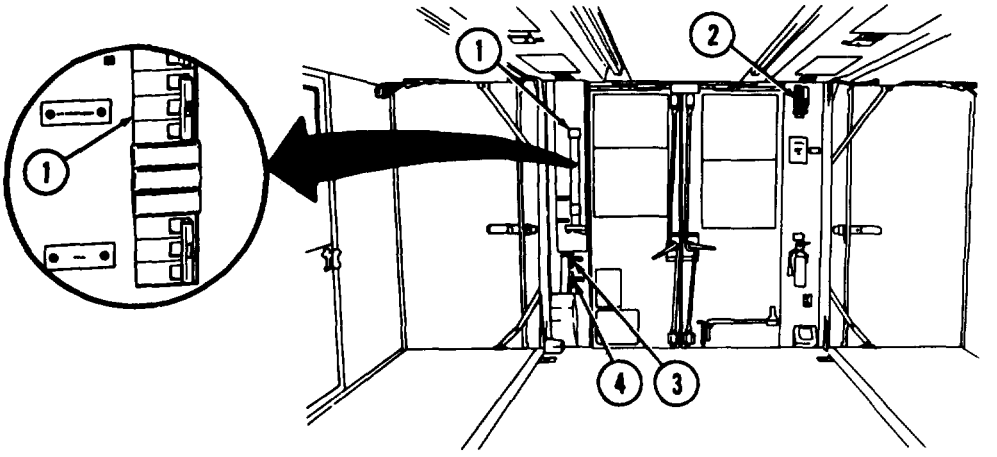


**f. Operating Van Electrical System.**

(1) Turn on main switch to connect switch box (1) to current from outside power source.

(2) Turn on ceiling light switch (switch 14).

(3) Turn on receptacle switches (switches 1, 3, 4, 6, 7, 9, 10, 12, and 13).

(4) Turn on switch 5 if left heater (5) is to be used. Turn on switch 8 if right heater (7) is to be used. Refer to g. below for left and right heater operating instruction.

(5) Turn on air conditioner switch if air conditioning unit (6) is to be used. Refer to h. below for air conditioner operating instructions.

(6) Turn on switch 2 if blackout switch (3) is to be used. Refer to i. below for blackout operating instructions.

(7) Turn on emergency light switch (4) if outside power source fails.

**g. Operating Van Heaters.**

**WARNING**

- Ground spike must be driven into ground 18 to 24 inches (46 to 61 centimeters), and spike cable connected to the chassis before power can be taken from outside source. Failure to do this will result in electrical damage. injury. or death.
- Make sure spike cable ring makes good contact with bare metal. If necessary, scrape area clean of dirt, paint, and rust. Failure to do this can result in electrical damage. injury, or death.

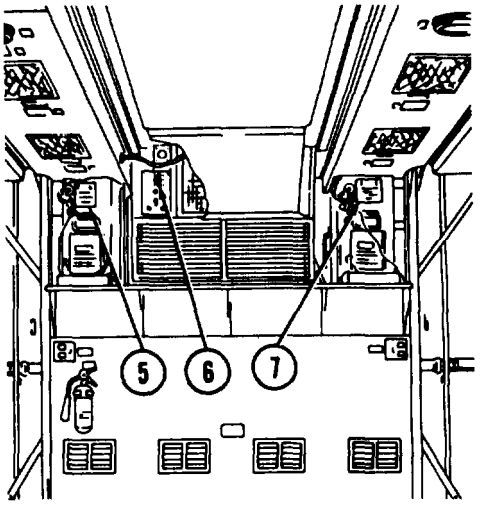


TA 094394

(1) Turn on main circuit breaker switches (switches 22, 23, and 24) in circuit breaker switch box (1).

(2) Turn on left heater switch (switch 5) and/or right heater switch (switch 8) in circuit breaker switch box (1).

(3) Set heater thermostat (2) to desired temperature.

(4) Open heater fuel shutoff valve.

(5) Set heater switch (8) to HEATER (for heated air) or FAN (for unheated air) as desired. White indicator light (9) comes on when heater is working properly.

(6) Set louver operating handles (10) to control mix of outside air with recirculated air.

(a) On left side heater, pull louver handle (10) in to recirculate air, out to admit outside air.

(b) On right side heater, pull louver handle (10) in to recirculate air, out to admit outside air.

(7) Open heat registers (11) below heaters.

(8) To stop heaters, turn off heater control switch (8).

**CAUTION**

Do not turn off heater circuit breaker switches (switches 5 and 8) until white indicator light (9) goes off. Damage to heater will result.

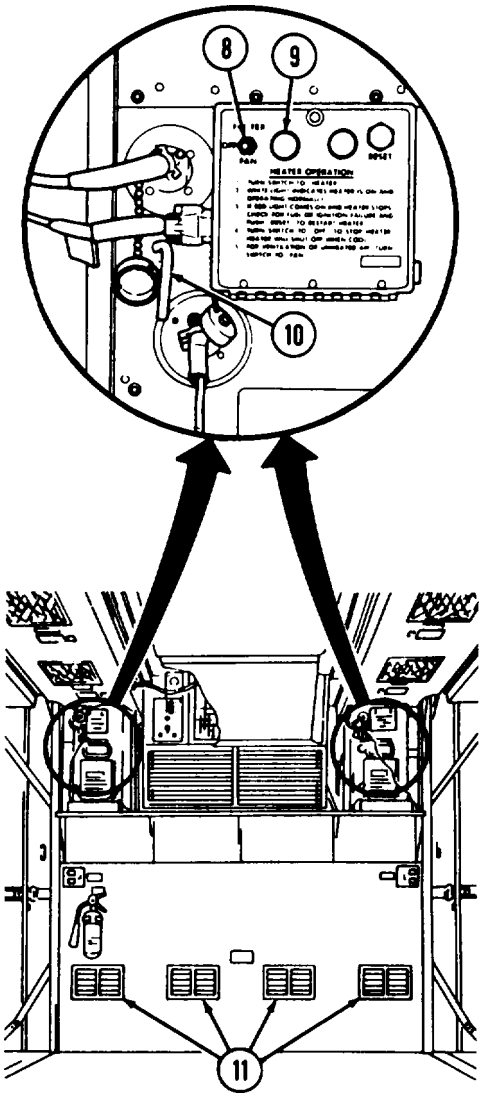


TA 094395

**h. Operating Van Air Conditioner.**

(1) Push bonnet door control rod (9) forward to open bonnet door (11).

(2) Turn on main circuit breaker switch in circuit breaker switch box (1).

(3) Turn on air conditioner switch in circuit breaker switch box (1).

(4) Turn on power input switch (3) and compressor circuit breaker (4).

(5) Set air conditioner control (5) to COOL for cold air or VENT for ventilation of outside air into van.

(6) Turn compressor switch (6) to HIGH when starting air conditioning unit. Turn switch to LOW after desired temperature is obtained.

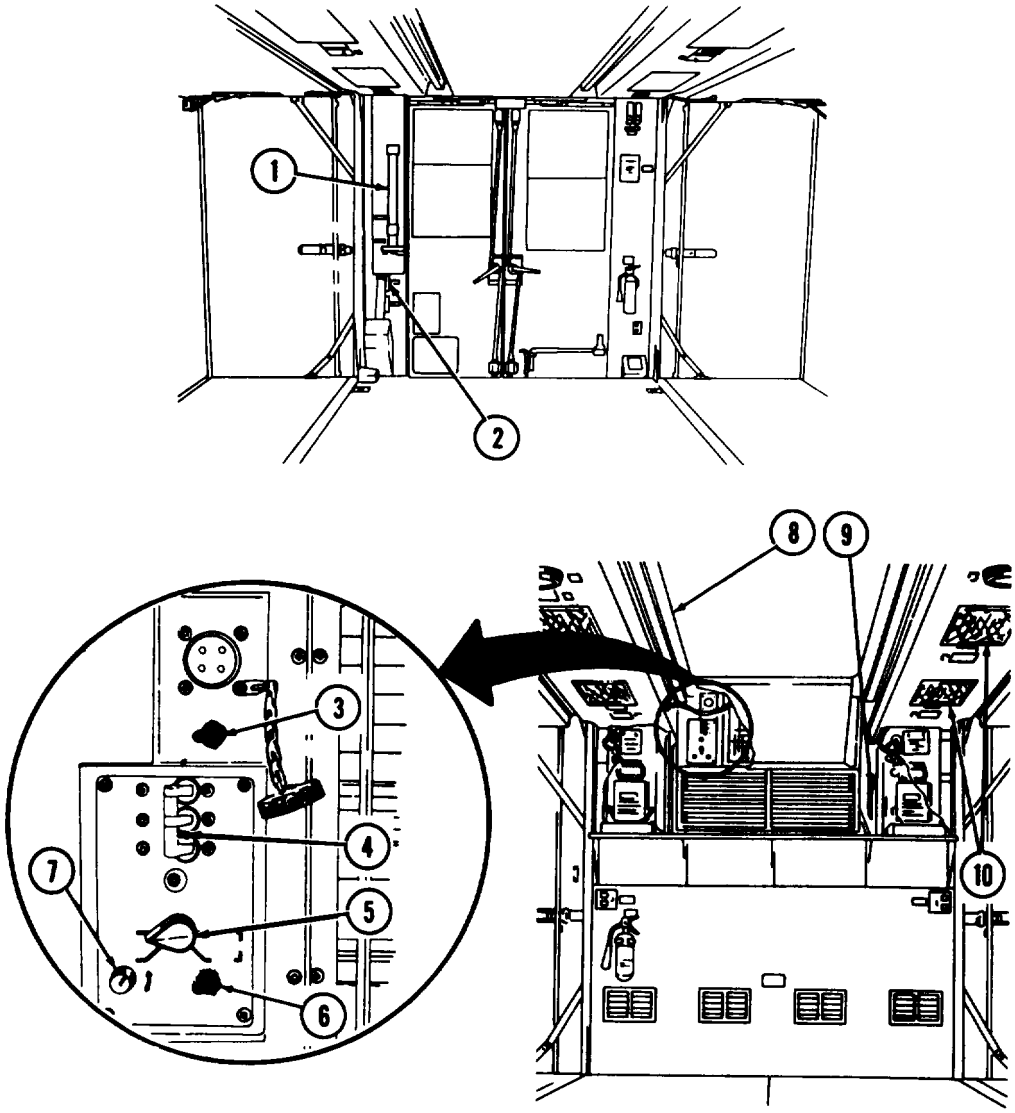


TA 094396

(7) Adjust temperature selector (7). Cooler temperatures are obtained when temperature selector (7) is turned counterclockwise.

(8) Open air conditioner vents (8).

(9) To shut off air conditioners:

(a) Turn air conditioner control (5) to VENT.

(b) Turn compressor circuit breaker (4) to OFF.

(c) Turn power input switch (3) to OFF.

(d) Turn off air conditioner switch in circuit breaker switch box (1).

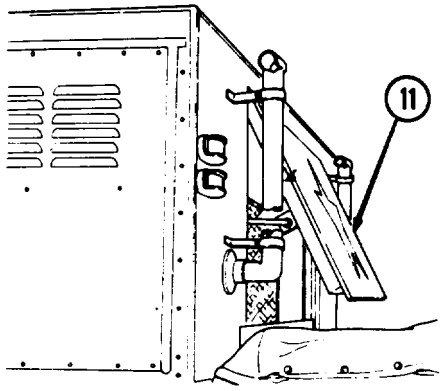


(e) Pull bonnet door control rod (9) back to close bonnet door (11).

**i. Blackout Operations.**

(1) Push up blackout panels (12) on van sides and rear doors to block in all interior light.

(2) Turn on blackout circuit switch (switch 2) in circuit breaker box (1).

(3) Turn on main circuit breaker switch in circuit breaker box (1).

(4) Turn on blackout switch (2). Ceiling lights (10) will cut off automatically when van door is opened.

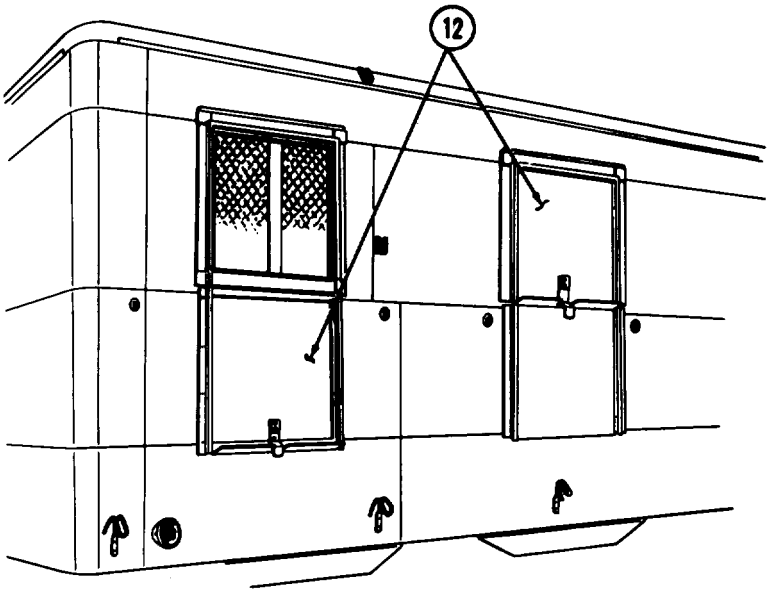


TA 094397

(5) Turn overhead receptacle switches (3) to ON position.

**NOTE**

Leave switches (3) servicing machines that must operate without interruption during blackout conditions in OFF positions. Lights to operate these machines should be plugged into a separate overhead receptacle with blackout switch in ON position.

(6) After blackout operation:

(a) Turn all overhead receptacle blackout switches to OFF.

(b) Turn off main blackout switch (2).

(c) Turn off blackout circuit breaker switch (switch 2) in circuit breaker box (1).

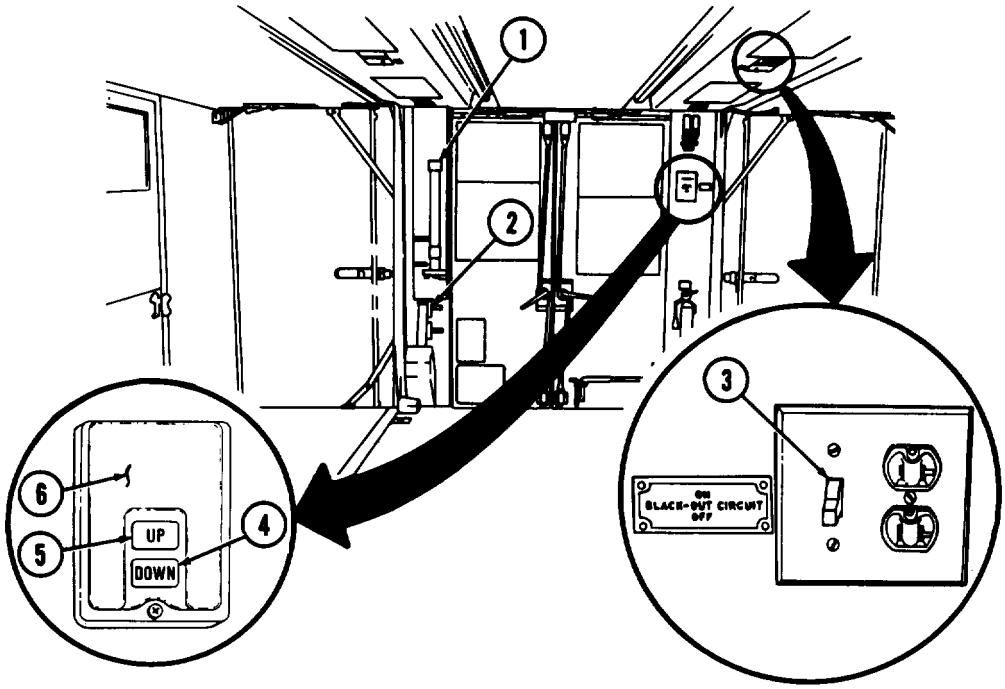


**j. Operating Power Liftgate (M820A2 Only).**

(1) Use inside van switch (6) to operate liftgate when vehicle is connected to an external power source.

**CAUTION**

Do not use inside van switch when power takeoff is engaged. Damage to liftgate will result.

(a) Upper button (5) elevates hydraulic liftgate.

(b) Lower button (4) lowers hydraulic liftgate.

(2) Use power liftgate operation procedures outlined in d. above when external power is not available.

TA 094398

**CAUTION**

- Do not elevate liftgate to CLOSE position when rear doors are open. Damage to rear doors will result.
- Do not carry load on liftgate when vehicle is in motion. Do not overload liftgate. Distribute load evenly. Maximum load is 3,000 pounds (1,362 kilograms). Damage to liftgate will result.

**k. Retracting Van Body.**

**(1)** Turn off van machines.

**(2)** Remove and stow all gear and equipment from expanded sections of van floor.

**(3)** Close and secure all windows, screens, and side doors.

**(4)** Turn off all switches (switches 1 through 15, air conditioner, and main switch) in circuit breaker box (1).

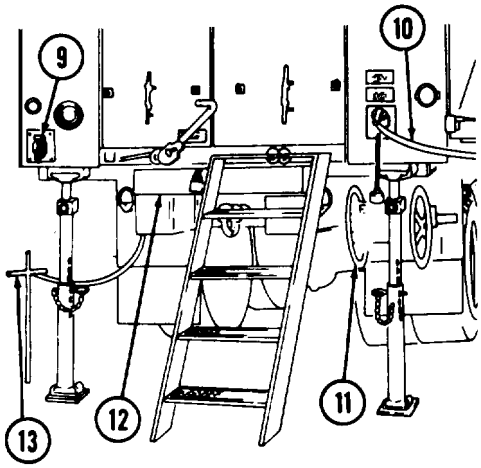


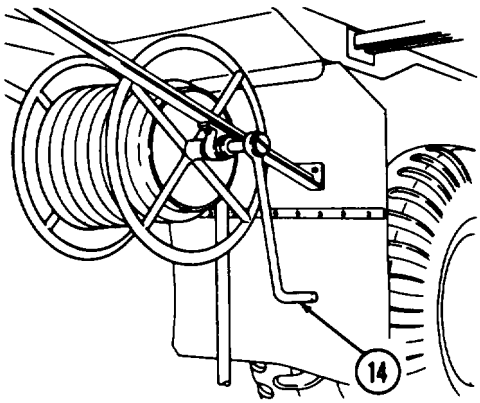


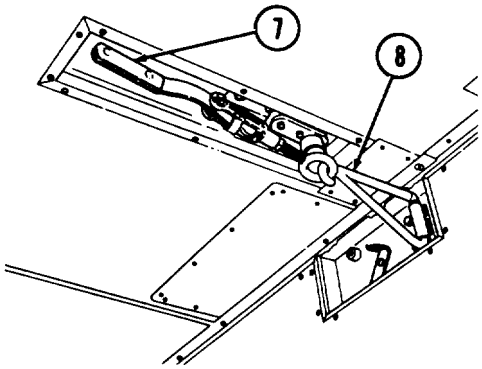


**(5)** Release and unhook six toggle clamps (7). Do not place swivel hooks (8) in stowed position.

**(6)** Disconnect field telephone lead-in (9), if used.

**(7)** Disconnect power cable (10) from van auxiliary power entrance receptacle and auxiliary power source. Start with van receptacle cable end and rewind on power cable reel (11) using ratchet wrench (14). Cover with canvas cover.

**(8)** Remove ground spike end cable (13). Stow in storage box (12).

TA 094399

**(9)** Disengage side lockrods (3) at all four corners from lock handle assemblies (5) and place rods (3) in retaining clips (4).

**(10)** Make sure locking plunger is unlocked to release left ratchet (2).

**(11)** Turn left ratchet (2) counterclockwise with ratchet wrench (6) to expand left side panel (12). Turn right ratchet clockwise to expand right side panel (16). Crank both sides until fully expanded.

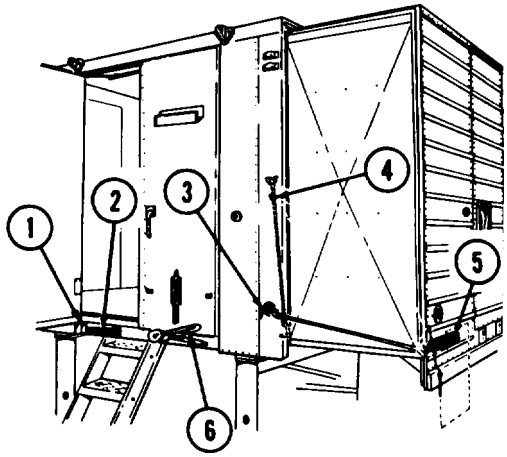


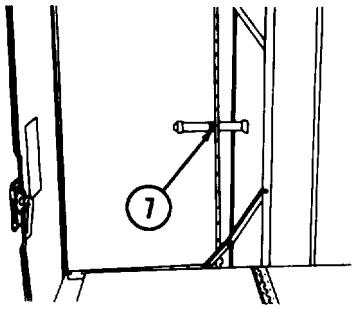


**(12)** Retract four end sliding bolts (7).

**(13)** Push up on hinged roof (8) to free end panels (9). Push out on end panels (9) and hold panels open with holding rod (10).

**(14)** Push upon hinged roof (8) and swing swivel hooks (15) into stored position.

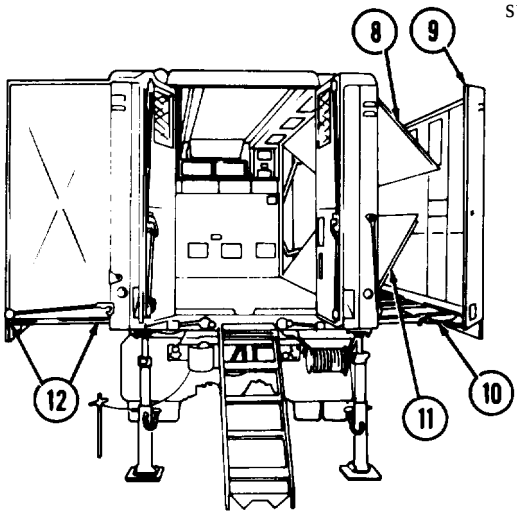


**NOTE**

Make sure floor is clear of all materiel and personnel.

(15) Engage eye of each toggle clamp (13) with anchor post (14) in stored position and close clamp (13).

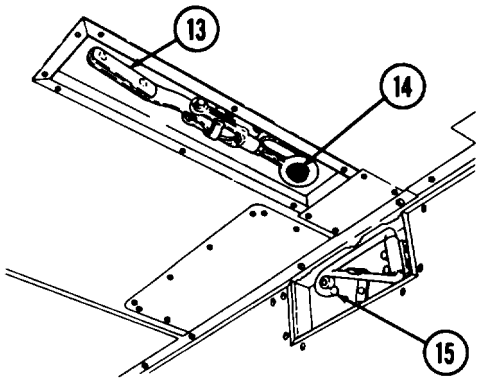


TA 094400

(16) From outside van, push upward and inward to fully close hinged floor (11) and roof panels (8). Turn lock handle (17) clockwise to lock floor and roof panels in closed position.

(17) Remove holding rods (10) from end panels (9) and insert each rod into retaining clips on beam.

(18) Close end panels (9) at all corners.

(19) Turn left ratchet (2) clockwise with ratchet wrench (6) to retract right side panel (16). Crank both sides until fully retracted. Push locking plunger (1) upward to lock ratchet (2).

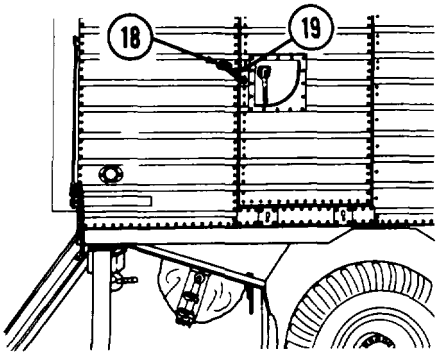


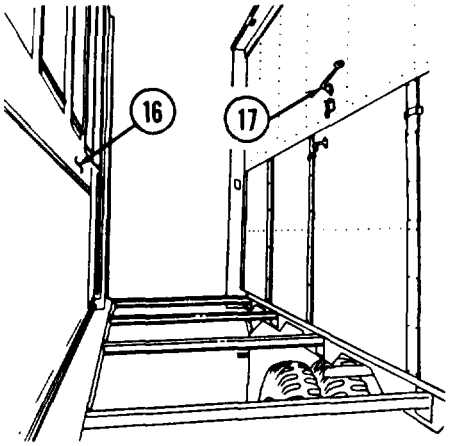


(20) Turn four side locks (18) clockwise with side panel lock wrench (19).

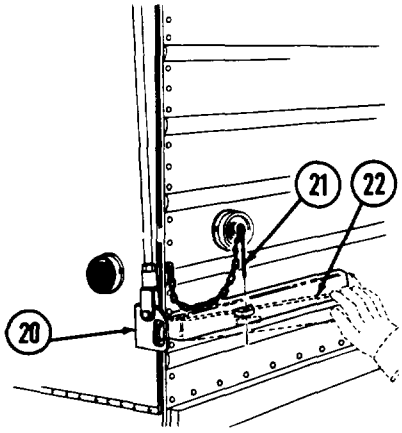


(21) Insert end of lock handle assembly (22) into lockrod brace (20). Close lock handle assembly (22) and secure in place with chained pin (21).

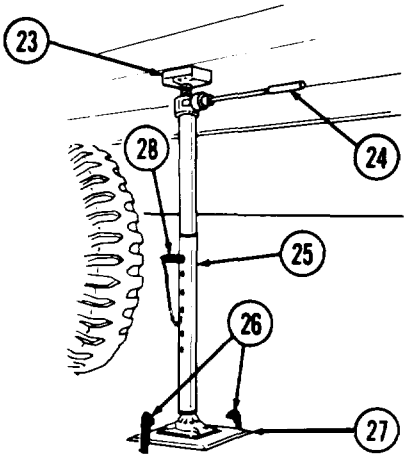


(22) Remove two jack spikes (26) from footpad (27) and install jack handle (24) in leveling jack (25). Rotate jack handle (24) clockwise until footpad (27) clears ground.

(23) Remove leveling jack (25) from van body bracket (23) and detach footpad (27) from jack.

(24) Remove leveling jack chained pin (28) and slide telescoping jack tube into main jack tube. Reinsert chained pin.

(25) Repeat steps 22 through 24 with remaining van body leveling jacks.

(26) Stow leveling jacks (25), footpads (27), and jack spikes (26) in compartment at rear of van body.

TA 094401

(27) Stow all tools and equipment used during van operation.

(28) Close and secure rear doors.

(29) On models without liftgate, install ladders (1) to rear doors and secure for travel with toggle clamps (2).

(30) On models with liftgate, elevate and close liftgate (3), then install ladders (1). If necessary, refer to d. above for liftgate operating instructions using exterior controls (5).

(31) Secure lower end of ladders (1) to liftgate (3) with eyebolts (4).

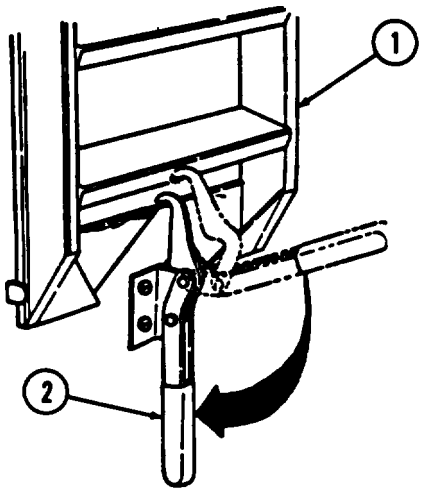


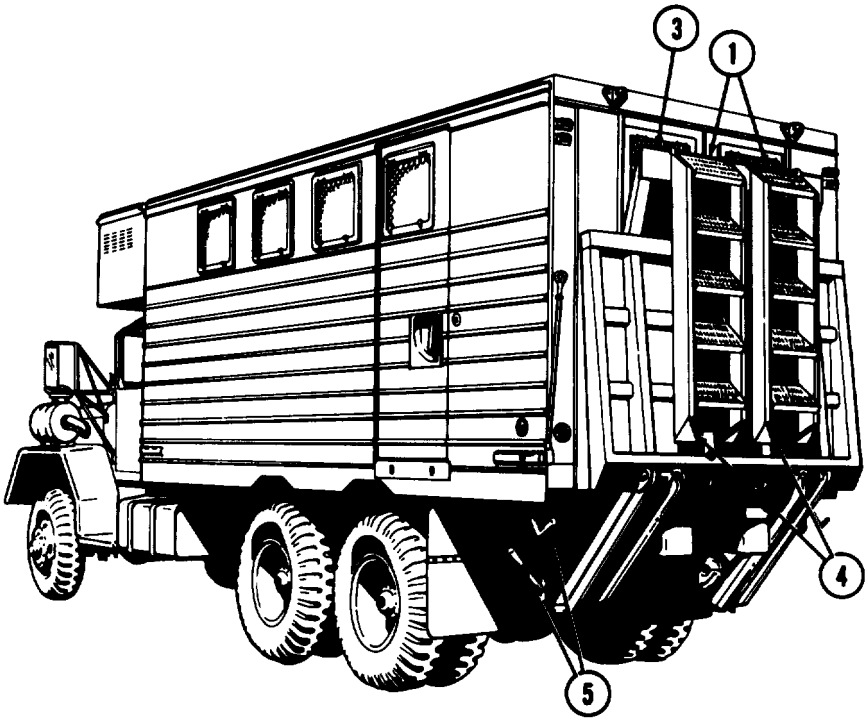


TA 094402

## 2-30. OPERATION OF BRIDGE TRANSPORTING TRUCK

**a. General.** The bridge transporting truck M821 is a stake body type truck designed to carry bridge building equipment. The truck stake racks can be removed when extra wide loads are to be carried. To assist with manual loading or unloading, the M821 truck has a roller at the rear of the truck body and a snatch block at the front of the truck body. The M821 also has two hand-operated winches on the left side and two on the rear end to secure loads to the truck.

**b. Preparation for Loading.**

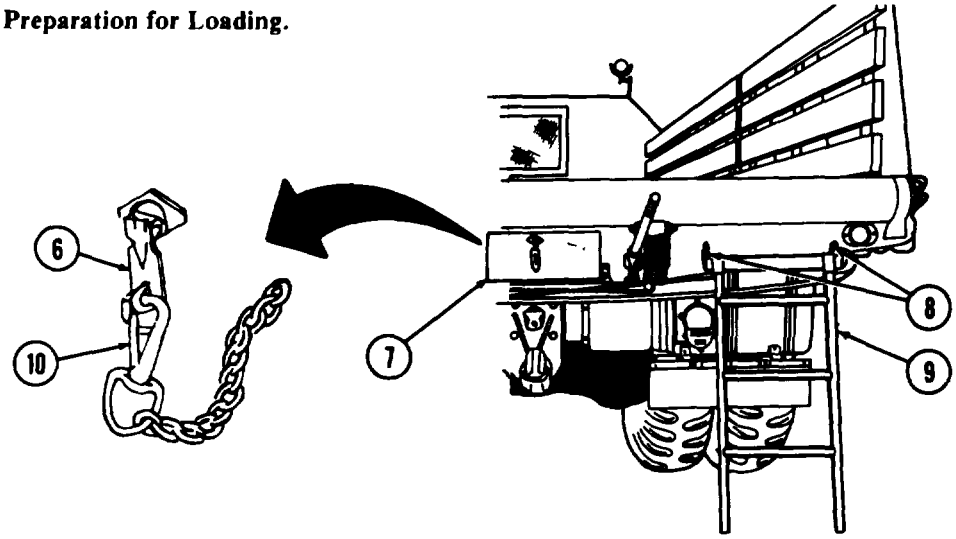


**(1) To install ladders:**

(a) Remove snap hook (10), lift latch (6), and turn left 90 degrees.

(b) Open door (7) and remove two ladders (9).

(c) Position ladders (9) on right and left rear hangers (8).

(d) Close and secure stowage compartment door (7).

**NOTE**

- Refer to the applicable technical manual for the bridge to be loaded, for information on parts to be loaded, order of loading, and placing of parts on the truck.
- If an oversize load is to be carried, or if the truck side racks get in the way when loading, remove as many side racks as necessary.

TA 094403

**(2) To remove side rack sections:**

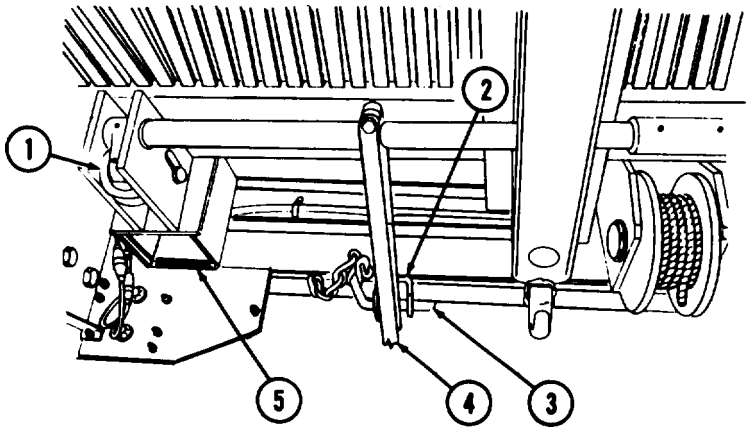


(a) Remove locking pin (3) and push handle (4) down to pull latch (1) from side rack posts (5).

(b) Remove side rack from vehlicle.

(c) Aline holes in handle (4) and bracket (2), and install locking pin (3).

**c. Loading the Truck Using Crane.**

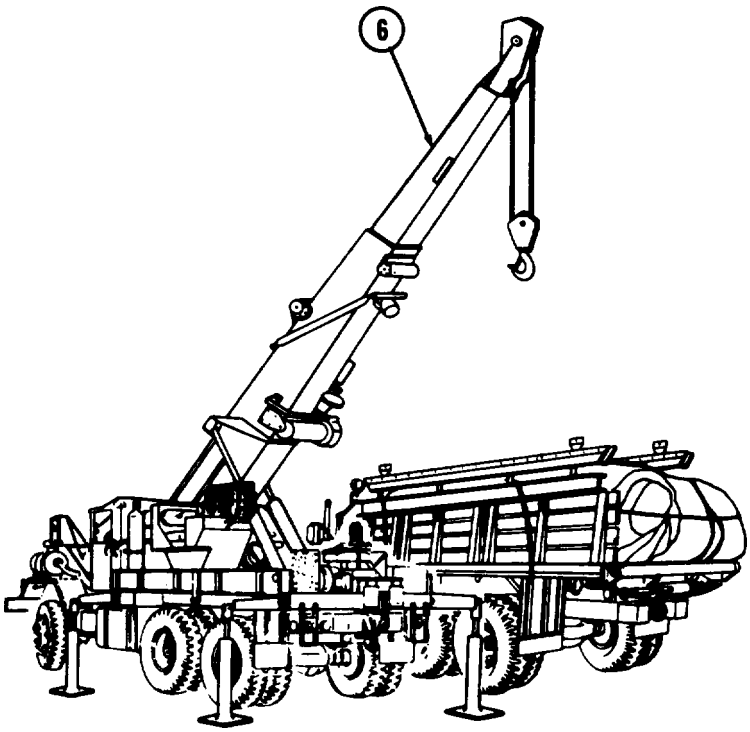


TA 094404

(1) For class 60 bridge sections: a crane (6) must be used to load the truck (refer to the applicable crane technical manual for crane operating procedures).

(2) For M4T6 float bridge: use a crane (6) to load the truck if available (refer to the applicable crane technical manual for crane operating procedures).

**d. Loading the Truck Manually.**

**NOTE**

- Recommended number of personnel for this task is twelve.
- A second truck with winch is required.

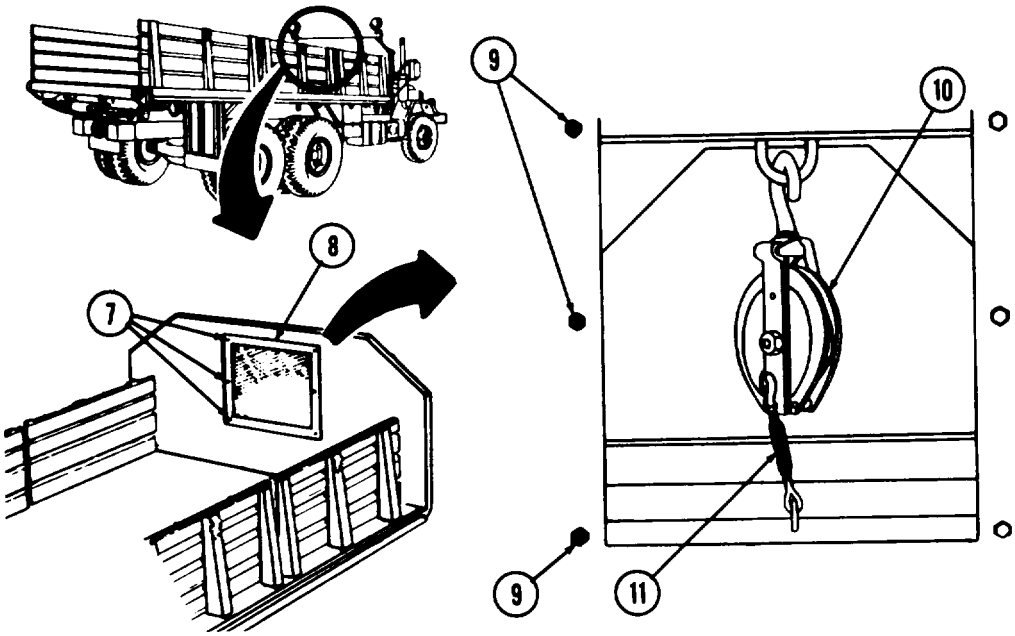


(1) Remove six capscrews (7) from grill (8) and remove grill (8) from truck cargo body.

(2) Stow capscrews (7) in cargo body holes (9).

(3) Loosen and remove turnbuckle (11) from snatch block (10).

**NOTE**

When a second truck with a winch is used to assist in loading of the bridge transporting truck, it should be parked so as not to interfere with loading. The winch should be in line with the snatch block (10) and winch cable should be clear.

TA 094405

(4) Park second truck with winch (1) in position.
(5) Remove forward side rack (3).

**WARNING**

Always wear hand protection when handling winch cable. Never let cable run through bare hands. Broken and frayed wires can cause injury.

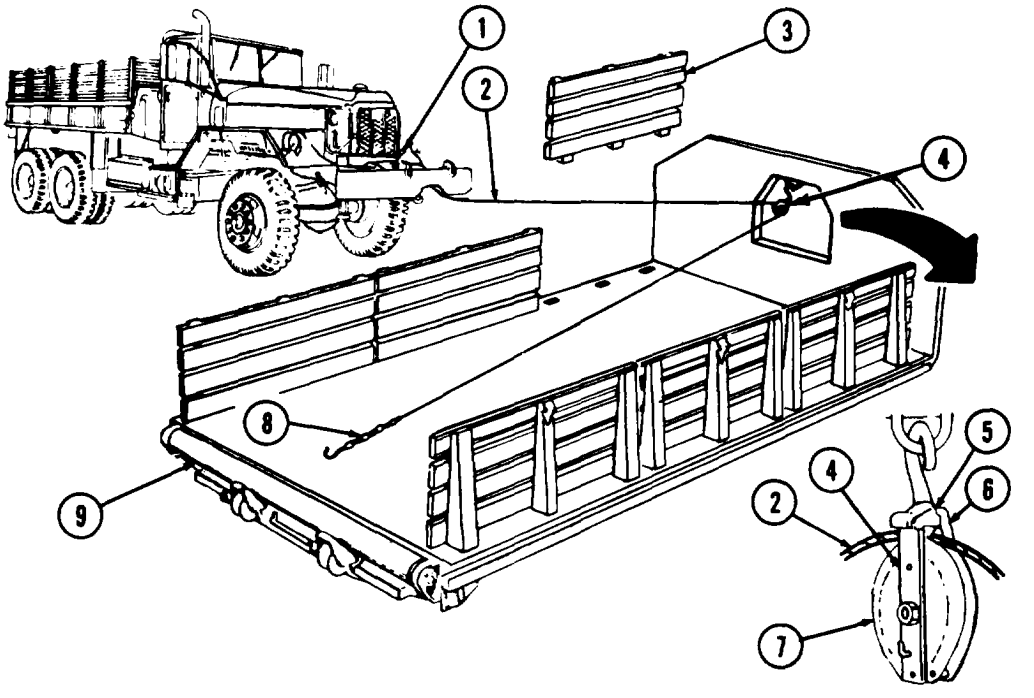


**(7)** Pull latch (5) down, swing bracket (6) to open position, and place winch cable (2) on sheave (7).

**(8)** Swing bracket (6) to closed position and pull latch (5) into locked position.

**WARNING**

- Do not let personnel stand or walk under or near loads and winch cables being used to load and unload truck. A snapped cable or shifting load can cause serious injury.
- Do not lift or pull more than the rating of the winch being used. to avoid damage to equipment or injury to personnel.

**CAUTION**

Position load in truck body so that weight is spread evenly over the whole body so as not to unbalance the truck.

TA 094406

(9) Pull cable chain (8) to material to be loaded (refer to paragraph 2-22) and hook onto cable or chain of load. Slowly take up cable (2) slack,

(10) Using winch (1), slowly pull material toward vehicle.

(11) Use personnel as needed to lift material to rear roller (9) and push onto end of vehicle.

(12) Remove winch cable hook from load chain, and remove cable (2) from snatch block (4).

(13) Rewind winch cable (2) (refer to paragraph 2-22).

(14) Connect turnbuckle (13) to snatch block (7) and secure by tightening.

(15) Aline grill (11) with cargo body holes (12) and secure with six capscrews (10).

(16) Reinstall forward side rack(s) (3) and secure in place.

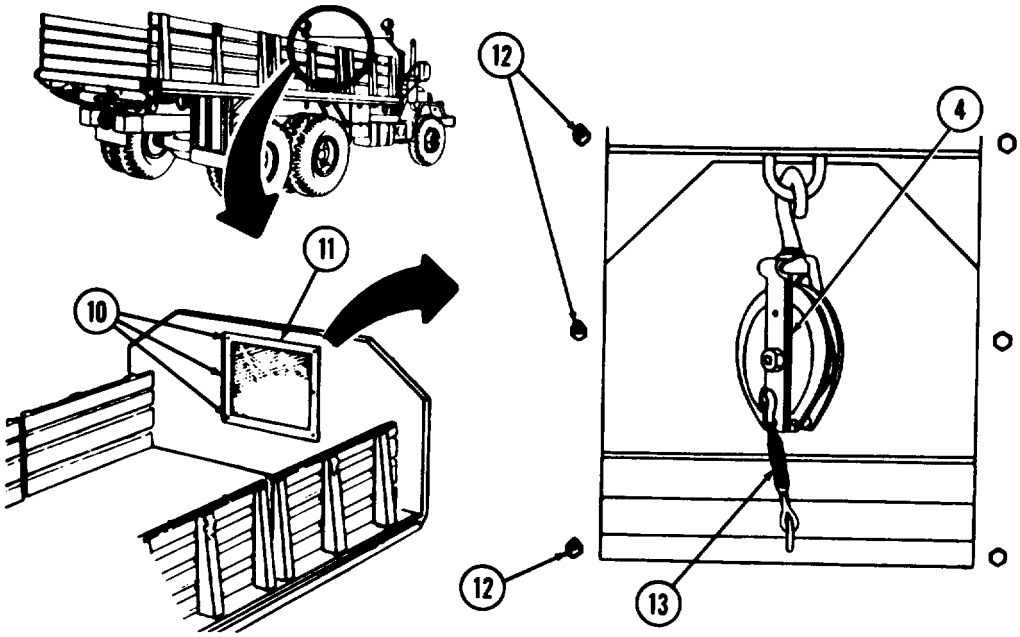


TA 094407

**e. Tie Down of Loaded Material.**

**NOTE**

Two personnel are required for this task.

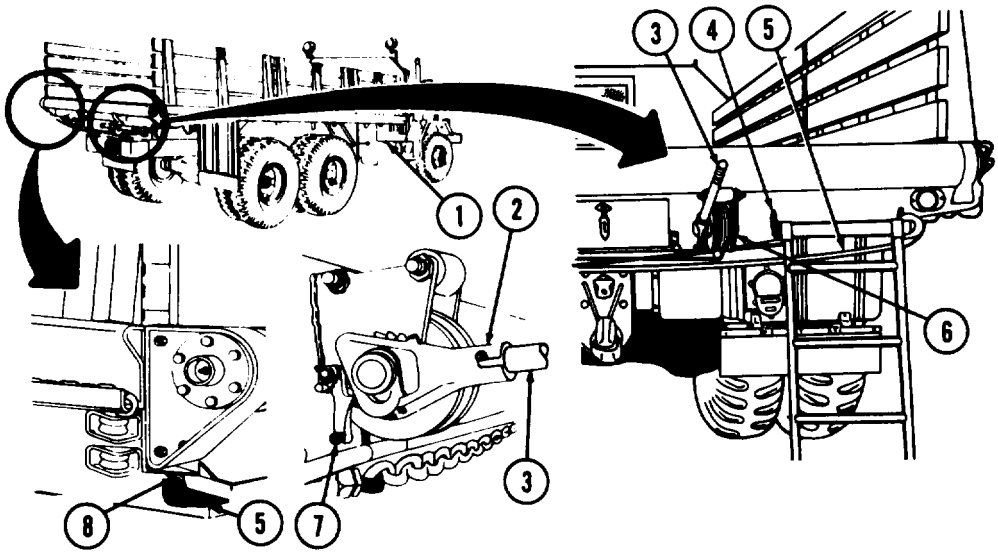


(1) Remove winch handle (3) from stowage compartment (1) and install in rear ratchet lever (2).

(2) Push down on winch handle (3), push spring-loaded pawl (7) forward, and hold it there.

**WARNING**

Always wear hand protection when handling winch cable. Never let cable run through bare hands. Broken and frayed wires can cause injury.

(3) Unhook winch cable (5) from right ladder bracket (4) and left lashing hook (8). Pull length of cable (5) from drum (6) needed to tie down load. Release spring-loaded pawl (7).

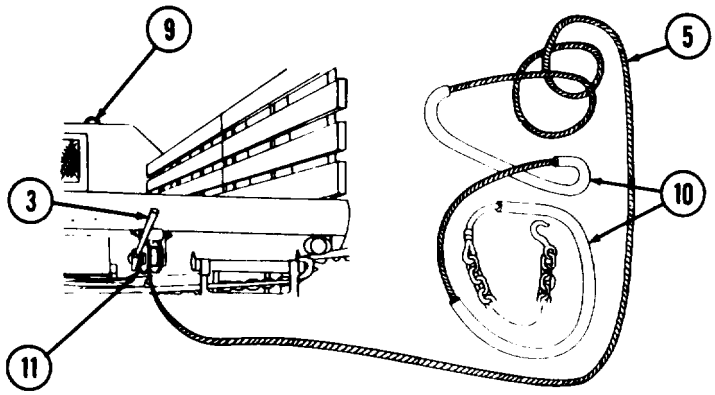


TA 094408

(4) Secure cable (5) from right rear winch (11) to lashdown loop (9). Slide rubber protectors (10) into position on cable (5) to protect load and cable from damage.

(5) Move winch cable handle (3) up and down to take up slack in cable (5).

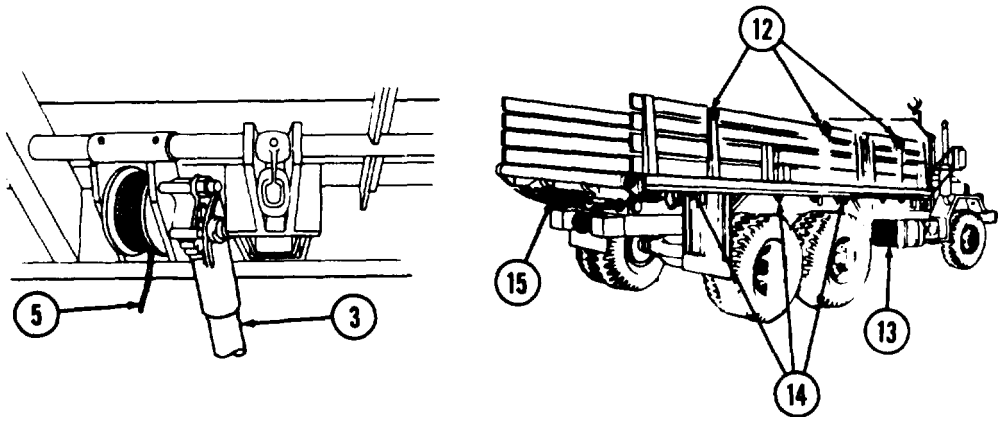


(6) Repeat steps 4 and 5 for left rear, forward, and side rear winches.

(7) Secure cable (5) to lashing rings(12) and/or lashing hooks ( 14), and tighten Repeat this step for opposite side hand winch.

(8) Remove handle (3) and stow in stowage compartment (13).

(9) Remove ladders (4) and stow in stowage compartment (15).

**f. Preparation for Unloading.**

**NOTE**

The two left side winches and the two rear winches have the same operating procedures.

(1) Place ladders on left and right rear brackets (4).

TA 094410

(2) Move spring-loaded pawl (1) forward and pull out 3 or 4 feet (0.915 or 1.220 meters) of slack on cable (2).

**NOTE**

Release pawl (1) by pushing down and forward on ratchet lever (5).

**(3)** Repeat steps 1 and 2 for remaining three winches.

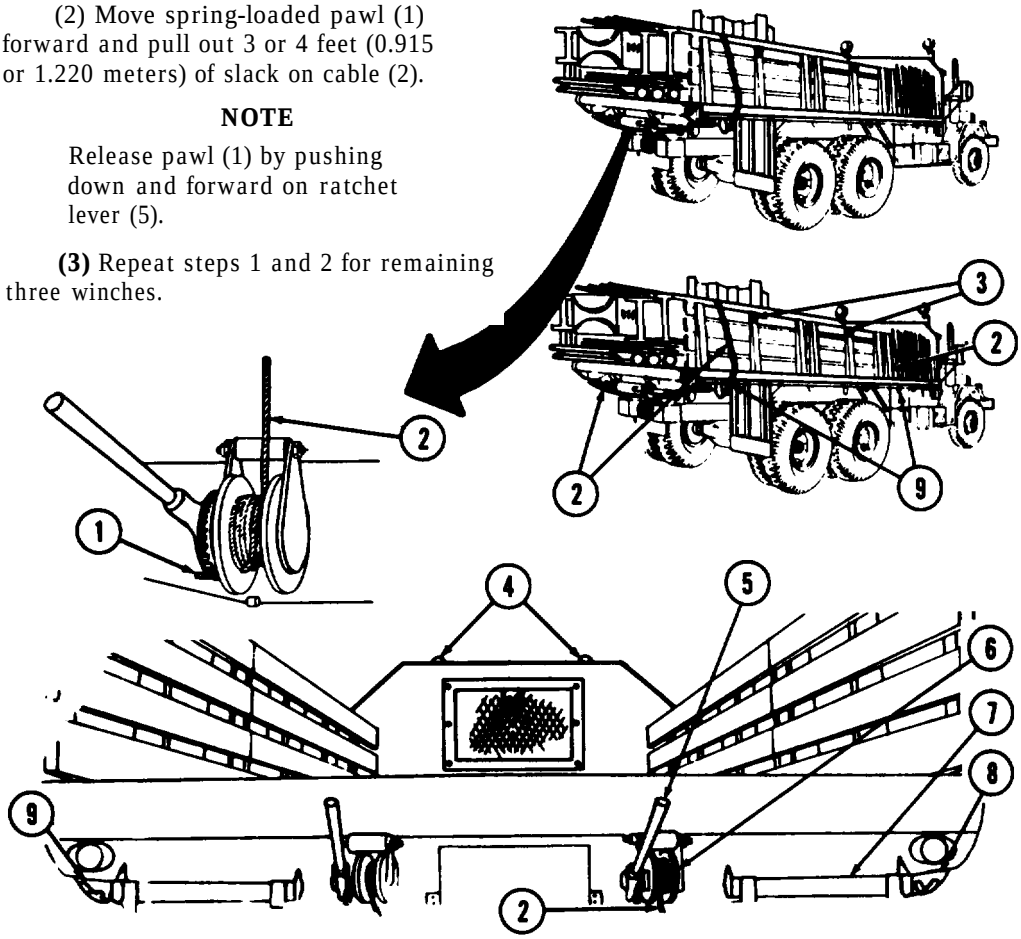


(4) Loosen and remove cables (2) from lashing hooks (10), lashing rings (3), and lashing rings (4).

(5) Prepare to wind cable (2) on winch (6).

**NOTE**

Retain tension on cable to prevent from becoming crossed on winch during winding.

(6) Continue winding until cable hook (13) is about 12 feet (3.660 meters) from winch (6).

(7) Place winch cable (2) around left rear lashing hook (9) and secure hook (8) to ladder bracket (7). Continue winding cable (2) until tight by operating winch ratchet lever (5).

(8) Repeat steps 4 through 7 for opposite rear winch.

TA 094411

(9) Repeat steps 5 and 6 for left side winches

(10) For left side forward winch cable (10): position cable (10) in side rail gutter (12) and secure hook (13) on end of gutter (12).

(11) For left side rear winch cable (11): position cable (10) inside rail gutter (12) and secure hook (13) on end of gutter (12).

(12) Continue winding cables (10) and (11) until tight by operating winch ratchet lever (5).

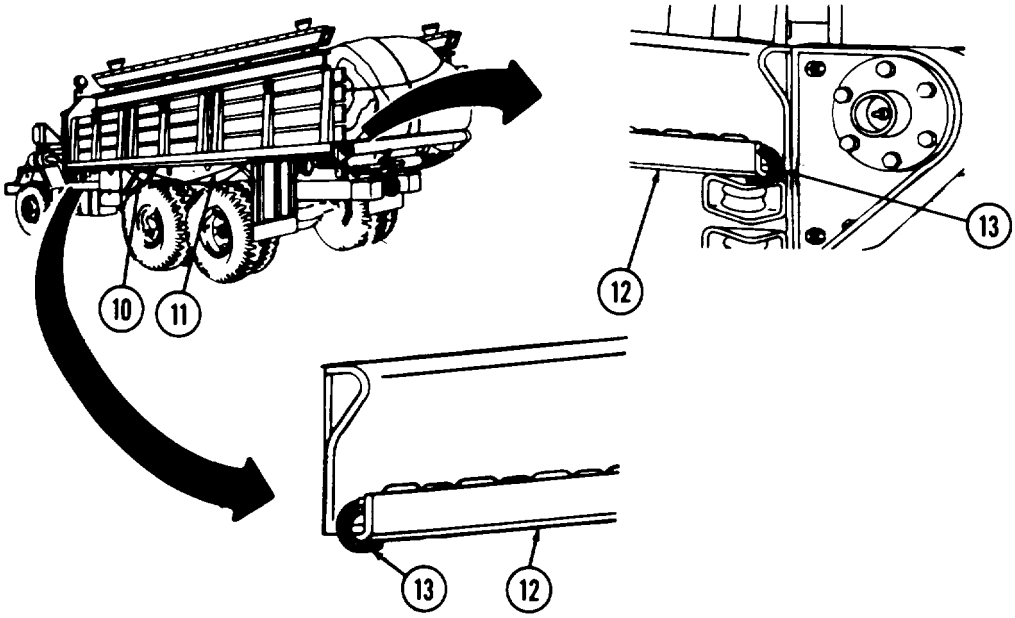


**g. Unloading Truck Using Crane.**

**NOTE**

- Do not exceed lifting capacity of crane.
- A crane must be used to unload class 60 bridge sections, If available, a crane should be used to unload the M4T6 float bridge.
- Four personnel required for this task.

(1) Use crane to unload heavy parts (refer to applicable TM for crane operating procedures).

TA 094412

(2) Use personnel, as necessary, to unload lighter parts manually.

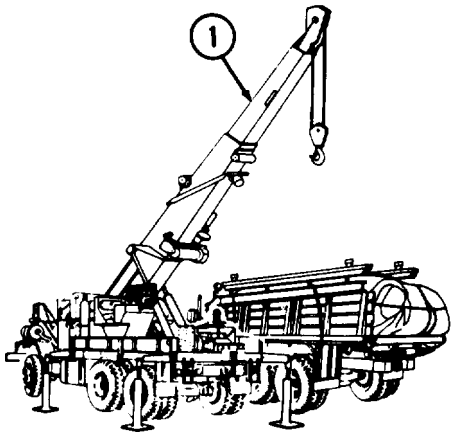


**h. Unloading Truck Manually.**

(1) Use crane (1) to unload class 60 bridge sections.

(2) Use personnel, as necessary, to unload other bridge material from vehicle manually.

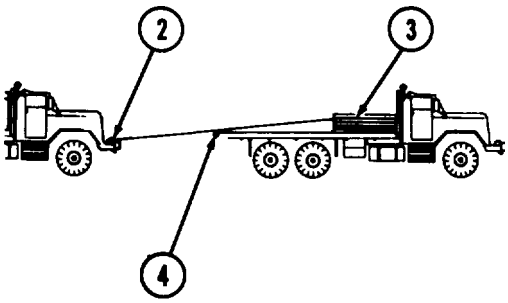


**NOTE**

A second vehicle with winch (2) can be used to pull heavy parts to end of bridge transporting truck (4). Load (3) is then removed manually (refer to paragraph 2-22 for winch operating procedures).

**i. After Unloading.**

(1) Install side racks (5) [refer to b.(2) above].

(2) Stow right and left ladders (6) [refer to b.(1) above].

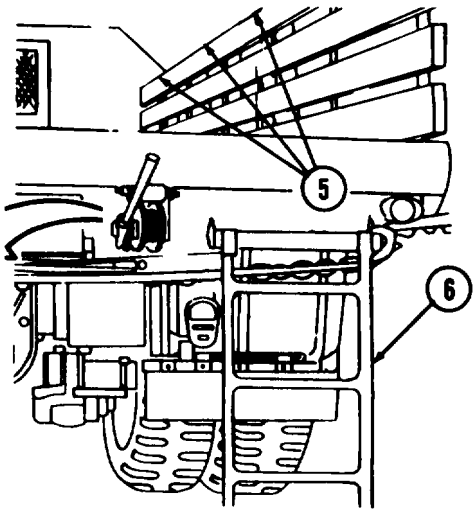


TA 094413

## Section IV. OPERATION UNDER UNUSUAL CONDITIONS

### 2-31. SPECIAL INSTRUCTIONS

**a. General.** Special instructions for operating and maintaining vehicles under unusual conditions are included in this section. Unusual conditions are extreme temperatures, humidity, and/or terrain. Special care with cleaning and lubrication must be taken in order to keep vehicles operational when operating under unusual conditions.

**b. Cleaning.** Refer to paragraph 2-8 for cleaning instructions and precautions.

**c. Lubrication.**

(1) Refer to LO 9-2320-260-12 for proper lubricating instructions.

(2) Service intervals in LO 9-2320-260-12 are for normal operating conditions. Reduce intervals to more frequent servicing when operating under unusual conditions.

**d. Driving Instructions.**

(1) FM 21-305 contains special driving instructions for operating wheeled vehicles.

(2) AR 600-55 contains instructions on driver selection, testing, and licensing.

(3) FM 9-207 contains instructions on vehicle operation in extreme cold of 0°F to -65° F (-17°C to -54°C) or below. Other documents with information on cold weather vehicle operation are:

(a) FM 31-70 Basic Cold Weather Manual.
(b) FM 31-71 Northern Operations.
(c) FM 90-6 (HTF) Mountain Operations.

**e. Special Purpose Kits.** Paragraphs describing special purpose kits for operation under unusual conditions are:

(1) Arctic winterization kit, paragraph 2-43.
(2) Deepwater fording kit, paragraph 2-40.
(3) Hot water personnel heater kit, paragraph 2-42.
(4) Windshield washer kit, paragraph 2-45.

**f. Reporting Material Failure.** Report chronic failure of vehicle, body equipment. or kits on Standard Form 368 (Quality Deficiency Report — Equipment Improvement Recommendations) as presented by DA Pam 738-750 and as stated in paragraph 1-4 of this manual.

TA 094414

## 2-32. OPERATING IN EXTREME COLD

**a. General.** The operator must always be alert to changes in weather. The operator must take care of assigned vehicle in order to prevent damage to vehicle because of sudden changes in weather. The operator should be cautious when starting or driving a vehicle that has not been operated for a long period. Lubricants may thicken and cause parts failure. Tires may freeze to the ground or may freeze flat on the bottom if under-inflated. The operator should be alert to such possibilities in order to prevent damage to the vehicle.

**b. Before Operation.**

**(1)** Perform all before operation services listed in table 2-2 preventive maintenance checks and services.

**(2)** Install warm batteries in vehicle before starting engine coolant heater.

**(3)** Refer to paragraph 2-13 for cold weather starting instructions.

**(4)** If vehicle is equipped with arctic winterization kit, refer to paragraph 2-43 for description and operating instructions.

**c. Starting Engine.**

**CAUTION**

Shut down engine coolant heater before starting vehicle engine.

(1) Start engine when engine coolant temperature reads 120°F (49°C) or higher as indicated by temperature gage (1). Refer to paragraph 2-13 for cold weather starting instructions if necessary.

(2) After engine starts, warm up engine until temperature gage (1) reads approximately 140°F (60°C).

**CAUTION**

Do not shut down engine if temperature gage reads less than 125°F (51.6°C). Run engine 800 to 1000 rpm as indicated by tachometer until coolant temperature is at least 125°F (51.6°C).

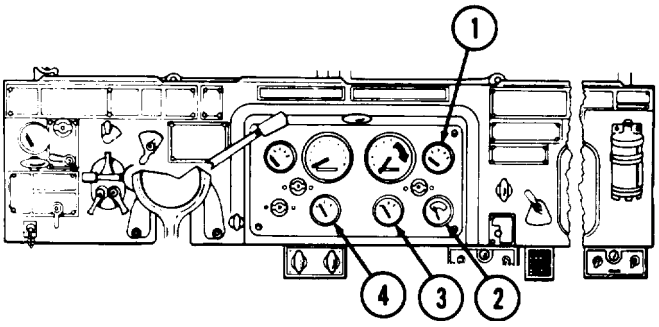


TA 094415

**(3)** Check instrument readings. If any reading is not normal, stop engine. Report condition(s) to organizational maintenance if operator troubleshooting cannot correct malfunction. Normal instrument readings are:

(a) Oil pressure gage (4) should register 15 psi (103 kPa) minimum with engine idling.

(b) Air pressure gage (3) should register 90 psi (621 kPa) minimum and 120 psi (827 kPa) maximum,

(c) Battery indicator gage (2) should register in green area.

(d) Coolant temperature gage (1) should register between 175° F to 195° F (79°C to 90°C).

**NOTE**

If vehicle has been exposed to extreme cold before starting, organizational maintenance personnel must warm gearcases, wheel hubs, and control linkage before operator places vehicle in motion.

**d. Driving Vehicle.**

(1) Remove chocks from vehicle wheels. Place transmission gearshift lever (5) in "1" (first) gear and transfer selector lever (6) in LOW. Drive slowly for about 100 yards. This should be enough time to warm up gearcases and tires to permit near normal operations.

(2) Constantly check instruments during engine operation. Oil pressure gage (4) may indicate sudden drop because engine oil consumption will be higher with oil, engine, sub-zero (OEA), than with oil, engine, heavy-duty (OE/HDO).

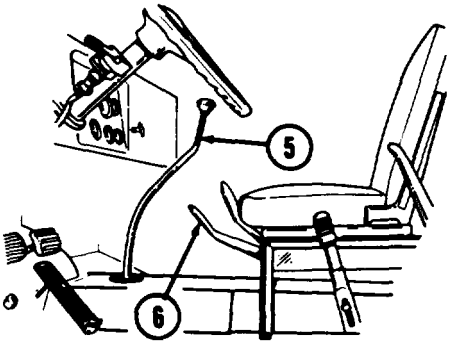


**e. Stopping or Parking.**

(1) Do not idle engine for more than 15 minutes.

(2) Park in a sheltered area out of the wind if possible. Park so vehicle does not face into the wind if sheltered area is not available.

TA 094416

**CAUTION**

Operator must take every precaution to prevent snow from blowing into vehicle engine when parked. Snow will melt and later form ice to jam engine controls.

(3) Park vehicle with wood planks, brush, mats, or canvas under the wheels if a long shutdown period in open area is anticipated.

**CAUTION**

Do not apply parking brake. Brakeshoes may freeze to the drum.

(4) Place transmission gearshift lever (1) and transfer selector lever (2) in "N" (neutral) position.

(5) Place chocks behind vehicle wheels if parking on a grade no matter how slight.

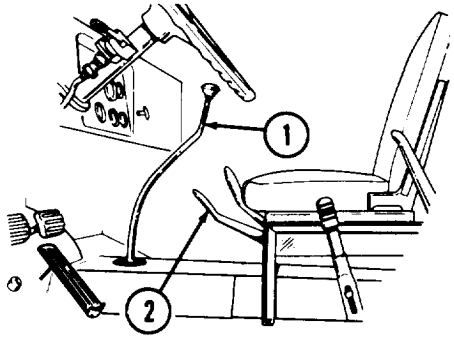


**f. After Operation.**

(1) Check fluid level of alcohol evaporator (4) at left front of engine compartment. Remove filler cap (3) and add alcohol, as required.

(2) Start engine coolant heater, if required (refer to paragraph 2-43).

(3) Perform after operation services in table 2-2.

**CAUTION**

If 1 pint (0.473 l) or more of fuel must be drained before fuel is clear, fuel tanks and fueling source should be inspected carefully. Report fuel contamination to organization maintenance.

(4) Fuel filter/water separator (5) must be drained to remove condensation in fuel system.

(a) Open fuel line inlet draincock (6) located near top of water separator (5).

(b) Open draincock (7) at bottom of fuel filter/water separator (5). Allow water. if present, to drain off into a container.

(c) If large amounts of water and/or impurities are visible, allow fuel to drain until fuel is clear.

(d) If little or no fuel passes out of the filter, report clogging of fuel filter to organizational maintenance.

(e) Close draincocks (6) and (7) before operating vehicle.

(f) Prime fuel system (refer to paragraph 3-11f.).

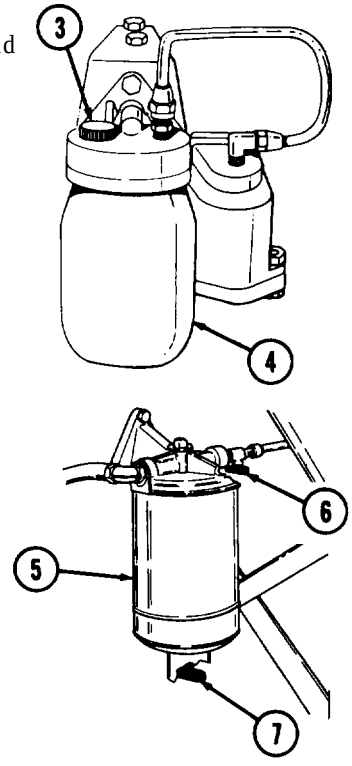


TA 094417

(5) Remove all ice and snow from underside of vehicle, air cleaner intake, and from fuel tank(s).

(6) Refill fuel tank(s) as soon as possible.

(7) At the end of daily operations remove batteries and store in a warm place if engine coolant heater will not be operated.

## 2-33. OPERATING IN SNOW

**a. General.**

(1) Refer to paragraph 2-13 for cold weather starting instructions.

(2) If vehicle is equipped with arctic winterization kit, refer to paragraph 2-43 for description and operating instructions.

**CAUTION**

Attempting operation with only one driving wheel equipped with tire chain may result in damage to tire and/or power train.

(3) Operating on snow or on ice requires the use of tire chains on driving wheels. Refer to FM 21-305 for installation of tire chains.

(4) Deflate tire pressure to 25 psi (172 kPa) if 4 tire chains are not available. Reinflate tires to normal operating pressures. Refer to table 1-4 or tire inflation data plate on instrument panel for normal tire pressure.

**b. Driving Vehicle.**

(1) Remove chocks (8) from vehicle wheels if used.

(2) Place transmission gearshift lever (1) in "1" (first) gear and transfer selector lever (2) in LOW. Begin movement by releasing clutch pedal (11) gradually, without causing the wheels to spin or engine to race.

(3) Skidding, loss of steering, and loss of traction are chief operating problems on snow-packed or icy roads. If rear end skidding occurs, instantly turn front wheels in direction of skid. Let up on accelerator pedal (9) but do not disengage clutch (11). Apply service brakes (10) gradually and intermittently to help recover from skid.

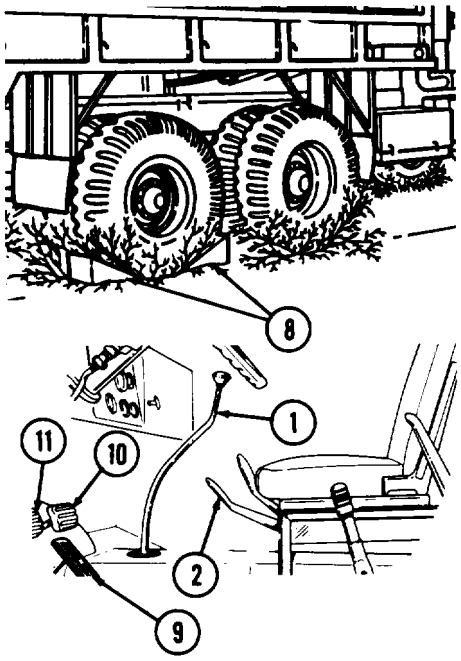


TA 094418

**c. After Operation.**

(1) Check fluid level of alcohol evaporator (2) at left front of engine compartment. Remove filler cap (1) and add alcohol, as required.

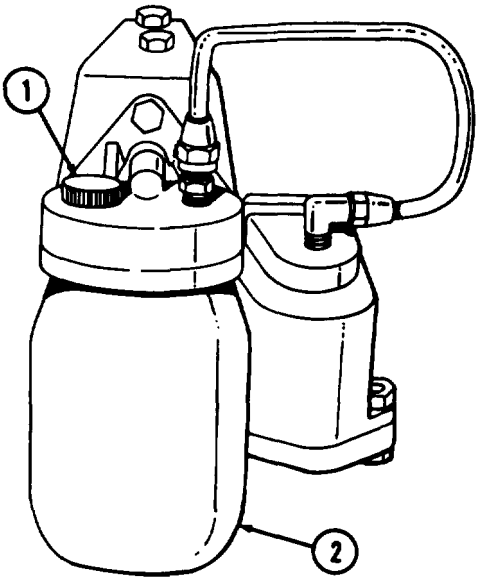


(2) Start engine coolant heater, if required (refer to paragraph 2-43).

(3) Perform after operation services in table 2-2.

(4) Remove all ice and snow from underside of vehicle, air cleaner intake. and from fuel tank(s).

(5) Refill fuel tank(s) as soon as possible.

(6) At end of daily operation, have batteries removed and stored in a warm place if engine coolant heater is not to be operated.

(7) Draining of the fuel filter/water separator is necessary to remove condensation in fuel system (refer to paragraph 3-11e.).

## 2-34. OPERATING IN EXTREME HEAT

**a. General.** Extreme heat exists when outside temperatures reach 95° F (35°C), or more. The effect of extreme heat on vehicle engine is a decrease in engine efficiency. Operators must adjust driving to conditions when operating in extreme heat.

TA 094419

**b. Before Operation.**

(1) Perform before operation services in table 2-2.

(2) Check for sand or insects embedded in front of radiator. Blow out all such obstructions with compressed air.

**c. Driving Vehicle.**

(1) Avoid continuous vehicle operation at high speeds. Avoid long, hard pulls on steep grades with transfer selector lever (3) in LOW. Drive slower in high altitude, hot climate operations.

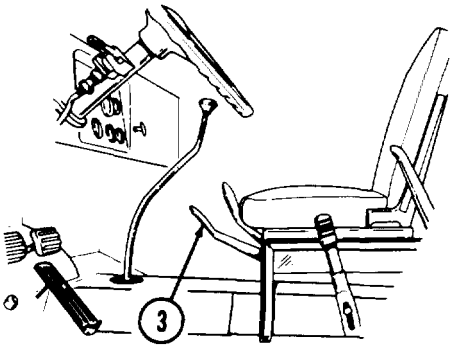


(2) Frequently check air cleaner indicator (5). If indicator shows red, perform emergency service (refer to paragraph 3-11g.), and notify organizational maintenance.

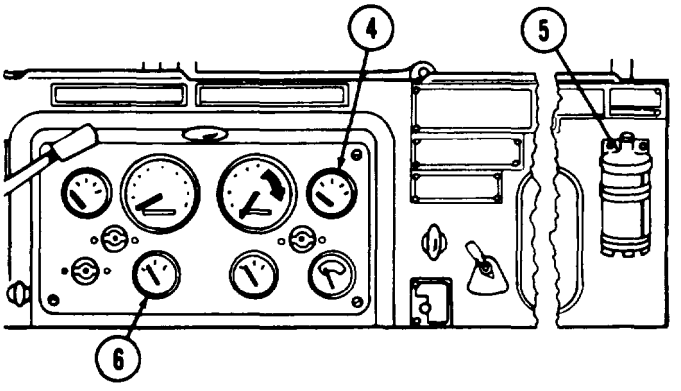


(3) Frequently check temperature gage (4) and oil pressure gage (6). Engine is overheating if one or more of the following conditions exist:

(a) Engine coolant temperature is more than 210° F (99° C) as indicated by temperature gage (4).

(b) Engine oil pressure drops below 38 psi (262 kPa) under normal operation or 15 psi (34 kPa) with engine at idle.

TA 094420

(4) If engine overheating occurs:

**CAUTION**

Do not raise vehicle hood. Engine will cool faster at idle with hood closed.

(a) Park vehicle, allowing engine to idle.

**NOTE**

Radiator fan and engine coolant will begin lowering engine temperature a few minutes after vehicle stops.

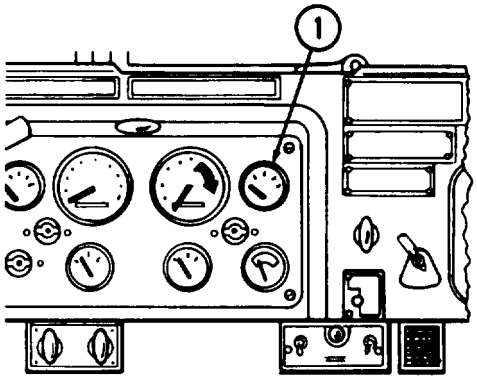


(b) Observe temperature gage (1) for indication that engine is steadily cooling.

(c) Shut off vehicle engine when engine temperature reaches normal operating temperatures 175° F to 195° F (79° C to 91° C) as indicated by temperature gage (1).

(d) Perform troubleshooting procedures as listed in table 3-1, after engine has cooled to normal operating temperatures 175° F to 195° F (79° C to 91° C).

**WARNING**

Severe burns can result from opening surge tank filler cap (2) while engine is running or before engine temperature has cooled below 175° F (79° C) as indicated by temperature gage (1).

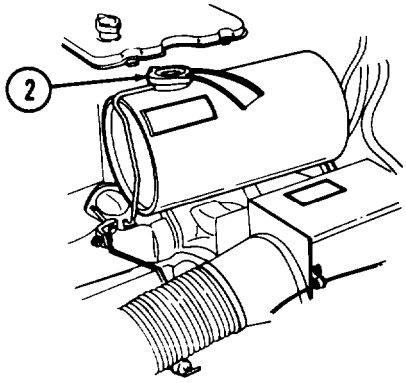


(e) Place a thick cloth over surge tank filler cap (2). Carefully turn cap (2) counterclockwise to its first stop to allow pressure to escape.

(f) Remove cap when cooling system pressure is vented and check coolant level.

**NOTE**

Surge tank should be three-quarters full.

(g) Start vehicle engine and add engine coolant as required.

TA 094421

**CAUTION**

Do not add coolant when engine is hot unless engine is running. Add coolant slowly.

(5) Proceed with operation. Report any overheating to organizational maintenance at completion of operation.

**d. Stopping or Parking.**

(1) Park vehicle under cover whenever possible to protect tires, canvas, paint, wood, seals, and batteries from sun, dust, and sand.

**NOTE**

Allow tires to cool before checking tire pressure. Air pressures in tires read higher when tires are hot.

(2) Adjust tire inflation according to table 1-4.

(3) Check batteries daily and service as required when operating in extreme heat.

## 2-35. OPERATING IN DUSTY, SANDY AREAS

**a. General.** Vehicles operating in dusty or sandy areas require frequent servicing of the air filter, cooling system, and lubrication points. Operators should be alert to engine overheating.

**b. Driving Vehicle.**

(1) Reduce tire inflation to 25 psi (172 kPa) to increase traction when operating in deep sand.

(2) When starting in sand or soft ground, put transfer selector lever (5) in LOW position and transmission gearshift lever (4) in "2" (second) gear (6).

(3) Gradually release clutch pedal (3) and accelerate slowly so wheels do not spin and dig into sand.

(4) Reinflate tires to normal operating pressures after vehicle has cleared deep sand (see table 1-4).

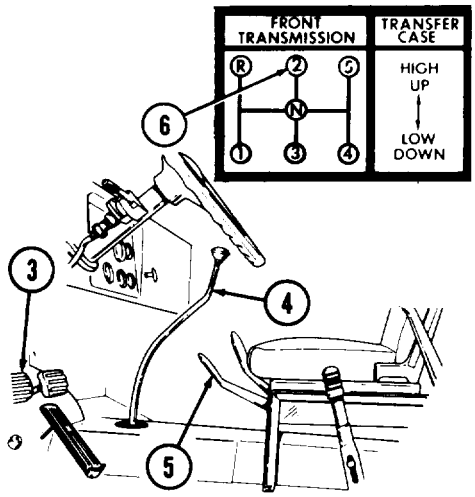


**CAUTION**

Use a second vehicle with winch or wrecker to recover vehicles sunk in deep sand. Do not attempt to jump vehicles out of deep sand with quick transmission gear changes.

TA 094422

**c. Stopping or Parking.**

(1) Park vehicle under cover whenever possible to protect tires, canvas, paint, wood, seals, and batteries from sun, dust, and sand.

(2) At end of daily operation, use compressed air to remove all sand from vehicle engine and areas around brakes and drums. See after operation services, table 2-2.

(3) If cover is not available, cover vehicle with paulins. When entire vehicle cannot be covered, protect windows, cab, and engine compartment with paulins to prevent entry of sand or dust.

## 2-36. OPERATING UNDER RAINY OR HUMID CONDITIONS

**a. General.**

(1) Material inactive for long periods in hot, humid weather can rust rapidly. Fungus growth may develop in the fuel tank as well as on canvas paulin seats, and other components. Frequent inspections. cleaning, and lubrication are necessary to maintain the readiness of vehicles in rainy or humid conditions.

(2) Fuel filter/water separator must be drained frequently because of high condensation in fuel system (refer to paragraph 3-11e.).

**b. Driving Vehicle.**

(1) Do not spin wheels when placing vehicle in motion in heavy rain or muddy conditions. If necessary, place transfer selector lever (4) in LOW to obtain a slow, firm start.

**WARNING**

- Pump brakes gradually when stopping vehicle on wet or slippery roads to avoid losing control and causing injury to personnel.
- Do not operate vehicle on wet, smooth roads with lowered tire inflation. Do not operate at too great a speed for road conditions. Low tire inflation or excessive speeds may result in loss of vehicle control on wet, smooth roads, and injury to personnel.

(2) Lower tire inflation to 25 psi (172 kPa) only when operating off-the-road in heavy rain. Reinflate tires immediately to correct pounds per square inch (kilopascals) when operation changes to paved roads. Refer to table 1-4 for tire inflation data. Refer to paragraph 3-16 for instructions on tire inflation using vehicle air system.

## 2-37. OPERATING IN DEEP MUD

**a. General.**

(1) Use tire chains in deep mud operations.

**CAUTION**

Tire chains must be used on all matching sets of driving wheels. Attempting to operate vehicle in deep mud when only one driving wheel is equipped with tire chain can result in serious damage to tire and/or power train.

**b. Driving Vehicle.**

(1) Approach large water-filled chuckholes with caution. Chuckhole depth is difficult to determine, and vehicle may become mired.

(2) Be alert at all times to engine and vehicle speed. Be prepared to downshift transmission gearshift lever (3) and transfer selector lever (4), if necessary, to prevent vehicle from bogging down and becoming mired.

(3) Skidding, loss of steering, and traction, are operating problems in mud. When rear end skidding occurs, immediately turn front wheels in direction of skid. Let up on accelerator pedal (5) and apply service brakes (2) gradually. Do not depress clutch pedal (1).

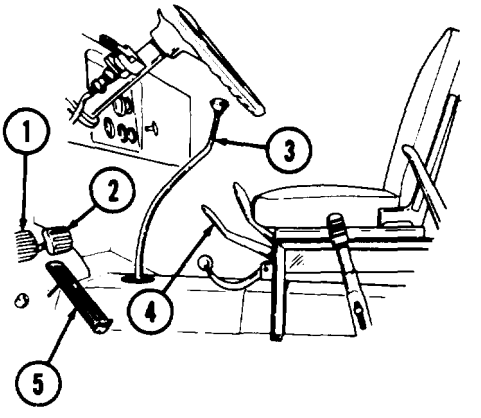


**CAUTION**

Use a second vehicle with winch to recover vehicles sunk in deep mud. Do not spin wheels. Do not attempt to jump vehicle out of deep mud with quick transmission gear changes.

TA 094424

**c. After Operation.**

(1) Wash all mud from vehicle as soon as possible, before it has time to dry and harden.

(2) Remove tire chains from driving wheels.

(3) If vehicle front winch was used, clean and lubricate.

(4) At end of daily operation, perform after operation services as outlined in table 2-2.

## 2-38. OPERATING IN SALT WATER

**a. General.** Salt water causes considerable damage to vehicle components. For this reason, do not drive needlessly in or through salt water. Vehicle components that do come in contact with salt water must be washed with fresh water as soon as possible. Normally, all important vehicle components will ford salt water up to 30 inches (76 centimeters) in depth without fording kit and 78 inches (198 centimeters) with kit installed.

**b. Preparation for Fording.**

(1) Make sure engine fuel tank cap(s), hydraulic oil filter cap(s), engine oil dipstick, surge tank filler cap, power steering reservoir cap, engine oil fill cap, and battery caps are secure.

(2) If fording is to be in more than 30 inches (76 centimeters) of water, a deepwater fording kit must be installed by direct support maintenance personnel.

(3) On all models, remove flywheel housing drainplug (3) from storage boss (2) and install it in drainport (1).

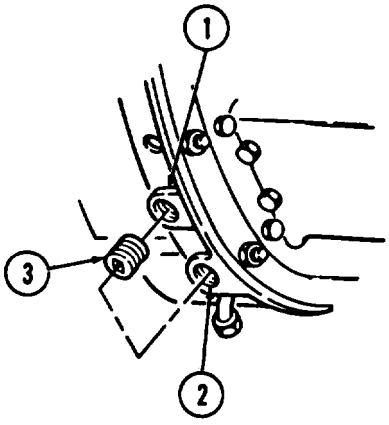


TA 094425

(4) On M819 models, remove breather caps from crane oil reservoir (4) and swing motor (5). Replace caps with pipe plugs, stored near the crane oil reservoir.

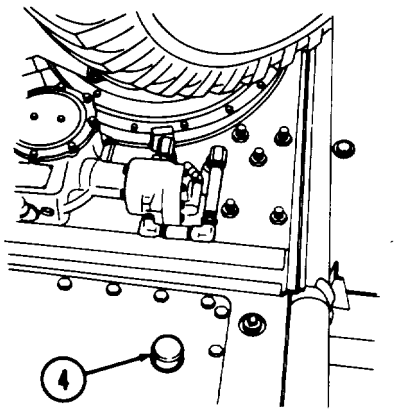


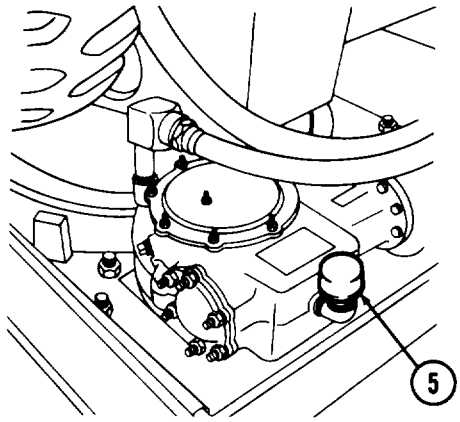


**c. Fording Operation in Salt Water.**

(1) Place transmission gearshift lever (6) in "1" (first) gear (8) and transfer selector lever (7) in LOW.

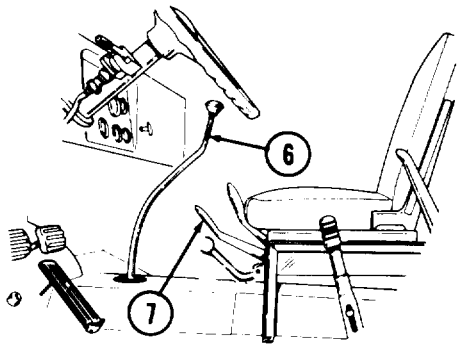


**CAUTION**

Do not attempt to ford your vehicle at depths greater than 78 inches (198 centimeters). Limit speed to 3 or 4 miles per hour (5 or 6 kilometers) while fording.

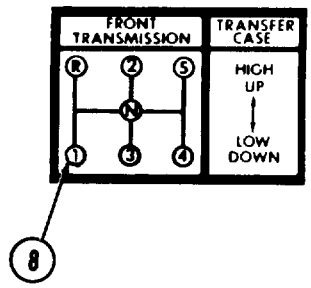


TA 094426

(2) Enter water slowly at a right angle in area with a gentle slope. Pull out fording control handle (1) immediately upon entering water.

(3) Maintain an even vehicle speed.

(4) Push in fording control handle (1) immediately upon leaving water.

**d. After Fording Operation.**

(1) Remove flywheel housing drainplug (4) from drainport (2) and install in storage boss (3).

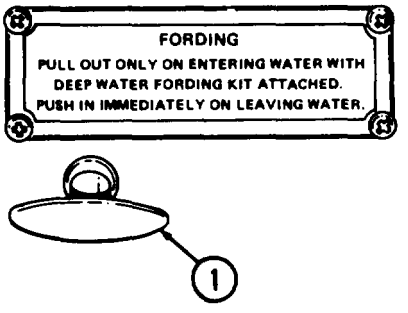


**NOTE**

Fording control handle will be available only if deep water fording kit is installed.

(2) Wash with fresh water all parts of vehicle which were in contact with salt water as soon as possible.

(3) On M819 models, remove pipe plugs from crane oil reservoir (6) and swing motor (5) and replace with breather caps. Store pipe plugs near crane oil reservoir.

**NOTE**

Vehicles completing fording operation must be serviced by Organizational Maintenance as soon as possible.

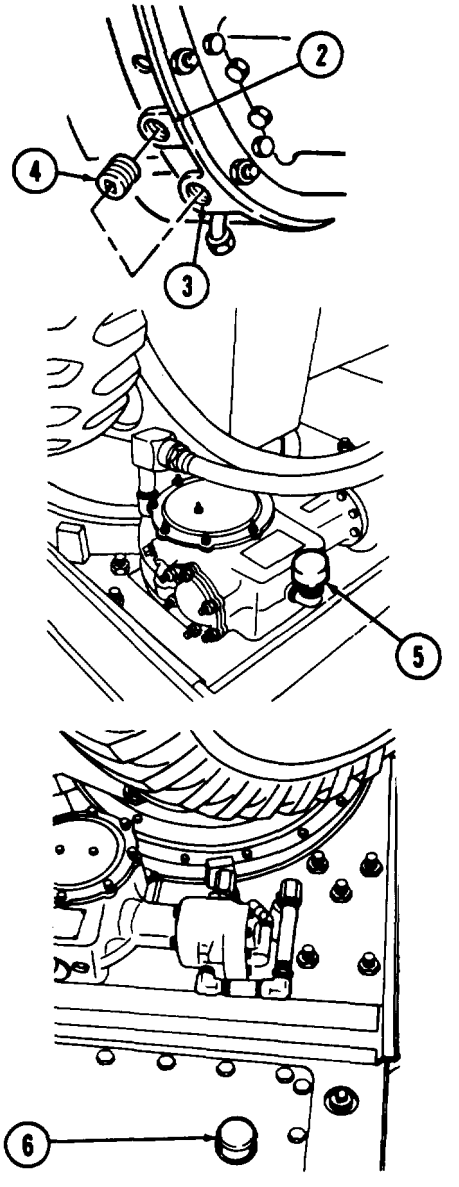


TA 094427

# Section V. OPERATION OF AUXILIARY EQUIPMENT (SPECIAL PURPOSE KITS)

## 2-39. GENERAL

a. Certain operating and weather conditions require additional equipment to be added to the vehicle. The using activity informs direct support maintenance to install special support equipment when needed.

b. Special purpose kits for M809 series 5-ton trucks are listed in table 2-6.

*Table 2-6. M809 Series Special Purpose Kits*

| Kit Description | M809 (w/w, wo/w) | M809A1 (w/w) | M810 (w/w, wo/w) | M811 (w/w, wo/w) | M811A1 (w/w) | M811A2 (w/w) | M812 (w/w) | M812A1 (w/w) | M813 (w/w, wo/w) | M813A1(w/w, wo/w) | M814 (w/w, wo/w) | M815 (w/w) | M816 (w/w) | M817 (w/w, wo/w) | M818 (w/w, wo/w) | M819 (w/w) | M820 (wo/w) | M820A1 (wo/w) | M820A2 (wo/w) | M821 (wo/w) |
|---|---|---|---|---|---|---|---|---|---|---|---|---|---|---|---|---|---|---|---|---|
| Tarpaulin extension (long cargo) | | | | | | | | | | | X | | | | | | | | | |
| Hardtop closure | X | X | X | X | X | X | X | X | X | X | X | X | X | X | X | X | X | X | X | X |
| "A" frame (w/w vehicles only) | | | | | | | | | X | X | X | | | | | | | | | |
| Troop seats & tarpaulin | | | | | | | | | | | | | | X | | | | | | |
| Lifting, front | X | X | X | X | X | X | X | X | X | X | X | X | X | X | X | X | X | X | | X |
| Cargo tiedown | | | | | | | | | X | X | X | | | | | | | | | |
| Slave receptacle | X | X | X | X | X | X | X | X | X | X | X | X | | X | X | | X | X | X | X |
| Slave receptacle (winterization only)* | X | X | X | X | X | X | X | X | X | X | X | X | X | X | X | X | X | X | X | X |
| Personnel heater (winterization)* | X | X | X | X | X | X | X | X | X | X | X | X | X | X | X | X | X | X | X | X |
| Personnel heater, hot water | X | X | X | X | X | X | X | X | X | X | X | X | X | X | X | X | X | X | X | X |
| Coolant heater (winterization)* | X | X | X | X | X | X | X | X | X | X | X | X | X | X | X | X | X | X | X | X |
| Thermal barrier (winterization)* | X | X | X | X | X | X | X | X | X | X | X | X | X | X | X | X | X | X | X | X |
| Deepwater fording | X | X | X | X | X | X | | | X | X | X | X | X | X | X | X | X | X | X | X |
| Airbrake, hand | X | X | X | X | X | X | X | X | X | X | X | | | X | | | X | X | X | |
| Alternator conversion (60-100 amps) | X | X | X | X | X | X | X | X | X | X | X | X | X | X | X | X | X | X | X | X |
| Bow & tarp, cargo body (short) | | | | | | | | | X | | | | | | | | | | | |
| Bow & tarp, cargo body (long) | | | | | | | | | | | X | | | | | | | | | |
| Bow & tarp, cargo body (dropside) | | | | | | | | | | X | | | | | | | | | | |
| Stabilizer van body | | | | | | | | | | | | | | | | | X | X | X | |
| Air drop, bumper & lifting shackles | X | X | X | X | X | X | X | X | X | X | X | | | X | X | | | | | |
| Machine gun mtg. cal. .50 or 7.62 mm | X | X | X | X | X | X | X | X | X | X | X | | X | | X | X | | | | |
| Windshield washer | X | X | X | X | X | X | X | X | X | X | X | X | X | X | X | X | X | X | X | X |
| Intervehicular power cable (slave) | X | X | X | X | X | X | X | X | X | X | X | X | | X | X | | X | X | X | X |
| Fire extinguisher, 10 B C | X | X | X | X | X | X | X | X | X | X | X | X | X | X | X | X | X | X | X | X |
| Tachograph | X | X | X | X | X | X | X | X | X | X | X | X | X | X | X | X | X | X | X | X |
| Seatbelt (floating seat & fixed seat) | X | X | X | X | X | X | X | X | X | X | X | X | X | X | X | X | X | X | X | X |
| Mud flap | | | | | | | | | | | | | | | X | | | | | |
| Low air pressure warning light | X | X | X | X | X | X | X | X | X | X | X | X | X | X | X | X | X | X | X | X |
| Convoy warning light | X | X | X | X | X | X | X | X | X | X | X | X | X | | X | X | | | | X |
| Convoy warning light | | | | | | | | | | | | | | X | | | X | X | X | |

* Arctic winterization kit includes: coolant heater, personnel heater, slave receptacle, and thermal barrier kits.

TA 094428

c. Operation instructions for the following special purpose kits are covered herein:

(1) A-frame kit (paragraph 2-44).

(2) Arctic winterization kit (paragraph 2-43).

(3) Airbrake hand control kit (paragraph 2-47).

(4) Bow and tarp kit (paragraph 2-41).

(5) Deepwater fording kit (paragraph 2-40).

(6) Hot water personnel heater kit (paragraph 2-42).

(7) Troop seat kit (paragraph 2-46).

(8) Windshield washer kit (paragraph 2-45).

## 2-40. OPERATING DEEPWATER FORDING KIT

**a. General.** The deepwater fording kit allows M809 series vehicles to cross through water up to 78 inches (198 centimeters) deep.

**WARNING**

After fording, do not rely on brakes until dry. Brake failure can cause severe injury to personnel and/or damage to vehicle.

**CAUTION**

Never attempt deepwater fording unless water depth is known to be 78 inches (198 centimeters) or less, and bottom surface is known to be hard. Limit speed to 3 or 4 miles (4.8 or.6.4 kilometers) per hour.

**b. Preparation for Fording.**

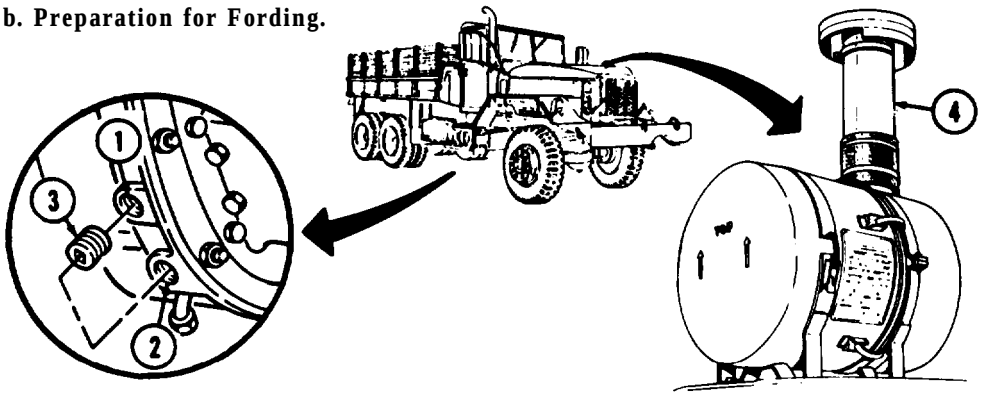


(1) Make sure air intake extension (4) connection is tight.

(2) Tighten fuel tank filler cap(s) securely.

(3) Make sure battery filler caps are tightened securely.

(4) Secure all loose objects on vehicle.

(5) Remove flywheel housing drainplug (3) from storage boss (2) and install in flywheel drainport (1).

TA 094429

(6) On M819 models, remove breather caps from crane oil reservoir (6) and swing motor (5). Replace caps with pipe plugs, stored near crane oil reservoir.

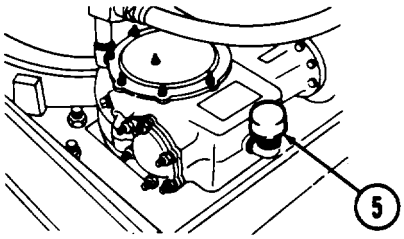


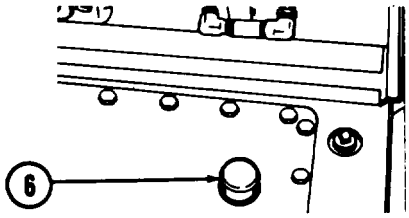


**c. Fording Operation.**

(1) Start engine; refer to paragraphs 2-12 and 2-13.

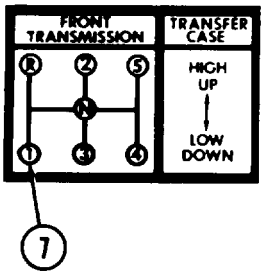


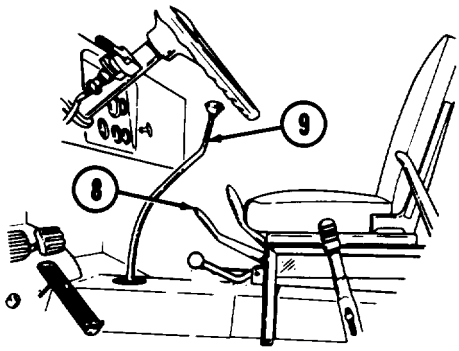


(2) Move gearshift lever (9) to "1" (first) gear (7).

(3) Place transfer selector lever (8) in LOW.

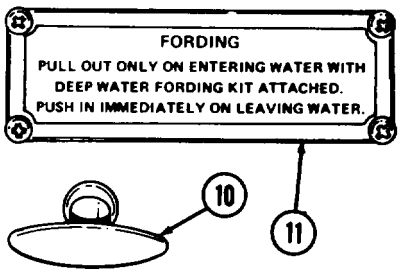


(4) Enter water slowly. Pull out fording control handle (10) immediately upon entering water. Follow instructions on data plate (11).

(5) Push in fording control handle (10) immediately upon leaving water.

**d. After Fording.**

(1) Remove flywheel housing drainplug (3) from drainport (1) and install in storage boss (2).

(2) On M819 models, remove pipe plugs from crane oil reservoir (6) and swing motor (5) and replace with breather caps. Store pipe plugs near crane oil reservoir.

(3) If fording was through salt water, wash off all salt deposits as soon as possible.

**NOTE**

Vehicles completing deepwater fording operation must be serviced by organizational maintenance as soon as possible.

TA 094430

## 2-41. BOW AND TARP KIT

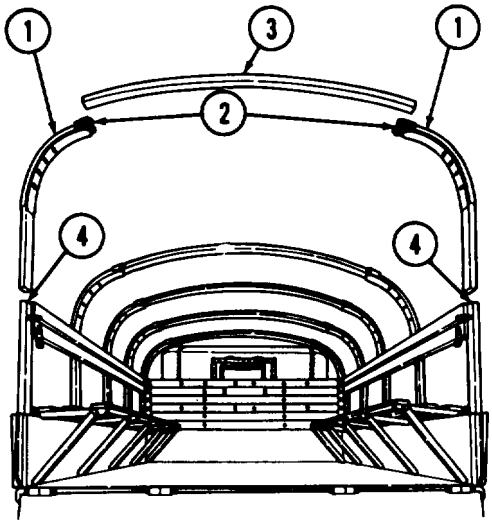


**a. Bow and Tarp Kit Installation.**

(1) Insert staves (1) into side rack sockets (4).

(2) Insert overhead crossbows (3) into staves (1). Secure each end of overhead crossbows (3) in place with stave latches (2)

**NOTE**

Some overhead crossbows secure in place with screws and washers instead of latches.

(3) Thread two lashing ropes (7) into center eyelets of forward end curtain (9). Place forward end curtain in position and wind ropes (7) alternately around overhead bow (8) and through eyelets.

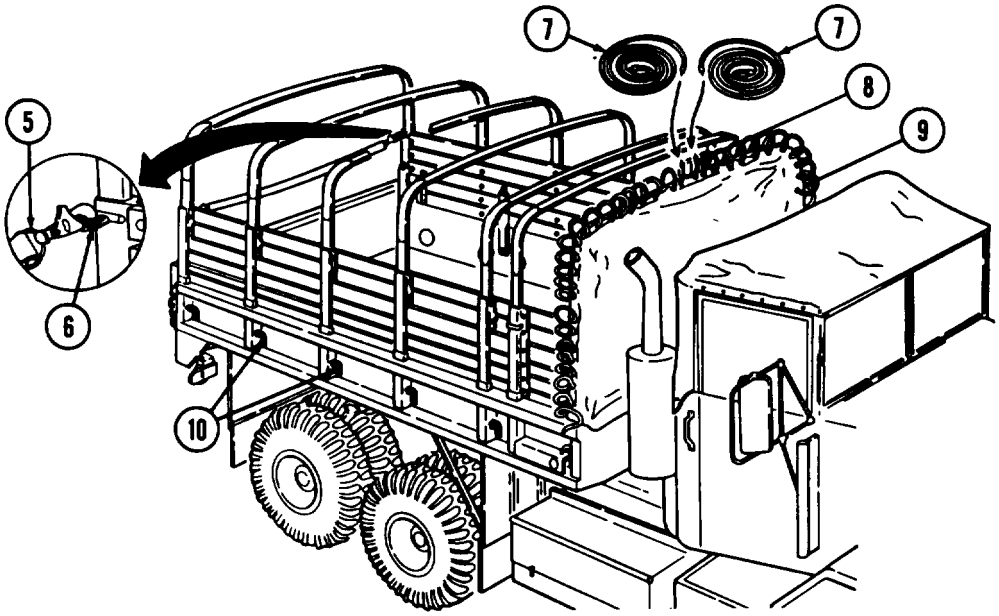


(4) Secure rope end on each side of vehicle to lashing hooks (10).

(5) Repeat procedure with rear end curtain. Do not tie down bottom of rear end curtain until bow and tarp installation is completed.

**NOTE**

Do not tie down bottom of rear end curtain when transporting troops.

TA 094431

(6) Install paulin top as follows:

(a) Place folded paulin (11) across top center bow with half marked FRONT facing front of truck.

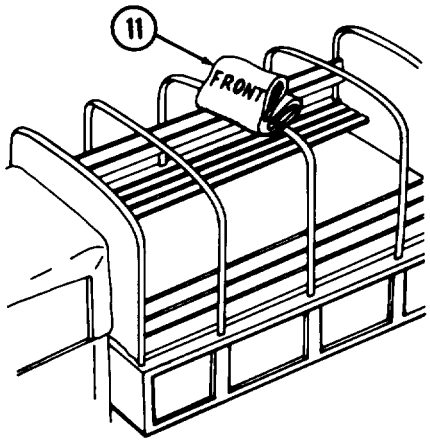


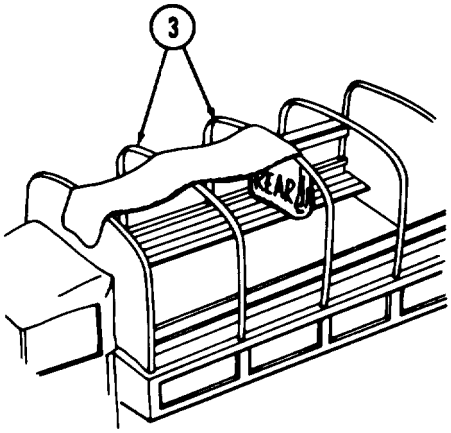


(b) Unfold front of paulin (11) over bows (3) all the way. Unfold other end of paulin top toward rear of truck.

(c) Unfold one side of paulin(11), then unfold other side toward sides of truck. Allow loose paulin sides to drape over side of truck.

(d) Tighten lashing ropes (7) to lashing hooks (10) on each side of truck.

(7) Secure personnel safety strap (5) to eyelets (6) on side rails nearest tailgate.

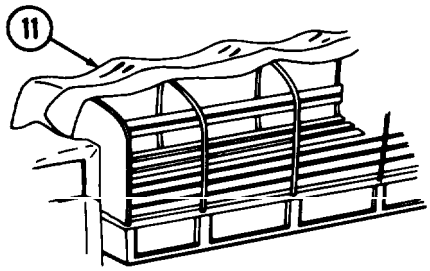


**NOTE**

Ropes should be snug, but not too tight.

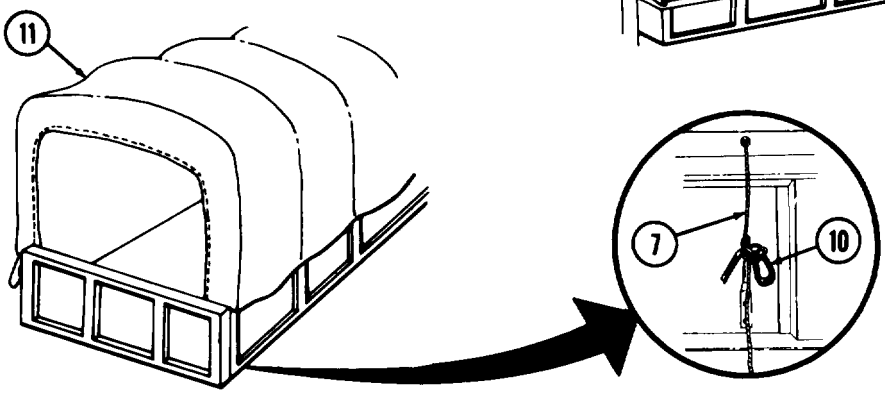


TA 094432

**b. Raising Paulin for Ventilation.**

**NOTE**

This operation requires two or three crewmembers.

(1) Remove rear paulin end curtain (1), if installed.

(2) Untie all paulin lashing ropes (2).

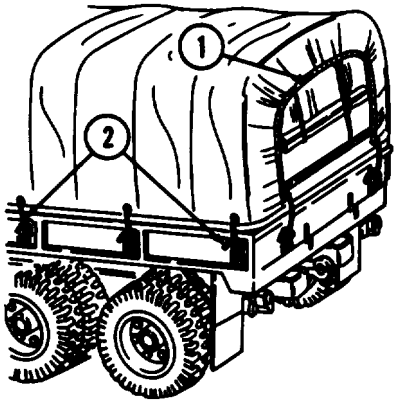


(3) Fold up paulin (5) into three to five folds until straps (3) attached to staves are exposed.

(4) Fasten folded paulin in place using straps (3) and buckles (4) attached to outside of paulin.

(5) Tie front and rear lashing ropes to end staves (6).

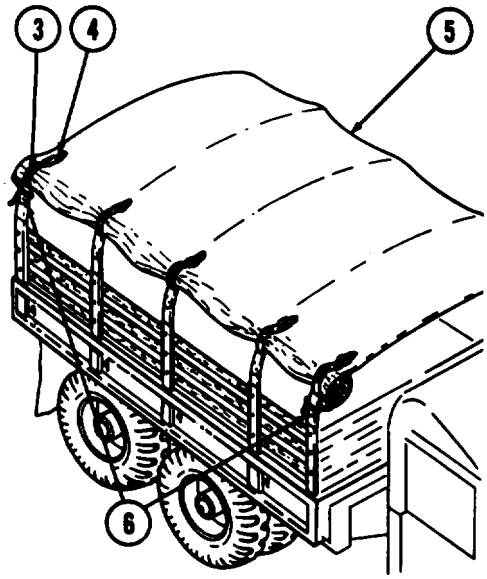


**c. Bow and Tarp Kit Removal.**

**CAUTION**

Do not fold or stow paulin when wet. Damage to paulin can result.

(1) Remove paulin (5) top from truck and lay flat on ground with buckles (7) on top.

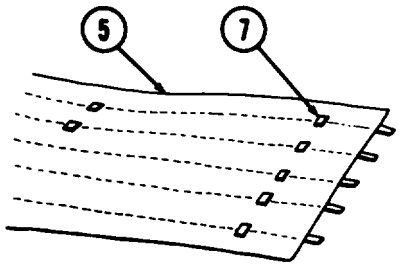


TA 094433

(2) Fold eyelet side of paulin (5) to first row of buckles.

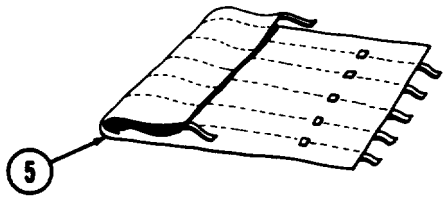


(3) Fold paulin (5) over again, and then one more time.

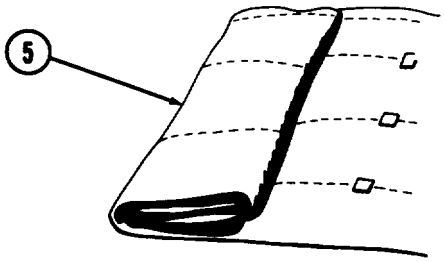


(4) Fold other side of paulin (5) once, to the row of buckles.

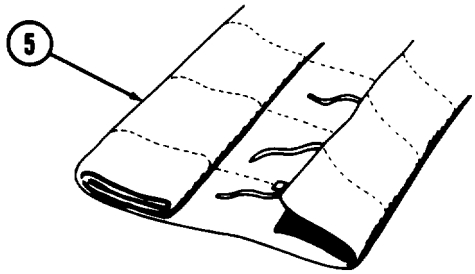


(5) Fold paulin (5) again, until the two folds meet.

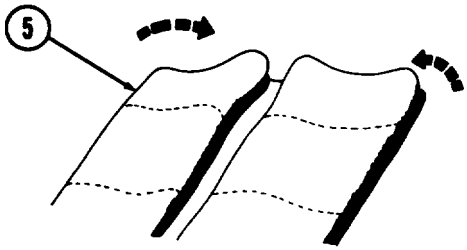


(6) Fold the side with three folds over the side with four folds.

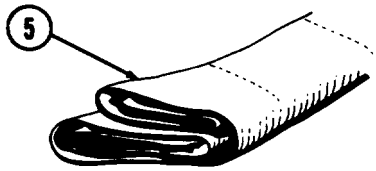


(7) Fold paulin (5) end halfway to the first seam, and then over again, until inner edge of paulin is at middle.

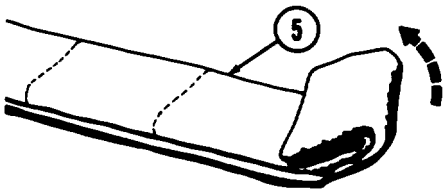


TA 094434

(8) Repeat folding on opposite paulin (1) end until both folded ends meet.

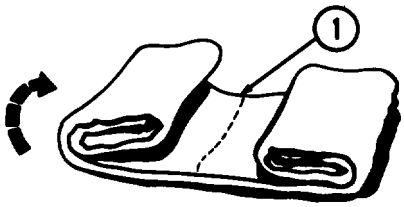


(9) Place folded paulin (1) front end up and with chalk, mark FRONT. Make sure that letters are big enough to see.

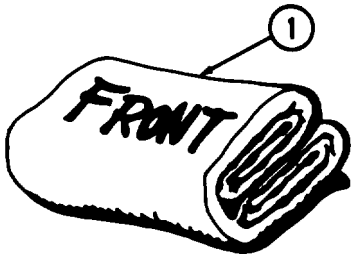


(10) Turn folded paulin (1) over and mark REAR.

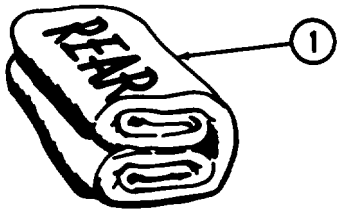


(11) Remove end curtains (2) and fold them to approximately the same dimensions as the paulin.

(12) Place paulin (1) and end curtains (2) on a pallet for storage.

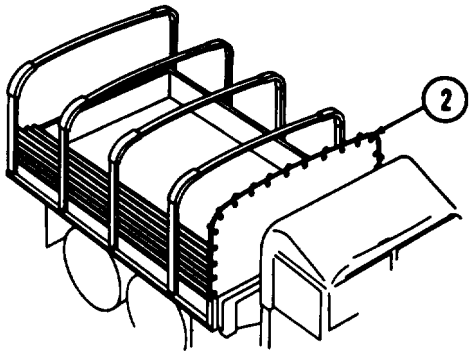


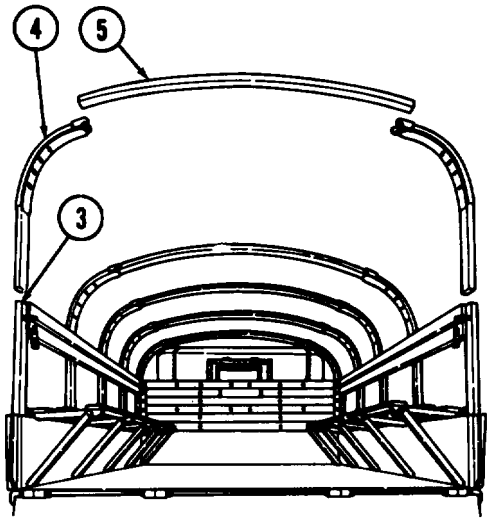


(13) Unlatch and remove overhead crossbows (5) from staves (4).

(14) Remove staves (4) from side rack sockets (3).

TA 094435

(15) Stow staves (4) in pockets (7) on forward end of truck sides. On M813 and M813A1 models, staves are stored in pockets on cargo body directly behind vehicle cab (6).

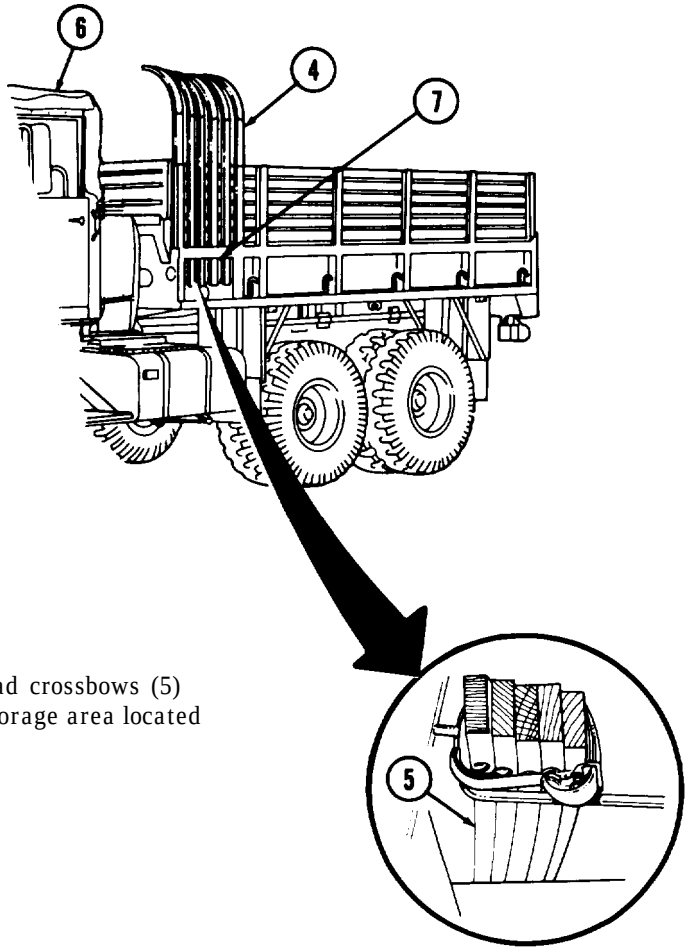


(16) Strap overhead crossbows (5) together and stow in storage area located under cargo body.

**CAUTION**

Racks, seats, bows, and covers of troop seat and cover kit from dump trucks must be removed and stowed off vehicle when dump truck is used for dumping operations.

**NOTE**

Bows of troop seat and cover kit for dump trucks are stowed in front stowage racks when not in use.

TA 094436

## 2-42. HOT WATER PERSONNEL HEATER KIT

**a. General.** The hot water personnel heater kit includes a heater at right side of engine, controls below instrument panel, winterfront cover, and necessary ducting.

**CAUTION**

In very cold weather, heat cab before starting defroster. Windshield glass can be damaged by sudden changes in temperature.

**NOTE**

The hot water personnel heater kit is effective in temperatures down to -25° F (-13°C). Colder temperatures require use of arctic winterization kit.

**b. Operation of Hot Water Personnel Heater.**

(1) Start engine (refer to paragraphs 2-12 and 2-13). Allow engine to warm until temperature gage (1) reads about 140° F (60° C).

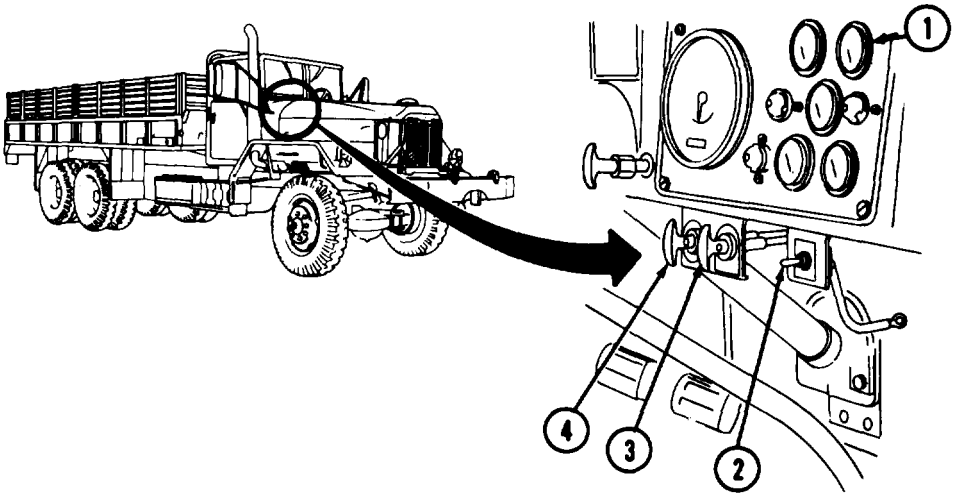


(2) Pull air control handle (3) out to allow warm air flow to cab.

(3) Pull defroster control handle (4) out to allow warm air flow to windshield.

(4) Move heater blower motor switch (2) to HIGH or LOW position as needed.

(5) Move air control handle (3) and defroster control handle (4) in or out as needed.

(6) To stop heating or defrosting, move blower motor switch (2) to OFF position and push in air control handle (3) and defroster control handle (4).

(7) Stop engine (refer to paragraph 2-16).

TA 094437

**c. Operating Winterfront Cover.**

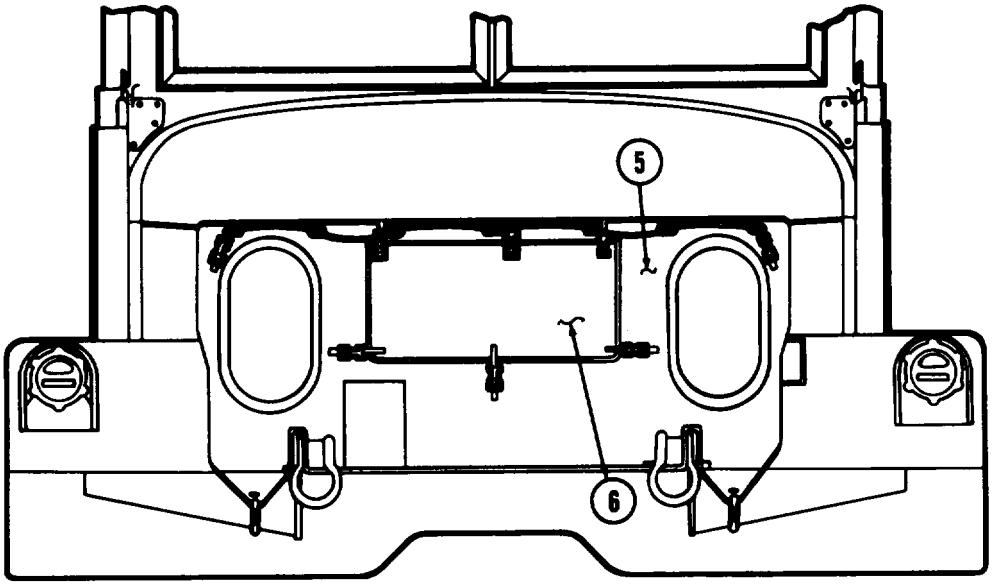


(1) Install winterfront cover (5) to brushguard during cold weather operations when engine cannot maintain normal operating temperatures 175°F to 195° F (79°C to 91°C).

(2) Secure cover flap (6) open when engine operating temperature exceeds 180°F (82°C).

**CAUTION**

If engine temperature continues to rise after opening cover flap, remove winterfront cover entirely to prevent overheating.

(3) Secure cover flap (6) closed when engine operating temperature remains below 180° F (82°C).

(4) Close cover flap (6) during standby periods or overnight when engine is not running.

TA 094438

## 2-43. ARCTIC WINTERIZATION KIT

**a. General.** Arctic winterization kits are installed by direct support maintenance personnel on vehicles operating in -25° F to -65° F (-31°C to -54° C) temperatures or less The kit includes hardtop enclosure, quilted engine compartment cover, fuel burning personnel heater, fuel burning engine coolant heater, thermal barrier and slave receptacle kits, control lever covers, and an alcohol evaporator.

**b. Operating Engine Compartment Covers.**

**NOTE**

The engine compartment cover (1) is installed at direct support level. Radiator winterfront brush guard cover (3) and the cover flap (2) used with the hot water personnel heater kit, discussed on previous page, are identical.

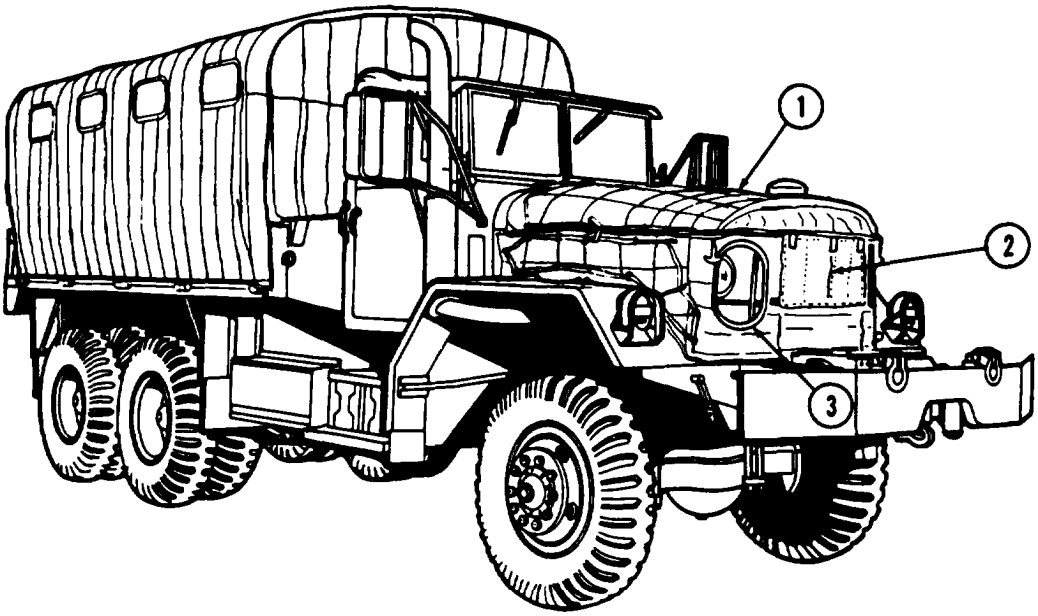


(1) Start engine with radiator winterfront cover flap (2) closed. Refer to paragraph 2-13 for cold-weather starting instructions.

(2) Roll up and secure radiator cover flap (2) in OPEN position when engine temperature rises above 180° F (82° C).

(3) If engine temperature should exceed 195° F (91°C), completely remove engine compartment cover (1) to avoid overheating.

(4) Open and close cover flap (2) as required during arctic operations to maintain engine temperature within normal operating range of 175° F to 195° F (79° C to 91° C).

**c. Operating Fuel Burning Personnel Heater.**

**CAUTION**

Do not operate engine coolant heater control box and personnel heater control box at the same time.

TA 094439

**NOTE**

Fuel shutoff valves are located in battery box.

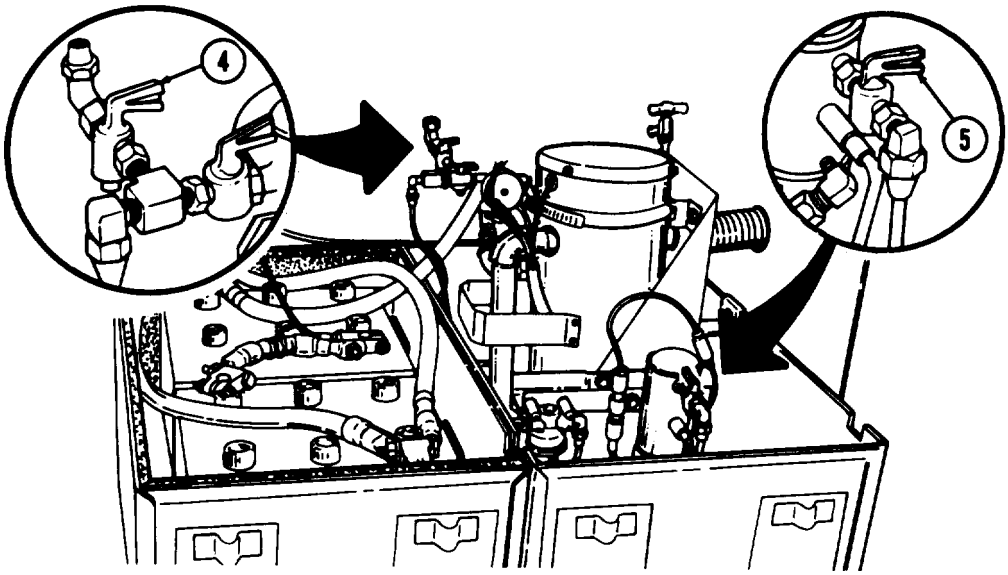


(1) Open fuel shutoff valves (4) and (5) by turning counterclockwise.

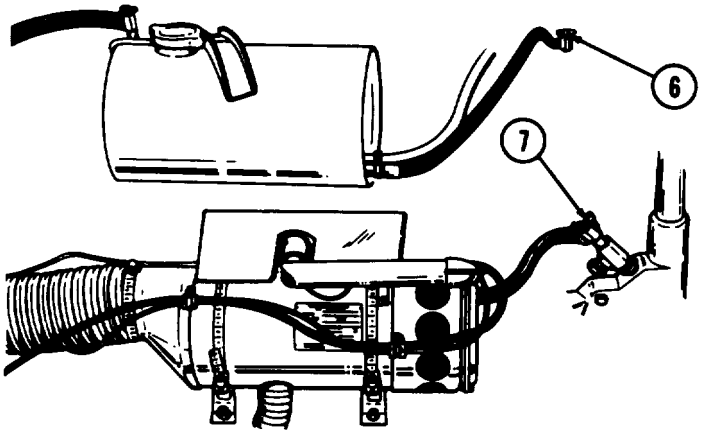


(2) Make certain both coolant shutof valves (6) and (7) are open (turned counterclockwise).

TA 094440

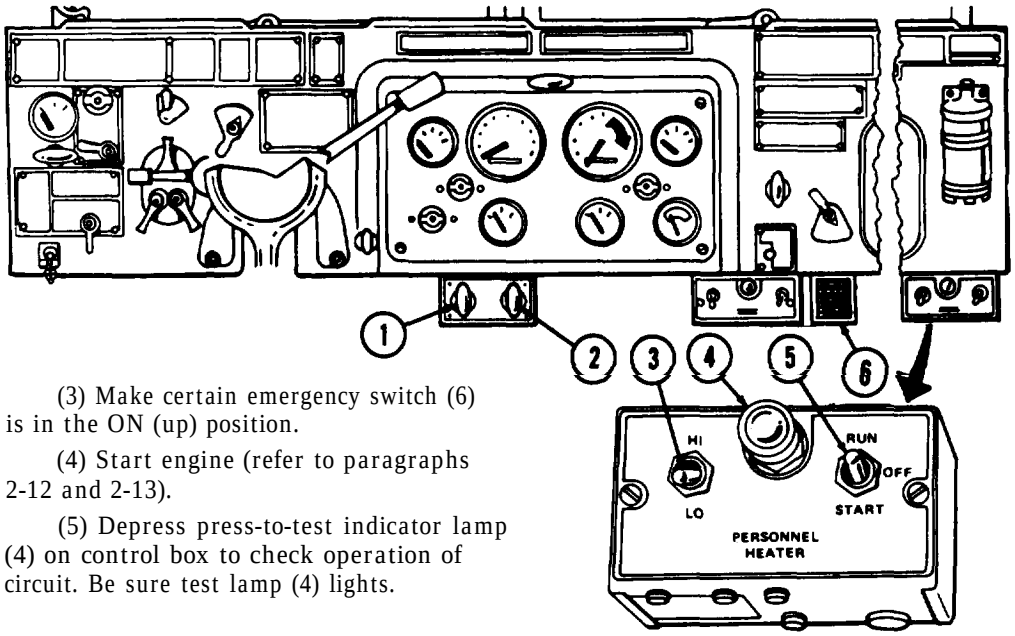


(3) Make certain emergency switch (6) is in the ON (up) position.

(4) Start engine (refer to paragraphs 2-12 and 2-13).

(5) Depress press-to-test indicator lamp (4) on control box to check operation of circuit. Be sure test lamp (4) lights.

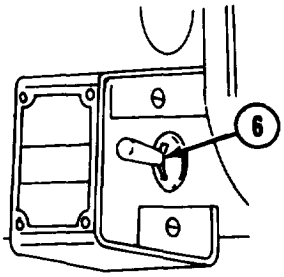


(6) Set HI-LO switch (3) on control box in HI or LO position, depending upon heating needs.

(7) Turn run-off-start switch (5) in control box down to START position. Hold in that position until indicator lamp (4) again lights. (Switch is spring-loaded and must be held down for at least 9 seconds.)

**NOTE**

If switch (5) is moved to RUN position before indicator lamp (4) lights, heater will not operate.

(8) As soon as indicator lamp (4) lights, turn switch (5) to RUN position, with no hesitation at OFF position.

**NOTE**

If heater fails to start, turn switch (5) off and repeat operations (3) through (6) above. If heater fails to start after two attempts, notify organizational maintenance that service is required.

(9) Adjust hot air flow with heater air control handle (2). Adjust defroster control handle (1), as required, for defrosting. All heated air is directed at the windshield when defroster control handle (1) is pulled all the way out. Preheat cab before defrosting windshield to avoid glass damage from sudden temperature changes.

TA 094441

(10) To shut down heater, turn run-off-switch (5) to OFF (center) position. Check indicator lamp (4) to make sure lamp goes out and blower shuts down after purge cycle is completed.

**NOTE**

Blower motor will continue to run for approximately 1 to 3 minutes after fuel flow is shut off, until heater is purged and heat exchanger has cooled. Then blower motor stops and indicator lamp (4) goes out.

(11) In the event of an NBC attack, lift emergency switch guard and pull down emergency switch (6) to OFF position.

(12) Shut off engine (refer to paragraph 2-16).

**d. Operating Fuel Burning Engine Coolant Heater.**

**NOTE**

The fuel burning engine coolant heater is designed to keep the engine compartment warm when truck is not in use. This heater should not be used while operating the truck.

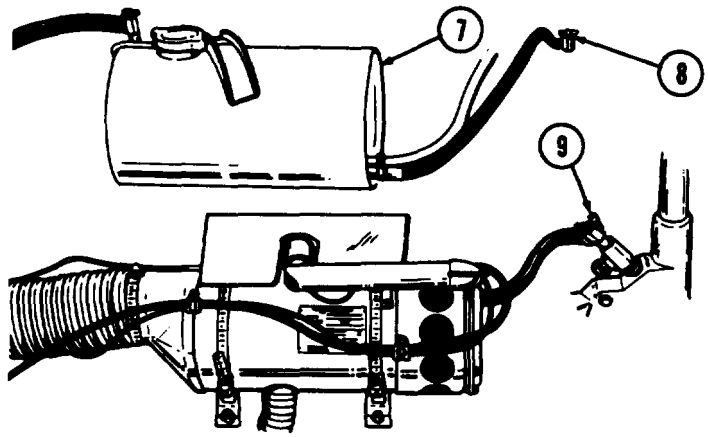


(1) Make sure coolant shutoff valves on engine water manifold (9) and engine oil cooler housing (8) are in fully opened (counterclockwise) position, and that shutoff valve in engine coolant heater box is in (counterclockwise) fully opened position.

(2) Make sure coolant is at proper level in surge tank (7). Tank should be filled to approximately bottom end of fill tube.

TA 094442

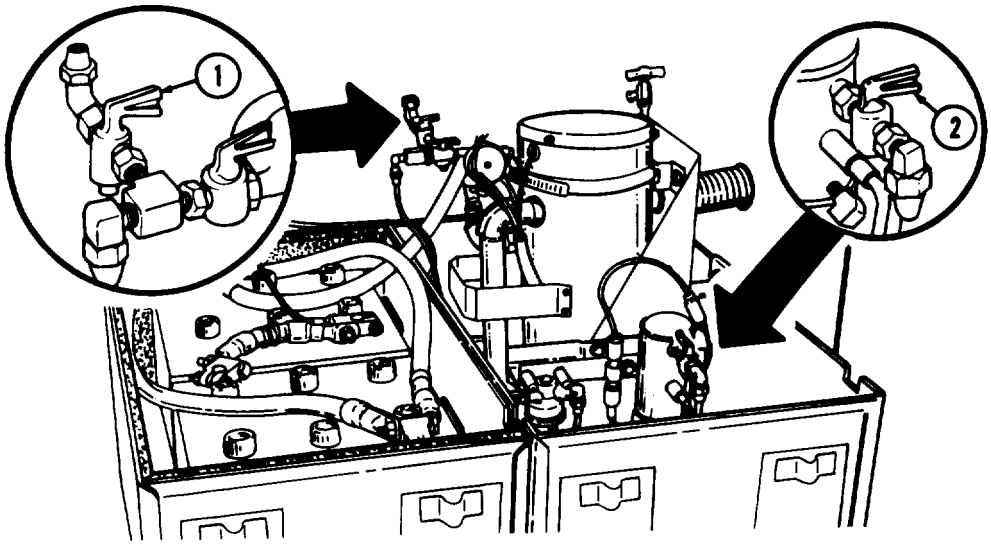


(3) Open fuel shutoff valve (1) for coolant heater by turning counterclockwise. Open valve (2) at coolant heater fuel pump in the same way.

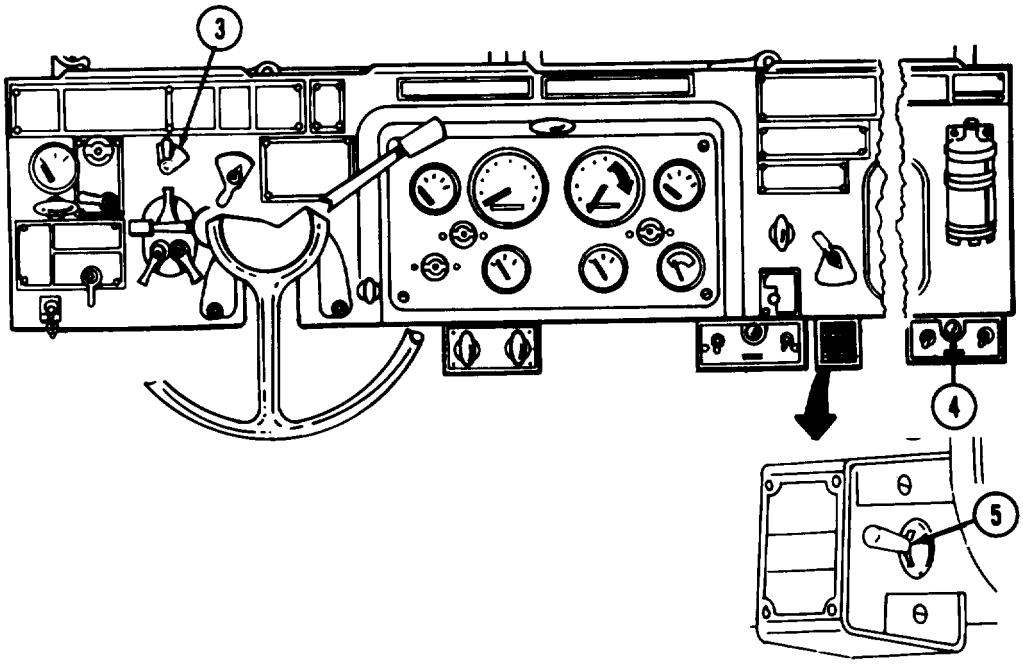


(4) Make sure emergency switch (5) is in ON position.

(5) Move battery switch lever (3) to ON position.

(6) Depress press-to-test indicator lamp (4) on control box to check operation of circuit. Be sure indicator lamp (4) lights.

TA 094443

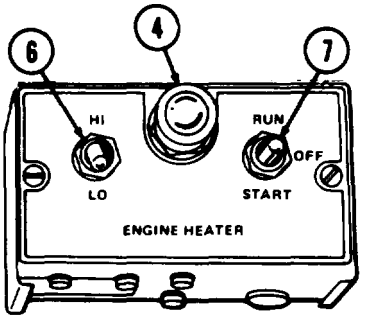


(7) Set HI-LO switch (6) on control box to HI or LO position, depending upon heating needs.

(8) Turn run-off-start switch (7) on control box to START position. Hold in that position until indicator lamp (4) again lights. (Switch is spring-loaded and must be held down.)

**NOTE**

If switch (7) is moved to RUN position before indicator lamp (4) lights, heater will not operate.

(9) As soon as indicator lamp (4) lights, turn switch (7) to RUN position, with no hesitation at OFF position.

**NOTE**

If engine coolant heater fails to start, turn run-off-start switch (7) to OFF position. Repeat operations (4) through (9). if heater fails to start after two attempts, notify organizational maintenance that service is required.

(10) Make sure vehicle fuel tank(s) are full if engine coolant heater is to operate for an extended period.

**NOTE**

Do not operate engine coolant heater when running vehicle engine. Do not idle vehicle engine to maintain operating temperature. Use coolant heater for easy starting during standby periods.

(11) Set HI-LO switch (6) as required, for desired heater output. If switch (6) is in HI position, heater control will automatically change to LO position whenever coolant temperature exceeds 195° F (90° C). If coolant temperature falls below 120°F (49° C), heater will return to HI.

(12) The LO setting is suitable for standby operation.

(13) To shut down engine coolant heater, turn run-off-start switch (7) to OFF position.

(14) Check indicator lamp (4) to make sure lamp goes out and blower motor shuts down after purge cycle is completed.

TA 094444

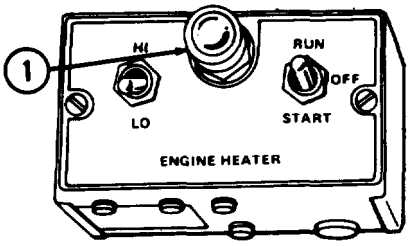


**NOTE**

Blower motor will continue to run for approximately 1 to 3 minutes after fuel is shut off, until heater is purged, and heater exchanger has cooled. Then blower motor will stop and indicator lamp (1) will go out.

(15) During arctic operations, heater coolant shutoff valves should remain open at all times.

(16) Remain in vehicle cab to make sure indicator lamp(1) goes out and blower motor shuts down.

(17) Move battery switch lever (2) to OFF position after indicator lamp (1) goes out and blower motor stops.

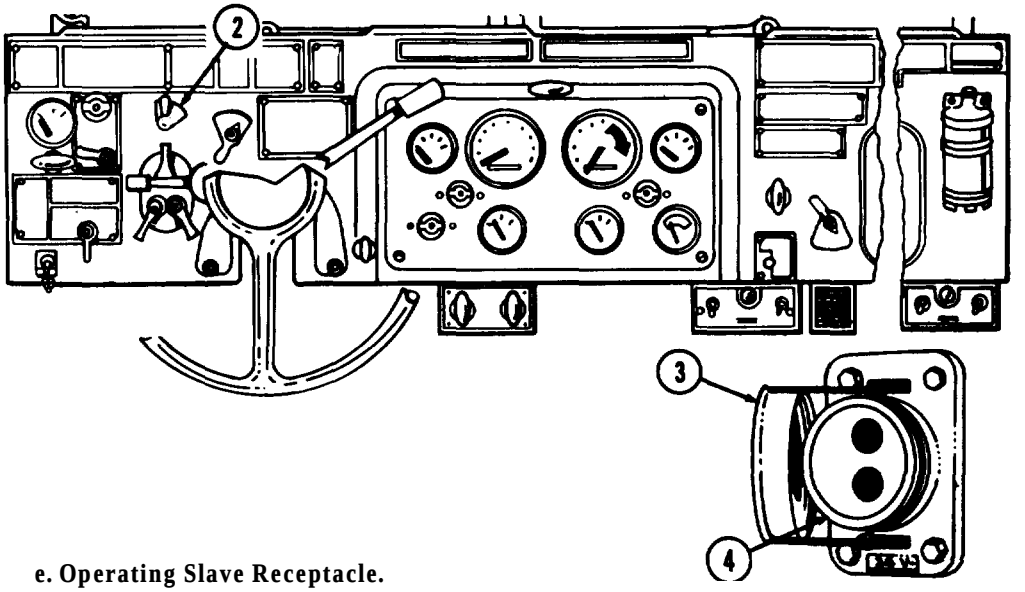


**e. Operating Slave Receptacle.**

(1) Slave receptacle (4) is mounted on right rear side of vehicle cab. It is standard on medium and tractor wrecker models.

(2) Cover (3) is unscrewed and swung to one side for service operations.

(3) Refer to paragraph 2-18 for procedures using slave receptacle to start vehicle.

TA 094445

## 2-44. OPERATING A-FRAME KIT

**a. General.** The A-frame kit is installed on vehicles with front winches to provide a means for lifting, moving, and lowering material when standard cranes are not available. A-frame load capacity is 3,000 pounds (1,362 kilograms).

**b. Safety Precautions.** When using an A-frame assembly, the operator should be aware of the following operating instructions for personnel safety and maintaining equipment in operating condition:

(1) Do not overload A-frame [maximum load: 3,000 pounds (1,362 kilograms)].

(2) Do not drop poles below 60 degree angle with ground surface.

(3) Do not allow load to swing.

(4) Be aware of overhead obstacles and avoid hitting them.

(5) Prevent cable kinking and twisting.

(6) Do not use winch cable to tie load.

c. Preparation for Use.

**WARNING**

Vehicle will become charged with electricity if A-frame contacts or breaks high voltage wire. Do not leave vehicle while high voltage line is in contact with A-frame or vehicle. Serious personnel injury can result. Signal nearby personnel to have electrical power turned off.

**NOTE**

A-frame kit is installed and rigged by organizational maintenance personnel.

(1) Maneuver vehicle into position for operation. Be careful that A-frame does not come into contact with wires, cables, tree limbs, or other overhead obstructions.

(2) Park vehicle and apply parking brake.

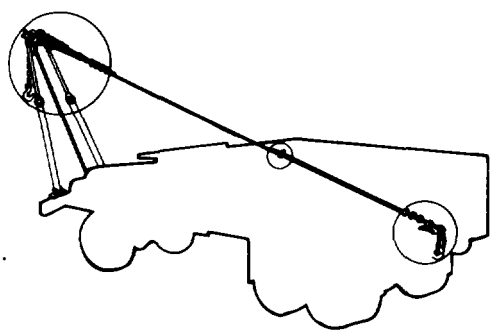

**WARNING**

Do not attempt to lift more than 3,000 pounds (1,362 kilograms) with A-frame kit.

**d. Operating Frame.** Operate front winch to raise, lower, or hold load. Refer to paragraph 2-22 for front winch operating instructions.

TA 094446

## 2-45. OPERATING WINDSHIELD WASHER KIT

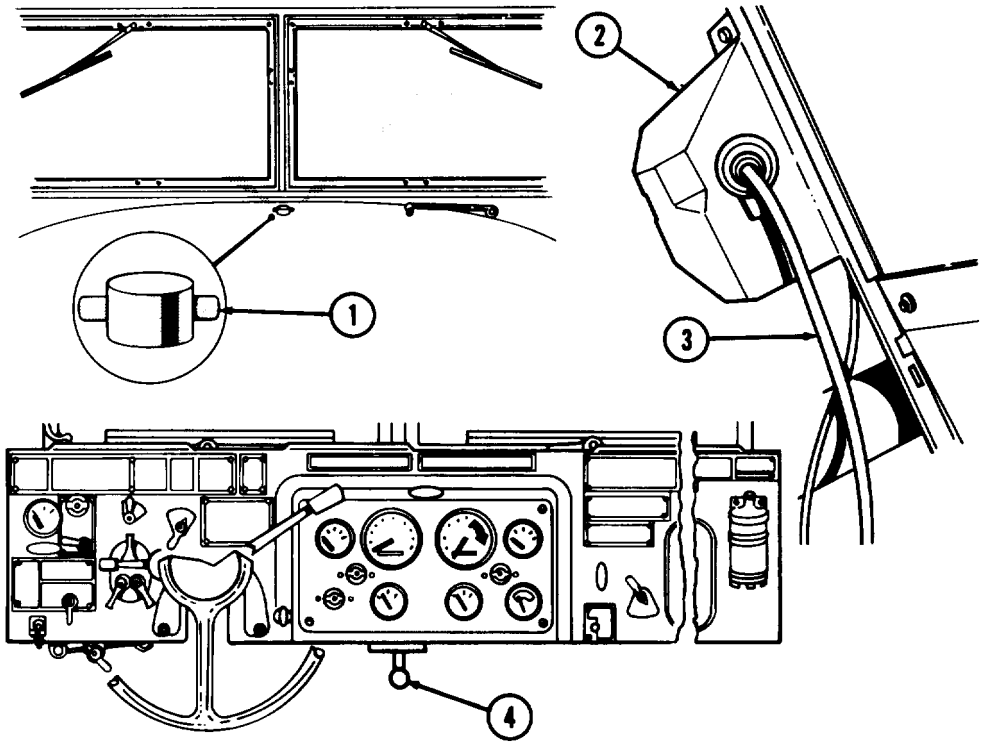


**a. General.** The windshield washer kit includes a hand pump (4) mounted under the instrument panel, a fluid reservoir (2) on right side of engine compartment, necessary tubing (3), and supports. A single nozzle (1) in front of windshield has two openings; one for each windshield section.

**b. Operation.** Moving hand pump handle (4) up and down pumps fluid from the reservoir (2) through tubing (3) to the nozzle (1). The fluid washes both halves of windshield.

**NOTE**

Reservoirs (2) on vehicles so equipped should be checked and washer fluid added as required.

## 2-46. TROOP SEAT KIT

**a. General.** The troop seat kit is used to convert M817 dump trucks into troop carriers. Troop seat kit also enables dump trucks to transport bulk cargo that would otherwise extend above dump body.

TA 094447

**b. Troop Seat Kit Installation.**

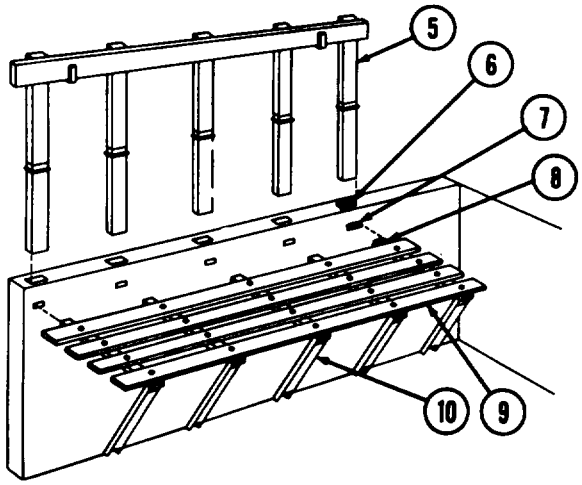


(1) Insert side racks (5) into slots (6) on dump body side walls.

(2) Fold out troop seat support legs (10). Lay troop seat (9) flat on floor of dump body.

**NOTE**

This operation requires two crewmembers.

(3) Raise troop seat (9) level with slots (7) on dump body sides. Insert troop seat engaging hooks (8) into slots, fold support legs (10) inward, and lower troop seat into position.

(4) Adjust each troop seat support leg (10) until all supports evenly contact side and floor of truck.

(5) Secure safety strap (12) to eyelets (11) on side rack ends.

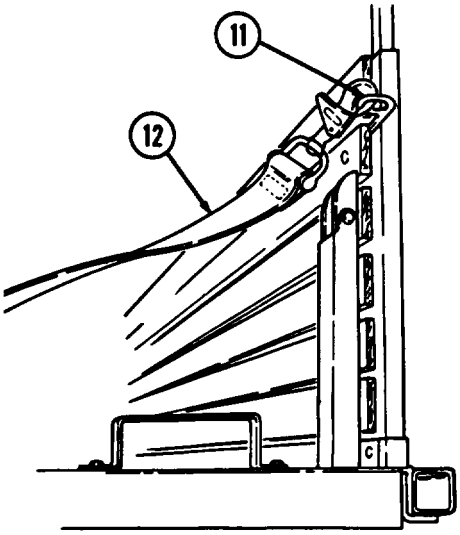


TA 094448

## 2-47. AIRBRAKE HAND CONTROL KIT

**a. General.** The airbrake control kit is installed on vehicles hauling trailers or artillery equipped with airbrakes. Airbrake kit is installed by direct support maintenance personnel.

**b. Airbrake Kit Operation.**

(1) Insert lunette yoke (5) of trailer or artillery load into pintle hook (2) of vehicle.

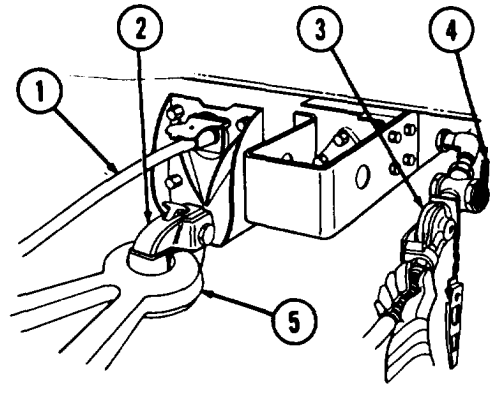


**NOTE**

Inserting yoke of trailer or artillery piece requires two or more crewmembers, depending on size and weight of load.

(2) Connect air lines ( 10) and ( 12) attached to towed load to half couplings (3) and (13) of towing truck.

**WARNING**

Failure to turn on air shutoff valves will result in loss of brakes on towed vehicle. This may cause injury to personnel.

(3) Pull up valve handles (4) and (14) to open airbrake hose lines.

(4) Connect trailer brake light cable (1) to electric receptacle (15) above pintle hook.

(5) Start vehicle engine (refer to paragraphs 2-12 and 2-13).

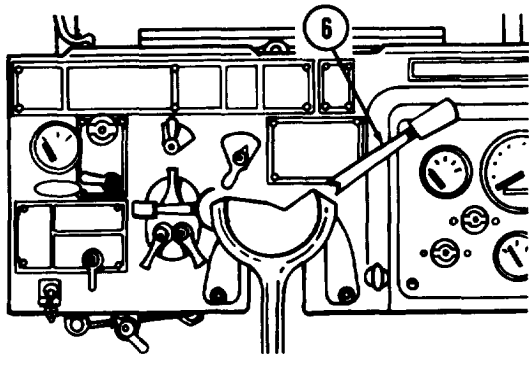


**NOTE**

Airbrake control should be engaged slowly to provide steady, even braking.

(6) Pull down trailer airbrake hand control (6) to apply brakes of towed load.

TA 094449

## 2-48. AIRBRAKE HOSE CONNECTIONS FOR TOWING TRAILERS

**a. General.** Proper brake air hose connections are required for safe operation of towing vehicles and trailers.

**b. Coupling Trailer to Vehicle.**

**NOTE**

Refer to appropriate trailer TM for complete trailer operation procedures.

(1) Remove safety pin (7), raise latch (8), and open pintle hook lock (9).

(2) Back up vehicle until trailer lunette (5) can be lowered onto pintle hook (2).

**WARNING**

Make sure safety pin has been properly installed and secured in pintle before proceeding with mission. Failure to comply may result in injury to personnel or damage to equipment.

(3) Lower lunette yoke (5) onto pintle hook (2), close pintle hook lock (9), close latch (8), and replace safety pin (7).

(4) Cross and secure safety chains (11) to vehicle.

**NOTE**

Location of service air coupling (13), emergency air coupling (3), and trailer electrical receptacle (15), may vary due to model of vehicle.

(5) Connect intervehicular service brake air hose (12), emergency brake air hose (10). and electrical cable (1).

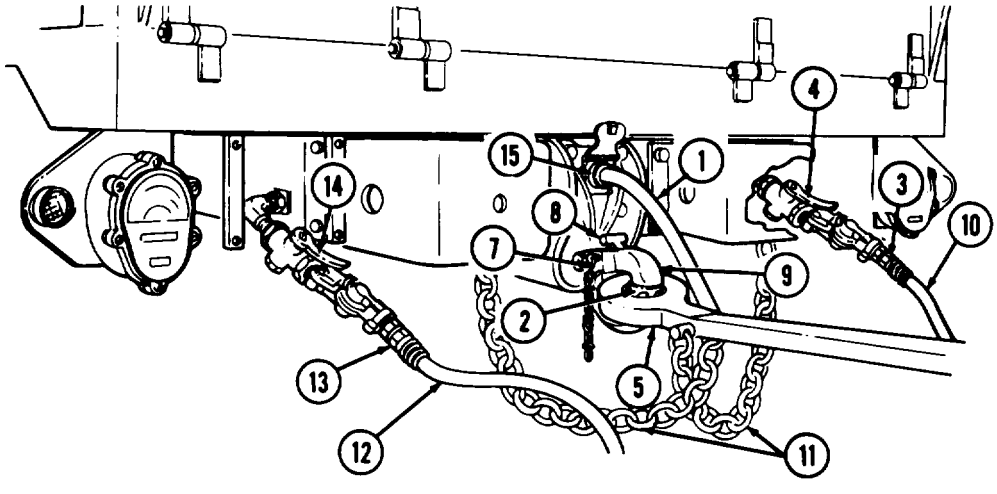


**WARNING**

Failure to turn on air shutoff valves (4) and (14) will result in loss of brakes on trailer. This may cause injury to personnel.

(6) Turn on both service (14) and emergency (4) brakes air shutoff valves.

(7) Check operation of trailer brakes and lights.

TA 094450

**c. Uncoupling Trailer from Vehicle.**

(1) Park trailer and apply vehicle parking brake.

**WARNING**

Failure to completely turn off air shutoff valves (1) and (4) will result in loss of vehicle brakes. This may cause injury to personnel.

(2) Completely turn off both service brake air shutoff valve (1) and emergency brake air shutoff valve (4).

(3) Disconnect intervehicular service brake hose (8), emergency brake hose (5), electrical cable (2), and safety chains (6).

(4) Remove safety pin (10) and open pintle hook lock (3).

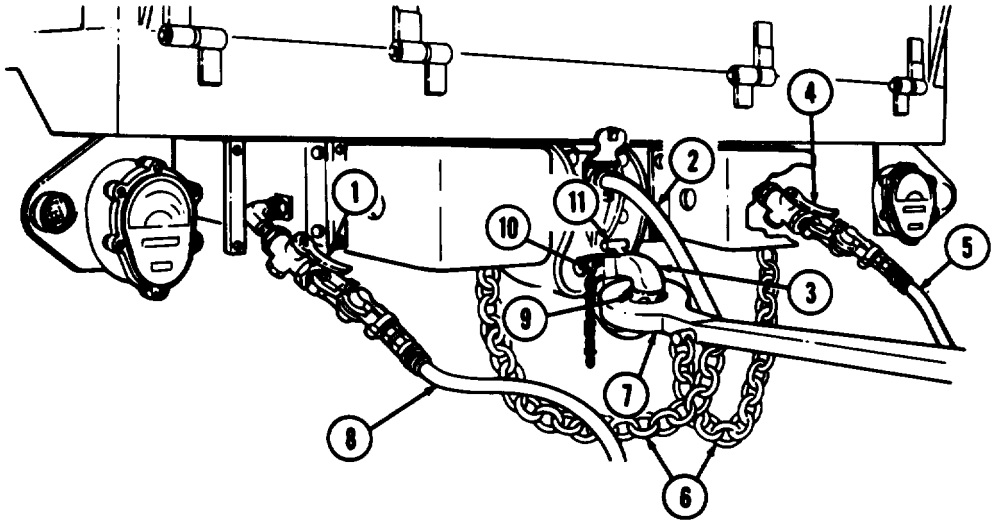


(5) Disconnect lunette yoke (7) from pintle hook (9).

(6) Close pintle hook lock (3), close latch (11) and install safety pin (10).

TA 094451

# CHAPTER 3

# MAINTENANCE INSTRUCTIONS

## Section I. TOOLS AND EQUIPMENT

### 3-1. SPECIAL TOOLS AND EQUIPMENT

Special tools and test equipment are not required by the operator for maintenance of M809 series vehicles.

### 3-2. BASIC ISSUE ITEMS

Tools, equipment, and accessories issued with or prescribed for use by the operator of M809 series vehicles are listed in the basic issue items list in appendix B of this manual.

### 3-3. EXPENDABLE/DURABLE SUPPLIES AND MATERIALS

Supplies and materials required for operation and maintenance of the equipment covered in this manual are listed in appendix D.

## Section II. LUBRICATION

### 3-4. LUBRICATION ORDER

Lubrication order LO 9-2320-260-12 designates lubricating instructions for M809 series vehicles. This document is issued with each vehicle and is carried in vehicle at all times. A damaged or lost lubrication order should be replaced immediately.

### 3-5. GENERAL LUBRICATION INSTRUCTIONS

**a. Service Intervals.** Service intervals on the lubrication order are for normal operation under moderate climate conditions.

**b. Application Points.** Wipe clean lubricating fittings and surrounding surfaces before and after applying lubricant.

**c. Reports and Records.** Maintain vehicle lubrication record on DA Form 2408-L in Equipment Daily Log Book.

TA 094452

## 3-6. GENERAL LUBRICATING INSTRUCTIONS UNDER UNUSUAL CONDITIONS

**a. Service Intervals.** Increase frequency of lubricating service when operating under abnormal conditions such as high or low temperatures, prolonged high-speed driving, or extended cross-country operations. Such operations can destroy a lubricant's protective qualities. More frequent lubricating service intervals are necessary to maintain vehicle readiness when operating under abnormal conditions. During inactive periods, service intervals can be extended with adequate preservation.

**b. Changing Lubricant Grade.** Lubricant grades change with weather conditions. Refer to LO 9-2320-260-12 for lubricant grade changes for the following temperature ranges:

(1) +15° F (-9°C) and above.
(2) +40° F to -15° F (+4°C to -26°C)
(3) +40° F to -65° F (+4°C to -54°C)

**c. Maintaining Lubricant Levels.** Lubricant levels must be checked as specified in LO 9-2320-260-12. Steps must be taken to replenish and maintain operating levels.

## 3-7. LUBRICATION FOR CONTINUED OPERATION BELOW 0°F (-17°C)

See FM 9-207, Operation and Maintenance of Ordinance Materiel in Cold Weather 0°F to -65° F (-17° C to -54° C).

TA 094453

# Section III. TROUBLESHOOTING

## 3-8. GENERAL

The troubleshooting table contains instructions that will help the operator identify and correct simple vehicle malfunctions during operations. The table also helps the operator identify major mechanical difficulties that must be referred to organizational maintenance. The listing of possible malfunctions come under major vehicle headings.

## 3-9. TROUBLESHOOTING PROCEDURES

Under these major headings are the malfunctions and the corrective action.

- Engine
- Transmission
- Transfer Case
- Clutch
- Brakes
- Wheels and Tires
- Steering
- Heating System
- Front and Midships Winch
- Hydraulic Crane
- Rear Winch
- Dump Body Hoist
- Fifth Wheel
- Expansible Vans
- Deep Water Fording Kit
- Arctic Winterization Kit
- A-Frame Kit
- Slave Receptacle
- Windshield Washer Kit

**NOTE**

- Operators should perform the corrective action in the order listed.
- This manual cannot list all malfunctions that may occur. If a malfunction occurs that is not listed in this table, notify your supervisor.
- If malfunction corrective action does not correct malfunction, notify your supervisor.

TA 094454

**Table 3-1. Troubleshooting**

| MALFUNCTION<br>TEST OR INSPECTION<br>CORRECTIVE ACTION |
|---|
| **ENGINE** |
| 1. WHEN STARTER SWITCH IS TURNED TO START, ENGINE FAILS TO CRANK OR CRANKS SLOWLY. |
| Step 1. Check to see if battery switch is off.<br>Turn switch on. |
| Step 2. Visually check to see if battery cables are loose, broken, or corroded. Visually check battery terminals and connections for looseness damage, and corrosion. Check battery for proper water level.<br>Notify organizational maintenance if water is to be added and of any damage to batteries, cables, and terminals. |
| 2. ENGINE CRANKS BUT DOES NOT START. |
| **NOTE**<br>Do not completely fill fuel tank(s) before checking visually for leaks in fuel system. |
| Step 1. Check to see if emergency engine stop control is partially pulled out.<br>If control is pulled out, notify organizational maintenance to check out emergency shut down conditions before trying to start engine. |
| Step 2. Check to see if fuel gage indicates empty.<br>Fill fuel tank(s). |
| **NOTE**<br>Whenever fuel tank(s) are completely drained and then refilled, the fuel system must be purged of air (refer to paragraph 3-11f.). |
| 3. ENGINE CRANKS BUT FAILS TO START AT OUTSIDE TEMPERATURES BELOW 0°F (-17°C). |
| Step 1. Perform steps 1 and 2 of malfunction 2. |
| Step 2. See if glow plug is energized.<br>If not energized, turn the glow plug switch on. |
| 4. ENGINE STARTS BUT MISFIRES, RUNS ROUGH, OR LACKS POWER. |
| Step 1. Check operation of glow plug and hand pump.<br>Turn on glow plug switch and operate hand pump. |
| Step 2. Check to see if emergency engine stop control is partially pulled out.<br>If control is pulled out, notify organizational maintenance to check out emergency shut down conditions before trying to start engine. |
| Step 3. Check fuel supply system for water and impurities.<br>Drain fuel filter into a container until fuel is clear (refer to paragraph 3-11e.). If complete draining is required to obtain clear fuel, notify organizational maintenance to check fuel tank(s) for contamination. |
| 5. ENGINE OVERHEATS ACCORDING TO ENGINE COOLANT TEMPERATURE GAGE. |
| Step 1. Check coolant level in surge tank.<br>Add coolant to surge tank until at least 3/4 full. Check for leakage from tank and hoses. If leaking, notify organizational maintenance. |
| Step 2. Check radiator core for obstructions.<br>If clogged, remove debris (see cleaning instructions table 2-1). |

TA 094455

**Table 3-1. Troubleshooting**

| MALFUNCTION<br>TEST OR INSPECTION<br>CORRECTIVE ACTION |
|---|
| Step 3. Check engine oil level.<br>If low, add oil. (Refer to LO 9-2320-260-12.) |
| 6. LOW ENGINE OIL PRESSURE<br>Check engine oil level.<br>If low, add oil. (Refer to LO 9-2320-260-12.) |
| 7. EXCESSIVE ENGINE OIL CONSUMPTION.<br>Notify organizational maintenance. |
| 8. EXCESSIVE EXHAUST SMOKE.<br>Check for restricted air cleaner.<br>If restricted, clean air cleaner element (refer to paragraph 3-11g.). |
| **TRANSMISSION** |
| 9. NO RESPONSE TO GEAR SHIFT LEVER MOVEMENT.<br>Notify organizational maintenance. |
| 10. ROUGH SHIFTING<br>Notify organizational maintenance. |
| 11. LUBRICANT LEAKAGE.<br>Check for loose drainplug.<br>Tighten drainplug. |
| **TRANSFER CASE** |
| 12. TRANSFER SELECTOR LEVER WILL NOT SHIFT OR SLIPS OUT OF GEAR.<br>Notify organizational maintenance. |
| 13. LUBRICANT LEAKAGE.<br>Check for loose drainplugs.<br>Tighten loose drainplugs. |
| **CLUTCH** |
| 14. VEHICLE MOVES WITH CLUTCH PEDAL DEPRESSED.<br>Notify organizational maintenance. |
| 15. HARD OR UNABLE TO ENGAGE OR DISENGAGE TRANSMISSION GEARS WITH CLUTCH PEDAL DEPRESSED.<br>Notify organizational maintenance. |
| **BRAKES** |
| 16. BRAKE PEDAL DEPRESSES TO FLOORBOARD.<br>Notify organizational maintenance. |
| 17. TRUCK PULLS TO ONE SIDE DURING BRAKING.<br>Check air pressure in tires.<br>Inflate or deflate tires to correct air pressure. See table 1-4. |
| 18. BUZZER SOUNDS CONTINUOUSLY, AIR PRESSURE DOES NOT EXCEED 60 PSI (413.8 kPa).<br>Step 1. Check for open or loose air reservoir draincock. Close or tighten air reservoir draincock. |

TA 094456

**Table 3-1. Troubleshooting( Cont'd)**

| MALFUNCTION<br>TEST OR INSPECTION<br>CORRECTIVE ACTION |
|---|
| Step 2. Check front air coupling shutoff valves. Close front air coupling shutoff valves if open. |
| Step 3. Check rear air coupling shutoff valves. Close rear air coupling shutoff valves if open. |
| Step 4. Check trailer air coupling shutoff valves (M818 and M819 only). |
| Close trailer air coupling shutoff valves if open. |
| 19. TRAILER BRAKES DO NOT FUNCTION WHEN BRAKE PEDAL IS DEPRESSED OR HAND CONTROL LEVER IS USED (M818 AND M819 ONLY). |
| Step 1. Check trailer air coupling shutoff valve. |
| Open trailer air coupling shutoff valves if closed. |
| Step 2. Check for loose tractor-to-trailer hose connections and for air leaks. |
| Tighten leaking or loose tractor-to-trailer hose connections. |
| 20. PARKING BRAKE DOES NOT HOLD VEHICLE ON 45 DEGREE INCLINE. |
| Step 1. Check parking brake lever position. |
| If partially applied, pull parking brake lever all the way up. |
| Step 2. Check lever adjustment. |
| Turn knob on end of lever clockwise to increase braking action; counterclockwise to decrease braking action. |
| 21. PARKING BRAKE DRAGS OR OVERHEATS. |
| Check parking brake lever position. |
| If partially applied, release parking brake. |
| **WHEELS AND TIRES** |
| 22. WHEEL WOBBLES OR SHIMMIES. |
| Check for loose wheel stud nuts. |
| Tighten loose wheel stud nuts using wheel stud nut wrench and handle. |
| Notify organizational maintenance to retighten to proper torque. |
| 23. EXCESSIVE OR UNEVEN TIRE WEAR. |
| Check air pressure in tires. |
| Inflate or deflate tires to correct air pressure. (See table 1-4.) |
| 24. VEHICLE WANDERS OR PULLS TO ONE SIDE ON LEVEL PAVEMENT. |
| Check air pressure in tires. |
| Inflate or deflate tires to correct air pressure. (See table 1-4.) |
| **STEERING** |
| 25. HARD STEERING. |
| Step 1. Check tire air pressure. |
| Inflate or deflate tires to correct air pressure. (See table 1-4.) |
| Step 2. Check power steering reservoir oil level. |
| If low, add proper oil to FULL mark on dipstick (refer to paragraph 3-11d). |
| 26. OIL LEAKS. |
| Notify organizational maintenance. |

TA 094457

**Table 3-1. Troubleshooting (Cont'd)**

| MALFUNCTION<br>TEST OR INSPECTION<br>CORRECTIVE ACTION |
|---|
| **HEATING SYSTEM** |
| 27. HOT WATER PERSONNEL HEATER FAILS TO PRODUCE HEAT AFTER ENGINE REACHES OPERATING TEMPERATURE. |
| Step 1. Check to see if blower motor switch is in OFF position.<br>Place blower motor switch in HI or LOW position. |
| Step 2. Check to see if heat vent control is open.<br>Open heat vent control. |
| Step 3. Check to see if coolant shutoff cocks are closed. (Refer to paragraph 2-42.)<br>Open coolant shutoff cocks. |
| Step 4. Check for air in heater.<br>With engine running, open air bleed draincock on engine side of heater and allow air to escape. Close draincock. |
| 28. HEATER BLOWER MOTOR OPERATES BUT HEAT FAILS TO REACH CAB OR DEFROSTERS FAIL TO OPERATE. |
| Check to see if heat vent control and/or defroster control levers are adjusted properly.<br>Adjust heat vent control or defroster control levers to direct heat flow to desired location. (Refer to paragraph 2-42.) |
| **SPECIAL BODY EQUIPMENT:<br>FRONT WINCH AND MIDSHIPS WINCHES (M815)** |
| 29. WINCH DRUM DOES NOT TURN. |
| Step 1. Check to see if power takeoff is engaged.<br>If not, engage power takeoff. |
| Step 2. Check for broken propeller shaft shear pin.<br>Replace shear pin if broken. |
| Step 3. Check to see if winch clutch lever is released. Engage clutch lever. |
| 30. WINCH DRUM DOES NOT TURN FREELY WHEN PULLING OUT CABLE. |
| Step 1. Check to see if drum lock knob is engaged.<br>Pull out drum lock knob, rotate 90 degrees, and release. (Refer to paragraph 2-22.) |
| Step 2. On vehicles with level wind device, check to see if level wind lock knob and cable tensioner lock knob and lever are engaged.<br>Release level wind lock knob and cable tensioner lock knob and lever. |
| **HYDRAULIC CRANE** |
| 31. LACK OF POWER. |
| Step 1. Check level of hydraulic oil in reservoir.<br>If low, add oil to proper level. (Refer to LO 9-2320-260-12.) |
| Step 2. Check for hydraulic leaks.<br>If leaks are found, notify organizational maintenance. |
| Step 3. See if supply valve is fully open.<br>Open valve completely. |

TA 094458

**Table 3-1. Troubleshooting (Cont'd)**

| MALFUNCTION<br>TEST OR INSPECTION<br>CORRECTIVE ACTION |
|---|
| Step 4. Check transmission gearshift.<br>Be sure transmission gearshift is engaged. |
| Step 5. Check to see if tachometer indicates 1250 rpm.<br>If not, adjust hand throttle control so engine idle speed is set at 1250 ± 50 rpm. |
| Step 6. Check to see if transfer power takeoff is engaged.<br>If not, engage transfer power takeoff. |
| 32. CRANE DOES NOT LIFT. |
| Step 1. Check level of hydraulic oil in reservoir.<br>If low, add oil to proper level. (Refer to LO 9-2320-260-12.) |
| Step 2. Check for hydraulic leaks.<br>If leaks are found, notify organizational maintenance. |
| 33. HYDRAULIC PUMP NOISY. |
| Check level of hydraulic oil in reservoir.<br>If low, add oil to proper level. (Refer to LO 9-2320-260-12.) |
| **REAR WINCH** |
| 34. WINCH FAILS TO OPERATE OR LACKS POWER. |
| Step 1. Check to see if power takeoff is engaged.<br>If not, engage power takeoff. |
| Step 2. Check to see if power divider is engaged.<br>If not, engage power divider. |
| Step 3. Check to see if level wind lock knob is released.<br>If not, release level wind lock knob. |
| Step 4. Check to see if cable tensioner switch is down to engaged position for winding operation.<br>If not, pull cable tensioner switch down to engage tensioner for winding operation. |
| Step 5. Check for broken propeller shaft shear pin.<br>Replace shear pin if broken. |
| **DUMP BODY HOIST** |
| 35. HOIST DOES NOT LIFT DUMP BODY. |
| Step 1. Check to see if power takeoff is engaged.<br>If not, engage power takeoff. |
| Step 2. Check to see if dump body control lever is pulled back to RAISE position.<br>If not, pull lever back to RAISE position. |
| Step 3. Check level of hydraulic oil in reservoir.<br>If low, add oil to proper level. (Refer to LO 9-2320-260-12.) |
| Step 4. Check for hydraulic leaks.<br>If leaks are found, notify organizational maintenance. |
| 36. BODY RAISES TO FULL DUMP BUT DOES NOT POWER DOWN. |
| Check to see if dump body control lever is pushed full forward to LOWER position.<br>If not, push lever full forward to LOWER position. |

TA 094459

**Table 3-1. Troubleshooting (Con'd)**

| MALFUNCTION<br>TEST OR INSPECTION<br>CORRECTIVE ACTION |
|---|
| 37. HYDRAULIC PUMP NOISY. |
| Check level of hydraulic oil in reservoir. |
| If low, add oil to proper level. (Refer to LO 9-2320-260-12.) |
| 38. TAILGATE DOES NOT OPEN. |
| Step 1. Check to see if tailgate control rod is pulled forward, and down to unlock tailgate. |
| If not, pull tailgate control rod forward and down to unlock tailgate. |
| Step 2. Check to see if tailgate chains are restricting tailgate from opening. |
| Reposition tailgate chains so they will not restrict opening of tailgate. |
| **FIFTH WHEEL** |
| 39. FIFTH WHEEL NOT OPERATING. |
| Check lubrication. |
| Lubricate as necessary (refer to LO 9-2320-260-12). |
| **EXPANSIBLE VANS** |
| 40. POWER LIFTGATE DOES NOT OPERATE OR LACKS POWER. |
| Step 1. Check to see if transfer power takeoff is in the ENGAGED position. |
| If not, place transfer power takeoff in the ENGAGED position. |
| Step 2. Check to see if tachometer indicates 1000 to 1200 rpm. |
| If not, adjust hand throttle control so engine idle speed is set at 1000 to 1200 rpm. |
| Step 3. Check level of hydraulic oil in liftgate reservoir with platform lowered to ground. |
| Oil tank should be half full. If not, fill to proper oil level (refer to LO 9-2320-260-12). |
| Step 4. Check for hydraulic oil leaks. |
| If leaks are found, notify organizational maintenance. |
| Step 5. Check outside power cable for secure connections if liftgate is powered from outside electrical source. |
| Connect power cable securely to power entrance receptacle and power source. |
| 41. VAN BODY NOT WATERPROOF OR LIGHT SHINES THROUGH GAPS AT SIDE PANEL. |
| Step 1. Check toggle clamps at side panels. (Refer to paragraph 2-29e.) |
| If toggle clamp does not draw top of side panel tight enough, loosen locknut on toggle clamp eyebolt. Screw eyebolt inward to close the gap. Tighten locknut. |
| Step 2. Check lip of block seal at inner rear corner of hinged roof. |
| If lip is forced out of position, move side panel out to disengage corner block seal. Push seal lip up into correct position so end panel door properly engages seal when side pane is retracted. |
| Step 3. Check to see if roof is properly seated. |
| If not, loosen toggle clamp and push up on hinged roof and put on end panels while reclosing toggle clamps to ensure seal alinement. |
| Step 4. Check to see if blackout panels are closed properly. |
| If not, slide up blackout panels on van sides and rear doors until they latch in closed position. |

TA 094460

**Table 3-1. Troubleshooting (Cont'd)**

| MALFUNCTION<br>TEST OR INSPECTION<br>CORRECTIVE ACTION | |
|---|---|
| 42. CEILING LIGHTS AND SERVICE RECEPTACLES FAIL TO ENERGIZE WHEN DOORS ARE CLOSED UNDER BLACKOUT CONDITIONS. | |
| Step 1. | Check to see if blackout circuit switch and/or main circuit breaker switches are turned off. (Refer to paragraph 2-29i.)<br>Turn on switches. |
| Step 2. | Check to see if blackout switch is turned off. (Refer to paragraph 2-29i.)<br>Turn on blackout switch. |
| Step 3. | Check outside power cable for secure connections if electrical power is supplied from outside source.<br>Connect power cable securely to power entrance receptacle and power source. |
| 43. EMERGENCY LIGHT, BLACKOUT LIGHT, AND CEILING LIGHTS FAIL TO ILLUMINATE. | |
| Step 1. | Check to see if main circuit breaker and/or light switches are turned off.<br>Turn on main circuit breaker or light switches. |
| Step 2. | Check outside power cable for secure connections if electrical power is supplied from outside source.<br>Connect power cable securely to power entrance receptacle and power source. |
| 44. VAN HEATER WILL NOT IGNITE | |
| Step 1. | Check to see if main circuit breaker and/or heater switches are turned off. (Refer to paragraph 2-29g.)<br>Turn on main circuit breaker or heater switches. |
| Step 2. | Check to see if thermostat is set to desired temperature.<br>If not, set thermostat to desired temperature. |
| Step 3. | Check for closed fuel pump shutoff valve (refer to paragraph 2-29g).<br>If closed, open shutoff valve. |
| Step 4. | Check fuel level on fuel gage.<br>Fill fuel tank as necessary. |
| Step 5. | For electrically powered right heater only, check outside power cable for secure connections if electrical power is supplied from outside source.<br>Connect power cable securely to power entrance receptacle and power source. |
| 45. HEATER STOPS OPERATING. | |
| | Check fuel level.<br>Add fuel to truck fuel tank, as required. |
| 46. AIR CONDITIONER COMPRESSOR FAILS TO START. | |
| Step 1. | Check to see if bonnet door is closed. (Refer to paragraph 2-29h.)<br>Push bonnet door control rod forward to open bonnet door. |
| Step 2. | Check to see if main circuit breaker and/or air conditioner switches in circuit breaker box are turned off.<br>Turn on main circuit breaker or air conditioner switches. |
| Step 3. | Check to see if power input switch and/or compressor circuit breaker are turned off.<br>Turn on power input switch or compressor circuit breaker. |
| Step 4. | Check to see if compressor switch is turned to HIGH when starting air conditioner.<br>If not, turn compressor switch to HIGH when starting air conditioner. |

TA 094461

**Table 3-1. Troubleshooting (Cont'd)**

| MALFUNCTION<br>TEST OR INSPECTION<br>CORRECTIVE ACTION |
|---|
| **SPECIAL PURPOSE KITS:**<br>**DEEP WATER FORDING KIT** |
| 47. FORDING CONTROL HANDLE INOPERATIVE. |
| Step 1. Check to see if wire is not attached to fording control valve.<br>If not attached, notify organizational maintenance. |
| Step 2. Check to see if wire is kinked.<br>If kinked, notify organizational maintenance. |
| **ARCTIC WINTERIZATION KIT** |
| 48. ENGINE FAILS TO REACH OPERATING TEMPERATURE |
| Check to see if radiator cover flap is opened. (Refer to paragraph 2-43b.)<br>Roll cover flap down and secure. |
| 49. ENGINE TEMPERATURE APPROACHES 195°F (90°C). |
| Step 1. Check to see if radiator cover flap is closed. (Refer to paragraph 2-43b.)<br>Roll up cover flap and secure. |
| Step 2. Check coolant level in surge tank.<br>Add coolant to surge tank until at least 3/4 full. Check for leakage from tank and hoses. leaking, notify organizational maintenance. |
| 50. FUEL BURNING PERSONNEL HEATER FAILS TO START WHEN RUN-OFF-START SWITCH IS HELD IN START POSITION. |
| **WARNING**<br>Exhaust gases can kill. Do not operate engine coolant heater in closed area occupied by personnel. |
| **NOTE**<br>Heater will not operate if RUN-OFF-START switch is moved to RUN position before indicator lamp lights up. |
| Step 1. Check if engine is running.<br>If not, start engine. |
| Step 2. Check fuel level on fuel gage.<br>Fill fuel tank(s) if necessary. |
| Step 3. See if emergency switch is in OFF position.<br>Turn switch to ON position. |
| Step 4. Check to see if electric fuel pump shutoff valve is closed. Open valve. (Refer to paragraph 2-43c.) |
| Step 5. Depress PRESS-TO-TEST button on heater control box to check operation of circuit.<br>If indicator lamp does not light up, notify organizational maintenance. |
| Step 6. Check to see if HI-LO switch on heater control box is set to HI position.<br>Set HI-LO switch to HI position. |

TA 094462

**Table 3-1. Troubleshooting (Cont'd)**

| MALFUNCTION<br>TEST OR INSPECTION<br>CORRECTIVE ACTION |
|---|
| 51. ENGINE COOLANT HEATER FAILS TO START WHEN RUN-OFF-START SWITCH IS HELD IN START POSITION. |
| **WARNING**<br>Exhaust gases can kill. Do not operate engine coolant heater in closed area occupied by personnel. |
| **CAUTION**<br>Do not operate the engine coolant heater and personnel heater at the same time. |
| **NOTE**<br>Heater will not operate if RUN-OFF-START switch is moved to RUN position before indicator lamp lights up. |
| Step 1. Check to see if battery switch is in OFF position.<br>Turn battery switch to ON position. |
| Step 2. Check fuel level on fuel gage.<br>Fill fuel tank(s) if necessary. |
| Step 3. Check to see if heater fuel shutoff valve, located in battery box, and electric fuel pump shutoff valve, located near air cleaner assembly, are closed. (Refer to paragraph 2-43d.)<br>Open both fuel shutoff valves. |
| Step 4. Depress PRESS-TO-TEST button on heater control box to check operation of circuit.<br>If indicator lamp does not light up, notify organizational maintenance. |
| Step 5. Check to see if HI-LO switch on heater control box is set to HI or LO position.<br>Set HI-LO switch to HI or LO position. |
| **NOTE**<br>Select HI position if engine is cold. Select LO position if engine is already well heated. Switch will automatically change to LO position when coolant temperature exceeds 195°F (90°C). Switch will automatically change to HI position when coolant temperature drops below 120°F (48°C). |
| 52. EXCESSIVE ELAPSED TIME BEFORE HEATER IGNITION.<br>Check battery indicator gage.<br>If needle is not in green area, perform malfunction 1, step 2. If this does not correct problem, notify organizational maintenance. |
| 53. HEATER FAILS TO CONTINUE BURNING.<br>Check fuel level on fuel gage.<br>Fill fuel tank(s) if necessary. |
| 54. HEATER OUTPUT IS LOW.<br>Check if HI-LO switch is in LO position.<br>Set switch to HI position. |
| 55. WINDSHIELD DEFROSTERS NOT OPERATING. |
| Step 1. Check adjustment of defroster control handle.<br>Adjust defroster control handle. |
| Step 2. Check for restrictions in defroster deflectors.<br>Clear restriction. |

TA 094463

**Table 3-1. Troubleshooting (Cont'd)**

| MALFUNCTION<br>TEST OR INSPECTION<br>CORRECTIVE ACTION |
|---|
| 56. ENGINE OIL SHROUD NOT RECEIVING HEAT (ENGINE COOLANT HEATER ONLY). |
| Step 1. Check to see if coolant heater is operating. (Refer to paragraph 2-43.)<br>Start beater. If inoperative, notify organizational maintenance. |
| Step 2. Check to see if coolant heater exhaust tube is disconnected from oil pan shroud.<br>If disconnected, notify organizational maintenance. |
| 57. ENGINE COOLANT SYSTEM NOT RECEIVING HEAT (ENGINE COOLANT HEATER ONLY). |
| Step 1. Check to see if coolant heater is operating. (Refer to paragraph 2-43.)<br>Start heater. If inoperative, notify organizational maintenance. |
| Step 2. Check to see if one or more shutoff cocks are closed at engine or coolant heater.<br>Open coolant shutoff cock(s). |
| **A-FRAME KIT** |
| 58. WINCH INOPERATIVE. |
| Check winch.<br>See malfunction 29. |
| 59. A-FRAME INOPERATIVE OR MISALINED. |
| Step 1. Check to see if cable is secured in towing pintle.<br>If not, secure cable in towing pintle and lock pintle in closed position. |
| Step 2. Check for loose cable clamps and frays or breaks in cable.<br>If loose cable clamps and frays or breaks in cable, notify organizational maintenance. |
| Step 3. Check to see if A-frame is bent.<br>If A-frame is bent, notify organizational maintenance. |
| **SLAVE RECEPTACLE** |
| 60. SLAVE CABLE CONNECTED BUT ENGINE WILL NOT TURN OVER. |
| Step 1. Check for poor receptacle connection.<br>Make proper connection. |
| Step 2. Check if slave receptacle battery cables are loose or disconnected.<br>If loose or disconnected, notify organizational maintenance. |
| **WINDSHIELD WASHER KIT** |
| 61. WASHER INOPERATIVE. |
| Step 1. Check windshield washer fluid level in reservoir.<br>Fill as required. |
| Step 2. Look for broken, loose, or restricted tubing.<br>Notify organizational maintenance. |

TA 094464

## Section IV. MAINTENANCE PROCEDURES

**WARNING**

**HIGH INTENSITY NOISE**

Hearing protection is required for all personnel working in and around this vehicle with the engine running.

## 3-10. GENERAL

The operator/crew is responsible for preventive maintenance, checks and services listed in table 3-1 on preceding pages. Certain other maintenance services, also the responsibility of the operator/crew, are listed in this section.

## 3-11. ENGINE SERVICE

**a. General.** To perform engine service, hood must be unlatched and secured in opened position. After completing engine service, release hood, lower it to fixed position, and latch it. (Refer to paragraph 2-4.)

**b. Engine Crankcase Oil Level.**

**CAUTION**

Never operate engine with oil level below L (low) level mark or above H (high) level mark.

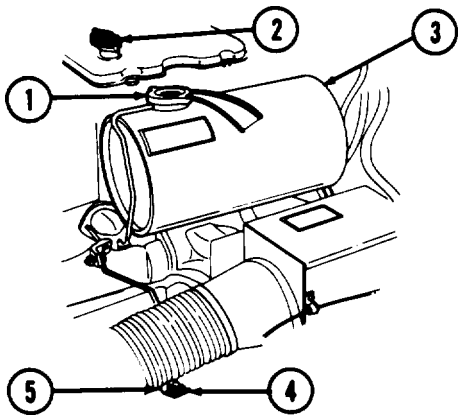


(1) Unlatch right hood panel and lower panel for access to oil level dipstick (4) located directly below coolant surge tank (3). Turn dipstick handle counterclockwise to free dipstick (4) from dipstick tube (5). Withdraw dipstick slowly to prevent a false reading. Keep oil level as near as possible to H (high) mark on dipstick, Seven quarts of engine oil are required to raise oil level from the L (low) mark to the H (high) mark on dipstick (4).

(2) If engine oil level is low, remove oil filler cap (2) and add engine oil as prescribed in LO 9-2320-260-12. Do not overfill. Replace oil filler cap (2, tighten cap securely, and wipe away any oil spilled.

(3) After checking or adjusting oil level, reinstall dipstick (4) in dipstick tube (5). Make sure dipstick (4) is seated in tube opening (5). Then tighten handle by turning it clockwise. Raise hood side panel and latch panel in closed position.

TA 094465

**c. Coolant Surge Tank.**

**WARNING**

Extreme care should be taken when removing surge tank filler cap (1) if temperature gage reads above 195° F (96° C). Do not add coolant to cooling system when engine is hot unless engine is running. Add coolant slowly. Injury to personnel can result.

(1) Remove coolant surge tank filler cap (1). Visually check coolant level. Surge tank (3) should be half full before operation; slightly above half full after operation.

(2) If it is necessary to adjust coolant level before operation, open draincocks on top of engine and radiator. Fill surge tank (3) half full, close both draincocks, and reinstall surge tank filler cap (1). Tighten cap securely.

(3) If it is necessary to add coolant during operation or after operation, follow WARNING procedure above.

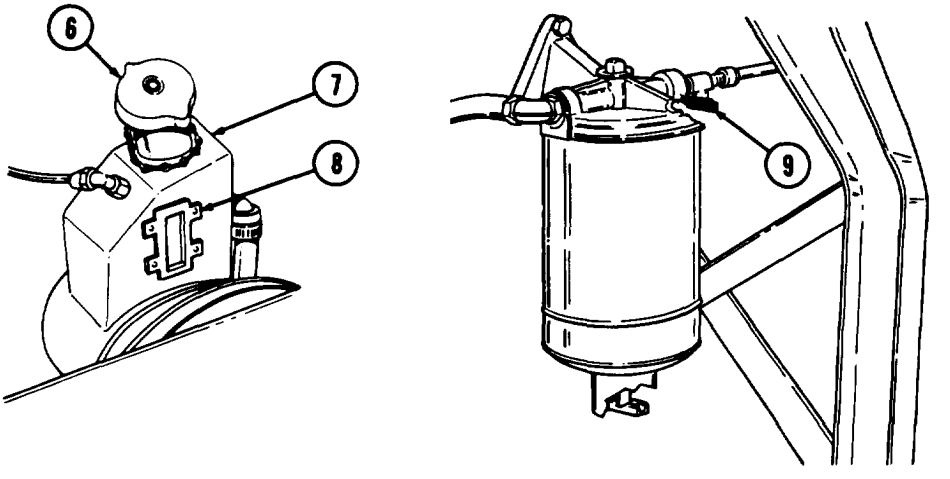


**d. Power Steering Oil Reservoir.**

(1) The hydraulic power steering reservoir (7) is on left side of engine near radiator. Check oil level visually through sight glass (8) or with dipstick on filler cap (6). Oil should be visible slightly above sight glass bottom before operation, or above L (low) mark on dipstick. Oil will be slightly higher after operation, but still visible in sight glass (8).

(2) If oil level is low, remove filler cap (6) and add oil as prescribed in LO 9-2320-260-12. Replace oil filler cap (6), tighten securely, and wipe away any spilled oil.

**e. Fuel Filter/Water Separator.**

(1) Service Operation.

(a) The combination fuel filter/water separator under left front fender requires daily maintenance, normally after operation. Two draincocks must be opened, drained, and then closed for service.

(b) Open fuel line inlet draincock (9), located near top of fuel filter/water separator.

TA 094466

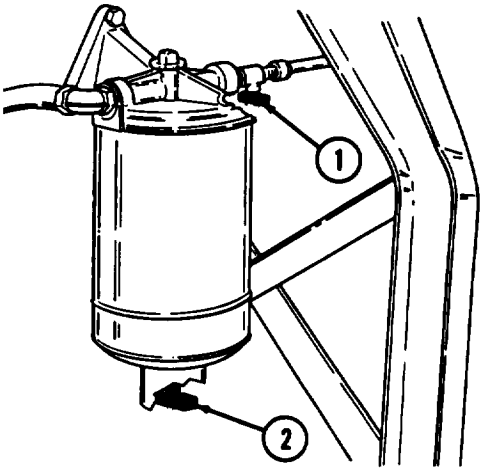


(c) Open draincock (2), at bottom of fuel filter/water separator, and allow approximately one pint (0.473 l) of liquid to drain off into a container.

(d) If you notice large amounts of water and/or impurities, you should allow one pint (0.473 l) fuel to drain until fuel is clear.

(e) If fuel tank(s) are found to be contaminated with water and/or impurities, complete draining will be necessary. This should be coordinated with organizational maintenance. The fuel filter/water separator element should also be serviced at this time, as required.

(f) After required service is completed, close draincock (1) at fuel inlet line and draincock (2) at bottom of fuel filter/water separator.

**f. Priming Fuel System.**

(1) It is necessary to prime the fuel system whenever the fuel filter/water separator element is replaced, and/or after a complete draining operation.

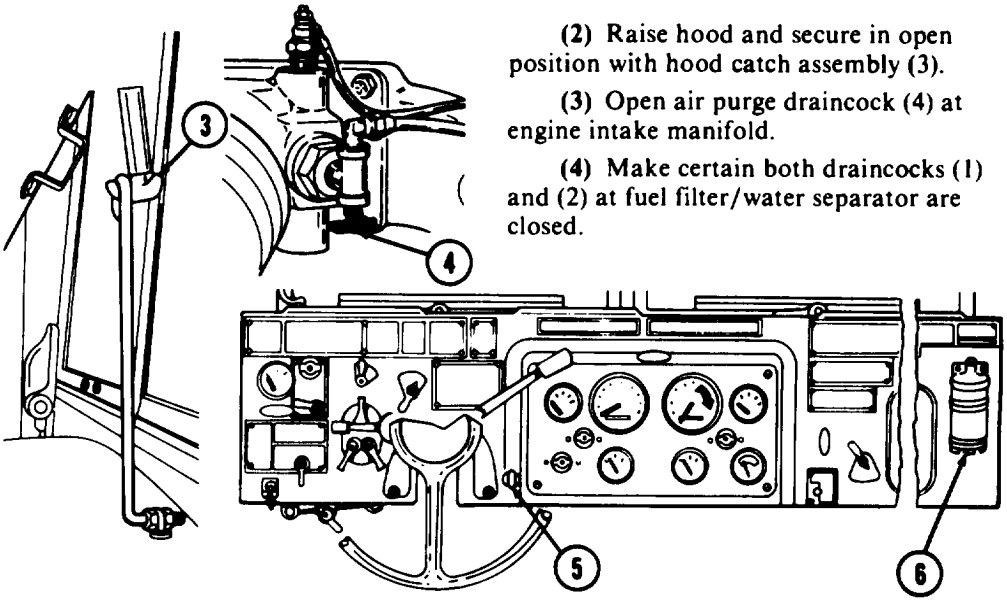


**(2) Raise hood and secure in open position with hood catch assembly (3).**

**(3) Open air purge draincock (4) at engine intake manifold.**

**(4) Make certain both draincocks (1) and (2) at fuel filter/water separator are closed.**

(5) Place a container under air purge draincock (4). Operate hand primer pump (5) to remove fuel from the fuel injection pump reservoir. Continue pumping until the flow stops, all air is expelled, and fuel begins to flow again. This requires approximately 90 seconds. Stop hand primer pump (5) operation and close air purge draincock (4). Dispose of waste fuel properly.

TA 094467

(6) Start engine and check for any fuel system leaks.

(7) Release hood from hood catch assembly (3), lower hood to closed position, and secure with hood catches

**g. Air Cleaner Service.**

**WARNING**

ŽAfter Nuclear, Biological, or Chemical (NBC) exposure of this vehicle, all air filters shall be handled with extreme caution. Unprotected personnel may experience injury or death if residual toxic agents or radioactive material are present. Servicing personnel will wear protective overgarments, mask, hood, and chemical protective gloves and boots. All contaminated air filters will be placed into double lined plastic bags and moved immediately to a temporary segregation area away from the work site. If contaminated by radioactive dust, the Company NBC team will measure the radiation before removal. The NBC team will determine the extent of safety procedures required. The temporary segregation area will be marked with the appropriate NBC signs. Final disposal of contaminated air filters will be in accordance with local SOP

ŽNBC contaminated filters must be handled using adequate precautions (refer to FM 21-40) and must be disposed of by trained personnel.

(1) Air cleaner service is required whenever the red band is visible in window of air cleaner filter indicator (6) on instrument panel. Notify organizational maintenance whenever red band is visible.

**CAUTION**

Do not operate engine without air cleaner element except in extreme emergency.

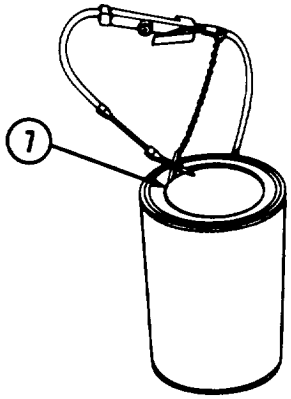


(2) In an emergency, element may be removed and serviced with compressed air. Loosen clamps on duct cap of air cleaner, remove cap and element (7). Direct compressed air from inside element (7) toward outer element surface. Then remove dirt from outer surface with compressed air. Dirt may also be removed by gently tapping sides of element. Do not strike ends of element or damage to element may result.

(3) Install air cleaner element (7). Position duct cap on end of air cleaner with arrows pointed up. Secure cap by closing clamps.

(4) Start engine and release red band by pressing bottom of air cleaner filter indicator (6). If red band does not disappear, report condition to organizational maintenance.

TA 094468

## 3-12. AIR RESERVOIRS

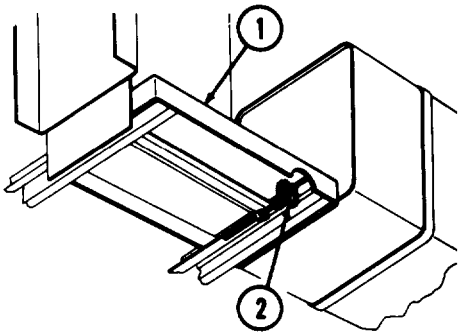


**a. General.** Two compressed air reservoirs are located under cab along left frame rail. The single draincock (2) for both reservoirs is under left running board (1) behind a cutout on running board edge.

**b. Service.** Open draincock (2) after each day's operations and allow all moisture to escape. Close draincock (2) securely.

**c. Inspection.** Make sure draincock is closed securely to prevent air escaping. If air escapes after draincock is closed tightly, notify organizational maintenance immediately.

## 3-13. BATTERY INSPECTION

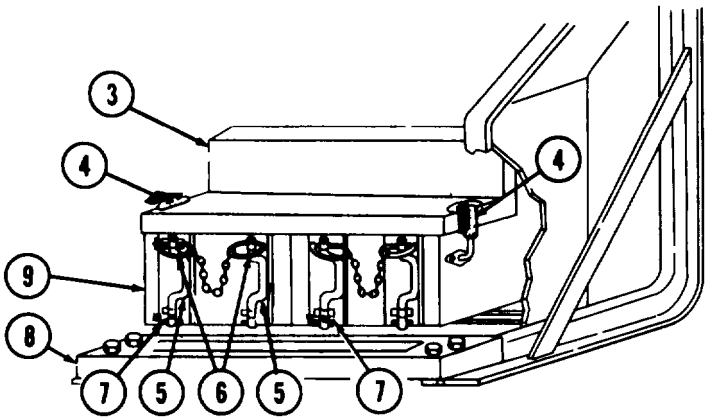


a. Unlatch two battery cover latches (4) and remove upper running board assembly (3).

b. Remove four retainer pins (6) from handles (5).

c. Lift handles (5) and pull battery boxes (9) onto vehicle step (8).

d. Remove filler caps (10) and check water level in each cell. If water level is low, notify organizational maintenance. Replace filler caps (10).

TA 094469

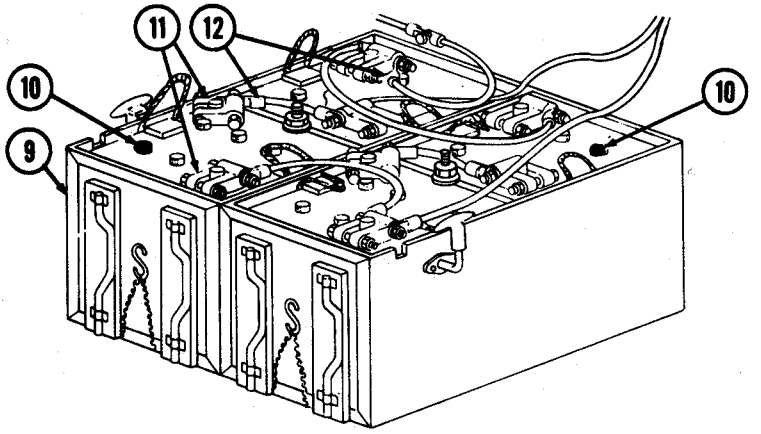


e. Check cable-to-clamp connections (12) and clamp-to-post connections (11) for tightness. If connections require tightening, notify organizational maintenance.

f. Push battery boxes (9) in place and position handles (5) in support tabs (7).

g. Secure handles (5) with retainer pins (6).

h. Install running board assembly (3) and secure with battery cover latches (4).

## 3-14. OIL RESERVOIR BREATHER CAP SERVICE (M819)

**WARNING**

Drycleaning solvent is flammable. Do not use near an open flame. Keep a fire extinguisher nearby when solvent is used. Use only in well-ventilated work place. Failure to do this can result in injury to personnel and damage to equipment.

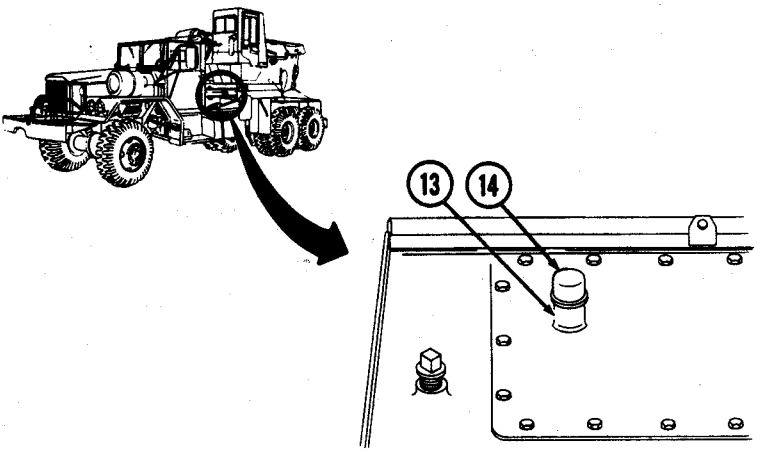


a. Pull breather cap (14) from pipe (13).

b. Clean cap (14) with solvent. Allow to dry.

c. Install cap (14) on pipe (13). Make sure cap (14) is well-seated on pipe (13).

TA 094470

## 3-15. WHEELS AND TIRES

**a. General.** Tires are checked for cuts, gouges, cracks, penetrating objects, and flats before operation. Proper air pressure is checked weekly. tires found to be flat must be replaced. Stop vehicle immediately, if tactical situation permits, whenever a tire becomes flat while operating.

**NOTE**

Two crewmembers required for spare tire removal and replacement procedures on all vehicles except M821, which requires one.

**b. Spare Wheel Removal and Replacement.**

**(1) Removal.**

**NOTE**

Support spare wheel clamp assembly (2) to prevent from falling during removal and replacement procedures.

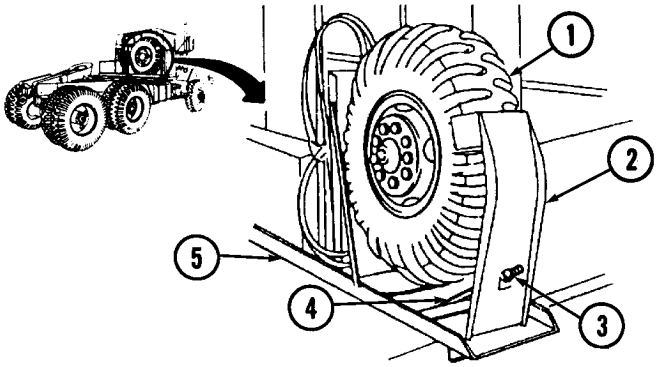


**(a)** Remove nut (3) and hook bolt (4).

**(b)** Lower clamp assembly (2) and remove spare wheel (1) from spare wheel carrier (5).

**(2) Replacement**

**WARNING**

Place spare wheel with split ring away from cab of truck. If tire should fail, split ring may enter cab, causing personnel injury.

**(a)** Lift spare wheel (1) onto carrier (5).

**(b)** Position spare wheel clamp assembly (2) on carrier (5).

**(c)** Hook bolt (4) to carrier (5) and position through hole in clamp assembly (2). SEcure with nut (3).

**c. Spare Wheel Removal and Replacement (M814).**

**(1) Removal.**

**(a)** Remove two nuts (9) and (10), two washers (8) and (11), and spring (12) from tire bolts (7).

**(b)** Remove tire bolts (7).

**(c)** Remove spare wheel (1) from spare wheel carrier (6).

**2. Replacement.**

**(a)** Position spare wheel (1) in spare wheel carrier (6).

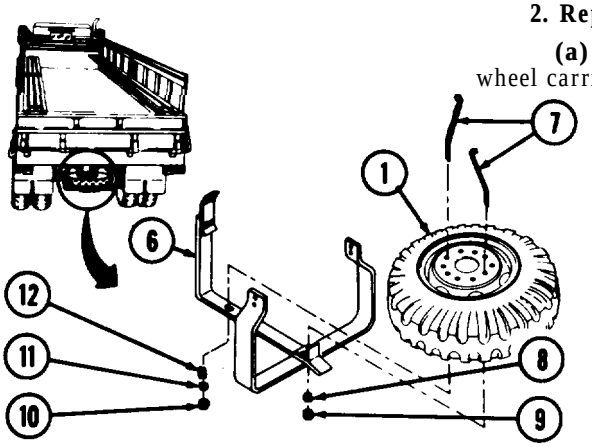


**(b)** Place tire bolts (7) through holes in spare wheel (1) and spare wheel carrier (6), and secure with spring (12), two washers (8) and (11), and two nuts (9) and (10).

**d. Spare Wheel Removal and Replacement (M819).**

**1. Removal.**

**NOTE**

When installing spare wheel on converted M819 tractor wrecker, locating pin in front hub must aline with hole in rim.

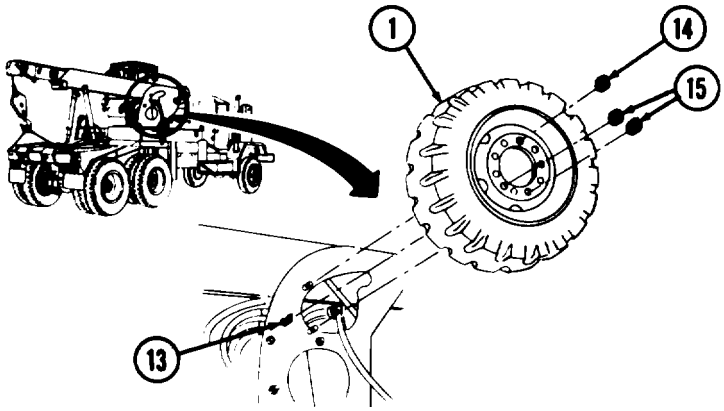


**(a)** Remove two nuts (15) and hold spare wheel (1) in place while removing third nut (14).

**(b)** Remove spare wheel (1) from carrier studs (13).

**2. Replacement.**

**(a)** Lift spare wheel (1) into position on carrier studs (13).

**(b)** Hold wheel (1) in place while securing with nuts (14) and (15).

TA 094472

**e. Spare Wheel Removal and Replacement (M816).**

**NOTE**

Use wrecker hoist to lift spare wheel on and off vehicle.

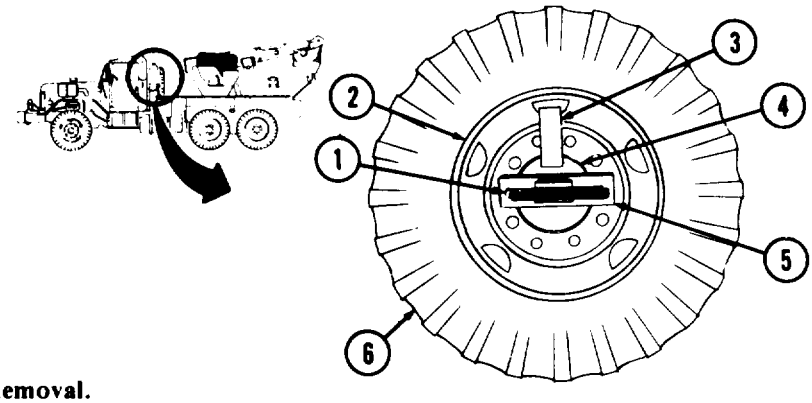


**1. Removal.**

**(a)** Turn handle (1) to unscrew and remove from holddown bracket (5). Remove bracket (5).

**(b)** Lift spare wheel (6) from mounting bracket (3) and remove from spare tire mount (4).

**2. Replacement.**

**WARNING**

Place spare wheel with split ring away from cab of truck. If tire should fail, split ring may enter cab, causing personnel injury.

**(a)** Lift spare wheel (6) on vehicle and position rim (2) on mounting bracket (3) on spare tire mount (4).

**(b)** Position holddown bracket (5) and secure with handle (1).

**f. Spare Wheel Removal and Replacement (M813 and M813A1).**

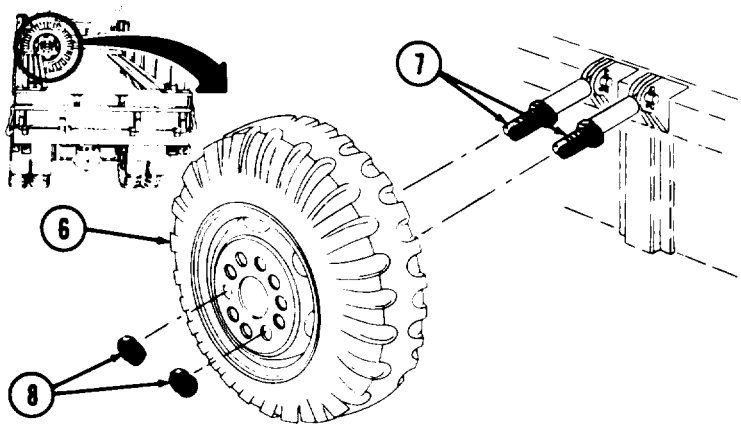


TA 094473

**1. Removal.**

**(a)** Hold spare wheel (6) in place while removing nuts (8).

**(b)** Remove spare wheel (6) from studs (7).

**2. Replacement.**

**(a)** Position spare wheel (6) on studs (7).

**(b)** Hold spare wheel (6) in place and secure with nuts (8).

**g. Spare Wheel Removal and Replacement (M821).**

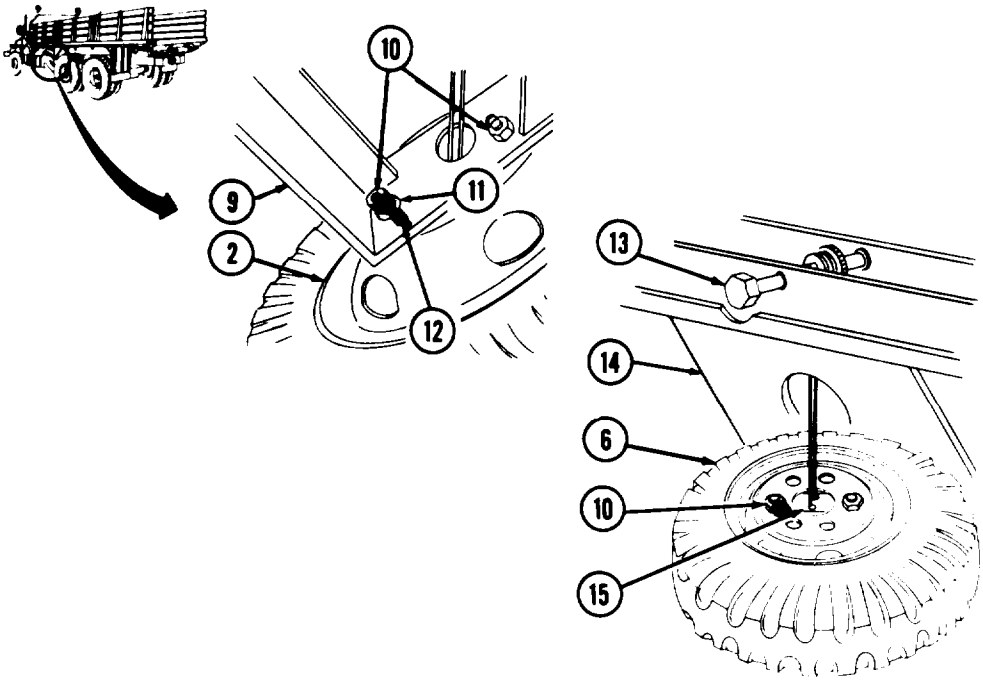


**1. Removal.**

**(a)** Loosen nuts (10) and turn spare wheel (6) so studs (12) pass through slots (11) n spare wheel carrier frame (9).

**(b)** Turn shaft (13) left and lower wheel (6) to ground.

**(c)** Remove nuts (10) and plate (15) from wheel (6).

**2. Replacement.**

**(a)** Position plate (15) and studs (12) on wheel (6).

**(b)** Install nuts (10) halfway onto studs (12).

**(c)** Turn shaft (13) right until wheel rim (2) is raised in place against rack (14).

**(d)** Turn spare wheel (6) so nuts (10) and studs (12) pass through holes in spare wheel carrier frame (9).

**(e)** Turn wheel (6) right so studs (12) pass through slots (11).

**(f)** Tighten nuts (10).

TA 094474

**h. Jacking Procedure.**

**1. Raisirng Vehicle.**

**WARNING**

Do not work under vehicle that is supported by jack only. Jack may slip, causing vehicle to fall, resulting in severe injury to personnel.

**NOTE**

This task is shown for the left rear-rear wheel only, but is the same for all wheels.

**(a)** Remove hydraulic screw jack (2) and handle (3) from stowage compartment.

**(b)** Position screw jack (2) on ground under spring seat (1).

**(c)** Manually turn screw jack (2) until it touches spring seat (1).

**(d)** Turn bleeder valve (4) clockwise with slotted end of jack handle (3).

**(e)** Place handle (3) in jack (2) and move up and down to raise wheel assemblies (5) off ground.

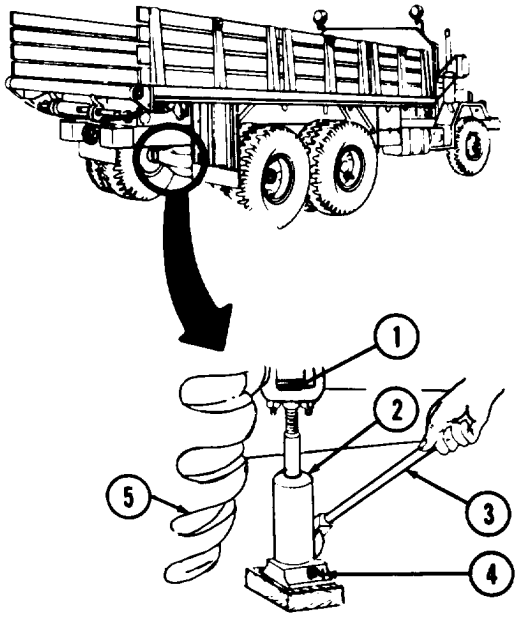


**2. Lowering Vehicle.**

**(a)** Turn bleeder valve (4) counterclockwise with slotted end of jack handle (3), and vehicle wheel assembly (5) will gently lower to ground level.

**(b)** When wheel assembly (5) is firmly on ground, remove jack (2) and handle (3) from under vehicle and place in stowage compartment.

**i. Front and Rear Wheels Removal and Replacement.**

**NOTE**

The following procedures are the same for both front wheels and all four outer rear wheels.

**1. Removal.**

**(a)** Apply vehicle parking brake. If vehicle is on an incline, chock wheels on both sides.

**(b)** Install wheel stud nut handle (6) through wrench (7) and fit wrench on wheel stud nuts (8). Loosen all wheel stud nuts (8) but do not remove.

**TA 094475**

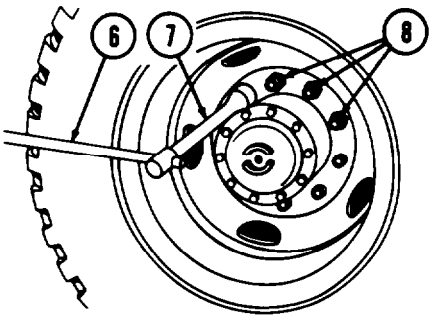


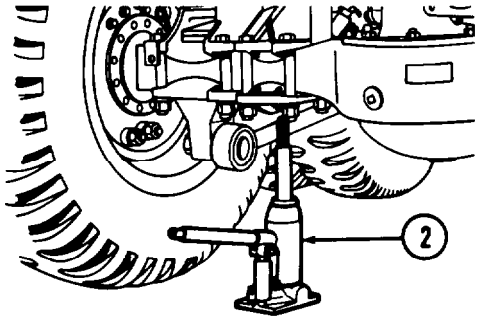


**NOTE**

Wheel stud nuts (8) on left side have left hand threads and must be turned to the right to loosen. Wheel stud nuts (8) on right side have right hand threads and must be turned to the left to loosen.

**(c)** Position hydraulic jack (2) and raise wheel assembly (refer to h. 1. above).

**(d)** Remove all stud nuts (8) from wheel, and remove wheel from axle. If inner wheel is to be removed, reverse wheel stud nut wrench (7), remove handle (6), and install near large end of wrench (7). Remove inner wheel stud nuts and remove inner wheel from axle.

**2. Replacement.**

**(a)** Remove spare wheel from carrier bracket (refer to b., c., d., e., f., or g. above for removal procedure).

**NOTE**

Tread depth and pattern of dual tires should be matched as closely as possible.

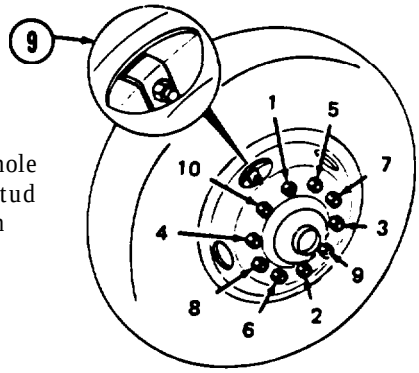


**(b)** Position wheel and tire on axle hub over wheel studs, Ventilating hole in rear-rear and front wheels should be alined with brakedrum inspection hole (9). If inner wheel was replaced, make certain inner stud nuts are properly seated as they are installed. Tighten securely in sequence shown.

**NOTE**

Have stud nuts checked and tightened to specified torque by organizational maintenance as soon as possible.

**(c)** Place outer wheel over axle hub and position so valve stem is opposite to that of inner wheel. Tighten all wheel stud nuts (8) securely in sequence shown above.

TA 094776

**(d)** Lower wheel assembly (refer to h.2. above).

**(e)** Replace wheel removed from spare wheel carrier; (refer to b., c., d., e., f., or g. above for installation procedure).

**NOTE**

Return unserviceable wheel and tire assembly to organizational maintenance for repair, replacement, or exchange.

## 3-16. TIRE INFLATION

**a. General.** Tires require a weekly pressure check. Inflation pressure is one of the most important elements of tire care. Pressure recommendations for tires on all models have been carefully selected to provide good tire life. See table 1-4 for recommended tire pressures. Check and adjust tire pressures when tires are cold, because pressures normally increase during operation. Never decrease pressure of warm tires except for operations in mud, sand, or snow. Reinflate tires which were deflated for operations in mud, sand, or snow after operations are completed.

**b. Tire Gaging.**

**(1)** Remove tire inflation gage (10), and hose (4) assembly from tool compartment.

**(2)** Start at one corner of vehicle and gage all tires. Remove tire valve caps, apply tire gage air chuck (8) on tire valve (7), and press down to read tire pressure on gage dial (9). Reinstall tire valve caps and tighten caps finger tight.

TA 094477

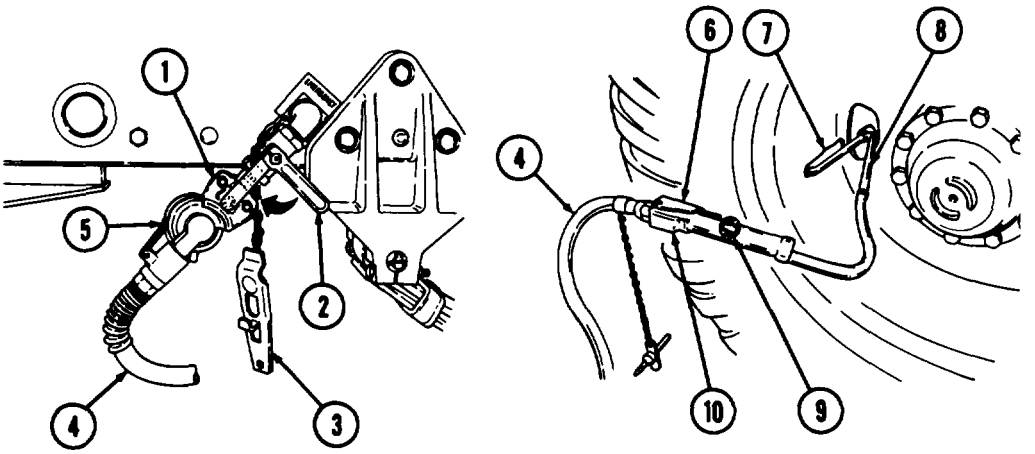


**c. Tire Inflation.**

**(1)** Start engine and apply parking brake. Make sure air reservoir pressure is higher than recommended tire pressure by checking air pressure gage on instrument panel.

**(2)** Remove half coupling covers (3). Install tire inflation gage (10) and hose (4) assembly coupling (5) to the left-front emergency trailer air half coupling (1) to inflate front tires, and right-rear emergency trailer half coupling (1) to inflate rear tires. Turn trailer air valve handle (2) at half coupling (1) 90 degrees counterclockwise to release compressed air to gage (10), and hose (4) assembly.

**(3)** Remove tire valve cap, apply air chuck (8) on tire valve stem (7), and press down firmly. Depress air chuck lever (6) to inflate tire. Release lever (6) momentarily to read tire pressure on gage dial (9). Adjust tire pressure as necessary.

**(4)** When tire inflation operation is completed, turn trailer air valve handle (2) 90 degrees clockwise to close. Uncouple gage (10), and hose (4) assembly from trailer air half coupling (1), and install cover (3) on half coupling (1).

**(5)** Return tire inflation gage (10), and hose (4) assembly to tool compartment.

TA 094478

## 3-17. WINCH SHEARPIN REPLACEMENT

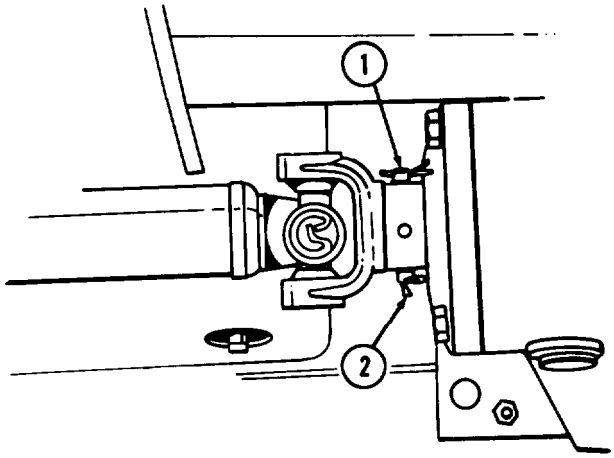


**a. General.** An aluminum shearpin (1) connects the universal joint yoke and front winch drive shaft. The shearpin (1) is designed to break whenever the winch is overloaded and is retained with cotter pins (2).

**CAUTION**

Never substitute rivets, pins, bolts. or nails for the shearpin (1). Damage to component can result.

**b. Replacement.** Turn universal joint yoke on winch drive shaft and aline shearpin holes in yoke with hole through shaft. Push broken part of shearpin (1) from drive shaft with a new shearpin. Install cotter pins (2) on each end of new shearpin (1).

TA 094479

# APPENDIX A
# REFERENCES

## A-1. PUBLICATION INDEX

The following index should be consulted frequently for latest changes or revisions and for new publications relating to material covered in this manual.

Consolidated Index of Army Publications and Blank Forms . . . . . DA Pam 25-30

## A-2. OTHER PUBLICATIONS

**a. Technical Manuals.**

Ammunition and Explosives Standards . . . . . TM 9-1300-206
Cleaning Materials . . . . . TM 9-247
Operator's Organizational, Direct Support, General Support, and Depot Maintenance Manual for Air Conditioner, Floor Mtg, 208V, 3 Phase, 60 Hz, AC; 36,000 BTU/Hr, (York Corp. Model MA3-F23A) (NSN 4120-00-926-1116) and (Therm-Air Mfg. Co. Model CB-36-08-3-60) (NSN 4120-00-935-5348) . . . . . TM 54120-259-15
Operator's Organizational, Direct Support and General Support Maintenance Manual (Including Repair Parts List) for Trailer, Bolster; 4-Ton, 4-Wheel, General Purpose, M796 (NSN 2330-00-089-3866) and M796A1 (NSN 2330-01-137-5116) . . . . . TM 9-2330-287-14&P
Operator's and Organizational Maintenance Manual (Including Repair Parts and Special Tools List) for Decontaminating Apparatus, Portable, DS2, 1-1/2 Qt, ABC-M11 (NSN 4230-00-720-1618) . . . . . TM 3-4230-204-12&P
Operator's, Organizational, Direct Support and General Support Maintenance Manual Including Repair Parts and Special Tools List (Including Depot Maintenance Repair Parts and Special Tools): Various Machine Gun Mounts and Combinations Used on Tactical and Armored Vehicles . . . . . TM 9-1005-245-13&P
Standards and Criteria for Technical Inspection and Classification of Tires (FSC 2610) . . . . . TM 9-2610-200-14

**b. Technical Bulletins.**

Equipment Improvement Report and Maintenance Digest . . . . . .TB 43-0001-62
Load-Testing Vehicles Used to Handle Missiles and Rockets Medium Wrecker M62, Medium Wrecker Truck M543 Series, and M816; and Wrecker-Truck Tractor M246 Series and M819 . . . . . TB 9-352
Occupational and Environmental Health: Hearing Conservation . . . . . Pam 40-501
Safety Inspection and Testing of Lifting Devices . . . . . TB 43-0142
Security of Tactical Wheeled Vehicles . . . . . TB 9-2300-422-20
Use of Antifreeze Solutions and Cleaning Compounds in Engine Cooling Systems . . . . . TB 750-651

**c. Field Manuals.**

Basic Cold Weather Manual . . . . . FM 31-70
First Aid for Soldiers . . . . . FM 21-11
Manual for the Wheeled Vehicle Driver . . . . . FM 21-305
Mountain Operations . . . . . FM 90-6 (HTF)
NBC Decontamination . . . . . FM 3-5

# APPENDIX A (Cont'd)

Northern Operations . . . . . FM 31-71
Operation and Maintenance of Ordnance Materiel in
Cold Weather (0° to -65°F) . . . . . FM 9-207
Route Reconnaissance and Classification . . . . . FM 5-170
Vehicle Recovery Operations . . . . . FM 9-43-2

**d. General Publications.**

Driver Selection, Testing, and Licensing . . . . . AR 600-55
Hand Receipt . . . . . TM 9-2320-260-10-HR
Procedures for Destruction of Tank-Automotive Equipment
to Prevent Enemy Use . . . . . TM 750-244-6
The Army Maintenance Management System (TAMMS) . . . . . DA Pam 738-750
Truck Chassis: 5-Ton, 6x6, M809, M809A1, M810, M811,
M811A1, M811A2, and Rocket Launcher Chassis M812A1;
Truck, Cargo: 5-Ton, 6x6, M813; Dropside, M813A1, Cargo, M814;
Truck, Bolster, Logging: M815; Truck, Wrecker, Medium: M816;
Truck, Dump: M817; Truck, Tractor: M818; Truck, Tractor,
Wrecker: M819; Truck, Van, Expansible: M820, M820A1,
M820A2; Truck, Stake, Bridge Transporting, M821 . . . . . LO 9-2320-260-12

**e. Forms.**

Equipment Control Record . . . . . DA Form 2408-9
Equipment Inspection and Maintenance Worksheet . . . . . DA Form 2404
Maintenance Request . . . . . DA Form 2407
Quality Deficiency Report . . . . . SF Form 368
Recommended Changes to DA Publications . . . . . DA Form 2028

# APPENDIX B
# COMPONENTS OF END ITEM AND BASIC ISSUE ITEMS LISTS

## Section I. INTRODUCTION

### B-1. SCOPE

This appendix lists components of end item and basic issue items for M809 series, 5-ton, 6x6, trucks to help you inventory items required for safe and efficient operation.

### B-2. GENERAL

The components of end item and basic issue items lists are divided into the following sections:

**a. Section II, Components of End Item.** This listing is for informational purposes only, and is not authority to requisition replacements. These items are part of the end item, but are removed and separately packaged for transportation or shipment. As part of the end item, these items must be with the end item whenever it is issued or transferred between property accounts. Illustrations are furnished to assist you in identifying the items.

**b. Section III, Basic Issue Items (BII).** These are the minimum essential items required to place the M809 series trucks in operation, to operate them, and to perform emergency repairs. Although shipped separately packaged, BII must be with the truck during operation and whenever it is transferred between property accounts. The illustrations will assist you with hard-to-find items. The manual is your authority to request/requisition replacement BII, based on TOE/MTOE authorization of the end item.

### B-3. EXPLANATION OF COLUMNS

The following provides an explanation of columns found in the tabular listings:

**a. Column (1) - Item Number.** This column indicates the number of the illustration in which the item is shown.

**b. Column (2) - National Stock Number.** Indicates the national stock number assigned to the item and will be used for requisitioning purposes.

**c. Column (3) - Description.** Indicates the federal item name and, if required, a minimum description to identify and locate the item. The last line for each item indicates the FSCM (in parentheses) followed by the part number.

**d. Column (4) - Unit of Measure (U/M).** Indicates the measure used in performing the actual operational/maintenance function. This measure is expressed by a two-character alphabetical abbreviation (e.g., ea. in., pr).

**e. Column (5) - Quantity required (Qty rqr).** Indicates the quantity of the item authorized to be used with/on the equipment.

TA 094482

**f. Usable On Code.** Usable on codes help you identify items which are used on different models. Codes used in these lists are:

| MODEL | USABLE ON CODE | MODEL | USABLE O CODE |
|---|---|---|---|
| M809 w/w | 612 | M814 w/w | 628 |
| M809 wo/w | 613 | M814 wo/w | 629 |
| M809A1 w/w | 615 | M815 w/w | 614 |
| M810 w/w | 623 | M816 w/w | 622 |
| M810 wo/w | 624 | M817 w/w | 633 |
| M811 w/w | 616 | M817 wo/w | 627 |
| M811 wo/w | 639 | M818 w/w | 634 |
| M811A1 w/w | 617 | M818 wo/w | 635 |
| M811A2w/w | 618 | M819 w/w | 636 |
| M812 | 619 | M820 wo/w | 630 |
| M812A1 w/w | 621 | M820A1 wo/w | 631 |
| M813 w/w | 625 | M820A2 wo/w (W/HLG) | 632 |
| M813 wo/w | 626 | M821 wo/w | 620 |
| M813A1 w/w (Dropside) | 637 | | |
| M813A1 wo/w (Dropside) | 638 | | |

**g. Quantity Furnished with Equipment:** Lists quantity of each item required for a complete major item.

TA 094483

## B-4. ABBREVIATIONS

The following abbreviations appear in the description column:

| Abbr. | Explanation | Abbr. | Explanation |
|---|---|---|---|
| assy | assembly | lb | pound(s) |
| cap | capacity | max | maximum |
| circum | circumference | min | minimum |
| cont | contained | mo. | number |
| cu | cubic | oz | ounce(s) |
| dia | diameter | pt | point |
| dbl | double | rd | round |
| ft | foot (feet) | sgl | single |
| hex | hexagon (al) | sq | square |
| hyd | hydraulic | w/ | with |
| in. | inch(es) | wo/ | without |

## B-5. FEDERAL SUPPLY CODES FOR MANUFACTURER

| Code | Manufacturer |
|---|---|
| 04741 | White Motor Corp., Autocar Division |
| 18075 | Dockson Corp. |
| 18876 | Calamari Co. of America |
| 19204 | Rock Island Arsenal |
| 19207 | U.S. Army Tank-Automotive Command |
| 21450 | Ordnance Corps Engineering Stds. |
| 28047 | Hein-Werner Corp. |
| 42527 | National Cylinder Gas Division, Chemetron Corp. |
| 50980 | U.S. Army General Materiel and Petroleum Activity |
| 63026 | Victor Equipment Co. |
| 65814 | J.H. Williams and Co. |
| 80244 | General Services Administration, Federal Supply Service |
| 81348 | Federal Specifications Promulgated by General Service Administration |
| 81349 | Military Specifications Promulgated by Standardization Div. Directorate of Logistic Services DSA |
| 96906 | Military Standards |

# Section II. COMPONENTS OF END ITEM LIST

## B-6. GENERAL

These items are installed in the vehicle at time of manufacture or rebuild.

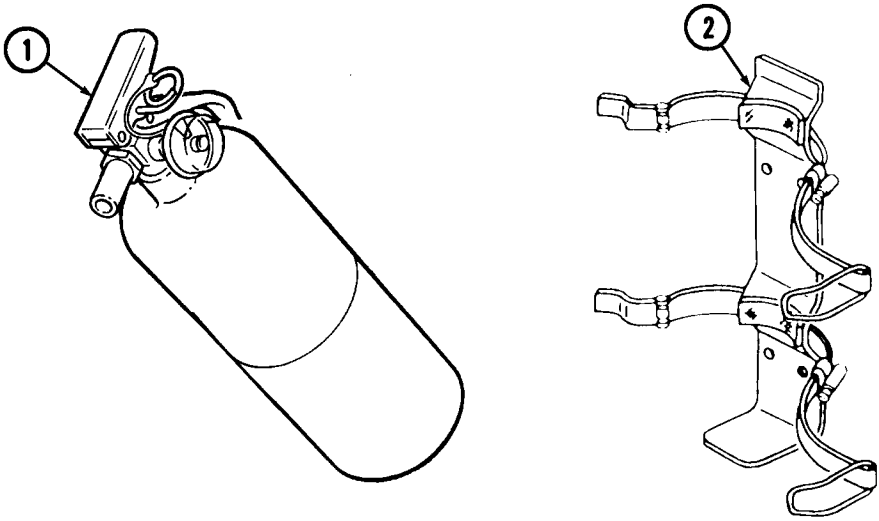


| ITEM NO. | NATIONAL STOCK NUMBER | DESCRIPTION FSCM AND PART NO. | USABLE ON CODE | U/M | QTY RQR |
|---|---|---|---|---|---|
| 1 | 4210-01-189-6452 | FIRE EXTINGUISHER: 5 lb, dry chemical, purple K, 12255633-3 (19207) | 622,630 631,632 | EA | 3 |
| | | | 636 | EA | 2 |
| | | | 634,635 | EA | 1 |
| 2 | 4210-01-183-4822 | BRACKET: fire extinguisher 12255634 (19207) | 622,630 631,632 | EA | 3 |
| | | | 636 | EA | 2 |
| | | | 634,635 | EA | 1 |

# Section III. BASIC ISSUE ITEMS LIST

## B-7. GENERAL

These are the minimum essential items required to place and maintain M809 series vehicles in operation. Although shipped separately packed, BII must accompany the truck during operation and whenever it is transferred between accountable officers. The illustrations will assist you to identify each basic issue item.

## BASIC ISSUE ITEMS

| Item No. | National Stock No. | Description<br>CAGEC and Part No. | Usable On Code | Qty. Furn. With Equip. |
|---|---|---|---|---|
| | | **COMMON EQUIPMENT, COMMON TOOLS (all trucks and chassis)** | | |
| 1. | 2540-00-670-2459 | BAG: pamphlet, cotton duck, 3 in. x 9-1/4 in. x 11-1/4 in. [in map compartment] (19207) 11676920 | All | 1 |
| 2. | 5140-00-772-4142 | BAG: tool, cotton duck, 10-1/8 in. x 20-1/4 in. x 11-1/4 in. w/flap [in tool compartment] (81349) 7724142 | All | 1 |
| 3. | 5120-00-243-2419 | BAR: handle, wheel stud nut wrench, 3/4 in. dia. x 30 in. long, [in tool compartment] (19207) 6196147 | All | 1 |
| 4. | 4910-01-417-2734 | GAGE AND HOSE ASSEMBLY: tire inflation, self-contained w/30 ft hose [in tool compartment] (19207) 11677140-10 | All | 1 |
| 5. | 5120-00-595-8396 | JACK: hydraulic, hand, 8 ton capacity, 9 in. closed, 19-1/2 in. open, w/operating lever, type I, class 2, style A, size 8-6, [in tool compartment] (04741) 12300922 | All | 1 |
| 6. | 5315-00-732-1019 | KEY WRENCH: oil drainplug, straight bar key, 1/2 in. square, 2-1/2 in. long [in toolbag] (96906) MS20066-543 | All | 1 |

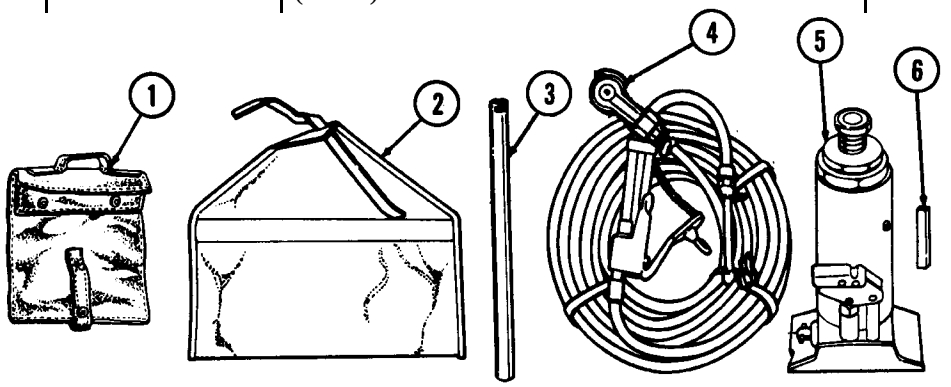

## BASIC ISSUE ITEMS (Cont'd)

| Item No. | National Stock No. | Description CAGEC and Part No. | Usable On Code | Qty. Furn. With Equip. |
|---|---|---|---|---|
| | | **COMMON EQUIPMENT, COMMON TOOLS (all trucks and chassis) (Cont'd)** | | |
| 7. | | MANUAL: technical (operator's) [in pamphlet bag] TM 9-2320-260-10 | All | 1 |
| 8. | | ORDER: lubrication [in pamphlet bag] LO 9-2320-260-12 | All | 1 |
| 9. | 5340-01-050-7059 | PADLOCK SET: keyed alike, 1-1/2 in. size, w/clevis and chain, composed of 5 padlocks, 5 keys per set [latch on tool compartment] (96906) MS21313-50 | All | 1 |
| 10. | 5120-00-223-7397 | PLIERS: combination, slip-joint, straight nose, w/cutter, 8 in. long, phosphate finish [in toolbag] (19207) 11655775-3 | All | 1 |
| 11. | 5315-00-842-3044 | PIN: cotter, 3/4 in. long [in toolbag] (96906) MS24665-283 | All w/front winch | 6 |
| 12. | 5315-00-209-7979 | PIN: shear, 3/8 in. x 2-5/8 in. long [in toolbag] (19207) 7409348 | All w/front winch | 3 |
| 13. | 5120-00-061-8546 | HAMMER: hand, machinist, ball-peen, 1 lb. HD. WT., 15 in.-17 in. long [in toolbag] (19207) 11677028-3 | All w/front winch | 1 |
| 14. | 5120-00-752-9031 | PUNCH: drive, point, 5/32 in. dia. x 2 in. long min., 8 in. min. overall length (in toolbag) (19207) 11677010-0 | All w/front winch | 1 |

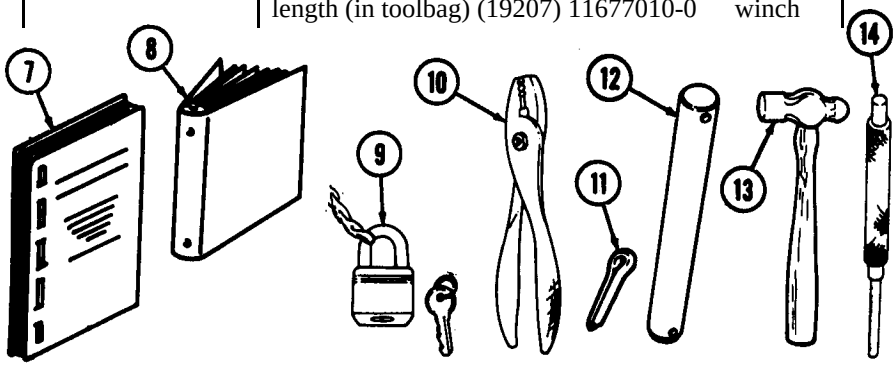

## BASIC ISSUE ITEMS (Cont'd)

| Item No. | National Stock No. | Description CAGEC and Part No. | Usable On Code | Qty. Furn. With Equip. |
|---|---|---|---|---|
| | | **COMMON EQUIPMENT, COMMON TOOLS (all trucks and chassis) (Cont'd)** | | |
| 15. | 5120-00-234-8913 | SCREWDRIVER: cross tip, Phillips, plastic handle, point no. 2, 4 in. blade, 7-1/2 in. overall length [in toolbag] (19207) 11655777-12 | All | 1 |
| 16. | 5120-00-222-8852 | SCREWDRIVER: flat tip, flared sides, plastic handle, round blade, 1/4 in. wide tip, 4 in. long blade, 8 in. overall length [in toolbag] (19207) 11655777-2 | All | 1 |
| 16.1. | 9905-00-148-9546 | WARNING DEVICE: highway, triangular, reflective [in tool compartment] (19207) 11669000 | All | 1 |
| 17. | 5120-00-264-3796 | WRENCH: adjustable, open-end, heavy duty, 12 in. long, 1.32 in. jaw opening [in toolbag] (19207) 11655778-5 | All | 1 |
| 18. | 5120-00-240-5328 | WRENCH: open end, adjustable, .95 in. jaw opening, 8 in. long [in toolbag] (19207) 11655778-3 | All | 1 |
| 19. | 5120-00-316-9217 | WRENCH: wheel stud nut, straight, double socket, 1-1/2 in. hexagon opening, 13/16 in. square opening, 17 in. to 19 in. long, type II, size no. 2 length [in tool compartment] (19207) 11677000-3 | All except 619,620, 621 | 1 |
| 20. | 5120-00-795-0664 | WRENCH: socket, 22 in. to 24 in. long, removable handle, square and hexagon end internal (19207) 7950664 | 619,620, 621 | 1 |

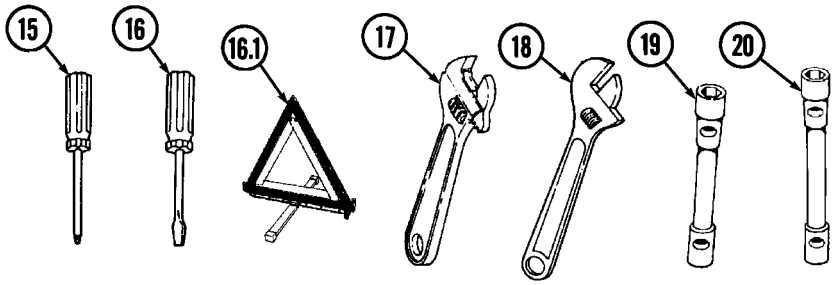

## BASIC ISSUE ITEMS (Cont'd)

| Item No. | National Stock No. | Description CAGEC and Part No. | Usable On Code | Qty. Furn. With Equip. |
|---|---|---|---|---|
| | | **TOOLS AND EQUIPMENT — MEDIUM WRECKER (M816)** | | |
| 1. | 4930-00-288-1511 | ADAPTER: grease gun, flexible extension, 1/8 in.-27 NPTF [in compartment no. 2] (81349) M4387-18 | 622 | 1 |
| 2. | 5110-00-293-2336 | AX: single bit, 4 lb head, 4-3/4 in. cutting edge, 35-1/2-36-1/2 in. long, olive drab finish (34623) MA207-21880 | 622 | 1 |
| 3. | 2540-00-860-2359 | BAR: shaft, cranking, outrigger 1 in. dia., 12 in. long, olive drab [one in compartment 6 and one in compartment no. 7] (19207) 10900233 | 622 | 2 |
| 4. | 4910-00-347-9703 | BAR: hoisting, whiffle tree [in compartment no. 4] (19207) 8690061 | 622 | 1 |

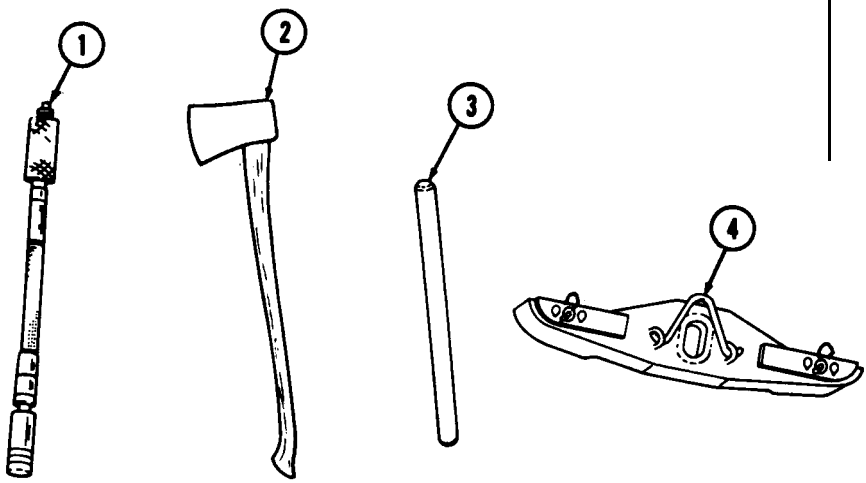

## BASIC ISSUE ITEMS (Cont'd)

| Item No. | National Stock No. | Description<br>CAGEC and Part No. | Usable On Code | Qty. Furn. With Equip. |
|---|---|---|---|---|
| | | **TOOLS AND EQUIPMENT — MEDIUM WRECKER (M816) (Cont'd)** | | |
| 5. | 5120-00-224-1372 | BAR: pinch, offset and tapered ends, 1 in. hexagon, 26 in. long, olive drab [in compartment no. 3A] (81348) GGG-B-101 | 622 | 1 |
| 6. | 2540-00-040-2298 | BAR: tie, boom jacks [on top of boom jack tubes] (19207) 8330152 | 622 | 1 |
| 7. | 5120-00-293-0665 | BAR: wrecking, gooseneck and pinch-point, with claw, 30 in. long, olive drab [in compartment no. 3A] (81348) GGG-B-101 | 622 | 1 |
| 8. | 2540-00-040-2299 | BASE PLATE: boom jack [in mounting brackets, left and right sides of rear winch] (19207) 8330155 | 622 | 2 |
| 9. | 3940-00-792-9881 | BLOCK: rigging, wire rope, double 8 in. sheave, w/swivel shackle, 3/4 in. dia. rope, 25-ton capacity, olive drab [in compartment no. 5] (19207) 8379923 | 622 | 2 |

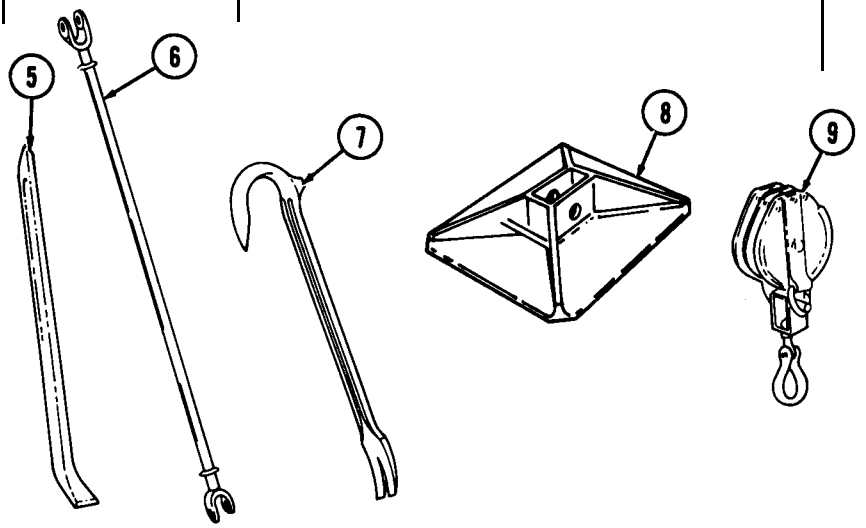

## BASIC ISSUE ITEMS (Cont'd)

| Item No. | National Stock No. | Description CAGEC and Part No. | Usable On Code | Qty. Furn. With Equip. |
|---|---|---|---|---|
| | | **TOOLS AND EQUIPMENT — MEDIUM WRECKER (M816) (Cont'd)** | | |
| 10. | 3940-00-899-1352 | BLOCK: snatch, wire rope, single 10 in. sheave, w/swivel eye and shackle, 3/4 in. dia. rope, 15-ton capacity, olive drab [in compartment no. 5] (19207) 8383238 | 622 | 2 |
| 10.1. | 2540-01-373-0088 | BOX ASSEMBLY: stowage accessories [in compartment no. 1A and 2A] (19207) 12375821 | 622 | 1 |
| 10.2. | 6150-01-027-0125 | CABLE ASSEMBLY: battery booster cables [in compartment 1A] (19204) 7550899 | 622 | 1 |
| 11. | | Deleted | | |
| 12. | 4010-00-443-4845 | CHAIN: utility, single leg, 3/8 in. link, 14-1/2 ft long,w/2 grab hooks, 6600 lb capacity [in compartment no. 7] (19207) 10944642-2 | 622 | 1 |
| 13. | 4010-01-010-2536 | CHAIN: utility, single leg, 3/4 in. link, 12 ft long, w/grab hook, w/pear-shaped coupling link, 17,700 lb capacity [in bracket, left and right side of spare tire] (19207) 8744250 | 622 | 2 |
| 14. | 5110-00-186-7107 | CHISEL: hand cold, 0.5 in. cut, 5-3/4 in. long [in compartment no. 7] (81348) GGG-C-313 | 622 | 1 |

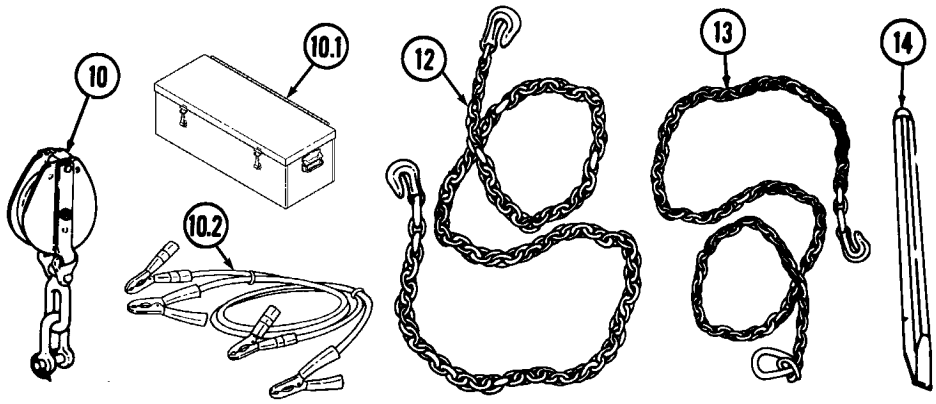

## BASIC ISSUE ITEMS (Cont'd)

| Item No. | National Stock No. | Description<br>CAGEC and Part No. | Usable On Code | Qty. Furn. With Equip. |
|---|---|---|---|---|
| | | **TOOLS AND EQUIPMENT — MEDIUM WRECKER (M816) (Cont'd)** | | |
| 14.1. | 4010-00-473-6166 | CHAIN: utility, single leg, 5/8 in. link, 16 ft lg, w/grab hook and 2 pear-shaped coupl.ing links (19207) 7077063 | 622 | 1 |
| 15. | 3830-00-315-2306 | CHOCK: field [in compartment no. 4] (19207) 8330150 | 622 | 2 |
| 16. | 6150-00-548-0387 | CORD: extension, w/single contact plug and plug socket, 25 ft long [in compartment no. 2] (19207) 7326618 | 622 | 1 |
| 17. | 5120-00-224-1390 | CROWBAR: pinch-point, 47 in.-49 in. long, olive drab [in compartment 3A] (19207) 11677049-1 | 622 | 2 |
| 18. | 5110-00-188-2524 | CUTTER: bolt, rigid head, clipper cut, 9/16 dia., capacity 35 in.-39 in. long (81348) GGG-C-740 | 622 | 1 |
| 19. | 8120-00-268-3360 | CYLINDER: compressed gas, acetylene, 225 cu. ft capacity [in bracket behind cab, forward right side of wrecker body] (81349) MIL-C-3701 | 622 | 1 |

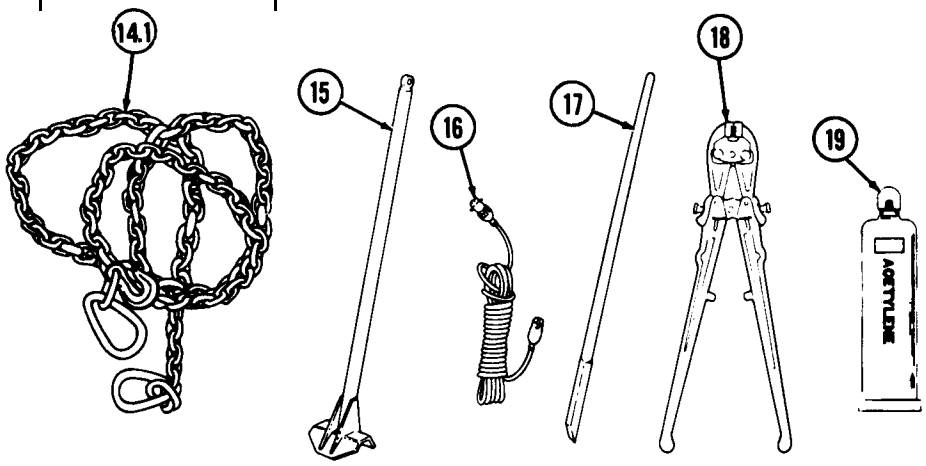

## BASIC ISSUE ITEMS (Cont'd)

| Item No. | National Stock No. | Description CAGEC and Part No. | Usable On Code | Qty. Furn. With Equip. |
|---|---|---|---|---|
| | | **TOOLS AND EQUIPMENT — MEDIUM WRECKER (M816) (Cont'd)** | | |
| 20. | 8120-00-357-7992 | CYLINDER: compressed gas, oxygen, 250 cu ft capacity, filled w/oxygen [in bracket behind cab, forward left side of wrecker body] (81348) RR-C-901/1 | 622 | 1 |
| 21. | 6545-00-922-1200 | FIRST-AID KIT: general pupose, 12 unit [in toolbox] (19207) 11677011 | 622 | 1 |
| 22. | 4930-00-253-2478 | GREASE GUN: hand, lever-operated, 14 oz. cartridge or bulk load, w/16 in. extension [in compartment no. 2] (19207) 5644803 | 622 | 1 |
| 23. | 5120-00-900-6097 | HAMMER: hand, sledge, black-smith's, double-face 10 lb, 30 in. to 33 in. handle length, olive drab finish, type X, class I [in compartment no. 3B] (81348) GGG-H-86 | 622 | 1 |
| 24. | 5120-00-288-6574 | HANDLE: pick or mattock, no. 6 eye hickory, 36 in. long [in compartment no. 3A] (19207) 11677021 | 622 | 1 |

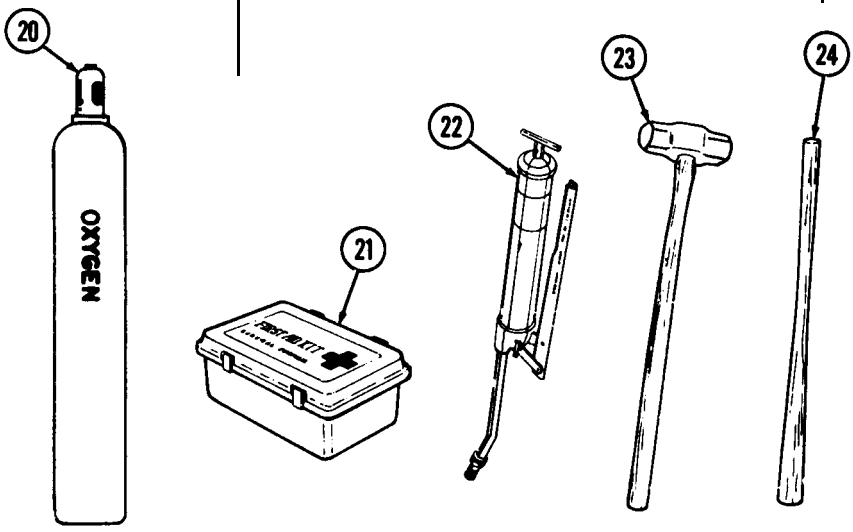

## BASIC ISSUE ITEMS (Cont'd)

| Item No. | National Stock No. | Description<br>CAGEC and Part No. | Usable On Code | Qty. Furn. With Equip. |
|---|---|---|---|---|
| | | **TOOLS AND EQUIPMENT — MEDIUM WRECKER (M816) (Cont'd)** | | |
| 25. | 4720-00-740-9662 | HOSE: air connecting, inter-vehicular, 10-1/2 ft long, w/2 half coupling ends [in compartment no. 3B] (19207) 7954874 | 622 | 2 |
| 26. | 4720-00-899-6721 | HOSE: tank drain, hydraulic oil, 1-3/16 in. outside dia. x 5 ft long, olive drab finish [in compartment no. 3B] (19207) 10900093 | 622 | 1 |
| 27. | 5120-00-188-1790 | JACK: hydraulic, hand, self cont., 30-ton capacity, w/lever, olive drab finish [in compartment no. 3B] (28047) RHD 160 | 622 | 1 |
| 28. | 2590-00-148-7961 | KIT: intervehicle power cable, NATO slave, 24-volt, 20 ft long with 2 adapters [in compartment no. 2] (19207) 11682379-1 | 622 | 1 |
| 29. | 6230-00-239-3523 | LIGHT CORD [in compartment no. 2] (21450) 6209297 | 622 | 1 |
| 30. | 5120-00-243-2395 | MATTOCK: pick, 5 lb without handle [in compartment no. 3A] (19207) 11677022 | 622 | 1 |

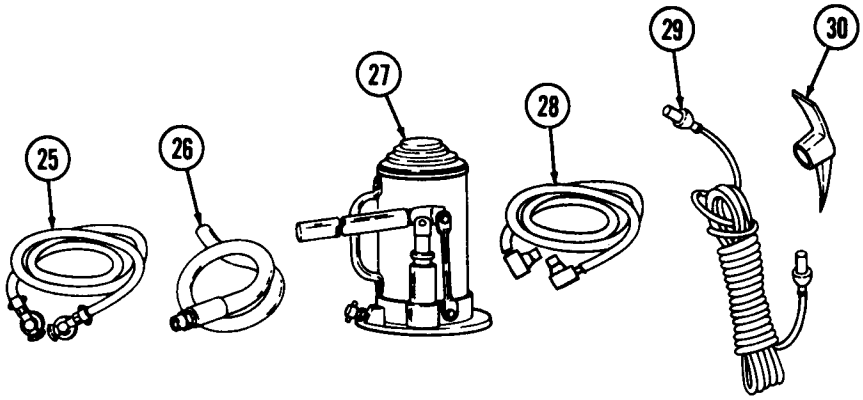

## BASIC ISSUE ITEMS (Cont'd)

| Item No. | National Stock No. | Description CAGEC and Part No. | Usable On Code | Qty. Furn. With Equip. |
|---|---|---|---|---|
| | | **TOOLS AND EQUIPMENT — MEDIUM WRECKER (M816) (Cont'd)** | | |
| 31. | 4930-00-344-6472 | OILER: hand, push bottom, 1/3 pint capacity [on side of deck in 10910956-1 bracket] (19204) 6008514 | 622 | 1 |
| 32. | 5340-00-838-5266 | PADLOCK: set, class 2, keyed alike, 10 padlocks, equipped with 2 keys per set, w/clevis and chain [compartment doors] (96906) MS21313-124 | 622 | 1 |
| 33. | 5340-00-854-4431 | PIN: inner boom jack, w/lockpin, olive drab finish [in compartment no. 7] (19207) 10876413 | 622 | 1 |
| 34. | 5315-01-220-3163 | PIN: boom jack, w/lockpin, olive drab finish [in compartment no. 7] (19207) 7409829-1 | 622 | 2 |
| 35. | 5315-00-316-1008 | PIN: retaining, boom jack, tie bar [in compartment no. 3] (19207) 8327939 | 622 | 2 |
| 35.1. | 5315-00-740-9834 | PIN: boom jack, w/lockpin, olive drab [in compartment no. 3] (19207) 7409834 | 622 | 2 |

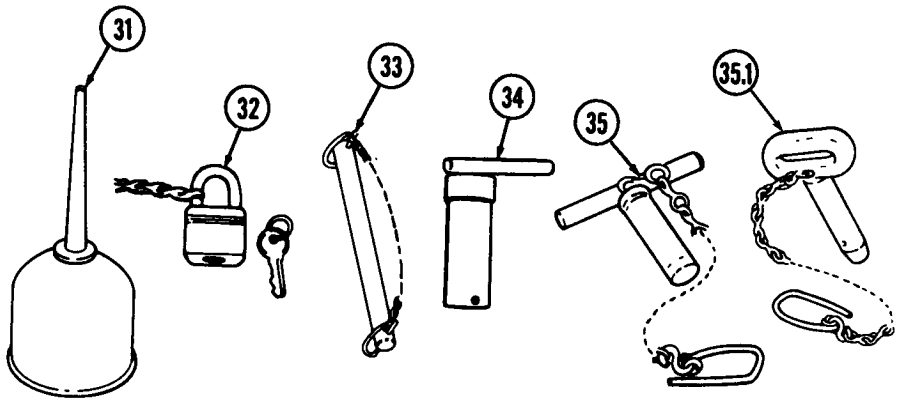

## BASIC ISSUE ITEMS (Cont'd)

| Item No. | National Stock No. | Description CAGEC and Part No. | Usable On Code | Qty. Furn. With Equip. |
|---|---|---|---|---|
| | | **TOOLS AND EQUIPMENT — MEDIUM WRECKER (M816) (Cont'd)** | | |
| 36. | 5315-00-839-5822 | PIN: cotter, 1 in. long [in toolbag] (96906) MS24665-353 | 622 | 3 |
| 37. | 5315-00-209-7979 | PIN: shear, 3/8 in. dia., 2-5/8 in. long [in toolbag] (19207) 7409348 | 622 | 3 |
| 38. | 5315-00-282-2583 | PIN: shear, grooved, headed, 5/8 in. dia., 3-1/2 in. long [in toolbag] (19207) 8330478 | 622 | 3 |
| 39. | 5120-00-293-0448 | PUNCH: drift, 3/16 in. dia., 3/8 in. stk, 8 in. long [in toolbag] (81348) GGG-P-831 | 622 | 1 |
| 40. | 4030-00-318-0326 | SHACKLE: assembly, anchor, 7/8 in. dia., olive drab finish [in compartment no. 2] (19207) 7357967 | 622 | 2 |
| 41. | 5120-00-293-3336 | SHOVEL: round point, D-handle, open-back [in compartment no. 3A] (19207) 11655784 | 622 | 1 |

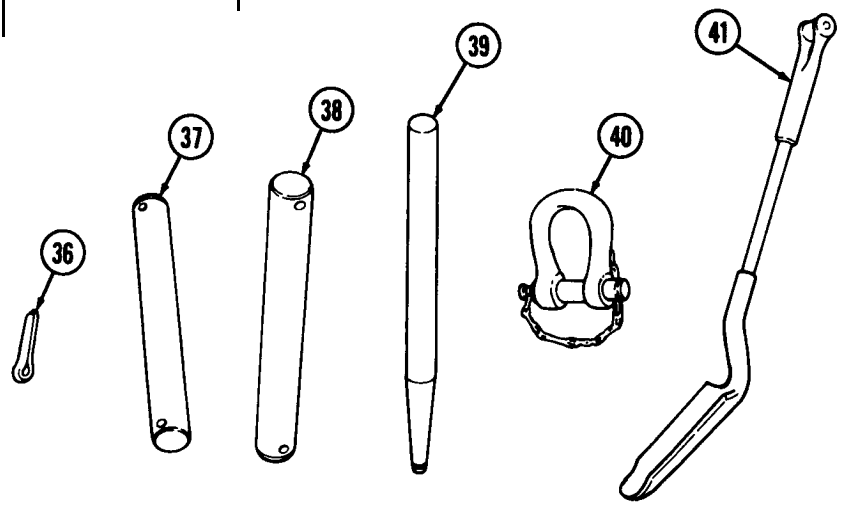

## BASIC ISSUE ITEMS (Cont'd)

| Item No. | National Stock No. | Description CAGEC and Part No. | Usable On Code | Qty. Furn. With Equip. |
|---|---|---|---|---|
| | | **TOOLS AND EQUIPMENT — MEDIUM WRECKER (M816) (Cont'd)** | | |
| 42. | 3940-00-265-7125 | SLING: chain, 2 leg w/ring, w/2 hooks, 5/8 in. chain, 125 in. length of legs [in compartment no. 1] (81349) MILS52432 | 622 | 1 |
| 43. | 3940-00-040-2297 | SLING: wire rope, double leg w/ring, w/2 hook ends (19207) 8330151 | 622 | 1 |
| 44. | 5340-00-543-3034 | STRAP: webbing, 1-1/2 in. wide x 24 in. long, w/buckle [to stow canopy in bracket forward of spare tire] (19207) 8690516 | 622 | 2 |
| 45. | 5180-00-754-0661 | TOOLKIT: welder's [in compartment no. 3B] (50980) SC 5180-90-N39 | 622 | 1 |
| 46. | 3433-00-357-6311 | TORCH OUTFIT: cutting and welding [in compartment no. 3B] (50980) SC 3433-90-CL-N01 Lin W67706 | 622 | 1 |
| 47. | 4910-01-365-9304 | TOWBAR: motor vehicle, wheeled (see TM 9-4910-593-12&P) [in compartment no. 4] (59678) 7551383 | 622 | 1 |

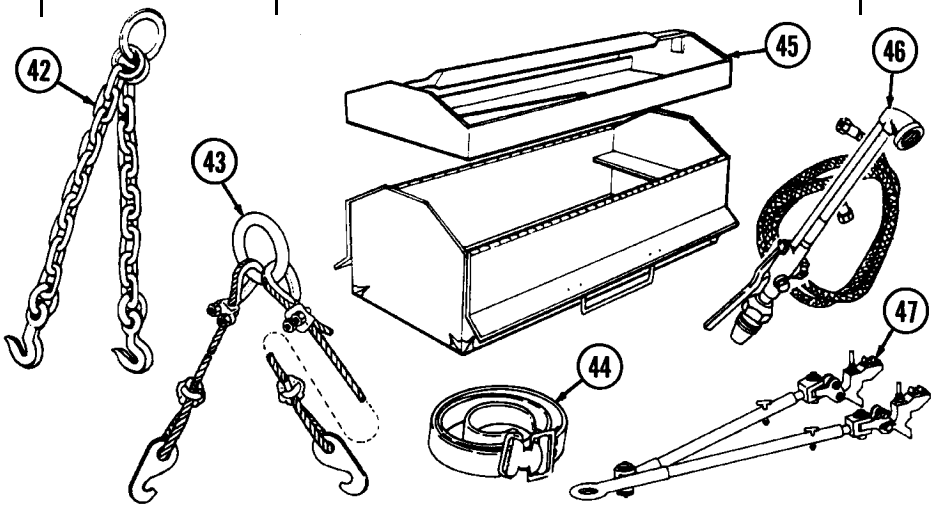

## BASIC ISSUE ITEMS (Cont'd)

| Item No. | National Stock No. | Description CAGEC and Part No. | Usable On Code | Qty. Furn. With Equip. |
|---|---|---|---|---|
| | | **TOOLS AND EQUIPMENT — MEDIUM WRECKER (M816) (Cont'd)** | | |
| 47.1. | 2590-01-436-9145 | TOW LIGHTAND CABLE ASSEMBLY: [tow light storage box] (19207) 12450235 | 622 | 1 |
| 48. | 2540-00-040-2301 | TUBE: boom jack, bottom [assembled and stored on left deck] (19207) 8330158 | 622 | 2 |
| 49. | 4710-00-040-2300 | TUBE: boom jack, top [assembled and stored on left deck] (19207) 8330157 | 622 | 2 |
| 50. | 5120-00-243-9072 | VISE: bench and pipe, swivel base, 5 in. stationary jaw, w/1/8 in. to 4 in. pipe jaw [mounted on vehicle front bumper] (81348) GGG-V-410 | 622 | 1 |
| 51. | | Deleted | | |
| 52. | 5120-00-264-3793 | WRENCH: auto., adjustable, 0 in. to 3-5/8 in. jaw opening, 15 in. long [in toolbag, in toolbox] (24617) 2117080 | 622 | 1 |

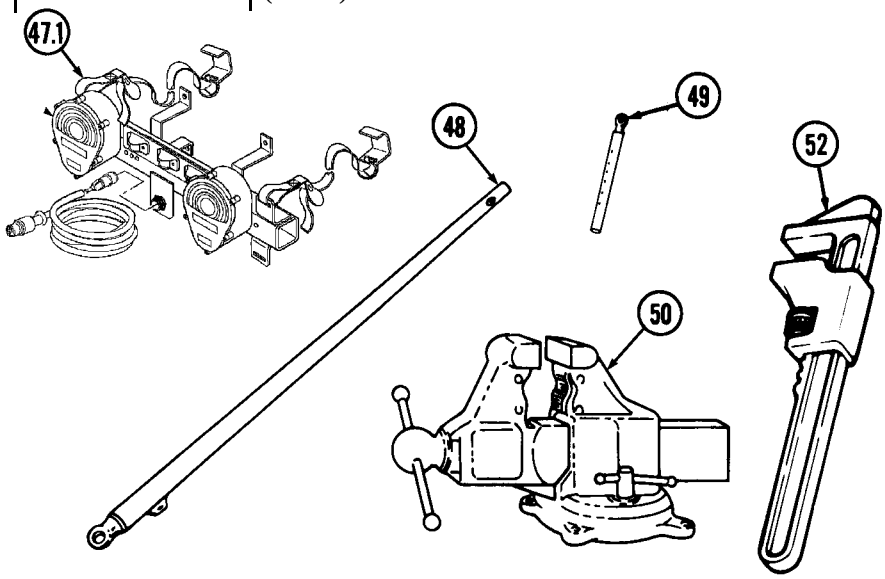

## BASIC ISSUE ITEMS (Cont'd)

| Item No. | National Stock No. | Description<br>CAGEC and Part No. | Usable On Code | Qty. Furn. With Equip. |
|---|---|---|---|---|
| | | **TOOLS AND EQUIPMENT — MEDIUM WRECKER (M816) (Cont'd)** | | |
| 53. | 5120-00-277-1244 | WRENCH: open end, fixed, single head, 15 degree head angle, 1-5/8 in. opening, 14-7/8 in. long [in toolbag, in toolbox] (03914) 31-052 | 622 | 1 |
| 54. | 5120-00-277-1245 | WRENCH; open end, fixed single head, 15 degree head angle, 1-11/16 in. opening, 14-7/8 in. long [in toolbag, in toolbox] (19207) TKBX3A | 622 | 1 |
| 55. | 5120-00-277-1242 | WRENCH: open end, fixed single head, 15 degree head angle, 1-13/16 in. opening, 16-3/8 in. long [in toolbag, in toolbox] (19207) 6012498 | 622 | 1 |
| 56. | 5120-00-277-1461 | WRENCH: pipe, heavy duty, adjustable, 1 in. to 2 in. pipe capacity, 18 in. long [in toolbox] (21450) 41W664 | 622 | 1 |

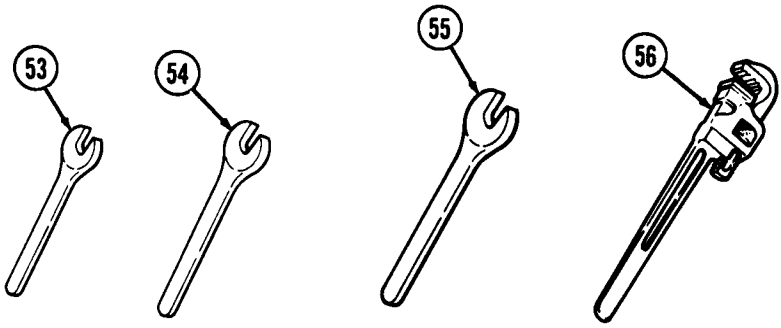

## BASIC ISSUE ITEMS (Cont'd)

| Item No. | National Stock No. | Description<br>CAGEC and Part No. | Usable On Code | Qty. Furn. With Equip. |
|---|---|---|---|---|
| | | **TOOLS AND EQUIPMENT — TRACTOR, WRECKER TRUCK (M819)** | | |
| 1. | 5110-00-293-2336 | AX: single bit, 4 lb hd. wt., 4-3/4 in. cutting edge, 35-1/2 in.-36-1/2 in. long [in bracket 2346922 on right side of body] (19207) 6150925 | 636 | 1 |
| 2. | 3040-00-860-2359 | BAR: cranking, outrigger, 1 in. dia., 12 in. long [one in compartment no. 6, and one in compartment no. 7] (19207) 10900233 | 636 | 2 |
| 3. | 2520-00-040-2298 | BAR: tie, boom jacks, w/yoke ends [in brackets on front deck, below crane cab — left side] (19207) 8330152 | 636 | 1 |
| 4. | 3830-00-625-6284 | BASE: outrigger and boom jack [clamped on front deck, right and left side] (19207) 8333068 | 636 | 2 |
| 5. | 2590-00-101-5594 | BOOM: stabilizer, lower (male) [on boom and deck during transit: on boom storage right and left side] (19207) 10910347 | 636 | 2 |
| 6. | 3830-00-625-6283 | BOOM: stabilizer, upper (female) [on boom and deck during transit: on boom stowage right and left side] (19207) 8331883 | 636 | 2 |
| 6.1. | 2540-01-373-0088 | BOX: assembly, stowage, accessories storage [in compartment no. 1A and 2A] (19207) 12375821 | 636 | 1 |
| 6.2. | 6150-01-027-0125 | CABLE: assembly, battery booster cables, [in compartment 1A] (19204) 7550899 | 636 | 1 |

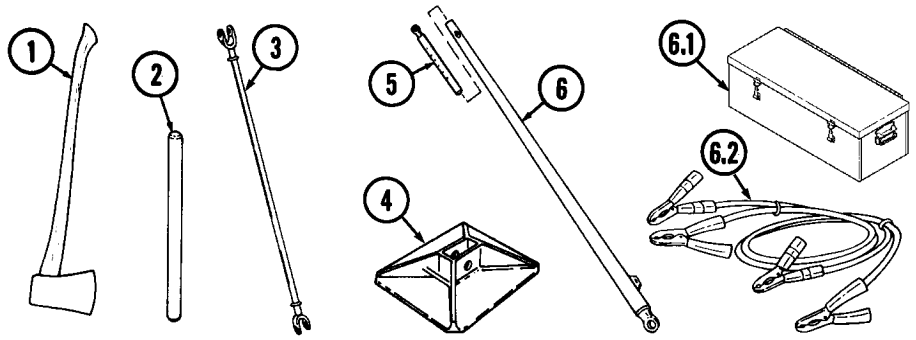

## BASIC ISSUE ITEMS (Cont'd)

| Item No. | National Stock No. | Description FSCM and Part No. | Usable On Code | Qty. Furn. With Equip. |
|---|---|---|---|---|
| | | **TOOLS AND EQUIPMENT – TRACTOR, WRECKER TRUCK (M819) (Cont'd)** | | |
| 7. | 2540-00-933-6922 | CHAIN: tire. pneumatic, truck. single, type T-S. [2:00 x20 [in compartment at front of body center] (96906) MS500055-24 | 636 | 3 |
| 8. | 5340-00-929-1794 | CLAM P: [to attach intervehicular harness and air connection hose on support hitch hiker] (96906) MS21334-31 | 636 | 5 |
| 9. | 5315-00-281-7745 | CLIP: boom jack tie bar [in position in pin] (19207) 8330153 | 636 | 2 |
| 10. | 5315-00-281-7744 | CLIP: pin adjust, tube boom jack and boom stabilizer [in position in pin] (19207) 7409515 | 636 | 4 |
| 11. | 5315-00-398-0995 | CLIP: pin. boom jacks [in position in pin] (19207) 8330154 | 636 | 1 |
| 12. | 5315-00-692-6136 | CLIP: pin, boom jacks and shipper stabilizer [in position in pin] (19207) 8332593 | 636 | 6 |

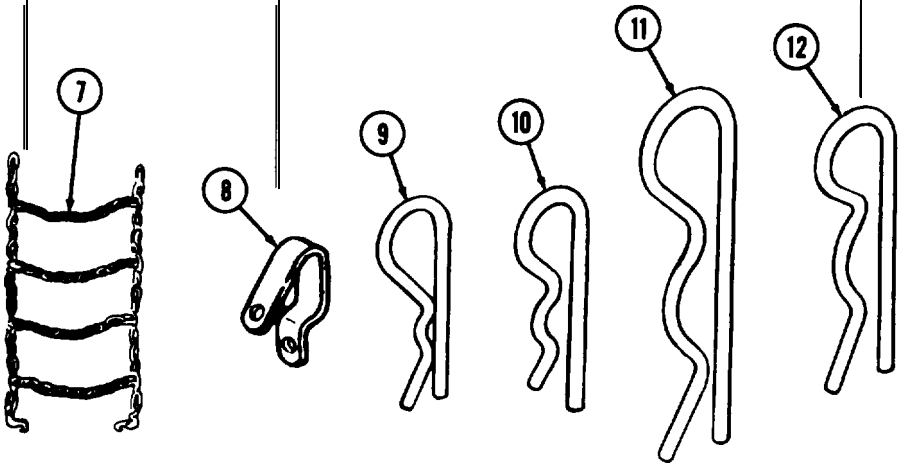

BASIC ISSUE ITEMS (Cont'd)

| Item No. | National Stock No. | Description FSCM and Part No. | Usable On Code | Qty. Furn. With Equip. |
|---|---|---|---|---|
| | | **TOOLS AND EQUIPMENT — TRACTOR, WRECKER TRUCK (M819) (Cont'd)** | | |
| 13. | 5340-00-740-9782 | COLLAR: boom stabilizer tube cross pin [on boom] (19207) 7409782 | 636 | 1 |
| 14. | 4030-00-321-6405 | FASTENER: (used w/clips 7405915 and 8332593) [in position on clips] (19207) 8330246 | 636 | 8 |
| 15. | 5340-00-321-6407 | FASTENER: (used w/clip 8330153) [in position on clip] (19207) 8330328 | 636 | 2 |
| 16. | 5340-00-321-6406 | FASTENER: (used w/clip 8330154) [in position on clip] (19207) 8330327 | 636 | 1 |
| 17. | 6545-00-922-1200 | FIRST-AID KIT: general purpose [compartment no. 1, right rear of crew seat] (19207) 11677011 | 636 | 1 |
| 18. | 5120-00-288-6574 | HANDLE: mattock/pick, RR or clay pick, 36 in. long [in compartment no. 3A] (19207) 11677021 | 636 | 1 |

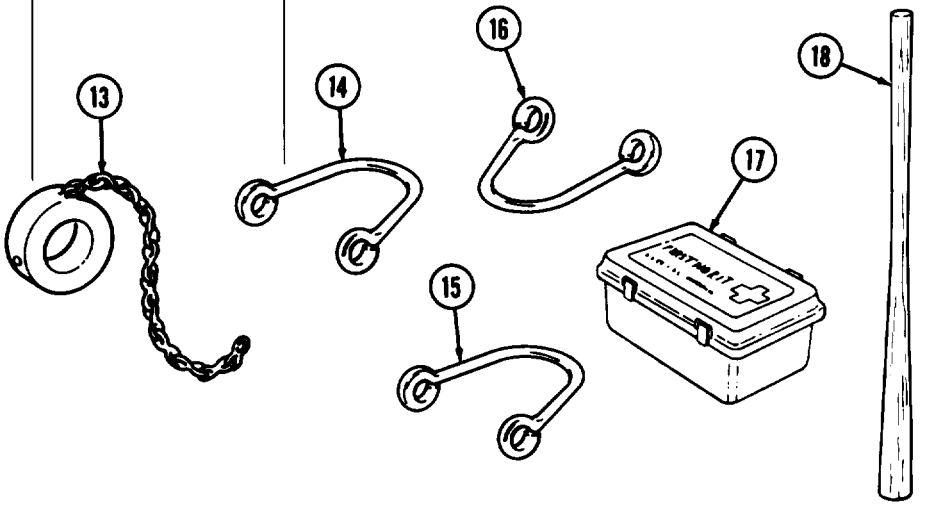


TA 094503

## BASIC ISSUE ITEMS (Cont'd)

| Item No. | National Stock No. | Description<br>CAGEC and Part No. | Usable On Code | Qty. Furn. With Equip. |
|---|---|---|---|---|
| | | **TOOLS AND EQUIPMENT — TRACTOR, WRECKER TRUCK (M819) (Cont'd)** | | |
| 19. | 6150-00-772-8814 | HARNESS: intervehicular, electric, 144 in. long, w/plug [on support (hitch-hiker, on left side of body] (19207) 7728814 | 636 | 1 |
| 20. | 4720-00-740-9662 | HOSE: air connecting, intervehicular, 10-1/2 ft long, w/2 glad hand couplings [in compartment no. 3B] (96906) MS39325-9-126-B | 636 | 2 |
| 21. | 2590-00-148-7961 | KIT: intervehicle power cable, 24 volt, 20 ft long, w/2 adapters (NATO SLAVE) [in compartment no. 2] (19207) 11682379-1 | 636 | 1 |
| 22. | 5120-00-243-2395 | MATTOCK: pick, w/o handle, 5 lb [in compartment no. 3A] (19207) 11677022 | 636 | 1 |
| 23. | 5310-00-689-3877 | NUT: self-locking, non-metallic insert, no. 10-24 UNC-2B [to attach intervehicular harness and air connection on support (hitch-hiker)] (96906) MS17829-3C | 636 | 5 |
| 24. | 3830-00-625-6281 | PIN: adjust, tube boom stabilizer [in position on boom] (19207) 7066034 | 636 | 2 |

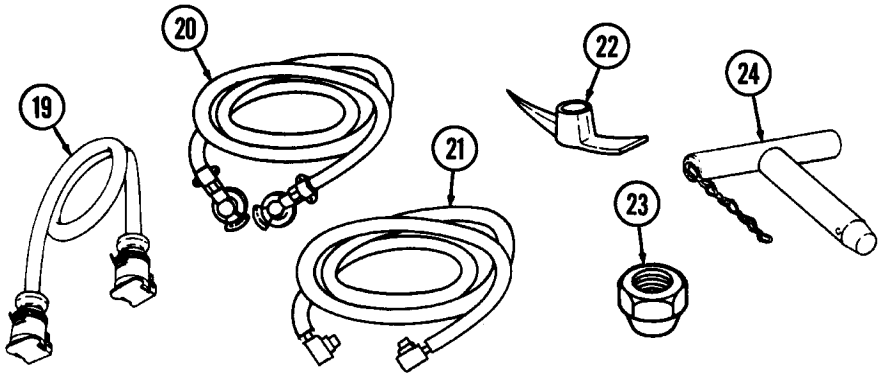

## BASIC ISSUE ITEMS (Cont'd)

| Item No. | National Stock No. | Description CAGEC and Part No. | Usable On Code | Qty. Furn. With Equip. |
|---|---|---|---|---|
| | | **TOOLS AND EQUIPMENT — TRACTOR, WRECKER TRUCK (M819) (Cont'd)** | | |
| 25. | 5315-00-740-9834 | PIN: boom jack, w/lockpin, olive drab [in compartment no. 3] (19207) 7409834 | 636 | 2 |
| 26. | 5315-01-220-3163 | PIN: boom stabilizer, boom jack and rear outriggers [in position] (19207) 7409829-1 | 636 | 4 |
| 27. | 5315-00-052-0110 | PIN: retaining, boom jack, upper [in compartment at front of body center] (19207) 10899366 | 636 | 1 |
| 28. | 5315-00-316-1008 | PIN: retaining, tie-bar yoke, w/lockpin, olive drab [in compartment no. 3] (19207) 8327939 | 636 | 2 |
| 29. | 4710-00-077-1957 | PIPE: end, shift tube [in compartment at front of body center] (19207) 8333069 | 636 | 2 |
| 30. | 4730-00-221-2141 | PLUG: pipe, 1 in. sq. hd., zinc or cad. plated steel [in toolbag] (96906) MS20913-8S | 636 | 2 |
| 31. | 5305-00-984-6212 | SCREW: [to attach intervehicular harness and air connection hose on support (hitch-hiker)] (96906) MS35206-265 | 636 | 5 |

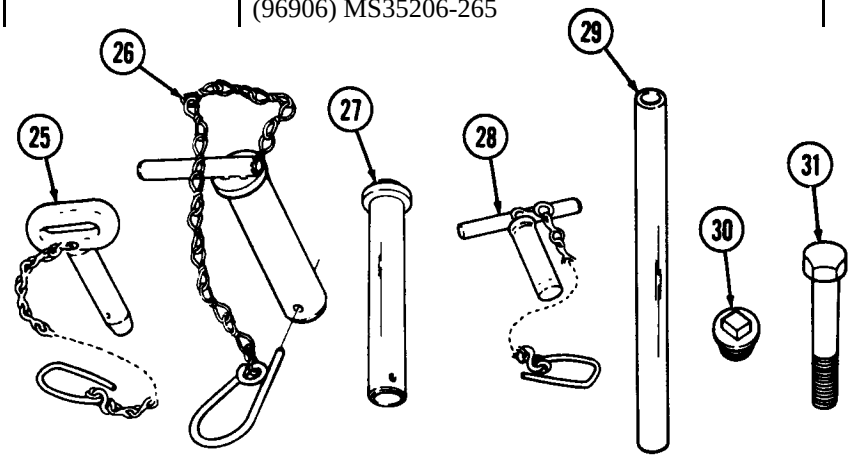

## BASIC ISSUE ITEMS (Cont'd)

| Item No. | National Stock No. | Description CAGEC and Part No. | Usable On Code | Qty. Furn. With Equip. |
|---|---|---|---|---|
| | | **TOOLS AND EQUIPMENT — TRACTOR, WRECKER TRUCK (M819) (Cont'd)** | | |
| 32. | 5120-00-293-3336 | SHOVEL: hand, round point, D-handle, short size 2, olive drab [in compartment no. 3A] (19207) 11655784 | 636 | 1 |
| 33. | 3940-00-040-2297 | SLING: wire rope, 2 leg w/ring w/2 hooks [boom hook to rear of vehicle] (19207) 8330151 | 636 | 1 |
| 34. | 5340-00-664-0364 | STRAP: webbing, 1 in. width, 26 in. long, long, w/buckle [on tubes, boom jack, in stowed position] (19207) 8690469 | 636 | 2 |
| 34.1. | 2590-01-436-9145 | TOW LIGHTAND CABLE ASSEMBLY: [tow light storage box] (19207) 12450235 | 622 | 1 |
| 35. | 3830-00-625-6286 | TUBE: boom, extension shift [in compartment at front of body center] (19207) 8333070 | 636 | 1 |
| 36. | 4710-00-040-2301 | TUBE: boom jack, bottom [in brackets on front deck below crane cab, left side] (19207) 8330158 | 636 | 2 |
| 37. | 2590-00-443-0065 | TUBE: boom jack, top [in brackets on front deck below crane cab, left side] (19207) 8333072 | 636 | 2 |

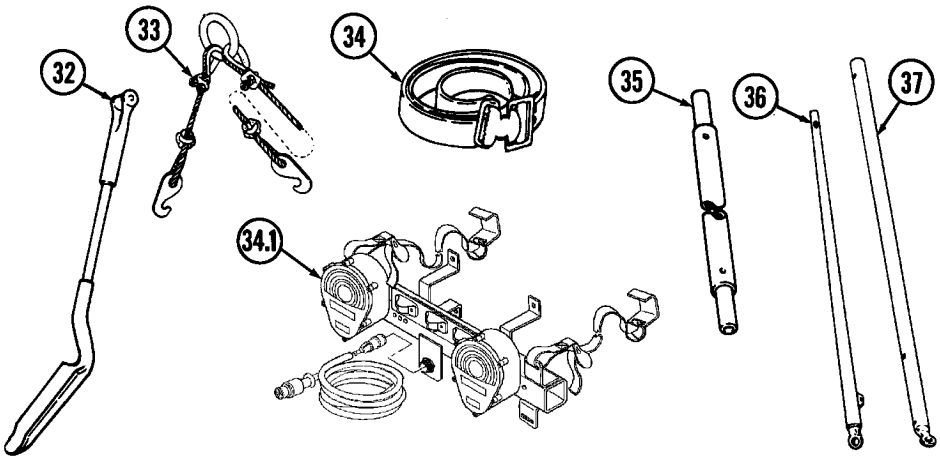

## BASIC ISSUE ITEMS (Cont'd)

| Item No. | National Stock No. | Description<br>FSCM and Part No. | Usable On Code | Qty. Furn. With Equip. |
|---|---|---|---|---|
| | | **TOOLS AND EQUIPMENT — TRACTOR, WRECKER TRUCK (M819) (Cont'd)** | | |
| 38. | 5120-00-277-1244 | WRENCH: open end, fixed, single head, 15 degree head angle, 1-5/8 in. opening, 14-7/8 in. long [in toolbag, in toolbox] (03914) 31-052 | 636 | 1 |
| 39. | 5120-00-277-1245 | WRENCH; open end, fixed single head, 15 degree head angle, 1-11/16 in. opening, 14-7/8 in. long [in toolbag, in toolbox] (19207) TKBX3A | 636 | 1 |
| 40. | 5120-00-277-1242 | WRENCH: open end, fixed single head, 15 degree head angle, 1-13/16 in. opening, 16-3/8 in. long [in toolbag, in toolbox] (19207) 6012498 | 636 | 1 |
| 41. | 5120-00-277-1461 | WRENCH: pipe, heavy duty, adjustable, 1 in. to 2 in. pipe capacity, 18 in. long [in toolbox] (21450) 41W664 | 636 | 1 |

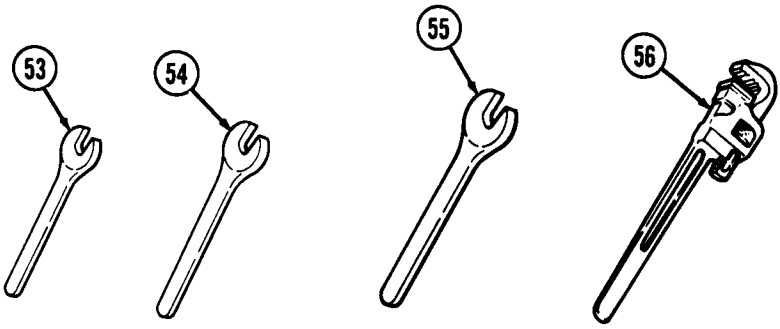

## BASIC ISSUE ITEMS (Cont'd)

| Item No. | National Stock No. | Description CAGEC and Part No. | Usable On Code | Qty. Furn. With Equip. |
|---|---|---|---|---|
| | | **TOOLS AND EQUIPMENT — EXPANSIBLE VANS (M820, M820A1, AND M820A2)** | | |
| 1. | 5110-00-293-2336 | AX: single bit, 4 lb head, 31 in. handle [pioneer tool bracket] (19207) 6150925 | 630,631, 632 | 1 |
| 2. | 6150-00-134-0848 | CABLE: electrical auxiliary, 39-1/4 in. long [on ceiling front left side of body] (19207) 11601641 | 630,631, 632 | 1 |
| 3. | 6140-00-851-4573 | CABLE: ground, 48 in. long, (used w/rod 8380403) [in compartment above left running board] (19207) 7017575 | 630,631, 632 | 1 |
| 4. | 3950-00-870-9939 | COVER: cable reel, cotton duck [over power cable and reel, right rear of van] (19207) 8735021, or 8735021-1 (tan) or 8735021-2 (white) | 630,631, 632 | 1 |
| 5. | 5120-00-061-8546 | HAMMER: hand machinist, ball peen, 2 lb., 15 in. to 17 in. lg, type II, class 1, style A [in toolbag] (81348) GGG-H-86 | 630,631, 632 | 1 |
| 5.1. | 6150-00-134-0847 | CABLE: electrical, jumper 600V, 100 ft lg, w/couplings (on reel, right rear of van) (19207) 11601643 | 630,631, 632 | 1 |

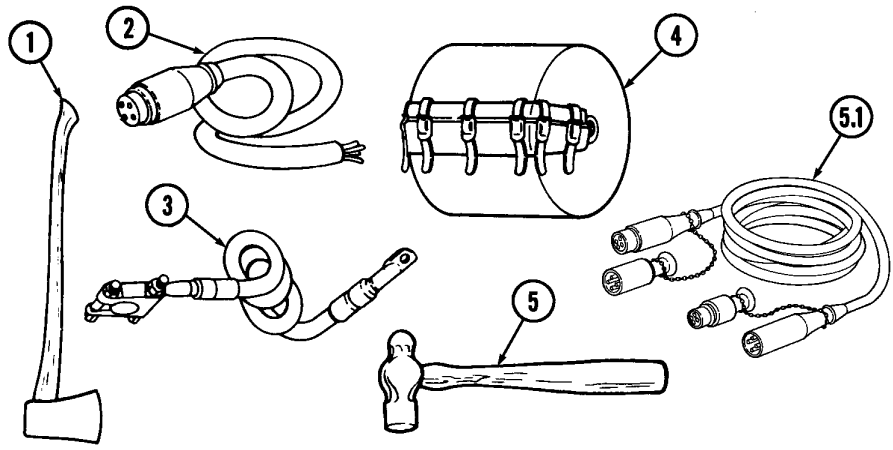

## BASIC ISSUE ITEMS (Cont'd)

| Item No. | National Stock No. | Description CAGEC and Part No. | Usable On Code | Qty. Furn. With Equip. |
|---|---|---|---|---|
| | | **TOOLS AND EQUIPMENT — EXPANSIBLE VANS (M820, M820A1, AND M820A2) (Cont'd)** | | |
| 6. | 2590-00-924-0052 | HANDLE: extension assembly [rear exterior compartment] (19207) 10896943 | 630,631, 632 | 2 |
| 7. | 5120-00-288-6574 | HANDLE: mattock-pick, railroad or clay pick [in compartment no. 3A] (19207) 11677021 | 630,631, 632 | 1 |
| 8. | 5120-00-566-0617 | JACK: leveling vehicle, portable [rear exterior compartment or bracket] (19207) 7534672 | 630,631, 632 | 4 |
| 9. | 2540-01-098-5079 | LADDER: assembly, vehicle boarding, 4 ft long [on rear doors (M820, M820A1); on hydraulic liftgate (M820A2)] (19207) 8759434 | 630,631 632 | 2 |
| 10. | 5120-00-243-2395 | MATTOCK: pick, 5 lb, w/o handle [in compartment no. 3A] (19207) 11677022 | 630,631, 632 | 1 |

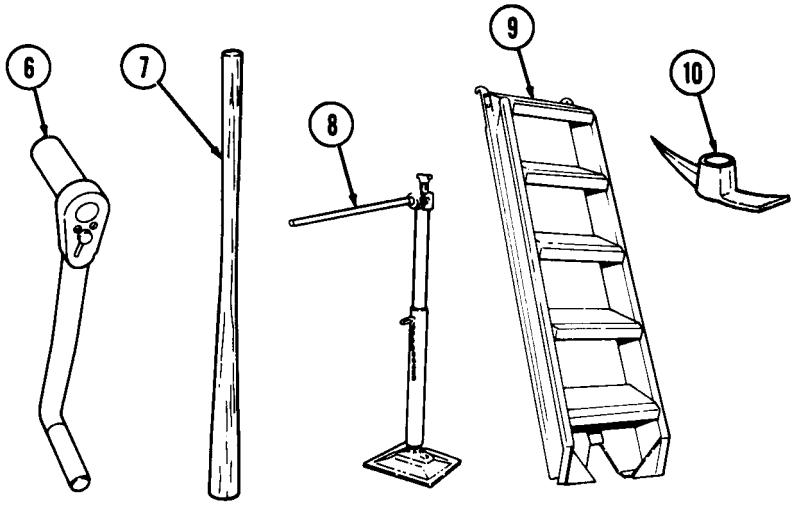

## BASIC ISSUE ITEMS (Cont'd)

| Item No. | National Stock No. | Description<br>CAGEC and Part No. | Usable On Code | Qty. Furn. With Equip. |
|---|---|---|---|---|
| | | **TOOLS AND EQUIPMENT — EXPANSIBLE VANS (M820, M820A1, AND M820A2) (Cont'd)** | | |
| 11. | 2510-00-790-2296 | ROD: ground, 3/4 in. dia., 30 in. long, w/crossbar (used w/cable 7017575) [in tool compartment above left running board] (19207) 8380403 | 630,631, 632 | 1 |
| 12. | 5120-00-293-3336 | SHOVEL: hand, round point, D-handle, short size 2, olive drab [in compartment no. 3A] (19207) 11655784 | 630,631, 632 | 1 |
| 13. | 2590-00-870-9936 | SPIKE: assembly, welded construction [in rear exterior compartment] (19207) 7534689 | 630,631, 632 | 8 |
| 14. | 5120-00-650-7829 | WRENCH: socket, 90 degree offset, 1/2 in. square opening [stowed on interior or rear door, left hand side] (19207) 8380406 | 630,631, 632 | 1 |
| 15. | 5120-00-650-7830 | WRENCH: ratchet, reversible w/removable socket, 1 in. square drive [stowed on interior of rear door, left hand side] (19207) 7759181 | 630,631, 632 | 1 |

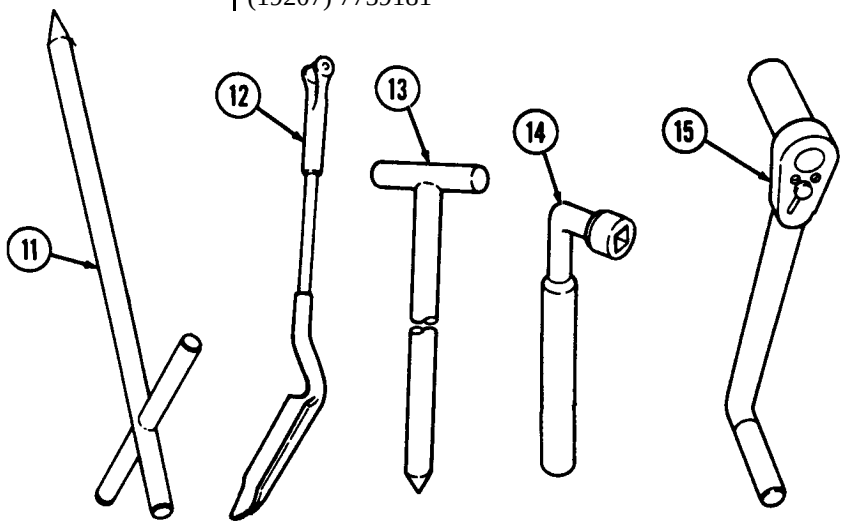

# APPENDIX C
# ADDITIONAL AUTHORIZATION LIST

## INTRODUCTION

## C-1. SCOPE

This appendix lists additional items you are authorized for the support of the 5-ton, 6x6, M809 series trucks.

## C-2. GENERAL

This list identifies items that do not have to accompany the truck and that do not have to be turned in with it. These are authorized to you by CTA, MTOE, TDA, or JTA.

## C-3. EXPLANATION OF LISTING

National stock numbers, descriptions, and quantities are provided to help you identify and request the additional items you require to support this equipment. If item required differs for different models of this equipment, the model and the assigned usable on code is shown. These codes are identified as:

| MODEL | USABLE ON CODE | MODEL | USABLE ON CODE |
|---|---|---|---|
| M809 w/w | 612 | M814 w/w | 628 |
| M809 wo/w | 613 | M814 wo/w | 629 |
| M809A1 w/w | 615 | M815 w/w | 614 |
| M810 w/w | 623 | M816 w/w | 622 |
| M811 w/w | 616 | M817 wo/w | 627 |
| M811 wo/w | 639 | M818 w/w | 634 |
| M811A1 w/w | 617 | M818 wo/w | 635 |
| M811A2 w/w | 618 | M819 w/w | 636 |
| M812 | 619 | M820 wo/w | 630 |
| M812A1 w/w | 621 | M820A1 wo/w | 631 |
| M813 w/w | 625 | M820A2 wo/w (W/HLG) | 632 |
| M813 wo/w | 626 | M821 wo/w | 620 |
| M813A1 w/w (Dropside) | 637 | | |
| M813A1 wo/w (Dropside) | 638 | | |

## ADDITIONAL AUTHORIZATION LIST (Cont'd)

| NATIONAL STOCK NUMBER | DESCRIPTION CAGEC AND PART NO. | USABLE ON CODE | U/M | QTY AUTH |
|---|---|---|---|---|
| 5935-00-322-8959 | ADAPTER: connector, coaxial slave cable connector to 2 pin vehicle receptacle [in tool compartment, right side behind cab. Compartment no. 2 for M816] (19207) 11677570 | All | EA | 1 |
| 3940-00-105-9933 | BLOCK: snatch, 5/8 in. dia. wire rope, single 8 in. sheave, w/swivel hook, 10-ton capacity (19207) 11631726 | All | EA | 1 |
| 3940-00-926-3710 | BLOCK: tackle, manila rope, 1 in. dia., steel shell 8 in. long, w/single 4-1/2 in. sheave, w/loose side hook, rig no. 10, w/becket and thimble, 3300 lb capacity [M819: in compartment at front of body center, M816: in compartment no. 3A] (81348) GGGB490 | 622,636 | EA | 1 |
| 3940-00-926-3719 | BLOCK: tackle, manila rope, 1 in. dia. steel shell 8 in. long w/double 4-1/2 in. sheave, w/loose side hook, rig no. 10, w/becket and thimble, 5100 lb capacity [M819: in compartment at front of body center, M816: in compartment no. 3A] (81348) GGG-B-490 | 622,636 | EA | 1 |
| 6150-01-022-6004 | CABLE: and plug assembly intervehicle power cable, 24 volt, 20 ft long (NATO SLAVE) (19207) 11682336-1 | All commander discretion | EA | 1 |
| 7240-00-177-6154 | CAN: gasoline, military type, 5 gallon [in bracket on left running board] (19207) 11677020 | All | EA | 1 |
| 7240-00-089-3827 | CAN: water, military type, 5 gallon [M819: in bracket on right side of compartment at front of body, M816: in bracket on front of hydraulic oil reservoir] (56161) 10502791 | All | EA | 1 |
| 5140-00-860-2354 | CASE: crosscut-saw, cotton duck, 63-3/4 in. long [in compartment no. 3A] (19207) 10876420 | 622 | EA | 1 |
| 2540-00-933-9022 | CHAIN: assembly, tire, single, type TS, size 11.00 x 20 [in tool compartment, right side, behind cab] (96906) MS500055-22 | All except 622,636 | 3PR | 1 |

## ADDITIONAL AUTHORIZATION LIST (Cont'd)

| NATIONAL STOCK NUMBER | DESCRIPTION CAGEC AND PART NO. | USABLE ON CODE | U/M | QTY AUTH |
|---|---|---|---|---|
| 2540-00-933-9033 | CHAIN: pneumatic tire, truck, single tire, type TS, 14.00 x 20 [in tool compartment behind cab] (96906) MS500055-27 | All except 622 and 636 | 1 PR | 1 |
| 4010-00-473-6166 | CHAIN: utility, single leg, 5/8 in. link, 16 ft long, w/grab hook and 2 pear-shaped end links [in tool compartment, right side, behind cab] (19207) 7077063 | All | EA | 1 |
| 2540-00-678-3469 | CHOCK: wheel, w/68 in. chain, [in tool compartment, right side, behind cab] (19207) 7979235 | All | EA | 2 |
| 4230-00-720-1618 | DECONTAMINATIONAPPARATUS: portable, DS-2, 1-1/2 qt, ABC-MII, w/bracket (81361) D5-51-269 | All | EA | 1 |
| 4210-01-189-6452 | EXTINGUISHER: fire, hand, 5 lb., dry chemical, stored pressure, w/bracket (19207) 12255633-3 | All except 622, 630,631,632, 634,635,636 | EA | 1 |
| 6230-00-295-2194 | FLASHLIGHT: [in toolbag] type 1, style 2 (81349) MIL-F-3747 | All | EA | 1 |
| 5340-01-379-6120 | HANDLE: safety, bow [mounted to reservoir straps] (19207) 12432253 | 622 | EA | 1 |
| 6240-01-447-3779 | LAMP: incandescent, S8 bulb, S contact, bayonet base, 28V [in extension light] (81348) A-A-52463-210 | 622,636 | EA | 1 |
| 6230-00-498-9408 | LANTERN: electric, hand, 6 volt, w/lamp (2), w/o battery, O.D. finish [M819: in tool compartment, M816: in compartment no. 2] (56161) 10501983 | 622,636 | EA | 1 |
| 4020-00-231-2581 | ROPE: manila, 3-strand, 3/8 in. dia., 1-1/8 in. circumference, 50 ft long, 325 lb safe work cap. [M819: in compartment at front of body center, M816: in compartment no. 3A] type M, class 2 (81348) TR605 | 622,636 | EA | 1 |
| 4020-00-238-7734 | ROPE: manila, 3-strand, 3/4 in. dia., 2-1/4 in. circumference, 100 ft long, 1350 lb safe work cap. [M819: in compartment at front of body center, M816: in compartment no. 3A] type M, class 2 (81348) TR605 | 622,636 | EA | 1 |

## ADDITIONAL AUTHORIZATION LIST (Cont'd)

| NATIONAL STOCK NUMBER | DESCRIPTION CAGEC AND PART NO. | USABLE ON CODE | U/M | QTY AUTH |
|---|---|---|---|---|
| 4020-00-231-9014 | ROPE: manila, 3-strand, 1 in. dia., 3 in. circumference, 300 ft long, 2250 lb safe work capacity [M819: in compartment at front of body center, M816: in compartment no. 3A] type M, class 2 (81348) TR605 | 622,636 | EA | 1 |
| 5110-01-144-5349 | SAW: crosscut, 1-man, 4-1/2 ft long blade, 5 ft overall, w/supplementary handle [in compartment no. 3A] (96906) MS16515-2 | 622 | EA | 1 |
| 7240-00-177-6154 | SPOUT: can, gasoline, flexible nozzle, 1-1/4 in. outside diameter, 16 in long [in tool compartment, right side, at step] (19207) 11677020 | All | EA | 1 |
| 1670-00-725-1437 | TIEDOWN: cargo strap, aircraft (81349) MIL-T-27260 TYPECGU1B | All except 622,636 | EA | 1 |

# APPENDIX D

# EXPENDABLE/DURABLE SUPPLIES AND MATERIALS LIST

## INTRODUCTION

### D-1. SCOPE

This appendix lists expendable/durable supplies and materials you will need to operate and maintain M809, 5-ton, 6x6, trucks. These items are authorized to you by CTA 50-970, Expendable Items (except medical, class V, repair parts, and heraldic items).

### D-2. EXPLANATION OF COLUMNS

**a. Column (1) - Item Number.** This number is assigned to the entry in the listing and is referenced in the narrative instructions to identify the material (e. g., "Use cross chain, item 8, app. D").

**b. Column (2) - Level.** This column identifies the lowest level of maintenance that requires the listed item.

C — Operator/Crew
O — Organizational Maintenance

**c. Column (3) - National Stock Number.** This is the national stock number assigned to the item: use it to request or requisition the item.

**d. Column (4) - Description.** Indicates the Federal item name and, if required, a description to identify the item. The last line for each item indicates the Federal Supply Code for Manufacturer (FSCM) in parenthesis, followed by the part number.

**e. Column (5) - Unit of Measure (U/M).** Indicates the measure used in performing the actual maintenance function. This measure is expressed by a two-character alphabetical abbreviation [e. g., ea, in., pr). If the unit of measure differs from the unit of issue, requisition the lowest unit of issue that will satisfy your requirements.

## EXPENDABLE/DURABLE SUPPLIES AND MATERIALS LIST

| ITEM NO. | LEVEL | NATIONAL STOCK NO. | DESCRIPTION | U/M |
|---|---|---|---|---|
| | | | **ANTIFREEZE, PERMANENT** TYPE: arctic grade (-90° F (-68°C)) (0-1-490) (MIL-C-11755) | |
| 1 | C | 6850-00-174-1806 | 55 GAL. DRUM | GAL. |
| | | | ANTIFREEZE, PERMANENT: ethylene glycol (-65° F (-54° C)) inhibited (0-A-548, type I) heavy duty, single package | |
| 2 | C | 6850-00-181-7929 | 1 GAL. CONTAINER | GAL. |
| 3 | C | 6850-00-181-7933 | 5 GAL. CONTAINER | GAL. |
| 4 | C | 6850-00-181-7940 | 55 GAL. DRUM | GAL. |
| 5 | C | 6135-00-120-1020 | BATTERY: dry, 1.5 volt (used in flashlight) | EA |
| 6 | C | 6135-00-050-3280 | BATTERY: lantern, 6 volt (used in lantern) | EA |
| 7 | C | 2540-00-870-9939 | COVER: cable reel cotton duck 8735021 (19207) | EA |
| 8 | C | 2540-00-933-6915 | CROSS CHAIN: 11:00 x 20, single tire, MS500057-7 (96906) | EA |
| 9 | C | 2540-00-933-6915 | CROSS CHAIN: 12:00 x 20, dual tire, MS500057-7 (96906) | EA |
| 10 | C | 2540-00-933-6992 | CROSS CHAIN: 14:00 x 20, dual tire, MS500057-8 (96906) | EA |

TA 094511

## EXPENDABLE/DURABLE SUPPLIES AND MATERIALS LIST (Cont'd)

| ITEM NO. | LEVEL | NATIONAL STOCK NO. | DESCRIPTION | U/M |
|---|---|---|---|---|
| | | | GAA GREASE, AUTOMOTIVE AND ARTILLERY (MIL-G-10924) | |
| 11 | C | 9150-01-197-7688 | 2-1/4 OZ TUBE | OZ |
| 12 | C | 9150-01-197-7693 | 14 OZ CARTRIDGE | OZ |
| 13 | C | 9150-01-197-7690 | 1-3/4 LB CAN | LB |
| 14 | C | 9150-01-197-7689 | 6-1/2 LB CAN | LB |
| 15 | C | 9150-01-197-7692 | 35 LB PAIL | LB |
| 16 | C | 9150-01-197-7691 | 120 LB DRUM | LB |
| 17 | C | 2540-00-937-0404 | HOOK: swivel, 11:00 x 20, single tire, MS500059-1 (96906) | EA |
| 18 | | | DELETED | |
| 19 | | | DELETED | |
| | | | OIL, FUEL, DIESEL, DF-A: arctic (VV-F-800) | |
| 20 | | | DELETED | |
| 21 | C | 9140-00-286-5284 | 55 GAL. DRUM (16 gage) | GAL. |
| 22 | C | 9140-00-286-5285 | 55 GAL. DRUM (18 gage) | GAL. |
| 23 | C | 9140-00-286-5283 | BULK | GAL. |
| | | | OIL, FUEL, DIESEL, DF-1: winter (VV-F-800) | |
| 24 | | | DELETED | |
| 25 | C | 9140-00-286-5288 | 55 GAL. DRUM (16 gage) | GAL. |

## EXPENDABLE/DURABLE SUPPLIES AND MATERIALS LIST (Cont'd)

| ITEM NO. | LEVEL | NATIONAL STOCK NO. | DESCRIPTION | U/M |
|---|---|---|---|---|
| 26 | C | 9140-00-286-5289 | 55 GAL. DRUM (18 gage) | GAL. |
| 27 | C | 9140-00-286-5286 | BULK | GAL. |
| | | | OIL, FUEL, DIESEL, DF-2: regular (VV-F-800) | |
| 28 | | | DELETED | |
| 29 | C | 9140-00-286-5296 | 55 GAL. DRUM (16 gage) | GAL. |
| 30 | C | 9140-00-286-5297 | 55 GAL. DRUM (18 gage) | GAL. |
| 31 | C | 9140-00-286-5294 | BULK | GAL. |
| | | | OIL, LUBRICATING, GEAR: GO 80/90 (MIL-L-2105) | |
| 32 | C | 9150-01-035-5392 | 1 QT CAN | QT |
| 33 | C | 9150-01-035-5393 | 5 GAL. DRUM | GAL. |
| 34 | C | 9150-01-035-5394 | 55 GAL. DRUM (16 gage) | GAL. |
| | | | OIL, LUBRICATING, GEAR: GO 75 (MIL-L-2105) | |
| 35 | C | 9150-01-035-5390 | 1 QT | QT |
| 36 | C | 9150-01-035-5391 | 5 GAL. DRUM | GAL. |
| | | | OIL, LUBRICATING, OE/HDO 10 (MIL-L-2104) | |
| 37 | C | 9150-01-177-3988 | 1 QT CAN | QT |
| 38 | C | 9150-00-186-6668 | 5 GAL. DRUM | GAL. |
| 39 | | | Deleted | |
| 40 | C | 9150-00-191-2772 | 55 GAL. DRUM (18 gage) | GAL. |
| 41 | C | 9150-00-183-7807 | BULK | GAL. |
| | | | OIL, LUBRICATING, OE/HDO 30 (MIL-L-2104) | |
| 42 | C | 9150-01-178-4726 | 1 QT CAN | QT |
| 43 | C | 9150-00-188-9858 | 5 GAL. DRUM | GAL. |

## EXPENDABLE/DURABLE SUPPLIES AND MATERIALS LIST (Cont'd)

| ITEM NO. | LEVEL | NATIONAL STOCK NO. | DESCRIPTION | U/M |
|---|---|---|---|---|
| 44 | C | 9150-00-189-6729 | 55 GAL. DRUM (16 gage) | GAL. |
| 45 | C | 9150-00-189-6729 | 55 GAL. DRUM (18 gage) | GAL. |
| 46 | C | 9150-00-183-7808 | BULK<br>OIL, LUBRICATING, OEA (MIL-L-46167) | GAL. |
| 47 | C | 9150-00-402-4478 | 1 QT | QT |
| 48 | C | 9150-00-402-2372 | 5 GAL. DRUM | GAL. |
| 49 | C | 9150-00-491-7197 | 55 GAL. DRUM (16 gage) | GAL. |
| 50 | | Deleted | | |
| 51 | | Deleted | | |
| 52 | | Deleted | | |
| 53 | C | 6830-00-264-6751 | ACETYLENE, TECHNICAL: gas filled acetylene, 225 cu ft (to be filled locally) BB-A-106 (81348) | CF |
| 54 | C | 6830-00-292-0129 | OXYGEN, TECHNICAL: gas filled oxygen, 252 cu ft (to be filled locally) BB-O-925 (81348)<br>SOLVENT, DRYCLEANING: SD-2, type 2, FP1400 | CF |
| 55 | C | 6850-00-110-4498 | 1 PT | PT |
| 56 | C | 6850-00-274-5421 | 5 GAL. | GAL. |
| 57 | C | 6850-00-285-8011 | 55 GAL. | GAL. |
| 58 | C | 6850-00-637-6135 | BULK<br>BRAKE FLUID, SILICONE, AUTOMOTIVE, MIL-B-46176 | GAL. |

## EXPENDABLE/DURABLE SUPPLIES AND MATERIALS LIST (Cont'd)

| ITEM NO. | LEVEL | NATIONAL STOCK NO. | DESCRIPTION | U/M |
|---|---|---|---|---|
| 59 | O | 9150-01-123-3152 | 5 GAL. CAN MIL-B-46176 (81349) | GAL. |
| 60 | O | 9150-01-072-8379 | 55 GAL. DRUM MIL-B-46176 (81349) | GAL. |
| 61 | O | 9150-01-102-9455 | 1 GAL. plastic container, MIL-B-46176 (81349) | GAL. |
| 62 | C | 6850-00-926-2275 | CLEANING COMPOUND: (windshield washer) O-C-1901 (81348)<br><br>METHYLALCOHOL: methanol (O-M-232) | PT |
| 63 | C | 6810-00-597-3608 | 1 GAL. CAN | GAL. |
| 64 | C | 6810-00-275-6010 | 5 GAL. CAN<br><br>ANTIFREEZE EXTENDER, ADDITIVE, LIQUID COOLING SYSTEMS, MIL-A-53009 | GAL. |
| 65 | O | 6850-01-160-3868 | 1 QT MIL-A-53009 (81349) | QT |

# APPENDIX E
# STOWAGE AND SIGN GUIDE FOR COMPONENTS OF END ITEM, BASIC ISSUE ITEMS, AND APPLICABLE ADDITIONAL AUTHORIZATION LIST ITEMS

## E-1. SCOPE

This appendix shows the locations of stowed equipment of end item, basic issue items, and applicable additional authorization list items.

## E-2. GENERAL

The stowed equipment locater is designed to help you inventory items required for safe and efficient operation.

## E-3. STOWAGE LOCATIONS

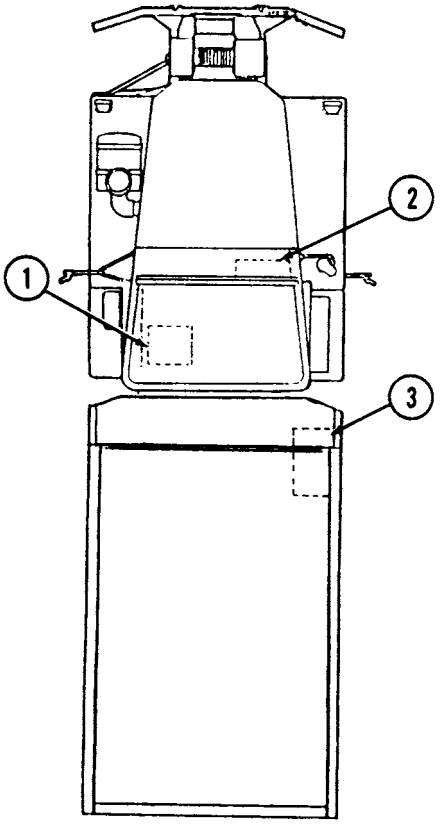


ALL VEHICLES

| Key | Location |
|---|---|
| 1 | Access step toolbox — vehicle left side [Used on M815, (614), M816 (622), M817 (633), M818 (634, 635), M819 (636), M820 (630), M820A1 (631), and M820A2 (632)]. |
| 2 | Tool compartment/access step toolbox |
| 3 | Toolbox — vehicle right side [All vehicles except M815 (614), M816 (622), M817 (633), M818 (634, 635), M819 (636), M830 (630), M820A1 (631), and M820A2 (632)]. |

## E-3. STOWAGE LOCATIONS (Cont'd)

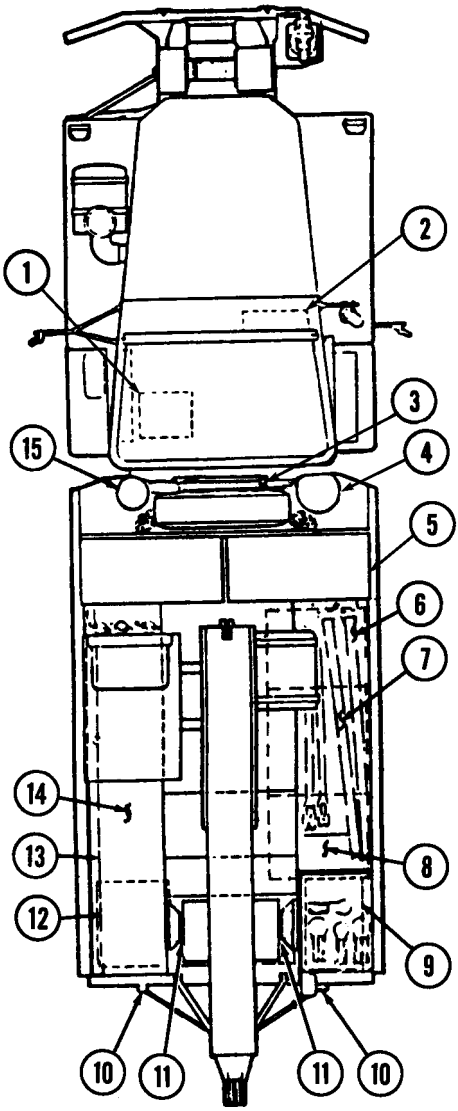


M816 MEDIUM WRECKER
(622)

| Key | Location |
|---|---|
| 1 | Tank compartment |
| 2 | Glove compartment |
| 3 | Bracket forward of spare tire |
| 4 | Acetylene cylinder |
| 5 | One compartment (2 lids) |
| 6 | Compartment no. 3A |
| 7 | Compartment no. 3B |
| 8 | Compartment no. 5 |
| 9 | Compartment no. 4 |
| 10 | Rear bumperettes |
| 11 | Bracket left and right side of rear winch |
| 12 | Compartment no. 6 |
| 13 | Compartment no. 7 |
| 14 | Left deck |
| 15 | Oxygen cylinder |

## E-3. STOWAGE LOCATIONS (Cont'd)

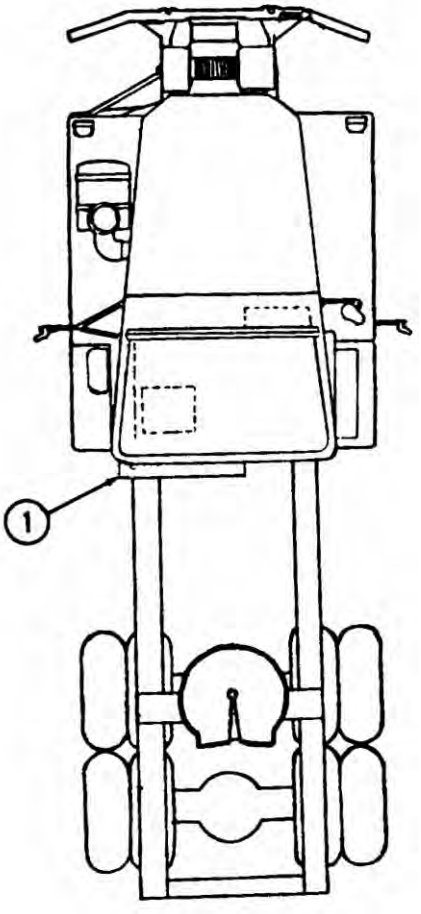


M818 TRACTOR
(634, 635)

| Key | Location |
|---|---|
| 1 | Tool compartment left rear of cab [M817 (633, 627) M818 (634, 635)] |

## E-3. STOWAGE LOCATIONS (Cont'd)

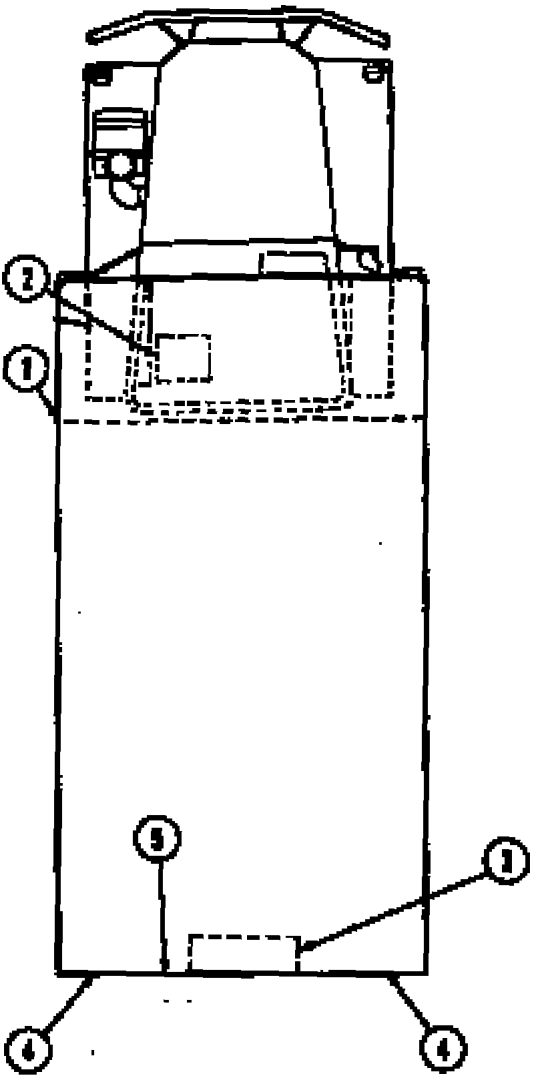


M820, M820A1, M820A2
EXPANSIBLE VANS
(630, 631, 632)

| Key | Location |
|---|---|
| 1 | Van interior ceiling compartment. |
| 2 | Access step toolbox |
| 3 | Rear exterior stowage compartment |
| 4 | Rear exterior of van body |
| 5 | Interior left side van door |

# INDEX


| | Para. | Page |
|---|---|---|
| **A** | | |
| A-frame kit: | | |
| General | 2-44a | 2-231 |
| Operating | 2-44d | 2-231 |
| Preparation for use | 2-44c | 2-231 |
| Preventive maintenance services | 2-10.1 | 2-70.26 ■ |
| Safety precautions | 2-44b | 2-231 |
| Troubleshooting | 3-9 | 3-13 |
| After operation: | | |
| In extreme cold | 2-32f | 2-202 |
| In mud | 2-37c | 2-210 |
| In salt water | 2-38d | 2-212 |
| In snow | 2-33c | 2-204 |
| Airbrake hand control kit: | | |
| General | 2-47a | 2-234 |
| Operation | 2-47b | 2-234 |
| Airbrake hose connections for towing trailers: | | |
| Coupling trailer to vehicle | 2-48b | 2-235 |
| General | 2-48a | 2-235 |
| Preventive maintenance services | 2-10.1 | 2-42 ■ |
| Uncoupling trailer from vehicle | 2-48c | 2-236 |
| Air cleaner service | 3-11g | 3-17 |
| Air compressor preventive maintenance services | 2-10.1 | 2-70.17 ■ |
| Air conditioners (table 2-5) | 2-29 | 2-173 |
| Air conditioner, operating van | 2-29h | 2-182 |
| Air intake system preventive maintenance services | 2-10.1 | 2-70.5 ■ |
| Air reservoir: | | |
| Draincock preventive maintenance services | 2-10.1 | 2-46 ■ |
| General | 3-12a | 3-18 |
| Inspection | 3-12c | 3-18 |
| Service | 3-12b | 3-18 |
| Alcohol evaporator in freezing temperatures preventive maintenance services | 2-10.1 | 2-70.20 ■ |
| Appendix A–References: | | |
| Field manuals | A-2c | A-2 |
| Forms | A-2e | A-2 |
| General publications | A-2d | A-2 |
| Publications index | A-1 | A-1 |
| Technical bulletins | A-2b | A-1 |
| Technical manuals | A-2a | A-1 |
| Appendix B–Components of End Item List and Basic Issue Items List: | | |
| Abbreviations | B-4 | B-3 |
| Explanation of columns | B-3 | B-1 |
| Federal supply codes for manufacturer | B-5 | B-3 |
| General | B-2 | B-1 |

# INDEX (Cont'd)


| | Para. | Page |
|---|---|---|
| **A (Cont'd)** | | |
| Scope | B-1 | B-1 |
| Basic issue items list: | | |
| General | B-7 | B-5 |
| Components of end item list: | | |
| General | B-6 | B-4 |
| Appendix C–Additional Authorization List: | | |
| Explanation of listing | C-3 | C-1 |
| General | C-2 | C-1 |
| Scope | C-1 | C-1 |
| Appendix D–Expendable/Durable Supplies and Materials List: | | |
| Description | D-2d | D-1 |
| General | D-1 | D-1 |
| Item number | D-2a | D-1 |
| Level | D-2b | D-1 |
| National Stock Number | D-2c | D-1 |
| Unit of measure (U/M) | D-2e | D-1 |
| Appendix E–Stowage and Sign Guide: | | |
| General | E-2 | E-1 |
| Scope | E-1 | E-1 |
| Stowage locations (all vehicles) | E-3 | E-1 |
| Stowage locations (M816 medium wrecker) | E-3 | E-2 |
| Stowage locations (M818 tractor) | E-3 | E-3 |
| Stowage locations (M820, M820A1, M820A2 expansible vans) | E-3 | E-4 |
| Arctic winterization kit, operating: | | |
| General | 2-43a | 2-224 |
| Operating engine compartment covers | 2-43b | 2-224 |
| Operating fuel-burning engine coolant heater | 2-43d | 2-227 |
| Operating fuel-burning personnel heater | 2-43c | 2-224 |
| Operating slave receptacle | 2-43e | 2-230 |
| Preventive maintenance services | 2-10.1 | 2-70.8 |
| Troubleshooting | 3-9 | 3-11 |
| Auxiliary equipment, operation of | 2-39 | 2-213 |
| **B** | | |
| Backing of vehicle | 2-17 | 2-82 |
| Basic issue items list | B-7 | B-5 |
| Batteries preventive maintenance services | 2-10.1 | 2-70.7 |
| Battery inspection | 3-13 | 3-18 |
| Blackout operations, expansible van | 2-29i | 2-183 |
| Body equipment, controls, and indicators: | | |
| Bolster logging truck (M815) | 2-5a | 2-12 |
| Bridge stake truck (M821) | 2-5d | 2-20 |
| Dump truck (M817) | 2-5c | 2-19 |
| Expansible van (M820, M820A1, M820A2) | 2-5e | 2-21 |
| Medium wrecker (M816) and tractor wrecker (M819) | 2-5b | 2-13 |
| Bolster logging truck (M815): | | |
| Controls and indicators | 2-5 | 2-12 |

# INDEX (Cont'd)


| | Para. | Page |
|---|---|---|
| **B (Cont'd)** | | |
| Operation | 2-24a | 2-106 |
| Physical description | 1-11b | 1-14 |
| Preventive maintenance services | 2-10.1 | 2-70.22 ■ |
| Purpose of the vehicle | 1-11a | 1-14 |
| Bow and tarp kit: | | |
| Installation | 2-41a | 2-216 |
| Raising paulin for ventilation | 2-41b | 2-218 |
| Removal | 2-41c | 2-218 |
| Brake system: | | |
| Preventive maintenance services | 2-10.1 | 2-56 ■ |
| Troubleshooting | 3-9 | 3-6 |
| Breather cap service (M819), oil reservoir | 3-14 | 3-19 |
| Bridge transporting, stake, truck wo/w (M821): | | |
| Body equipment, controls, and indicators | 2-5d | 2-20 |
| Operation | 2-30 | 2-189 |
| Performance | 1-17b | 1-21 |
| Preventive maintenance services | 2-10.1 | 2-59 ■ |
| Purpose of the vehicle | 1-17a | 1-21 |
| **C** | | |
| Capacities (table 1-5) | 1-18 | 1-24 |
| Cargo truck w/w and wo/w (M813, M813A1, and M814): | | |
| Differences | 1-10a | 1-12 |
| Operation | 2-23 | 2-102 |
| Preventive maintenance services | 2-10.1 | 2-68 ■ |
| Purpose of the vehicles | 1-10b | 1-12 |
| Special limitations | 1-10c | 1-12 |
| Chain or cable, towing with, to start engine | 2-20b | 2-89 |
| Chassis controls and indicators: | | |
| General | 2-1 | 2-1 |
| Know your controls and indicators | 2-2 | 2-1 |
| Preparation for use | 2-3 | 2-1 |
| Chassis dimensions (table 1-7) | 1-18 | 1-25 |
| Class leakage definitions: | | |
| Class I | 2-10a | 2-37 |
| Class II | 2-10b | 2-37 |
| Class III | 2-10c | 2-37 |
| Cleaning instructions, general (table 2-1) | 2-8 | 2-35 |
| Clutch: | | |
| Preventive maintenance services | 2-10.1 | 2-50 ■ |
| Troubleshooting | 3-9 | 3-5 |
| Cold weather starting (below 32ÞF (0ÞC) | 2-13 | 2-74 |
| Components of end item list | B-6 | B-4 |
| Compressed air system operation | 1-21 | 1-30 |
| Coolant surge tank | 3-11c | 3-15 |

# INDEX (Cont'd)


| | Para. | Page |
|---|---|---|
| **C (Cont'd)** | | |
| Coupling the semitrailer | 2-27b | 2-144 |
| Crane boom length (table 1-12) | 1-18 | 1-27 |
| Crankcase oil level | 3-11b | 3-14 |
| **D** | | |
| ■ Decontamination unit, M11 | 2-10.1 | 2-70.23 |
| Deepwater fording kit: | | |
| After fording | 2-40d | 2-215 |
| Fording operation | 2-40c | 2-215 |
| General | 2-40a | 2-214 |
| Preparation for fording | 2-40b | 2-214 |
| ■ Preventive maintenance services | 2-10.1 | 2-56 |
| Troubleshooting | 3-9 | 3-11 |
| Description, general | 1-8 | 1-11 |
| Designations | 1-9 | 1-11 |
| Destruction of military equipment to prevent enemy use | 1-3 | 1-8 |
| Differences in models (expansible vans) (table 2-4) | 2-29 | 2-173 |
| ■ Differentials preventive maintenance services | 2-10.1 | 2-70.14 |
| Dimensions (table 1-2) | 1-18 | 1-22 |
| ■ Drivebelts | 2-10.1 | 2-63 |
| Driving: | | |
| In extreme cold | 2-32d | 2-201 |
| In extreme heat | 2-34c | 2-205 |
| In mud | 2-37b | 2-209 |
| In salt water | 2-38c | 2-211 |
| In sandy or dusty areas | 2-35b | 2-207 |
| In snow | 2-33b | 2-203 |
| Dropsides, lowering and raising | 2-23f | 2-104 |
| Dump body hoist: | | |
| ■ Preventive maintenance services | 2-10.1 | 2-57 |
| Troubleshooting | 3-9 | 3-8 |
| Dump truck w/w and wo/w (M817): | | |
| Body equipment, controls, and indicators | 2-5c | 2-19 |
| Operation | 2-26 | 2-130 |
| Performance | 1-13b | 1-16 |
| ■ Preventive maintenance services | 2-10.1 | 2-52 |
| Purpose of the vehicle | 1-13a | 1-16 |
| Troubleshooting | 3-9 | 3-8 |
| **E** | | |
| Electrical system, operating van | 2-29f | 2-180 |
| Electrical system operation | 1-20 | 1-29 |
| Engine and cooling system data (table 1-8) | 1-18 | 1-25 |
| Engine compartment covers, operating | 2-43b | 2-224 |
| ■ Engine compartment surge tank preventive maintenance services | 2-10.1 | 2-64 |
| Engine coolant heater, operating fuel-burning | 2-43d | 2-227 |
| Engine downshifting speeds rpm data (table 1-11) | 1-18 | 1-27 |
| ■ Engine oil level preventive maintenance services | 2-10.1 | 2-64 |

# INDEX (Cont'd)


| | Para. | Page |
|---|---|---|
| **E (Cont'd)** | | |
| Engine service: | | |
| Air cleaner service | 3-11g | 3-17 |
| Coolant surge tank | 3-11c | 3-15 |
| Crankcase oil level | 3-11b | 3-14 |
| Fuel filter/water separator | 3-11e | 3-15 |
| General | 3-11a | 3-14 |
| Power steering oil reservoir | 3-11d | 3-15 |
| Preventive maintenance services | 2-10.1 | 2-64 |
| Priming fuel system | 3-11f | 3-16 |
| Troubleshooting | 3-9 | 3-4 |
| Equipment description and data: | | |
| Bolster logging truck w/w M815 | 1-11 | 1-14 |
| Bridge transporting stake truck wo/w: M821 | 1-17 | 1-21 |
| Cargo trucks w/w and wo/w: M813, M813A1, and M814 | 1-10 | 1-12 |
| Designations | 1-9 | 1-11 |
| Dump truck w/w and wo/w: M817 | 1-13 | 1-16 |
| Expansible van truck wo/w: M820, M820A1, and M820A2 | 1-16 | 1-19 |
| General description | 1-8 | 1-11 |
| Medium wrecker truck w/w: M816 | 1-12 | 1-15 |
| Tabulated data | 1-18 | 1-22 |
| Tractor truck w/w and wo/w: M818 | 1-14 | 1-17 |
| Tractor wrecker truck w/w: M819 | 1-15 | 1-18 |
| Exhaust system | 2-10.1 | 2-66 |
| Expanding van body | 2-29e | 2-176 |
| Expansible van trucks | 2-29a | 2-173 |
| Expansible van trucks, differences in models | 2-29 | 2-173 |
| Expansible van truck wo/w (M820, M820A1, and M820A2): | | |
| Differences | 1-16a | 1-19 |
| Operation | 2-29 | 2-173 |
| Performance | 1-16c | 1-19 |
| Preventive maintenance services | 2-10.1 | 2-70.12 |
| Purpose of the vehicle | 1-16b | 1-19 |
| Troubleshooting | 3-9 | 3-9 |
| Expendable/durable supplies and materials list | D-1 | D-1 |
| Exterior of vehicle preventive maintenance services | 2-10.1 | 2-39 |
| **F** | | |
| Federal supply codes for manufacture | B-5 | B-5 |
| Field manuals | A-2c | A-2 |
| Fifth wheel, tractor and tractor wrecker: | | |
| Operation | 2-27 | 2-144 |
| Preventive maintenance services | 2-10.1 | 2-41 |
| Troubleshooting | 3-9 | 3-9 |
| Fire extinguishers preventive maintenance services | 2-10.1 | 2-46 |
| Fording: | | |
| After | 2-40d | 2-215 |
| Operation | 2-40 | 2-214 |

# INDEX (Cont'd)


| | Para. | Page |
|---|---|---|
| **F (Cont'd)** | | |
| Preparation for | 2-40b | 2-214 |
| Forms and records | 1-2 | 1-8 |
| Forms (references) | A-2e | A-2 |
| Frame preventive maintenance services | 2-10.1 | 2-70.29 |
| Front and rear drive axles and propeller shafts preventive maintenance services | 2-10.1 | 2-56 |
| Front and rear wheels removal and replacement | 3-15i | 3-24 |
| Front and side racks: | | |
| Installation | 2-23e | 2-104 |
| Removal | 2-23d | 2-103 |
| Front of vehicle preventive maintenance services | 2-10.1 | 2-39 |
| Front winch: | | |
| Chassis controls and indicators | 2-4 | 2-9 |
| Operation | 2-22 | 2-96 |
| Preventive maintenance services | 2-10.1 | 2-60 |
| Troubleshooting | 3-9 | 3-7 |
| Fuel-burning engine coolant heater, operating | 2-43d | 2-227 |
| Fuel-burning personnel heater, operating | 2-43c | 2-224 |
| Fuel filter preventive maintenance services | 2-10.1 | 2-70.4 |
| Fuel system: | | |
| Fuel filter/water seperator | 3-11e | 3-15 |
| Permissible fuels | 1-18 | 1-24 |
| Preventive maintenance services | 2-10.1 | 2-70.4 |
| Priming fuel system | 3-11f | 3-16 |
| **G** | | |
| Gaging, tire | 3-16b | 3-26 |
| General cleaning instructions (table 2-1) | 2-8 | 2-35 |
| General description | 1-8 | 1-11 |
| General information: | | |
| Destruction of military equipment to prevent enemy use | 1-3 | 1-8 |
| Forms and records | 1-2 | 1-8 |
| Military terms and common terms cross reference list | 1-7 | 1-10 |
| Military terms and measurements abbreviations | 1-6 | 1-9 |
| Reporting equipment improvement recommendations | 1-4 | 1-8 |
| Scope | 1-1 | 1-1 |
| Vehicle/bridge classification | 1-5 | 1-8 |
| General lubrication instructions: | | |
| Application points | 3-5b | 3-1 |
| Reports and records | 3-5c | 3-1 |
| Service intervals | 3-5a | 3-1 |
| General lubrication instructions under unusual conditions: | | |
| Changing lubricant grade | 3-6b | 3-2 |
| Maintaining lubricant levels | 3-6c | 3-2 |
| Service intervals | 3-6a | 3-2 |
| **H** | | |
| Heater, engine coolant: | | |
| Controls | 2-6b | 2-28 |

# INDEX (Cont'd)


| | Para. | Page |
|---|---|---|
| **H (Cont'd)** | | |
| Operation | 2-43d | 2-227 |
| Preventive maintenance services | 2-10.1 | 2-58 ■ |
| Heater, personnel | 2-43c | 2-224 |
| Heaters, operating van | 2-29g | 2-180 |
| Heating system: | | |
| Troubleshooting | 3-9 | 3-7 |
| Hood, raising and securing | 2-19 | 2-84 |
| Horns preventive maintenance services | 2-10.1 | 2-49 ■ |
| Hot water personnel heater kit: | | |
| General | 2-42a | 2-222 |
| Operation | 2-42b | 2-222 |
| Operation winterfront cover | 2-42c | 2-223 |
| Preventive maintenance services | 2-10.1 | 2-70.15 ■ |
| Troubleshooting | 3-9 | 3-7 |
| How to use this manual | | i |
| Hydraulic crane: | | |
| Preventive maintenance services | 2-10.1 | 2-70.1 ■ |
| Troubleshooting | 3-9 | 3-7 |
| Hydraulic liftgate, van: | | |
| Power liftgate operation (M820A2 only) | 2-29d | 2-174 |
| Preventive maintenance services | 2-10.1 | 2-58 ■ |
| Troubleshooting | 3-9 | 3-9 |
| **I** | | |
| Inflation, tire | 3-16c | 3-27 |
| Installing cab top and raising windshield | 2-21 | 2-94 |
| Instrument panel: | | |
| Controls and indicators | 2-4 | 2-2 |
| Preventive maintenance services | 2-10.1 | 2-48 ■ |
| Integral components of end items list | B-6 | B-4 |
| **J** | | |
| Jacking procedure | 3-15h | 3-24 |
| **K** | | |
| Kit, A-frame: | | |
| General | 2-44a | 2-231 |
| Operating | 2-44d | 2-231 |
| Preparation for use | 2-44c | 2-231 |
| Preventive maintenance services | 2-10.1 | 2-70.26 ■ |
| Safety precautions | 2-44b | 2-231 |
| Troubleshooting | 3-9 | 3-13 |
| Kit, airbrake hand control: | | |
| General | 2-47a | 2-234 |
| Operating | 2-47b | 2-234 |
| Kit, arctic winterization: | | |
| Controls | 2-6b | 2-28 |
| General | 2-43a | 2-224 |
| Operating | 2-43b | 2-224 |

# INDEX (Cont'd)


| | Para. | Page |
|---|---|---|
| **K (Cont'd)** | | |
| ■ Preventive maintenance services | 2-10.1 | 2-70.16 |
| Troubleshooting | 3-9 | 3-11 |
| Kit, bow and tarp: | | |
| Installation | 2-41a | 2-216 |
| Raising paulin for ventilation | 2-41b | 2-218 |
| Removal | 2-41c | 2-218 |
| Kit, deepwater fording: | | |
| After fording | 2-40d | 2-215 |
| Controls | 2-6c | 2-31 |
| General | 2-40a | 2-214 |
| Operation | 2-40c | 2-215 |
| Preparation for fording | 2-40b | 2-214 |
| ■ Preventive maintenance services | 2-10.1 | 2-56 |
| Troubleshooting | 3-9 | 3-11 |
| Kit, hot water personnel heater: | | |
| Controls | 2-6b | 2-28 |
| General | 2-42a | 2-222 |
| Operation | 2-42b | 2-222 |
| Operation of winterfront cover | 2-42c | 2-223 |
| ■ Preventive maintenance services | 2-10.1 | 2-70.15 |
| Troubleshooting | 3-9 | 3-7 |
| Kits, special purpose, controls and indicators | 2-6 | 2-28 |
| Kit, troop seat and paulin (M817): | | |
| Controls and indicators | 2-6e | 2-32 |
| General | 2-46a | 2-323 |
| Troop seat installation | 2-46b | 2-233 |
| Kit, windshield washer: | | |
| Operation | 2-45 | 2-232 |
| Troubleshooting | 3-9 | 3-13 |
| **L** | | |
| Leakage definitions, class | 2-10 | 2-37 |
| Leveling van body | 2-29c | 2-174 |
| Liftgate, operating | 2-29j | 2-184 |
| Load test: | | |
| Medium wrecker truck (M816) | 1-12c | 1-15 |
| Tractor wrecker truck (M819) | 1-15c | 1-18 |
| Logging truck (M815), bolster: | | |
| Controls and indicators | 2-5a | 2-12 |
| Operation | 2-24 | 2-106 |
| Physical description | 1-11b | 1-14 |
| ■ Preventive maintenance services | 2-10.1 | 2-70.22 |
| Purpose of the vehicle | 1-11a | 1-14 |
| Loose projectile restraint system (LPRS) | 2-24g | 2-105 |
| Lubrication: | | |
| Changing lubricant grade | 3-6b | 3-2 |

# INDEX (Cont'd)


| | Para. | Page |
|---|---|---|
| **L (Cont'd)** | | |
| General lubricating instructions under unusual conditions | 3-6 | 3-2 |
| Maintaining lubricant levels | 3-6c | 3-2 |
| Service intervals | 3-6a | 3-2 |
| Lubrication, general instructions: | | |
| Application points | 3-5b | 3-1 |
| Lubrication for continued operation below 0ÞF (-17ÞC) | 3-7 | 3-2 |
| Lubrication order (LO 9-2320-260-12) | 3-4 | 3-1 |
| Reports and records | 3-5c | 3-1 |
| Service and intervals | 3-5a | 3-1 |
| Lubrication instructions, general. under unusual conditions: | | |
| Changing lubricant grade | 3-6b | 3-2 |
| Maintaining lubricant levels | 3-6c | 3-2 |
| Service intervals | 3-6a | 3-2 |
| **M** | | |
| Machine gun mount preventive maintenance services | 2-10.1 | 2-70.15 |
| Maintenance procedures: | | |
| Air reservoirs | 3-12 | 3-18 |
| Battery inspection | 3-13 | 3-18 |
| Engine service | 3-11 | 3-14 |
| General | 3-10 | 3-14 |
| Oil reservoir breather cap service | 3-14 | 3-19 |
| Tire inflation | 3-16 | 3-26 |
| Wheels and tires | 3-15 | 3-20 |
| Winch shear pin replacement | 3-17 | 3-28 |
| Material weights, typical | 2-26 | 2-130 |
| Maximum road speed (table 1-10) | 1-18 | 1-26 |
| Medium wrecker truck (M816): | | |
| Controls and indicators | 2-5b | 2-13 |
| Crane, operation of | 2-28a | 2-150 |
| Load test | 1-12c | 1-15 |
| Operation of front winch | 2-22 | 2-96 |
| Operation of rear winch | 2-25c | 2-117 |
| Operation, vehicle | 2-25 | 2-117 |
| Performance | 1-12b | 1-15 |
| Preventive maintenance services | 2-10.1 | 2-54 |
| Purpose of the vehicle | 1-12a | 1-15 |
| Towing | 2-20d | 2-91 |
| Troubleshooting | 3-9 | 3-7 |
| Metric system | Inside back cover | |
| Midships winch: | | |
| Operation | 2-24b | 2-106 |
| Preventive maintenance services | 2-10.1 | 2-71 |
| Troubleshooting | 3-9 | 3-7 |
| Military terms and common terms cross reference list | 1-7 | 1-10 |
| Military terms and measurements abbreviations | 1-6 | 1-9 |

# INDEX (Cont'd)


| | Para. | Page |
|---|---|---|
| M809 series special purpose kits (table 2-6) | 2-39 | 2-213 |
| **N** | | |
| National stock number (components of end item) | B-3b | B-1 |
| National stock number (expendable supplies and materials) | D-2c | D-1 |
| **O** | | |
| Oil level, engine preventive maintenance services | 2-10.1 | 2-64 |
| Oil reservoir breather cap service (M819) | 3-14 | 3-19 |
| Oil reservoir, power steering | 3-11d | 3-15 |
| Operation: | | |
| A-frame kit: | | |
| General | 2-44a | 2-231 |
| Operating | 2-44d | 2-231 |
| Preparation for use | 2-44c | 2-231 |
| Preventive maintenance services | 2-10.1 | 2-70.26 |
| Safety precautions | 2-44b | 2-231 |
| Troubleshooting | 3-9 | 3-13 |
| Airbrake hand control kit | 2-47 | 2-234 |
| Air conditioner, van | 2-29h | 2-182 |
| Arctic winterization kit: | | |
| Engine compartment covers | 2-43b | 2-224 |
| Fuel-burning engine coolant heater | 2-43d | 2-227 |
| Fuel-burning personnel heater | 2-43c | 2-224 |
| General | 2-43a | 2-224 |
| Preventive maintenance services | 2-10.1 | 2-70.21 |
| Slave receptacle | 2-43e | 2-230 |
| Troubleshooting | 3-9 | 3-11 |
| Auxiliary equipment (special purpose kits): | | |
| A-frame kit | 2-44 | 2-231 |
| Airbrake hand control kit | 2-47 | 2-234 |
| Arctic winterization kit | 2-43 | 2-224 |
| Bow and tarp kit | 2-41 | 2-216 |
| Deepwater fording kit | 2-40 | 2-214 |
| General | 2-39 | 2-213 |
| Hot water personnel heater kit | 2-42 | 2-222 |
| Troop seat kit | 2-46 | 2-232 |
| Windshield washer kit | 2-45 | 2-232 |
| Bolster logging truck and trailers: | | |
| General | 2-24a | 2-106 |
| Loading bolster trailer on bolster truck | 2-24e | 2-112 |
| Loading or unloading bolster truck and trailer | 2-24d | 2-111 |
| Preparing bolster truck and trailer for loading cargo | 2-24c | 2-110 |
| Preventive maintenance services | 2-10.1 | 2-70.22 |
| Unloading bolster trailer from bolster truck | 2-24b | 2-106 |
| Bridge transporting truck: | | |
| After unloading | 2-30i | 2-198 |

# INDEX (Cont'd)


| | Para. | Page |
|---|---|---|
| **O (Cont'd)** | | |
| General | 2-30a | 2-189 |
| Loading the truck manually | 2-30d | 2-191 |
| Loading the truck using crane | 2-30c | 2-190 |
| Preparation for loading | 2-30b | 2-189 |
| Preparation for unloading | 2-30f | 2-195 |
| Preventive maintenance services | 2-10.1 | 2-59 |
| Tie down of loaded material | 2-30e | 2-194 |
| Unloading truck manually | 2-30h | 2-198 |
| Unloading truck using crane | 2-30g | 2-197 |
| Cargo trucks: | | |
| General | 2-23a | 2-102 |
| Installing front and side racks | 2-23e | 2-104 |
| Lowering and raising dropsides | 2-23f | 2-104 |
| Lowering and raising troop seats | 2-23c | 2-102 |
| Lowering tailgate | 2-23b | 2-102 |
| Removing front and side racks | 2-23d | 2-103 |
| Deepwater fording kit | 2-40 | 2-214 |
| Dump truck: | | |
| Before operation | 2-26c | 2-132 |
| General | 2-26a | 2-130 |
| Loading the truck | 2-26d | 2-134 |
| Payload capacities | 2-26b | 2-130 |
| Preventive maintenance services | 2-10.1 | 2-57 |
| Troubleshooting | 3-9 | 3-8 |
| Unloading tuck by dumping | 2-26f | 2-136 |
| Unloading truck by rocker-type operation | 2-26g | 2-139 |
| Unloading truck by spreading | 2-26h | 2-141 |
| Unloading truck with dump body down | 2-26e | 2-136 |
| Electrical system | 1-20 | 1-29 |
| Electrical system, van | 2-29f | 2-180 |
| Engine compartment covers | 2-43b | 2-224 |
| Engine coolant heater | 2-43d | 2-227 |
| Expansible van trucks (M820, M820A1, M820A2): | | |
| Blackout operations | 2-29i | 2-183 |
| Expanding van body | 2-29e | 2-176 |
| General | 2-29a | 2-173 |
| Leveling van body | 2-29c | 2-174 |
| Power liftgate | 2-29j | 2-184 |
| Power liftgate operation (M820A2 only) | 2-29d | 2-174 |
| Preventive maintenance services | 2-10.1 | 2-58 |
| Retracting van body | 2-29k | 2-185 |
| Selecting operating site | 2-29b | 2-173 |
| Troubleshooting | 3-9 | 3-9 |
| Van air conditioner | 2-29h | 2-182 |
| Van electrical system | 2-29f | 2-180 |

# INDEX (Cont'd)


| | Para. | Page |
|---|---|---|
| **O (Cont'd)** | | |
| Van heaters | 2-29g | 2-180 |
| Fifth wheel | 2-27 | 2-144 |
| Front winch: | | |
| General | 2-22a | 2-96 |
| Lowering load | 2-22f | 2-100 |
| Preparation for use | 2-22b | 2-96 |
| Preparing winch for travel | 2-22h | 2-100 |
| Preventive maintenance services | 2-10.1 | 2-60 |
| Pulling or lifting load | 2-22d | 2-99 |
| Releasing winch chain | 2-22g | 2-100 |
| Stopping winch | 2-22e | 2-100 |
| Troubleshooting | 3-9 | 3-7 |
| Unwinding winch cable | 2-22c | 2-97 |
| Fuel burning engine coolant heater | 2-43d | 2-227 |
| Fuel burning personnel heater | 2-43c | 2-224 |
| Hot water personnel heater | 2-42b | 2-222 |
| Liftgate | 2-29j | 2-184 |
| Medium wrecker (M816): | | |
| Front winch operation | 2-25b | 2-117 |
| General | 2-25a | 2-117 |
| Preparation for travel | 2-25i | 2-126 |
| Pulling the load | 2-25f | 2-123 |
| Rear winch operation | 2-25c | 2-117 |
| Rewinding the winch without a load | 2-25h | 2-125 |
| Rigging the load | 2-25e | 2-122 |
| Stopping the winch | 2-25g | 2-125 |
| Unwinding the winch cable | 2-25d | 2-119 |
| Personnel heater, hot water | 2-42b | 2-222 |
| Rear winch | 2-25c | 2-117 |
| Seatbelt | 2-19.1 | 2-84.2 |
| Service brake | 1-22 | 1-31 |
| Slave receptacle | 2-43e | 2-230 |
| Tractor (M818) | 2-27 | 2-144 |
| Tractor and tractor wrecker fifth wheel: | | |
| Coupling the semitrailer | 2-27b | 2-144 |
| General | 2-27a | 2-144 |
| Preventive maintenance services | 2-10.1 | 2-41 |
| Troubleshooting | 3-9 | 3-9 |
| Uncoupling the semitrailer | 2-27c | 2-149 |
| Under unusual conditions: | | |
| Operating in deep mud: | | |
| After operation | 2-37c | 2-210 |
| Driving vehicle | 2-37b | 2-209 |
| General | 2-37a | 2-209 |
| Operating deepwater fording kit: | | |

# INDEX (Cont'd)


| | Para. | Page |
|---|---|---|
| **O (Cont'd)** | | |
| After fording | 2-40d | 2-215 |
| Fording operation | 2-40c | 2-215 |
| General | 2-40a | 2-214 |
| Preparation for fording | 2-40b | 2-214 |
| Preventive maintenance services | 2-10.1 | 2-56 |
| Troubleshooting | 3-9 | 3-11 |
| Operating in dusty, sandy areas: | | |
| Driving vehicle | 2-35b | 2-207 |
| General | 2-35a | 2-207 |
| Stopping or parking | 2-35c | 2-208 |
| Operating in extreme cold: | | |
| After operation | 2-32f | 2-202 |
| Before operation | 2-32b | 2-200 |
| Driving vehicle | 2-32d | 2-201 |
| General | 2-32a | 2-200 |
| Starting engine | 2-32c | 2-200 |
| Stopping or parking | 2-32e | 2-201 |
| Operating in extreme heat: | | |
| Before operation | 2-34b | 2-205 |
| Driving vehicle | 2-34c | 2-205 |
| General | 2-34a | 2-204 |
| Stopping or parking | 2-34d | 2-207 |
| Operating in salt water: | | |
| After fording operation | 2-38d | 2-212 |
| Fording operation in salt water | 2-38c | 2-211 |
| General | 2-38a | 2-210 |
| Preparation for fording | 2-38b | 2-210 |
| Operating in snow: | | |
| After operation | 2-33c | 2-204 |
| Driving vehicle | 2-33b | 2-203 |
| General | 2-33a | 2-203 |
| Operating under rainy or humid conditions: | | |
| Driving vehicle | 2-36b | 2-208 |
| General | 2-36a | 2-208 |
| Special instructions: | | |
| Cleaning (see para. 2-8) | 2-31b | 2-199 |
| Driving instructions | 2-31d | 2-199 |
| General | 2-31a | 2-199 |
| Lubrication | 2-31c | 2-199 |
| Reporting materiel failure | 2-31f | 2-199 |
| Special purpose kits | 2-31e | 2-199 |
| Under usual conditions: | | |
| General | 2-11 | 2-72 |
| Vehicle service lights | 2-14 | 2-76 |
| Wrecker crane (M816): | | |

# INDEX (Cont'd)


| | Para. | Page |
|---|---|---|
| **O (Cont'd)** | | |
| Heavy rear lifting | 2-28a.4 | 2-157 |
| Heavy side lifting | 2-28a.5 | 2-159 |
| Lifting and swinging the load | 2-28a.3 | 2-155 |
| Lifting the load | 2-28a.2 | 2-154 |
| Preparation for lifting | 2-28a.1 | 2-150 |
| Preparation for travel | 2-28a.6 | 2-159 |
| Wrecker crane (M819): | | |
| Extending and retracting boom extension | 2-28b.3 | 2-170 |
| Lifting and swinging the load | 2-28b.1 | 2-163 |
| Positioning the crane supports | 2-28b.2 | 2-166 |
| Preparation for travel with semitrailer | 2-28b.5 | 2-172 |
| Preparation for travel without semitrailer | 2-28b.4 | 2-171 |
| Operating vehicle: | | |
| Backing the vehicle | 2-17 | 2-82 |
| Driving vehicle down steep grades | 2-15j | 2-79 |
| Driving vehicle up steep grades | 2-15k | 2-79 |
| Placing and sustaining vehicle in motion | 2-15 | 2-77 |
| Stopping the vehicle and engine | 2-16 | 2-80 |
| Windshield washer kit: | | |
| ■ Preventive maintenance checks and services (Table 2-2) | 2-10.1 | 2-38 |
| General | 2-45a | 2-232 |
| Operation | 2-45b | 2-232 |
| Winterfront cover | 2-42c | 2-223 |
| **P** | | |
| Part number | B-3b | B-1 |
| Paulin, bows: | | |
| Installation | 2-41a | 2-216 |
| Raising paulin for ventilation | 2-41b | 2-218 |
| Removal | 2-41c | 2-218 |
| Payload capacities, dump truck (see table 2-3) | 2-26b | 2-130 |
| Performance data (table 1-9) | 1-18 | 1-26 |
| Permissible fuels (table 1-6) | 1-18 | 1-24 |
| Personnel heater, hot water, operation of | 2-42b | 2-222 |
| Personnel heater, operating fuel-burning | 2-43c | 2-224 |
| Placing and sustaining vehicle in motion | 2-15 | 2-77 |
| Power liftgate, operating | 2-29j | 2-184 |
| Power steering: | | |
| ■ Assist cylinder preventive maintenance services | 2-10.1 | 2-65 |
| Oil reservoir | 3-11d | 3-15 |
| ■ Pump preventive maintenance services | 2-10.1 | 2-70.18 |
| Preparation for fording | 2-38b | 2-210 |
| Preparation for loading bridge transporting truck | 2-30b | 2-189 |
| Preparation for use of front winch | 2-22b | 2-96 |
| Preparing A-frame for use | 2-44c | 2-231 |
| Preparing bolster truck and trailer for loading cargo | 2-24c | 2-110 |

# INDEX (Cont'd)


| | Para. | Page |
|---|---|---|
| **P (Cont'd)** | | |
| Preparing front winch for travel | 2-22h | 2-100 |
| Preparing rear winch for travel | 2-25i | 2-126 |
| Preparing wrecker crane for lifting (M816) | 2-28a.1 | 2-150 |
| Preparing wrecker crane for travel (M816) | 2-28a.6 | 2-159 |
| Preparing wrecker crane for travel with semitrailer | 2-28b.5 | 2-172 |
| Preparing wrecker crane for travel without semitrailer | 2-28b.4 | 2-171 |
| Preventive maintenance checks and services: | | |
| Class leakage definitions | 2-10 | 2-37 |
| Cleaning instructions and precautions | 2-8 | 2-34 |
| Correct assembly or stowage | 2-9f | 2-37 |
| Designated intervals | 2-9b | 2-36 |
| Item number | 2-9a | 2-36 |
| Not ready condition | 2-9d | 2-36 |
| Procedures | 2-9c | 2-36 |
| Table 2-2. Preventive maintenance checks and services | 2-10.1 | 2-38 |
| Troublespots | 2-9e | 2-37 |
| Priming fuel system | 3-11f | 3-16 |
| Publications, general | A-2d | A-2 |
| **R** | | |
| Rainy or humid conditions, operating under | 2-36 | 2-208 |
| Raising and securing hood | 2-19 | 2-84 |
| Raising paulin for ventilation | 2-41b | 2-218 |
| Rear winch: | | |
| Operation | 2-25c | 2-117 |
| Preventive maintenance services | 2-10.1 | 2-44 |
| Troubleshooting | 3-9 | 3-8 |
| Records, forms and | 1-2 | 1-8 |
| References | A-1 | A-1 |
| Reporting equipment improvement recommendations | 1-4 | 1-8 |
| Reporting of errors | | ii |
| Reservoir: | | |
| Air | 3-12 | 3-18 |
| Hydraulic crane oil | 2-5b | 2-17 |
| Power steering oil | 2-4 | 2-10 |
| Windshield washer fluid preventive maintenance services | 2-10.1 | 2-70.22 |
| Retracting van body | 2-29k | 2-185 |
| Road speed, maximum (table 1-10) | 1-18 | 1-26 |
| **S** | | |
| Scope: | | |
| Manual | 1-1 | 1-1 |
| Seatbelt operation (floating seat and fixed seat) | 2-19.1 | 2-84.2 |
| Semitrailer, coupling the | 2-27b | 2-144 |
| Semitrailer, uncoupling the | 2-27c | 2-149 |
| Service, air cleaner | 3-11g | 3-17 |
| Service brake system operation | 1-22 | 1-31 |

# INDEX (Cont'd)


| | Para. | Page |
|---|---|---|
| **S (Cont'd)** | | |
| Service engine | 3-11 | 3-14 |
| Service lights, operation of vehicle | 2-14 | 2-76 |
| Shearpin replacement, winch | 3-17b | 3-28 |
| Slave receptacle: | | |
| Operating | 2-43c | 2-230 |
| ■ Preventive maintenance services | 2-10.1 | 2-70.8 |
| Troubleshooting | 3-9 | 3-13 |
| Spare tire | 3-15 | 3-20 |
| Special purpose kits controls, and indicators: | | |
| A-frame kit | 2-6f | 2-33 |
| Airbrake control kit | 2-6a | 2-28 |
| Arctic winterization kit | 2-6b | 2-28 |
| Deepwater fording kit | 2-6c | 2-31 |
| Hot water personnel heater kit | 2-6d | 2-32 |
| Troop seat and paulin kit (M817) | 2-6e | 2-32 |
| Special purpose kits, operation of: | | |
| A-frame kit | 2-44 | 2-231 |
| Airbrake hand control kit | 2-47 | 2-234 |
| Arctic winterization kit | 2-43 | 2-224 |
| Bow and tarp kit | 2-41 | 2-216 |
| Deepwater fording kit | 2-40 | 2-214 |
| General | 2-39 | 2-213 |
| Hot water personnel heater kit | 2-42 | 2-222 |
| Troop seat kit | 2-46 | 2-232 |
| Windshield washer kit | 2-45 | 2-232 |
| Special tools and equipment | 3-1 | 3-1 |
| Stake truck w/w (M821), bridge transporting | 1-17 | 1-21 |
| Starting engine: | | |
| In exteme cold | 2-32c | 2-200 |
| Starting (above +32ÞF) (0ÞC) | 2-12 | 2-72 |
| Starting (below +32ÞF) (0ÞC) | 2-13 | 2-74 |
| Using chain or cable | 2-20b | 2-89 |
| Using slave receptacle | 2-18 | 2-83 |
| Using towbar | 2-20a | 2-86 |
| Steering system: | | |
| ■ Preventive maintenance services | 2-10.1 | 2-70.25 |
| Troubleshooting | 3-9 | 3-6 |
| ■ Steering column U-joints preventive maintenance services | 2-10.1 | 2-70.16 |
| Stopping the vehicle and engine | 2-16 | 2-80 |
| Stowage and sign guide | E-1 | E-1 |
| Supplies and materials, expendable/durable | 3-3 | 3-1 |
| Surge tank, coolant | 3-11c | 3-15 |
| ■ Surge tank, engine compartment | 2-10.1 | 2-64 |

# INDEX (Cont'd)


| | Para. | Page |
|---|---|---|
| **T** | | |
| Tables: | | |
| 1-1. Vehicle Class Information | 1-5 | 1-8 |
| 1-2. Dimensions | 1-18 | 1-22 |
| 1-3. Weights | 1-18 | 1-23 |
| 1-4. Tire Inflation Data | 1-18 | 1-23 |
| 1-5. Capacities | 1-18 | 1-24 |
| 1-6. Permissible Fuels | 1-18 | 1-24 |
| 1-7. Chassis Dimensions | 1-18 | 1-25 |
| 1-8. Engine and Cooling System Data | 1-18 | 1-25 |
| 1-9. Performance Data | 1-18 | 1-26 |
| 1-10. Maximum Road Speed | 1-18 | 1-26 |
| 1-11. Engine Downshifting RPM Data | 1-18 | 1-27 |
| 1-12. Crane Boom Length | 1-18 | 1-27 |
| 1-13. Winch Data | 1-18 | 1-27 |
| 2-1. General Cleaning Instructions | 2-8 | 2-35 |
| 2-2. Preventive Maintenance Checks and Services | 2-10.1 | 2-38 ■ |
| 2-3. Typical Material Weights | 2-26 | 2-130 |
| 2-4. Differences in Models | 2-29 | 2-173 |
| 2-5. Air Conditioners | 2-29 | 2-173 |
| 2-6. M809 Series Special Purpose Kits | 2-39 | 2-213 |
| 3-1. Troubleshooting | 3-9 | 3-4 |
| Additional Authorization List | | C-1 |
| Basic Issue Items List | | B-5 |
| Expendable Supplies and Materials List | | D-1 |
| Tabulated data | 1-18 | 1-22 |
| Tailgate, lowering | 2-23b | 2-102 |
| Tank, coolant, surge | 3-11c | 3-15 |
| Technical bulletins (reference) | A-2b | A-1 |
| Technical manuals (reference) | A-2a | A-1 |
| Technical principles of operation: | | |
| Compressed air system operation | 1-21 | 1-30 |
| Electrical system operation | 1-20 | 1-29 |
| General | 1-19 | 1-28 |
| Service brake system operation | 1-21 | 1-31 |
| Tire inflation: | | |
| General | 3-16a | 3-26 |
| Tire gaging | 3-16b | 3-26 |
| Tire inflation | 3-16c | 3-27 |
| Tire inflation data (table 1-4) | 1-18 | 1-23 |
| Tires: | | |
| Preventive maintenance services | 2-10.1 | 2-70.8 ■ |
| Tires, wheels and | 3-15 | 3-20 |
| Tools and equipment: | | |
| Basic issue items | 3-2 | 3-1 |
| Expendable, supplies and materials | 3-3 | 3-1 |
| Special tools and equipment | 3-1 | 3-1 |

# INDEX (Cont'd)


| | Para. | Page |
|---|---|---|
| **T (Cont'd)** | | |
| Towing vehicle: | | |
| Flat-towing with towbar | 2-20c | 2-90 |
| Lift-towing with wrecker | 2-20d | 2-91 |
| With chain or cable to start engine | 2-20b | 2-89 |
| With towbar to start engine | 2-20a | 2-86 |
| Tractor and tractor wrecker fifth wheel, operation of | 2-27 | 2-144 |
| Tractor truck (M818): | | |
| Performance | 1-14b | 1-17 |
| Purpose of the vehicle | 1-14a | 1-17 |
| Special limitations | 1-14c | 1-17 |
| Tractor-wrecker truck (M819): | | |
| Load test | 1-15c | 1-18 |
| Performance test | 1-15b | 1-18 |
| Purpose of the vehicle | 1-15a | 1-18 |
| Trailer brakes: | | |
| Preventive maintenance services | 2-10.1 | 2-53 |
| Transfer case: | | |
| Preventive maintenance services | 2-10.1 | 2-70.14 |
| Troubleshooting | 3-9 | 3-5 |
| Transmission: | | |
| Preventive maintenance services | 2-10.1 | 2-70.14 |
| Troubleshooting | 3-9 | 3-5 |
| Troop seat kit: | | |
| General | 2-46a | 2-232 |
| Installation | 2-46b | 2-233 |
| Lowering and raising | 2-23c | 2-102 |
| Troubleshooting: | | |
| General | 3-8 | 3-3 |
| Troubleshooting procedures (table 3-1): | | |
| A-frame kit | 3-9 | 3-13 |
| Arctic winterization kit | 3-9 | 3-11 |
| Brakes | 3-9 | 3-5 |
| Clutch | 3-9 | 3-5 |
| Deepwater fording kit | 3-9 | 3-11 |
| Dump body hoist | 3-9 | 3-8 |
| Engine | 3-9 | 3-4 |
| Expansible vans | 3-9 | 3-9 |
| Fifth wheel | 3-9 | 3-9 |
| Front and midships winches | 3-9 | 3-7 |
| Heating system | 3-9 | 3-7 |
| Hydraulic crane | 3-9 | 3-7 |
| Rear winch | 3-9 | 3-8 |
| Slave receptacle | 3-9 | 3-13 |
| Steering | 3-9 | 3-6 |
| Transfer case | 3-9 | 3-5 |

# INDEX (Cont'd)


| T (Cont'd) | Para. | Page |
|---|---|---|
| Transmission | 3-9 | 3-5 |
| Wheels and tires | 3-9 | 3-6 |
| Windshield washer kit | 3-9 | 3-13 |
| Truck, cargo (M813, M813A1, M814) | 1-10 | 1-12 |
| Truck, dump (M817) | 1-13 | 1-16 |
| Truck, expansible van (M820, M820A1, M820A2) | 1-16 | 1-19 |
| Truck, stake, bridge transporting (M821) | 1-17 | 1-21 |
| Typical material weights (table 2-3) | 2-26 | 2-130 |
| **U** | | |
| Uncoupling the semitrailer | 2-27c | 2-149 |
| Unusual conditions, operating under | 2-31 | 2-199 |
| Using slave receptacle to start engine | 2-18 | 2-83 |
| Usual conditions, operation under | 2-11 | 2-72 |
| **V** | | |
| Van, expansible (M820, M820A1, M820A2): | | |
| Blackout operations | 2-29i | 2-183 |
| Expanding van body | 2-29e | 2-176 |
| General | 2-29a | 2-173 |
| Leveling van body | 2-29c | 2-174 |
| Operating power liftgate (with external power source) | 2-29d | 2-174 |
| Operating power liftgate (with vehicle power source) | 2-29j | 2-184 |
| Operating van air conditioner | 2-29h | 2-182 |
| Operating van electrical system | 2-29f | 2-180 |
| Operating van heaters | 2-29g | 2-180 |
| Preventive maintenance services | 2-10.1 | 2-58 |
| Retracting van body | 2-29k | 2-185 |
| Selecting operating site | 2-29b | 2-173 |
| Troubleshooting | 3-9 | 3-9 |
| Vehicle/bridge classification | 1-5 | 1-8 |
| Vehicle class information (table 1-1) | 1-5 | 1-8 |
| Vehicle towing: | | |
| With chain or cable to start engine | 2-20b | 2-89 |
| With towbar | 2-20c | 2-90 |
| With towbar to start engine | 2-20a | 2-86 |
| With wrecker crane | 2-20d | 2-91 |
| **W** | | |
| Warnings | Warning a | |
| Warning summary | Warning b | |
| Wedges, adjustment (fifth wheel) | 2-27b | 2-145 |
| Weights, vehicle and payload (table 1-3) | 1-18 | 1-23 |
| Wheels and tires: | | |
| Front and rear wheels removal and replacement | 3-15i | 3-24 |
| General | 3-15a | 3-20 |
| Jacking procedure | 3-15h | 3-24 |
| Preventive maintenance services | 2-10.1 | 2-70.8 |
| Spare wheel removal and replacement (M813 and M813A1) | 3-15f | 3-22 |

# INDEX (Cont'd)


| | Para. | Page |
|---|---|---|
| **W (Cont'd)** | | |
| Spare wheel removal and replacement (M814) | 3-15c | 3-20 |
| Spare wheel removal and replacement (M815, M817, M818, M820, M820A1 and M820A2) | 3-15b | 3-20 |
| Spare wheel removal and replacement (M816) | 3-15e | 3-22 |
| Spare wheel removal and replacement (M819) | 3-15d | 3-21 |
| Spare wheel removal and replacement (M821) | 3-15g | 3-23 |
| Troubleshooting | 3-9 | 3-6 |
| Winch: | | |
| Front | 2-22 | 2-96 |
| Rear | 2-25c | 2-117 |
| Shear pin replacement | 3-17b | 3-28 |
| Winch data (table 1-13) | 1-18 | 1-27 |
| Windshield: | | |
| Raising | 2-21 | 2-94 |
| Windshield washer kit: | | |
| Operation | 2-45 | 2-232 |
| Troubleshooting | 3-9 | 3-13 |
| Windshield washer reservoir preventive maintenance services | 2-10.1 | 2-70.22 |
| Winterfront cover, operation of | 2-42c | 2-223 |
| Wrecker crane: | | |
| Operation (M816) | 2-28a | 2-150 |
| Operation (M819) | 2-28b | 2-163 |
| Towing operation | 2-20d | 2-91 |
| Wrecker, Medium (M816): | | |
| Controls and indicators | 2-5b | 2-13 |
| Crane, operation of | 2-28a | 2-150 |
| Load test | 1-12c | 1-15 |
| Operation of front winch | 2-22 | 2-96 |
| Operation of rear winch | 2-25c | 2-117 |
| Operation, vehicle | 2-25 | 2-117 |
| Performance | 1-12b | 1-15 |
| Preventive maintenance services | 2-10.1 | 2-54 |
| Purpose of the vehicle | 1-12a | 1-15 |
| Towing | 2-20d | 2-91 |
| Troubleshooting | 3-9 | 3-7 |

By Order of the Secretaries of the Army and the Air Force:

**JOHN A. WICKHAM, JR.**
*General, United States Army*
*Chief of Staff*

Official:

DONALD J. DELANDRO
*Brigadier General, United States Army*
*The Adjutant General*

CHARLES A. GABRIEL, *General, USAF*
*Chief of Staff*

Official:

EARL T. O'LOUGHLIN, *General, USAF*
*Commander, Air Force Logistics Command*

Distribution:
To be distributed in accordance with DA Form 12-38, Operator Maintenance requirements for Truck Diesel, 5-ton, 6x6, M809 series.

* U.S. GOVERNMENT PRINTING OFFICE: 1995 - 388-421 - 421/03260

| **RECOMMENDED CHANGES TO PUBLICATIONS AND BLANK FORMS**<br>For use of this form, see AR 25-30; the proponent agency is ODISC4. | Use Part II (reverse) for Repair Parts and Special Tools Lists (RPSTL) and Supply Catalogs/Supply Manuals (SC/SM). | **DATE:**<br>14 Dec 01 |
|---|---|---|

| **TO:** *(Forward to proponent of publication or form) (include ZIP code)*<br>AMSTA-LC-CI Tech Pubs, TACOM-RI<br>1 Rock Island Arsenal<br>Rock Island, IL 61299-7630 | **FROM:** *(Activity and location) (include ZIP code)*<br>Co. B, 1st BN, 2nd Brigade<br>Ft. Hood, TX 76445 |
|---|---|

**PART I - ALL PUBLICATIONS (EXCEPT RPSTL AND SC/SM) AND BLANK FORMS**

| PUBLICATION/FORM NUMBER | DATE | TITLE |
|---|---|---|
| TM 9-2320-260-10 | 14 JUNE 1985 | OPERATOR'S MANUAL |

| ITEM NO. | PAGE NO. | PARA-GRAPH | LINE NO.* | FIGURE NO. | TABLE NO. | RECOMMENDED CHANGES AND REASON *(Provide exact wording of recommended changes, if possible).* |
|---|---|---|---|---|---|---|
| | 2-12 | 2-5, item a.3. | | | | Reads: Latch secures bolster locks. Should read: Latch secures bolster travel locks. |
| | 2-119 | 2-25 step d.7. | | | | Reads: Release clutch pedal (11) slowly. Should read: Release clutch pedal (13) slowly. |
| | 3-4 | | | | 3-1, item 3 | Reads: Engine cranks but fails to start at outside temperatures below 0°F (-27°C). Should read: Engine cranks, but fails to start at outside temperatures below 0°F (-17°C) |

SAMPLE

**Reference to line numbers within the paragraph or subparagraph.*

| TYPED NAME, GRADE, OR TITLE: | TELEPHONE EXCHANGE/AUTOVON, PLUS EXTENSION: | SIGNATURE: |
|---|---|---|
| Pat Smith, ILT | AV272-4162 | Pat Smith, 1LT |

| **TO:** *(Forward direct to addressee listed in publication)*<br>AMSTA-LC-CI Tech Pubs, TACOM-RI<br>1 Rock Island Arsenal<br>Rock Island, IL 61299-7630 | **FROM:** *(Activity and location) (include ZIP code)* | **DATE:** |
|---|---|---|

**PART II - REPAIR PARTS AND SPECIAL TOOLS LISTS AND SUPPLY CATALOGS/SUPPLY MANUALS**

| PUBLICATION/FORM NUMBER | DATE | TITLE |
|---|---|---|
| | | |

| PAGE NO. | COLM NO. | LINE NO. | NATIONAL STOCK NUMBER | REFERENCE NO. | FIGURE NO. | ITEM NO. | TOTAL NO. OF MAJOR ITEMS SUPPORTED | RECOMMENDED ACTION |
|---|---|---|---|---|---|---|---|---|
| | | | | | | | | |

SAMPLE

**PART III - REMARKS** *(Any general remarks or recommendations, or suggestions for improvement of publications and blank forms. Additional blank sheets may be used if more space is needed.)*

| TYPED NAME, GRADE, OR TITLE | TELEPHONE EXCHANGE/AUTOVON, PLUS EXTENSION | SIGNATURE |
|---|---|---|
| | | |

| **RECOMMENDED CHANGES TO PUBLICATIONS AND BLANK FORMS**<br>For use of this form, see AR 25-30; the proponent agency is ODISC4. | Use Part II (reverse) for Repair Parts and Special Tools Lists (RPSTL) and Supply Catalogs/Supply Manuals (SC/SM). | **DATE:** |
|---|---|---|

| **TO:** *(Forward to proponent of publication or form) (include ZIP code)*<br>AMSTA-LC-CI Tech Pubs, TACOM-RI<br>1 Rock Island Arsenal<br>Rock Island, IL 61299-7630 | **FROM:** *(Activity and location) (include ZIP code)* |
|---|---|

**PART I - ALL PUBLICATIONS (EXCEPT RPSTL AND SC/SM) AND BLANK FORMS**

| PUBLICATION/FORM NUMBER | DATE | TITLE |
|---|---|---|
| **TM 9-2320-260-10** | **14 JUNE 1985** | **OPERATOR'S MANUAL** |

| ITEM NO. | PAGE NO. | PARA-GRAPH | LINE NO.* | FIGURE NO. | TABLE NO. | RECOMMENDED CHANGES AND REASON *(Provide exact wording of recommended changes, if possible).* |
|---|---|---|---|---|---|---|
| | | | | | | |

**Reference to line numbers within the paragraph or subparagraph.*

| TYPED NAME, GRADE, OR TITLE | TELEPHONE EXCHANGE/AUTOVON, PLUS EXTENSION | SIGNATURE |
|---|---|---|
| | | |

**DA FORM 2028, FEB 74** REPLACES DA FORM 2028, 1 DEC 68, WHICH WILL BE USED. USAPPC V3.00

| **TO:** *(Forward direct to addressee listed in publication)*<br>AMSTA-LC-CI Tech Pubs, TACOM-RI<br>1 Rock Island Arsenal<br>Rock Island, IL 61299-7630 | **FROM:** *(Activity and location) (include ZIP code)* | **DATE:** |
|---|---|---|

**PART II - REPAIR PARTS AND SPECIAL TOOLS LISTS AND SUPPLY CATALOGS/SUPPLY MANUALS**

| PUBLICATION/FORM NUMBER | DATE | TITLE |
|---|---|---|
| | | |

| PAGE NO. | COLM NO. | LINE NO. | NATIONAL STOCK NUMBER | REFERENCE NO. | FIGURE NO. | ITEM NO. | TOTAL NO. OF MAJOR ITEMS SUPPORTED | RECOMMENDED ACTION |
|---|---|---|---|---|---|---|---|---|
| | | | | | | | | |

**PART III - REMARKS** *(Any general remarks or recommendations, or suggestions for improvement of publications and blank forms. Additional blank sheets may be used if more space is needed.)*

| TYPED NAME, GRADE, OR TITLE | TELEPHONE EXCHANGE/AUTOVON, PLUS EXTENSION | SIGNATURE |
|---|---|---|
| | | |

USAPPC V3.00

**PIN: 027276-004**

# THE METRIC SYSTEM AND EQUIVALENTS

### LINEAR MEASURE

1 Centimeter = 10 Millimeters = 0.01 Meters = 0.3937 Inches
1 Meter = 100 Centimeters = 1,000 Millimeters = 39.37 Inches
1 Kilometer = 1,000 Meters = 0.621 Miles

### SQUARE MEASURE

1 Sq Centimeter = 100 Sq Millimeters = 0.155 Sq Inches
1 Sq Meter = 10,000 Sq Centimeters = 10.76 Sq Feet
1 Sq Kilometer = 1,000,000 Sq Meters = 0.386 Sq Miles

### CUBIC MEASURE

1 Cu Centimeter = 1,000 Cu Millimeters = 0.06 Cu Inches
1 Cu Meter = 1,000,000 Cu Centimeters = 35.31 Cu Feet

### LIQUID MEASURE

1 Milliliter = 0.001 Liters = 0.0338 Fluid Ounces
1 Liter = 1,000 Milliliters = 33.82 Fluid Ounces

### TEMPERATURE

Degrees Fahrenheit (F) = °C • 9 ÷ 5 + 32
Degrees Celsius (C) = °F - 32 • 5 ÷ 9
212° Fahrenheit is equivalent to 100° Celsius
89.96° Fahrenheit is equivalent to 32.2° Celsius
32° Fahrenheit is equivalent to 0° Celsius

### WEIGHTS

1 Gram = 0.001 Kilograms = 1,000 Milligrams = 0.035 Ounces
1 Kilogram = 1,000 Grams = 2.2 Lb
1 Metric Ton = 1,000 Kilograms = 1 Megagram = 1.1 Short Tons

## APPROXIMATE CONVERSION FACTORS

| TO CHANGE | TO | MULTIPLY BY |
|---|---|---|
| Inches | Millimeters | 25.400 |
| Inches | Centimeters | 2.540 |
| Feet | Meters | 0.305 |
| Yards | Meters | 0.914 |
| Miles | Kilometers | 1.609 |
| Square Inches | Square Centimeters | 6.451 |
| Square Feet | Square Meters | 0.093 |
| Square Yards | Square Meters | 0.836 |
| Square Miles | Square Kilometers | 2.590 |
| Acres | Square Hectometers | 0.405 |
| Cubic Feet | Cubic Meters | 0.028 |
| Cubic Yards | Cubic Meters | 0.765 |
| Fluid Ounces | Milliliters | 29.573 |
| Pints | Liters | 0.473 |
| Quarts | Liters | 0.946 |
| Gallons | Liters | 3.785 |
| Ounces | Grams | 28.349 |
| Pounds | Kilograms | 0.4536 |
| Short Tons | Metric Tons | 0.907 |
| Pound-Feet | Newton-Meters | 1.356 |
| Pounds Per Square Inch | Kilopascals | 6.895 |
| Miles Per Gallon | Kilometers Per Liter | 0.425 |
| Miles Per Hour | Kilometers Per Hour | 1.609 |

| TO CHANGE | TO | MULTIPLY BY |
|---|---|---|
| Millimeters | Inches | 0.03937 |
| Centimeters | Inches | 0.3937 |
| Meters | Feet | 3.280 |
| Meters | Yards | 1.094 |
| Kilometers | Miles | 0.621 |
| Square Centimeters | Square Inches | 0.155 |
| Square Meters | Square Feet | 10.764 |
| Square Meters | Square Yards | 1.196 |
| Square Kilometers | Square Miles | 0.386 |
| Square Hectometers | Acres | 2.471 |
| Cubic Meters | Cubic Feet | 35.315 |
| Cubic Meters | Cubic Yards | 1.308 |
| Milliliters | Fluid Ounces | 0.034 |
| Liters | Pints | 2.113 |
| Liters | Quarts | 1.057 |
| Liters | Gallons | 0.264 |
| Grams | Ounces | 0.035 |
| Kilograms | Pounds | 2.2046 |
| Metric Tons | Short Tons | 1.102 |
| Newton-Meters | Pound-Feet | 0.738 |
| Kilopascals | Pounds Per Square Inch | 0.145 |
| Kilometers Per Liter | Miles Per Gallon | 2.354 |
| Kilometers Per Hour | Miles Per Hour | 0.621 |

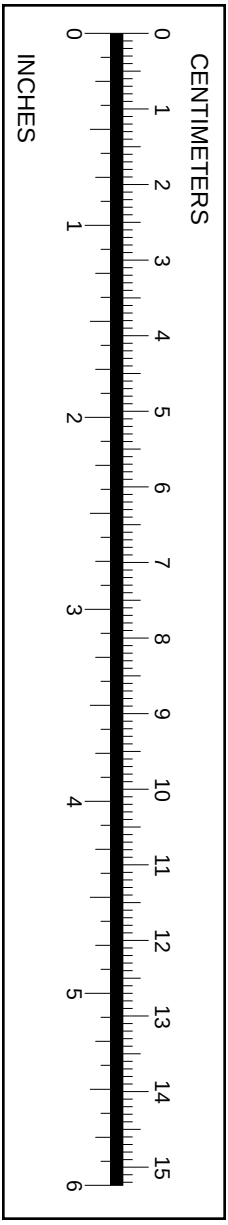

**PIN: 027276-000**