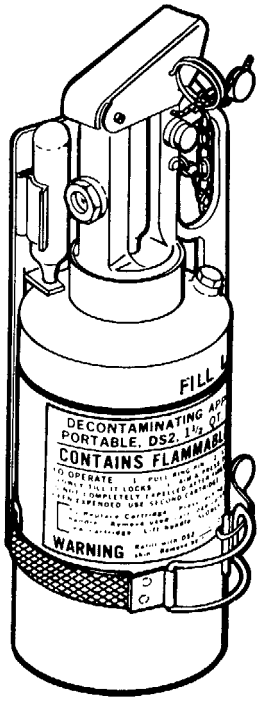

OPERATOR'S AND UNIT MAINTENANCE MANUAL INCLUDING REPAIR PARTS AND SPECIAL TOOLS LIST FOR

DECONTAMINATING APPARATUS, PORTABLE, DS2, 1-1/2 QUART, ABC-M11 NSN 4230-00-720-1618

HEADQUARTERS, DEPARTMENT OF THE ARMY

31 OCTOBER 1986

HOW TO USE THIS MANUAL	iii
PRINCIPLES OF OPERATION	1-3
OPERATING INSTRUCTIONS	2-0
TROUBLESHOOTING PROCEDURES	3-0
UNIT MAINTENANCE INSTRUCTIONS	4-1
MAINTENANCE ALLOCATION CHART	B-1
COMPONENTS OF END ITEM AND BASIC ISSUE ITEMS LISTS	C-1
ADDITIONAL AUTHORIZATION LIST	D-1
EXPENDABLE/DURABLE SUPPLIES AND MATERIALS LIST	E-0
UNIT MAINTENANCE REPAIR PARTS AND SPECIAL TOOLS LISTS (RPSTL)	F-1
ALPHABETICAL INDEX	Index -0

WARNING

Use extreme caution AT ALL TIMES when handling DS2.

DS2 is a combustible solution. Severe chemical burns can result if personnel fail to observe ALL safety precautions. DS2 can damage eyes and skin and, if inhaled, can cause illness. DS2 can damage the NBC protective overgarment. Long term contact (24 hours) with DS2 can degrade the NBC protective gloves, hood, and overboots.

To avoid injury: Wear NBC protective clothing including mask, hood, and rubber gloves AT ALL TIMES when handling DS2 in a contaminated environment. If available, wear M2 Toxicological Agent Protection Apron. In extreme cold temperatures, wear NBC protective rubber gloves INSIDE arctic mittens. Change mittens if they become soaked with DS2 since DS2 can damage the rubber gloves.

DO NOT allow DS2 to spray on personnel.

DO NOT spray DS2 on hot exhaust, hot surfaces, or open flame as it can cause fire.

DO NOT use DS2 to decontaminate personnel. It is harmful to the skin and eyes.

DO NOT inhale DS2 fumes.

DO NOT use the M11 DECON if it is damaged or leaking.

Wear protective gloves at all times when using dry cleaning solvent (SD).

DO NOT allow DS2 to spray on NBC protective clothing.

Do not use M11 DECON that has had DS2 in it for training unless it was cleaned at unit level after field use.

Nitrogen cylinder is highly pressurized. Misuse of nitrogen cylinder can cause personal injury.

Wear goggles for eye protection when drilling mounting holes.

Before servicing or maintaining the M11 DECON, be sure that it is not pressurized by removing nitrogen cylinder, pointing nozzle away from personnel, and depressing thumb lever.

After filling M11 DECON, be sure to wipe off any remaining DS2 from your M11 DECON.

For general first aid, refer to FM 21-1 1. Specific first aid medical information is on the following page.

FIRST AID

If DS2 comes in contact with:	*Emergency treatment to follow*
SKIN	Remove DS2 from the skin by wiping and then flush the affected area with water. DS2 may not give any immediate reaction; therefore, wash the area even if no discomfort is felt or no irritation is noted.
EYES	Flush eyes with large amounts of water immediately. After flushing the eyes for 20 to 30 minutes, seek medical attention. DS2 can damage the eyes after a few seconds of exposure.
MOUTH OR IS SWALLOWED	Rinse the mouth out immediately and SPIT OUT water, then drink large amounts of water and seek medical attention immediately. Do not induce vomiting.
NOSE (fumes/vapor)	If you inhale enough to cause coughing, leave the area immediately. If breathing difficulties continue, seek medical attention.

TECHNICAL MANUAL
NO. 34230-204-12&P,

HEADQUARTERS
DEPARTMENT OF THE ARMY
Washington, DC, 31 October 1986

Operator's and Unit Maintenance Manual: Including Repair Parts and Special Tools List for Decontaminating Apparatus, Portable, DS2, 1-1/2 Quart, ABC-M11 NSN 4230-00-720-1618

Current as of 16 September 1986 for appendix F

REPORTING ERRORS AND RECOMMENDING IMPROVEMENTS

You can help improve this manual. If you find any mistakes or if you know of a way to improve the procedures, please let us know. Mail your letter, DA Form 2028 (Recommended Changes to Publications and Blank Forms), or DA Form 2028-2 located in the back of this manual direct to: Commander, US Army Armament, Munitions and Chemical Command, ATTN: AMSMC-MAR-T (A), Aberdeen Proving Ground, MD 21010-5423. A reply will be furnished to you.

			Page
		HOW TO USE THIS MANUAL	**iii**
CHAPTER	**1**	**INTRODUCTION**	**1-1**
Section	I	General Information	1-1
Section	II	Equipment Description	1-2
Section	III	**Principles of Operation**	**1-3**
CHAPTER	**2**	**OPERATING INSTRUCTIONS**	**2-0**
Section	I	Description and Use of Operator's Controls and Indicators	2-0
Section	II	Operator Preventive Maintenance Checks and Services (PMCS)	2-1
Section	III	Operation Under Usual Conditions	2-4
Section	IV	Operation Under Unusual Conditions	2-11
CHAPTER	**3**	**OPERATOR MAINTENANCE INSTRUCTIONS**	**3-0**
Section	I	Lubrication Instructions	3-0
Section	II	**Troubleshooting Procedures**	**3-0**
Section	III	Maintenance Procedures	3-2

*This manual supersedes TM 3-4230-204-12&P, dated 21 February 1978.

			Page	Illus Figure
CHAPTER	**4**	**UNIT MAINTENANCE INSTRUCTIONS**	**4-1**	
Section	I	Repair Parts, Special Tools, TMDE, and Support Equipment	4-1	
Section	II	Service Upon Receipt	4-1	
Section	III	Unit Preventive Maintenance Checks and Services (PMCS)	4-4	
Section	IV	Unit Troubleshooting Procedures	4-6	
Section	V	Unit Maintenance Procedures	4-8	
Section	VI	Preparation for Storage or Shipment	4-21	
APPENDIX	**A**	**REFERENCES**	**A-0**	
APPENDIX	**B**	**MAINTENANCE ALLOCATION CHART**	**B-1**	
APPENDIX	**C**	**COMPONENTS OF END ITEM AND BASIC ISSUE ITEMS LISTS**	**C-1**	
APPENDIX	**D**	**ADDITIONAL AUTHORIZATION LIST**	**D-1**	
APPENDIX	**E**	**EXPENDABLE/DURABLE SUPPLIES AND MATERIALS LIST**	**E-0**	
APPENDIX	**F**	**UNIT MAINTENANCE REPAIR PARTS AND SPECIAL TOOLS LIST (RPSTL)**	**F-1**	
Section	I	Introduction	F-1	
Section	II	Repair Parts List	F-1-1	
Group	00	Decontaminating Apparatus	F-1-1	F-1
Group	01	Spray Head Assembly	F-2-1	F-2
Section	III	Special Tools List	F-2-1	
Section	IV	National Stock Number and Part Number Index	1-2	
		ALPHABETICAL INDEX	**Index-01**	

HOW TO USE THIS MANUAL

Become familiar with the entire manual before using the equipment.

Everything you need to know to operate the equipment and to do preventive maintenance is found in this book. Location of the mounting bracket is the responsibility of the local command; however, this manual does instruct on mounting the equipment in a typical application. For more detailed instructions and locations, consult the manual for the equipment it is mounted on.

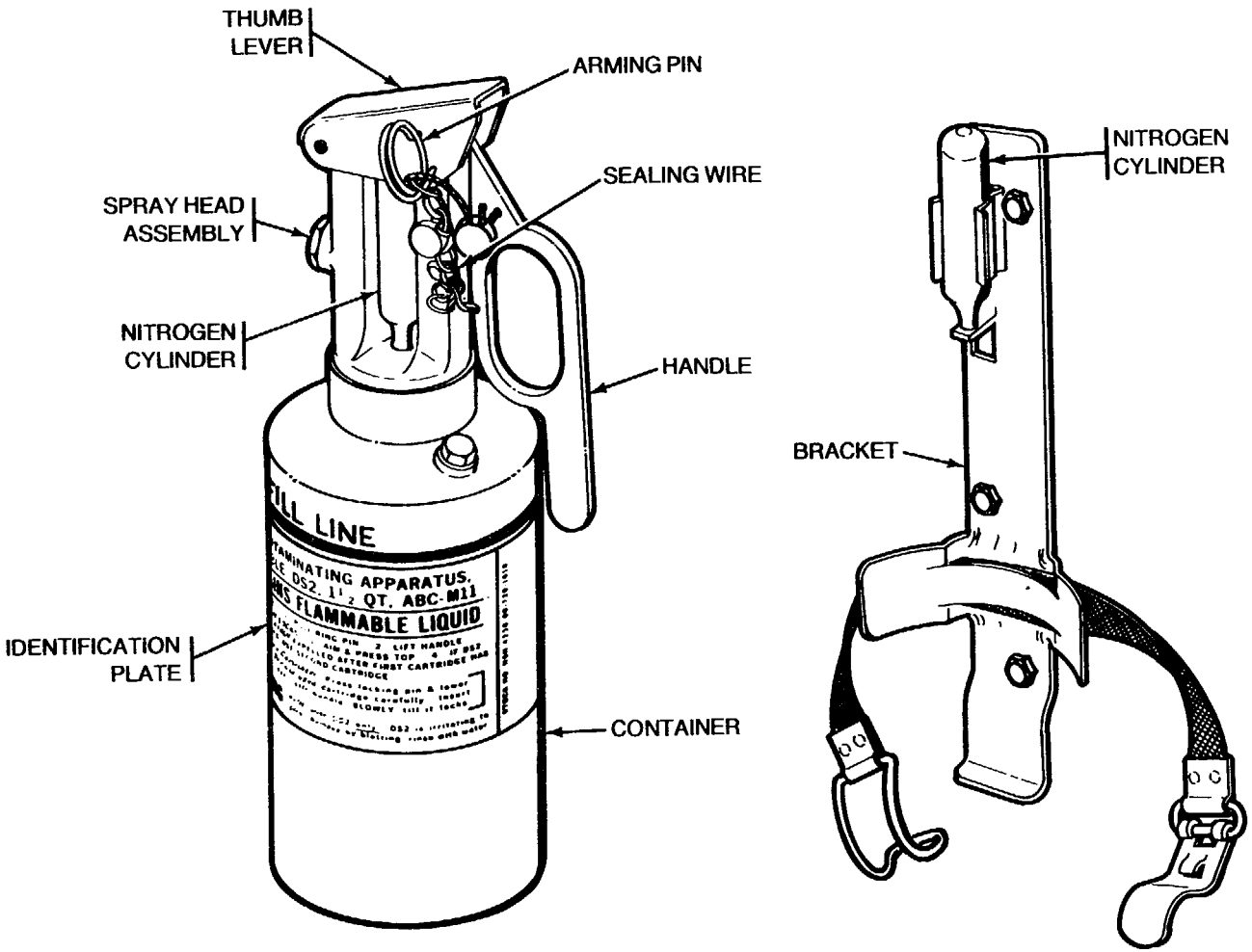

FULL EXTERNAL VIEW OF ABC-M1 1-1/2 QUART, DS2, PORTABLE DECONTAMINATING APPARATUS

CHAPTER 1

INTRODUCTION

Section I. GENERAL INFORMATION

1-1. SCOPE.

a. *Type of Manual*. Operator's and unit maintenance manual including repair parts and special tools list.

b. *Model Number and Equipment Name.* ABC-M11 1-1/2 Quart DS2 Portable Decontaminating Apparatus.

c. *Purpose of Equipment*. To spray decontaminating agent (DS2) on parts of vehicle/equipment most likely to be touched or used by operator, such as door handles, steering wheels, controls, seats, dashboards, levers, gasoline caps, and tools, contaminated with toxic chemical agents. Normally one filling of DS2 will decontaminate vehicles, trailer-mounted mission essential equipment, or weapons to make them safe for continued operation.

1-2. MAINTENANCE FORMS, RECORDS, AND REPORTS. Department of the Army forms and procedures used for equipment maintenance will be those prescribed by DA PAM 738-750, as contained in Maintenance Management Update.

1-3. DESTRUCTION OF ARMY MATERIEL TO PREVENT ENEMY USE. Destroy the equipment components by using demolition or mechanical methods described in TM 43-0002-31.

1-4. PREPARATION FOR STORAGE OR SHIPMENT. Refer to page 4-21 for instructions on how to prepare the equipment for storage or shipment.

1-5. NOMENCLATURE CROSS-REFERENCE LIST AND LIST OF ABBREVIATIONS. This listing includes nomenclature cross-references and abbreviations used in this manual.

Common Name	*Official Nomenclature*
M11 DECON	ABC-M11 Decontaminating Appara-tus, portable, DS2, 1-1/2 Quart, (without bracket)
DS2	Decontaminating agent, DS2
O-ring	Preformed packing
Handle locking pin	Pin, grooved, headed
Locking pin spring	Spring, helical, comp
Sealing wire	Seal, antipilferage

1-6. REPORTING EQUIPMENT IMPROVEMENT RECOMMEN-DATIONS (EIR). If your M11 DECON needs improvement, let us know. Send us an EIR. You, the user, are the only one who can tell us what you don't like about your equipment. Let us know why you don't like the design. Put it on an SF 368 (Quality Deficiency Report). Mail it to us at: Commander, US Army Armament, Munitions and Chemical Command, ATTN: AMSMC-QAD, Rock Island, IL 61299-6000. We'll send you a reply.

Section II. EQUIPMENT DESCRIPTION

1-7. EQUIPMENT CHARACTERISTICS, CAPABILITIES, AND FEATURES.

- Lightweight, portable, durable
- One man operated
- Refillable - Can be filled with DS2.
  - For training can be filled with water/antifreeze mixture.
- One filling covers about 135 square feet (12.5 square meters). This low volume allows only small areas to be decontaminated. This equipment is not designed to decontaminate entire vehicles/ equipment.
- Spray range of 6 to 8 feet.

1-8. EQUIPMENT DATA. All data approximated.

Volume ..... 1-1/2 qt (1.42 liters)
Filling ..... 1-1/3 qt (1.26 liters) of DS2

Gross Unit Weight
- Filled ..... 6 lb, 10 oz (3.005 kg)
- Empty ..... 3 lb (1.300 kg)
- Coverage per filling ..... 135 sq ft (12.54 sq m)
- Duration of one charge 30 sec (if used continuously/total spraying time)

Usable Temperatures
- Low .... -25F (-31.6°C)
- High .... 120F (49°C)

Dimensions (Including Handle)
- Width ..... 5.5 in. (139.7 m)
- Height ..... 14.25 in. (362 m)
- Gross unit cube ..... 0.25 cu ft (0.007 cu m)

1-9. SAFETY, CARE, AND HANDLING.

a. Be sure you read all the warnings found on the front pages of this manual.

b. When handling the nitrogen cylinder, be careful not to puncture the seal on the neck end. Puncturing the nitrogen cylinder outside of the M11 DECON is very dangerous. The cylinder will move rapidly and be uncontrollable until all the pressure is vented.

c. Take care not to initially pressurize the container with more than one nitrogen cylinder. Double charging with nitrogen cylinders is only authorized in extremely cold weather when M11 DECON streams liquid rather than sprays. (Refer to page 2-11 .)

d. When raising the handle, make sure your thumb does not contact the thumb lever. You may spray yourself or a buddy accidently. Do not press down on the thumb lever until the M11 DECON is aimed at the contaminated area.

e. When the sealing wire is missing or broken, consider that the M11 DECON is charged.

f. When Ml 11 DECON container has been damaged or shows signs of leaking, do not pressurize or attempt to use it. Turn it in and get a serviceable unit.

g. If the M11 DECON has been filled with DS2, do not refill it with water/ antifreeze mixture for training. Send it to unit maintenance for thorough cleaning. (Refer to page 4-12.)

h. DO NOT coat the interior of the M11 DECON container with oil, grease, or sprays of any type.

Section III. PRINCIPLES OF OPERATION

1-10. PRINCIPLES OF OPERATION.

1

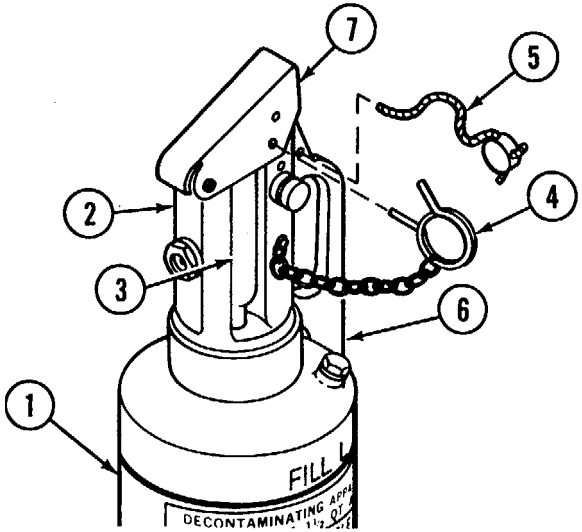

NOTE

DS2 decontaminating agent reacts with nerve agent and distilled mustard to effectively reduce their hazards within 5 minutes after application. With sufficient contact time (a minimum of 30 minutes) DS2 is effective for all known toxic chemical agents.

a. The container (1) with the spray head assembly (2) installed forms an air-and gastight container full of liquid.

b. The nitrogen cylinder (3) provides the discharge pressure ready to be used.

c. Pulling the arming pin (4) after removing the sealing wire (5), unlocks the handle (6) and the thumb lever (7).

2

a. Raising handle (6) drives the nitrogen cylinder (3) downward pressing the outer neck surface through an O-ring to form an air-tight seal. When the handle contacts the nitrogen cylinder, the handle locking pin (8) pops out to lock the nitrogen cylinder. At the same time, the end of nitrogen cylinder (3) is pressed onto the piercing pin assembly (9). When piercing pin enters the nitrogen cylinder seal, compressed nitrogen is released into the container.

b. Compressed nitrogen is routed through the piercing pin assembly, past the check valve, and out the bottom of the spray head assembly forming high pressure inside the container and on top of the liquid. At this time the M11 DECON is fully charged.

c. Pressing down on thumb lever (7) drives a valve stem (10) inside the spray head assembly down to open an air passage. With high pressure on top of the liquid driving downward, the liquid is pushed through the siphon tube (11) entering the valve stem area and blocked on top by part of valve stem (10). The liquid is forced out through the small nozzle hole (12) to the target.

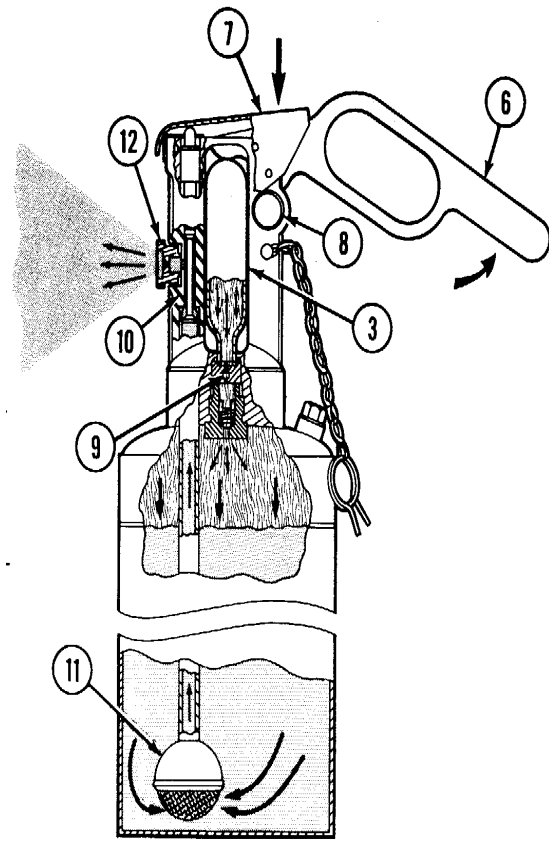

CHAPTER 2

OPERATING INSTRUCTIONS

Section I. DESCRIPTION AND USE OF OPERATOR'S CONTROLS AND INDICATORS

2-1. GENERAL. This section identifies the major components and describes the controls and indicators used to operate the M11 DECON. Know the operating controls before attempting to operate the equipment.

OPERATOR'S CONTROLS AND INDICATORS

KEY	CONTROL OR INDICATOR	FUNCTION
1	Bracket	The mounting bracket secures the M11 DECON to the crew-served vehicles/equipment. There are no controls or indicators on this unit.
2	Spray head assembly	The spray head assembly screws into the top hole of the container. It contains the items numbered 3 through 7.
3	Sealing wire	Prevents charging by unknowing persons. If sealing wire is broken or missing, consider the M11 DECON charged.
4	Arming pin	Prevents accidental operation.
5	Handle locking pin	Locks handle in raised position.
6	Handle	Presses nitrogen cylinder against piercing pin releasing nitrogen from cylinder to pressurize the M11 DECON. Provides the method of holding the M11 DECON and directing spray.
7	Thumb lever	Releases liquid.
8	Nitrogen cylinder	Charges the M11 DECON.

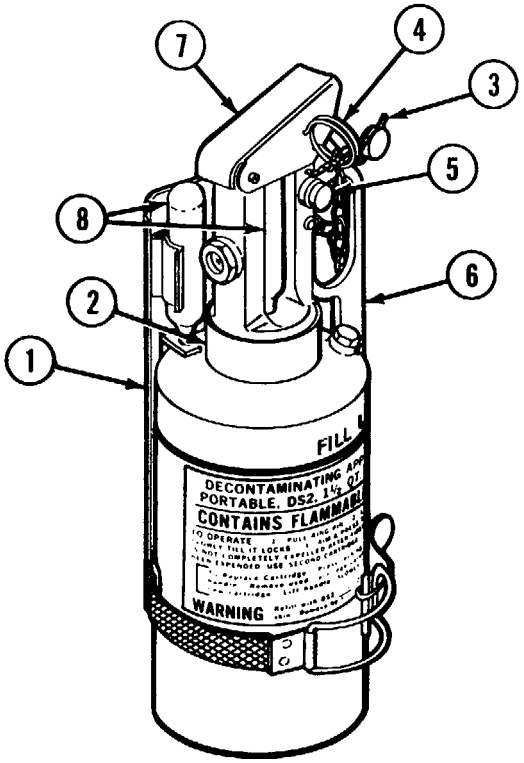

Section II. OPERATOR PREVENTIVE MAINTENANCE CHECKS AND SERVICES (PMCS)

2-2. INTRODUCTION. The operator must perform scheduled services to be sure the M11 DECON will operate properly.

a. *Before You Operate*. Always keep in mind the CAUTIONS and WARNINGS. Perform your before (B) PMCS. Perform before (B) operation PMCS if you are operating the item for the first time.

b. *After You Operate*. Be sure to perform your after (A) PMCS.

c. *If Your Equipment Fails to Operate*. Troubleshoot with proper equipment (p 3-0). Report any deficiencies with DA Form 2404. See DA PAM 738-750.

2-3. PMCS PROCEDURES.

a. *General*. Your Preventive Maintenance Checks and Services table lists the inspections and care of your equipment required to keep it in good operating condition. The interval column of your PMCS table tells you when to do a certain check or service. The procedure column of your PMCS table tells you how to do the required checks and services. Carefully follow these instructions. If the procedure tells you to, have unit maintenance do the work. If your equipment does not perform as required, refer to chapter 3 under Troubleshooting for possible problems. Report any malfunction or failures on the proper DA Form 2404, or refer to DA PAM 738-750.

b. *Item Number Column*. Checks and services are numbered in chronological order regardless of interval. Use this column as a source of item numbers for the TM Number" column on DA Form 2404, Equipment Inspection and Maintenance Worksheet, in recording results of PMCS.

c. *Interval Columns*. The columns headed "B" and "A" contain a dot (•) opposite the appropriate check. Thus, if a given check is performed before operation, a dot is placed opposite the checks in the "B" column; if the check is performed after operation, the dot is placed in the column headed "A"; and if the same check is made before and after operation, a dot is placed in both the A and the B columns.

d. *Item To Be Inspected Column*. The items to be inspected are identified by as few words, usually the common name, as will clearly identify the item, e.g., "bracket." e. Procedures Column. This column briefly describes how to perform the check and contains all the information needed to check and service the M11 DECON, including appropriate tolerances, adjustment limits, and instrument gage readings.

f. *Equipment Is Not Ready/Available If: Column*. This column contains the criteria that causes the equipment to be classified as not ready/available because of inability to perform its primary mission. An entry in this column will:

(1) Identify conditions that make the equipment not ready/available for readiness reporting.

(2) Deny use of the equipment until corrective maintenance has been performed.

NOTE

The terms *ready/available* and *mission capable* refer to the same status: Equipment is on hand and is able to perform its combat missions (see DA PAM 738-750).

OPERATOR PREVENTIVE MAINTENANCE CHECKS AND SERVICES (PMCS)

B - Before A - After

Item No.	Interval B	Interval A	Item to be Inspected	Procedures Check for and have repaired or adjusted as necessary	Equipment Is Not Ready/ Available If:
1	•		M11 DECON	**WARNING** **Nitrogen cylinder is highly pressurized. Misuse of nitrogen cylinder can cause personal injury.** **Before performing any maintenance on the M11 DECON, be sure that it is not pressurized by removing nitrogen cylinder, lifting handle pointing nozzle away from yourself and other personnel, and depressing thumb lever.**	
				a. Be sure M11 DECON is clean and the outside is not. rusted or corroded.	M11 DECON is corroded.
				b. Be sure no parts are broken or missing. parts.	M11 DECON has broken or missing
				c. Be sure sealing wire is unbroken then proceed to d. If sealing wire is broken, do the following steps:	
				(1) Remove M11 DECON from bracket.	M11 DECON has been filled with DS2 and charged with nitrogen.
				(2) Pull nitrogen cylinder (refer to page 2-5) and check to see if seal has been punctured. If punctured, discard nitrogen cylinder as it must be replaced after step 5.	
				(3) Raise handle to lock position.	
				(4) Aim M11 DECON in safe direction away from all personnel. Momentarily press down on thumb lever. If spray is noted, empty in accordance with unit SOP.	

				(5) Push in on handle locking pin and lower the handle. (6) Install full nitrogen cylinder into slot and slide neck into hole. DO NOT force cylinder down or you may puncture the cylinder. Lower thumb lever. Be sure the nozzle is pointing away from you and all personnel. (7) Replace sealing wire. (See page 2-7.) (8) Reinstall M11 DECON in the bracket and secure.	
		•		d. Wash dirt and any remaining DS2 from outer surfaces.	
		•		e. Turn in M11 DECON to unit maintenance for cleaning the inside of container.	Inside of container is not clean.
2	•	•	Bracket	a. Be sure the bracket is secured and not broken or rusty.	Bracket will not hold M11 DECON securely.
	•	•		b. Check that spare nitrogen cylinder is in place.	If not, get a replacement nitrogen cylinder.

Section III. OPERATION UNDER USUAL CONDITIONS

2-4. ASSEMBLY AND PREPARATION FOR USE.

The M11 DECON is assembled and ready for use at all times when it is mounted and in storage EXCEPT for filling the container with DS2 or water/antifreeze mixture.

(1) The M11 DECON will be filled ONLY prior to operation spraydown. When you are ready to use it, fill the container to FILL LINE with DS2, install a full nitrogen cylinder and attach a sealing wire.

(2) When unit is to be operated in training, the container will be filled with half antifreeze (item 1, app E), and half water. Install a full nitrogen cylinder (1) and a sealing wire (2) unless otherwise directed by unit SOP.

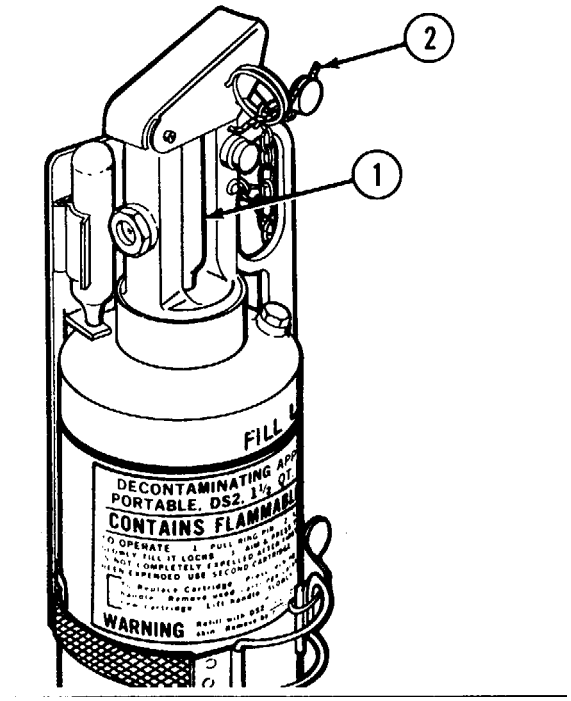

2-5. OPERATING PROCEDURES.

WARNING

Use extreme caution AT ALL TIMES when handling DS2.

DS2 is a combustible solution. Severe chemical burns can result if personnel fail to observe ALL safety precautions. DS2 can damage eyes and skin and, if inhaled, can cause illness. DS2 can damage the NBC protective overgarment. Long term contact with DS2 (24 hours) can damage the NBC protective gloves, hood, and overboots.

To avoid injury wear NBC protective clothing including mask, hood, and rubber gloves AT ALL TIMES when handling DS2. If available, wear M2 Toxicological Agent Protection Apron. In extreme cold temperatures, wear NBC protective rubber gloves INSIDE arctic mittens. Change mittens if they become soaked with DS2 since DS2 can damage the rubber gloves.

a. *Filling the M11 DECON.*

1

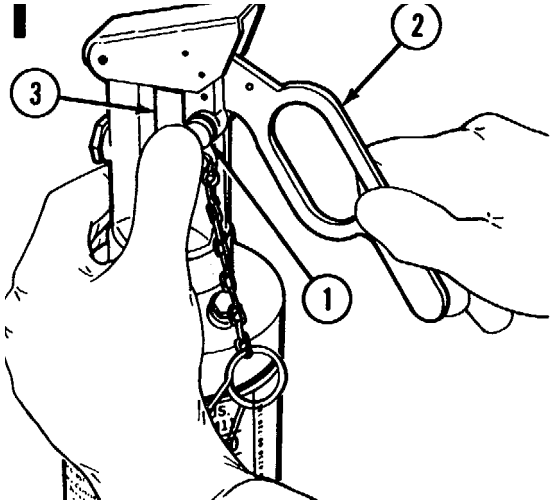

Press in on handle locking pin (1), lift thumb lever, and push down handle (2). Remove nitrogen cylinder (3).

2

Carefully unscrew and remove spray head assembly (4) from container (5).

NOTE

In training or nonhostile areas, skip steps 3 through 5 and prepare container as directed by your unit SOP.

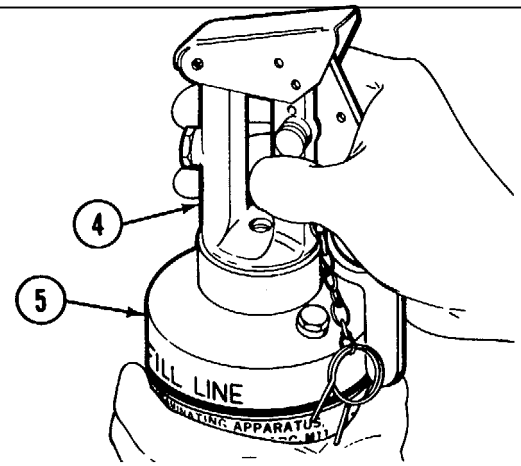

3

NOTE

When pouring DS2 into the M11 DECON, be sure there are no lumps or jellied DS2. If so, do not use this can. Obtain another can of DS2. Do not leave DS2 containers open because DS2 becomes unserviceable after 48 hours.

Be very careful not to cause the can to spray when opening. Use a screwdriver (on vehicle/equipment) to open 1-1/3 quart DS2 can (item 3, app E).

4

a. Pour DS2 (item 3, app E) into container (5) until can is empty or until it is level with fill line (6). The liquid level should be even with bottom edge (7) of the filler hole which is at the same level as fill line (6).

b. When filling the Ml 11 DECON using the 5 gallon pail (item 3, app E), pour until the DS2 is level with fill line.

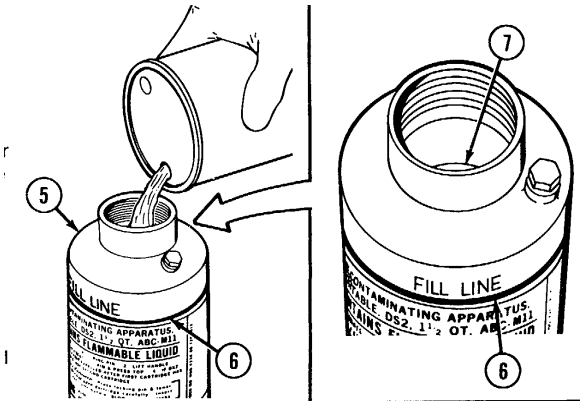

2-5. OPERATING PROCEDURES (CONT).

a. *Filling the M11 DECON (Cont)* .

5

Install spray head assembly (4) into container (5) and handtighten.

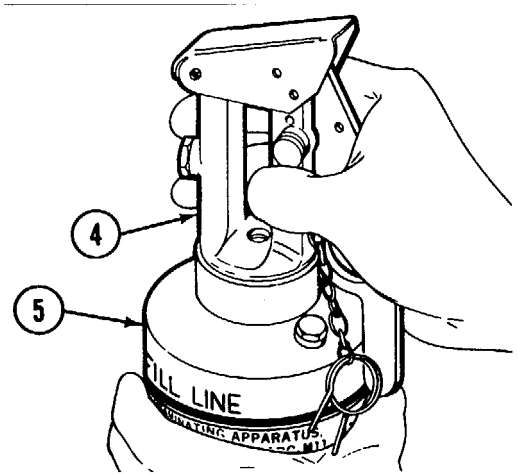

6

WARNING

Before servicing/maintaining the M11 DECON, be sure that it is not pressurized by removing nitrogen cylinder, pointing nozzle away from personnel, and depressing thumb lever.

Be sure to wipe off any remaining DS2 from your M11 DECON.

7

a. Look into the nitrogen cylinder hole (8) to make sure the O-ring (9) did not come out with old nitrogen cylinder.

CAUTION

Be careful not to cut the O-ring when inserting a new nitrogen cylinder into the spray head assembly.

NOTE

Be sure handle is down and locked before inserting nitrogen cylinder.

b. Lift up on thumb lever (10), insert new nitrogen cylinder (3) into slot and slide the neck into hole. Do not force cylinder down or you may puncture the cylinder. Lower thumb lever (10).

c. Turn the M11 DECON so nozzle (11) is pointing to the left and aimed away from personnel.

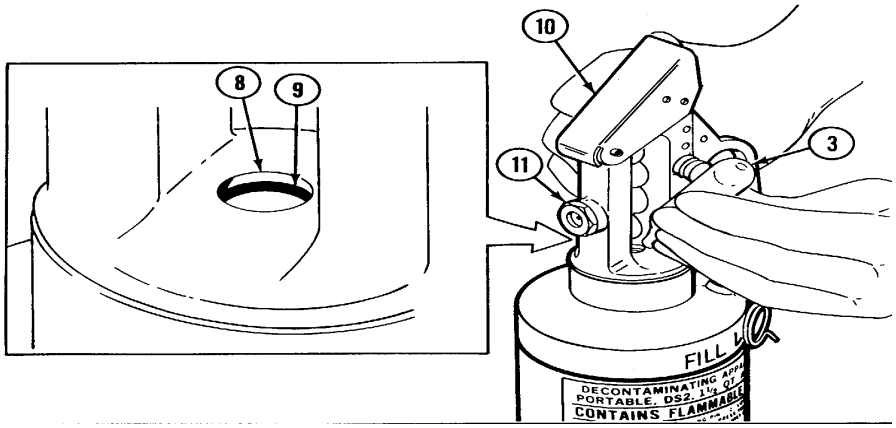

8

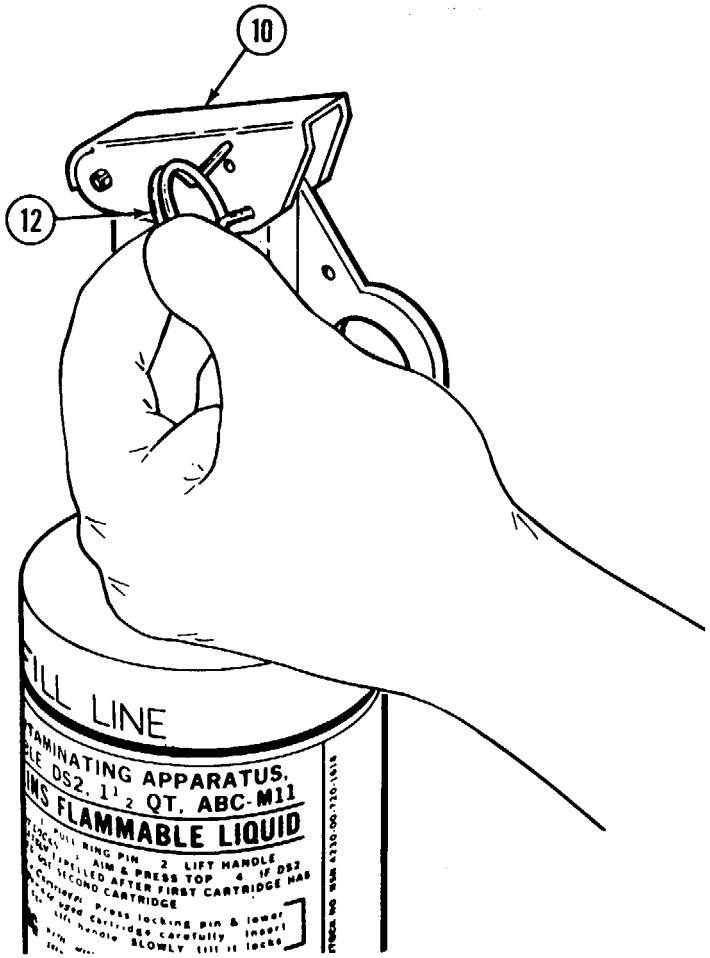

Insert one end of arming pin (12) into lowest hole in thumb lever (10) from the front side, and push in until other end of arming pin (12) touches edge of thumb lever. Slightly compress ends of arming pin (12) until end of arming pin (12) enters the uppermost pin hole in the thumb lever (10) and fully insert arming pin (12).

9

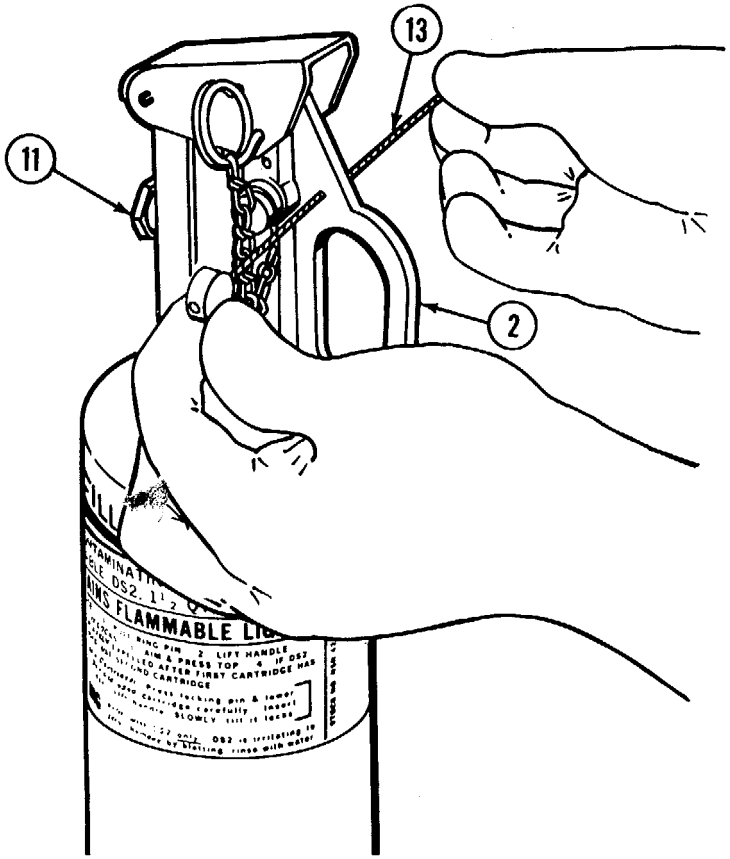

NOTE

The sealing wire need not be installed if the M11 DECON is used again very soon under combat ready conditions. The sealing wire should be installed at all times when DS2 is in the container and a filled nitrogen cylinder is installed.

a. Face nozzle (11) away from operator. Straighten sealing wire (13).

b. Pass end of sealing wire through hole in handle (2) from the left hand (front) side. Pull wire until lead seal rests against left side of handle (2).

2-5. OPERATING PROCEDURES (CONT).

a. *Filling the M11 DECON (Cont).*

10

Fold wire back and thread end the wire through center of the spring pin hole (14) (pivot roll I of handle) from the right hand side. Pull wire tight.

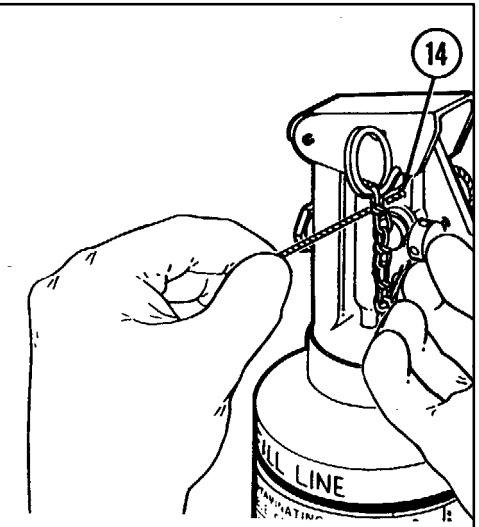

11

Thread end of wire through large loop in arming pin (12) and the hole in the sealing wire (13); PL wire tight.

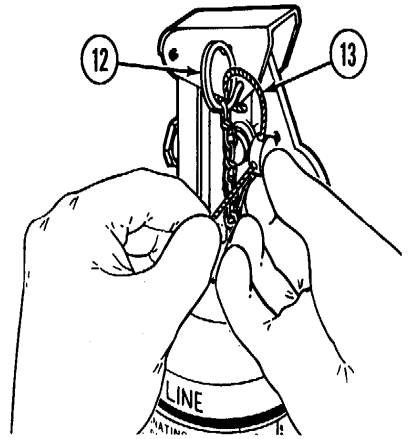

12

a. Thread end of wire through lead seal hole again from same direction and pull tight.

b. Crimp lead seal down on the wire to secure the sealing wire (13), handle (2), thumb lever (10), and arming pin (12) using pliers if available. Break/trim off excess wire. 11 tools are not available, notify unit maintenance as soon as possible.

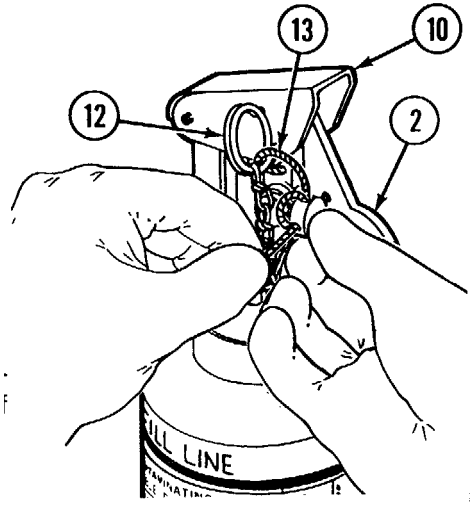

13

Position base of container on ledge of bracket (15). Fasten strap (16) around container (5) and tighten.

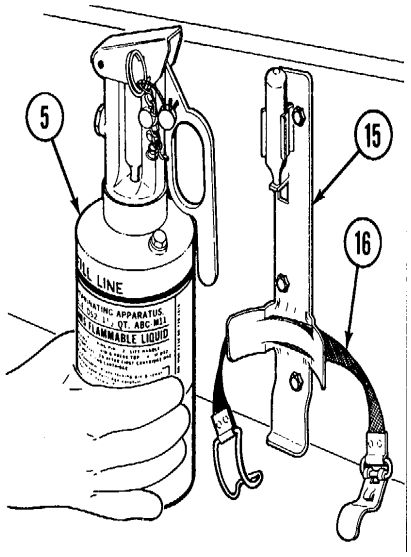

b. *Operating the M11 DECON.*

NOTE

These instructions are given for operating with DS2 filled container. For training use same instructions, but in place of DS2 use a 50/50 mixture of water and antifreeze.

14

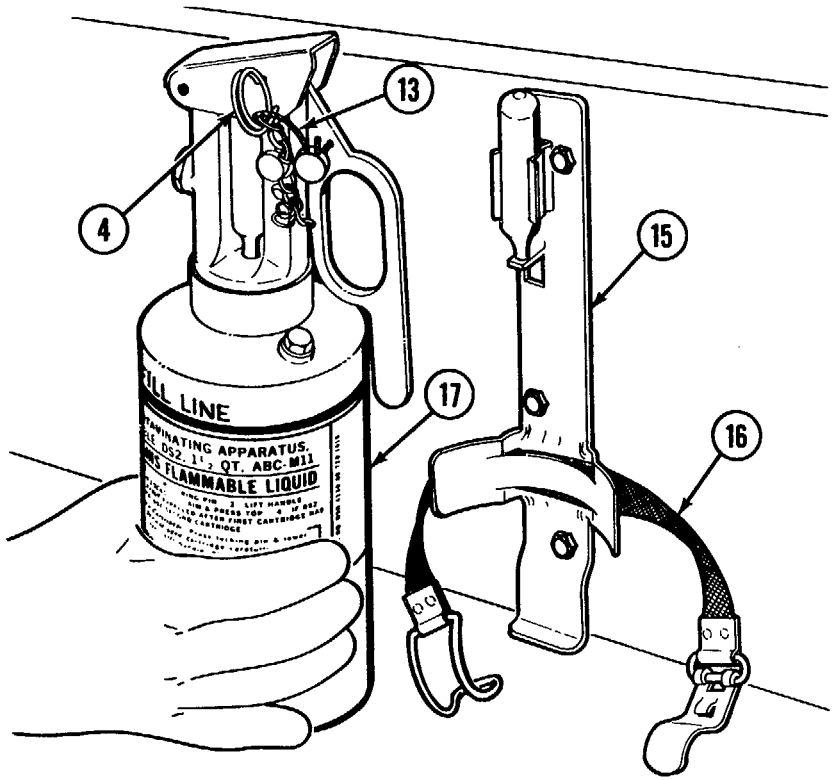

a. Unlatch bracket strap (16) and remove the M11 DECON (17) from the bracket (15).

b. Make sure sealing wire (13) is in place. If broken, do steps 14c. and 15 before going to step 16. If sealing wire is not broken or missing, start with step 16.

c. Pull arming pin (4).

15

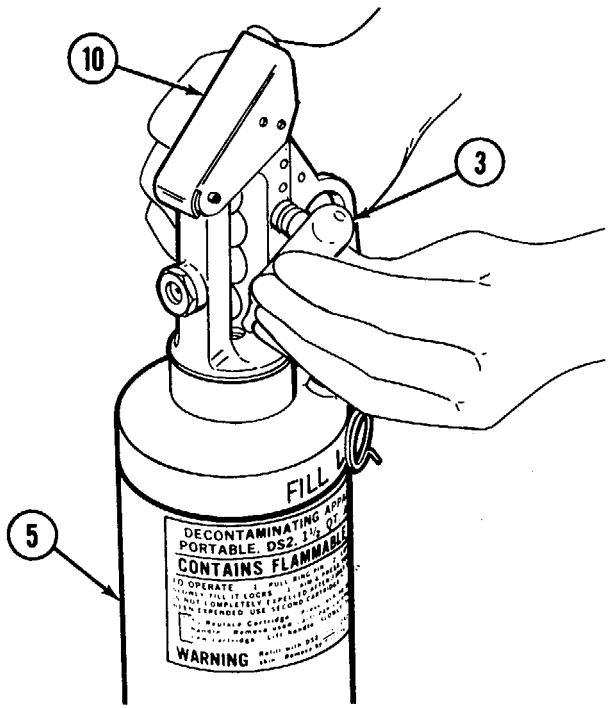

WARNING

Nitrogen cylinder is highly pressurized. Misuse of nitrogen cylinder can cause personal injury.

Before servicing or maintaining the M11 DECON, be sure that it is not pressurized by removing nitrogen cylinder, pointing nozzle away from personnel, and depressing thumb lever.

Lift up on thumb lever (10) and carefully lift nitrogen cylinder (3) out of hole. Check neck end of nitrogen cylinder to see if the seal has been punctured. If seal has been punctured, the container (5) may be pressurized.

2-5. OPERATING PROCEDURES (CONT).

b. *Operating the Ml 11 DECON (Cont)*.

16

a. Take the M11 DECON to area to be decontaminated. Pull arming pin (12) to break sealing wire. Raise handle (2) fully. Aim nozzle (11) into safe area or area to be decontaminated. Press down on thumb lever (10) and release all pressure and any fluid that may be present. When all pressure and fluids have been exhausted, release thumb lever (1 0).

NOTE

When spraying DS2, you may use chassis and running gear brush (item 2, app E) to remove thickened toxic agent deposits.

b. Continue spraying using the replacement nitrogen cylinder until the M11 DECON stops spraying liquid.

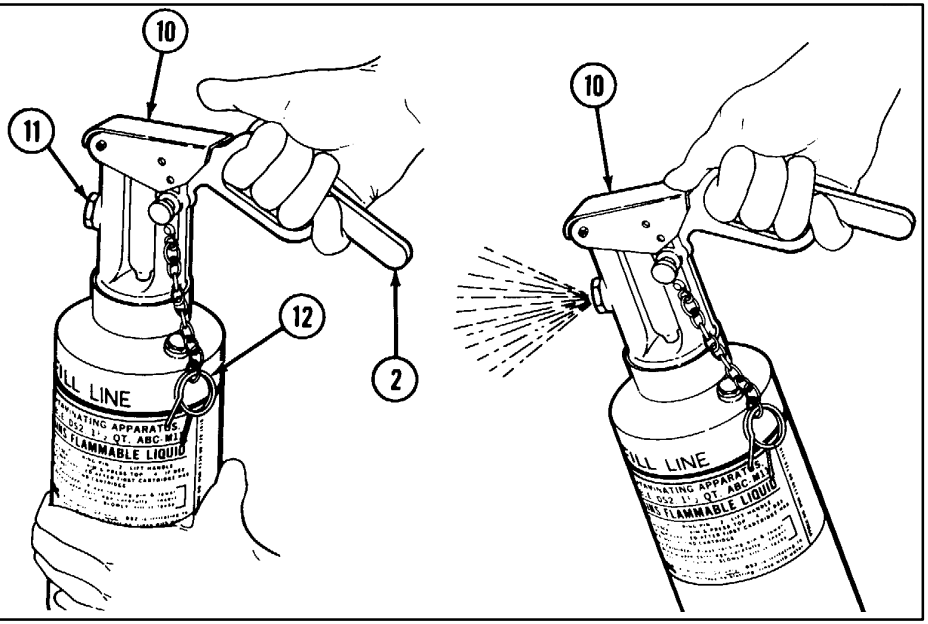

2-6. OPERATING INSTRUCTIONS ON IDENTIFICATION PLATES.

At one time, M11 DECONs were manufactured with a clip-on metal identification band. These metal bands are now obsolete and should be removed and replaced, by unit maintenance, with the new adhesive backed identification plate (see illustration). The information on the old metal band is incorrect.

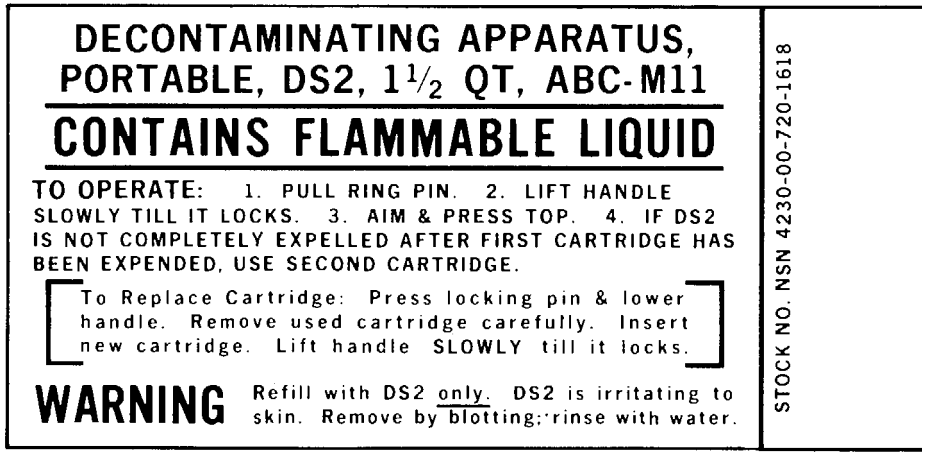

Section IV. OPERATION UNDER UNUSUAL CONDITIONS

2-7. OPERATION IN UNUSUAL WEATHER.

WARNING

In extreme cold temperatures, wear NBC protective rubber gloves INSIDE arctic mittens. Change mittens if they become soaked with DS2 since DS2 can damage the rubber gloves.

a. *Cold Weather*.

(1) The M11 DECON is designed to perform in a temperature range of -25°F to 120°F (-31 .6°C to 49°C). DS2 becomes thicker as the temperature drops. The thickened DS2 streams when pressurized. If DS2 streams, release thumb lever, lower handle, raise thumb lever, remove and replace nitrogen cylinder, lower thumb lever, and raise handle slowly.

NOTE

Normally one nitrogen cylinder charge will be used. In cold weather (below freezing) charging the container with a second nitrogen cylinder is permissible if inadequate pressure is developed. Never use more than the second nitrogen cylinder.

When spraying DS2, you may use chassis and running gear brush (item 2, app E) to remove thickened toxic agent deposits.

(2) Resume spraying operation.

b. *Dusty or Sandy Areas*. In dusty or sandy areas the small nozzle hole may become clogged. Apply a piece of pressure sensitive tape (item 14, app E) over the nozzle. Form pull tabs at each end of tape for easy removal from nozzle. Remove tape before operating the equipment.

c. *Tropics/Salt Spray Areas*. In salty areas keep the M1 1 DECON protected as much as possible. Clean more frequently. Heat and humidity will not affect the operation.

2-8. EMERGENCY DECONTAMINATING PROCEDURES.

NOTE

Refer to appendix A for listing of manuals that contain additional information on decontamination.

CHAPTER 3

OPERATOR MAINTENANCE INSTRUCTIONS

Section I. LUBRICATION INSTRUCTIONS

3-1. LUBRICATION INSTRUCTIONS. There are no lubrication requirements on the M11 DECON.

Section II. TROUBLESHOOTING PROCEDURES

3-2. GENERAL.

a. This table lists the common malfunctions which you may find during the operation or maintenance of the M1 1 DECON or its components. You should perform the tests/inspections and corrective actions in the order listed.

b. This manual cannot list all malfunctions that may occur, nor all tests or inspections and corrective actions. If a malfunction is not listed (except when malfunction and cause are obvious) or is not corrected by listed corrective actions, notify your supervisor.

TROUBLESHOOTING

MALFUNCTION TEST OR INSPECTION CORRECTIVE ACTION
1. BRACKET WILL NOT HOLD M11 DECON SECURELY.
Step 1. Latch on strap improperly hooked. Hook latch and secure.
Step 2. Check for sprung or damaged latch. Notify unit maintenance.

2. M11 DECON DOES NOT SPRAY WHEN THUMB LEVER IS PRESSED.

Step 1. Check that handle is raised.
Raise handle slowly, then resume spraying.

Step 2. Check nozzle hole for rust or corrosion.
Notify unit maintenance.

Step 3. Check whether nitrogen cylinder is empty.

a. Lower handle, raise thumb lever, remove nitrogen cylinder, and check neck end to see if cylinder seal was punctured. If punctured, install new nitrogen cylinder, raise handle slowly, and resume spraying by pressing thumb lever down.

b. If still no spray, notify unit maintenance.

c. If cylinder was not punctured, notify unit maintenance.

Step 4. Check whether nitrogen cylinder seal was punctured by pin but is not spraying. If not, notify unit maintenance.

3. M11 DECON SPRAYS/LEAKS AROUND NITROGEN CYLINDER NECK WHEN HANDLE IS RAISED.

Lower handle, lift thumb lever, remove nitrogen cylinder, and inspect nitrogen cylinder hole for missing or damaged O-ring.
Notify unit maintenance.

4. M11 DECON LEAKS AROUND TOP OF CONTAINER.

Step 1. Check to see if spray head assembly is handtight in the container.
Tighten spray head assembly and container.

Step 2. Vent all pressure by pressing thumb lever. Unscrew spray head assembly from container and inspect for missing, cut, or deformed O-rings.
Notify unit maintenance.

Section III. OPERATOR MAINTENANCE PROCEDURES

3-3. DECONTAMINATING APPARATUS, ABC-M11.

This task covers service.

INITIAL SETUP

Materials/Parts
Chassis and running gear brush (item 2, app E)
Corrosion inhibitor (item 9, app E)
General purpose detergent (item 4, app E)

SERVICE

1

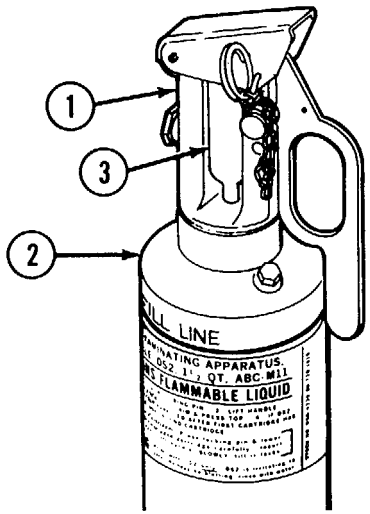

a. Mix general purpose detergent in clean water according to manufacturer's instructions on detergent container.

b. Using a chassis and running gear brush and the soapy water, scrub external surfaces of the spray head assembly (1), container (2), and nitrogen cylinder (3). Scrub until all signs of dirt, mud, and corrosion are removed. Rinse with clean water and air dry.

2

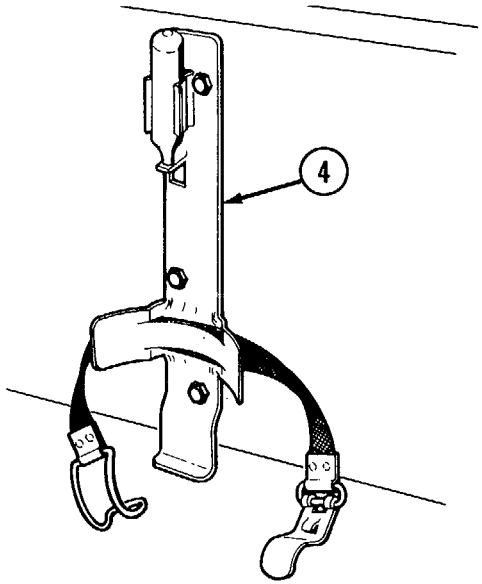

Scrub the bracket (4) with the soapy water and chassis and running gear brush. Scrub the metal parts until all dirt and corrosion have been removed. Rinse with clean water and air dry. Scrub the strap until all dirt and signs of mildew or fungus have been removed. Rinse with clean water and air dry.

CHAPTER 4

UNIT MAINTENANCE INSTRUCTIONS

Section I. REPAIR PARTS, SPECIAL TOOLS, TMDE, AND SUPPORT EQUIPMENT

4-1. COMMON TOOLS AND EQUIPMENT. For authorized common tools and equipment refer to the Modified Table of Organization and Equipment (MTOE) applicable to your unit.

4-2. SPECIAL TOOLS, TMDE, AND SUPPORT EQUIPMENT. No special tools are required for unit maintenance. Tools and test equipment are listed in appendix B.

4-3. REPAIR PARTS. Repair parts are listed and illustrated in appendix F of this manual.

Section II. SERVICE UPON RECEIPT

4-4. SERVICE UPON RECEIPT.

NOTE

Normally each M11 DECON is packaged in a fiberboard box. Twelve individual M11 DECONS are further packaged into a larger wooden or cardboard box. When receiving large shipment lots, record lot and year of manufacture for record purposes.

a. *General*. A new M11 DECON is received individually packaged in a dry, unserviced condition. The container assembly should only have a rust inhibitor powder in the container. The Ml 11 DECON will be strapped to the bracket.

b. *Unloading*. Avoid damaging the equipment. Carefully lift the large wooden or fiberboard boxes from the carrier.

SERVICE UPON RECEIPT

LOCATION/ITEM	ACTION	REMARKS
1 M11 DECON/ All parts	a. Inspect the equipment for damage incurred during shipment. If the equipment has been damaged, report the damage on SF 364, Report of Discrepancy (ROD). b. Check the equipment against the packing slip to see if the shipment is complete. Report all discrepancies in accordance with the instructions of DA PAM 738-750. c. Check to see whether the equipment has been modified. (Refer to DA PAM 310-1.) d. Check that M11 DECON has adhesive-backed identification plate securely attached. Refer to page 4-18 if label is loose or is of metal band type.	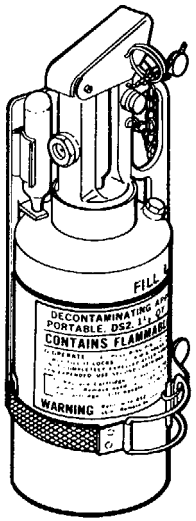
2 M11 DECON/ Spray head assembly	Check that sealing wire (1) is installed properly. Make sure it secures the arming pin (2), thumb lever (3), and handle (4). If wire is broken, missing, or installed improperly, check to see if nitrogen cylinder (5) is empty. (Refer to page 2-2.) If empty, replace nitrogen cylinder.	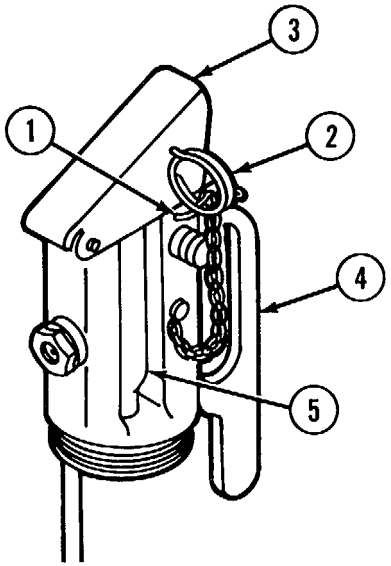

3 M11 DECON/ Bracket

a. Check bracket (6) for rust or corrosion. If rust or corrosion is found, remove it with a wire brush and spot paint (see TM 43-0139).

b. Check latch (7). Be sure latch (7) locks damp (8).

c. Be sure that a filled nitrogen cylinder (5) is installed in its dip (9).

d. Check to see if three screws (10), washers (11), and nuts (12) are packed with the M11 DECON.

NOTE

M11 DECON is to be placed in storage or issued to the user after above services have been completed. DO NOT FILL container with DS2 at this time. Refer to TM 740-90-1, Administrative Storage of Equipment, for further information on storage.

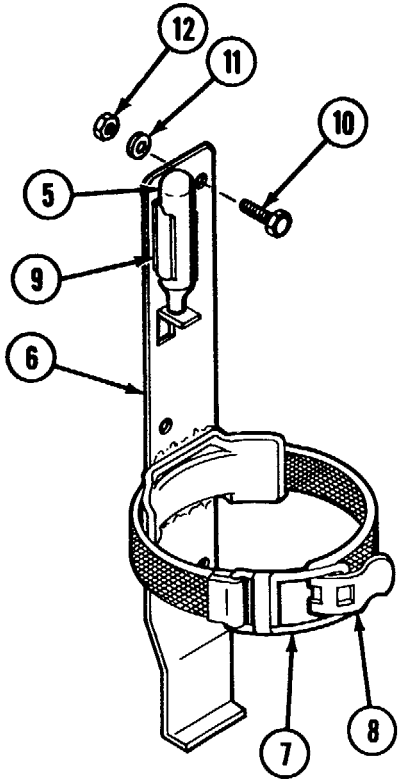

Section III. UNIT PREVENTIVE MAINTENANCE CHECKS AND SERVICES (PMCS)

4-5. PREVENTIVE MAINTENANCE CHECKS AND SERVICES (PMCS).

a. *General*. Your PMCS table lists the inspections and care of your equipment required to keep it in good operating condition. The procedure column of your PMCS table tells you how to do the required checks and services. Carefully follow these instructions.

b. *Item Number Column*. Checks and services are numbered in chronological order. Use this column as a source of item numbers for the "TM Number" column on DA Form 2404, Equipment Inspection and Maintenance Worksheet, in recording results of PMCS.

c. *Item To Be Inspected Column*. The items listed in this column are divided into groups indicating the portion of the equipment of which they are a part, for example, "DECONTAMINATING APPARATUS." Under these groupings, the items to be inspected are identified by as few words as possible, usually by the common name.

d. *Procedures Column*. This column briefly describes the procedure by which the check is to be performed. It contains all the information required to accomplish the checks and services.

UNIT PREVENTIVE MAINTENANCE CHECKS AND SERVICES - QUARTERLY SCHEDULE

Item No.	Item to be inspected	Procedures
		DECONTAMINATING APPARATUS
1	M11 DECON	Perform operator preventive maintenance checks and services (p 2-2 and 2-3).
2	External Surfaces	Check condition of paint and repaint if necessary. See TM 43-0139.
3	Markings and Identification	Check that identification plate is current, clean, legible and properly fastened. Replace if required (p 4- 18). Check condition of stenciled markings and touch up if necessary.
4	Container Insides	Check internal surfaces of container for excessive rust, scaling, and corrosion. Clean or replace if required.
5	Bracket	Check bracket for corrosion, chipped paint, excessive rust, or scaling. Clean or replace if required.
		Check strap for wear or cuts. Replace bracket if required.
		Check for missing or loose bracket hardware. Tighten or replace hardware.

SPRAY HEAD ASSEMBLY

6	O-ring	Inspect large O-ring for splits, cracks or distortion and snug fit on threads. If unserviceable, replace with new O-ring.
7	O-ring	Inspect nitrogen cylinder hole O-ring for splits, cracks or distortion and proper seating. If unserviceable, replace with new O-ring.
8	Nitrogen Cylinder Hole	Check nitrogen cylinder hole in sprayer head to make sure hole is free of dirt and debris. If dirt or debris is present, clean out hole.
9	Nozzle Hole	Check the nozzle opening in the sprayer head to be sure hole is free from dirt or debris. If dirt is present, clean out hole.

Section IV. UNIT TROUBLESHOOTING PROCEDURES

4-6. TROUBLESHOOTING.

a. This section contains troubleshooting information for locating and correcting most of the operating troubles which may develop with the Ml 1 DECON. Each malfunction for an individual component is followed by a list of tests or inspections which will help you to determine corrective actions to take. You should perform the tests/ inspections and corrective actions in the order listed.

b. This manual cannot list all possible malfunctions that may occur, nor all tests or inspections and corrective actions. If a malfunction is not listed (except when malfunction and cause are obvious) or is not corrected by listed corrective actions, notify your supervisor.

UNIT TROUBLESHOOTING

MALFUNCTION	TEST OR INSPECTION	CORRECTIVE ACTION

WARNING

Be sure to read all the WARNINGS in front of the manual before troubleshooting.

1. BRACKET WILL NOT HOLD M11 DECON SECURELY.

Step 1. Check for sprung or damaged latch (1).
Reshape latch (1) to normal curve. If latch cannot be reshaped, get a new bracket.

Step 2. Check for torn, damaged strap (2).
If it does not hold securely, get a new bracket.

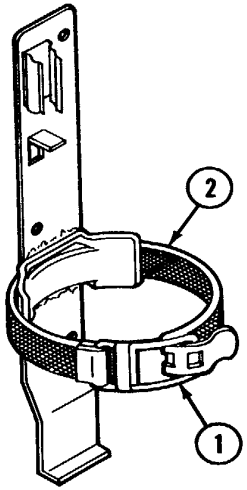

2. M11 DECON DOES NOT SPRAY WHEN THUMB LEVER IS PRESSED.

Step 1. Check to see if nozzle (3) is blocked with rust or corrosion.
Clean rust or corrosion from nozzle hole.

Step 2. Check to see if liquid or air sprays around nitrogen cylinder neck.
Replace missing or deformed O-ring.

Step 3. Check to see if piercing pin (4) is present and nitrogen cylinder is pierced.
If pin is broken or missing, replace spray head assembly.

3. M11 DECON LEAKS AROUND TOP OF CONTAINER (5).

Check for missing or deformed O-ring (6).
Vent pressure from container (5), unscrew spray head assembly (7) from container. Install new O-ring (6), and screw spray head assembly back into container.

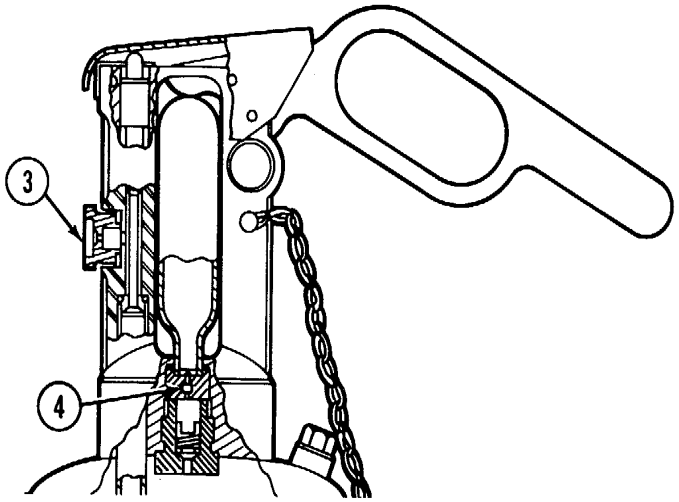

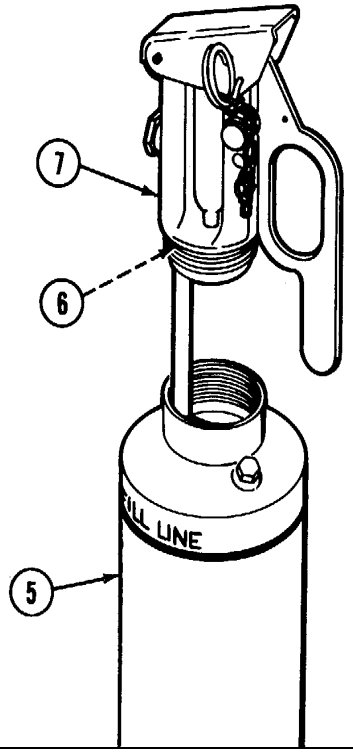

Section V. UNIT MAINTENANCE PROCEDURES

4-7. DECONTAMINATING APPARATUS, ABC-M11. I

This task covers:

a. Installation
b. Cleaning
c. Disassembly
d. Inspection/Repair
e. Reassembly

INITIAL SETUP

Tools and Special Tools
General Mechanic's Automotive Tool Kit SC 5180-90-CL-N26

Materials/Parts
Chemical and oil protective gloves (item 8, app E)
Corrosion inhibitor (item 10, app E)
Dry cleaning solvent (SD) (item 5, app E)
Epoxy coating (item 7, app E)
Forest green polyurethane coating (item 11, app E)
General purpose detergent (item 4, app E)
Pressure sensitive tape (item 14, app E)
Silicon compound (item 13, app E)
Wiping rag (item 12, app E)
Yellow enamel (item 6, app E)

Required
One quartermaster and chemical equipment repairman MOS 63J or equivalent MOS or personnel normally assigned in support of this equipment.

References
Refer to applicable TM for vehicle/equipment until M11 DECON is attached.

General Safety Instructions
Safety goggles will be worn during drilling of mounting holes. NBC clothing including mask, hood, and rubber gloves must be worn when handling DS2 or equipment exposed to DS2 until equipment is cleaned. Protective gloves shall be worn while using dry cleaning solvent.

INSTALLATION

1

WARNING

DS2 is combustible. M11 DECON should not be mounted near a fire extinguisher. This could cause confusion between the M11 DECON and fire extinguisher during an emergency.

Wear goggles for eye protection when drilling mounting holes.

2

CAUTION

Be sure to remove nitrogen cylinder from bracket when installing the bracket.

NOTE

Before installing the bracket, check the authorized equipment technical manual, local policy directives and SOPs to see if a standard location has been selected. If not, select a location the same as used on other equipment of a similar type. The location selected will provide space enough to hold the M11 DECON in the bracket in an upright position. It must not block or hamper any other installed equipment or controls. The bracket will not be mounted in such a way to cause injuries to personnel while performing routine duties. The M11 DECON mounting is determined by the type of equipment involved. Normally it will be internally mounted. It must be mounted in a vertical position. The bracket shall be installed on the authorized equipment using the three mounting holes in the bracket as guides as soon as possible on receipt of equipment. This task covers a typical installation. You may come across an installation that is not typical. You will have to adapt these procedures to fit that installation.

The bracket will be installed on the authorized equipment and the M11 DECON placed in storage if not required.

3

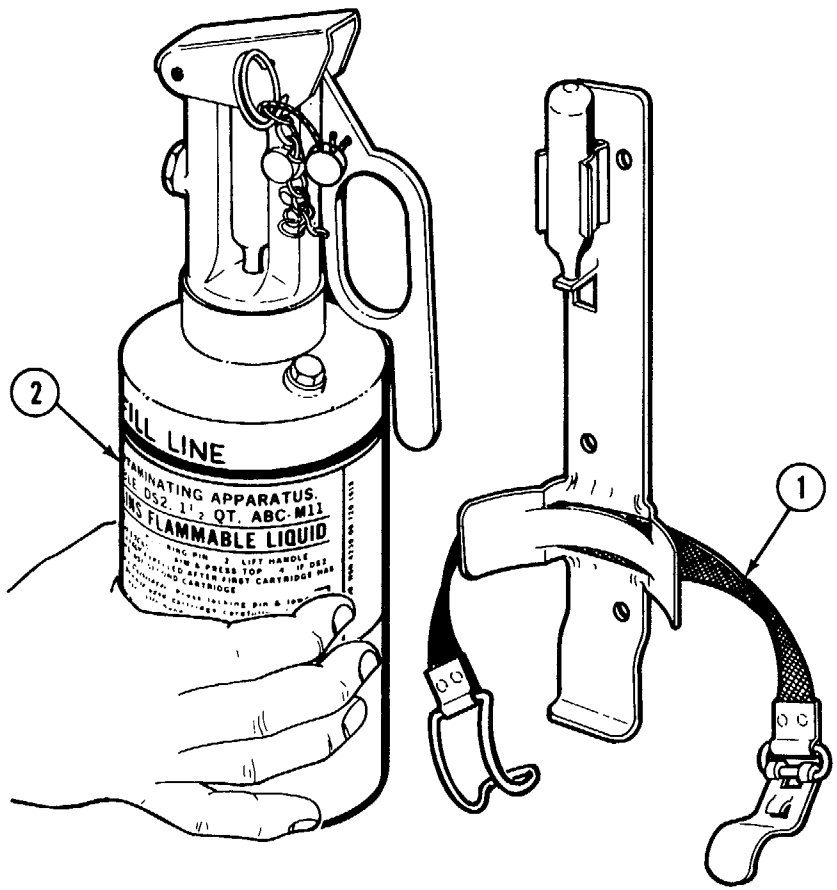

Unlatch bracket strap latch (1) and remove the M11 DECON (2).

4-7. DECONTAMINATING APPARATUS, ABC-M11 (CONT).

INSTALLATION (CONT)

4

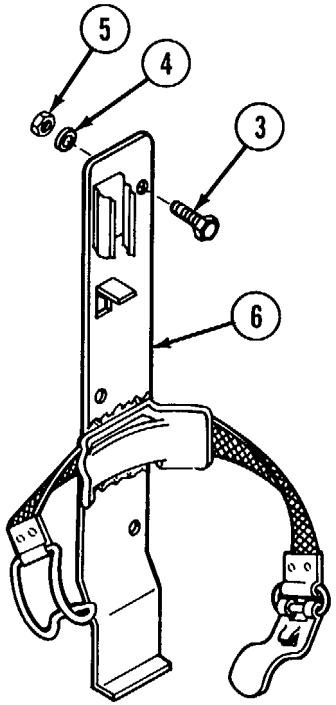

If three hexagon head cap screws (3), lock washers (4), and hexagon plain nuts (5) are installed, unscrew and remove them from the holes in the bracket (6).

5

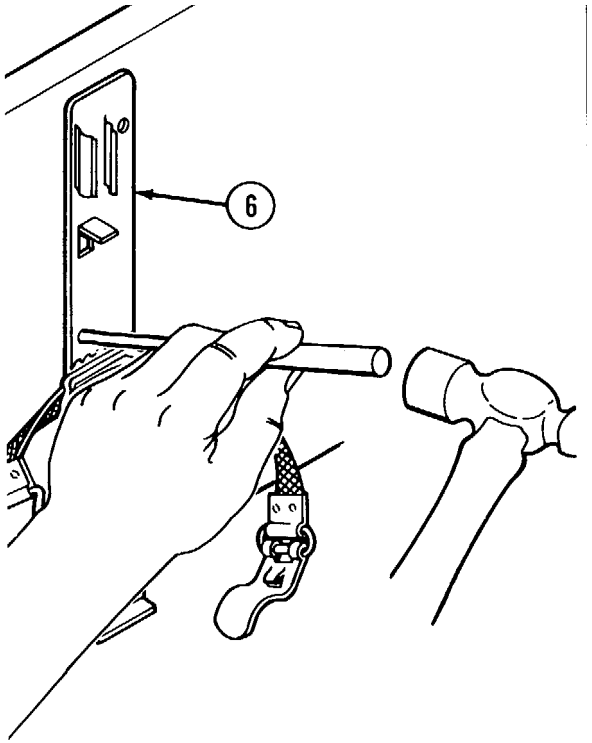

a. Place the bracket (6) against selected mounting area.

b. Hold bracket firmly against the surface. Using middle hole in the bracket as a guide, center punch the surface.

6

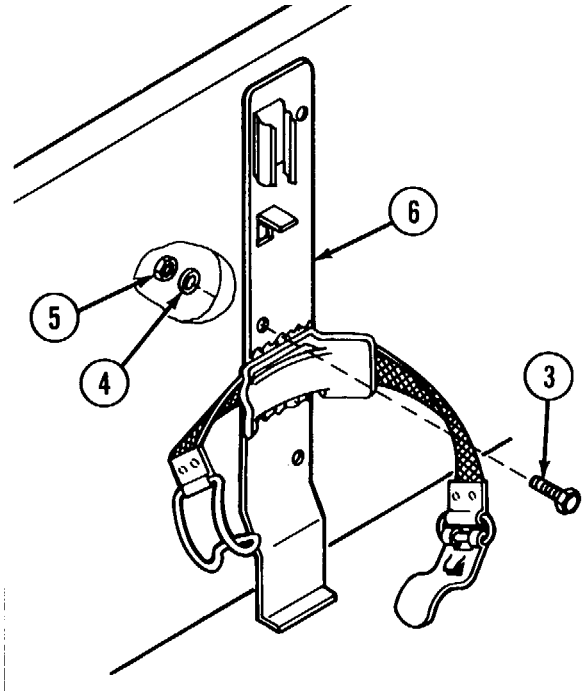

a. Use an electric drill and 17/64 twist drill bit. Drill a hole through the surface.

b. Insert one hexagon head cap screw (3) through the center hole in bracket (6). From the backside of mounting surface install a lockwasher (4) and hexagon head plain nut (5). Tighten.

7

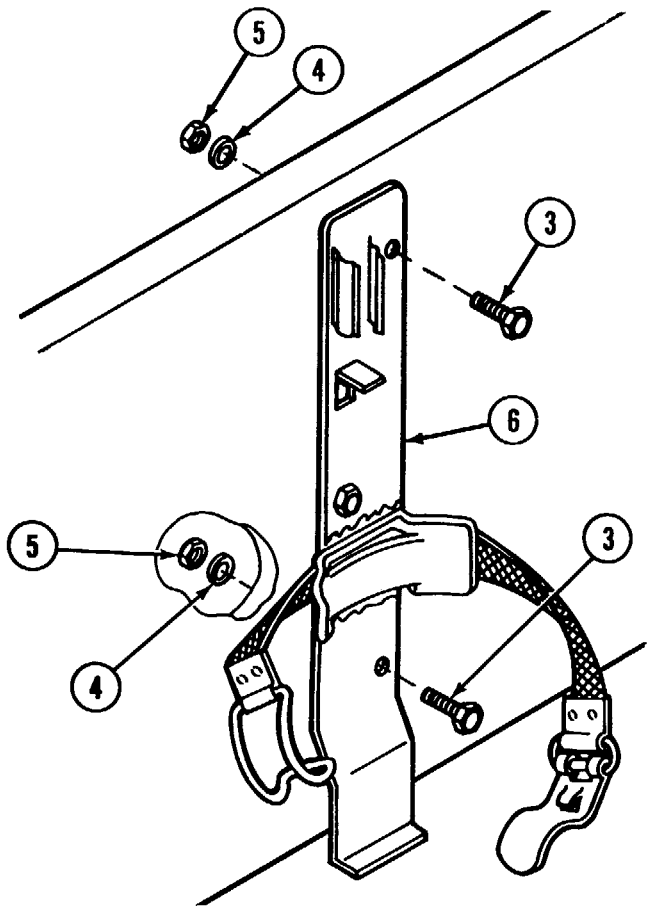

a. Move the bracket (6) top edge left or right until it is vertical.

b. Use upper hole in bracket as a guide. Center punch and drill the second hole. Install a hexagon head cap screw (3) through the bracket (6) and through the surface. From the backside of mounting surface install second lock washer (4) and hexagon plain nut (5). Tighten.

c. Install the third screw (3), lockwasher (4), and nut (5). Tighten.

8

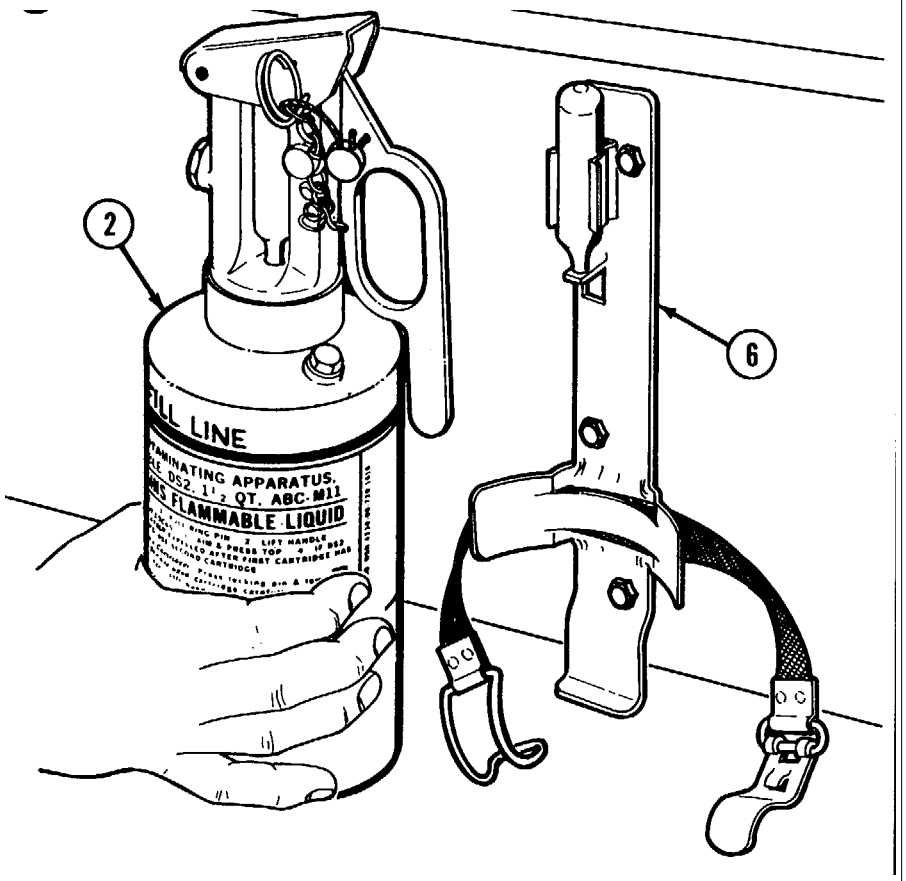

a. Using primer coat and forest green enamel, paint the screws and nuts to cover any shiny surfaces.

NOTE

Be sure to put the nitrogen cylinder in the bracket before mounting your M11 DECON.

b. Position the M11 DECON (2) onto the bracket (6). Fasten strap around the M11 DECON and latch.

4-7. DECONTAMINATING APPARATUS, ABC-M11 (CONT).

INSTALLATION (CONT)

9

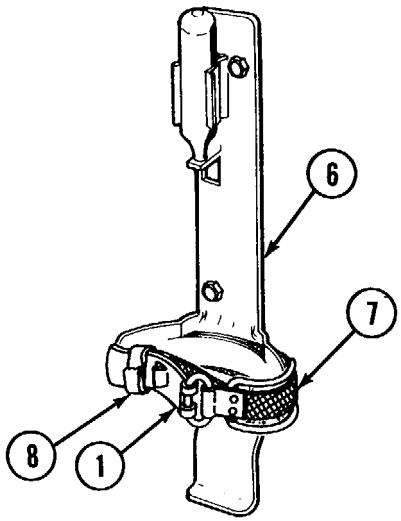

NOTE

If M11 DECON is being placed in storage, secure the strap to prevent flapping with pressure sensitive tape.

a. Place the wire loop end of strap (7) on outer side of mounting bracket (6) where the strap comes out. Use single loop of pressure sensitive tape to secure latch.

b. Pull strap tight and place latch (1) part of strap against nylon strap.

c. Use single loop of pressure sensitive tape (8) around latch and nylon strap to prevent strap from flapping loosely.

CLEANING

1

WARNING

Be sure M11 DECON is not pressurized.

Read all the WARNINGS in the front of this manual before performing any maintenance on the M11 DECON.

NBC protective clothing including mask, hood, and rubber gloves must be worn when handling DS2 or equipment exposed to DS2 until the equipment has been cleaned.

The M11 DECON may be filled with DS2 or with water/antifreeze mixture. It should not be pressurized.

a. If the M11 DECON is installed, remove from bracket.

b. Remove nitrogen cylinder (page 2-5), lift handle, point nozzle away from you and press thumb lever until all pressure is relieved.

c. Unscrew the spray head assembly (9) from the container (10).

d. Carefully pour the fluid into assigned container and dispose in accordance with local SOP.

NOTE

All the fluid cannot be poured out of the container through the large opening because of the internal lip.

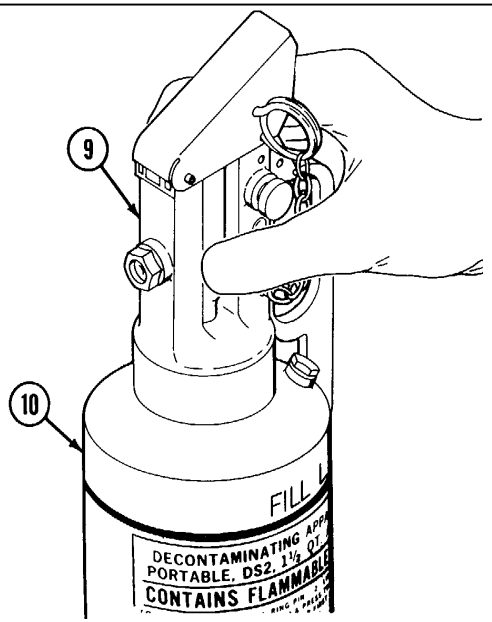

2

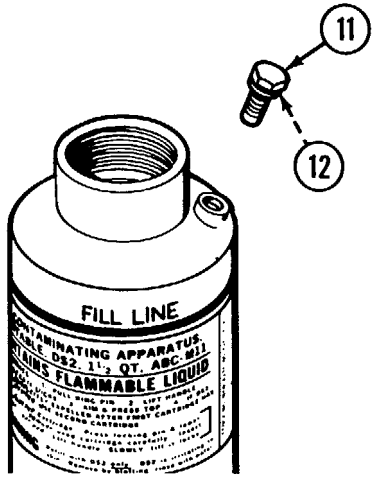

Unscrew and remove the steel machine bolt (11) with the copper flat washer (12) attached.

3

a. Carefully pour the remaining DS2 fluid out of the E tapped hole (13) from which the steel machine bolt was removed.

b. After removing DS2/fluid from container (10), flush inside and outside surfaces with mixture of water general purpose detergent.

c. Agitate container (10) in clean hot water.

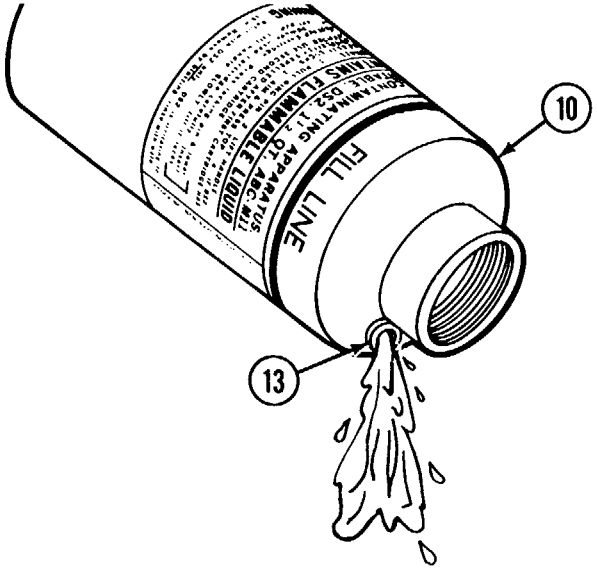

4

a. Turn spray head assembly (9) upside down.

b. Press thumb lever (14) while pouring water and general purpose detergent mixture slowly into the strainer (15).

c. Agitate spray head assembly in clean hot water.

NOTE

The flow of water coming out of the nozzle hole will be very slow. If a large container is available, agitating the spray head assembly with thumb lever pressed will force the mixture through the siphon tube faster.

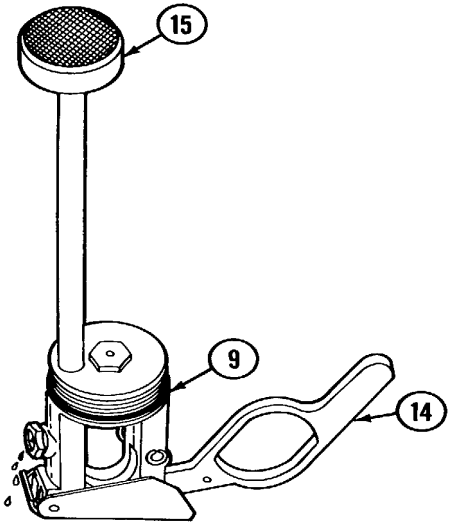

4-7. DECONTAMINATING APPARATUS, ABC-M11 (CONT).

CLEANING (CONT)

5

WARNING
To prevent injury to hands, wear protective gloves at all times when using dry cleaning solvent.

a. Wash spray head assembly (9) and container (10) with dry cleaning solvent.

b. Press thumb lever (14) down and pour dry cleaning solvent into the strainer or agitate the spray head assembly (9) in dry cleaning solvent to force solvent through siphon tube.

c. Pour dry cleaning solvent out of container (10), shake off excess solvent and dry with wiping rag inside and out. If rust is severe enough to break loose and block strainer screen, replace the container.

d. Shake spray head assembly (9) to remove excess solvent. Dry with wiping rag.

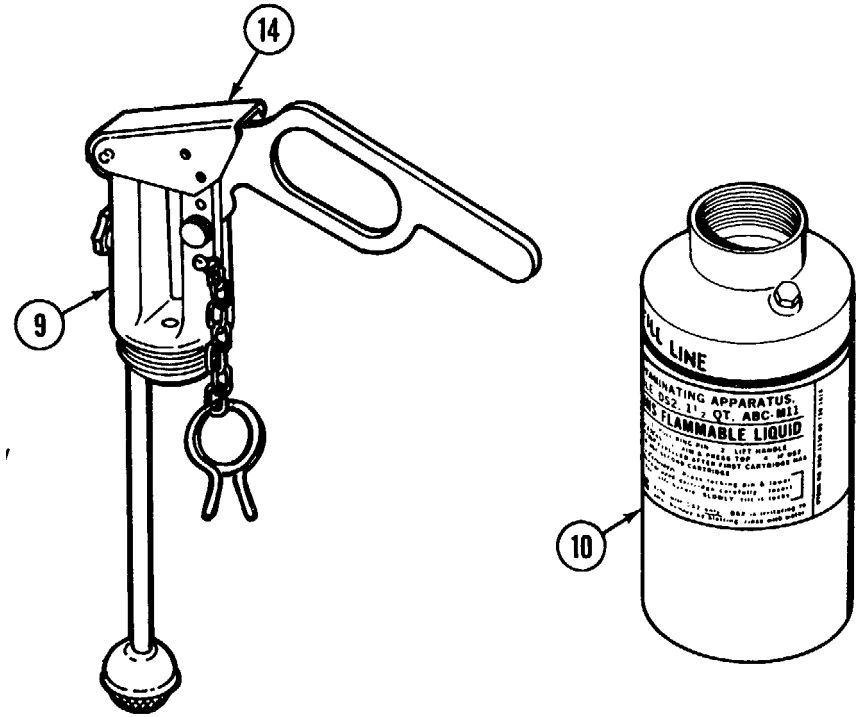

6

a. Remove rust from external surface of container.

b. If required, repaint the fill line seven-inches from bottom of the container using pressure sensitive tape to make the 1/16 inch wide band.

c. Touch up the paint with epoxy primer coating, forest green polyurethane coating, and yellow enamel.

7

a. Put about 1/2 teaspoon of corrosion inhibitor into the container and replace spray head assembly.

b. Swirl container to allow corrosion inhibitor to coat internal surfaces and then shake well.

8

a. Apply silicone compound to internal threads in the container (10) openings and the external threads of the steel machine bolt (11) and spray head assembly (9).

b. Make sure copper flat washer (12) is installed on the steel machine bolt (11).

c. Install steel machine bolt (11) in container (10) and handtighten, then tighten 1/4 turn more with wrench.

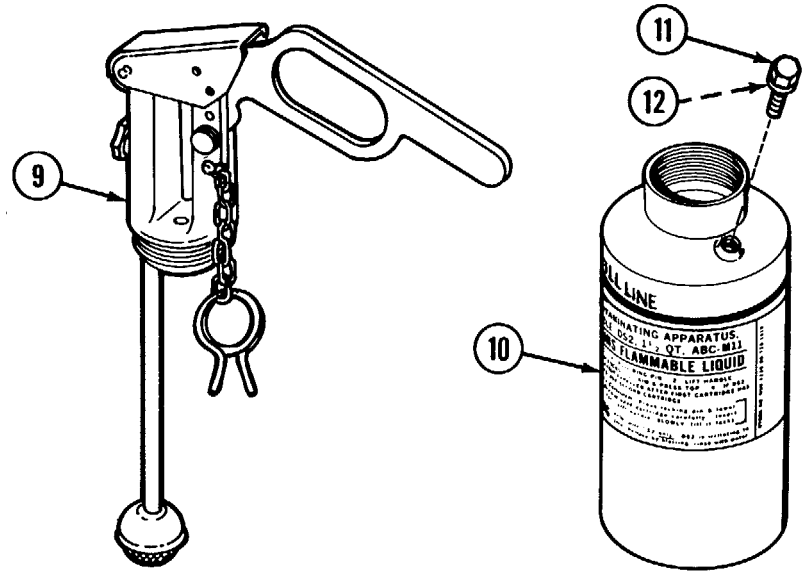

9

CAUTION

If spray head assembly is left loose, rust will develop more quickly inside the container.

Screw spray head assembly (9) into container (10) and handtighten.

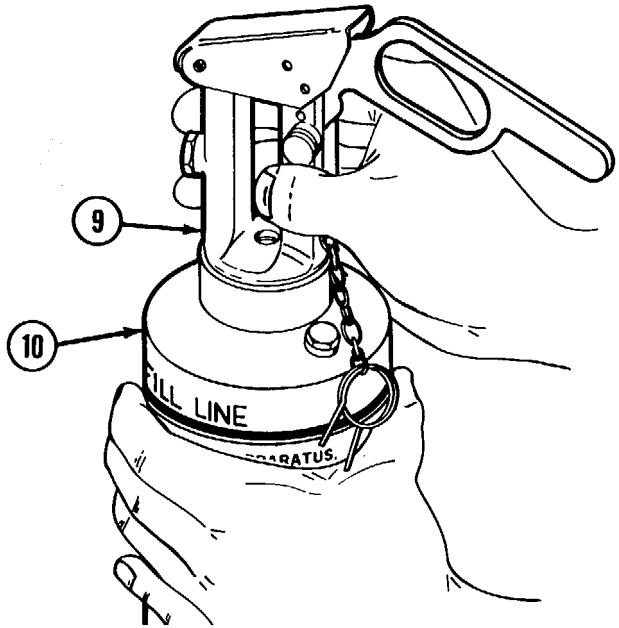

4-7. DECONTAMINATING APPARATUS, ABC-M1 (CONT).

CLEANING (CONT)

10

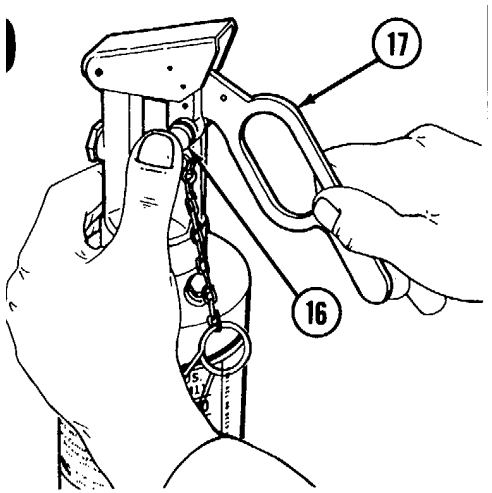

Press in on handle locking pin (16) and lower handle (1 7).

11

WARNING

Nitrogen cylinder is highly pressurized. Misuse of nitrogen cylinder can cause personal injury.

Lift up on thumb lever (14). Install a filled nitrogen cylinder (18), and lower thumb lever (14).

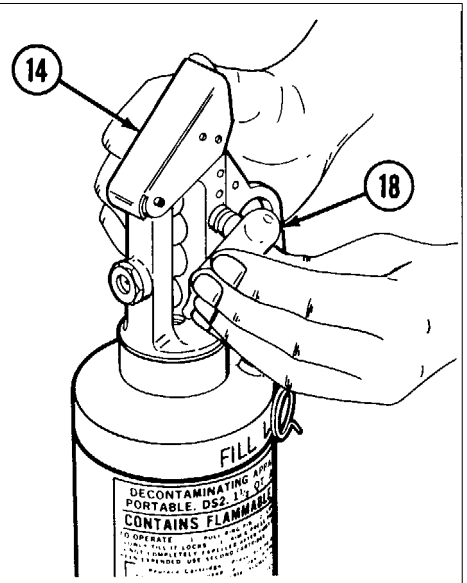

12

a. Install arming pin (19) to secure thumb lever (14) and handle (1 7).

b. Install a new sealing wire (20) (page 2-7) to secure the arming pin (19), thumb lever (14), and handle (17).

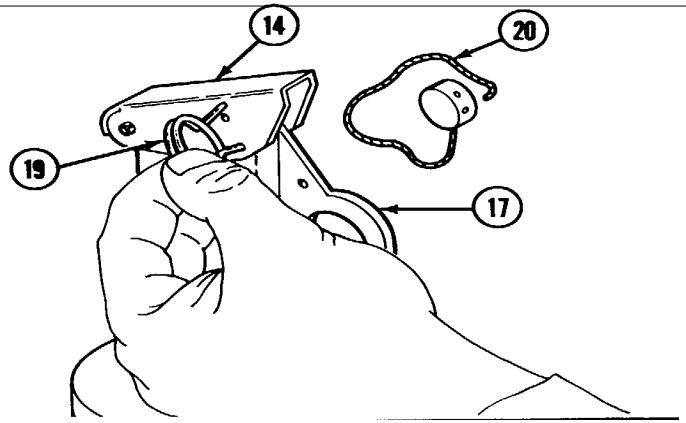

4-7. DECONTAMINATING APPARATUS, ABC-M1 (CONT).

DISASSEMBLY

NOTE
Disassemble only as far as necessary for repair.

Remove parts in order indicated on illustration.

LEGEND
1. Sealing wire
2. Nitrogen cylinder
3. Spray head assembly
4. Steel machine bolt
5. Copper flat washer
6. Identification plate
7. Container
8. Hexagon plain nuts (3 ea)
9. Lock washers (3 ea)
10. Hexagon head cap screws (3 ea)
11. Bracket

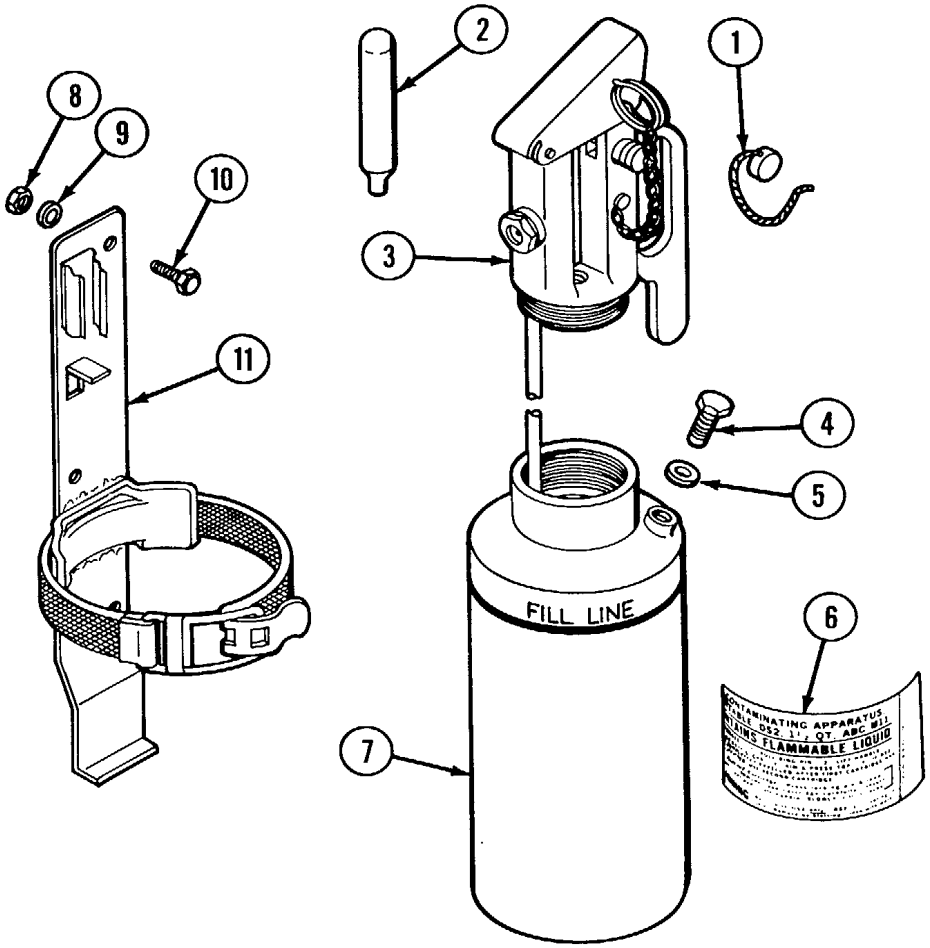

4-7. DECONTAMINATING APPARATUS, ABC-M11 (CONT).

INSPECTION/REPAIR I

a. Inspect identification plate. Replace if unreadable or loose.

b. Inspect inside of container for rust. Rust discoloration is not reason to replace container. Clean container when rust is flaking. Replace container if rust is severe enough to break loose and block the strainer screen.

c. Inspect bracket and outside of container for corrosion, rust, and chipped or marred paint. Remove the corrosion and paint as needed in accordance with TM 43-0139.

d. Apply a light coat of silicone compound to all threads in the container, on the spray head assembly, and on the O-ring just above the threads on spray head assembly before installation.

REASSEMBLY

Replace any unserviceable authorized component. Reassemble in numerical order from 1 to 11.

LEGEND

1. Bracket
2. Hexagon head cap screws (3 ea)
3. Lock washers (3 ea)
4. Hexagon plain nuts (3 ea)
5. Container
6. Identification plate
7. Copper flat washer
8. Steel machine bolt
9. Spray head assembly
10. Nitrogen cylinder
11. Sealing wire

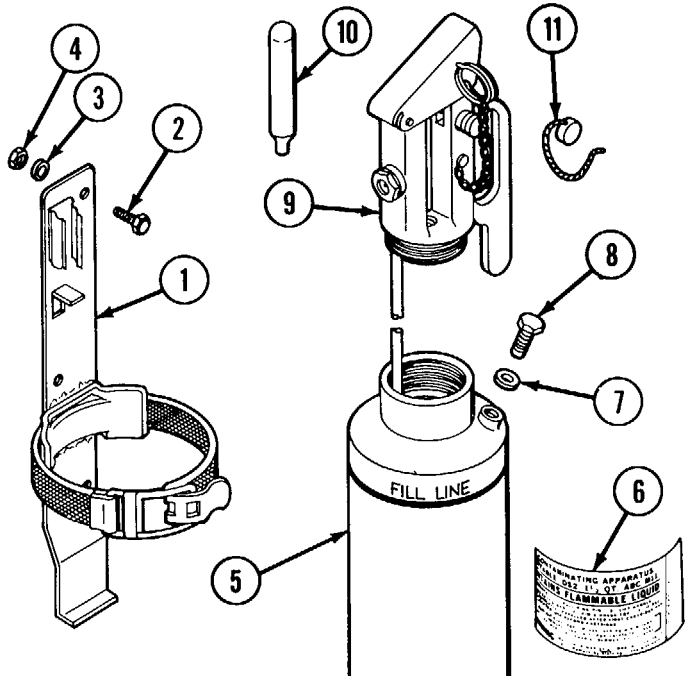

4-8. SPRAY HEAD ASSEMBLY.

This task covers:
a. Disassembly
b. Inspection/Repair/Cleaning
c. Reassembly

INITIAL SETUP

Tools and Special Tools
General Mechanic's Automotive Tool Kit SC 5180-95-CL-N26

Materials/Parts
Chemical and oil protective gloves (item 8, app E)
Dry cleaning solvent (SD) (item 5, app E)
General purpose detergent (item 4, app E)
Silicone compound (item 13, app E)
Wiping rag (item 12, app E)

Personnel Required
One quartermaster and chemical equipment repairer MOS 63J or equivalent MOS or personnel normally assigned in support of this equipment.

Troubleshooting References
See section IV of this chapter.

Equipment Condition
Spray head assembly removed from container.
May be contaminated with DS2.

General Safety Instructions
NBC protective clothing including mask, hood, and rubber gloves must be worn when handling equipment exposed to DS 2 until equipment has been cleaned.
Protective gloves shall be worn while using dry cleaning solvent.

DISASSEMBLY

NOTE
Disassemble only as far as necessary for repair.

Remove parts in order indicated on illustration.

LEGEND
1. Arming pin
2. Retaining ring
3. Handle locking pin
4. Helical torsion spring
5. O-ring
6. O-ring
7. Nozzle
8. Nozzle gasket
9. Spray head body

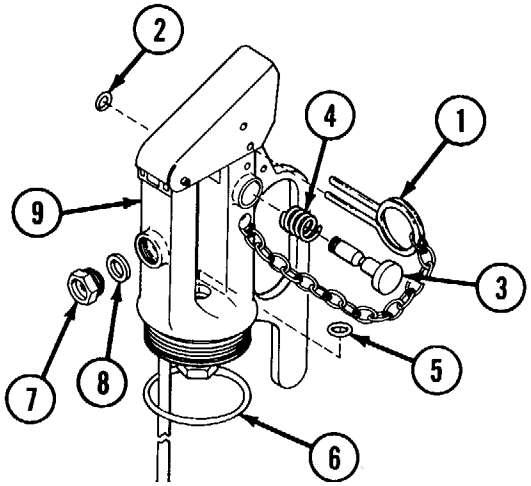

4-8. SPRAY HEAD ASSEMBLY (CONT).

INSPECTION/REPAIR/CLEANING

a. Inspect for cut, deformed, or missing O-rings. Replace O-rings if unserviceable.

b. Inspect for sprung or missing retainer ring. Replace if unserviceable or missing.

WARNING
To prevent injury to hands, wear protective gloves at all times when using dry cleaning solvent.

c. Wash all removed parts with general purpose detergent and hot water (see page 4-12). Then wash with dry cleaning solvent and wipe dry with wiping rags.

d. Apply a film of silicone compound to screw threads.

REASSEMBLY

a. Replace any unserviceable authorized components. Reassemble in numerical order from 1 to 9.

b. Handtighten nozzle, then tighten ¼ turn more with wrench.

LEGEND
1. Spray head body
2. Nozzle gasket
3. Nozzle
4. O-ring
5. O-ring
6. Helical torsion spring
7. Handle locking pin
8. Retaining ring
9. Arming pin

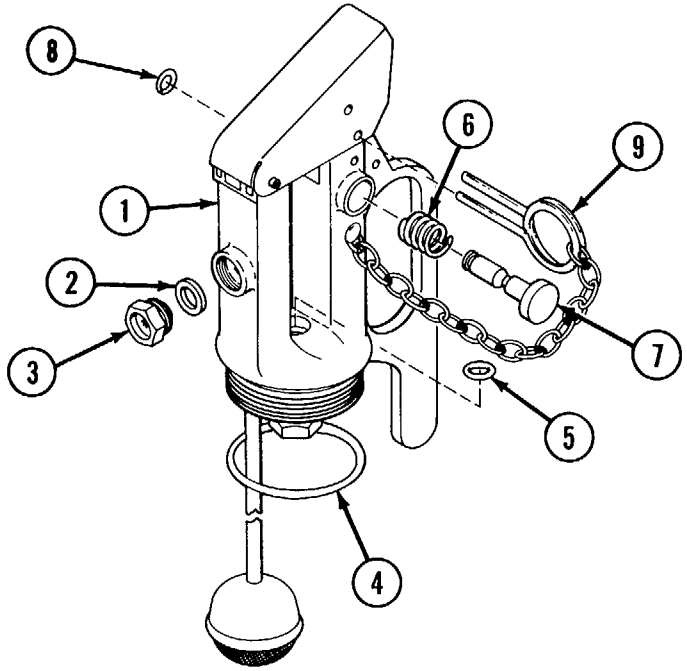

Section VI. PREPARATION FOR STORAGE OR SHIPMENT

4-9. PREPARATION FOR STORAGE OR SHIPMENT.

a. *Security.* Security of the M11 DECON will be maintained in accordance with AR 190-13.

b. *Packing.* Disassemble, clean, dry, and package the M11 DECON as follows:

(1) Remove the M1 1 DECON from the bracket.

(2) Remove spray head assembly and steel machine bolt with copper flat washer from the container.

(3) Clean internal and external surfaces of all rust and corrosion (p 4-12).

(4) Apply a light film of silicone compound (item 13, app E) to all O-rings.

(5) Apply a film of silicone compound (item 13, app E) to the screw threads on the spray head assembly, container, and steel machine bolt.

(6) Install steel machine bolt with copper flat washer attached in container and handtighten, then tighten 1/4 turn more with wrench.

(7) Pour about 1/2 teaspoon of corrosion inhibitor (item 9 or 10, app E) into the container.

(8) Screw spray head assembly onto container hand tight.

(9) Make sure nitrogen cylinder is installed and sealing wire secures the arming pin, thumb lever, and handle.

(10) Apply a strip of pressure sensitive tape (item 14, app E) over end of nozzle if storage area is dusty. Allow enough tape to fold back the ends to form pull tabs for easy removal.

NOTE

Bracket should not be removed from equipment for normal storage after it has been installed.

(11) Brackets that have to be placed in storage must have the mounting hardware (three hexagon head cap screws, lock washers, and hexagon plain nuts) installed.

(12) Install and secure M11 DECON in bracket with the handle rotated toward the mounting bracket approximately 30 degrees.

(13) Packaging is not required for storage. Place M1 1 DECON in storage where it cannot be damaged.

c. *Marking*. If the bracket is not stored with the M1 1 DECON, attach a maintenance tag to indicate the bracket is stored on the vehicle/equipment.

d. *Packaging.* Package in accordance with common carrier regulations for shipment. Minimum markings will be:

ADDRESS OF DESTINATION
WEIGHT AND CUBE
NITROGEN CYLINDER (MARKED-AS.REQUIRED BY CARRIER)

e. *Administrative Storage*. The M11 DECON will meet long term storage requirement of five years. Administrative storage will be in accordance with TM 740-90-1, Administrative Storage of Equipment.

APPENDIX A

REFERENCES

A-1. SCOPE. This appendix lists all field manuals and technical manuals referenced in this manual.

A-2. FORMS.

Equipment Inspection and Maintenance Worksheet	DA Form 2404
Quality Deficiency Report	SF 368
Recommended Changes to Publications and Blank Forms	DA Form 2028
Recommended Changes to Equipment Technical Manuals	DA Form 2028-2
Report of Discrepancy (ROD)	SF 364

A-3. FIELD MANUALS.

First Aid for Soldiers	FM 21-11
HTF, Nuclear, Biological and Chemical (NBC) Reconnaisance and Decontamination Operations	FM 3-87
NBC Decontamination	FM 3-5

A-4. TECHNICAL MANUALS.

Administrative Storage of Equipment	TM 740-90-1
Destruction of Chemical Weapons and Defense Equipment to Prevent Enemy Use	TM 43-0002-31
Painting Instructions for Field Use	TM 43-0139

A-5. MISCELLANEOUS PUBLICATIONS. I

Army Medical Department Expendable/Durable Items	CTA 8-100
Consolidated Index of Army Publications and Blank Forms	DA PAM 310-1
Expendable Items: (Except: Medical Class V, Repair Parts and Heraldic Items)	CTA 50-970
Maintenance Management Update	DA PAM 738-750
The Army Physical Security Program	AR 190-13

APPENDIX B

MAINTENANCE ALLOCATION CHART

Section I. INTRODUCTION

B-1. GENERAL

a. This section provides a general explanation of all maintenance and repair functions authorized at various maintenance levels.

b. The Maintenance Allocation Chart (MAC) in section II designates overall authority and responsibility for the performance of maintenance functions on the identified end item or component. The application of the maintenance functions to the end item or component will be consistent with the capacities and capabilities of the designated maintenance levels.

c. Section III lists the tools and test equipment (both special tools and common tool sets) required for each maintenance function as referenced from section II.

d. Section IV contains supplemental instructions and explanatory notes for a particular maintenance function.

B-2. MAINTENANCE FUNCTIONS. Maintenance functions will be limited to and defined as follows:

a. *Inspect*. To determine the serviceability of an item by comparing its physical, mechanical, and/or electrical characteristics with established standards through examination (e.g., by sight, sound, or feel).

b. *Test*. To verify serviceability by measuring the mechanical, pneumatic, hydraulic, or electrical characteristics of an item and comparing those characteristics with prescribed standards.

c. *Service*. Operations required periodically to keep an item in proper operating condition, i.e., to clean (includes decontaminate, when required), to preserve, to drain, to paint, or to replenish fuel, lubricants, chemical fluids, or gases.

d. Adjust. To maintain or regulate, within prescribed limits, by bringing into proper or exact position, or by setting the operating characteristics to specified parameters.

e. *Aline*. To adjust specified variable elements of an item to bring about optimum or desired performance.

f. *Calibrate*. To determine and cause corrections to be made or to be adjusted on instruments or test, measuring and diagnostic equipments used in precision measurement. Consists of comparisons of two instruments, one of which is a certified standard of known accuracy, to detect and adjust any discrepancy in the accuracy of the instrument being compared.

g. *Remove/Install*. To remove and install the same item when required to perform service or other maintenance functions. Install may be the act of emplacing, seating, or fixing into position a spare, repair part, or module (component or assembly) in a manner to allow the proper functioning of an equipment or system.

h. *Replace*. To remove an unserviceable item and install a serviceable counterpart in its place. "Replace" is authorized by the MAC and is shown as the 3d position code of the SMR code.

i. *Repair*. The application of maintenance services, including fault location/ troubleshooting, removal/installation, and disassembly/ assembly procedures, and maintenance actions to identify troubles and restore serviceability to an item by correcting specific damage, fault, malfunction, or failure in a part, subassembly, module (component or assembly), end item, or system.

j. *Overhaul*. That maintenance effort (service/action) prescribed to restore an item to a completely serviceable/operational condition as required by maintenance standards in appropriate technical publications (i.e., DMWR). Overhaul is normally the highest degree of maintenance performed by the Army. Overhaul does not normally return an item to like new condition.

k. *Rebuild*. Consists of those services/actions necessary for the restoration of unserviceable equipment to a like new condition in accordance with original manufacturing standards. Rebuild is the highest degree of materiel maintenance applied to Army equipment. The rebuild operation includes the act of returning to zero those age measurements (hours/miles, etc.) considered in classifying Army equipment/components.

B-3. EXPLANATION OF COLUMNS IN THE MAC, SECTION II.

a. *Column 1, Group Number*. Column 1 lists functional group code numbers, the purpose of which is to identify maintenance significant components, assemblies, subassemblies, and modules with the next higher assembly. End item group number shall be "00."

b. *Column 2, Component/Assembly*. Column 2 contains the names of components, assemblies, subassemblies, and modules for which maintenance is authorized.

c. *Column 3, Maintenance Function*. Column 3 lists the functions to be performed on the item listed in column 2. (For detailed explanation of these functions, see paragraph B-2.)

d. *Column 4, Maintenance Level*. Column 4 specifies, by the listing of a work time figure in the appropriate subcolumn(s), the category of maintenance authorized to perform the function listed in column 3. This figure represents the active time required to perform that maintenance function at the indicated level of maintenance. If the number or complexity of the tasks within the listed maintenance function vary at different maintenance levels, appropriate work time figures will be shown for each level. The work time figure represents the average time required to restore an item (assembly, subassembly, component, module, end item, or system) to a serviceable condition under typical field operating conditions. This time includes preparation time (including any necessary disassembly/assembly time), troubleshooting/fault location time, and quality assurance/quality control time in addition to the time required to perform the specific tasks identified for the maintenance functions authorized in the maintenance allocation chart. The symbol designations for the various maintenance levels are as follows:

C ..... Operator or Crew
O ..... Unit Maintenance
F..... Intermediate-Direct Support Maintenance
H ..... Intermediate-General Support Maintenance
L..... Specialized Repair Activity (SRA)
D ..... Depot Maintenance

e. *Column 5, Tools and Equipment*. Column 5 specifies, by code, those common tool sets (not individual tools) and special tools, TMDE, and support equipment required to perform the designated function.

f. *Column 6, Remarks*. This column shall, when applicable, contain a letter code, in alphabetic order, which shall be keyed to the remarks contained in section IV.

B-4. EXPLANATION OF COLUMNS IN TOOL AND TEST EQUIPMENT REQUIREMENTS, SECTION III.

a. *Column 1*, *Reference Code*. The tool and test equipment reference code correlates with a code used in the MAC, section II, column 5.

b. *Column 2, Maintenance Level*. The lowest level of maintenance authorized to use the tool or test equipment.

c. *Column 3, Nomenclature*. Name or identification of the tool or test equipment.

d. *Column 4, National Stock Number*. The National stock number of the tool or test equipment.

e. *Column 5, Tool Number*. The manufacturer's part number.

B-5. EXPLANATION OF COLUMNS IN REMARKS, SECTION IV.

a. *Column 1, Reference Code*. The code recorded in column 6, section II.

b. *Column 2, Remarks*. This column lists information pertinent to the maintenance function being performed as indicated in the MAC, section II.

Section II. MAINTENANCE ALLOCATION CHART FOR ABC-M11 1-1i/2-QUART DS2 PORTABLE DECONTAMINATING APPARATUS

(1) GROUP NUMBER	(2) COMPONENT ASSEMBLY	(3) MAINTENANCE FUNCTION	(4) MAINTENANCE LEVEL					(5) TOOLS AND EQUIP.	(6) REMARKS
			UNIT		INTERMEDIATE		DEPOT		
			C	O	F	H	D		
00	ABC-M11 DECONTAMINATING APPARATUS	Inspect	0.1	0.1					
		Service	0.2	0.5					A
		Install		0.5				1	
		Replace		0.2				1	B
		Repair		0.2					
01	SPRAY HEAD ASSEMBLY	Inspect	0.1	0.1					
		Service		0.5					
		Repair		0.2				1	B

Section III. TOOL AND TEST EQUIPMENT REQUIREMENTS FOR ABC-M11 1-1/2-QUART DS2 PORTABLE DECONTAMINATING APPARATUS

(1) TOOL OR TEST EQUIPMENT REFERENCE CODE	(2) MAINTENANCE LEVEL	(3) NOMENCLATURE	(4) NATIONAL/NATO STOCK NUMBER	(5) TOOL NUMBER
1	O	Tool Kit, General Mechanic's Automotive	5780-00-177-7033	SC 5180-90-CL-N26

Section IV. REMARKS

REFERENCE CODE	REMARKS
A	Bracket may be straightened and corrosion may be removed by crew.
B	All repair and replacement of parts to be performed by unit maintenance is limited to authorized items listed in this TM.

APPENDIX C

COMPONENTS OF END ITEM AND BASIC ISSUE ITEMS LISTS

Section I. INTRODUCTION

C-1. SCOPE. This appendix lists components of end item and basic issue items for the M11 DECON to help you inventory items required for safe and efficient operation.

C-2. GENERAL. The Components of End Item and Basic Issue Items Lists are divided into the following sections:

a. *Section II. Components of End Item*. This listing is for informational purposes only and is not authority to requisition replacements. These items are part of the end item but are removed and separately packaged for transportation or shipment. As part of the end item, these items must be with the end item whenever it is issued or transferred between property accounts. Illustrations are furnished to assist you in identifying the items.

b. *Section III. Basic Issue Items*. These are the minimum essential items required to place the M11 DECON in operation, to operate it, and to perform emergency repairs. Although shipped separately packaged, BII must be with the M11 DECON during operation and whenever it is transferred between property accounts. The illustrations will assist you with hard-to-identify items. This manual is your authority to request/requisition replacement BII, based on TOE/MTOE authorization of the end item.

C-3. EXPLANATION OF COLUMNS. The following provides an explanation of columns found in the tabular listings:

a. *Column (1)* - Illustration Number (Illus Number). This column indicates the number of the illustration in which the item is shown.

b. *Column (2)* - National Stock Number. Indicates the National stock number assigned to the item and will be used for requisitioning purposes.

c. *Column (3)* - Description. Indicates the Federal item name and, if required, a minimum description to identify and locate the item. The last line for each item indicates the FSCM (in parentheses) followed by the part number.

d. *Column (4)* - Unit of Measure (U/M). Indicates the measure used in performing the actual operational/maintenance function. This measure is expressed by a two-character alphabetical abbreviation (e.g., ea, in., pr).

e. *Column (5)* - Quantity Required (Qty Rqr) . Indicates the quantity of the item authorized to be used with/on the equipment.

Section II. COMPONENTS OF END ITEM

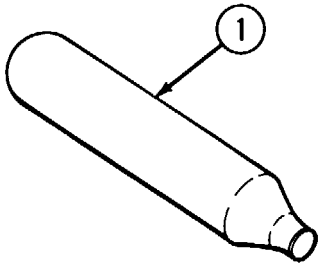

(1) ILLUS NUMBER	(2) NATIONAL STOCK NUMBER	(3) DESCRIPTION USABLE CAGEC AND PART NUMBER	USABLE ON CODE	(4) QTY U/M	(5) REQD
		ON BOARD SPARES			
1	4230-00-775-7541	CYLINDER, NITROGEN (stored in bracket clips) (81349) MILC51098		EA	1

Section III BASIC ISSUE ITEMS

(1) ILLUS NUMBER	(2) NATIONAL STOCK NUMBER	(3) DESCRIPTION USABLE CAGEC AND PART NUMBER	USED ON CODE	(4) U/M	(5) QTY REQD
1		TM 3-4230-204-12&P, Operator's and Unit Maintenance Manual including Repair Parts and Special Tools List for ABC-M11 Decontaminating Apparatus, Portable, DS2, 1-1/2 Quart NSN 4230-00-720-1618		EA	1

APPENDIX D

ADDITIONAL AUTHORIZATION LIST

Not Applicable

APPENDIX E

EXPENDABLE/DURABLE SUPPLIES AND MATERIALS LIST

Section I. INTRODUCTION

E-1. SCOPE.

This appendix lists expendable/durable supplies and materials you will need to operate and maintain the M11 DECON. This listing is for informational purposes only and is not authority to requisition the listed items.

These items are authorized to you by CTA 50-970, Expendable/Durable Items (Except Medical, Class V, Repair Parts, and Heraldic Items), or CTA 8-100, Army Medical Department Expendable/Durable Items.

E-2. EXPLANATION OF COLUMNS.

a. *Column (1)* - Item Number. This number is assigned to the entry in the listing and is referenced in the narrative instructions to identify the material (e.g., "Use general purpose detergent, item 5, app E").

b. *Column (2)* - Level. This column identifies the lowest level of maintenance that requires the listed item.

C - Operator/Crew
O - Unit Maintenance

c. *Column (3)* - National Stock Number. This is the National stock number assigned to the item; use it to request or requisition the item.

d. *Column (4)* - Description. Indicates the Federal item name and, if required, a description to identify the item. The last line for each item indicates the Federal Supply Code for Manufacturer (FSCM) in parentheses followed by the part number.

e. *Column (5)* - Unit of Measure (U/M). Indicates the measure used in performing the actual maintenance function. This measure is expressed by a two-character alphabetical abbreviation (e.g., ea, in., pr). If the unit of measure differs from the unit of issue, requisition the lowest unit of issue that will satisfy your requirements.

Section II. EXPENDABLE/DURABLE SUPPLIES AND MATERIALS LIST

(1) ITEM NUMBER	(2) LEVEL	(3) NATIONAL STOCK NUMBER	(4) DESCRIPTION	(5) U/M
1	C	6850-00-664-1403	ANTIFREEZE (81348) A-A-870	GL
2	C	7920-00-255-7536	BRUSH, CHASSIS AND RUNNING GEAR (81348) H-B-1 81	EA
3	C		DECONTAMINATING AGENT DS-2 (81 349)MILD50030	
		6850-00-753-4827	1 1/3 quart	QT
		6850-00-753-4870	5 gallon	GL
4	C	7930-00-282-9699	DETERGENT, GENERAL PURPOSE (81349) MIL-D-1 6791	GL
5	O	6850-00-274-5421	DRY CLEANING SOLVENT (SD) (81348) P-D-680	GL
6	O	8010-01-122-1969	ENAMEL, YELLOW LUSTERLESS (81348) TT-E-515 1 pt	CN
7	O	8010-01-193-0516	EPOXY PRIMER COATING KIT (81349) MIL-P-53022 1 quart	KT
8	O	8145-00-823-7459	GLOVES, CHEMICAL AND OIL PROTECTIVE (81348) ZZ-G-381	PR

(1) ITEM NUMBER	(2) LEVEL	(3) NATIONAL STOCK NUMBER	(4) DESCRIPTION	(5) U/M
9	C	6850-00-753-4967	INHIBITOR, CORROSION, LIQUID COOLING SYSTEM, POWDER (81348) 0-1-00490 6 ounces	OZ
10	O		INHIBITOR, CORROSION, VAPOR BARRIER (81349) MIL-I-22110	
		6850-00-865-2916	2 ounce powder	CN
		6850-00-368-5233	1 pound can	CN
11	O	8010-01-160-6741	POLYURETHANE COATING (80244) MIL-C-46168 TY2 GREEN 383 1 quart	KT
12	O		RAG, WIPING: (58536) A-A-531	
		7920-00-205-1711	50 lb bale	BE
13	O	6850-00-880-7616	SILICONE COMPOUND (81349) MIL-S-8660	OZ
14			TAPE, PRESSURE SENSITIVE (81348) PPP-T-60	
	C	7510-00-890-9872	60 yards x 1 inch wide	RO
	C	7510-00-266-5016	60 yards x 2 inch wide	RO

APPENDIX F
UNIT MAINTENANCE REPAIR PARTS AND SPECIAL TOOLS LIST

Section I. INTRODUCTION

F-1. SCOPE. This RPSTL lists and authorizes spares and repair parts; special tools; special test, measurement, and diagnostic equipment (TMDE); and other special support equipment required for performance of unit maintenance of the M11 Decontaminating Apparatus. It authorizes the requisitioning, issue, and disposition of spares, repair parts and special tools indicated by the Source, Maintenance and Recoverability (SMR) codes.

F-2. GENERAL. In addition to Section I, Introduction, this Repair Parts and Special Tools List is divided into the following sections:

a. *Section II. Repair Parts List*. A list of spares and repair parts authorized by this RPSTL for use in the performance of maintenance. The list also includes parts which must be removed for replacement of the authorized parts. Parts lists are composed of functional groups in ascending alphanumeric sequence, with the parts in each group listed in ascending figure and item number sequence. See MIL-STD-335, p 24 (C-1). Bulk materials are listed by item name sequence. Repair parts kits are listed separately in their own functional group within section II. Repair parts for repairable special tools are also listed in this section. Items listed are shown on the associated illustration(s)/figure(s).

b. *Section III. Special Tools List*. Not applicable.

c. *Section IV. National Stock Number and Part Number Index*. A list, in National item identification number (NIIN) sequence, of all National stock numbered itemsappearing in the listing, followed by a list in alphanumeric sequence of all part numbers appearing in the listings. National stock numbers and part numbers arecross-referenced to each illustration figure and item number appearance.

F-3. EXPLANATION OF COLUMNS (SECTIONS II AND III).

a. *ITEM NO. (Column (1))*. Indicates the number used to identify items called out in the illustration.

b. *SMR CODE (Column (2)*). The Source, Maintenance, and Recoverability (SMR) code is a 5-position code containing supply/requisitioning information, maintenance level authorization criteria, and disposition instruction, as shown in the following breakout:

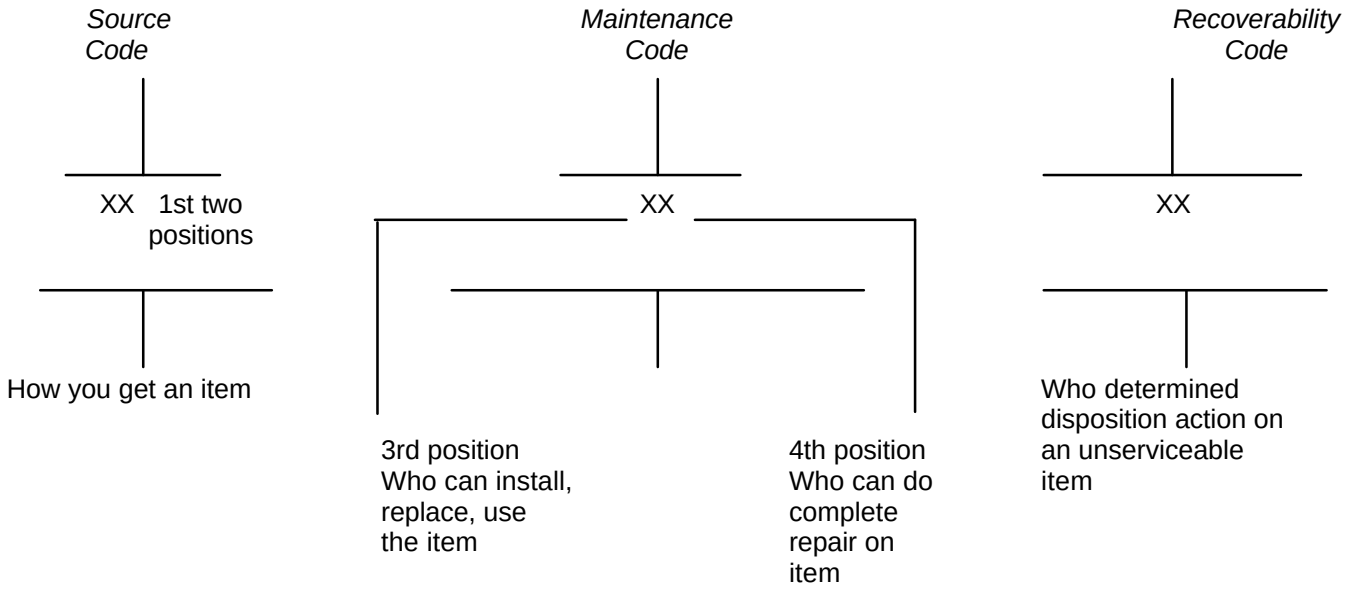

*Complete Repair: Maintenance capacity, capability, and authority to perform all corrective maintenance tasks of the "Repair" function in a use/user environment in order to restore serviceability to a failed item.

(1) Source code. The source code tells you how you get an item needed for maintenance, repair, or overhaul of an end item/equipment. Explanations of source codes follow:

Code	*Explanation*
PA PB PC** PD PE PF PG	Stocked items; use the applicable NSN to request/requisition items with these source codes. They are authorized to the level indicated by the code entered in the 3d position of the SMR code. ****NOTE: Items coded PC are subject to deterioration.** Items with these codes are not to be requested/requisitioned individually. They are part of a kit which is authorized to the maintenance level indicated in the 3d position of the SMR code. The complete kit must be requisitioned and applied.
KB KD KF	

MO - Made at Org/AVUM category
MF - Made at DS/AVIM category
MH - Made at GS category
ML - Made at Specialized Repair Activity (SRA)
MD - Made at Depot

Items with these codes are not to be requested/requisitioned individually. They must be made from bulk material which is identified by the part number in the DESCRIPTION AND USABLE ON CODE (UOC) column and listed in the bulk material group in the repair parts list in this RPSTL. If the item is authorized to you by the 3d position code of the SMR code, but the source code indicates it is made at a higher level, order the item from the higher level of maintenance.

AO - Assembled by Org/AVUM category
AF - Assembled by DS/AVIM category
AH - Assembled by GS category
AL - Assembled by SRA
AD - Assembled by Depot

Items with these codes are not to be requested/requisitioned individually. The parts that make up the assembled item must be requisitioned or fabricated and assembled at the level of maintenance indicated by the source code. If the 3d position code of the SMR code authorizes you to replace the item, but the source code indicates the item is assembled at a higher level, order the item from the higher level of maintenance.

XA - Do not requisition an "XA' -coded item. Order its next higher assembly. (Also, refer to the NOTE below.)

XB - If an "XB" item is not available from salvage, order it using the FSCM and part number given.

XC Installation drawing, diagram, instruction sheet, field service drawing, that is identified by manufacturer's part number.

XD Item is not stocked. Order an "XD" -coded item through normal supply channels using the FSCM and part number given, if no NSN is available.

NOTE

Cannibalization or controlled exchange, when authorized, may be used as a source of supply for items with the above source codes, except for those source coded 'XA."

(2) Maintenance code. Maintenance codes tell you the level(s) of maintenance authorized to USE and REPAIR support items. The maintenance codes are entered in the third and fourth positions of the SMR code as follows:

(a) The maintenance code entered in the third position tells you the lowest maintenance level authorized to remove, replace, and use an item. The maintenance code entered in the third position will indicate authorization to one of the following levels of maintenance:

Code	*Application/Explanation*
C	-Crew or operator maintenance done within unit or aviation unit maintenance.
O	-Unit or aviation unit level can remove, replace, and use the item.
F	-Intermediate direct support or aviation intermediate level can remove, replace, and use the item.
H	-Intermediate general support level can remove, replace, and use the item.
L	-Specialized repair activity can remove, replace, and use the item.
D	-Depot level can remove, replace, and use the item.

(b) The maintenance code entered in the fourth position tells you whether or not the item is to be repaired and identifies the lowest maintenance level with the capability to do complete repair (i.e., perform all authorized repair functions).

NOTE

Some limited repair may be done on the item at a lower level of maintenance, if authorized by the Maintenance Allocation Chart (MAC) and SMR codes.

This position will contain one of the following maintenance codes:

Code	*Application/Explanation*
O	- Unit or aviation unit is the lowest level that can do complete repair of the item.
F	- Intermediate direct support or aviation intermediate is the lowest level that can do complete repair of the item.
H	- Intermediate general support is the lowest level that can do complete repair of the item.
L	- Specialized repair activity (designate the specialized repair activity) is the lowest level that can do complete repair of the item.
D	- Depot is the lowest level that can do complete repair of the item.
Z	- Nonreparable. No repair is authorized.
B	- No repair is authorized. (No parts or special tools are authorized for the maintenance of a "B" coded item.) However, the item may be reconditioned by adjusting, lubricating, etc., at the user level.

(3) Recoverability code. Recoverability codes are assigned to items to indicate the disposition action on unserviceable items. The recoverability code is entered in the fifth position of the SMR code as follows:

Recoverability Codes	*Application/Explanation*
Z	- Nonreparable item. When unserviceable, condemn and dispose of the item at the level of maintenance shown in 3d position of SMR code.
O	- Reparable item. When uneconomically reparable, condemn and dispose of the item at unit or aviation unit level.
F	- Reparable item. When uneconomically reparable, condemn and dispose of the item at the intermediate direct support or aviation intermediate level.
H	- Reparable item. When uneconomically reparable, condemn and dispose of the item at the intermediate general support level.
D	- Reparable item. When beyond lower level repair capability, return to depot. Condemnation and disposal of item not authorized below depot level.
L	- Reparable item. Condemnation and disposal not authorized below specialized repair activity (SRA).
A	- Item requires special handling or condemnation procedures because of specific reasons (e.g., precious metal content, high dollar value, critical material, or hazardous material). Refer to appropriate manuals/directives for specific instructions.

c. *FSCM (Column (3))*. The Federal Supply Code for Manufacturer (FSCM) is a 5-digit numeric code which is used to identify the manufacturer, distributor, or Government agency, etc., that supplies the item.

d. *PART NUMBER (Column (4))*. Indicates the primary number used by the manufacturer (individual, company, firm, corporation, or Government activity), which controls the design and characteristics of the item by means of its engineering drawings, specifications standards, and inspection requirements to identify an item or range of items.

NOTE

When you use an NSN to requisition an item, the item you receive may have a different part number from the part ordered.

e. *DESCRIPTION AND USABLE ON CODE (UOC) (Column (5))*. This column includes the following information:

(1) The Federal item name and, when required, a minimum description to identify the item.

(2) The statement "END OF FIGURE" appears just below the last item description in column 5 for a given figure in both section II and section III.

f. *QTY (Column (6)).* The QTY (quantity per figure column) indicates the quantity of the item used in the breakout shown on the illustration figure, which is prepared for a functional group, subfunctional group, or an assembly. A "V" appearing in this column in lieu of a quantity indicates that the quantity is variable and the quantity may vary from application to application.

F-4. EXPLANATION OF COLUMNS (SECTION IV).

a. *NATIONAL STOCK NUMBER (NSN) INDEX.*

(1) STOCK NUMBER column. This column lists the NSN by National item identification number (NIIN) sequence. The NIIN consists of the last nine digits of the NSN (i.e., $\overbrace{5385\text{-}\underbrace{01\text{-}574\text{-}1476}_{\text{NIIN}}}^{\text{NSN}}$). When using this column to locate an item, ignore the first 4 digits of the NSN. However, the complete NSN should be used when ordering items by stock number.

(2) FIG. column. This column lists the number of the figure where the item is identified/located. The figures are in numerical order in section II and section 111.

(3) ITEM column. The item number identifies the item associated with the figure listed in the adjacent FIG. column. This item is also identified by the NSN listed on the same line.

b. *PART NUMBER INDEX*. Part numbers in this index are listed by part number in ascending alphanumeric sequence (i.e., vertical arrangement of letter and number combination which places the first letter or digit of each group in order A through Z, followed by the numbers 0 through 9 and each following letter or digit in like order).

(1) FSCM column. The Federal Supply Code for Manufacturer (FSCM) is a 5-digit numeric code used to identify the manufacturer, distributor, or Government agency, etc., that supplies the item.

(2) PART NUMBER column. Indicates the primary number used by the manufacturer (individual, firm, corporation, or Government activity), which controls the design and characteristics of the item by means of its engineering drawings, specifications standards, and inspection requirements to identify an item or range of items.

(3) STOCK NUMBER column. This column lists the NSN for the associated part number and manufacturer identified in the PART NUMBER and FSCM columns to the left.

(4) FIG. column. This column lists the number of the figure where the item is identified/located in sections II and III.

(5) ITEM column. The item number is that number assigned to the item as it appears in the figure referenced in the adjacent figure number column.

F-5. SPECIAL INFORMATION. Not applicable.

F-6. HOW TO LOCATE REPAIR PARTS.

a. *When National Stock Number or Part Number is Not Known*:

(1) First. Using the table of contents, determine the assembly group or subassembly group to which the item belongs. This is necessary since figures are prepared for assembly groups and subassembly groups, and listings are divided into the same groups.

(2) Second. Find the figure covering the functional group or subfunctional group to which the item belongs.

(3) Third. Identify the item on the figure and note the item number.

(4) Fourth. Refer to the Repair Parts List for the figure to find the part number for the item number noted on the figure.

(5) Fifth. Refer to the Part Number Index to find the NSN, if assigned.

b. *When National Stock Number or Part Number is Known*:

(1) First. Using the index of National stock numbers and part numbers, find the pertinent National stock number or part number. The NSN index is in National Item Identification Number (NIIN) sequence (see F-4a(1)). The part numbers in the PART NUMBER INDEX are listed in ascending alphanumeric sequence (see F-4b). Both indexes cross-reference you to the illustration figure and item number of the item you are looking for.

(2) Second. After finding the figure and item number, verify that the item is the one you're looking for, then locate the item number in the repair parts list for the figure.

F-7. ABBREVIATIONS. Not applicable.

Section II. REPAIR PARTS LIST

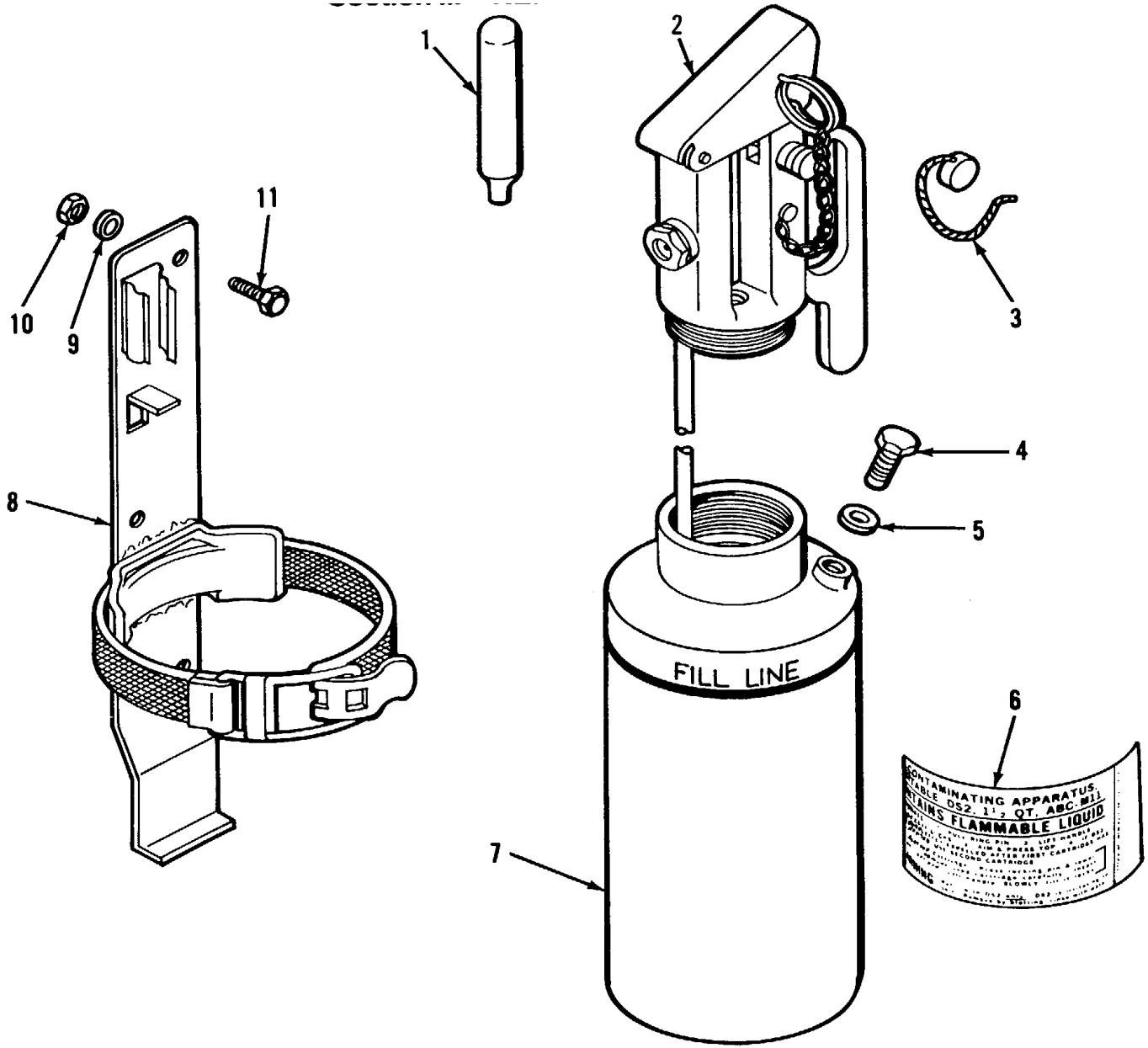

Figure F-1. ABC-M 11 Decontaminating apparatus, portable, DS2, 1-1/2 quart

NATIONAL STOCK NUMBER AND PART NUMBER INDEX

FSCM	PART NUMBER	STOCK NUMBER	FIG.	ITEM
68044	AN4H3A	5306-00-182-2014	F-1	4
B1361	A5-51-273	5330-00-804-7767	F-2	5
B1361	B5-51-270	5330-01-192-9340	F-2	8
B1361	B5-51-280	5315-00-784-6781	F-2	4
B1361	B5-51-290	4230-00-785-7963	F-2	2
B1361	C5-51-300	5360-00-805-2144	F-2	3
B1361	D5-51-286	4230-00-776-4385	F-1	8
B1361	D5-51-302	4230-00-775-8928	F-1	7
B1361	D5-51-310	4730-00-873-1720	F-2	7
B1361	D5-51-314		F-1	2
61361	D5-51-373	9905-01-135-6952	F-1	6
61349	MILC51098	4230-00-775-7541	F-1	1
96906	MS35340-44	5310-00-682-5930	F-1	9
96906	MS51967-2	5310-00-761-6882	F-1	10
96906	MS90725-8	5305-00-225-3839	F-1	11
55921	R437	5310-00-193-9715	F-1	5
25184	131-233-70	5330-00-180-9903	F-2	6
79136	5560-18	5365-00-926-5236	F-2	1
19207	8720150	5340-00-835-9815	F-1	3

ALPHABETICAL INDEX

Subject Page

A

Additional Authorization List D-1
Assembly and Preparation for Use 2-4

C

Common Tools and Equipment 4-1
Component of End Item and Basic Issue Items Lists C-1

D

Description and Use of Operator's Controls and Indicators 2-0
Destruction of Army Materiel to Prevent Enemy Use 1-1

E

Equipment Description 1-2
Expendable/Durable Supplies and Materials List E-0

G

General Information 1-1

L

Lubrication Instructions 3-0

Subject Page

M

Maintenance Allocation Chart B-1
Maintenance Forms, Records, and Reports.....1-1
Maintenance Procedures, Operator.....3-2
Maintenance Procedures, Unit 4-8

N

National Stock Number and Part Number Index.....F-12

O

Operating Instructions on Decals and Instruction Plates 2-10
Operating Instructions.....2-0
Operating Procedures 2-4
Operation In Unusual Weather.....2-11
Operation Under Unusual Conditions 2-11
Operation Under Usual Conditions.....2-4
Operator Preventive Maintenance Checks and Services (PMCS) .2-1

P

Preparation for Storage or Shipment.....1-1, 4-21
Preventive Maintenance Checks and Services (PMCS),
Operator, Unit 2-1, 4-4
Principles of Operation.....1-3

Subject Page

R

References..... A-0
Repair Parts and Special Tools List..... F-1
Repair Parts List..... F-8
Reporting Equipment Improvement Recommendations (EIR)... 1-1

S

Safety, Care and Handling 1-2
Service Upon Receipt 4-1

Subject Page

Special Tools List.....F-12
Special Tools, TMDE, and Support Equipment 4-1
Spray Head Assembly.....4-19

T

Troubleshooting Procedures, Operator.....3-0
Troubleshooting Procedures, Unit 4-6

U

Unit Maintenance Instructions 4-1
Unit Preventive Maintenance Checks and Services (PMCS).....4-4

By Order of the Secretary of the Army:

JOHN A. WICKHAM, JR.
General, United States Army
Chief of Staff

Official:

R. L. DILWORTH
Brigadier General, United States Army
The Adjutant General

Distribution:

To be distributed in accordance with DA Form 12-28, quantity required block 161 and 162, Operator and Organizational Maintenance requirements for Decontaminating Apparatus, Portable.

* U.S. GOVERNMENT PRINTING OFFICE : 1994 0 - 300-421 (00236)

TEAR ALONG PERFORATED LINE

RECOMMENDED CHANGES TO EQUIPMENT TECHNICAL PUBLICATIONS

THEN. . JOT DOWN THE DOPE ABOUT IT ON THIS FORM, CAREFULLY TEAR IT OUT, FOLD IT AND DROP IT IN THE MAIL!

SOMETHING WRONG WITH THIS PUBLICATION?

FROM: (PRINT YOUR UNIT'S COMPLETE ADDRESS)

DATE SENT

PUBLICATION NUMBER	PUBLICATION DATE	PUBLICATION TITLE

BE EXACT. . .PIN-POINT WHERE IT IS

PAGE NO.	PARA-GRAPH	FIGURE NO	TABLE NO.

IN THIS SPACE TELL WHAT IS WRONG AND WHAT SHOULD BE DONE ABOUT IT:

PRINTED NAME, GRADE OR TITLE, AND TELEPHONE NUMBER

SIGN HERE:

DA FORM 1 JUL 79 2028-2

PREVIOUS EDITIONS ARE OBSOLETE.

P.S.—IF YOUR OUTFIT WANTS TO KNOW ABOUT YOUR RECOMMENDATION MAKE A CARBON COPY OF THIS AND GIVE IT TO YOUR HEADQUARTERS.

PIN: 025818-000