TECHNICAL BULLETIN

COLOR, MARKING AND CAMOUFLAGE PATTERNS USED ON MILITARY EQUIPMENT

MANAGED BY USATROSCOM

This copy is a reprint which includes current pages from Changes 1 and 2.

HEADQUARTERS, DEPARTMENT OF THE ARMY

DECEMBER 1975

CHANGE
No. 2

HEADQUARTERS
DEPARTMENT OF THE ARM'Y
WASHINGTON, D.C., 27 June 1980

COLOR, MARKING, AND CAMOUFLAGE PATTERNS

USED ON MILITARY EQUIPMENT

MANAGED BY USATSARCOM

TB 43-0147, 31 December 1975, is changed as follows:

1. Title is changed as shown above.

2. Remove and insert pages as indicated below.

	Remove pages	Insert pages
Chapter 2	2-5 and 2-6	2-5 and 2-6
Chapter 3	3-9 and 3-10	3-9 and 3-10
	3-15 thru 3-18	3-15 thru 3-18
	3-133	3-133 and 3-134

3. New or changed text material is indicated by a vertical bar in the margin. An illustration change is indicated by a miniature pointing hand.

4. Retain this sheet in front of manual for reference purposes.

By Order of the Secretary of the Army:

E. C. MEYER
General, United States Army
Chief of Staff

Official:

J. C. PENNINGTON
Major General, United States Army
The Adjutant General

DISTRIBUTION:
To be distributed in accordance with DA Form 12-34C, TB 43 Series TSARCOM requirements.

CHANGE

No. 1

HEADQUARTERS
DEPARTMENT OF THE ARM'Y
WASHINGTON, D.C., ***15 July 1977***

COLOR, MARKING, AND CAMOUFLAGE PATTERNS

USED ON MILITARY EQUIPMENT

MANAGED BY USATSARCOM

TB 43-0147, 31 December 1975, is changed as follows:

1. Remove old pages and insert new pages as indicated below.

2. New or changed material is indicated by a vertical bar in the margin of the page.

3. Added or revised illustrations are indicated by a vertical bar adjacent to the illustration identification number.

Remove Pages	***Insert Pages***
2-1 and 2-2	2-1 and 2-2
2-5 and 2-6	2-5 and 2-6
3-1 and 3-2	3-1 and 3-2
3-5 and 3-6	3-5 and 3-6
3-9 and 3-10	3-9 and 3-10
3-13 and 3-14	3-13 and 3-14
3-17 and 3-18	3-17 and 3-18
3-33 and 3-34	3-33 and 3-34
A-1	A-1

4. File this change sheet in front of the publication for reference purposes.

By Order of the Secretary of the Army:

BERNARD W. ROGERS
General, United States Army
Chief of Staff

Official:

PAUL T. SMITH
Major General, United States Army
The Adjutant General

Distribution:

To be distributed in accordance with DA Form 12-34A requirements for TB 43-Series: TROSCCM.

TECHNICAL BULLETIN
No. 43-0147

HEADQUARTERS
DEPARTMENT OF THE ARMY
WASHINGTON, D.C., *31 December 1975*

COLOR, MARKING, AND CAMOUFLAGE PATTERNS

USED ON MILITARY EQUIPMENT

MANAGED BY USATSARCOM

			Paragraph	Page
CHAPTER	1	INTRODUCTION		
Section	I.	General		
		Purpose	1-1	1-1
		Scope	1-2	1-1
		Reporting of Errors	1-3	1-1
	II.	Applicability		
		General	1-4	1-1
		Exceptions	1-5	1-1
CHAPTER	2.	COLOR AND MARKING OF NON-CAMOUFLAGE EQUIPMENT		
Section	I.	General		
		Vehicle Weight Classification Data	2-1	2-1
		National Symbol	2-2	2-1
	II.	Special Markings		
		Safety Markings	2-3	2-2
		Technical Markings	2-4	2-2
		Weight Classification	2-5	2-5
		Operation and Destination Plates	2-6	2-12
CHAPTER	3.	COLOR, MARKING, AND PATTERNS OF CAMOUFLAGE EQUIPMENT		
Section	I.	Camouflage Pattern Painting		
		General	3-1	3-1
		Reasons for Pattern Painting	3-2	3-2
		Advantages	3-3	3-3
		Pattern Designs	3-4	3-4
		Preparation for Pattern Painting	3-5	3-5
		Marking the Pattern on the Vehicle	3-6	3-5
		Paints	3-7	3-6
		Paint Mixing	3-8	3-7
		Painting Techniques	3-9	3-7
		Painting Estimates	3-10	3-8
		Maintenance	3-11	3-8
		Training Notes	3-12	3-9
	II.	Patterns		
		General	3-13	3-9
		Policy	3-14	3-10
		Responsibilities	3-15	3-11
		Request for Waiver	3-16	3-11
		Patterns	3-17	3-19
APPENDIX	A.	REFERENCES		A-1
	B.	W'EIGHT CLASSIFICATION DATA		B-1
INDEX				I-1

LIST OF ILLUSTRATIONS

Figure No.	Title	Page
2-1	Fuel tank marking	2-3
2-2	M292 expandable van (calibration)	2-4
2-3	Vehicle weight classification sign installed	2-6
2-4	Sign installed on sloping fender (slope angle less than 30° from vertical)	2-8
2-5	Alteration of bracket	2-9
2-6	Sign installed on splash shield	2-10
2-7	Sign installed on sloping fender (slope angle exceeds 30° from vertical)	2-11
2-8	Unlocking the retaining plate	2-12
3-1	Standard camouflage colors	3-2
3-2	Camouflage pattern painting color charts for geographic and climatic changes	3-4
3-3	Soldier applying a pattern with chalk .	3-6
3-4	Soldiers applying the back area with a 2 inch brush	3-7
3-5	Pattern painting estimates	3-8
3-6	M530C firetruck (sheet 1 of 4)	3-20
3-6	M530C firetruck (sheet 2 of 4)	3-21
3-6	M530C firetruck {sheet 3 of 4}	3-22
3-6	M530C firetruck (sheet 4 of 4)	3-23
3-7	250 CFM compressor (sheet 1 of 4)	3-24
3-7	250 CFM compressor (sheet 2 of 4	3-25
3-7	250 CFM compressor (sheet 3 of 4)	3-26
3-7	250 CFM compressor (sheet 4 of 4)	3-27
3-8	M48A2 AVLB (sheet 1 of 5(	3-28
3-8	M48A2 AVLB (sheet 2 of 5)	3-29
3-8	M48A2 AVLB (sheet 3 of 5)	3-30
3-8	M48A2 AVLB (sheet 4 of 5	3-31
3-8	M48A2 AVILB (sheet 5 of 5)	3-32
3-9	M60 tank. 105MM, hull (sheet 1 of 5)	3-33
3-9	M160 tank. 105MM, hull (sheet 2 of 5)	3-34
3-9	MN60 tank. 105M NM, hull (sheet 3 of 5)	3-35
3-9	N160 tank. 105MM, hull (sheet 4 of 5)	3-36
3-9	M60 tank. 105MM. hull (sheet 5 of 5)	3-37
3-10	2-1 2 T van (IM185 instrument shop) (sheet 1 of 5)	3-38
3-10	2-1 2 T van IM185 instrument shop) (sheet 2 of 5)	3-39
3-10	2-1 2 T van (M185 instrument shop) (sheet 3of 5)	3-40
3-10	2-1 2 T van (M185 instrument shop) (sheet 4 of 5)	3-41
3-10	2-1 2 T van (M185 instrument shop) (sheet 5 of 5)	3-42
3-11	M1128 12T semitrailer (also M127A1C) (sheet 1 of 5)	3-43
3-11	M1128 12T semitrailer (also M127A1C) (sheet 2 of 5)	3-44
3-11	M128 12T semitrailer (also M127A1C) (sheet 3 of 5)	3-45
3-11	M128 12T semitrailer (also M127A1C) (sheet 4 of 5)	3-46
3-11	M128 12T semitrailer (also M127A1C) (sheet 5 of 5}	3-47
3-12	M101A1 3/4T trailer (M105 1-1/2T trailer) (sheet 1 of 5)	3-48
3-12	M101A1 3/4T trailer (M105 1-1/2T trailer) (sheet 2 of 5)	3-49
3-12	M101A1 3/4T trailer (MI105 1-1/2T trailer) (sheet 3 of 5)	3-50
3-12	M101A1 3/4T trailer (M105 1-1/2T trailer) (sheet 4 of 5)	3-51
3-12	M101A1 3/4T trailer (M 105 1-1/2T trailer) (sheet 5 of 5)	3-52
3-13	Mobile assault bridge (MAB) (sheet 1 of 4)	3-53
3-13	Mobile assault bridge (MAB) (sheet 2 of 4)	3-54
3-13	Mobile assault bridge (MAB) (sheet 3 of 4)	3-55
3-13	Mobile assault bridge (MAB) (sheet 4 of 4)	3-56
3-14	Bridge, erection boat and transporter (sheet 1 of 4)	3-57
3-14	Bridge, erection boat and transporter (sheet 2 of 4)	3-58
3-14	Bridge, erection boat and transporter (sheet 3 of 4)	3-59
3-14	Bridge, erection boat and transporter (sheet 4 of 4)	3-60
3-15	Interior bay on transporter (sheet 1 of 4)	3-61
3-15	Interior bay on transporter (sheet 2 of 4)	3-62
3-15	Interior bay on transporter (sheet 3 of 4)	3-63
3-15	Interior bay on transporter (sheet 4 of 4)	3-64
3-16	Ramp bay on transporter (sheet 1 of 4)	3-65
3-16	Ramp bay on transporter (sheet 2 of 4)	3-66
3-16	Ramp bay on transporter (sheet 3 of 4)	3-67
3-16	Ramp bay on transporter (sheet 4 of 4)	3-68
3-17	Transporter (sheet 1 of 4)	3-69

Figure No.	Title	Page
3-17	Transporter (sheet 2 of 4)	3-70
3-17	Transporter (sheet 3 of 4)	3-71
3-17	Transporter (sheet 4 of 4)	3-72
3-18	Transporter with boat launched	3-73
3-19	M353 3-1/2 T trailer PU-495/G (sheet 1 of 3)	3-74
3-19	M353 3-1/2 T trailer PU-495/G (sheet 2 of 3)	3-75
3-19	M353 3-1/2 T trailer PU-495/G (sheet 3 of 3)	3-76
3-20	M200A1 2-1/2T trailer PU-406 A/M (sheet 1 of 3)	3-77
3-20	M200A1 2-1/2T trailer PU-406 A/M (sheet 2 of 3)	3-78
3-20	M200A1 2-1/2T trailer PU-406 A/M (sheet 3 of 3)	3-79
3-21	M200A1 2-1/2T trailer PU-405 /M (sheet 1 of 3)	3-80
3-21	M200A1 2-1/2T trailer PU-405 /M (sheet 2 of 3)	3-81
3-21	M200A1 2-1/2T trailer PU-405 /M (sheet 3 of 3)	3-82
3-22	Demineralizer, ion exchange; 300 GPH shelter (MTD) (sheet 1 of 2)	3-83
3-22	Demineralizer, ion exchange; 300 GPH shelter (MTD) (sheet 2 of 2)	3-84
3-23	Truck, fire, military class 1500 (sheet 1 of 3)	3-85
3-23	Truck, fire, military class 1500 (sheet 2 of 3)	3-86
3-23	Truck, fire, military class 1500 (sheet 3 of 3)	3-87
3-24	Semi-trailer, 15 low bed AN/MJQ-11 (sheet 1 of 3)	3-88
3-24	Semi-trailer. 15 low bed AN/MJQ-11 (sheet 2 of 3)	3-89
3-24	Semi-trailer, 15 low bed AN/MJQ-11 (sheet 3 of 3)	3-90
3-25	Water purification unit: 3000 GPH (van body Mtd((sheet 1 of 3)	3-91
3-25	Water purification unit: 3000 GPH (van body Mtd((sheet 2 of 3)	3-92
3-25	Water purification unit: 3000 GPH (van body Mtd((sheet 3 of 31	3-93
3-26	Water purification unit 600 GPH or lubricating service unit (sheet 1 of 3)	3-94
3-26	Water purification unit 600 GPH or lubricating service unit (sheet 2 of 3)	3-95
3-26	Water purification unit 600 GPH or lubricating service unit (sheet 3 of 3)	3-96
3-27	Bakery oven trailer mounted. M533 (sheet 1 of 2)	3-97
3-27	Bakery oven trailer mounted. M-533 (sheet 2 of 2)	3-98
3-28	Compressor air MIL-C-555 (sheet 1 of 2)	3-99
3-28	Compressor air MIL-C-555 (sheet 2 of 2)	3-100
3-29	Conex container MIL-B-21560, type I (sheet 1 of 2)	3-101
3-29	Conex container MIL-B-21560, type I (sheet 2 of 2)	3-102
3-30	Conex container MIL-B-21560, type II (sheet 1 of 2)	3-103
3-30	Conex container MIL-B-21560, type II (sheet 2 of 2)	3-104
3-31	Container. tricon MIL-B-11886 (sheet 1 of 2	3-105
3-31	Container. tricon MIL-B-11886 (sheet 2 of 2)	3-106
3-32	Cooling tower, liquid, semitrailer (sheet 1 of 3)	3-107
3-32	Cooling tower, liquid, semitrailer (sheet 2 of 3)	3-108
3-32	Cooling tower, liquid, semitrailer (sheet 3 of 3)	3-109
3-33	Dough mixing and makeup outfit trailer mounted, M-534 (sheet 1 of 2)	3-110
3-33	Dough mixing and makeup outfit trailer mounted, M-534 (sheet 2 of 2)	3-111
3-34	Cabinet, dough proofing, insulated portable, 36 pan capacity (sheet 1 of 2)	3-112
3-34	Cabinet. dough proofing, insulated portable. 36 pan capacity (sheet 2 of 2)	3-113
3-35	Dough trough, bakers (for mobile bakery, M-534) (sheet 1 of 2)	3-114
3-35	Dough trough, bakers (for mobile bakery, M-534) (sheet 2 of 2)	3-115
3-36	Tarpaulin, laundry, trailer mounted, single trailer type, M-532 (sheet 1 of 2)	3-117
3-36	Tarpaulin, laundry, trailer mounted, single trailer type, M-532 (sheet 2 of 2)	3-117
3-37	Air supported shelter (sheet 1 of 2)	3-118
3-37	Air supported shelter (sheet 2 of 2)	3-119
3-38	Tank, fabric, collapsible, 10,000 gallon petroleum (sheet 1 of 2)	3-120
3-38	Tank, fabric, collapsible, 10.000 gallon petroleum (sheet 2 of 2)	3-121
3-39	Tank, fabric, collapsible, 50,000 gallon petroleum (sheet 1 of 2)	3-122
3-39	Tank, fabric, collapsible, 50,000 gallon petroleum (sheet 2 of 2)	3-123
3-40	Tank storage, liquid gas, skid mtd, MIL-T-3784 (sheet 1 of 2)	3-124
3 40	Tank storage, liquid gas, skid mtd, MIL-T-3784 (sheet 2 of 2)	3-125
3-41	Fork lift truck 10,000 lb. rough terrain (sheet 1 of 4)	3-126
3-41	Fork lift truck 10,000 lb. rough terrain (sheet 2 of 4)	3-127
3-41	Fork lift truck 10.000 lb. rough terrain (sheet 3 of 4)	3-128
3-41	Fork lift truck 10,000 lb. rough terrain (sheet 4 of 4)	3-129
3-42	Truck, fork lift, coml 15,000 and 50,000 lb. (sheet 1 of 2)	3-130
3-42	Truck, fork lift, coml 15.000 and 50,000 lb. (sheet 2 of 21)	3-131
3-43	Map reproduction unit, trlr, trlr mtd (body van, MIL-B-13207))sheet 1 of 2)	3-132
3-43	Map reproduction unit, trlr, trlr mtd (body van, MIL-B-13207) (sheet 2 of 2)	3-133

LIST OF TABLES

Number	*Title*	*Page*
2-1	Weight Classification Sign Kit	2-6
2-2	Plates Replacement Kit	2-7
3-1	Power Units and Power Plants	3-10
3-2	Vessels	3-11
3-3	Railroad Equipment	3-11
3-4	Vehicles	3-12
3-5	Communications-Electronic Equipment	3-17
3-6	Other Material	3-18
3-7	Bridging Equipment	3-19
3-8	Amphibious Equipment	3-19

CHAPTER 1

INTRODUCTION

Section I. GENERAL

1-1. Purpose. This bulletin establishes policies and assigns responsibilities for the painting and marking of camouflaged and non-camouflaged equipment managed by TROSCOM.

1-2. Scope. *a.* This bulletin prescribes the colors to be used for painting and camouflaging of Army materiel and provides a uniform system for the marking of such materiel.

b. Instructions for application of special technical markings not shown herein are located in Department of the Army publications on the specific end item covered.

c. Instructions for the painting of vehicles and equipment will be found in TM 43-0139, provisions of which are included in this bulletin by reference.

1-3. Reporting of Errors. You can improve this manual by recommending improvements using DA Form 2028 (Recommended Changes to Publications and Blank Forms) and /or DA Form 2028-2 (Test) located in the back of the manual and mail the forms direct to Commander, US Army Troop Support Command, ATTN: AMSTS-MPP, 4300 Goodfellow Blvd., St., Louis, MO 63120. A reply will be furnished direct to you.

Section II. APPLICABILITY

1-4. General. *a.* Markings which are not authorized, are not of the authorized style, or are not in approved locations, in accordance with this bulletin, will be changed or relocated at the time of vehicle repainting, or when the condition of the existing marking becomes unsuitable due to deterioration or damage.

b. Vehicles and equipment will be repainted only when required for materiel preservation purposes and not solely for the purpose of changing colors, unless necessary for safety or security. Vehicles and equipment in storage will be marked in accordance with tables 3-2 through 3-8 when withdrawn from' storage or placed in service.

c. Any new markings applied will conform to the requirements of this bulletin.

d. Markings, in addition to those prescribed or authorized in this bulletin, will be applied only on specific approval of the Department of the Army or as identified in official Department of the Army publications.

e. Markings peculiar to any vehicle, or series of vehicles, will be applied per the instructions in this bulletin. Description, identification, and location of vehicle peculiar markings will be found in the vehicle technical manual.

f. Under tactical conditions, when it becomes necessary to conceal the markings, all such prominent markings may be covered with temporary paint (Paint, temporary, lusterless, gasoline removable MIL-P-13983D) on authority of the responsible commander. Such markings may also be temporarily covered with oil, dirt, mud, or other readily removable substance for camouflage purposes.

1-5. Exceptions. This bulletin applies to all Army materiel that is normally painted except as indicated in a through c below.

a. Special markings for vehicles in administrative use are included in AR 58-1.

b. Marking of clothing and other items assigned to individuals is prescribed in AR 70084.

c. Items fabricated from canvas, leather, and other materials normally not painted will be finished and marked in accordance with applicable Department of the Army technical publications.

CHAPTER 2

COLOR AND MARKING NON-CAMOUFLAGE EQUIPMENT

Section I. GENERAL

2-1. Vehicle Weight Classification Data. Refer to appendix B for TROSCOM equipment weight classification data.

2-2. National Symbol. *a.* The national symbol is a 5-pointed star of lusterless white, Color Chip No. 37875. It will be applied to all tactical and combat vehicles and appropriate equipment in CONUS and oversea. The national symbol will be applied at the depot to vehicles and equipment in storage only when withdrawn for issue to the US Army units. It will not be applied to ambulances or other medical service vehicles affected by international agreement concerning such vehicles.

b. The marking will normally be applied to the front, rear, both sides, and top of the vehicle. The symbol may be applied to mounted equipment on vehicles when such equipment provides the most suitable surfaces. It will not normally be applied to canvas surfaces.

c. The National Symbol marking will be located on the largest regular area and as near as possible to the center of such area. It will not be applied in a location where it will, in normal usage, be obscured by paulins, canvas doors, folded-down windshields, gasoline cans, communications equipment, or other such items.

d. Top surfaces for application of the National Symbol on transport vehicles will be in the following order of preference:

(1) Roof of vehicles with hard roof bodies.

(2) Top of cab on vehicles with hard roof cabs but not having hard roof bodies.

(3) Top of hood when no other suitable hard surface of adequate size is available.

e. On horizontal surfaces the star will be applied with one point directly toward the front of the vehicle or equipment. On vertical surfaces the star will have one point directly up.

f. The star will be applied in either of the two methods of permanent marking, stencil-and-paint or pressure sensitive adhesive vinyl. Vinyl markings will not be used on highly irregular or rough surfaces where adhesion would not be complete. National Symbol markings at different locations on any one vehicle or piece of equipment may be applied in different methods.

g. The National Symbol will be the largest size practical for use in the available space, but will not exceed 36 inches measured between opposite points. The star will not be applied in sizes less than 6 inches between opposite points.

Section II. SPECIAL MARKINGS

2-3. Safety Markings. *a.* Vehicles used for the quantity transportation of gasoline, fuel oil, or other flammable liquids will be marked on both sides and rear with the word "Flammable" in 6 inch letters, and the words "No Smoking Within 50 Feet" in 3 inch letters and numerals. The marking will be placed in two lines, with the word "Flammable" on the top line. The marking will be applied in the same color as the vehicle registration marking.

b. Vehicles carrying explosives or other dangerous materiel will be marked as follows:

(1) When used for the transportation of such dangerous materiel over public highways, vehicles will be marked or equipped with appropriate placards in accordance with AR 55-355.

NOTE

Small arms ammunition in less than case lots are not to be considered as explosives.

(2) When used for the transportation of such dangerous materiel to training areas, vehicles will be marked or equipped with placards on both sides and ends. The words "Explosives" will be marked in white letters not less than 3 inches high on a red background in accordance with AR 385-63. Reflectorized markers should be used when available.

c. When authorized by the responsible

commander, stripes of a contrasting color may be applied to certain vehicles and equipment used in a nontactical area, which, because of size, construction, or function, present a possible hazard. These stripes are applied to permit vehicles to be more readily seen by drivers of other vehicles. They are normally applied to the rear of such vehicles; they may, however, be also applied to the front or certain side surfaces if required.

(**1**) The stripes will be applied across the face of the bumper, or across the width of the vehicle on a flat surface above the bumper in a band not to exceed two feet in height. Other appropriate surfaces may be utilized when necessary.

(**2**) Width of the stripes will be four inches with a four inch space between stripes. They will be inclined at a 450 angle in opposite directions from the centerline of the vehicle, to form an inverted V pattern.

(**3**) Gloss yellow, Color Chip No. 13538, will be used for stripes on vehicles painted olive drab or other dark color.

(**4**) Gloss black, Color Chip No. 17038, will be used for stripes on vehicles painted yellow or other light color.

d. DA Label 76 (A Good Driver) for promoting safe driving practices, may be requisitioned through normal publications supply channels, and will be applied to all motor vehicles as follows: Display in all motor vehicles to be readily visible to the driver.

e. All motorized materials handling equipment will be marked with the legends "No Smoking" and "No Riders".

(**1**) These legends will be placed on a surface facing the operator.

(**2**) The markings will be applied in 1 inch letters of the same color as the registration markings.

(**3**) The markings may be applied horizontally to read left to right or vertically to read top to bottom.

f. Fuel and oil dispensing vehicles and equipment used for servicing aircraft will be marked with the grade of fuel or oil on each side of the tank, Marking will be in the same color as the registration number in the following sizes:

(1) Semitrailers .....6 inches high
(2) Trucks .....4 inches high
(3) 2-wheel trailers.....3 inches high

Examples of such markings follow:

(1) Gasoline (number) grade
(2) Oil (number) grade
(3) Water alcohol

Where available and certified, the capacity of tank compartments in gallons will be marked below and to the right of the manhole covers: "( )" "Gals Cap", in 2-inch letters and numerals.

2-4. Technical Markings. ***a***. *Tire Pressure*. The prescribed vehicle tire pressure will be marked on the dash of all motor vehicles and pneumatic tire equipment. This marking will also be applied to the fenders above each wheel or, if fenders are not used, to the body or frame immediately above each wheel. On towed vehicles or equipment, this marking will be applied to the body or frame immediately above each wheel. On tandem axle vehicles the marking will be centered between the two wheel sets.

(**1**) The markings will consist of the numerals representing the proper pressures, preceded by the letters TP.

(**2**) Letters and numerals will be 1 inch high and in the same color as the registration marking.

b. Maximum Speed. When maximum speed is specified by a manufacturer, or in an applicable technical manual, and when appropriate operation plates are not available, the maximum speed of the vehicle in its highest range and gear ratio will be marked on the dash.

(**1**) The marking will consist of the numerals representing maximum speed, preceded by the abbreviation "Max Speed".

(**2**) Letters and numerals will be 1 inch high and in the same color as the registration markings.

c. Arctic Lubricated. All vehicles and equipment processed with special arctic lubricants and/or other materials for operation in cold climates will be marked with a temporary marking as follows: (1) The words "Arctic Lubricated" will be marked in the following order of preference:

(***a***) Adjacent to the agency identification or registration marking on each side of the vehicle or equipment.

(***b***) Adjacent to the name or identification plate.

(***c)*** On another conspicuous location in order that the markings may be readily seen prior to operation or use. Specific locations may be prescribed in applicable technical publications for the vehicle or equipment.

(**2**) Letters of the marking will be 1 inch high and in the same color as the registration marking.

(**3**) The marking will be kept in a legible condition until the vehicle or equipment is deprocessed, and will then be thoroughly removed.

d. Engine Hood Safety Hook. All tactical use wheeled vehicles which are equipped with an engine hood safety hook will be marked "Warning: Secure Hood in Raised Position with Safety Hook Before Servicing Engine".

(**1**) The marking will be applied at the rear area on the underside of the hood panel.

(**2**) Letters of the marking will be 1 inch high, and black.

e. Excessive Fuel Tank Pressure. This paragraph applies to tactical transport vehicles, and is intended to reduce the possibility of fuel spillage due to fuel tank over filling and subsequent fuel explosion, regardless of fuel type.

(1) If the fuel tank filler cap is a relief valve type, but does not bear a warning decal reading "Pressurized: Open Slowly", the warning "Pressure: Open Slowly" will be marked in 1 inch white letters on the cap or on the fuel tank near the filler pipe.

(**2**) On fuel tanks, where a mark would be readily visible, measure 2 inches down from the top of the tank and mark a 1/4 x 8 inch line, with the following note in 1 inch black letters: "Caution: Do Not Fill Above This Line". (See figure 2-1.)

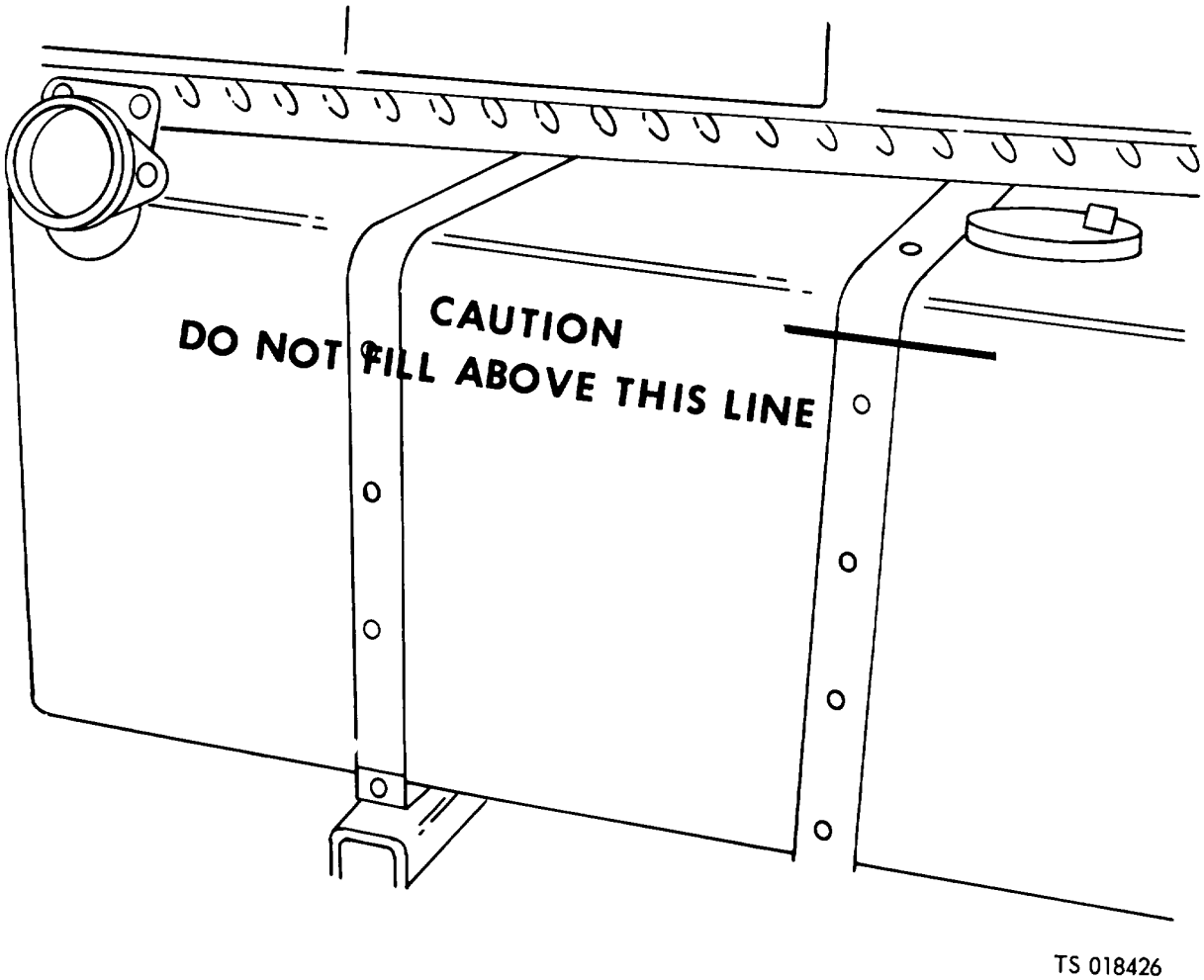

Figure 2-1. Fuel tank marking.

(**3**) On vehicles where a mark on the fuel tank would not be readily visible, mark the following note in 1 inch black letters as near as possible to the filler pipes: "Caution: Do Not Overfill - Allow for Expansion".

f. Calibration Insignia. All calibration vehicles will be marked with a calibration insignia plate as provided in kit ORD 7911573. These plates will be applied on each side of the M292 Expandable Van, between the second and sixth rails (fig. 2-2). On other types of calibration vehicles (such as vans and panel trucks) the plates will be applied to the most appropriate surface, depending on surface size and window location.

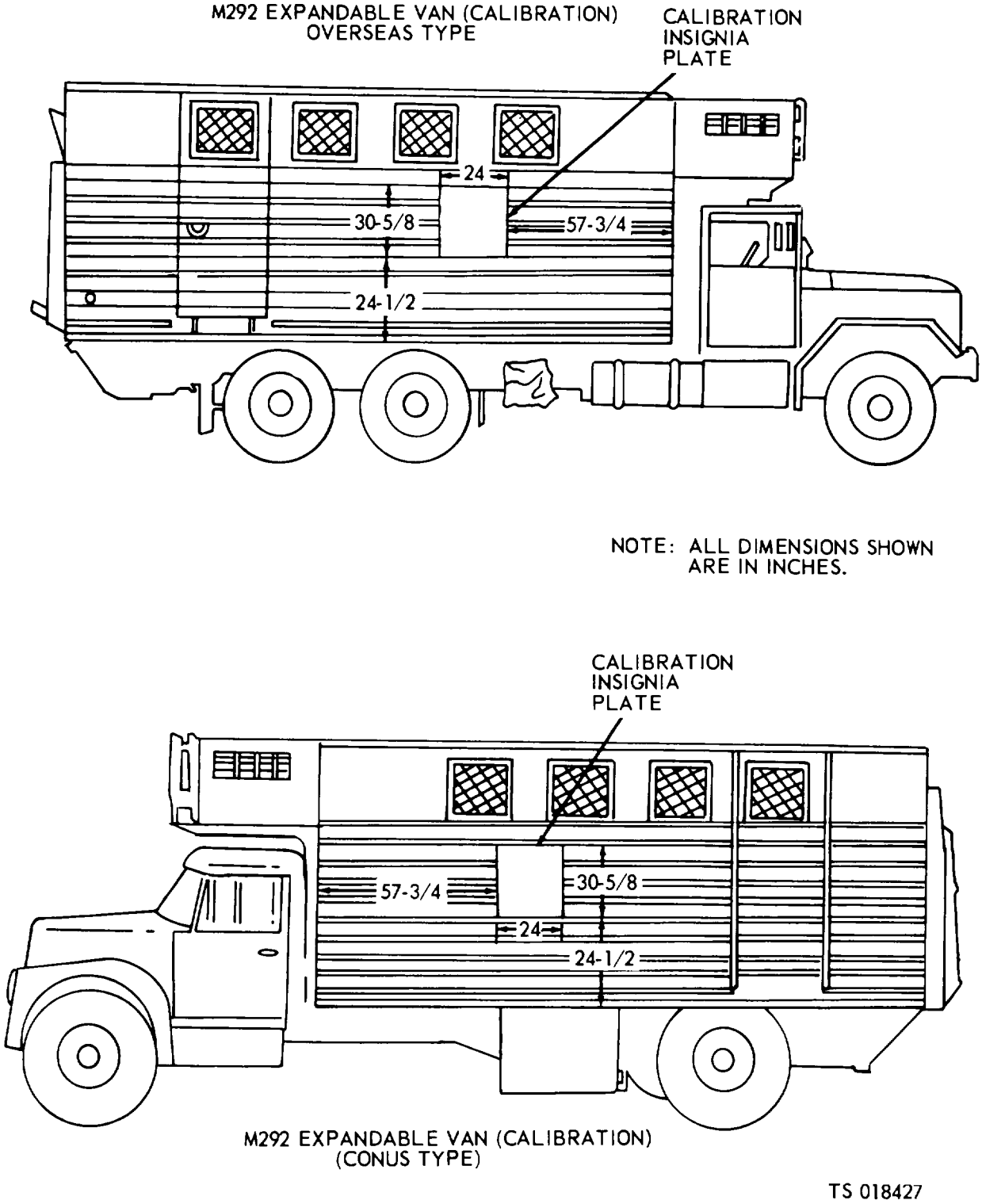

Figure 2-2. M292 expandable van (calibration).

g. Capacity and Weight. All motorized materials handling equipment will have the capacity marked on each side. The marking will consist of the numerals showing the applicable pounds followed by the letters CAP. The actual weight of the equipment will also be marked on each side, in numerals, to show the applicable pounds, followed by the letters, MTWT.

Letters and numerals will be one inch high, in the same color as the registration marking.

h. Other Instructions. Other necessary technical instructions may be marked on appropriate surfaces as required or authorized by the responsible command.

(**1**) Such markings will be applied in letters and numerals normally I inch in height but not less than 1/2 inch.

(**2**) Color of the markings will be white or black, whichever affords the greater contrast with the surface color. If practicable, the color chosen will be the same as the registration marking.

(**3**) Temporary instructions will he applied with removable vinyl markings or gasoline soluble paint.

2-5. Weight Classification. a. All single vehicles with a gross weight of over 3 tons, and all trailers with a rated payload exceeding 1 1/2 tons, are classified for the purpose of' bridge crossing, per FM 5-36. Each single vehicle and vehicle combination has a classification number for empty, cross-country loading, and highway loading. The capacity of a bridge is represented by a military load class number. This number, which is usually posted on the bridge, designates the safe capacity of the bridge and is used in determining whether the vehicle can execute a normal crossing.

b. All applicable self-propelled vehicles not towing other vehicles will carry a circular sign of 9 inch diameter with the vehicle's classification numbers in black on a yellow background. This will normally be located on the front of the vehicle toward the vehicle's right side and below the driver s line of vision.

c. All applicable self-propelled vehicles towing other vehicles will carry a sign similar in size, design, and location except that the classification number of the vehicle combination will be shown with the letter C in red above the number. A 6 inch yellow circle with the basic vehicle classification number in black will be marked on the right side of the vehicle in a conspicuous location. The towed vehicle will be similarly marked with its basic classification number.

d. **When the classification number of the vehicle not subject to change, the marking may be applied directly on a suitable surface. On vehicles painted in gloss colors, the markings will be gloss yellow, Color Chip No. 13538; gloss black, Color Chip No. 17038; and gloss red, Color Chip No. 11136. On vehicles painted in semi-gloss or lusterless colors, the markings will be lusterless yellow, Color Chip No. 33538; gloss black, Color Chip No. 17038 and gloss red, Color Chip No. 11136. When the marking is applied directly to vehicles painted in the same or similar color, the circumference of the circle will be outlined with a black circle 3/4 inch wide. Classification markings on camouflage painted vehicles is as follows:**

(1) On vehicles painted lusterless colors, in accordance with camouflage policy, weight classification numbers 3 inch (7.6 mm) high will be painted in lusterless black directly onto camouflage pattern.

(2) For camouflage purpose, marking may be lusterless black 37038 on lusterless forrest green background.

e. In usages where the classification number may change, a sign kit will be utilized which consists of a 9 inch metal disk, a retaining plate, and two sets of five different numeral plates. By installing the retaining plate, the numeral plates will be locked in place. The sign has black numerals on a yellow background and a red C on one side of the retaining plate (fig. 2-3).

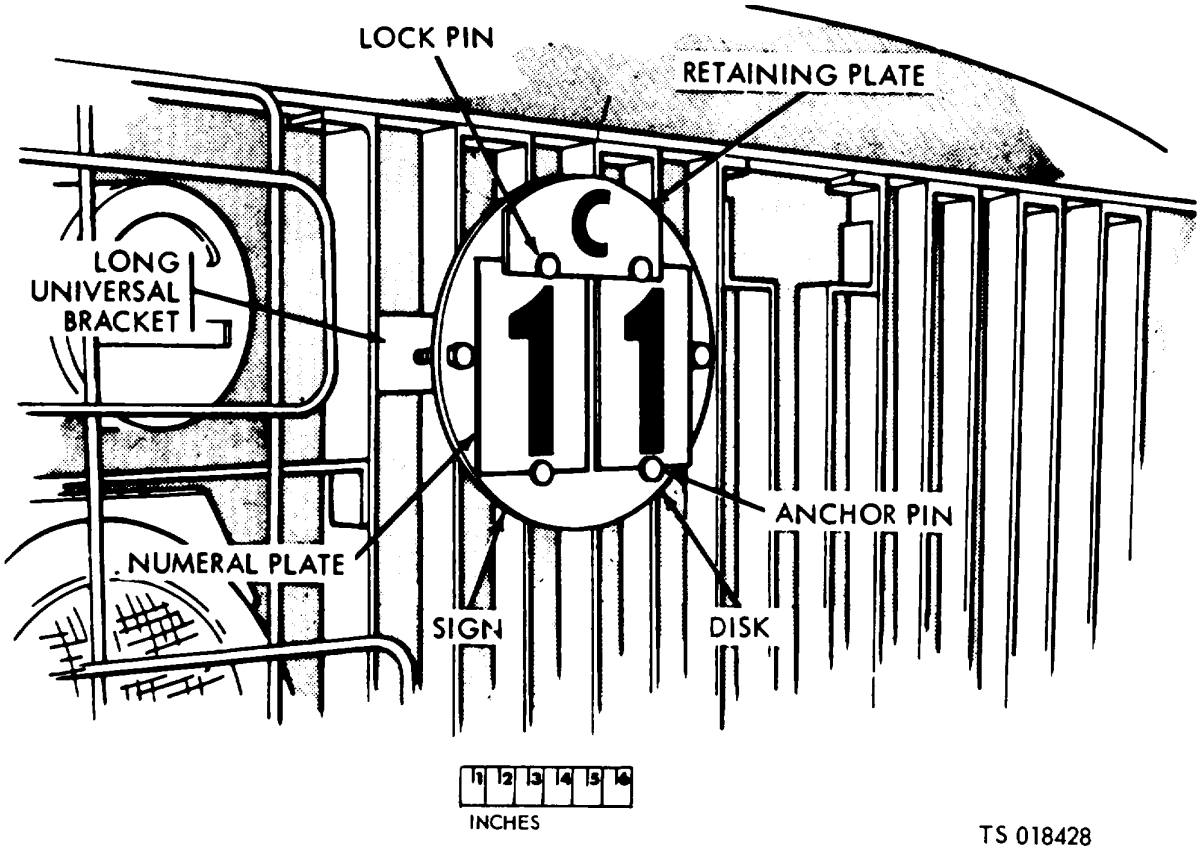

Figure 2-3. Vehicle weight classification sign installed.

f. The following weight classification sign kit is being supplied initially with mounting brackets and hardware. Refer to table 2-1.

Table 2-1. Weight Classification Sign Kit

Name	Part No.	National stock No.	Qty
KIT: vehicle class sign, w/brackets and hardware		9905-00-565-6267	1
Consisting of:			
6 ea BOLT, MACHINE: hex-hd, S, cd- or zn- pltd, 5/16-24UNF-2A x 3/4*	120741	5306-00-012-0741	
2 ea BOLT, MACHINE: hex-hd, low-carb-S, cd- or zn-pltd, 3/16-24UNF-2A x 1 3/4*	123798	5306-00-012-3798	
1 ea BRACKET: unit, 1g**			
1 ea BRACKET: unit, short**			
1 ea DISK: vehicle class sign. 9-in.			
6 ea NUT, PLAIN, HEXAGON: S, cd- or zn-chro-mate-fin., 5/16-24 UNF-2B, 1/2 w, 17/64 thk*	120368	5310-00-012-0368	
2 ea PLATE: numeral, 0 one side, 1 other side			
2 ea PLATE: numeral, 2 one side, 3 other side			
2 ea PLATE: numeral, 4 one side, 5 other side			
2 ea PLATE: numeral, 6 one side, 7 other side			
2 ea PLATE: numeral, 8 one side, 9 other side			
1 ea PLATE: retaining, C on one side			
6 ea WASHER, LOCK: int-teeth, S, cd- or zn-pltd, 5/16 in. Screw size.	138538	5310-00-013-8538	

* Hardware items not required for the specific installation procedure will be returned to local stock.

* * Brackets not required for the specific installation procedure will be scrapped.

g. In addition, a replacement kit, itemized below, is authorized for the replacement of lost or damaged numeral plates and retaining plates. (Refer to table 2-2.)

Table 2-2. Plates Replacement Kit

Name	National sock No
KIT: retaining and numeral plate replacement, for vehicle class signs.....	9905-00-565-6268
Consisting of:	
1 ea PLATE: numeral. 0 one side, 1 other side.	
1 ea PLATE: numeral. 2 one side, 3 other side.	
1 ea PLATE: numeral. 4 one side, 5 other side.	
1 ea PLATE: numeral. 6 one side, 7 other side.	
1 ea PLATE: numeral. 8 one side, 9 other side.	
1 ea PLATE: retaining, C on one side.	

h. A vehicle weight classification sign kit, as described herein, will be installed on the front of each vehicle except: (1) All trailers.

(2) Vehicles having a gross weight of 3 tons or less.

(3) Vehicles having standard classification numbers higher than 99.

(4) Vehicles having rated payloads of 3/4 to 1 1/2 tons. This exception does not apply to vehicles authorized for towing loads.

(5) Vehicles with fixed loads (such as tanks, self-propelled guns, etc).

i. Front classification signs for vehicles included in h (3), (4), and (5) above will be painted directly on the vehicle. Side classification signs, where applicable, will also be painted directly on the vehicle.

j. These vehicle weight classification sign kits can be installed on vehicles in different ways. For example, in the case of Cargo Truck, M211, the sign can be installed on the brush guard, on the splash shield, or in an upright position on the fender. The choice of method is left to the using organization.

(1) *Location.*

(a) The classification sign will be installed on the vehicle in one of the following locations:

1. Right front fender.

2. Right side of brush guard.

3. Right front section of hull.

4. Right side of center front bumper splash shield.

(b) The sign will be placed below the driver's line of vision and will be positioned so that it will not block headlamps, marker lights, blackout lights, air intakes, etc.

(2) *Installation.*

(a) On brush guard.

1. Paint the long universal bracket (channel) with rust-inhibiting enamel.

2. After the enamel has dried, position the bracket so that the two holes in the bracket aline with two bolt holes (9 o'clock and 3 o'clock positions) in the sign. Assure that the flat bearing surface of the bracket faces toward the sign. Install one bolt (1-3/4 inches long) 123798, one washer 138538, and one nut 120368. Turn nut two or three turns.

4. With the bracket in a vertical position, insert it between two bars of the brush guard at the desired location. With one hand, reach behind the brush guard and adjust the bracket to a horizontal position. With the other hand, install another bolt (1-3/4 inches long), washer, and nut. Tighten both bolts, but apply only enough torque to secure the sign to brush guard. Excessive torque will cause the sign disk to bend. Figure 2-3 shows the sign installed on brush guard.

CAUTION

If it is found that the vehicle classification sign seriously obstructs air flow to the radiator, as indicated by engine overheating, remove sign from brush guard and install sign elsewhere.

(b) *On sloping fender.* Install the sign as indicated in *1* and *2* below only when the slope of the fender is less than 30 ° from vertical. When the slope of the fender is more than 30 ° from vertical, install the sign in a vertical position, as outlined in (c) below, to insure readability of the sign.

1. Position the sign in the desired location on the fender and, using the sign as a template, drill two 11/32-inch holes in fender to aline with bolt holes in the sign at the 9 o'clock and 3 o'clock positions.

2. Install the sign to the fender with two bolts 120741 (3/4 in. long), two washers 138538, and two nuts 120368. Tighten bolts securely (fig. 2-4).

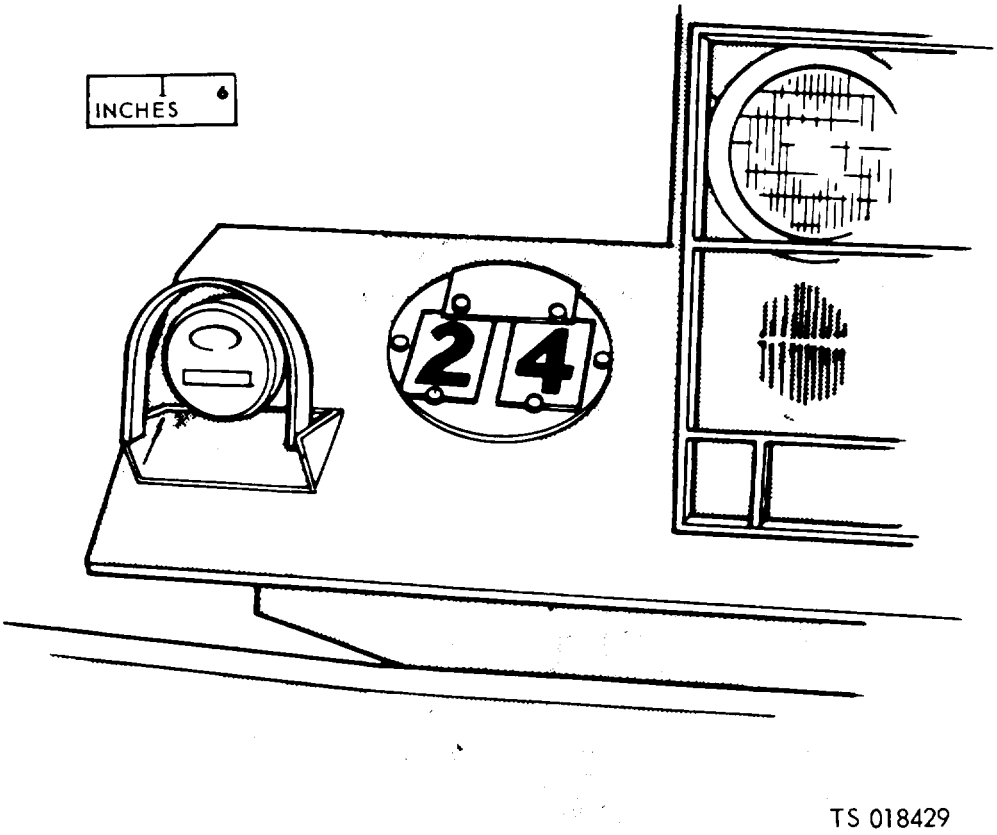

Figure 2-4. Sign installed on sloping fender (slope angle less than 30° from vertical).

(c) *In a vertical position on fender or on splash shield.*

1. Alter the long universal bracket (channel) in accordance with figure 2-5.

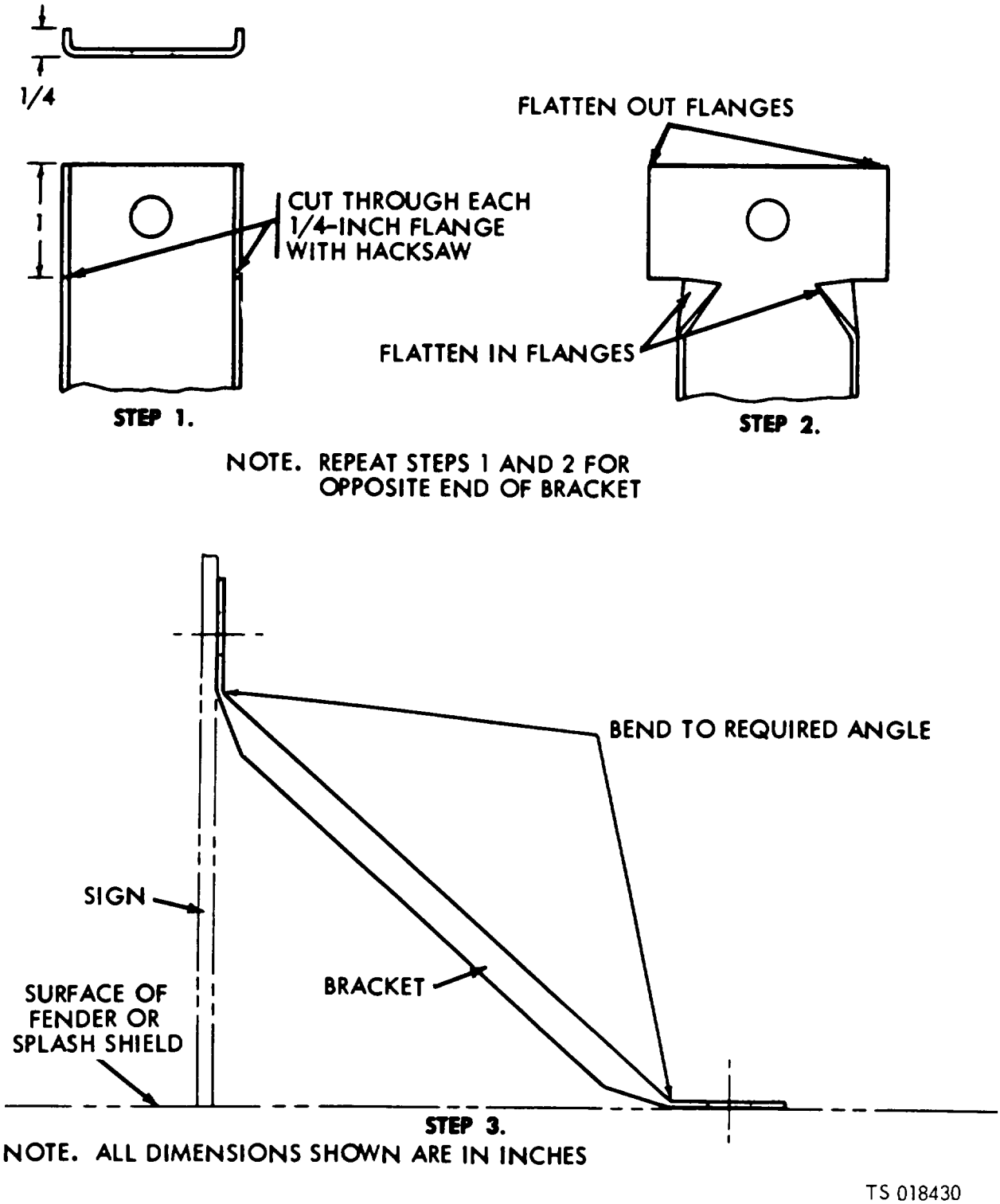

Figure 2-5. Alteration of bracket.

2. Paint both the altered bracket and the short universal bracket (angle) with rust-inhibiting enamel.

3. After the enamel has dried, position the long leg of the short bracket on the back of the sign and aline two holes in bracket with the two lower bolt holes in the sign.

NOTE

When installing the sign on a horizontal surface, position the short leg of the bracket so that it faces rearward (fig. 2-6).

When installing the sign on a sloping surface, position the short leg of bracket so that it faces forward (fig. 2-7).

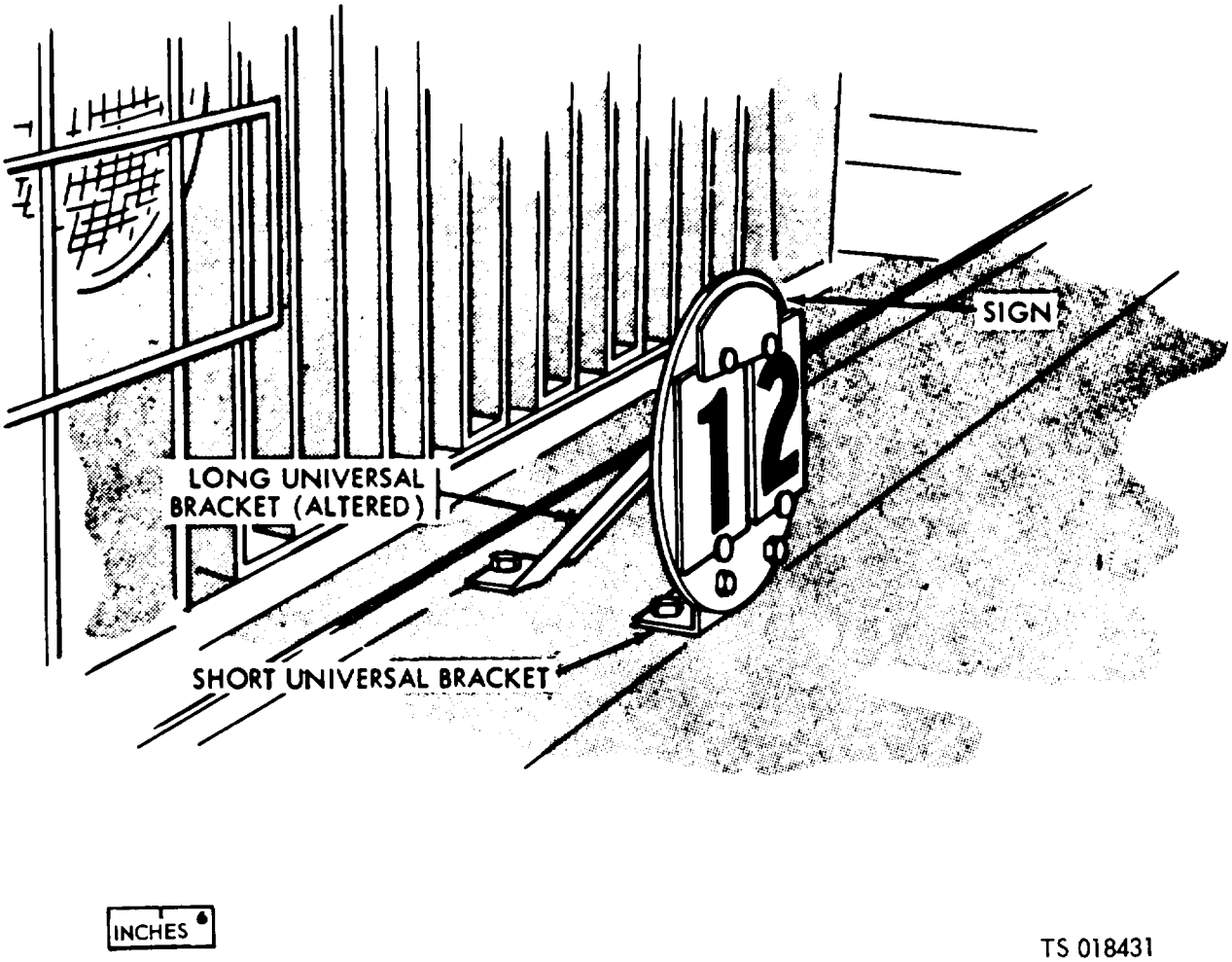

Figure 2-6. Sign installed on splash shield.

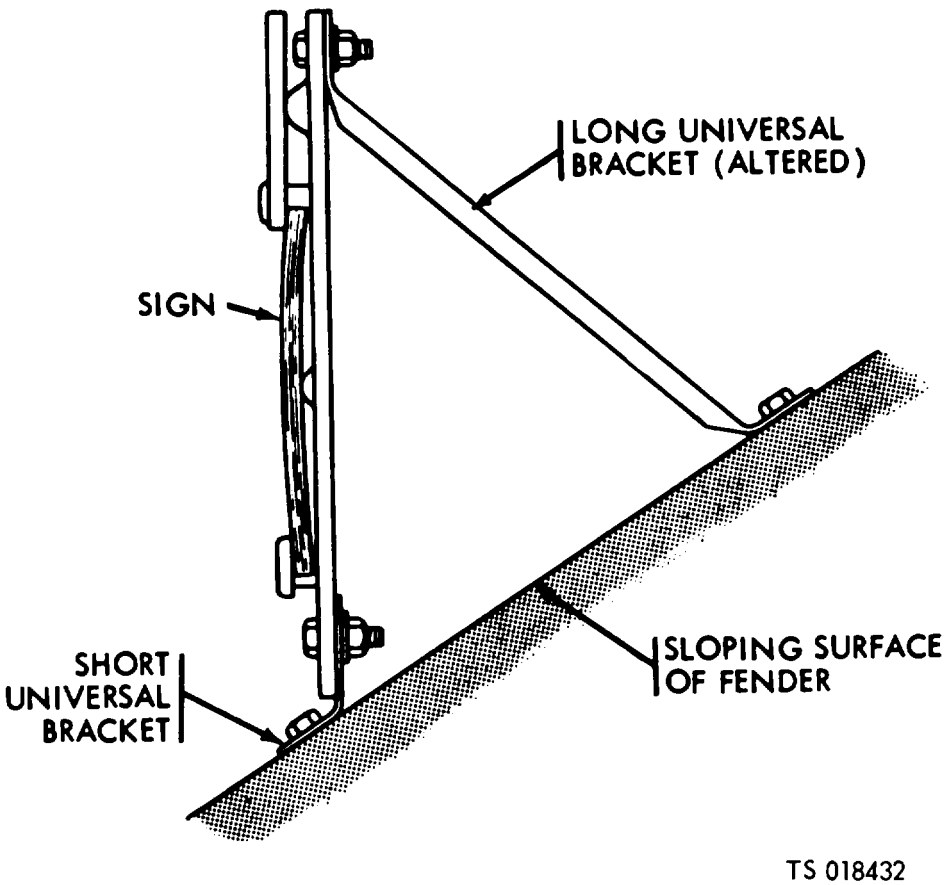

Figure 2-7. Sign installed on sloping fender (slope angle exceeds 30° from vertical).

4. Install bracket to sign with two bolts 120741 (3/4 in. lg), two washers 138538, and two nuts 120368.

5. Position the sign in the desired location on the fender or splash shield. Bend short leg of bracket, as required, to conform to the contour or slope of fender.

6. Using the short leg of the bracket as a template, drill two 11/32-inch holes in fender or splash shield.

7. Attach the sign to the fender or splash shield with two bolts (3/4 in. long), two washers and two nuts.

8. Secure the altered long universal bracket to the sign with one bolt (3/4 in. long), one washer, and one nut. (Insert bolt in hole located between two stacks of numeral plates on sign).

9. Drill an 11/32-inch hole in fender or splash shield to correspond with the hole in the altered bracket and secure the bracket with one bolt (3/4 inch long), one washer, and one nut. Figure 2-6 shows sign installed on splash shield. Figure 2-7 shows sign installed on sloping fender.

k. Instructions for unlocking and locking the retaining plate is as follows:

(1) *Unlocking retaining plate.* With the thumb of one hand, press down firmly on one stack of numeral plates (fig. 2-8). With the other hand, press down gently on the retaining plate and pivot the plate away from the lock pin. To remove retaining plate completely, press down firmly on the remaining stack of numeral plates and free retaining plate from the other lock pin.

Figure 2-8. Unlocking the retaining plate.

(2) *Locking retaining plate.* Assure that five numeral plates are stacked on each anchor pin with the two top plates showing the desired classification number. If the vehicle is to be used in combination, position the retaining plate so that the red C on one side of the plate will be visible. If the vehicle is to be used singly, position the retaining plate so that the red C will not be visible. Press down firmly on the top of one stack of numeral plates and slide the retaining plate onto the lock pin until the plate snaps in place. Repeat the procedure for the remaining stack of plates and lock the retaining plate to the remaining lock pin.

l. See appendix B for vehicle weight classification data. For vehicles not listed, or for which no similar vehicle is listed, refer to TM 5312, only in the event that no qualified engineer is available.

2-6. Operation and Designation Plates. *a.* These plates, as provided on vehicles and equipment, will be kept clear and free from paint at all times.

b. Operation plates contain data or instructions on vehicle operation and will be installed within the normal view of the operator when in an operating position. The plates will include:

(1) *Road speed plates.* To prescribe the maximum permissible speed for operation in each gear ratio and range.

(2) *Shift diagram plates.* Two show the location of each position of the transmission, transfer, and/or power take-off.

c. Operation plates containing precautionary instructions to avoid personnel injury or equipment damage will have a red background. This applies to new plates of photosensitive anodized aluminum, conforming to type H, MILSPEC 15024. Existing plates will be replaced only when no longer serviceable.

d. Designation plates contain data pertinent to the vehicle or equipment, but are not required for actual operation. They will be located in convenient position without creating confusion with operation plates. The plates will include:

(1) *Name or identification plates.* To show nomenclature, manufacturer, model, serial number, stock number, contract number, date of delivery to the Government.

(2) *Data plates*. To show empty weight, maximum payload, and/or gross weight, weight on each axle, and/or maximum towed load for highway and cross-country; center of gravity empty and loaded, shipping cubage, overall and reducible dimensions, and other pertinent linear and angular dimensions.

(3) *Servicing data plates*. To show fuel capacity and minimum octane, cooling system capacity, draining instructions, tire pressures for terrain conditions, lubricant data for different temperature ranges, and other servicing data for the vehicle, components or equipment installed.

(4) *Responsible agency plates*. To show the Commodity Command or agency responsible for the procurement and/or maintenance of the vehicle or its chassis, body, and/or equipment.

(5) *Publication plates*. To show the manuals (operator's, maintenance, and supply) and lubrication order applicable to the vehicle.

e. Designation plates may be combined plates when space conditions warrant.

CHAPTER 3

COLOR, MARKING AND PATTERNS OF CAMOUFLAGE EQUIPMENT

Section I. CAMOUFLAGE PATTERN PAINTING

3-1. General *a.* This section describes an improved method of camouflaging military equipment and how to apply it to existing equipment. This improved method is simple, and field tests have proved that it works well in confusing the enemy observer and enhancing battlefield survivability. It consists of painting newly developed patterns on the equipment, using only four colors. The patterns (different for each model of vehicle or item of equipment) have been carefully worked out by a team of camouflage experts and scientists. Unlike older camouflage patterns, this is a general all-purpose pattern. By changing only one of the four colors, or at the most, two, the same basic pattern can be made to work equally well in different seasons of the year or on different types of terrain.

b. This section describes the new patterns and where they can be obtained, what colors and kinds of paint are to be used for various conditions, and how the patterns are to be painted on the equipment. It also shows a sample pattern and how a few common items of equipment look when they have been pattern painted.

c. This section does not give basic information on paint application; if needed, this should be obtained from TM 43-0139, Painting for Field Use. Basic information on camouflage can be found in TM 5-200, Camouflage Materials.

d. The instructions in this section apply only to the first pattern painting of existing solid-color vehicles and related equipment. These will be painted with the color combination appropriate to the season or terrain in the operational area of the equipment. Repainting of patterns in different colors to adapt them to different seasons or types of terrain will be up to the appropriate commander.

3-2. Reason for Pattern Painting. *a.* All military vehicles and equipment have characteristic shapes and interior shadows. These so-called signatures contrast with natural surroundings and make the object conspicuous. Pattern painting does much to break up the signature characteristics by using lusterless paint to reduce the glare of headlights, color to reduce contrasts with the soil and vegetation, and pattern shape, size, and placement to distort the vehicle's form. The paint also reflects near infrared radiation. The patterns, designed for each type of vehicle, have color areas that cut off corners; avoid straight, vertical, and horizontal lines; and extend internal shadows in shapes similar to natural features and vegetation.

b. Pattern painting is not a magic, cure-all camouflage technique. However, it makes the item much harder to see and to recognize as a military object. It also provides an excellent base for further, more complete camouflage. If properly sited, the pattern-painted vehicle will need much less work to camouflage than a solid colored vehicle.

c. The theory behind this new pattern-painting design is to provide a system that can be adapted to various geographical and seasonal changes by the changing of one or, at most, two colors. For instance, the forest green can be changed to sand for desert operations, or the field drab changed to dark green and the sand to field drab for temperate climate terrain in summer. By using the appropriate color from the standard camouflage color chart (figure 3-1) in conjunction with the pattern-painting design, a good color combination for almost every terrain can be obtained.

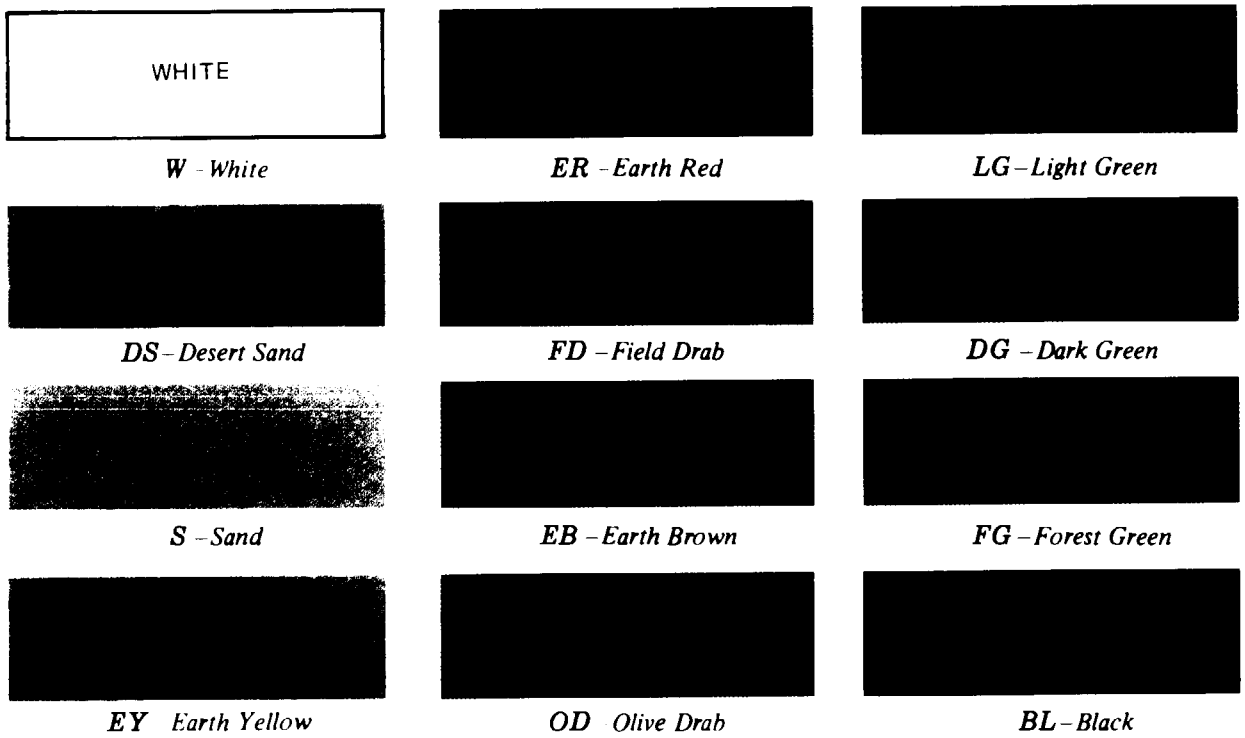

Figure 3-1. Standard camouflage colors.

d. These new designs also lend themselves to touchup painting with better results than are now obtainable from touchup of the current OD vehicles. Slight mismatches in color will not be as noticeable as they are on a solid-colored vehicle except from very close inspection. Likewise, minor abrasions and scaling of surfaces will be equally inconspicuous.

3-3. Advantages. *a*. The new system of pattern painting has the following major advantages:

(1) Provides ground and air observation in the target acquisition role.

(2) Can be applied by troops with minimum training, effort and equipment.

(3) Has effectiveness under combat conditions, but also presents a good military appearance in garrison.

(4) Uses colors from the standard camouflage chart (fig. 3-1) and thus avoids color mixing or tinting in the field to obtain the specified color. TB 43-0147

(5) Uses standard camouflage paints identifiable by National stock number (NSN) or Military Specification Number.

(6) Combines effectively with other camouflage techniques such as use of natural foliage.

(7) Permits the changing of one or two colors to adapt it to seasonal and geographic changes (and avoids the need to completely repaint the vehicle for such changes).

(8) Permits easy retouching of the paint without causing mottling or color mismatches.

(9) Does not demand precise execution of the line and shape of the individual patterns; their border lines can vary as much as 2 inches from the standard pattern without causing loss of effectiveness.

b. The camouflage pattern consists of wavy irregular patches of color applied to the vehicle.

The colors used for the patterns have been selected from the standard camouflage colors as shown in figure 3-1. The standard colors are:

Abbreviation	*Color*
W	White
DS	Desert sand
S	Sand
EY	Earth yellow
ER	Earth red
FD	Field drab
EB	Earth brown
OD	Olive drab
LG	Light green
DG	Dark green
FG	Forest green
BL,	Black

c. The patterns use only four of these colors, for any geographic or climatic conditions. The only exception-winter arctic, which is solid white. When changing from one geographic or climatic condition to another, the shape of the pattern itself does not change; only one or two of the colors that make up the pattern change. Figure 3-2 shows the combinations of colors to be used for various seasons and climatic regions. The first and second colors each cover about 45 per cent of the vehicle; the third color covers 5 per cent of the vehicle; the fourth color, normally black, covers the remaining 5 per cent. The location numbers 1, 2, and 3 identify the first three colors, and are used in the pattern designs to show what color goes where on the vehicle.

CONDITION	COLOR DISTRIBUTION			
	45%	45%	5%	5%
	COLOR NUMBER			
	1	2	3	
Winter US & Europe - verdant[1]	FG	FD	S[3]	BL
Snow - temperate w/trees & shrubs[2]	FG	W	S[3]	BL
Snow - temperate w/open terrain[2]	W	FD	S[3]	BL
Summer US & Europe - verdant[1]	FG	LG	S[3]	BL
Tropics - verdant	FG	DG	LG[3]	BL
Gray desert	S	FD	EY[3]	BL
Red desert	ER	EY	S[3]	BL
Winter Arctic	W	W	W	W

NOTES:

[1]VERDANT MEANS GENERALLY GREEN-IN SUMMER DUE TO TREES, SHRUBS, AND GRASS: IN WINTER DUE TO EVERGREENS.

[2]THIS COLOR COMBINATION IS FOR USE ONLY IN AREAS THAT OCCASIONALLY HAVE SNOW WHICH DOES NOT COMPLETELY COVER THE TERRAIN, THUS LEAVING TREES OR PATCHES OF SOIL BARE.

[3]THIS 5% COLOR SHOULD BE THE CAMOUFLAGE COLOR THAT MATCHES MOST CLOSELY THE COLOR OF THE SOIL IN THE LOCAL AREA. A TYPICAL COLOR FOR SUCH USE IS SAND, BUT EARTH RED, EARTH YELLOW, OR ONE OF THE OTHERS MAY BE CLOSER TO THE PREDOMINANT SOIL COLOR AND IN THAT CASE, SHOULD BE USED.

Figure 3-2. Camouflage pattern painting color chart for geographic and climatic changes.

NOTE

Since the areas and climates in which newly manufactured vehicles will operate cannot be predicted, it is not practical to pattern paint new vehicles at the factory.

d. The color patterns in figure 3-2 were designed for world-wide application, and cover a wide range of terrain conditions. It is possible that any given color combination may not be an exact match for some specific local condition. In such a case, the 12 colors available in camouflage paints give the local commander wide latitude to modify the color combination and develop one that more closely matches the local terrain and operating conditions.

NOTE

Individual colors should not be mixed with one another.

3-4. Pattern Designs. *a.* The patterns, when painted on the vehicles, are a guide for a design developed for the specific item of equipment. The design is an outline drawing of the item on which wavy lines give the boundaries of the color areas. Within each such area is a number that stands for the color to be used in that area, except that areas which are to be black are shown as solid black. As can be seen in figure 3-2, the color represented by the number varies according to the seasonal or terrain color combination being used. An

individual design drawing is given for each of five views of the vehicle: front, back, left side, top, and right side.

b. Pattern designs (or viewgraph projector transparencies) are to be obtained from the appropriate Training Aids Service Office (TASO). This may be located at the installation, or it may be the regional TASO responsible for furnishing training aids support within the area where installation is located. If pattern designs are not maintained by the local TASO write to Commander. US Army Troop Support Command, ATTN: DRSTS-MFT, to obtain assistance.

3-5. Preparation for Pattern Painting. *a*. The first step in pattern painting a vehicle is to clean thoroughly the surfaces to be painted. A clean vehicle is a must. Applying paint to anything less than a totally clean surface will result in rapid peeling, cracking, and scaling of the new coating.

b. The vehicle must be cleaned with detergent or with solvent and rinsed thoroughly or steam cleaned to insure a totally clean surface suitable for a durable coating. Grease, oil, dirt, plastic letters and stars, all loose and scaling paint, and paint other than the original enamel (such as latex paints, etc., which may have been used to retouch as an expedient) must be removed.

c. Sanding of rough areas to remove the oxidized surface from the old paint will also make the new paint job look better and last longer. If bare metal is exposed following sanding and cleaning, a primer shall be applied to the bare metal before the camouflage alkyd enamel is applied. The primer should be allowed to dry hard before the enamel is applied. The specification number for the primer is TT-P1757, NSN is 8010-00-515-2208 for a 1 gallon container and 8010-00-515-2111 for a 5-gallon container.

d. The following items are needed for pattern painting:

(**1**) Vehicle or other item of equipment.

(**2**) Pattern-painting design for the specific vehicle or other item of equipment.

(**3**) Spray guns.

(**4**) Paint (camouflage alkyd enamel).

(**5**) Thinners (xylene, mineral spirits, butyl cellosolve, and cellulose nitrate).

(**6**) Mixing buckets.

(**7**) Paint brushes. 1/2-inch, 1-inch, and 3-inch.

(**8**) Paddles or sticks to mix paint.

(**9**) Painters' masks.

(**10**) Masking tape for masking small items.

(**11**) Brown (kraft) paper for masking windshield, etc.

(**12**) Detergent to clean vehicles.

(**13**) Chalk for marking paint areas.

(**14**) Steel wool or sandpaper.

(**15**) Rags.

(**16**) Compressed air source.

(**17**) Water separators and fittings with pressure gage.

(18) Wrenches for spray guns.

e. All glass, grease fittings, and items which can be damaged by paint must be masked with masking tape and/or paper.

NOTE

Grease should not be used for masking because it can easily. be smeared onto other parts of the vehicle and prevent the paint from sticking to the smeared surface.

f. All white vehicle markings must be removed from the vehicle. This includes the stars, unit identification, instruction signs, and administrative markings. When the vehicle is pattern painted only the following markings are applied.

(**1**) ***Unit identification***. Type and location remain the same. Color is changed to lusterless camouflage black.

(**2**) ***National symbol (star)***. All stars will be removed and replaced by a 3-inch black lusterless star front and rear. Placement should be centered on vehicle, on line with unit ID markings. On the rear of wheeled vehicles, star may be placed on tailgate.

(**3**) ***Agency and registration number***. Both US Army and registration number will be removed from vehicle exterior. Registration number may be placed on a data plate or other suitable interior location.

(**4**) ***Safety and instructional markings***. Markings such as tire pressure and fuel type and fill level may be retained in lusterless black letters no larger than 1-inch. Markings directly related to troop safety, such as wrecker boom capacity and danger zones, must be evaluated by safety personnel.

3-6. Marking the Pattern on the Vehicle. After the vehicle has been prepared, it is ready for pattern application. Use only the printed pattern design (or viewgraph projector transparency) obtained from the TASO for the vehicle. This pattern is outlined on the vehicle with chalk,

using reference points on the vehicle and making a conscious effort to maintain the relative shape of the different color areas. High precision is not required in marking if the shape and size of the patterns are kept within reasonable tolerances (plus or minus 2 inches). Care must be taken. however, to avoid straight, vertical, and horizontal lines wherever possible. The pattern is marked (fig. 3-3) with an abbreviation or number of the color to be used in each area (paint-by-the numbers) to guide the painter.

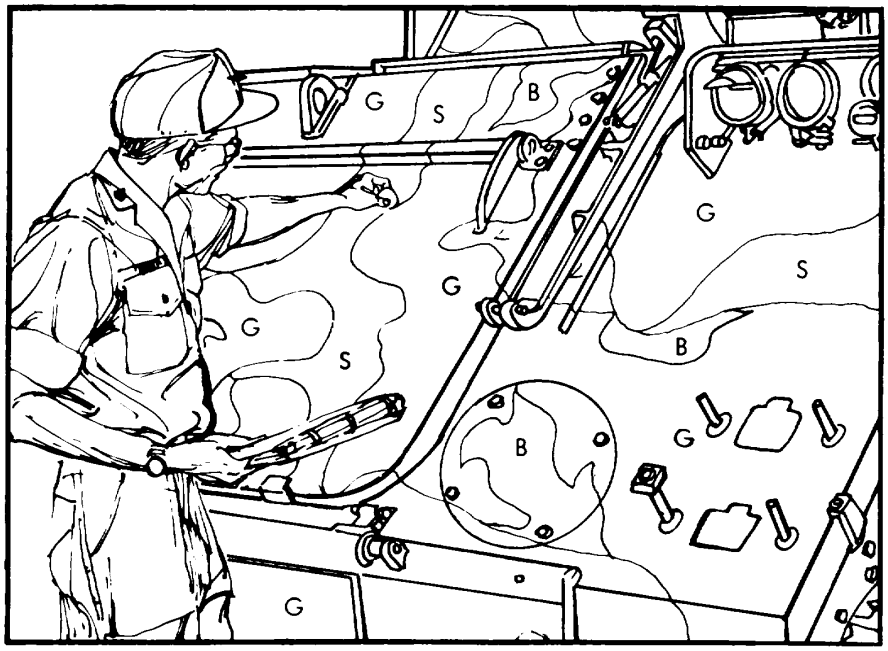

NOTE THAT THE ABBREVIATION OF THE COLOR IS MARKED IN EACH PATTERN AREA.

TS 018436

Figure 3-3. Soldier applying a pattern with chalk.

3-7. Paints. The paints and thinners to be used in pattern painting are to be obtained through normal supply channels. Pattern painting will begin upon receipt of the necessary pattern designs and paints.

a. Enamel, Alkyd, Camouflage, Specification MIL-E-52798. This is the standard paint for use in the pattern painting. It is a new synthetic camouflage alkyd enamel for use as a finishing coat on military equipment. Except for white, it comes in the standard camouflage colors. The new camouflage alkyd enamel is on expedited procurement. National stock numbers for this enamel are as follows:

	National stock number	
Color	*5 gallons*	*1 gallon*
Desert sand	8010-00-111-8353	8010-00-111-8004
Sand	8010-00-111-8336	8010-00-111-7988
Earth yellow	8010-00-111-8130	8010-00-111-7968
Earth red	8010-00-111-8345	8010-00-111-8003
Field drab	8010-00-111-8129	8010-00-111-7943
Earth brown	8010-00-111-8338	8010-00-111-7998
Olive drab	8010-00-111-8069	8010-00-111-7940
Light green	8010-00-111-8007	8010-00-111-7930
Dark green	8010-00-111-8042	8010-00-111-7938
Forest green	8010-00-111-8010	8010-00-111-7937
Black	8010-00-111-8356	8010-00-111-8005

b. White Water Paste, Specification MIL-P13340. This is used where white is one of the four colors specified in the camouflage pattern (figure 3-2). NSN 8010-00-597-5253 for 5-gallon can.

c. Butyl Cellosolve, Specification TT-E776B. Ethylene glycol monobutyl ether, NSN 6810-00-281-2001 for 1-gallon can. This is used as a secondary thinner for the enamel.

d. Xylem Specification TT-X-916. NSN 681000-584-4070 for 5-gallon drum; NSN 6810-00290-4166 for 55-gallon drum. This is used for thinning the enamel.

e. Mineral Spirits, Specification TT-T291. NSN 8010-00-558-7026 for 5-gallon drum; NSN 8010-00-246-6115 for 55-gallon drum. This is also used for thinning the enamel.

f. Thinner, Cellulose-Nitrate Dope, Blush Retardant, Specification MIL-T-6095B. NSN 8010-00-162-5289 (1 gal.). This is used in preparing paint for neoprene-coated tarpaulins used with the gamma goat vehicle.

g. Preservative Coating, Canvas, Specification TT-P-595A. No NSN. This is used in prepreparing paint for cotton duck canvas.

3-8. Paint Mixing. *a. Vehicles.*

(1) The enamel has to be thinned for various temperatures and humidity conditions. The thinners to be used and mixed are as follows: 30 °F. - 60 °F. - Xylene 60 °F.- 80 °F.- Mineral spirits Above 80 °F., moderate relative humidity (up to 55 percent), it may be necessary to add butyl cellosolve to allow flow-out of the paint. For these conditions, the maximum use of butyl cellosolve shall be 8: 1 of mineral spirits and butyl cellosolve, respectively.

(2) If raining or if temperature is above 80 °F. with high humidity (above 55 per cent), the maximum use of butyl cellosolve, if necessary, shall be 5: 1 of mineral spirits and butyl cellosolve, respectively .

b. Neoprene-Coated Tarps (Used with Gamma Goat). The enamel must be thoroughly stirred before mixing with the thinner to make sure of complete mixing of the pigment and dulling agents. The thinner combination shall be 1/2 pint of cellulose-nitrate dope, blush retardant to every 1 gallon of xylene. The mixture then should be stirred thoroughly. This thinner combination is used to thin the enamel. The make sure the coating has enough pigment and dulling agent in it to coat the fabric well, stir the paint mix each time a spray gun is filled.

3-9. Painting Techniques. *a. Basic Painting Instructions.* For basic painting instructions, including care and maintenance of painting equipment, refer to TM 5-618 or TM 43-0139.

b. Spray Painting.

(1) Use of paint-spraying equipment is the most efficient and economical way to apply the paint to the vehicle. The first step is to outline the pattern on the vehicle using the spray gun. The painter uses the chalk marks as a guide for his outlining, but he must wipe the chalk marks off the surface as he paints or the markings will show through the new paint job and cause poor adhesion along the chalk lines.

(2) The color areas are then filled in with the required color paint. For good paint adhesion and coverage, the painter must make sure that the newly painted surface appears wet upon application. At first, it may be easier and more accurate to use a brush to fill in the small black areas (fig. 3-4). As a higher degree of skill is gained with the spray guns, these may be used to fill in the black areas also.

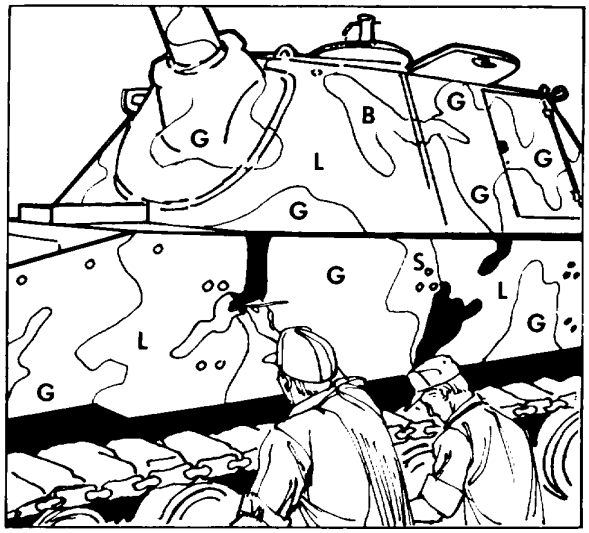

NOTE: WHEN GREATER SKILL WAS GAINED WITH THE SPRAY EQUIPMENT, MOST UNITS SPRAY PAINTED THIS AREA.

TS 018437

Figure 3-4. Soldiers apply the black area with a 1/2 inch brush.

c. Brush Painting. A small amount of brush painting may be used in places hard to reach with spray guns, and to speed up work if there are not enough spray guns. However, while brush painting is efficient and effective for small areas, brush painting of the larger color areas is slower and uses more paint than spray painting.

NOTE

Roller painting was tested and found to be unsuitable for pattern painting vehicles.

d. Tips. Below is a list of tips to follow when painting.

(1) Make sure vehicles are clean of oil and dirt; otherwise the paint will not stick to the surface.

(2) Remove and/or sand all loose or flaking paint.

(3) Remove completely all plastic letters and insignia and clean the surface with thinner or solvent to remove any remaining glue.

(4) Cover all grease fittings to prevent fouling.

(5) Thoroughly stir all new cans of paint before mixing.

(6) Mix the paint in batches of 3 to 4 gallons and stir thoroughly before each spray cup is filled.

(7) Adjust paint gun to insure proper paint and air mixture.

(8) Hold the spray gun close to the work to prevent excessive overspray or a spray that is too dry.

(9) Wipe chalk markings off the vehicle as paint is applied.

(10) Be sure the new paint coating looks wet on application.

(11) Do not walk over or touch the coating while still tacky.

(12) Clean all spray equipment and brushes thoroughly at the end of each day.

(13) Keep spray guns clean. It is advisable to run thinner through the gun before each filling or clean it if there are any signs of caking present.

(14) Cover paint cans and pots to prevent a skin from forming on the paint.

(15) Maintain good housekeeping in and around the paint mixing and filling area.

(16) Drain water from compressors and water separators.

3-10. Painting Estimates. *a.* Some estimates on man-hours and amounts of paint and thinner needed are given in figure 3-5. These figures were developed in field tests of pattern painting and may serve as a rough guide to the labor and materials required. It must be expected that the first two to five vehicles painted may take as much as double the time shown in the table.

TYPE OF VEHICLE	AVERAGE MAN-HOURS[1]	AVERAGE PAINT (gal)	AVERAGE THINNER (gal)
M35	15	1.00	.50
M51	17	2.00	1.00
M60A1	30	2.16	1.10
M88	19	1.50	.75
M109HOW	15	1.00	.50
M109VAN	18	1.00	.50
M113	20	.83	.42
M125	20	.83	.42
M151	12	.50	.25
XM163	14	1.00	.50
M561	12	1.00	.50
M577	20	1.16	.58

Note[1] Troop labor

TS 018438

Figure 3-5. Pattern painting estimates.

b. The camouflage alkyd enamel sets to the touch in 2 hours, dries hard in 8 hours, and reaches full hardness in 72 hours.

3-11. Maintenance. Operation of vehicles under field conditions is rough on their paint. Retouch painting is necessary for good durability and appearance of the camouflage patterns. The same camouflage alkyd enamel used for the original pattern painting should be used for any retouch

painting. Small areas needing touchup paint may be redone most quickly and economically with a brush. Extensive retouching is most efficiently done by spray painting.

3-12. Training Notes. *a.* Soldiers are not likely to be experienced painters. However. most soldiers can do an acceptable job after a short training period. This training must include a demonstration of' pattern painting (marking the vehicle. mixing paint and thinners. using brushes and spray equipment and a supervised practical work exercise.

b. Since an acceptable skill level comes only after some experience, it is suggested that a small group of soldiers (4 or 5) be selected for training.

They would then paint all the vehicles and other items in the unit. This is the most effective and efficient way to get a quality paint job.

Section II. PATTERNS

3-13. General. Following is a list of the TRO-SCOM equipment whose patterns are illustrated in Chapter 3 of this bulletin.

a. AVLB (figure 3-8).

b. Bridge, Ribbon: Interior Bay on Transporter (figure 3-15).

c. Bridge, Ribbon: Ramp Bay on Transporter (figure 3-16).

d. Bridge, Erection Boat (figure 3-14).

e. Compressor, 250 CFM (figure 3-7).

f. Demineralizer, ION Exchange: 3000 GPH (figure 3-22).

g. Fire Fight Equipment Set: Trk Mtd, Class 530 Series (see M530C) (figure 3-6).

h. Fire Fight Equipment Set: Guided Missile, Class 1500 (figure 3-23).

i. Lubricating Service Unit, Trlr and Skid Mtd (see 600 GPH Wtr purification unit) (figure 3-26).

j. Mobile Assault Bridge (MAB) and Transporter (figure 3-13).

k. Shop Outfit, Woodworking, Trlr Mounted see M105) (figure 3-12).

l. Tool Outfit, Pioneer, Trlr Mtd (figure 3-12).

m. Transporter, Ribbon Bridge. 5 Ton (M812) (figure 3-17).

n. Truck, Fire Fight: Pump Foam and Wtr, 500 GPM (M530C) (figure 3-6).

o. Truck, Fire Fight: Brush Pumper Crash Type Wtr and Foam, 750 GPM (see M530C) (figure 3-6).

p. Water Purification Unit: Trlr Mtd, 600 GPH (figure 3-26).

q. Water Purification Unit: Trk Mtd, 1500 GPH (see M109 Van) (see 2 1/2 T Van, M185 Instrument Shop) (figure 3-10).

r. Water Purification Unit: Trk Mtd. 3000 GPH (figure 3-25).

s. Gas Generator Plant (see M128) (figure 3-11).

t. Generator Sets (see table 3-1) (figures 3-19 through 3-21).

u. Compressor. 600 ('FM 'figui'e 3-28).

v. Map Reproduction Unit. Trlr Mtd (Body Van, MIL-B-13207) (figure 3-43).

u. Bakery Oven Trailer Mounted, M-533 (figure 3-27).

x. Compressor Air MIL-C-555 (figure 3-28).

y. Conex Container MIL-B-21560, Type I (figure 3-29).

z. Conex Container MIL-B-21560, Type 11 (figure 3-30).

aa. Container, Tricon MIL-B-11886 (figure 3-31).

ab. Cooling Tower, Liquid. Semitrailer (figure 3-32).

ac. Dough Mixing and Makeup Outfit, Trailer Mounted, M-534 (figure 3-33).

ad. Cabinet, Dough Proofing, Insulated, Portable, 36 Pan Capacity (figure 3-34).

ae. Dough Trough, Bakers (for Mobile Bakery, M-534) (figure 3-35).

af. Tarpaulin. Laundry, Trailer Mounted, Single Trailer Type, M-532 (figure 3-36).

ag. Air Supported Shelter (figure 3-37) (sheet 1 of 2).

ah. Air Supported Shelter (figure 3-37) (sheet 2 of 2).

ai. Tank, Fabric, Collapsible, 10,000 Gallon, Petroleum (figure 3-38).

aj. Tank, Fabric, Collapsible, 50,000 Gallon, Petroleum (figure 3-39).

ak. Tank, Storage, Liquid Gas, Skid Mtd, MIL-T-3784 (figure 3-40).

al. Fork Lift Truck 10.000 Lb., Rough Terrain (figure 3-41).

am. Truck, Fork Lift. COML 15,000 and 50,000 Lb (figure 3-42).

an. M60 Tank, 105MM, Hull (figure 3-9).

ao. Semi-trailer, 15 Low Bed AN/MJQ-11 (figure 3-24).

ap. **Shelter, Expandable, for Shop, Portable, Aircraft Maintenance (SPAM), (figure 3-44).**

Table 3-1. Power Units and Power Plants

Item	Power Units	W Tarp	Trailer	Gen Pwr	Pattern
1	PU-332 A/G	X	M101A1 3/4T	10/60	M10IA1
2	PU-375 B/'G	X	M101A1 3/4T	10/400	M101A1
3	PU-405/M		M200A1 2-1/2T	15/60	PU-405/m
4	PU-406 A/M		M200A1 2-1/2T	30/60	PU-406A/M
5	PU-409 A/M	X	M101A1 3/4T	5/60	M010A1
6	PU-495/G		M353 3-1/2T	100/60	PU-495/g
7	PU-617/M	X	M101A1 3/4T	3/60	M101A1
8	PU-618/M	X	M103A3 1-1/2T	5/60	M101A1
9	PU-619/M	X	M103A3 1-1 2T	10/60	M101A1
10	PU-620/M	X	M116A1 3/4T	5/60	M101A1
11	PU-650 A/G		M200A1 2-1/2T	50/60	PU-406A/M
12	PU-656/G	X	M103A3 1-1/2T	10/400	M101A1
13	PU-666/G	X	M101A1 3/4T	3/DC	M101A1
14	PU-707/M		M200A1 2-1/2T	60/400	PU-406A/M
15	AN/MJQ-10		M200A1 2-1/2T	30/60	PU-406A/M
16	AN/MJQ-11		Semi 15T Low Bed	200/60	AN/MJQ-11
17	AN/MJQ-12		M200A1 2-1/2T	60/60	PU-406A/M
	PU-732/M		M200A1 2-1/2T	15/400	PU-406A/M
	PU-753/M	X	M116A1 3/4T	10/60	M101A1
	PU-760/M		M200A1 2-1/2T	30/400	PU-406A/M
	AN/MJQ-16	X	M103A3 1-1/2T	5/60	M101A1
	AN/MJQ-18	X	M103A3 1-1/2T	10/60	M101A1
	AN/MJQ-15		(2) PU-732/M	15/400 (2)	406A/M

NOTE: (1) On each Dwg, list units with same pattern.
(2) Add extensions note for various heights.

3-14. Policy. *a.* Colors and markings prescribed in tables 3-2 through 3-8 are applicable for use on all specified types of materiel. Procuring activities will require manufacturers to use colors consistent with criteria established herein. Materiel shipped to Army requisitioners will be painted and marked as applicable in accordance with tables 3-2 through 3-8.

b. The colors prescribed herein conform to Federal Standard No. 595.

c. All new materiel and materiel undergoing depot overhaul, except aircraft, will be painted in lusterless forest green, MIL-E-52798 (ME) (at installations using air dry paint facilities). Installations using oven dry facilities will paint equipment, except aircraft, in lusterless forest green, MIL-E-52835. Upon receipt by using units, camouflage patterns will be applied to all tactical mobile equipment, except aircraft, in accordance with instructions in appropriate field and technical manuals. Special painting of materiel to be shipped to oversea theaters may be accomplished in CONUS when time and available resources permit.

d. Equipment will be repainted only when required for preservation purposes, or overhaul, in colors authorized by this technical bulletin.

Repainting will not be done merely for the

purpose of changing color unless considered necessary for safety or security purposes by the responsible commander. Spot painting for preservation only will be the rule rather than the exception.

e. The style, size, and exact location of markings prescribed herein are specified in applicable technical bulletins in the 746 series and other DA technical publications. Markings may be applied in the form of adhesive backed markers of the prescribed color, or may be painted on when markers are unavailable or application must be made on canvas or other porous surface. Nonreflective markers will be of material conforming to MIL-M-43719, type II, class 1, and will conform to applicable detailed specification sheets. Reflective markers will be of material conforming to Federal Specification L-S-300, Type I or II, class 3, reflectivity 1.

f. Technical data and information will be marked in equipment in accordance with applicable DA technical publications. Where appropriate, such data and information will be contained on metal or plastic plates or decals.

g. Red Cross -insignia, prescribed herein for Army Medical Department equipment, will consist of a red cross composed of four square-shaped arms bordering on a center square of the same size and superimposed on a square white field slightly larger than the cross.

h. Equipment will not be decorated with individual characteristic designs such as caricatures, cartoons, or coat of arms.

i. Under tactical conditions, when requirements for concealment outweigh those for recognition, all conspicuous markings may be obscured or removed by the authority and at the discretion of the major organization commander present.

j. Oversea commanders may deviate from this TB 43-0147 bulletin when host countries require special markings in accordance with international agreements.

k. When Army materiel is sold or permanently transferred from jurisdiction of DA, all Army identification markings will be removed or permanently obliterated prior to such disposition.

3-15. Responsibilities. *a.* Commander, US Army Forces Command (FORSCOM); Commander, US Army Training and Doctrine Command (TRADOC); Commanders, Major Oversea Commands; Commander, US Army Strategic Communication Command (USASTRATCOM); Commander, US Army Security Agency (USASA); The Surgeon General, Chief of Engineers, and the SAFEGUARD System Manager are responsible for:

(1) Publications of implementing instructions and providing guidance to subordinate commands including Army Reserve.

(2) Insuring that provisions of this regulation are accomplished.

b. Commander, AMC is responsible for:

(1) Providing guidance to major Army commands and other activities as requested.

(2) Providing guidance and implementing instructions to AMC subordinate commands as related to procurement, repair, and overhaul activities.

3-16. Request for Waiver. Request for waiver to the provisions of this bulletin applicable to communications security (COMSEC) Equipment (FSC 5810) will be forwarded to CDR, USACC, and for cryptological equipment (FSC 5811) to CDR, USASA. Request for waivers for all FSC except 5810 and 5811 will be forwarded to Commander, AMC, ATTN: AMCMA-V, 5001 Eisenhower Ave., Alexandria, VA. 22333.

Table 3-2. Vessels

Equipment	Color	Markings
Vessels: Decks, walls and other walkway surfaces.	Set TB 746-93-4 Olive Drab nonslip deck covering Compound, NSN 5610-00-782-5556 (1 gal.) MIL-D-23003 or black. conformable nonslip walkway matting, MIL-W-5044, Type IV.	See TB 746-93-4

Table 3-3. Railroad Equipment

Equipment and markings	Color	Placement
1. Locomotives, tenders, and work equipment.	Semigloss black 27038.	Exposed exterior surfaces.

Table 3-3. Railroad Equipment-Continued

Equipment and markings	Color	Placement
2. Rolling stock.		
a. Freight, passenger hospital, kitchen and caboose cars.	Gloss olive green 14064.	Exposed exterior surfaces.
b. Gondola, hopper, and tank cars.	Gloss black 17038	Exposed exterior surfaces.
MARKINGS		
Markings may be adhesive backed. (Markers or paint conforming to color requirements.)		
1. Agency identification "US ARMY."	Gloss white 17875	On both sides of all railroad equipment, except in theaters of operations, it will not be applied to freight cars and cabooses.
2. Identification numbers.	Gloss white 17875	*a.* On both sides and each end of all locomotives. locomotive tender units, work equipment, and rolling stock. *b.* On rolling stock, car numbers will be prefixed with letters "USA" immediately to the left of or above car number. *c.* In CONUS, freight and caboose car acceptable for interchange on commercial railroads will use the prefix "USAX" in lieu of the above where specifically authorized by the Director of Supply, AMC. In such cases the identification number and "USAX" prefix also will be marked on the ends of the truck of those cars.
3. Army Medical Department markings:		
a. Red Cross insignia	Gloss red 1136 and gloss white 17875.	On both sides and on the roof of all kitchen, baggage, ambulance ward, and personnel cars assigned Army Medical Department. The insignia applied to the side of the cars will he located near the end of the car.
b. "'ARMY MEDICAL DEPARTMENT"	Gloss white 17875.	These words and type of car will be marked on both sides of Army Medical Department cars near the center of the car. The type of car also will be in conjunction with identification number of the car.
c. Army Medical Department insignia (red caduceus on a circular white field.)	Gloss red 11136 and gloss white 17875.	On both sides of Army Medical Department cars near the center of the car. It will be placed on each side of or adjacent to the words "Army Medical Department" and type of car marked as *b* above.
4. Safety Markings (CONUS only).	Gloss yellow 13538 or reflective L-S-300, color j.	A stripe will be marked yellow adhesive backed marker across each side and conforming to Federal Specification across each end of all locomotive and locomotive tender units. Access steps to locomotive and locomotive tenders will be painted also.

Table 3-4. Vehicles

Equipment and markings	Color	Placement
EQUIPMENT		
1. Vehicles.	Lusterless camouflage pattern in accordance with appropriate technical publication Nonslip compound:	Exterior surfaces.

Table 3-4. Vehicles - Continued

Equipment and markings	Color	Placement
1. Continued	White, NSN 5610-00-827-2450 (1 gal), MIL-D-23003 and lusterless forest green, NSN ( ) (1 gall, MIL-E-52798 (ME).	Walking areas (catwalks, walkways, platforms, cabs. fenders, frames, guards, foot-operated controls, mounting steps, ladders, top of bumpers, slope and deck plates, turret floors, crew compartments ramps, van floors, etc.), interior surfaces.
2. Firefighting vehicles auxiliary vehicles assigned exclusively for firefighting or protection against fires and airfield crash rescue vehicles.	Gloss red 11136 when in non-tactical use.	Exterior and interior surfaces.
3. Fuel and oil dispensing vehicles used in nontactical areas.	Gloss yellow 13538	Exterior and interior surfaces.
4. Refrigerator vans in non-tactical use in hot climates.	Gloss white 17875 or solar heat-reflecting camouflage semigloss enamel 24087 conforming to MIL-E-46136 or MIL-E-46139; or solar heat-reflecting camouflage lusterless enamel olive drab conforming to MIL-E-46117.	Applicable exterior surfaces, upon authorization by the theater commander.
5. Water tank vehicles in non-tactical use in hot climates.	Same as paragraph 4 above.	Same as paragraph 4 above.
6. Van type vehicles in non-tactical use in hot climates assigned to center or schools for the purpose of training personnel in the operation of equipment installed therein.	Same as paragraph 4 above	Same as paragraph 4 above.
7. Van type vehicles and shelters in non-tactical use in hot climates in which installed equipment would be adversely affected, or personnel would not be able to accomplish assigned technical functions due to the excessive heat from solar radiation.	Same as paragraph 4 above	Same as paragraph 4 above.
8. ***a***. Tracked combat vehicles and special purpose armored hull-type vehicles. Exception: see ***b*** below.	Gloss white 17875. White non-slip deck covering compound NSN 5610-00-857-2450(lgal) MIL-D-2003 or black, conformable nonslip walkway matting, MIL-W-5044, Type IV. Lusterless forest green.	Interior surfaces. Over primed and painted surface of crew compartment or turret floor. Surfaces such as doors and hatches which become exterior surfaces during operational use.
b. M113 personnel carrier family of vehicles.	Semigloss green 24533 Lusterless forest green then coated with olive drab nonslip deck covering compound NSN 5610-00-782-5556 (1 gal), MIL-D-23003 or black, conformable nonslip walkway matting, MIL-W-5044, Type IV. Lusterless forest green.	Interior surfaces. Floors and ramps. Interior surfaces of doors and hatches which become exterior surfaces during operational use.
9. Interior surfaces of van type bodies equipped with interior lighting and which personnel are required to perform certain detail operations.	Semigloss green 24533. Where greater brightness is required, ceiling may be painted semigloss white 37875. Semigloss green 24533 Lusterless gray 36118. Semigloss green 24410	Ceiling. Walls, doors and fittings. Floors. Equipment cabinet of guided missile system vans.

Table 3-4. Vehicles - Continued

Equipment and markings	Color	Placement
	Semigloss gray 26492	Panels.
10. National symbol (5 pointed star).	Star will be 3" measured from point to point. lusterless black 37038.	Star will be applied at time of manufacture or by depots only when material is specifically designated for issue to US Army units.
a. Tactical and combat vehicles and related equipment, including support and special purpose vehicles in CONUS and overseas.	Lusterless black 37038.	One each, centered on front and rear, of any suitable vertical or near vertical surface such as bumpers and tailgates, where it will not be obscured by canvas items, gasoline cans, pioneer tools or other objects. Normally, stars will not be applied to ambulances or other medical service vehicles affected by international agreement or to ground support equipment at Army airfields in CONUS.
b. Mounted equipment	Lusterless black 37038.	Only where there is no more suitable surface on the vehicle.
MARKINGS		
11. Unit identification (abbreviations representing the complete identification of the unit to which the vehicle or equipment is' assigned). Specific abbreviations to be used, and methods of application are prescribed by applicable DA technical publications.	Lusterless black 37038	*a.* Markings will be in uniform Gothic style letters; the numeral to be the largest size practical to use in available space, but not to exceed 4 inches in height.
		b. Normally they will appear on both front and rear of each item of equipment. usually on the bumpers when so equipped. "Where a more suitable surface is available, such surface may be used provided that the location is not in conflict with the location of other prescribed markings. Where a suitable surface is not available on the front or rear of an item of equipment, they will be applied in an appropriate location on the side of the item.
		c. They will be applied to vehicles and equipment by the organization to which material is assigned. They will be maintained on vehicles and equipment at all times but will be removed when the item is permanently transferred from the operating unit.
		d. When directed by the responsible commander for security purposes, the first two categories of markings (a and b of footnote) will be thoroughly removed from all vehicles and equipment being shipped with units from CONUS to oversea commands. To insure effective removal, the original figures must be physically erased rather than painted over.

See footnote at end of table.

Table 3-4. Vehicles - Continued

Equipment and markings	Color	Placement
11. Continued		
Mounted equipment	Same as above.	May be applied when necessary.
12. Weight classification for bridge crossing. (For weight classification numbers see FM 5-36).	Black numerals on a yellow circular background 9 inches in diameter. When towing another vehicle, the weight classification number of the combination will be shown with the letter "C" red above the number.	On the front of applicable self-propelled vehicles.
a. All vehicles with a gross weight of over 3 tons; all trailers with a rated pay-load of 1-1/2 tons and over.	On vehicles painted in gloss colors, use gloss yellow 13538, gloss black 17011P. and gloss red 11136. On vehicles painted in semigloss or lusterless colors use lusterless yellow 33538, gloss black 17038 and gloss red 11136.	
b. Combination vehicles.	Black numerals on a yellow circular background 6 inches in diameter. Color numbers same as above	The *gross weight* classification of the Prime mover alone and of the towed vehicle alone will be marked on the right side of the respective vehicle.
c. Current policy on color of weight classification markings on camouflage painted vehicles is as follows:	On vehicles painted lusterless colors, in accordance with camouflage policy, weight classification numbers (3 inch high) will be painted to lusterless black directly onto camouflage pattern. For camouflage purpose, marking maybe lusterless black 37038 on lusterless forrest green background.	
13. Safety.		
a. Stripes (vehicles and equipment in nontactical use, which because of size, construction, or function present a possible hazard).	Alternate gloss yellow 13655 and gloss black 17038 stripes in accordance with AR385-30.	Normally, stripes are applied only to the rear, but they may also be applied to the front and certain side surfaces when the conditions so warrant.
b. “FLAMMABLE" and "NO SMOKING WITHIN 50 FEET” - vehicles used for bulk transportation of gasoline, fuel oil, or other flammable liquids by Army units subject to the Army camouflage policy.	Lusterless Black 37038. The word "FLAMMABLE in 6-inch letters; the words "No SMOKING WITHIN 50 FEET" in 3-inch letters.	On both sides and rear of body. “NO SMOKING WITHIN 50 FEET" should be placed on a line below the word FLAMMABLE."
“FLAMMABLE" and "NO SMOKING WITHIN 50 FEET" - vehicles used for bulk transportation of gasoline, fuel oil, or other flammable liquids by Army units not subject to the Amry camouflage policy or in nontactical use.	When vehicle is commonly used on public highways in C0NUS, Title 49 Spec. 177.823, Code of Federal Regulation (49 CYR 177.823) requires 6-inch block letters for word “FLAMMABLE" and 3-inch block letters for "NO SMOKING WITHIN 50 FEET. Letters shall be Gloss Red 11105 or 11136 on a Gloss White 7875 background. (Ref. 49 CFR 172.542 for specifications and AR 55-355 for example of placards).	On both sides and rear of body. "NO SMOKING WITHIN 50 FEET" should be placed on a line below the word “FLAMMABLE". Vehicles used infrequently on public highways must employ removable or re-versible signs which are securely fastened while in use. These safety markings will be applied upon receipt by the using service.
c."____GALS CAP." Fuel oil dispensing vehicles and equipment used for serving aircraft.		On side of tank near each .manhold cover. In addition, type of fuel or oil by military designation will be marked nearby.
d. Placards. (vehicles carrying explosives or other dangerous articles).		
(1) Over public highways.		Placards will be used in accordance with applicable DOT regulations and AR 55-355.
(2) Training areas.		Placards will be used in accordance with applicable DOT regulations and AR 385-63.
e. Reflective markings (vehicles and ground support equipment used on airfield flight lines)		As in TM 55-1500-204-25/1
f. Flags (all vehicles not painted in accordance with items 2 and 19 listed under equipment of this table and *c* above.		Vehicles will bear a distinctive flag whenever operating on landing areas, runways, taxiways, or Peripheral roads at airfields. The flag will be square at least 3 feet on each side and will be divided into 9 equal size squares forming a checkerboard pattern with

Table 3-4. Vehicles - Continued

Equipment and markings	Color	Placement
13. Continued		center and corner squares in international orange and the remaining 4 squares in white. A red flag will be mounted on vehicles to indicate danger when considered necessary to caution personnel of a hazardous condition in the area.
g. DA Label 76. Good Driver to promote good driving).		Display in all motor vehicles to be ready visible to the drive. Requisition through normal publication channels.
14. Convoy markings as prescribed by FM 55-30.	Serial letter or number may be black on reflective signboard background	
15. Tactical markings (may consist of stripes geometrical figures other simple designs, or naming of individual vehicle). They will be used to provide a more visible means of identifying the vehicles of tactical units by personnel of those units during tactical operations. They will be of a suitable size to facilitate identification from ground or from a reasonable distance. They will be designed to be as nearly unintelligible as possible to enemy observation. Under no circumstances will they in any way represent the numerical designation or distinctive insignia of any unit. Under actual combat conditions, no written record will be made or published on the system of tactical markings used.	Any appropriate color	As prescribed by commanders of major Army commands, any changes must be approved by those commanders.
16. Priority signs. They will be authorized by the area commander. They are valid only within the area under his jurisdiction. Signs must not be displayed when vehicle is not actually being used for a priority mission and must be removed when no longer required for that mission.		On front and rear of vehicle. They will lei(fabricated and mounted on vehicles in accordance with TB 4G6-93-1 Vehicles under the jurisdiction of NATO will comply with TB 34-9-249.
17. Air recognization panels.	Red fluorescent on one side and yellow fluorescent on the reverse side.	Marked as directed by the appropriate major commander as to the arrangements and conditions under which they will be used. It will draped on vehicle in a standard unchanging pattern different from displays prescribed for other recognition purposes such as front lines, targets, etc . Size: 6’ by 2”3", each panel having a tie cord of adequate length in each corner.
18. Commercial design vehicle markings. Unless otherwise specified, vehicles assigned to TOE or TD units, or to other organizations and activities for nonadministrative use.		Similar to markings used on military design vehicles

Table 3-4. Vehicles--Continued

1 These markings are divided into four elements arranged from left to right, as follows:

a. Major Command, Organization, or Activity. The major headquarters having jurisdiction over the vehicle or equipment normally not lower than a division, brigade, group, or major subordinate command.

b. Intermediate Organization or Activity. The next lower headquarters having jurisdiction over the vehicle or equipment normally the headquarters above the unit to which the vehicle or equipment is assigned. This includes regiments separate battalions. installations. and separate companies or attachments not assigned to an intermediate headquarters.

c. Unit or Activity. The lowest unit or activity to which the vehicle is assigned normally a company type unit. This space may be used to identify the type of separate company or detachment already identified above.

d. Vehicle or Equipment Number. The sequence number of the vehicle or equipment in the normal order of march within the unit to which it is assigned

Table 3-5. Communications--Electronic Equipment I

Equipment and markings	Color	Placement
1. Photographic and audiovisual.	Lusterless forest green or lusterless black 37038 as appropriate.	Exterior surface.
2. Tactical communications.	Lusterless forest green.	
3. Avionics.	Same as above.	
4. Meterological.	Same as above.	
5. Radiac.	Same as above.	
6. Marine communication and electronics	Same as above, except as noted in 16 below.	
7. Antenna towers for use under nontactical conditions.	Alternating bands of gloss orange 12197 and gloss white 17875, with the band at each end colored orange.	As specified in DOT's AC/746-1, the bands should be of equal width with each band being approximately one-seventh the height of the tower, provided that each band will have a width not more than 40 feet nor less than 1-1/2 feet.
8. Armed Forces Radio and Television Network.	Lusterless forest green or lusterless gray 36138.	
9. Antenna Radomes.	Lusterless forest green or lusterless white 37875.	
10. Automatic data processing.	Lusterless forest green or lusterless gray 36118.	
11. Ground controlled approach (GCA) radar equipment used at Army airfields.		
a. Tactical equipment by TA/TOE	Lusterless forest green including wave guides and antenna reflectors. Reflectors may be painted lusterless forest green nonconductive paint conforming to MIL-E-46839.	
b. Equipment authorized for CONUS- Army airfields by TA.	In accordance with Federal Aviation Administration Technical Standards Order, TSO. N26.	
12. Communications equipment installed at fixed facilities, such as radio station equipment, telephone control office sets.	Lusterless forest green or lusterless gray 36118.	
13. Electronics test equipment	Semigloss gray 26307.	
14. COMSEC (FSN 5810) and cryptological equipment (FSN 5811).	See TB SIG 351.	
15. Special intelligence equipment.	See AR 381-143.	
16. Antenna or radiating elements, antenna base, insulators, or fiberglass casing.	Will not be painted unless special approval is obtained from ECOM laboratories.	
17. Electronic-communication shelters.	Enamel Alkyd, Camouflage, Specification MIL-E-52798. Semigloss green 24410.	Exterior surfaces Interior surfaces: wall, ceilings, doors and fittings.

1. Communications-electronics equipment already in use, or that purchased as a nonmilitary item direct from commercial stock need not be repainted in accordance with this table if the color does not adversely affect equipment operation or the tactical situation. This will hold true particularly in the case of equipment that is housed in shelter aircraft vehicles or vessels.

Table 3-5. Communications--Electronic Equipment - Continued

Equipment and markings	Color	Placement
17. Continued	Lusterless gray 36118. Gloss white 17875.	Floors. Interior surfaces or other containers, cabinets, or shelter, if painting is required.
MARKINGS (Markings may be adhesive backed markers or paint conforming to color requirements. I		
18. Unit identification.	Lusterless black 37038.	As prescribed in applicable DA technical publication.

Table 3-6. Other Material

Equipment and markings	Color	Placement
EQUIPMENT		
1. Army materiel intended for field use and not otherwise specified Herein.	Lusterless Forrest Green: or appropriate camouflage pattern applicable. technical publications.	Exterior surfaces.
2. Fire control materiel.	See MIL-STD-194.	
3. Conventional and chemical ammunition.	See MIL-STN-709.	Markings will be in accordance with approved drawings.
4. Chemical warfare.	Lusterless forest green, except such equipment, mounted on vehicles will be painted the same color specified for the vehicle in accordance with approved drawings	
5. Fire extinguishers (regardless of types, size, or location on equipment.	Red in accordance with the military of Federal Specification under which they were procured. The color chip number is 21136. Commanders in theaters of operation are authorized to repaint extinguishers for camouflage purposes.	Exterior surfaces.
6. Reusable shipping transporters COMX/MILVAN containers).	Types I and II-lusterless forest green.	Exterior surfaces.
7. Machine tools and associated shop equipment.	Gloss gray 16187. Exceptions are: at fixed facilities such equipment may be painted semigloss green 24272 safety color code markings in AR 385-301) and emergency stopping switches and bars on such equipment will be painted gloss red 11105 or 11136.	
8. Miscellaneous equipment at fixed Facilities.	See AR 385-30.	
9. Commercial type items originally procured in nonstandard colors.	Maintain in existing colors. When repainting becomes necessary. Use appropriate standard colors.	
10. Equipment used for instructional purposes.	Use other than authorized colors, if the varied colors add significantly to the effectiveness of instruction When equipment is returned to stock, it will be repainted and marked with authorized colors.	
MARKINGS (Markings may be adhesive backed markers or paint conforming to color requirements).		
11. Unit identification.		As prescribed in applicable DA technical publications.
12. Static training equipment.		The national symbol and other markings are not required on this equipment.

Table 3-7. Bridging Equipment

Equipment and markings	Color
EQUIPMENT	
1. M48A2 and M60 armored vehicle bridge launcher.	Interior: Semigloss green 24533. Exterior: Lusterless camouflage pattern in accordance with appropriate technical publication.
2. M-2 panel bridge (Bailey), Bailey bridge erection equipment. Bailey bridge conversion set, and Bailey bridge cable reinforcing kit.	Lusterless gray 36231.
3. Bridge erection set, fixed bridges.	Lusterless gray 36231 except as follows:
a. Parts E159-E191.	Lusterless orange 33538.
b. Parts E36N-E41N, E58N-EGOAN, E122-E129BN, and E131N-E133N.	Lusterless red 30109.
4. Fixed steel I beam railway bridge.	Lusterless orange 33538.
5. Fixed steel railway bridge, 70 foot.	Lusterless red 30109.
6. V.-type) steel trestle.	Lusterless blue 35044.
7. Certain parts of the aluminum footbridge structure as outlined in the item specification.	Lusterless white 37875.
Walkway	Antiskid compound olive drab FSN 5610-782-5556 (1 gal). MIL-D-23003 or black conformable nonslip walkway matting, MIL-W-5044, Type IV.
8. All other bridging equipment.	Lusterless forest green.
MARKINGS	
(Markings may be adhesive backed markers or paint conforming to color requirements).	
9. Stenciling and identification.	Lusterless black 37038.

Table 3-8. Amphibious Equipment

Equipment and markings	Color
EQUIPMENT	
1. Mobile floating assault bridge (MAB) transporter and superstructure.	Lusterless camouflage pattern in accordance with appropriate technical publication except for the interior ferrous components which will be semigloss white with a color range between 27875 and 27778.
2. Lighter amphibious resupply cargo (LARC) V and XV.	Will not be painted except as may be determined necessary by the operating command.
MARKINGS	
(Markings may be adhesive backed markers or paint conforming to color requirements).	
3. Unit identification	Lusterless black 37038.

3-17. Patterns. Refer to figures 3-6 through 3-43 for applicable patterns on TROSCOM EQUIPMENT.

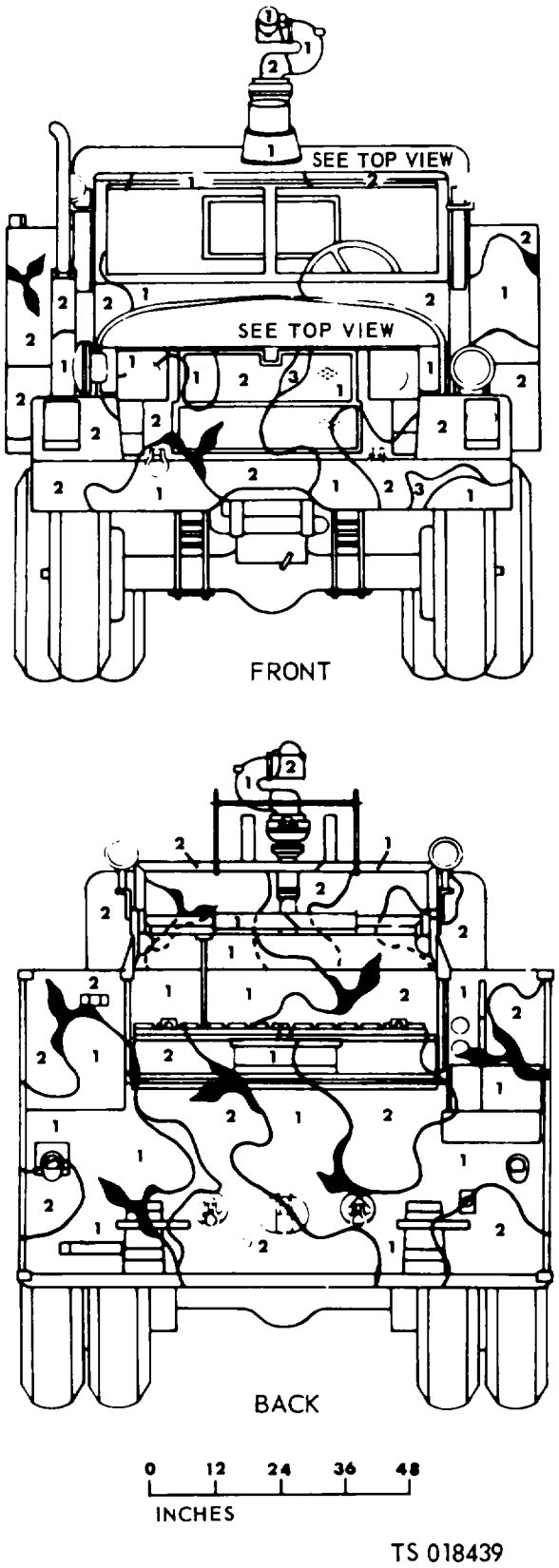

Figure 3-6. M530C firetruck (sheet 1 of 4).

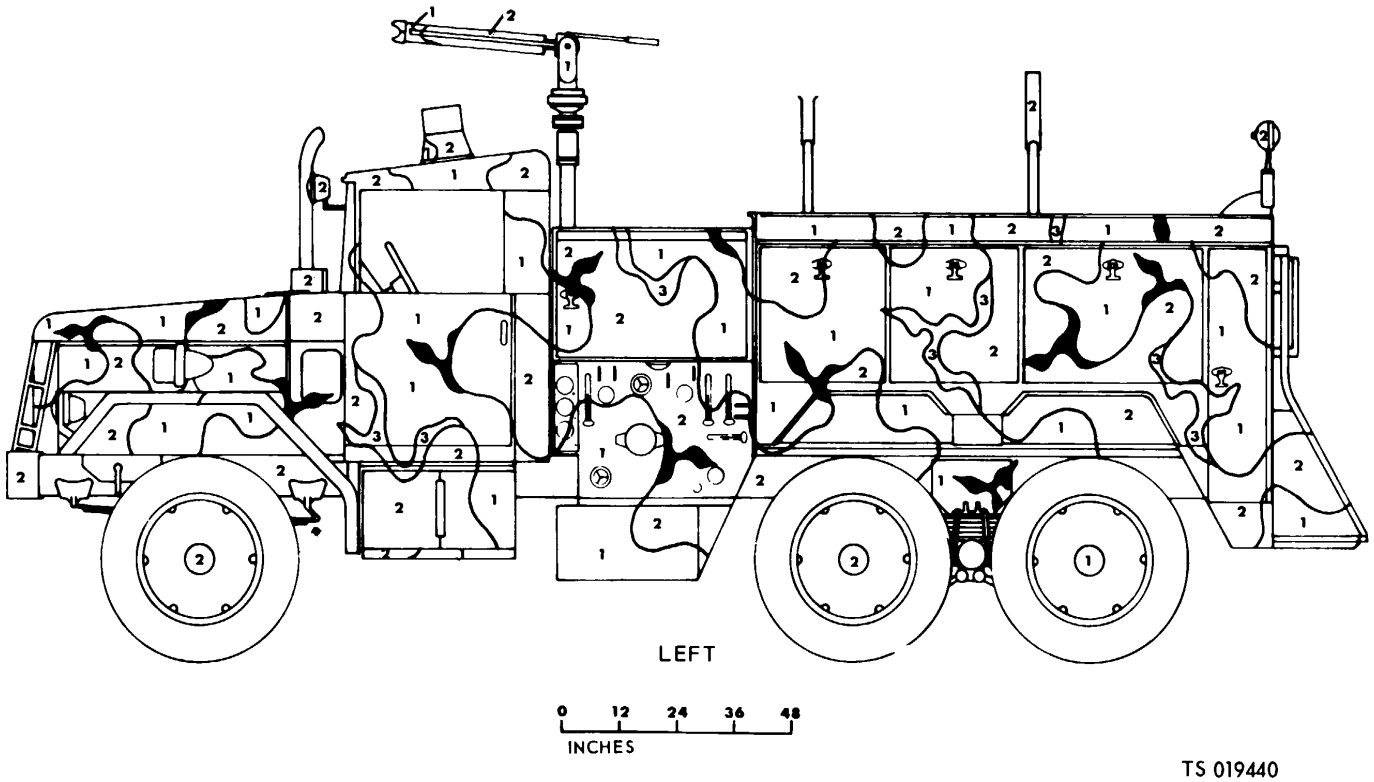

Figure 3-6. M530C firetruck (sheet 2 of 4).

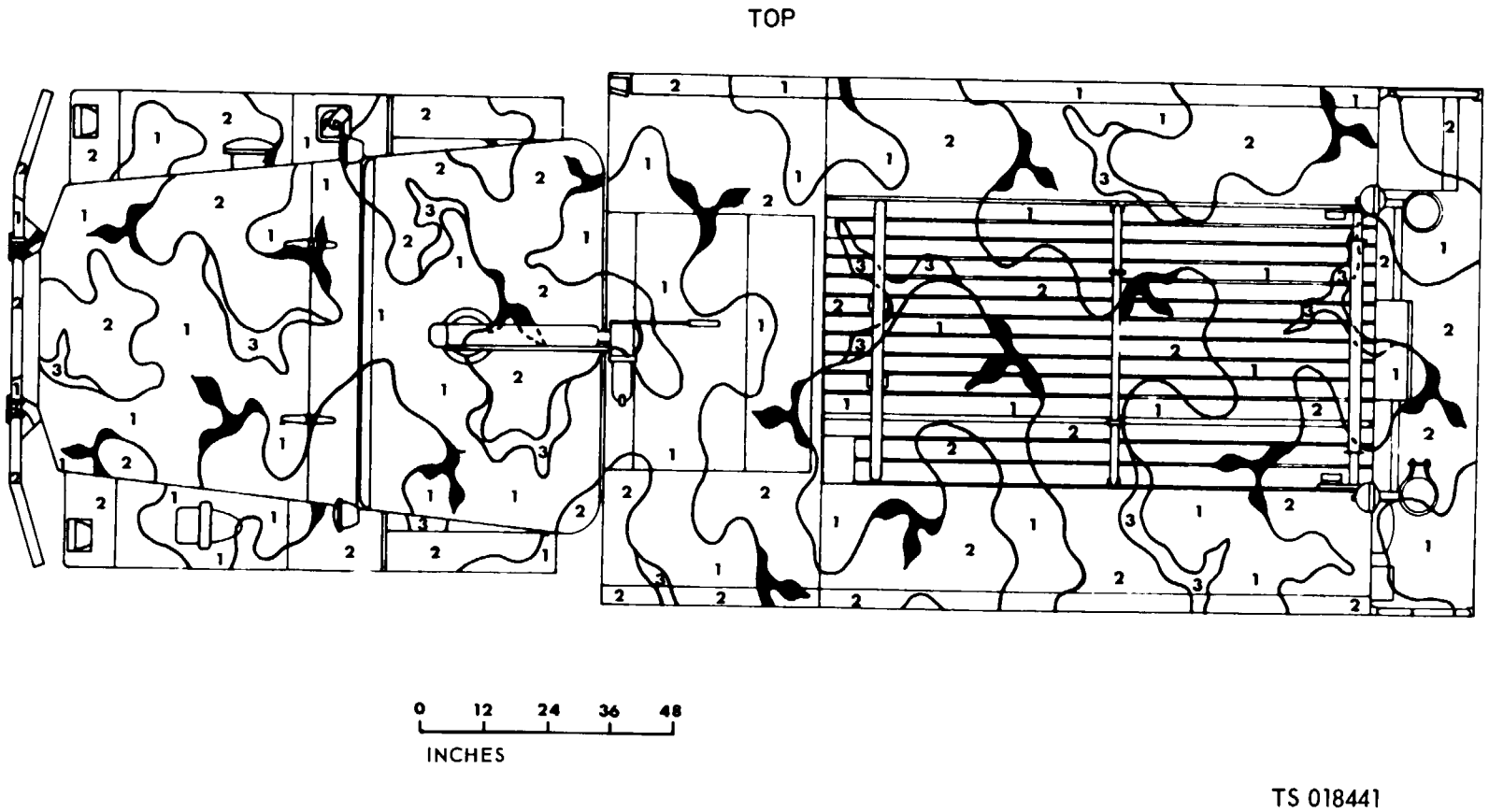

Figure 3-6. M530C firetruck (sheet 3 of 4).

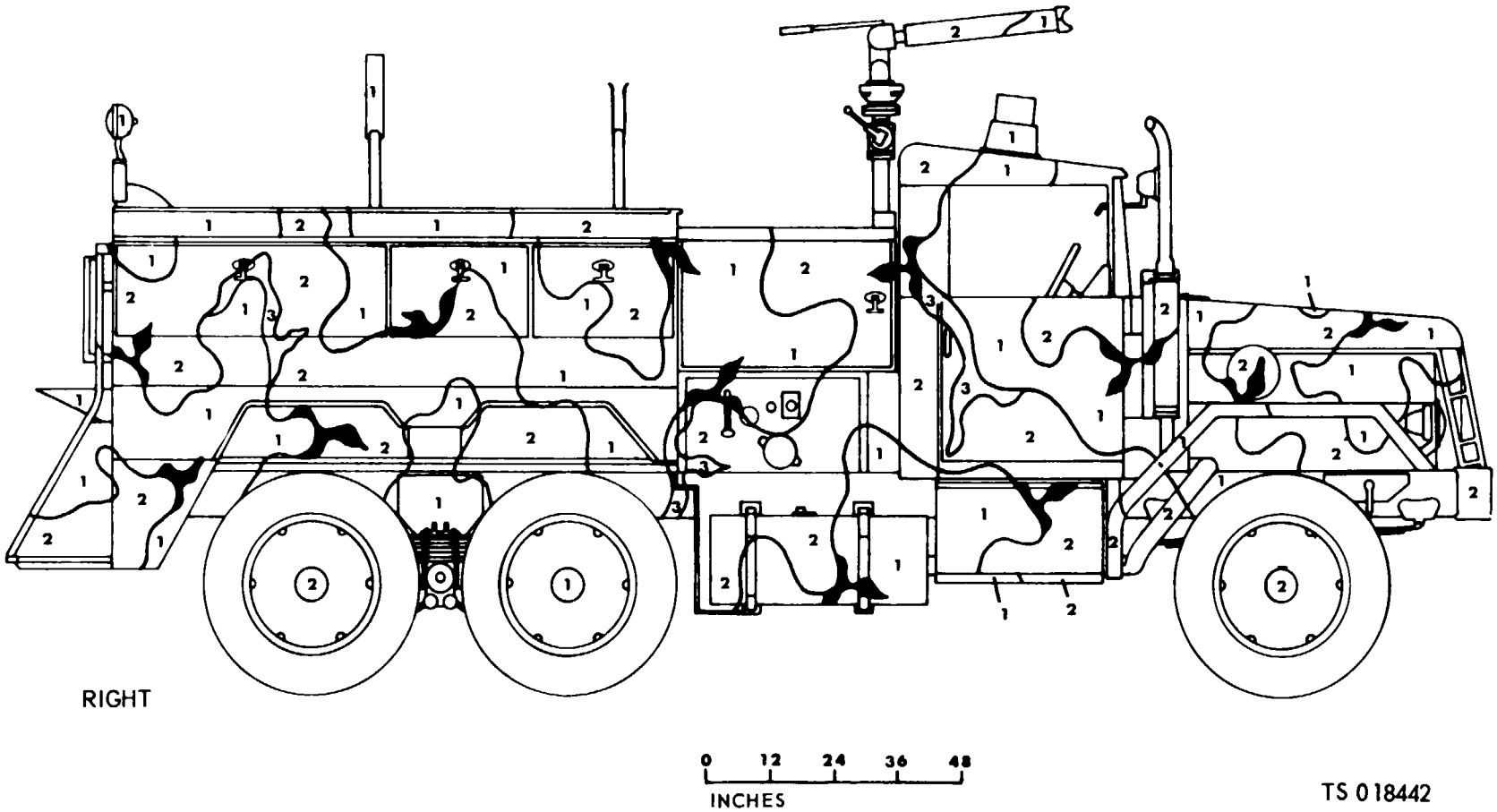

Figure 3-6. M530C firetruck (sheet 4 of 4).

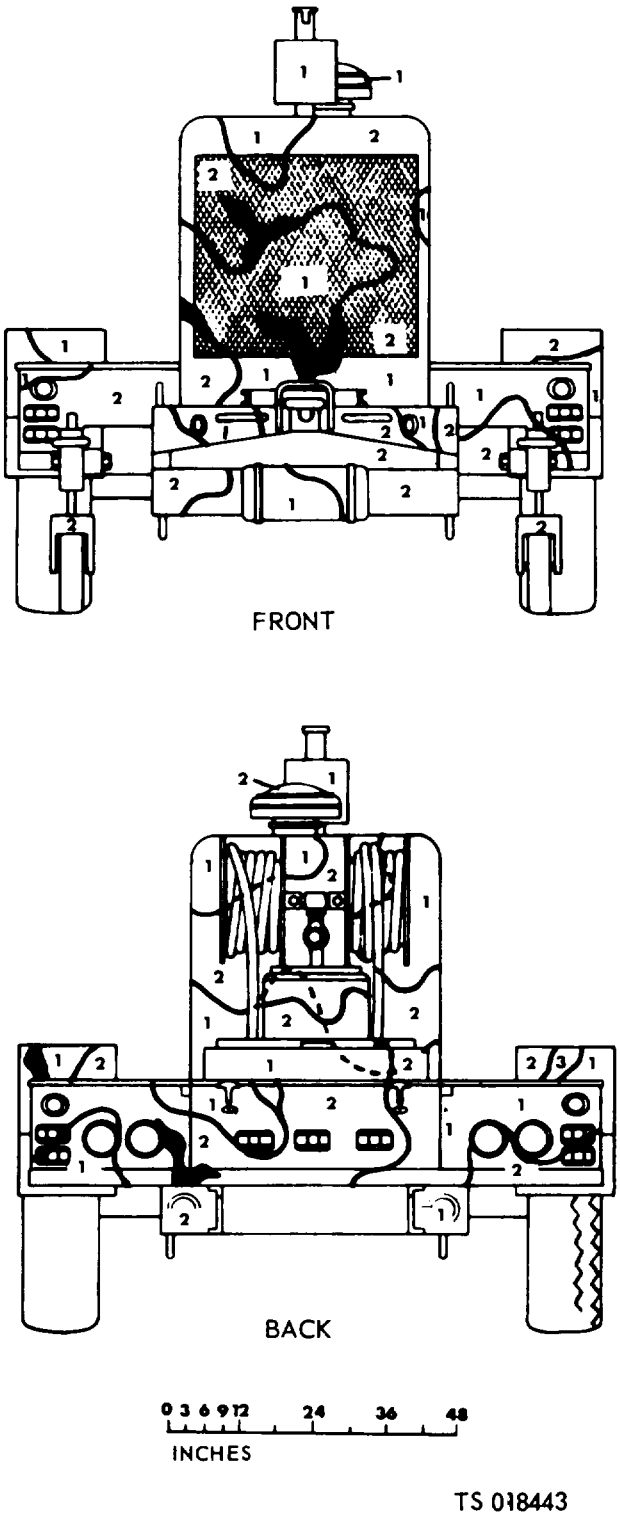

Figure 3-7. 250 CFM compressor (sheet 1 of 4).

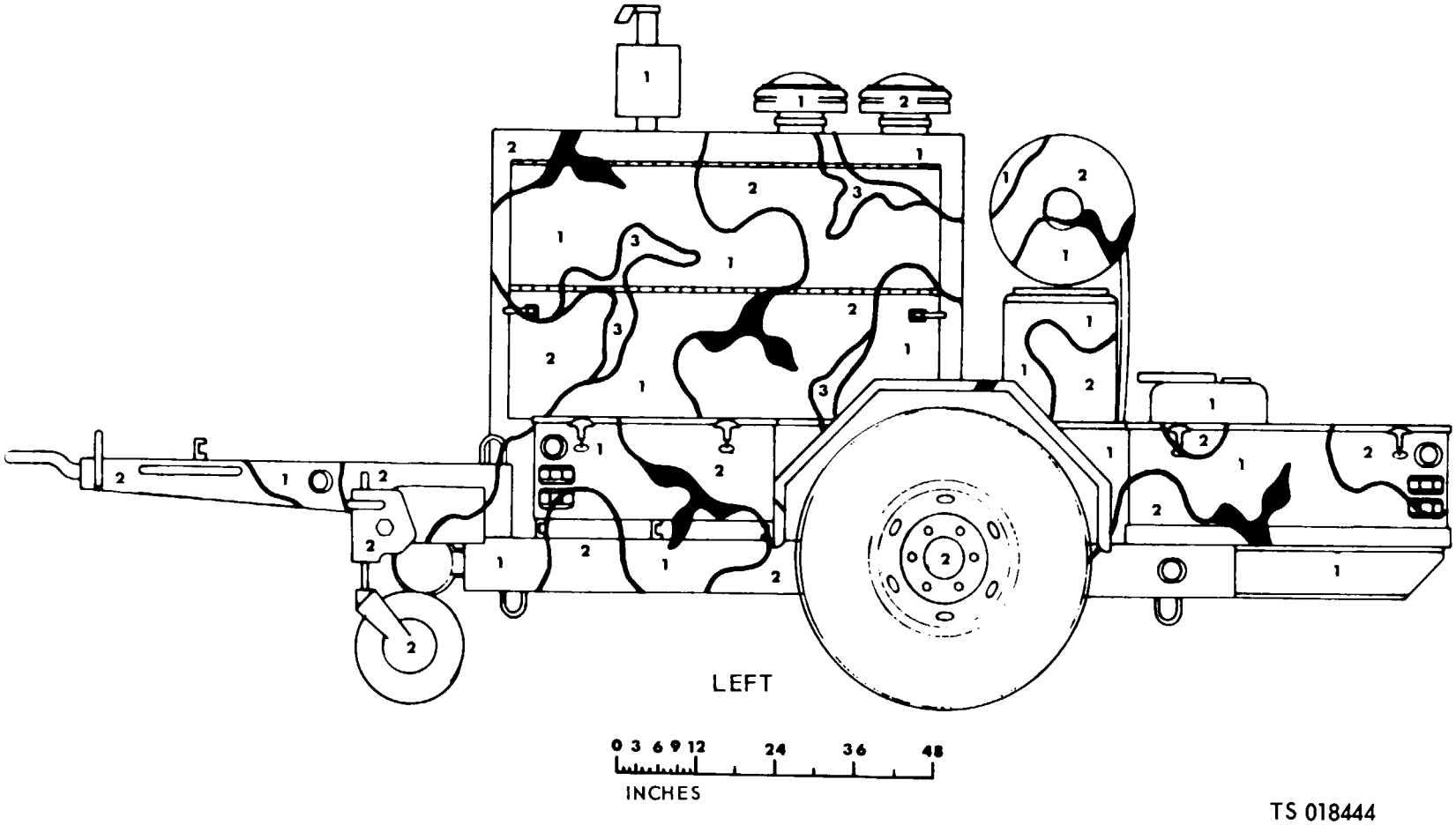

Figure 3-7. 250 CFM compressor (sheet 2 of 4).

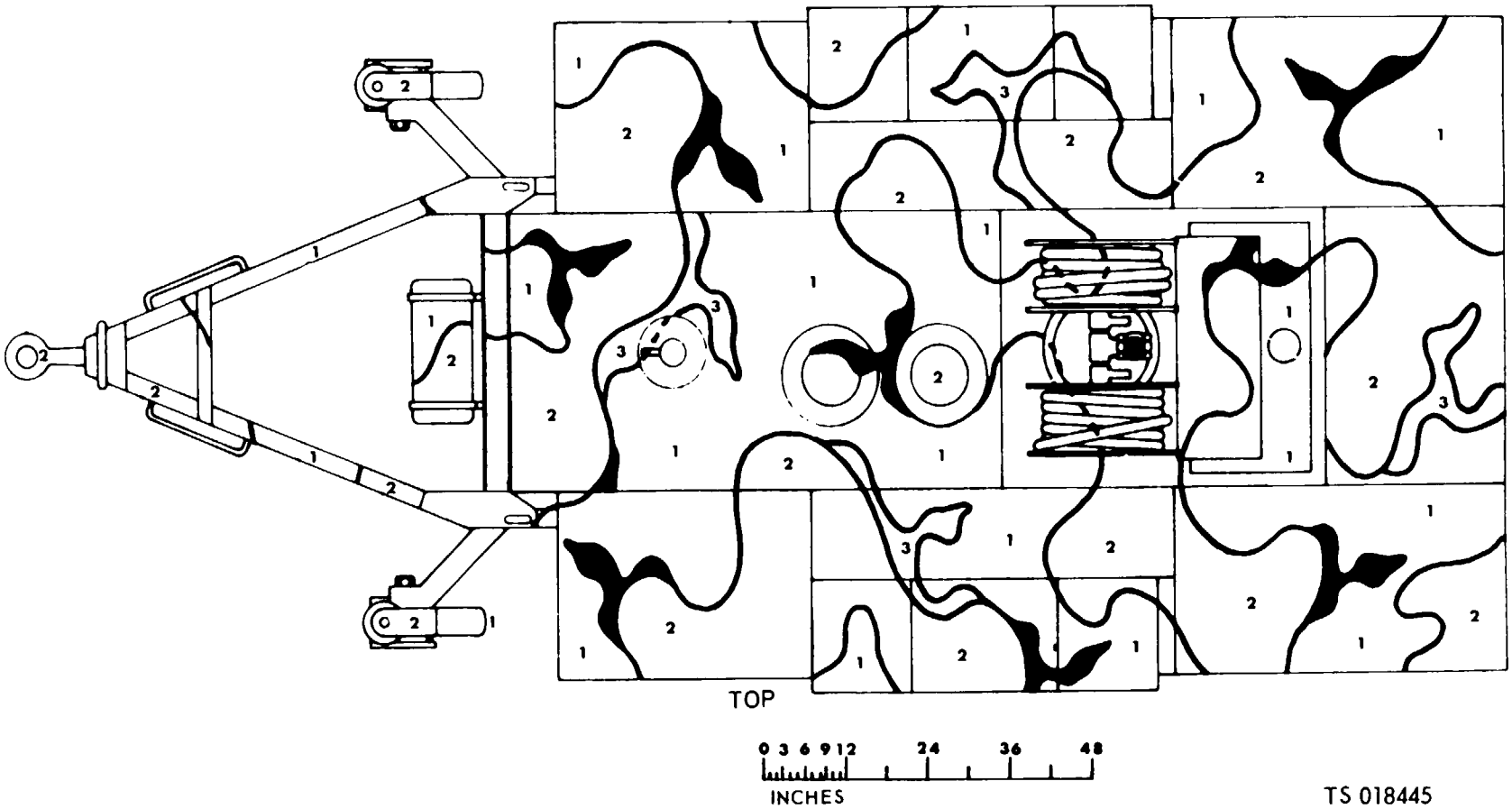

Figure 3-7. 250 CFM compressor (sheet 3 of 4).

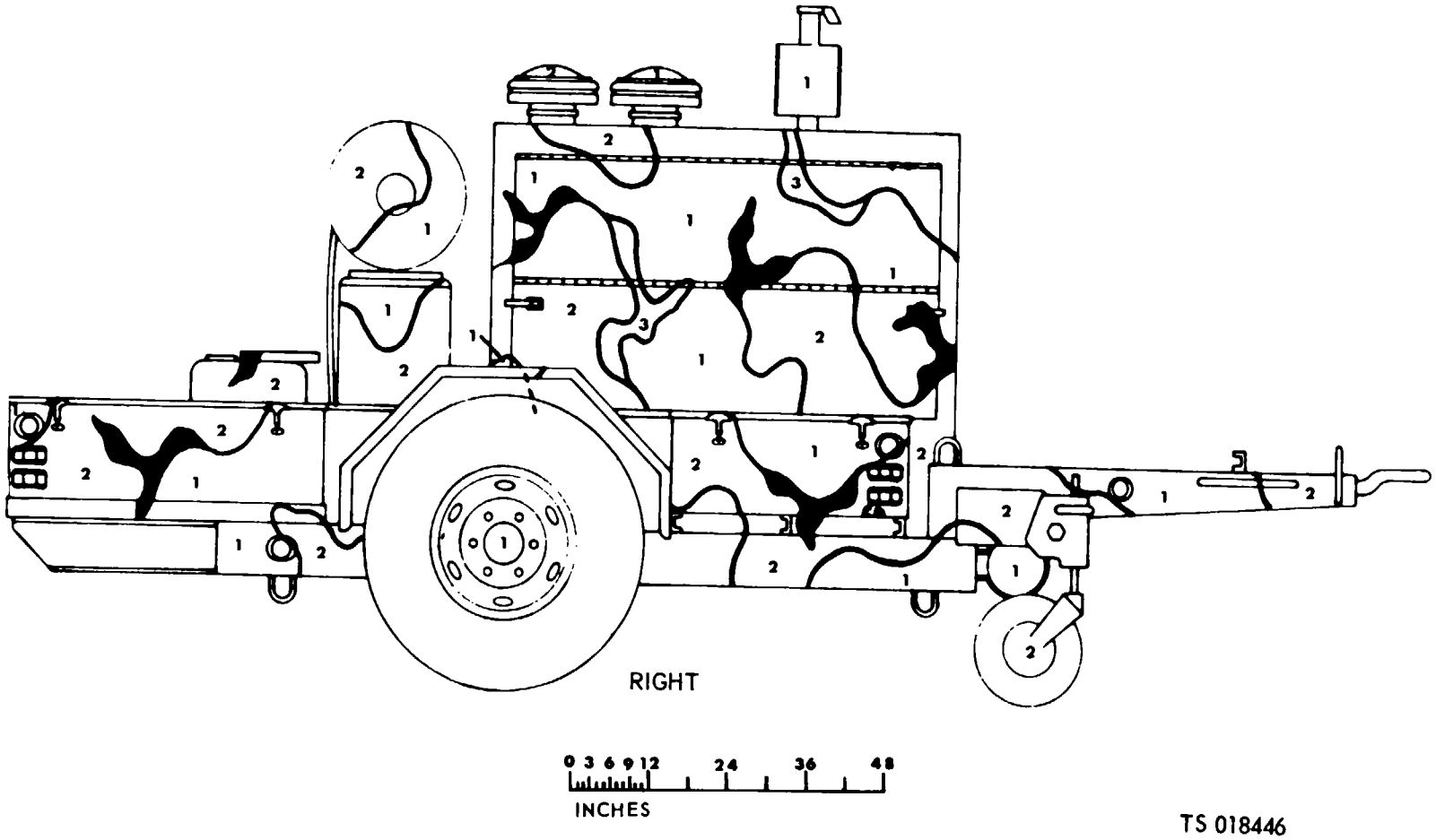

Figure 3-7. 250 CFM compressor (sheet 4 of 4).

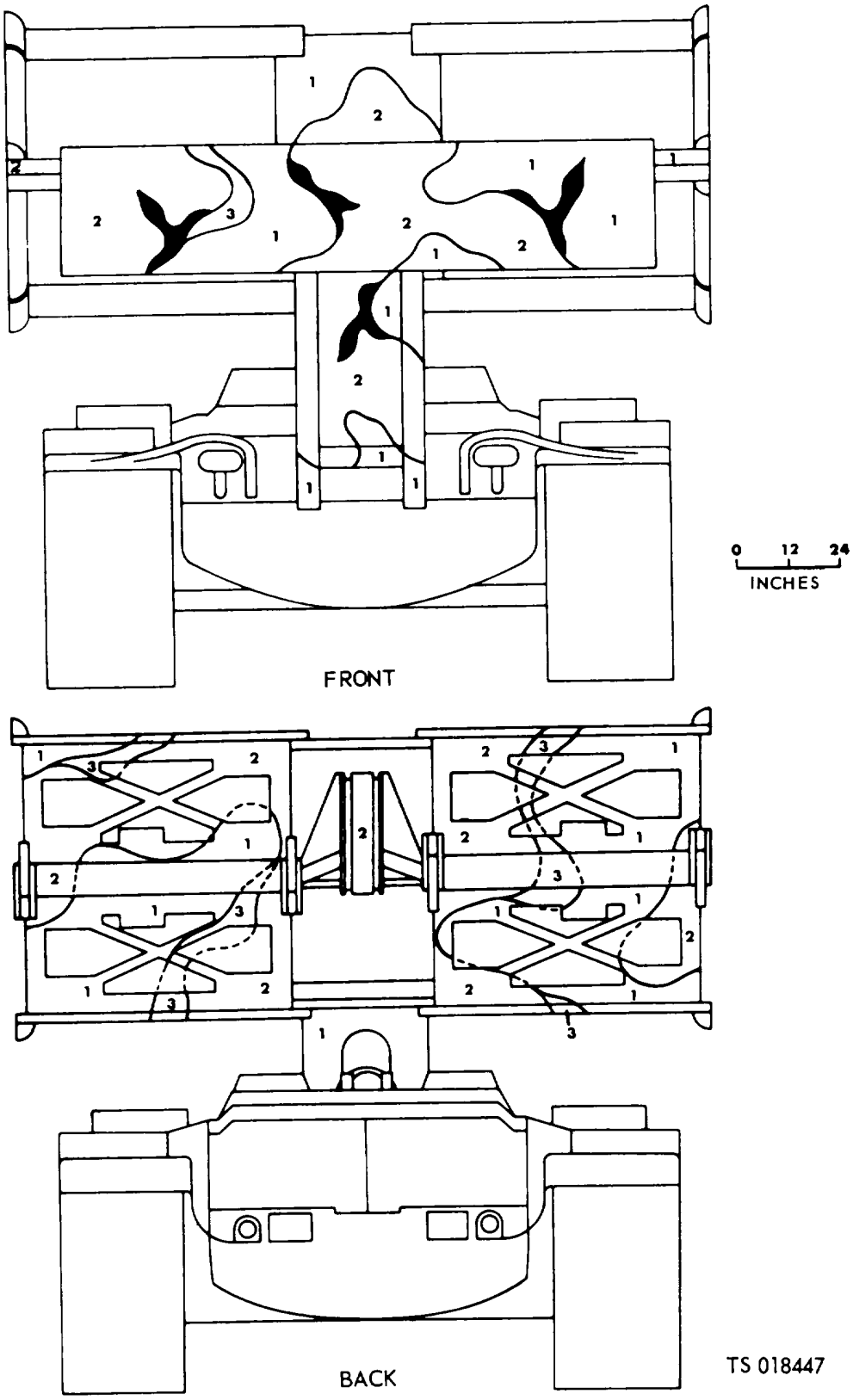

Figure 3-8. M48A2 AVLB (sheet 1 of 5).

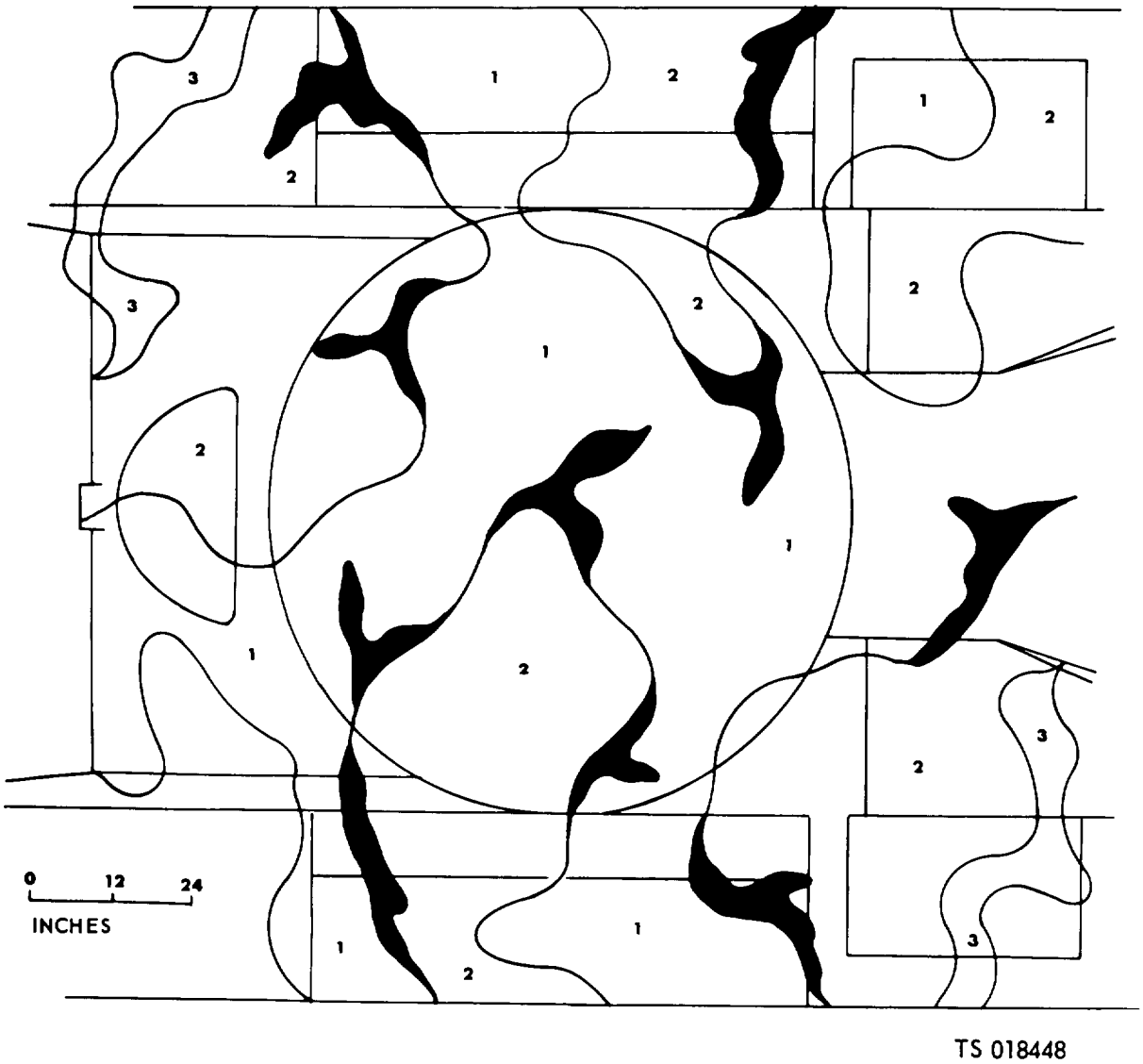

Figure 3-8. M48A2 AVLB (sheet 2 of 5).

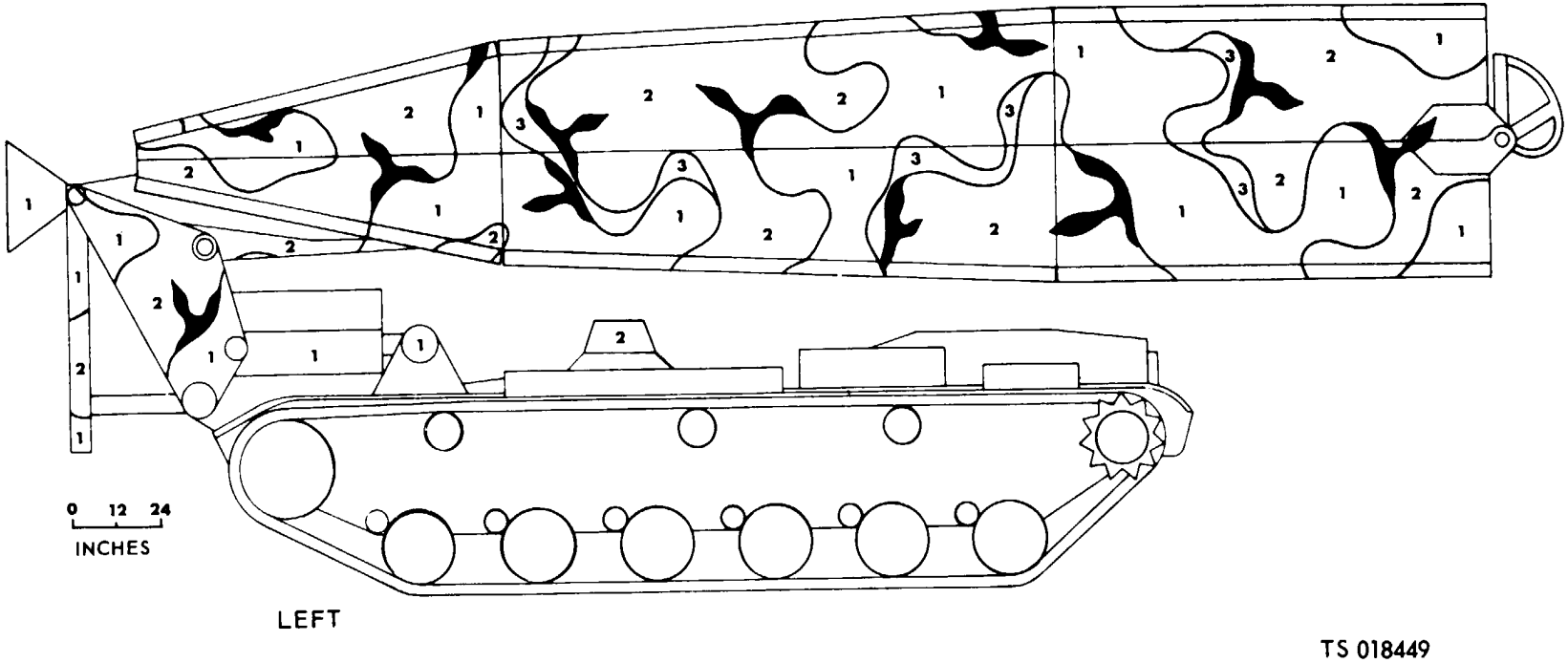

Figure 3-8. M48A2 AVLB (sheet 3 of 5).

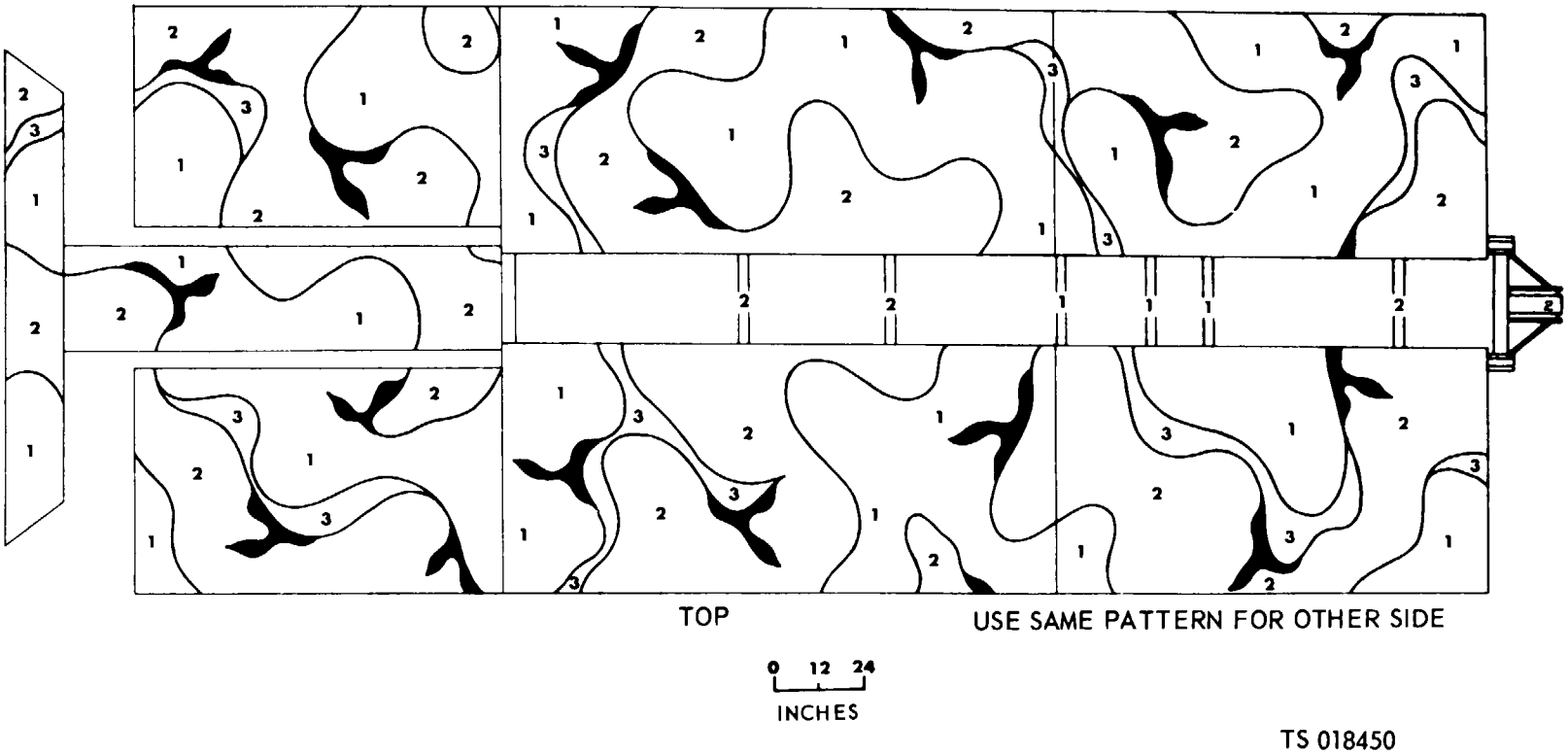

Figure 3-8. M48A2 AVLB (sheet 4 of 5).

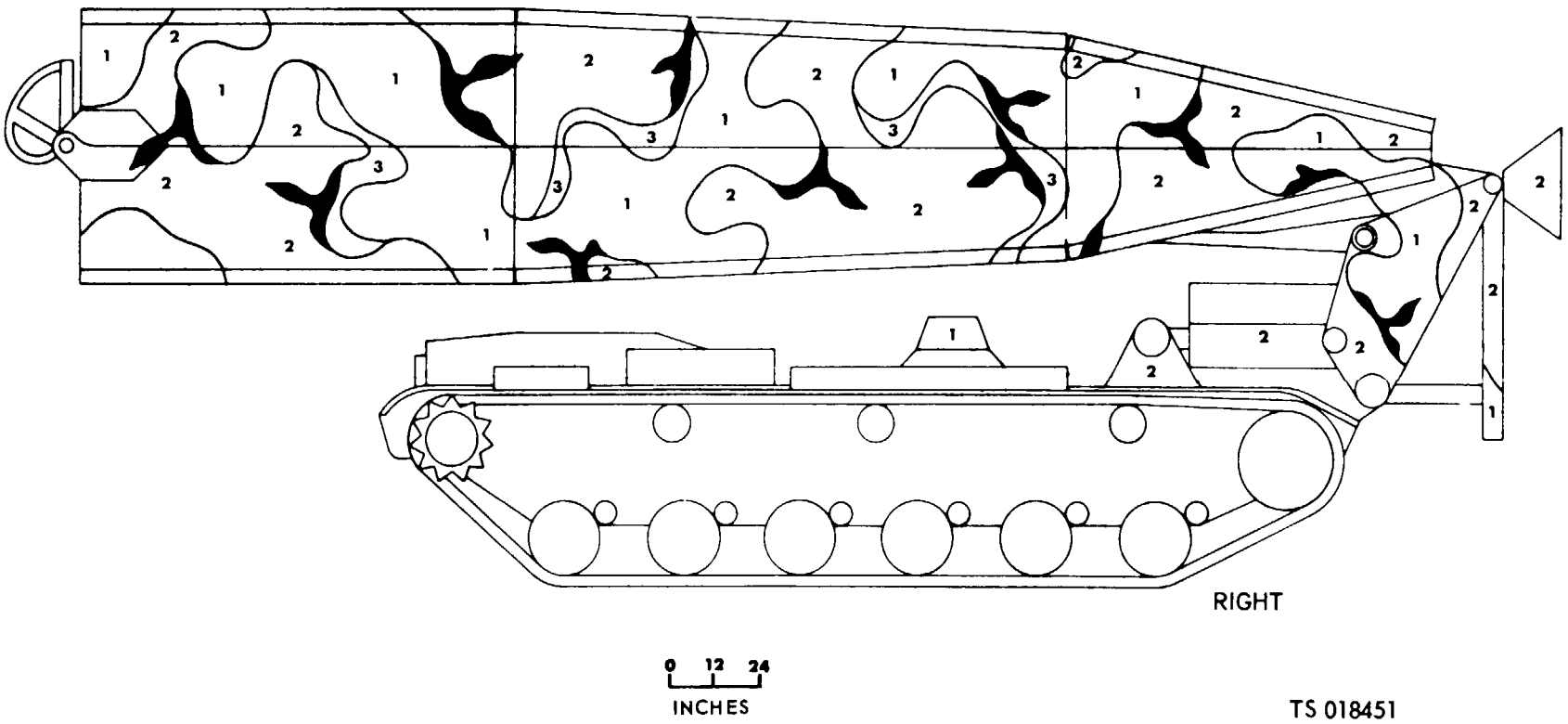

Figure 3-8. M48A2 AVLB (sheet 5 of 5).

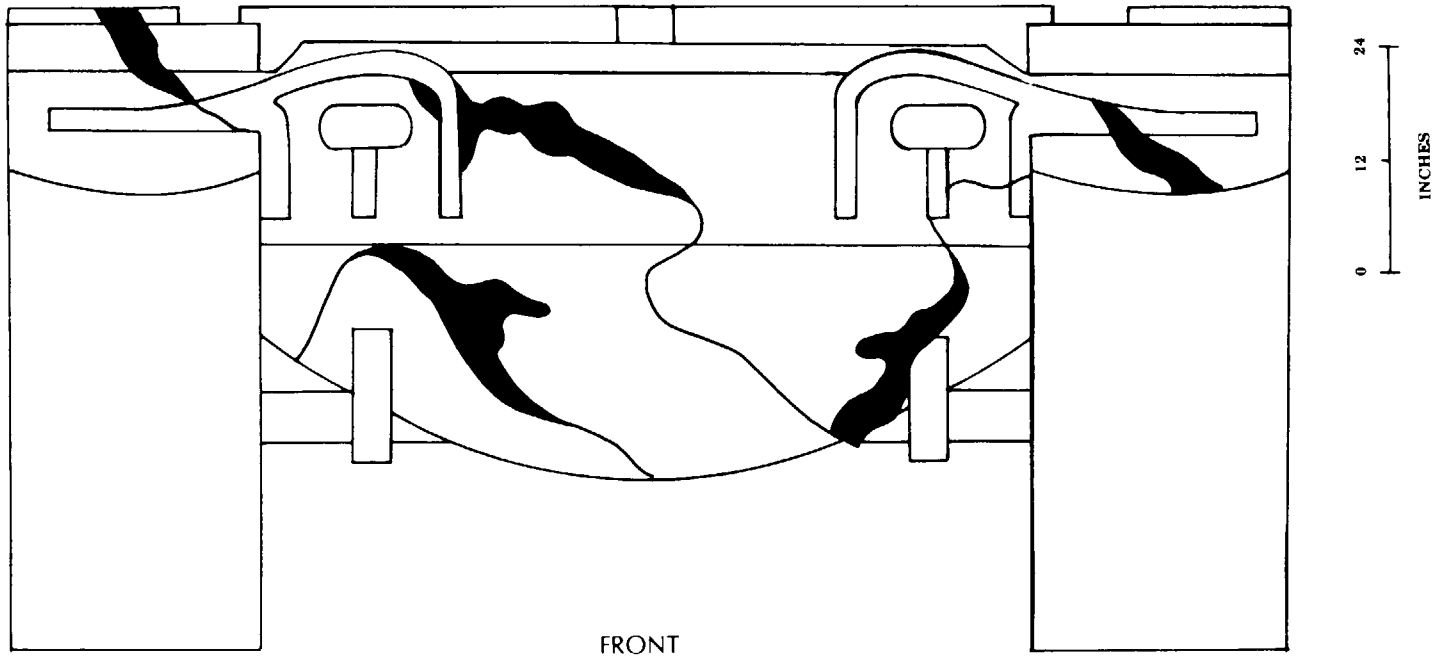

TS 018452/C1

Figure 3-9. M418 and M60 tank hull (sheet 1 of 5).

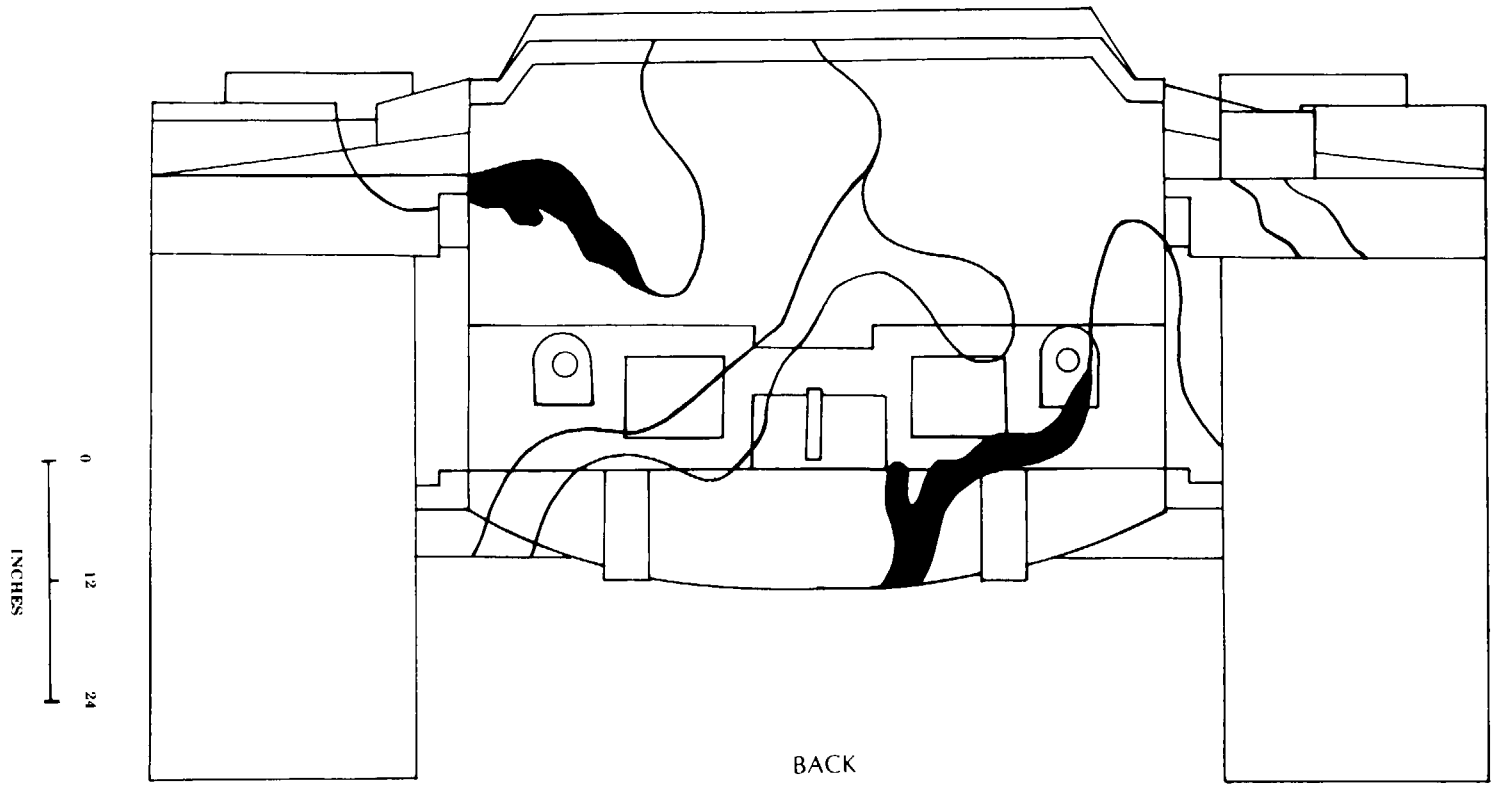

TS 018453/C1

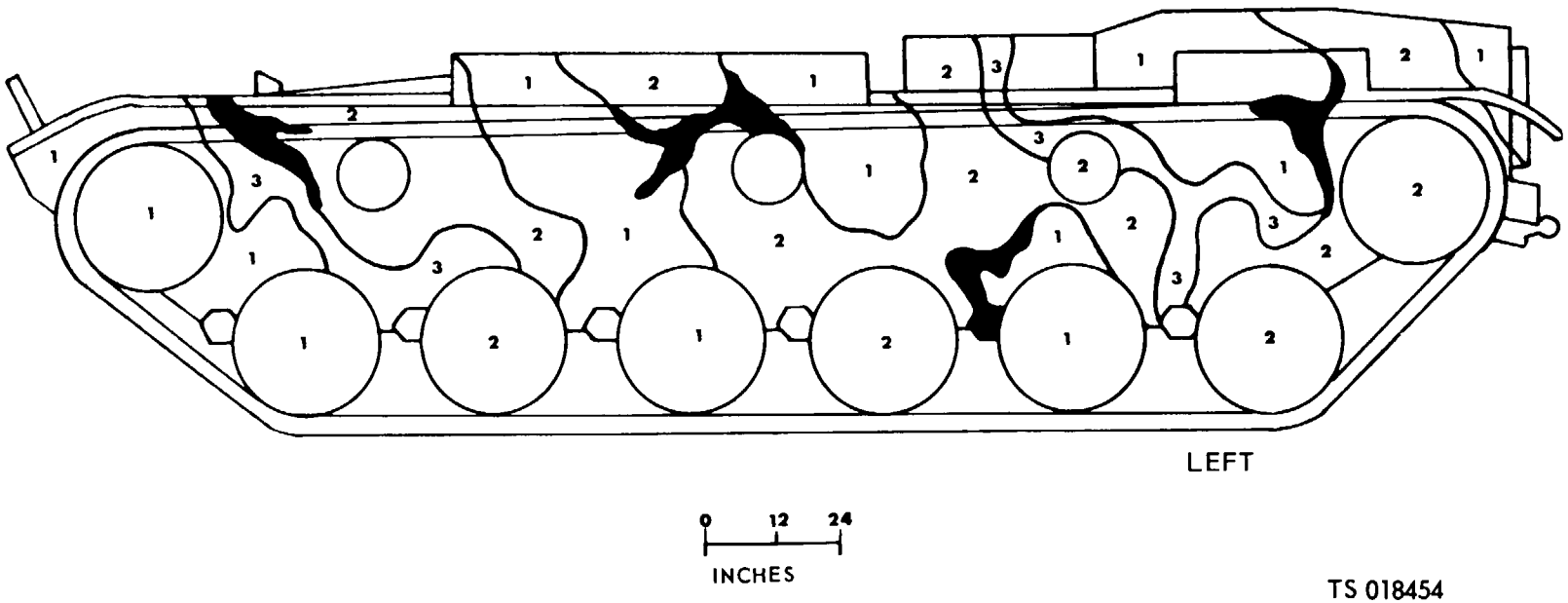

Figure 3-9. M60 tank, 105MM, hull (sheet 3 of 5).

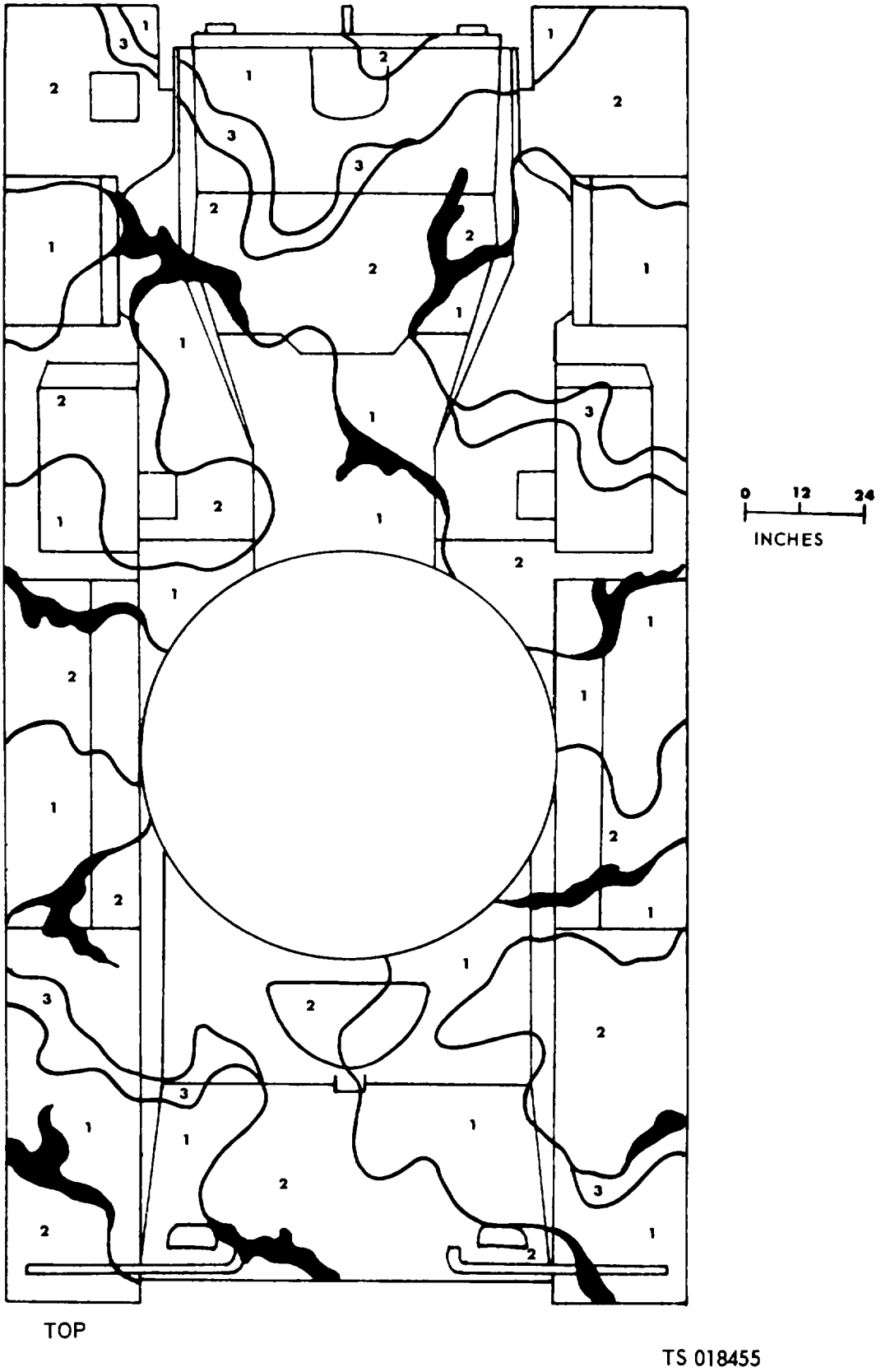

Figure 3-9. M60 tank. 105MM, hull (sheet 4 of 5).

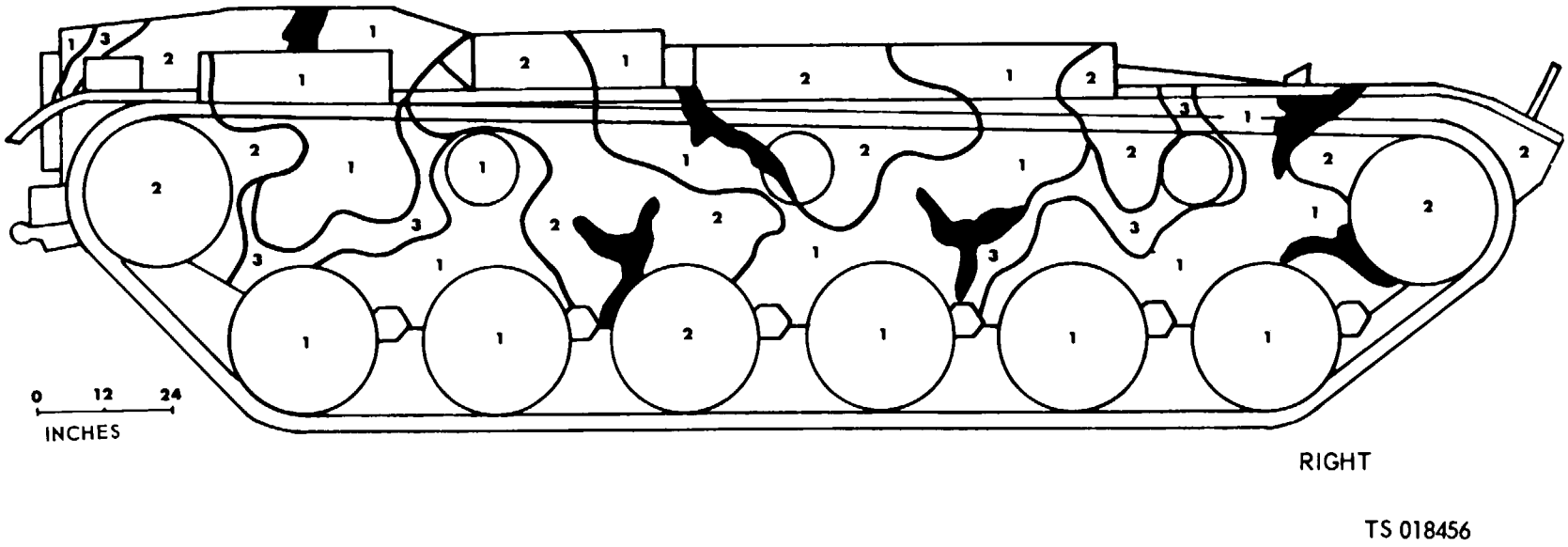

Figure 3-9. M60 tank, 105MM, hull (sheet 5 of 5).

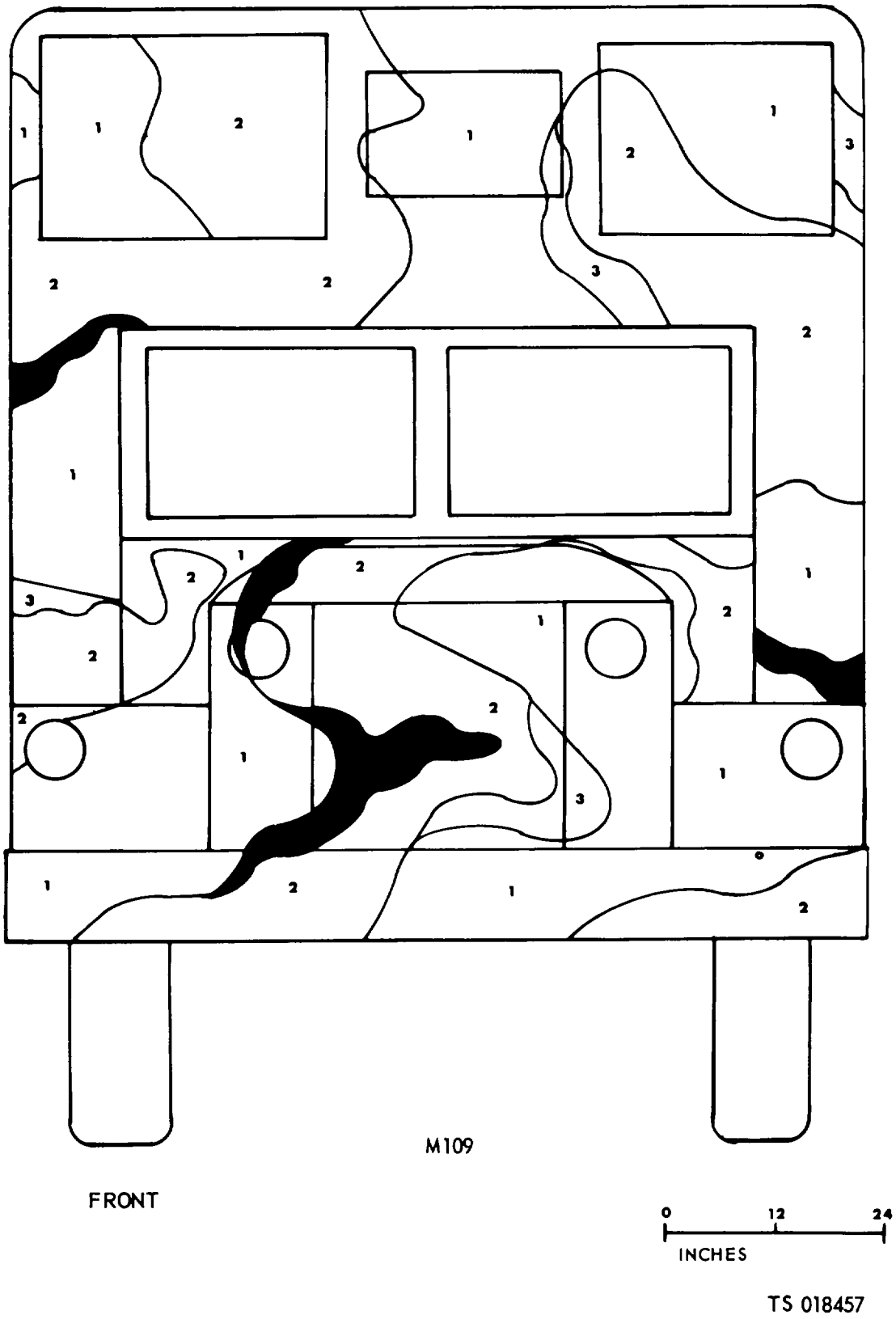

Figure 3-10. 2-1/2T Van (M185 instrument shop) (sheet 1 of 5).

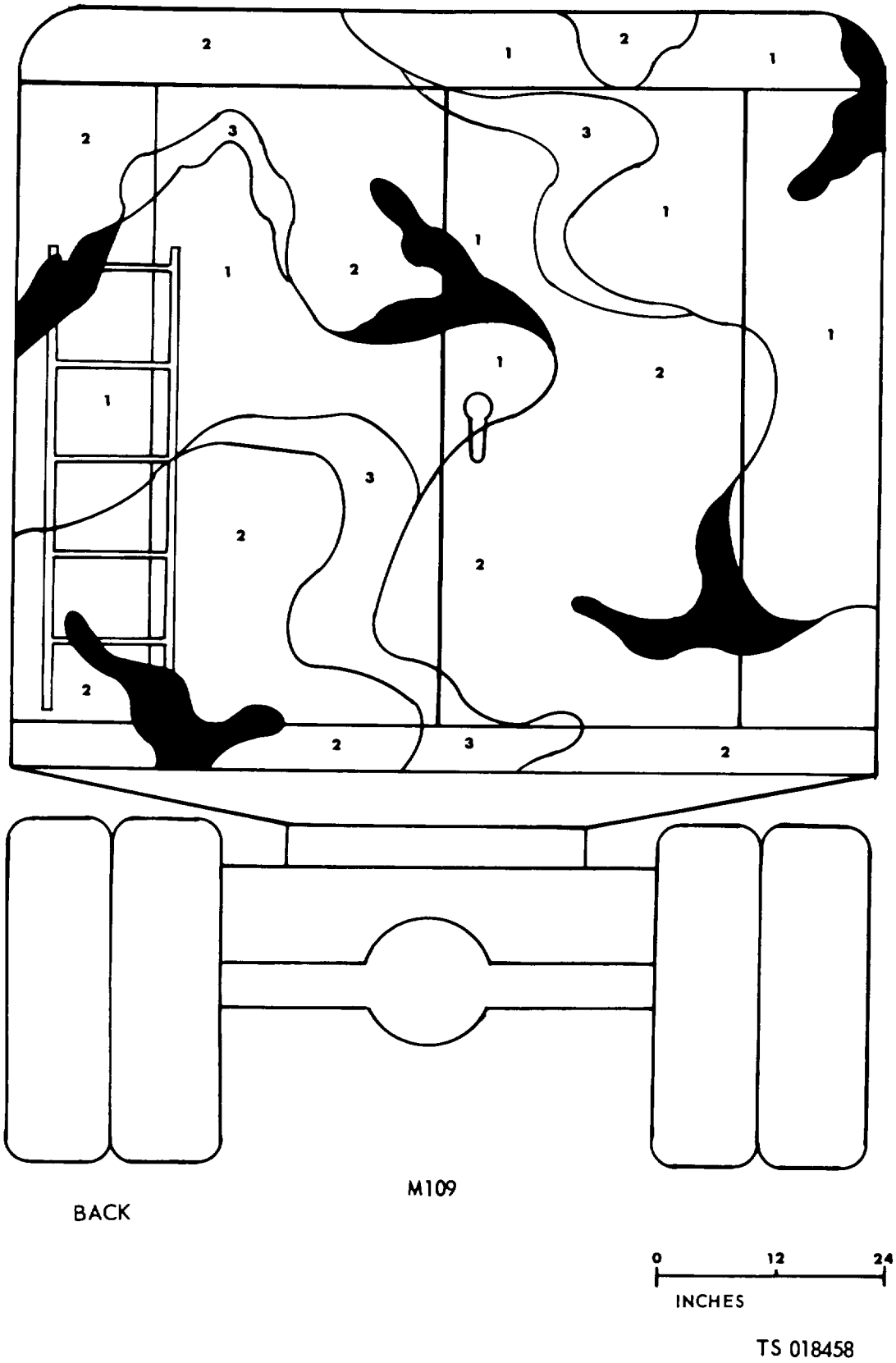

Figure 3-10. 2-1/2T Van (M185 instrument shop) (sheet 2 of 5).

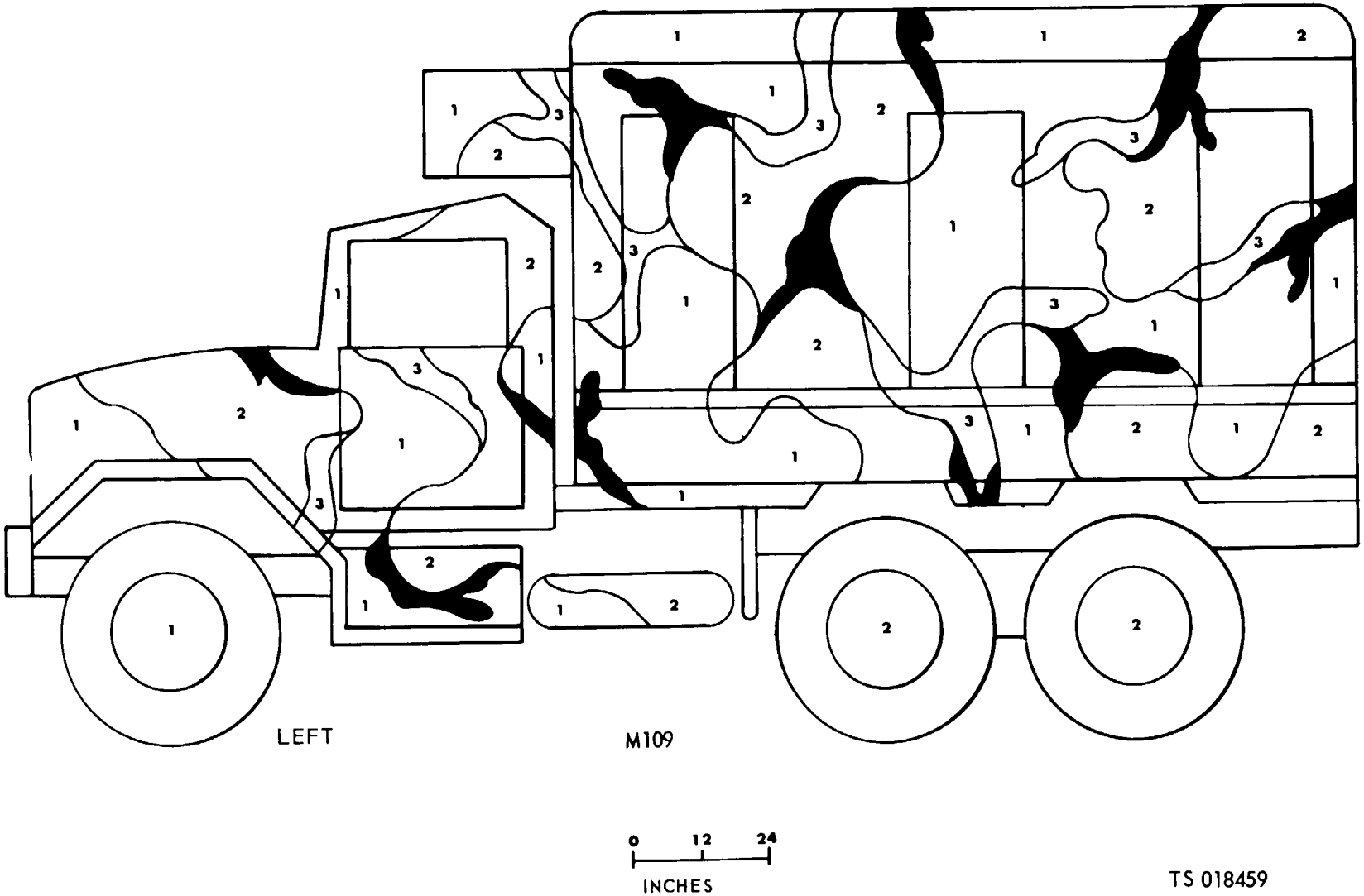

Figure 3-10. 2-1/2T Van, (M185 instrument shop) (sheet 3 of 5).

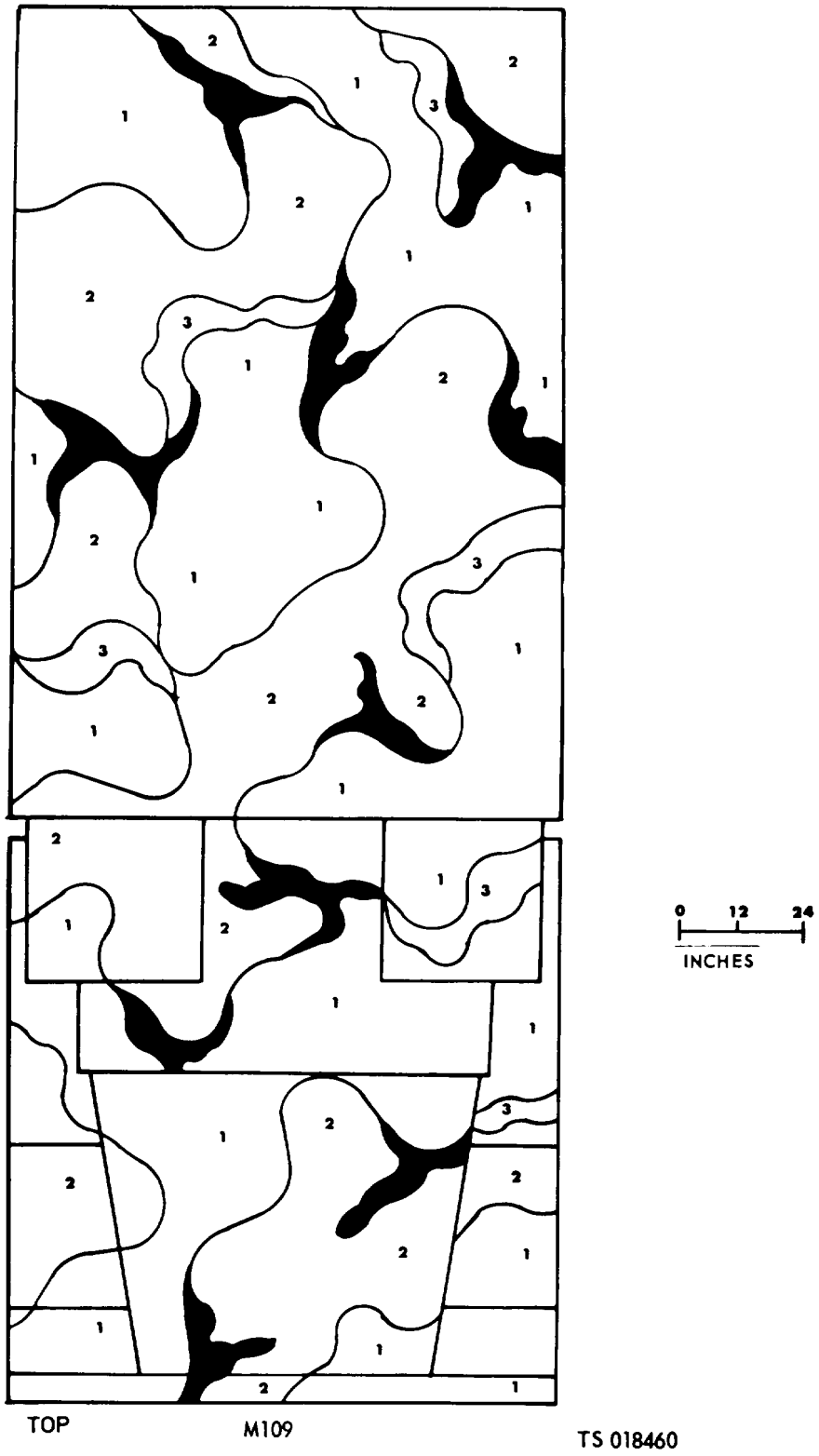

Figure 3-10. 2-1/2T Van (M185 instrument shop) (sheet 4 of 5).

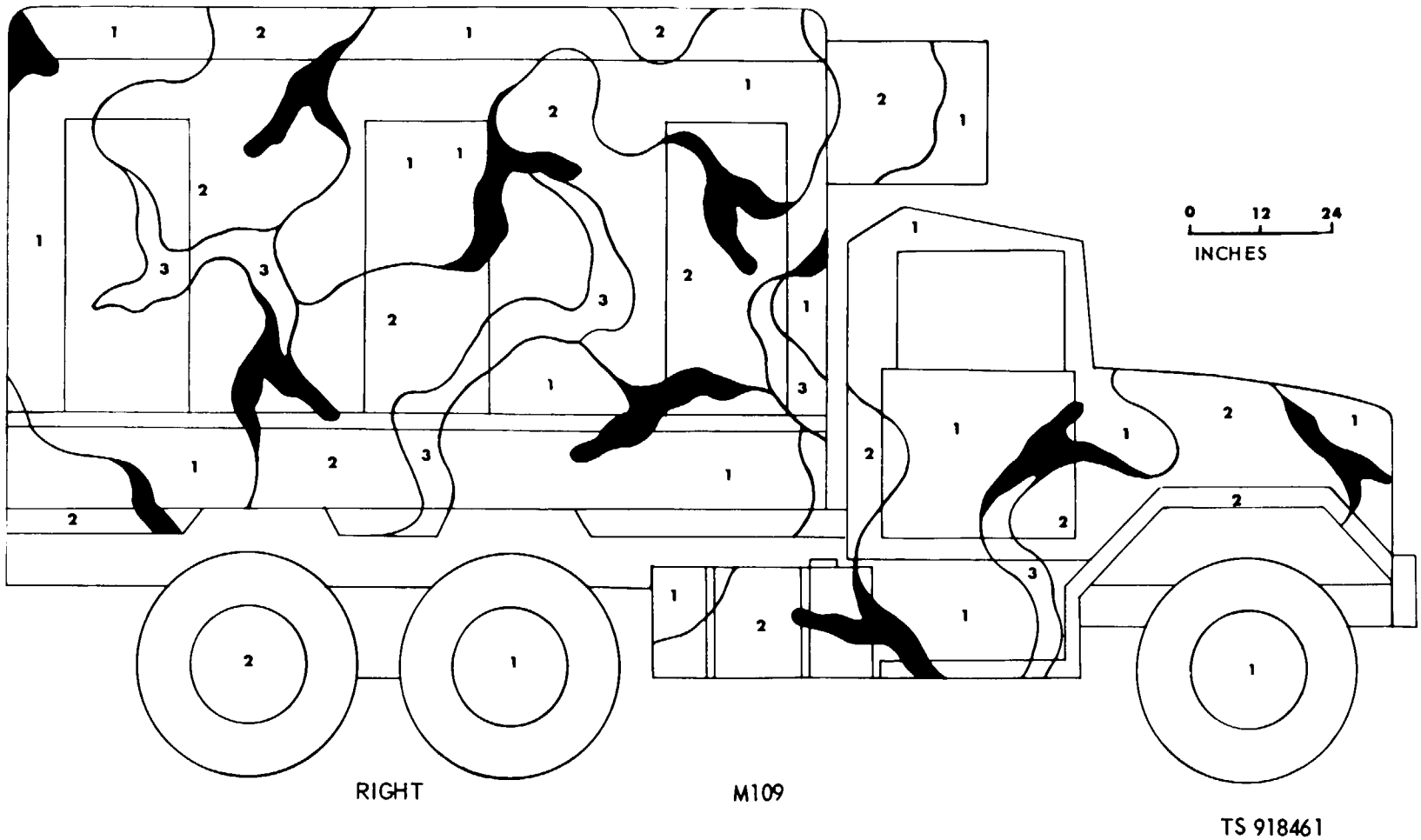

Figure 3-10. 2-1/2T Van (M185 instrument shop) (sheet 5 of 5}.

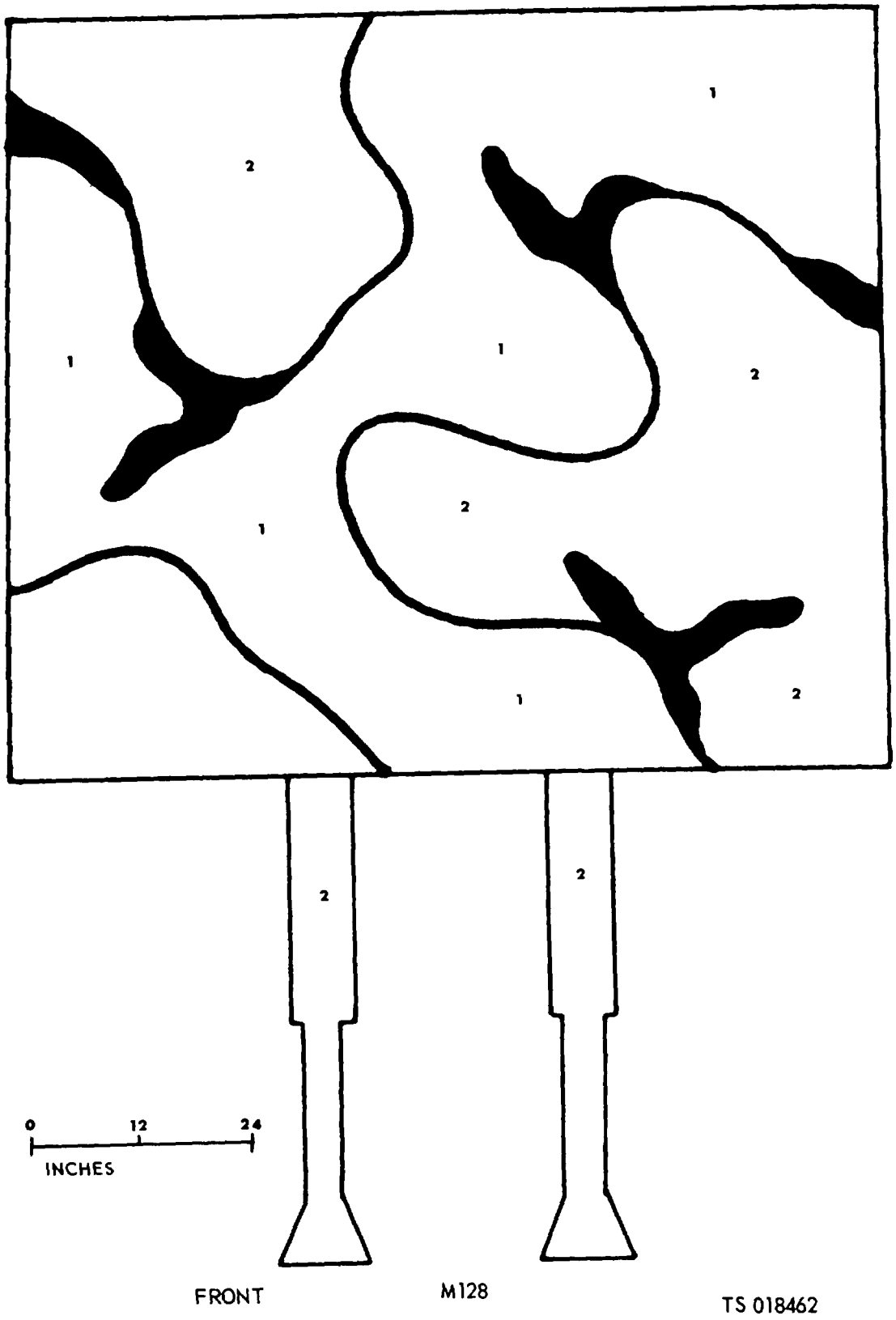

Figure 3-11. M128 12T semitrailer (also M127A1C) (sheet 1 of 5).

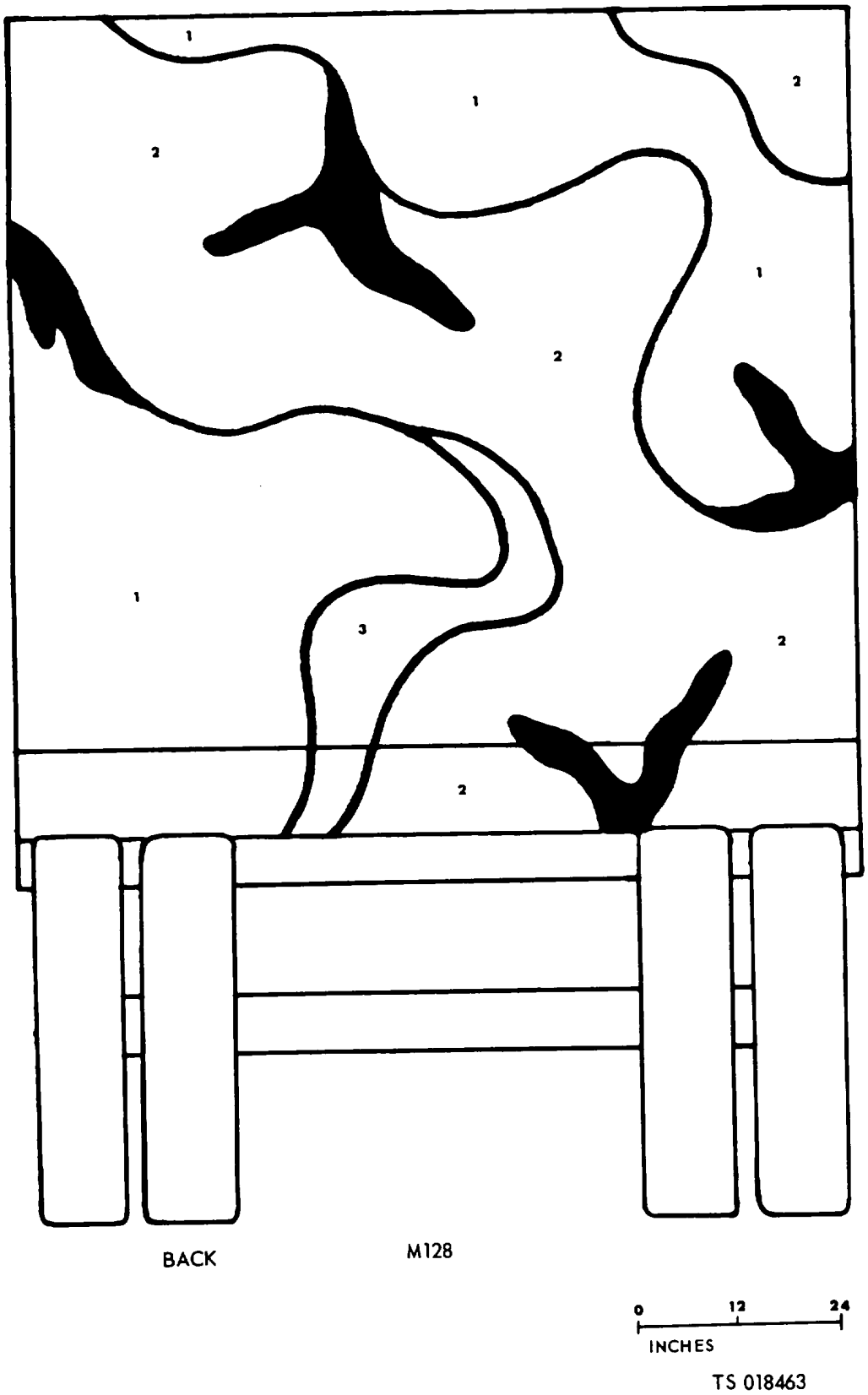

Figure 3-11. M128 12T semitrailer (also M127A1C) (sheet 2 of 5).

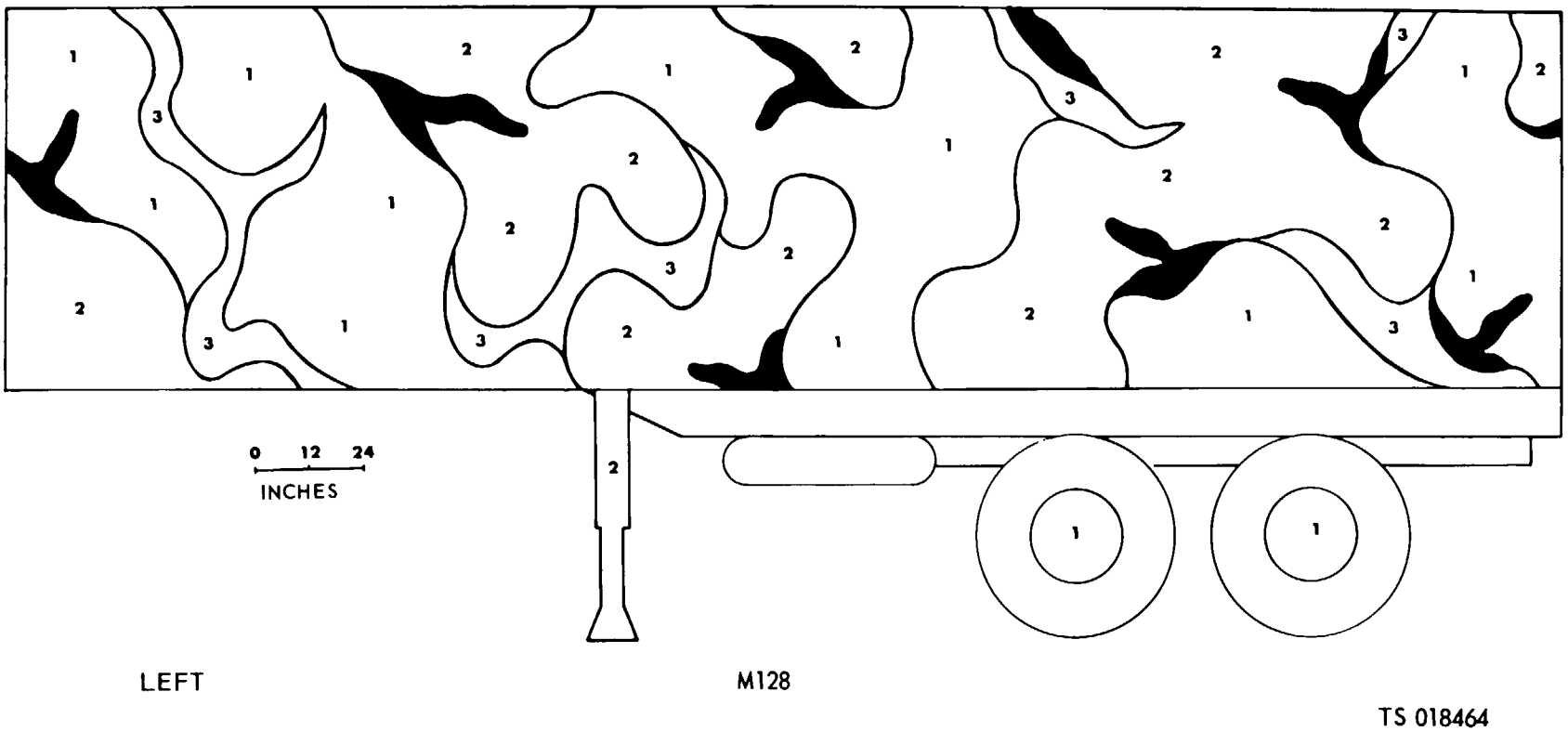

Figure 3-11. M128 12T semitrailer (also M127A1C) (sheet 3 of 5).

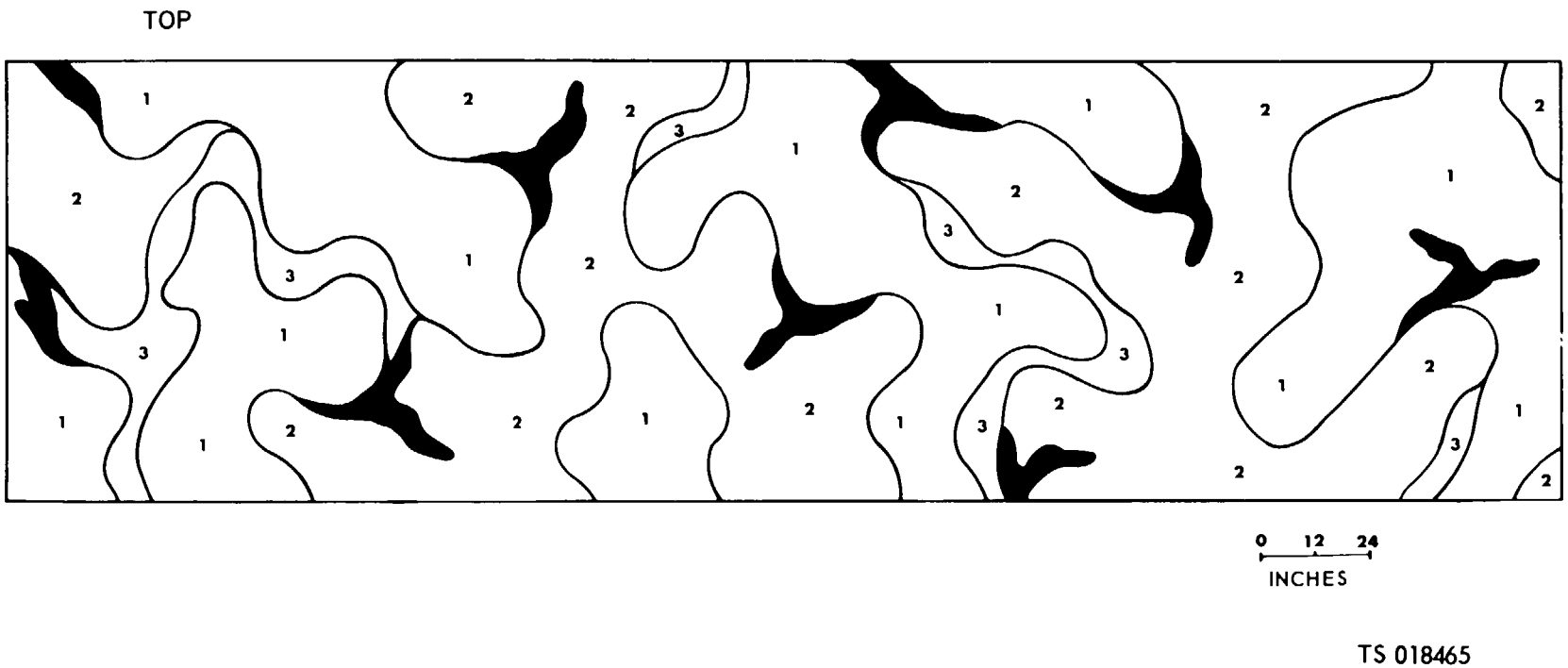

Figure 3-11. M128 12T semitrailer (also M127A1C) (sheet 4 of 5).

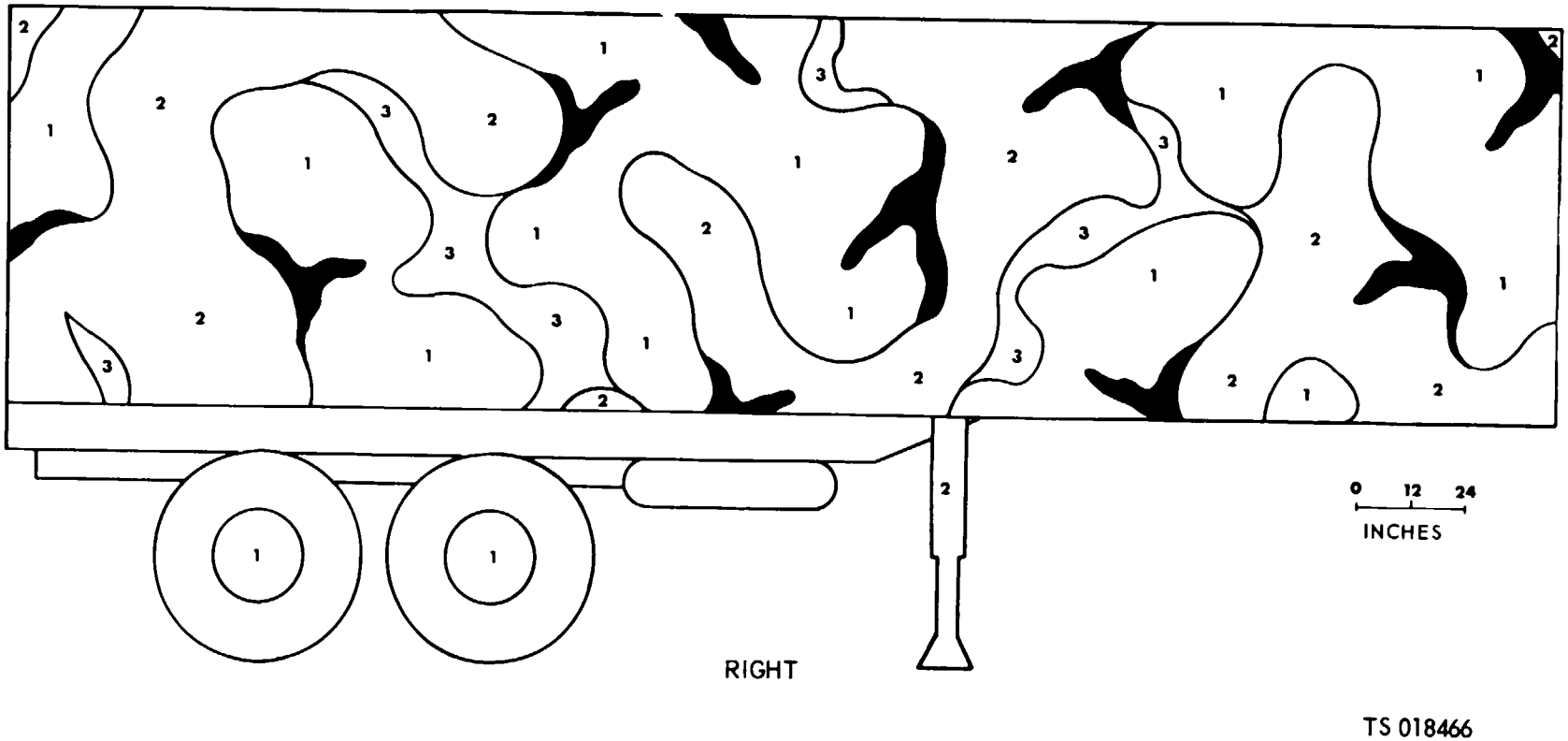

Figure 3-11. M128 12T semitrailer (also M127A1C) (sheet 5 of 5).

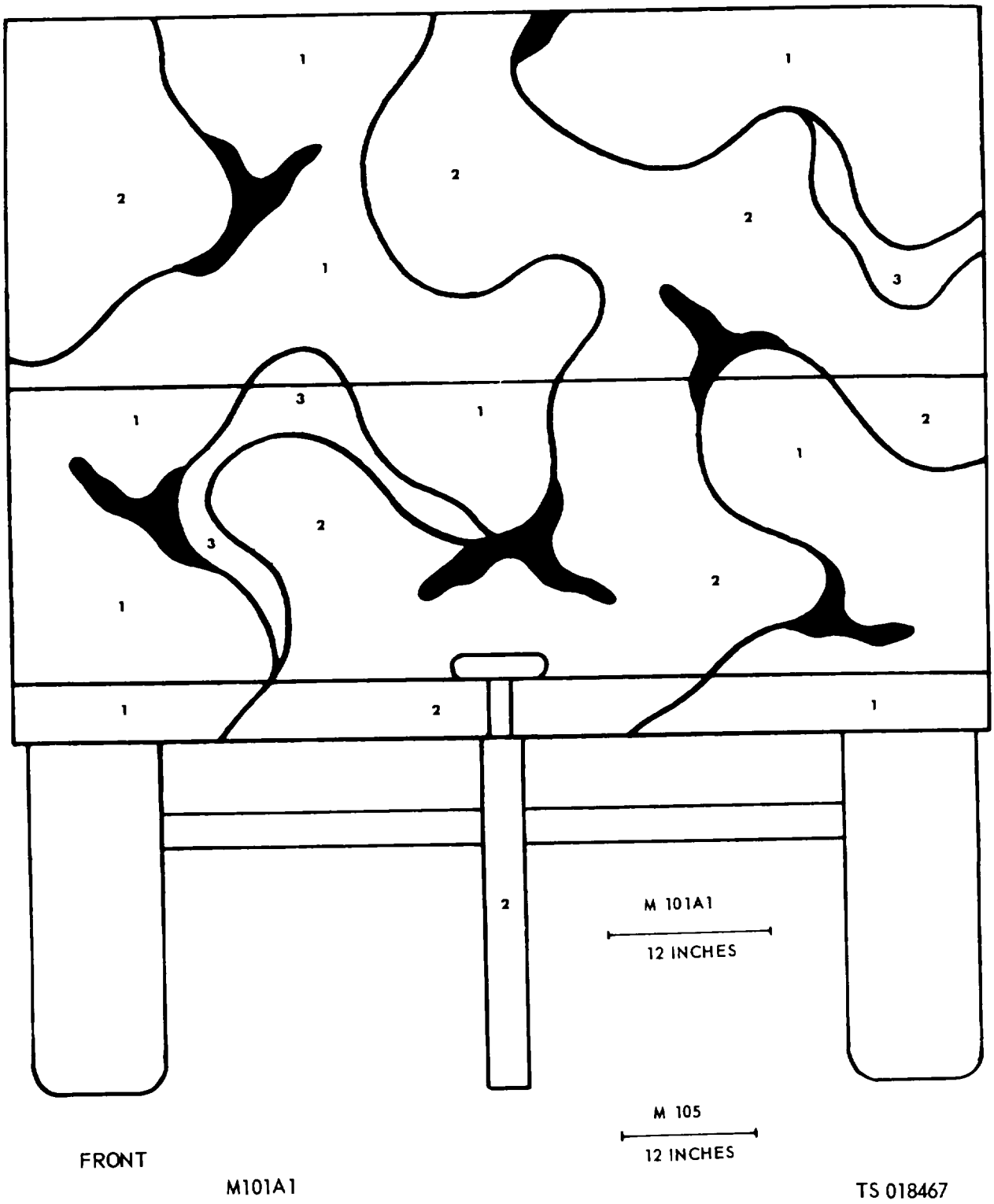

Figure 3-12. M101A1 3/4T trailer (M105-1-1/2T trailer) (sheet 1 of 5).

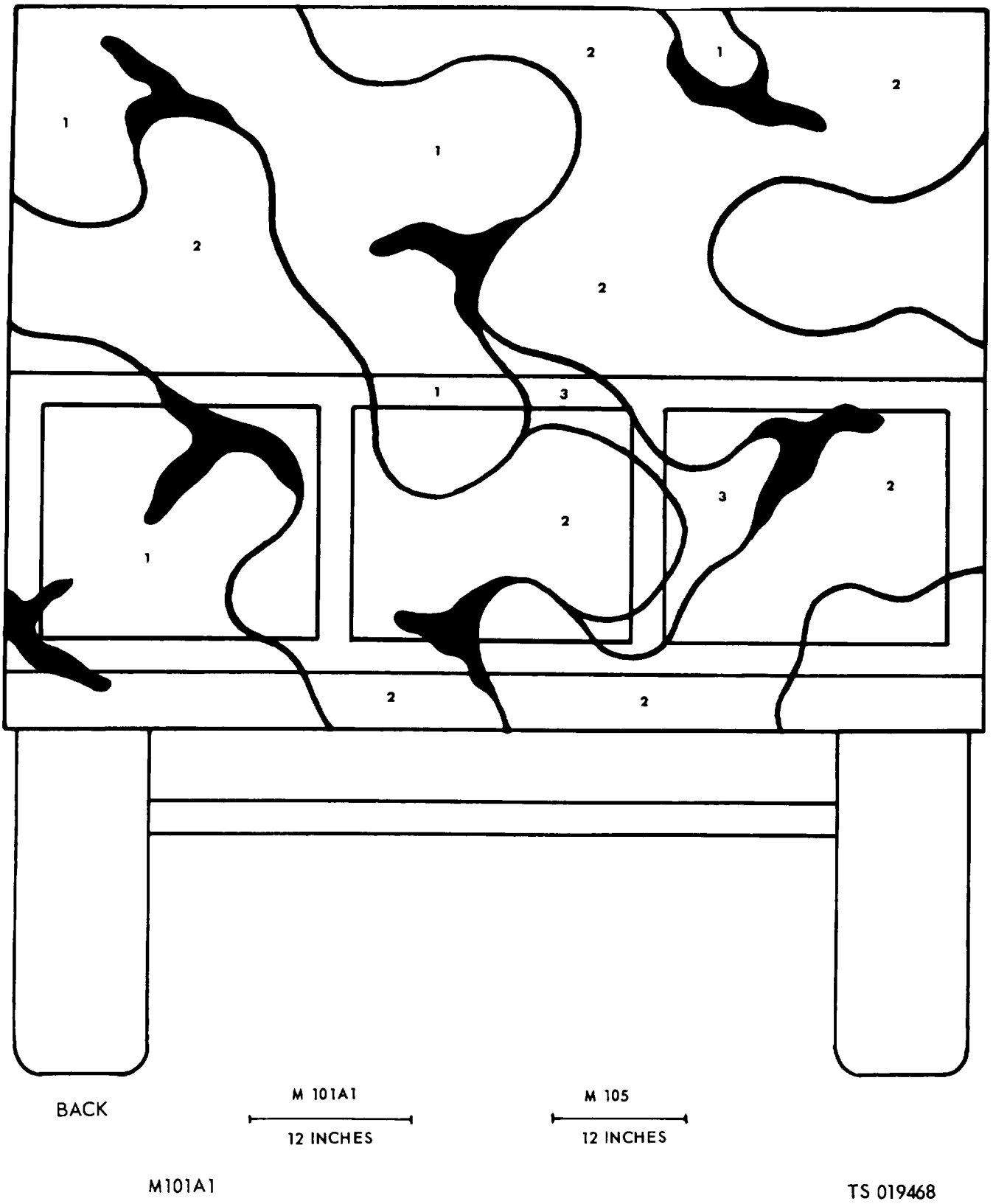

Figure 3-12. M101A1 3/4T trailer (M105 1-1/2T trailer) (sheet 2 of 5).

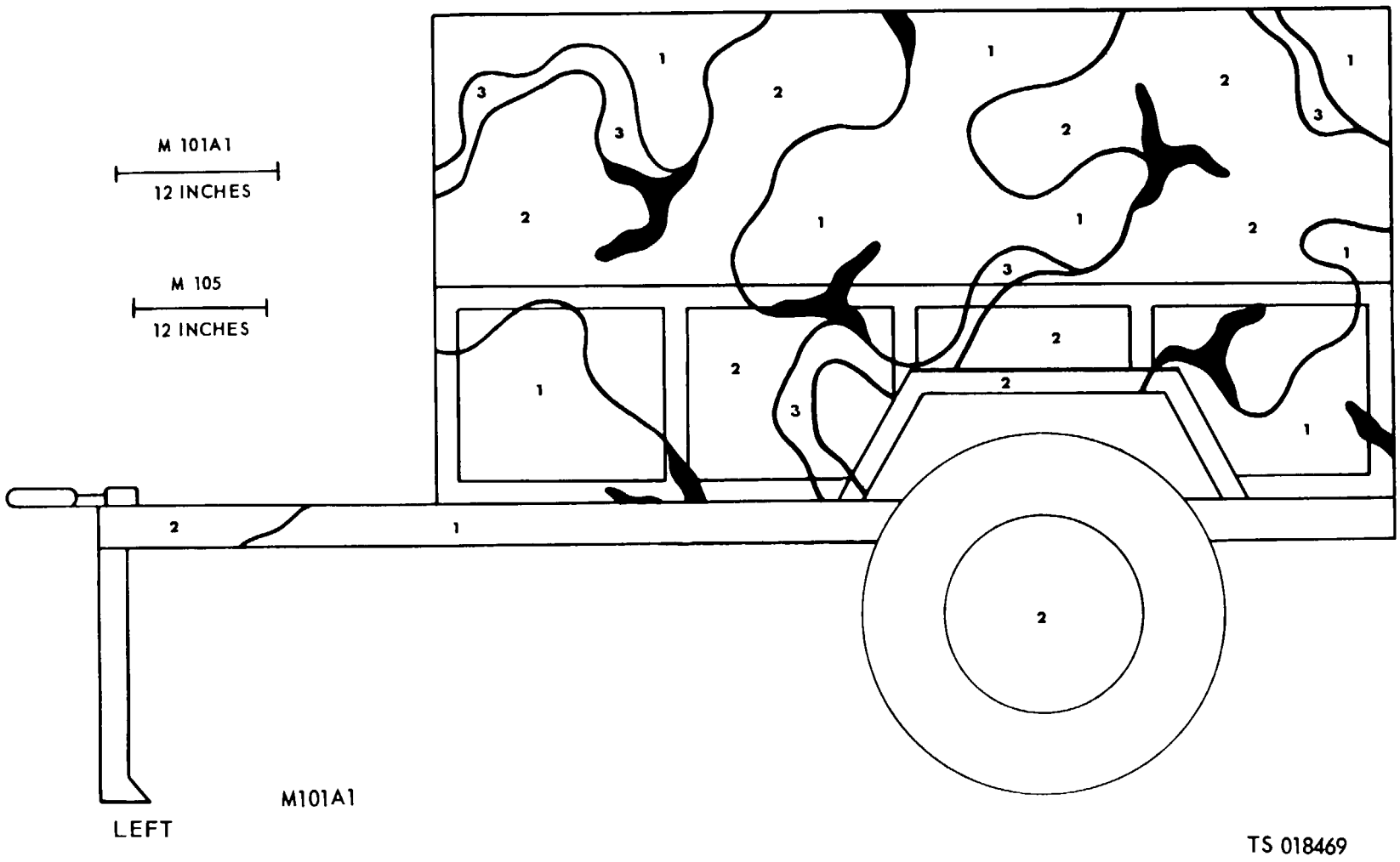

Figure 3-12. M101A1 3/4T trailer (M105 1-1/2T trailer} (sheet 3 of 5)

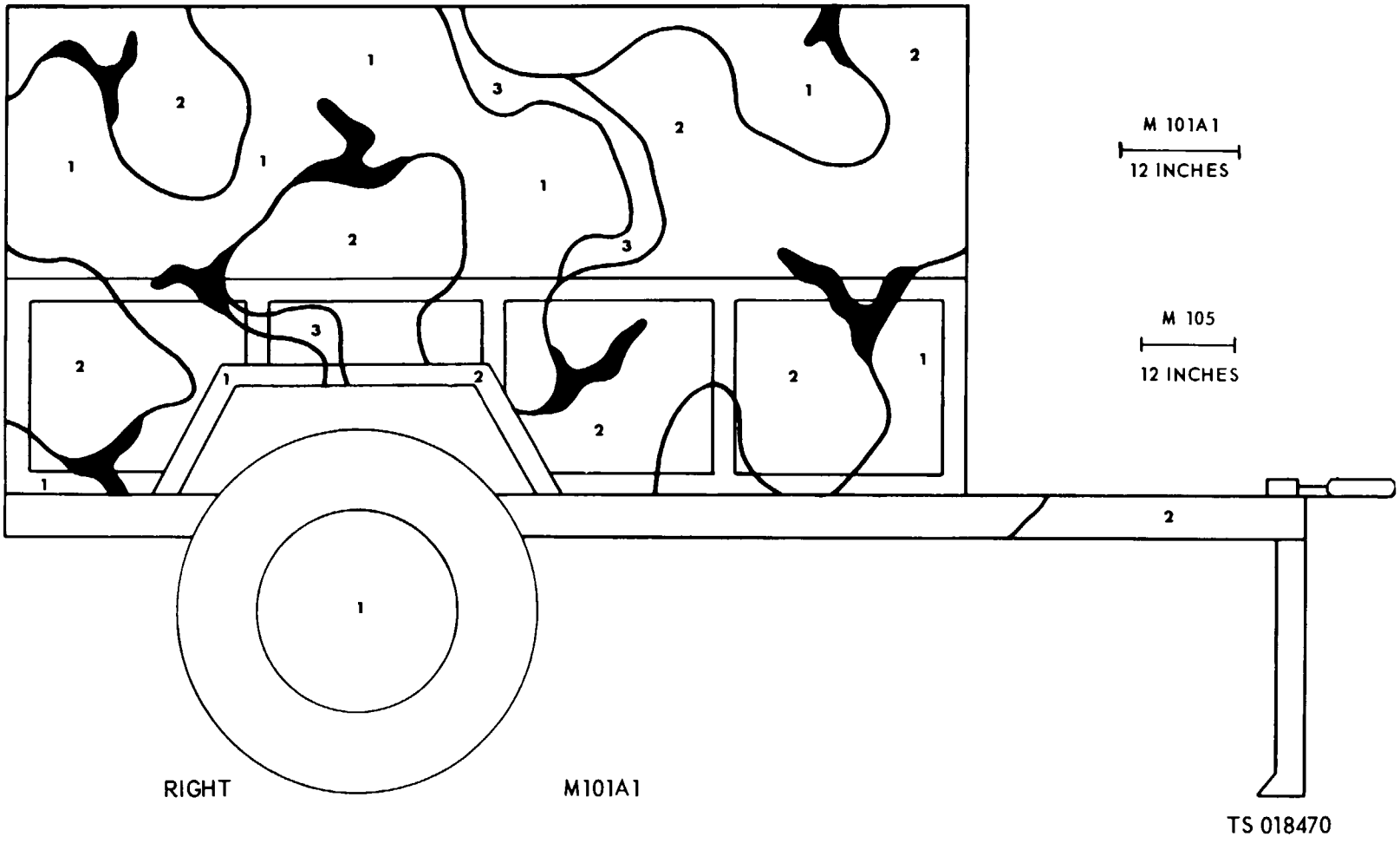

Figure 3-12. M101A1 3/4T trailer (M105 1-1/2T trailer) (sheet 4 of 5).

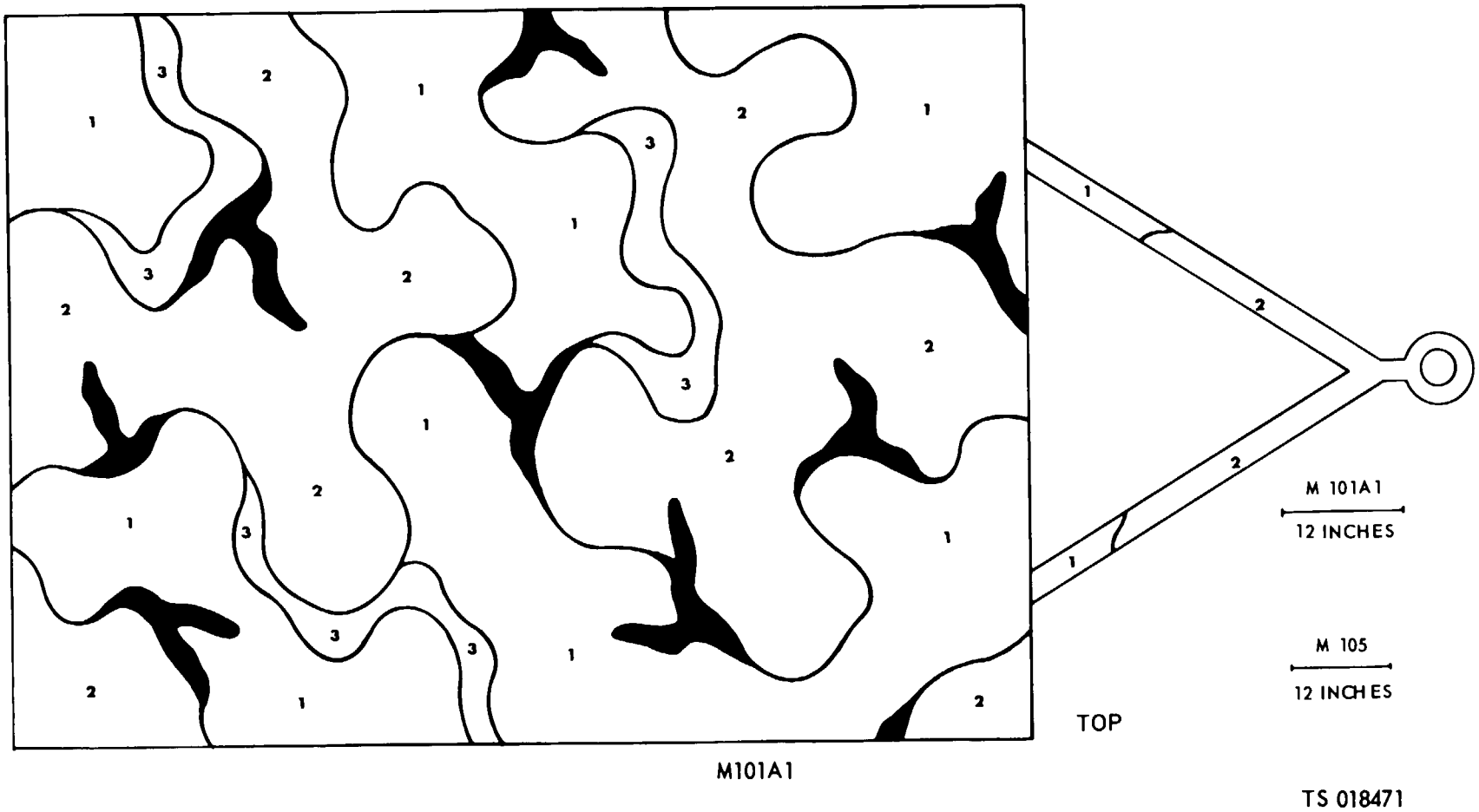

Figure 3-12. MA101A1 3/4T trailer M105 1-1/2T trailer) (sheet 5 of 5).

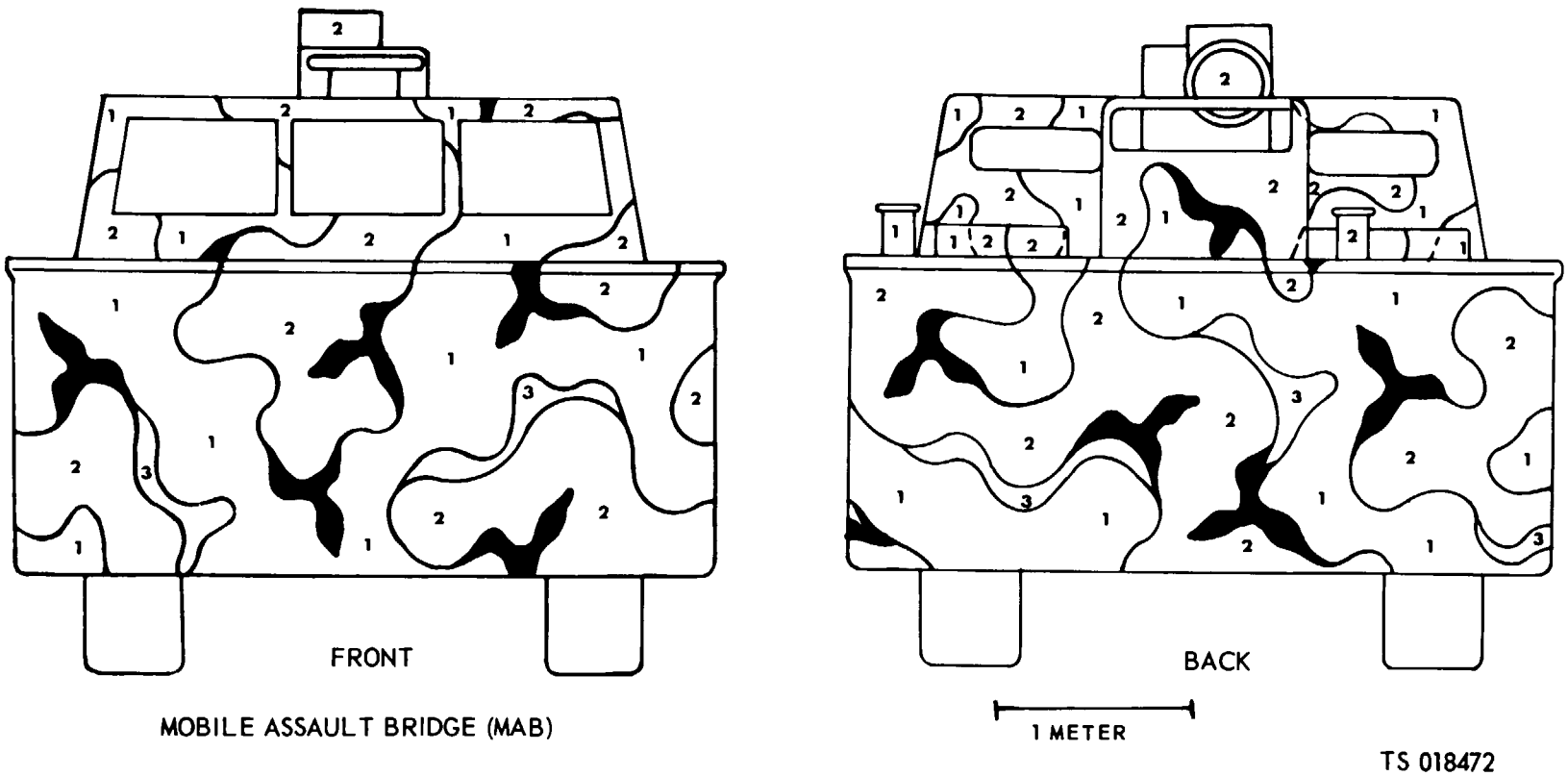

Figure 3-13. Mobile assault bridge (MAB) (sheet 1 of 4).

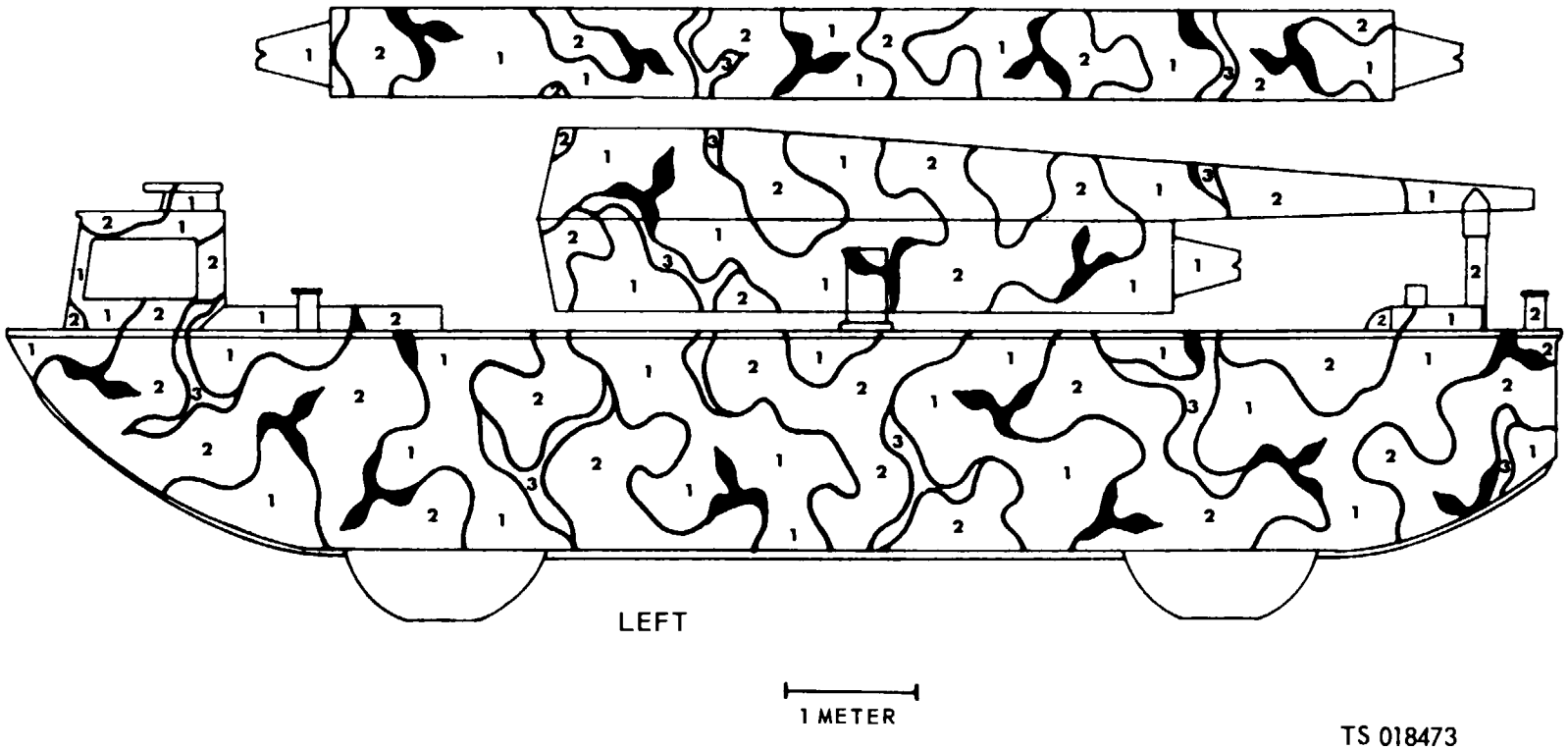

Figure 3-13. Mobile assault bridge (MAB) (sheet 2 of 4).

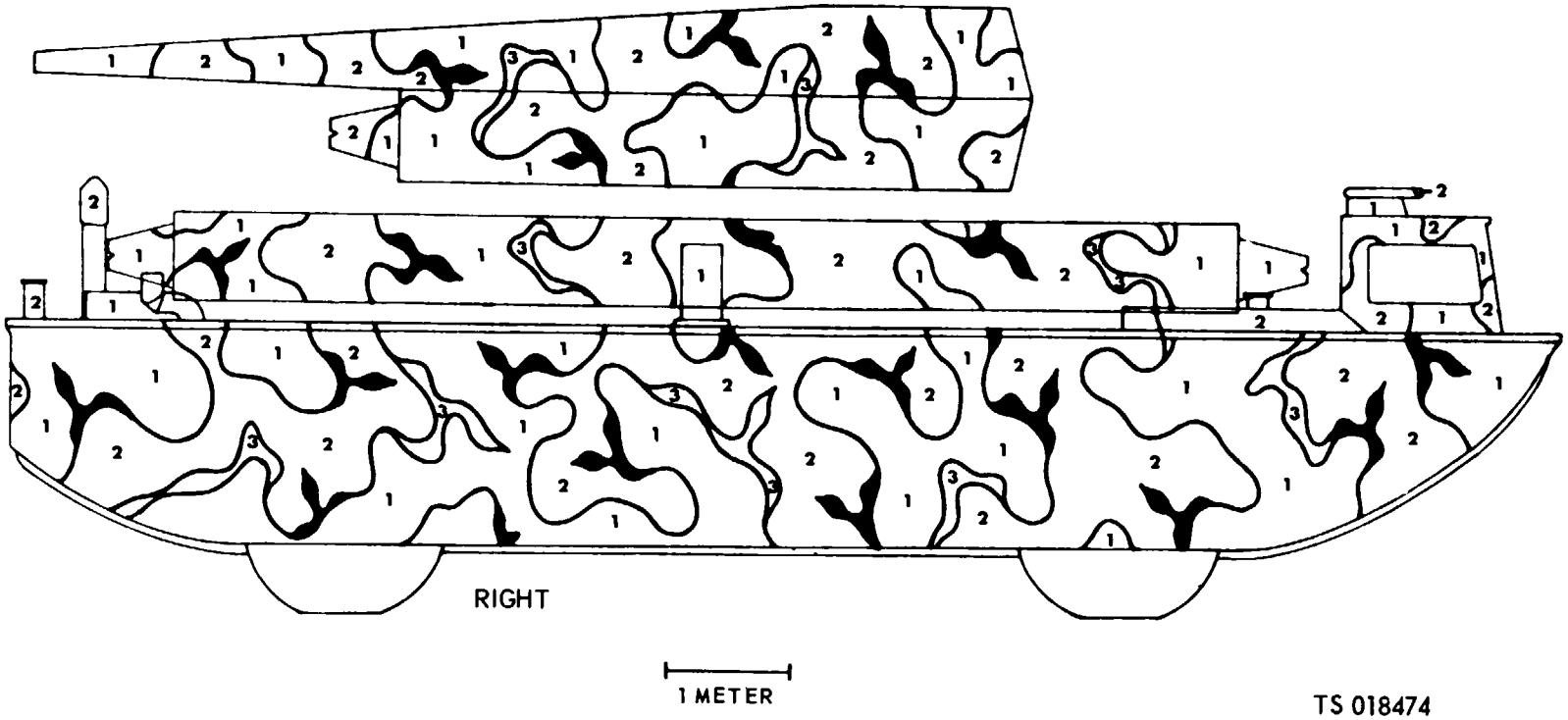

Figure 3-13. Mobile assault bridge (MAB) (sheet 3 of 4).

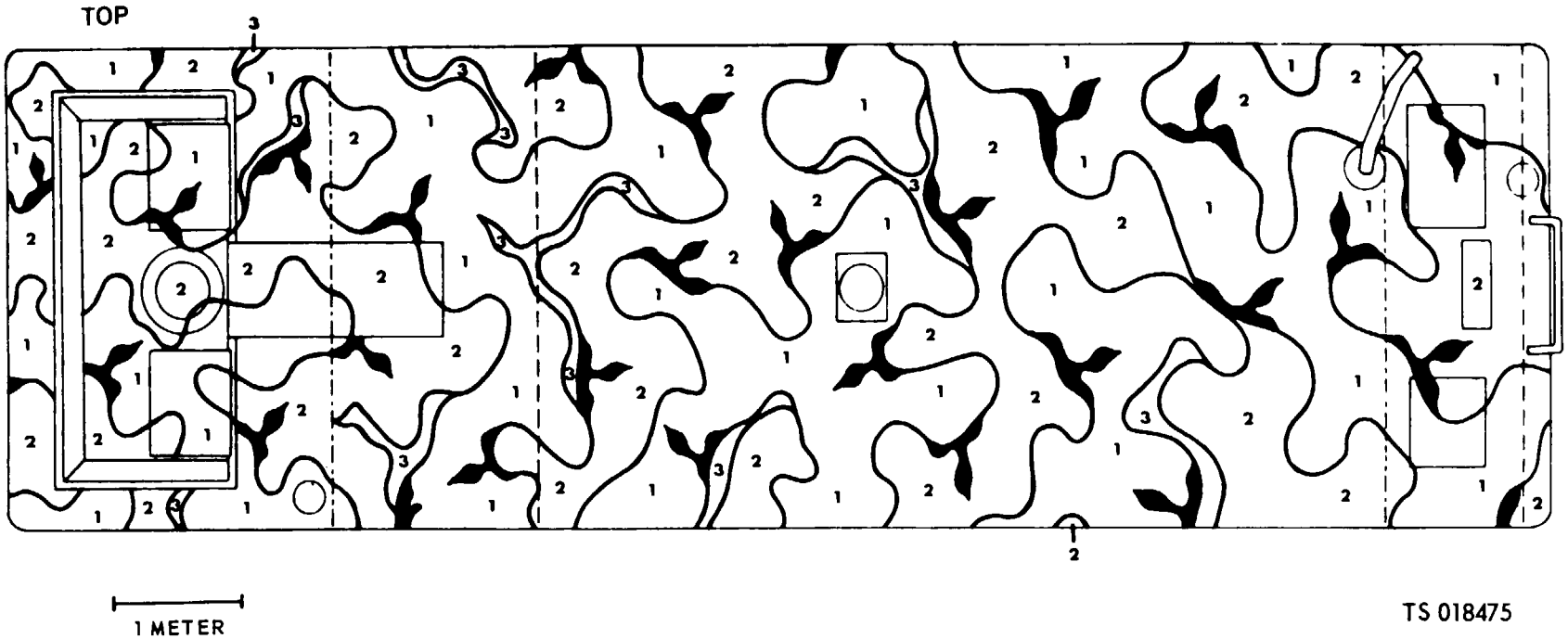

Figure 3-13. Mobile assault bridge (MAB) (sheet 4 of 4).

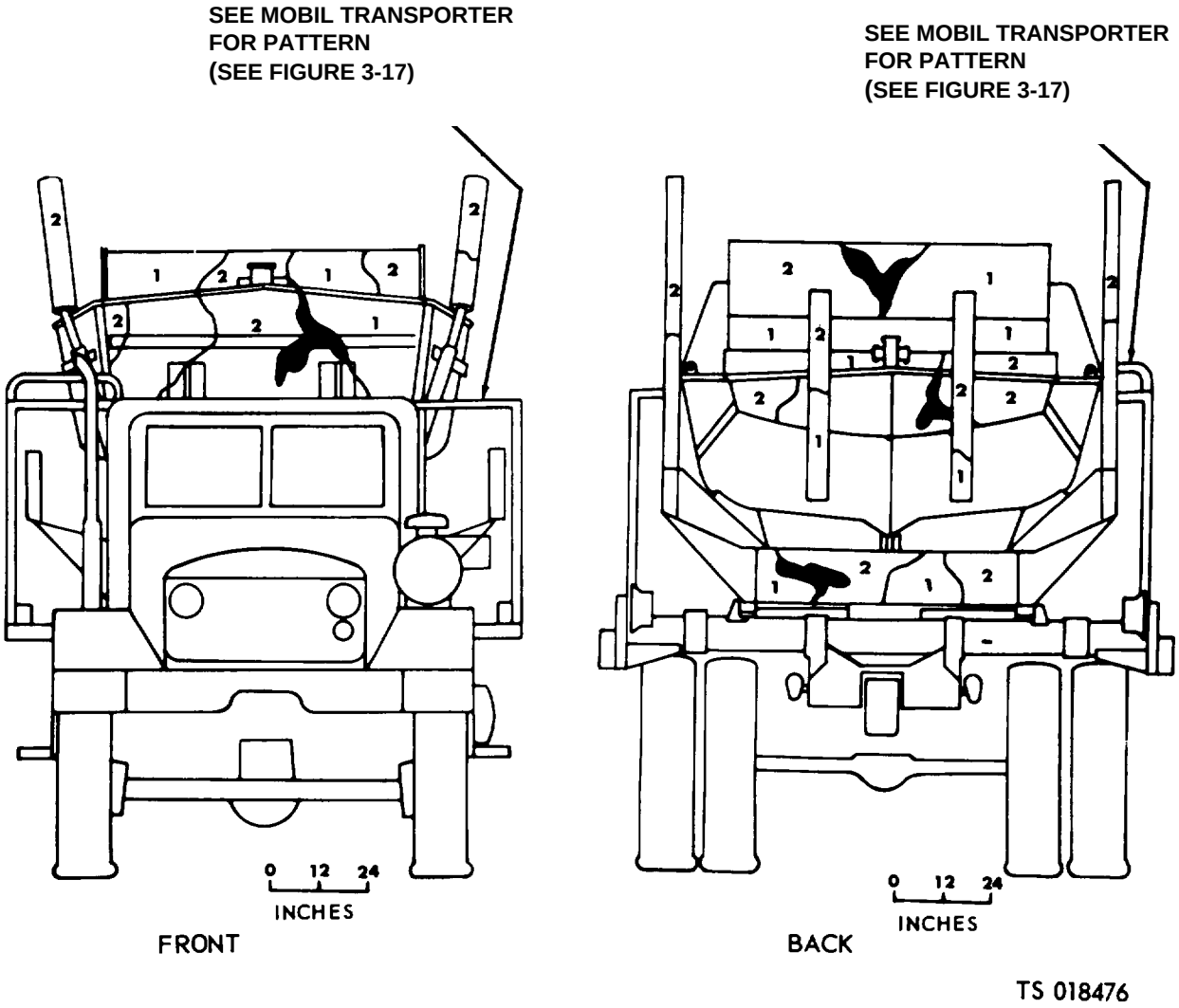

Figure 3-14. Bridge, erection boat and transporter (sheet 1 of 4).

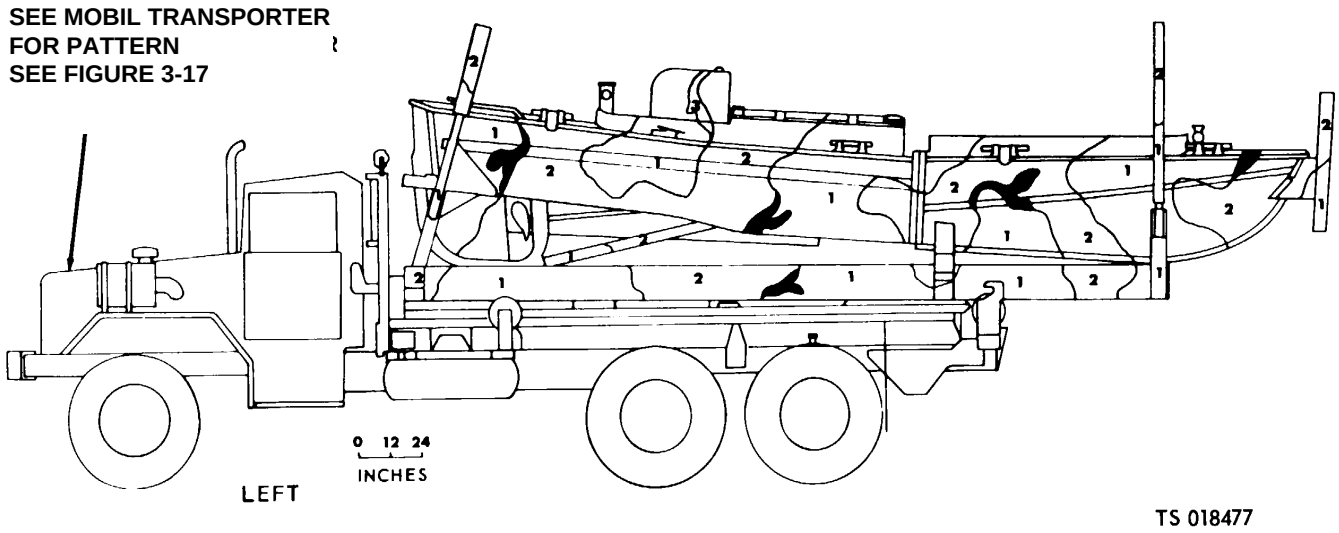

Figure 3-14. Bridge, erection boat and transporter (sheet 2 of 4).

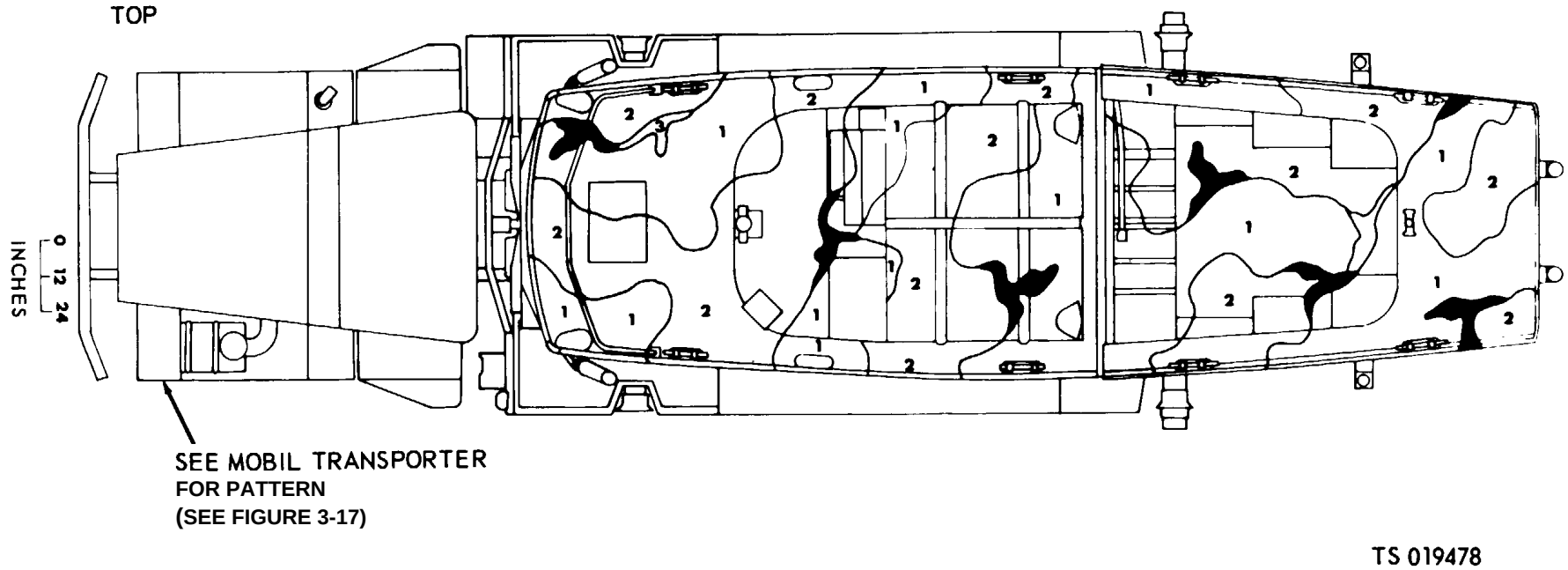

Figure 3-14. Bridge, erection boat and transporter (sheet 3 of 4).

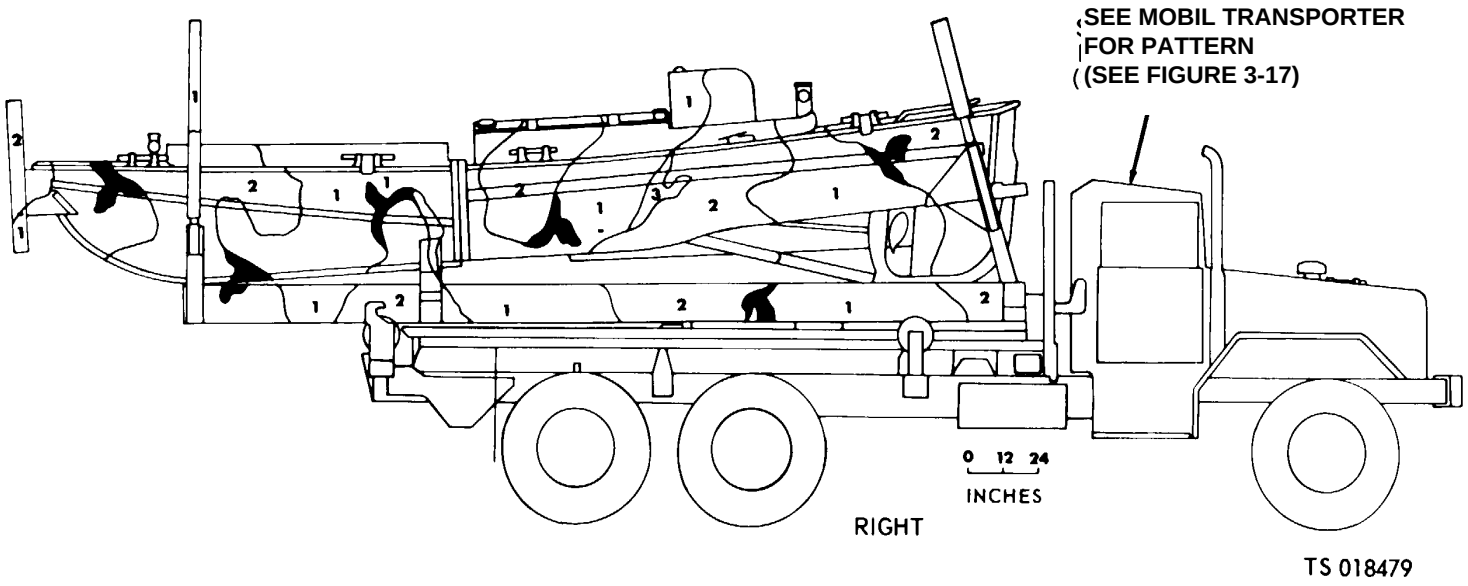

Figure 3-14. Bridge, erection boat and transporter (sheet 4 of 4).

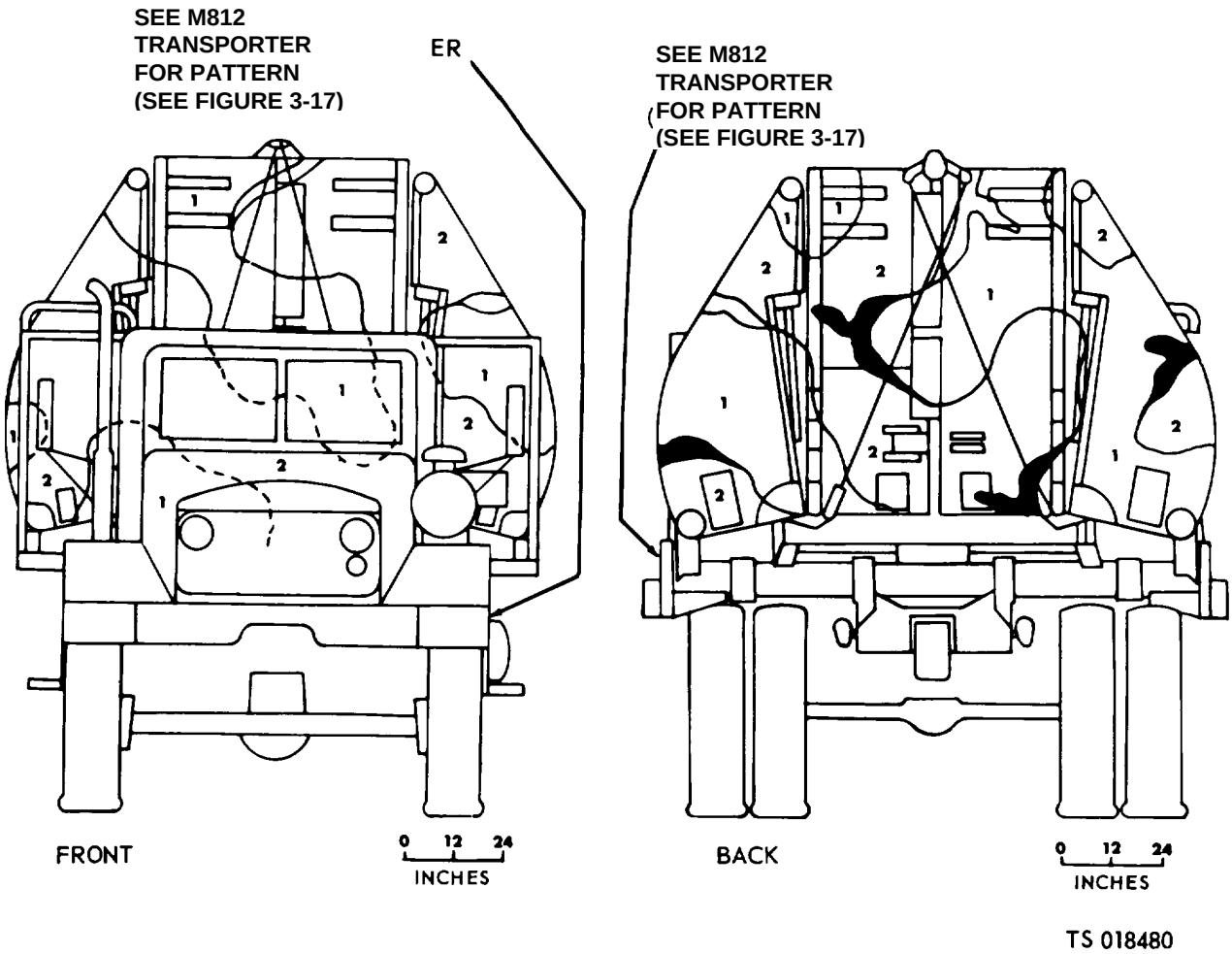

Figure 3-15. Interior bay on transporter (sheet 1 of 4).

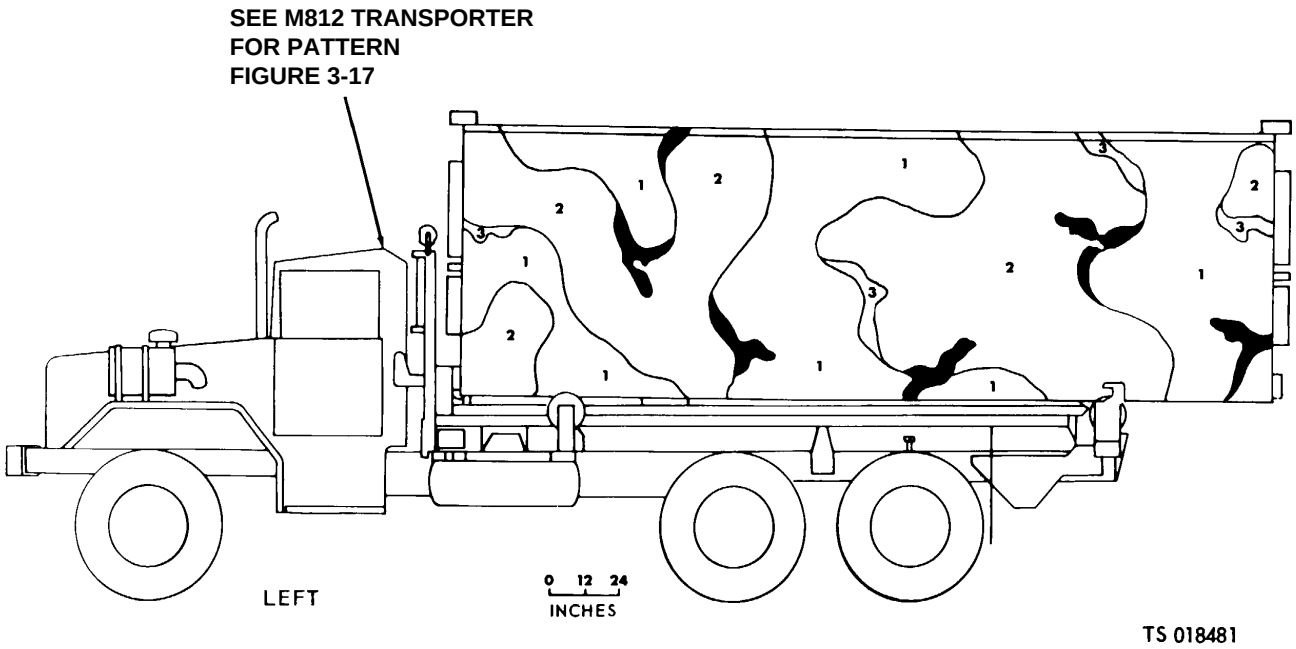

Figure 3-15. Interior bay on transporter (sheet 2 of 4)

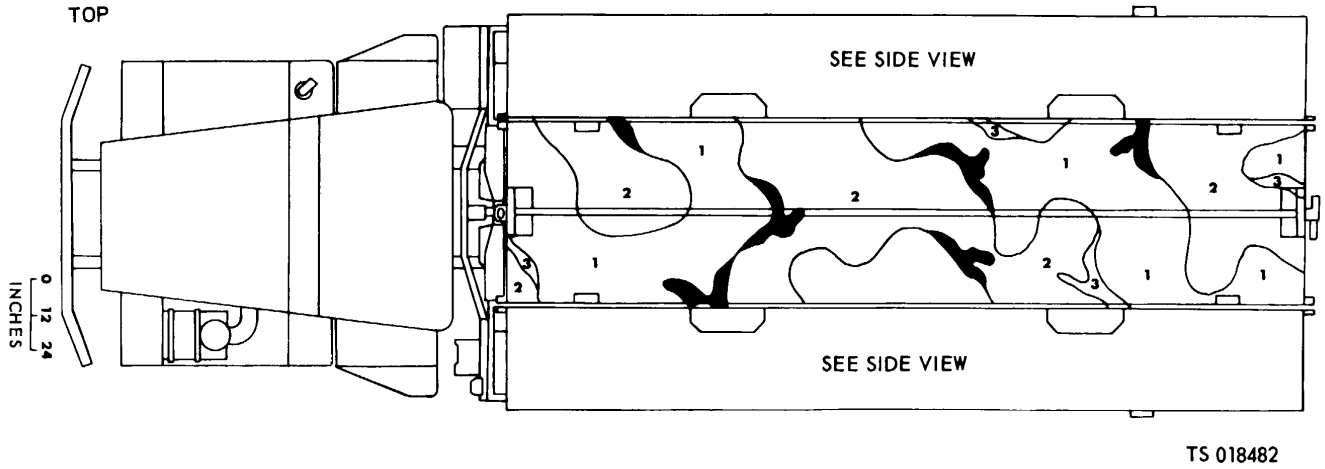

Figure 3-15. Interior bay on transporter (sheet 3 of 4).

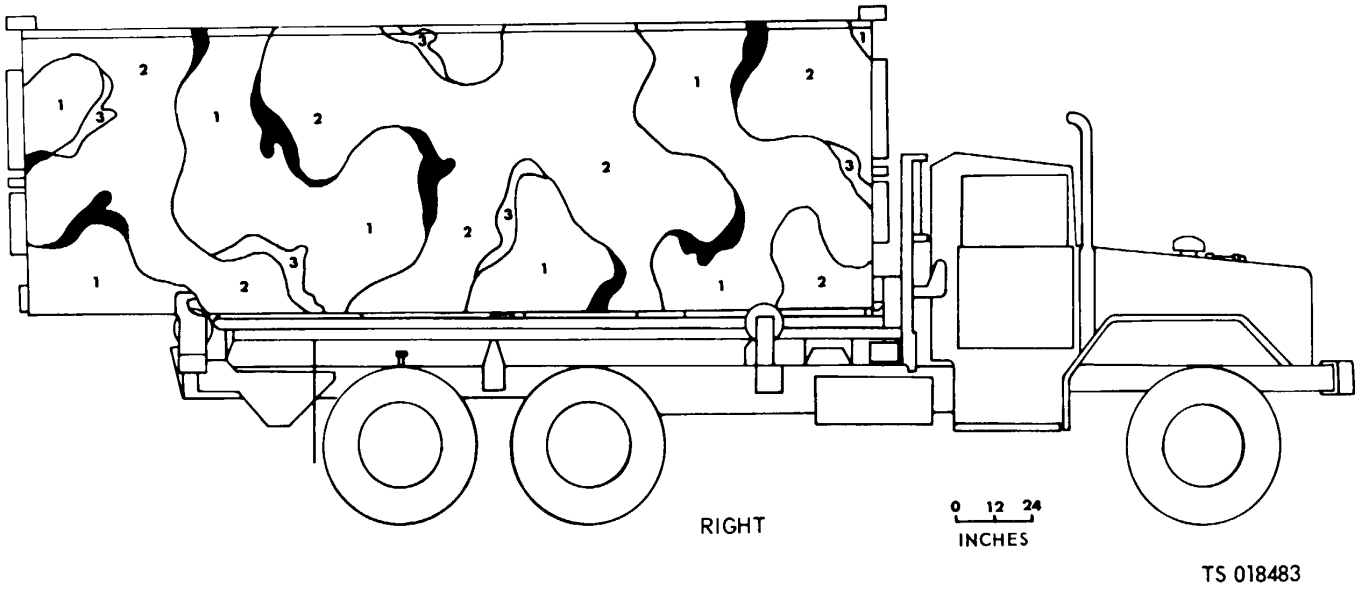

Figure 3-15. Interior bay on transporter (sheet 4 of 4).

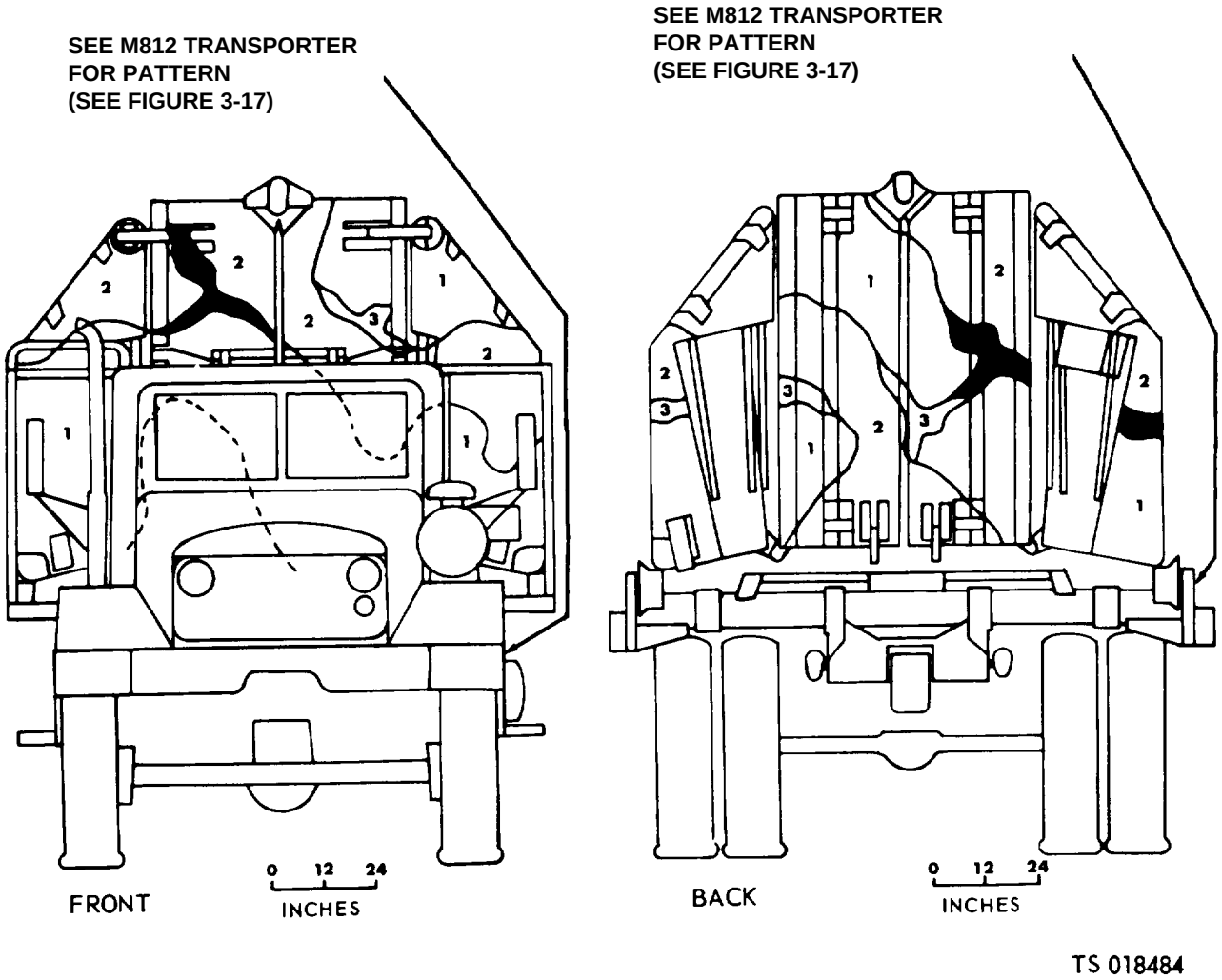

Figure 3-16. Ramp bay on transporter (sheet 1 of 4).

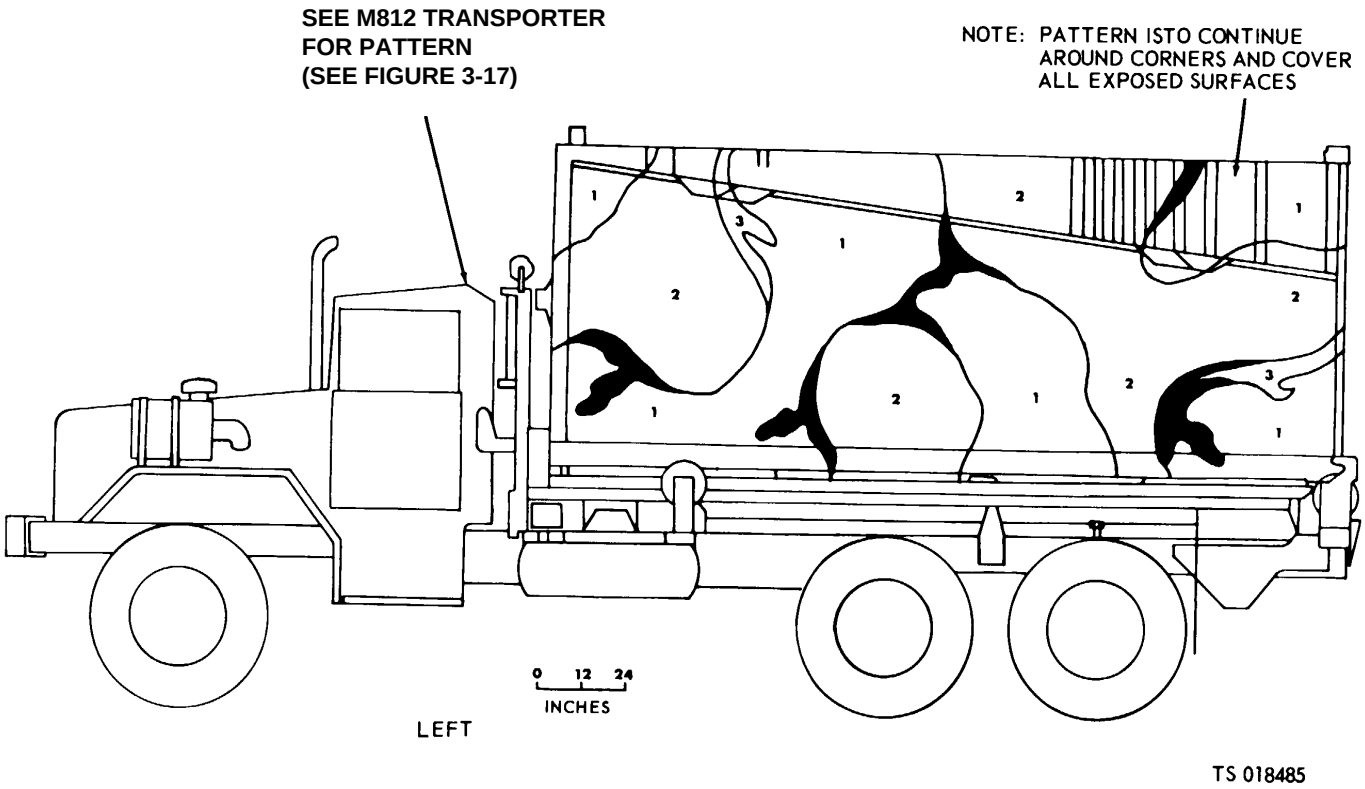

Figure 3-16. Ramp bay on transporter (sheet 2 of 4).

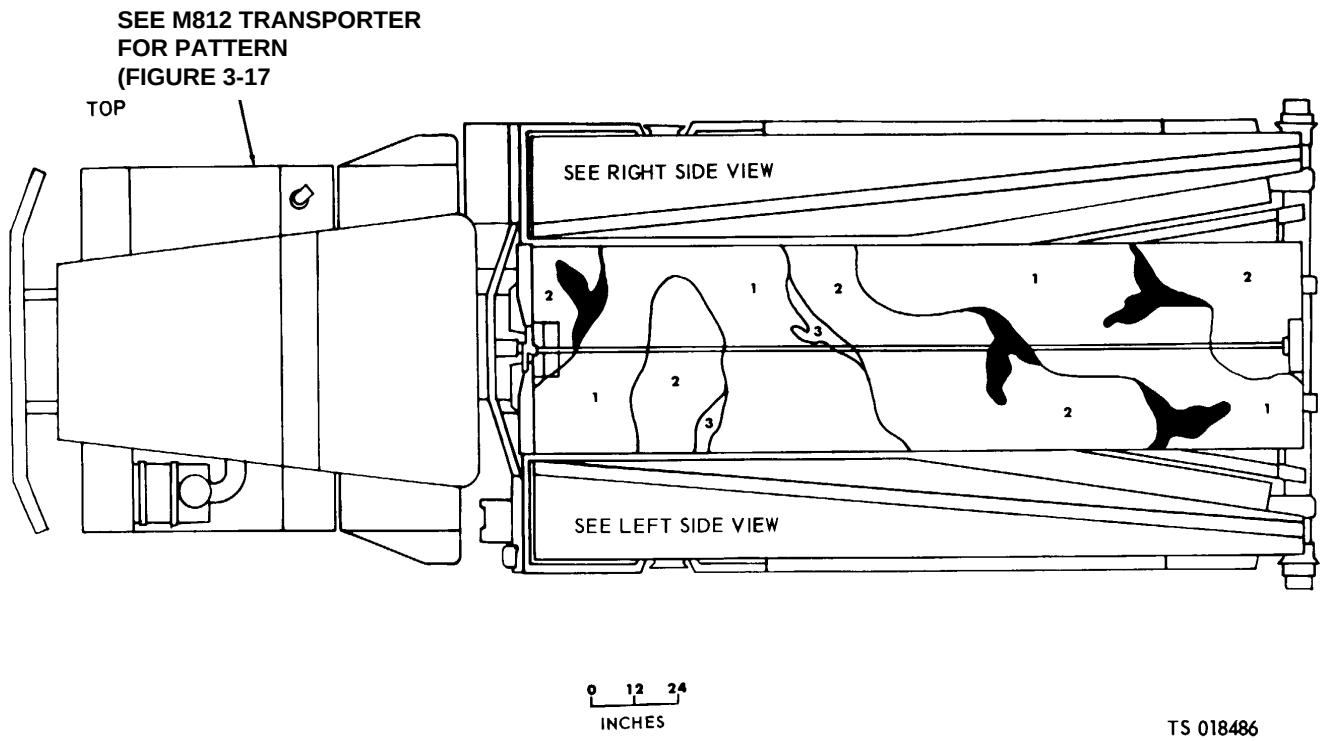

Figure 3-16. Ramp bay on transporter (sheet 3 of 4).

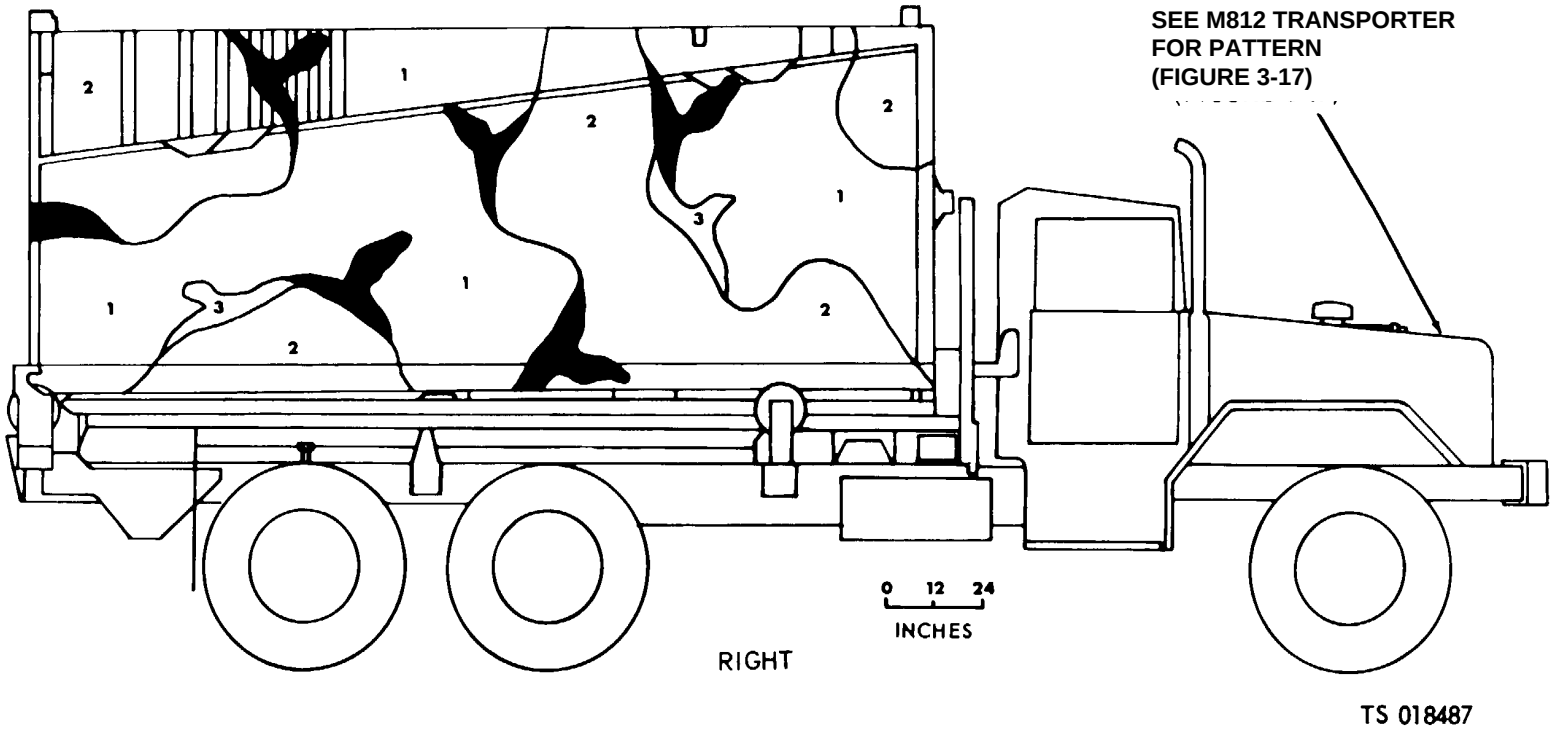

Figure 3-16. Ramp bay on transporter (sheet 4 of 4).

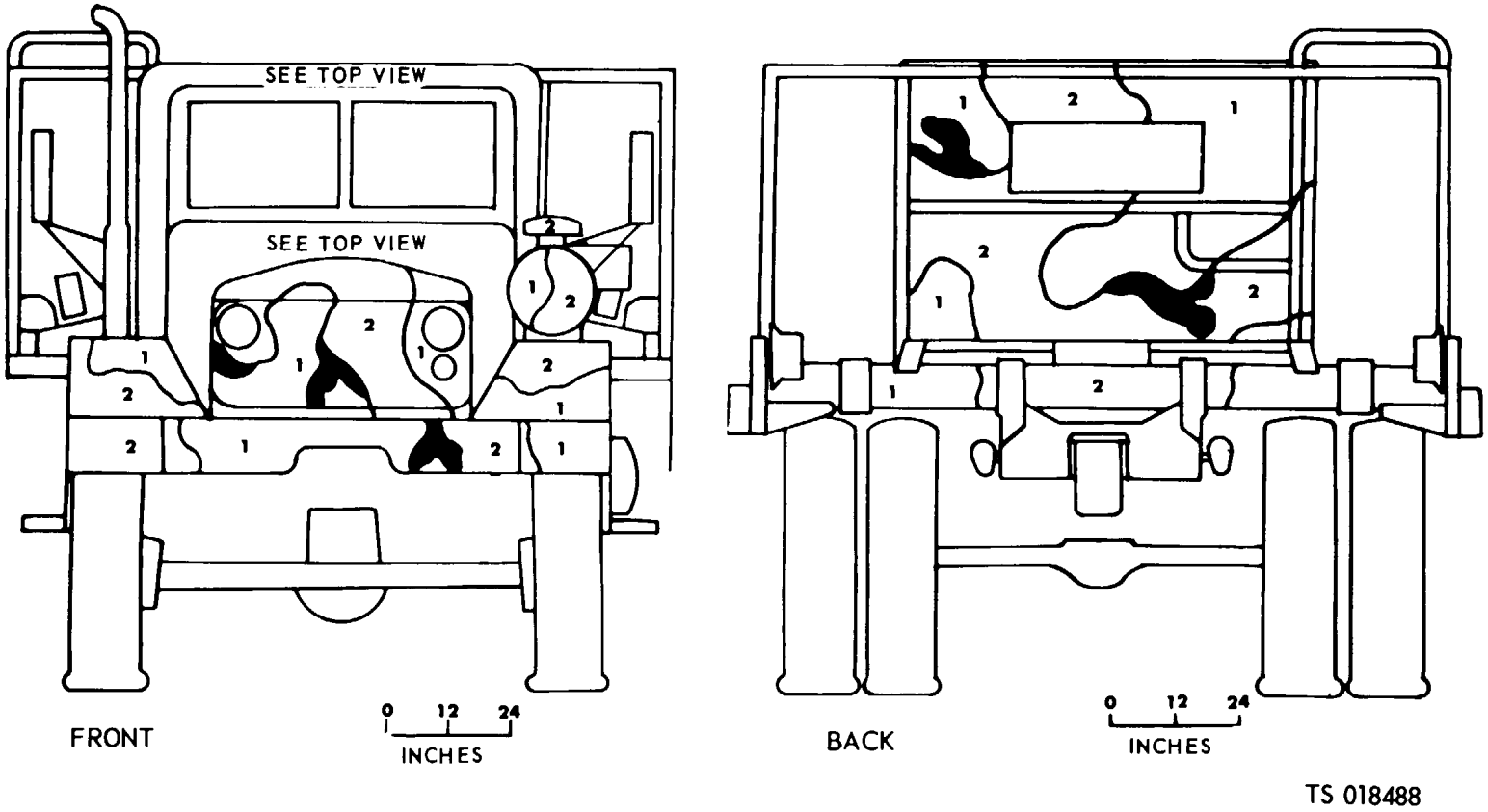

Figure 3-17. Transporter (sheet 1 of 4).

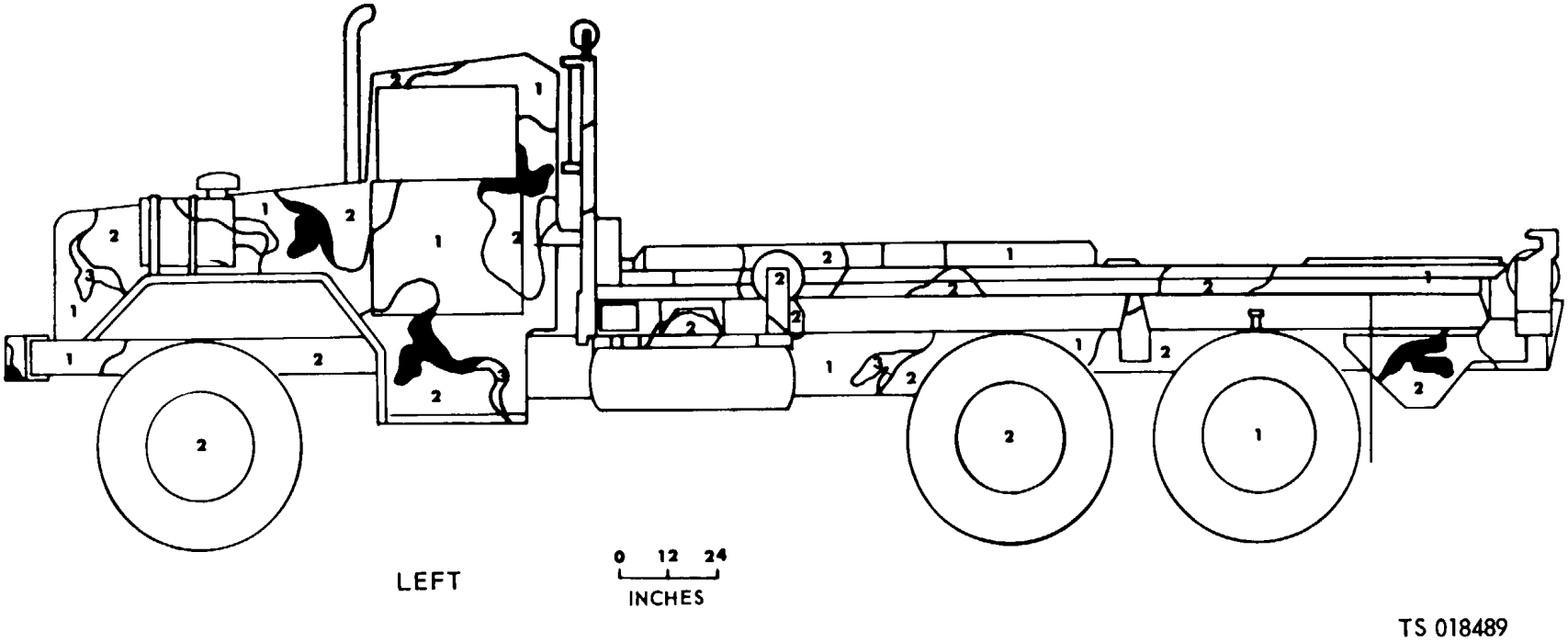

Figure 3-17. Transporter (sheet 2 of 4).

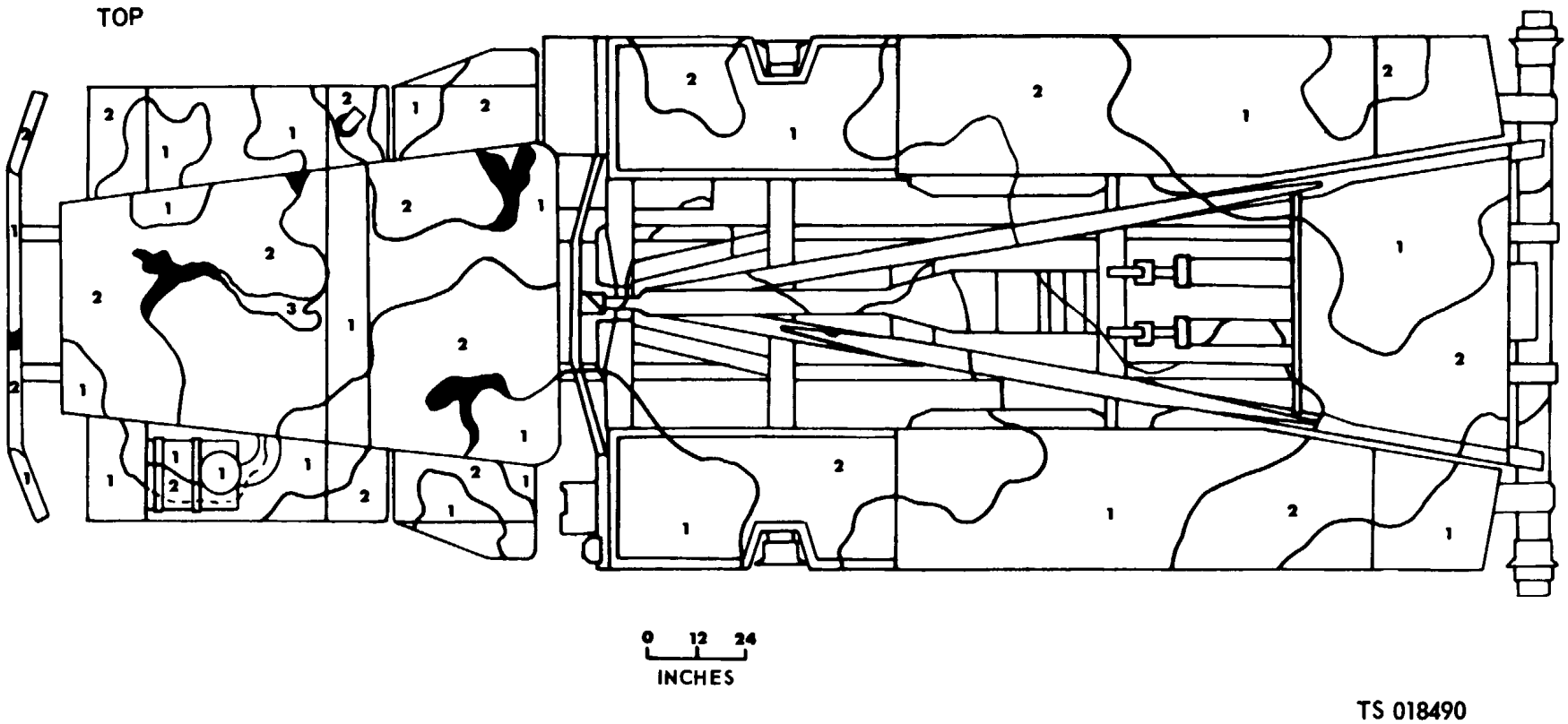

Figure 3-17. Transporter (sheet 3 of 4).

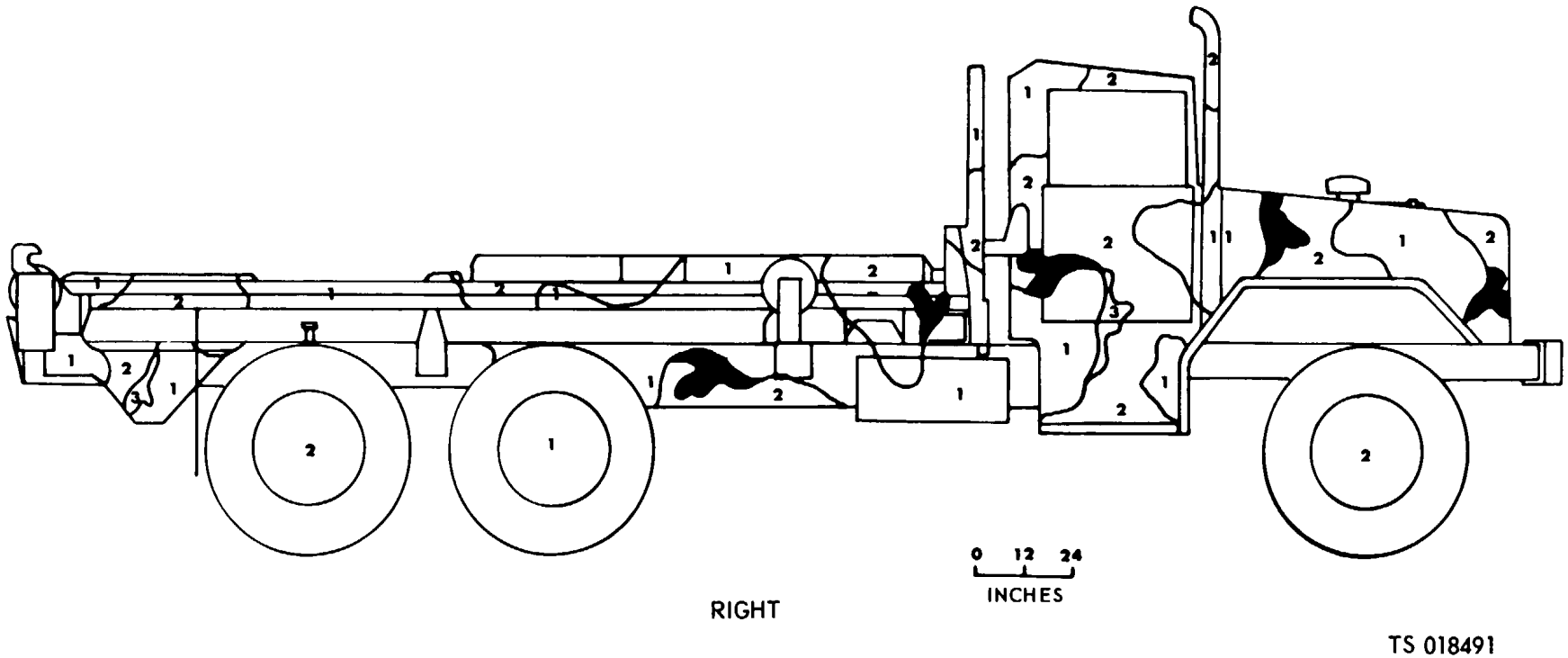

Figure 3-17. Transporter (sheet 4 of 4).

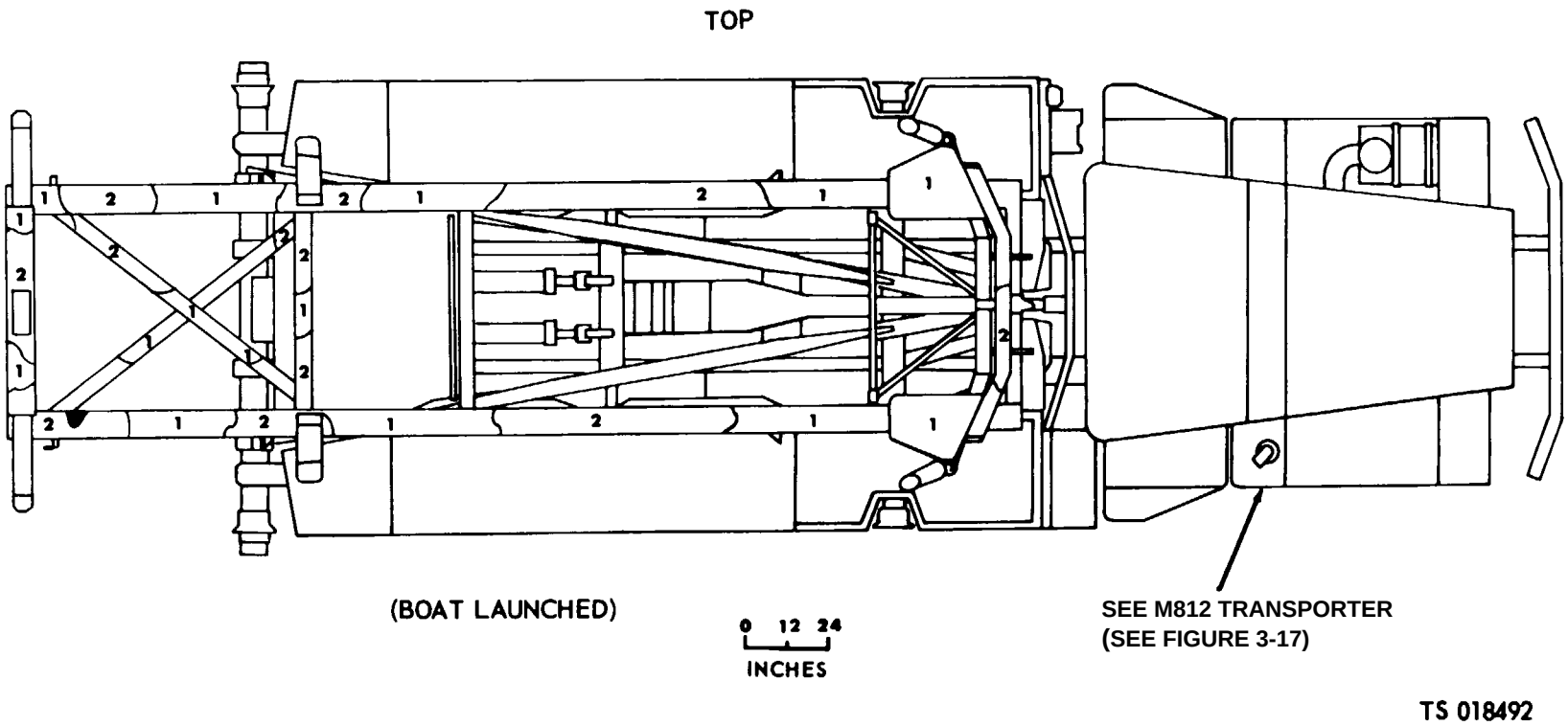

Figure 3-18. Transporter with Boat Launched.

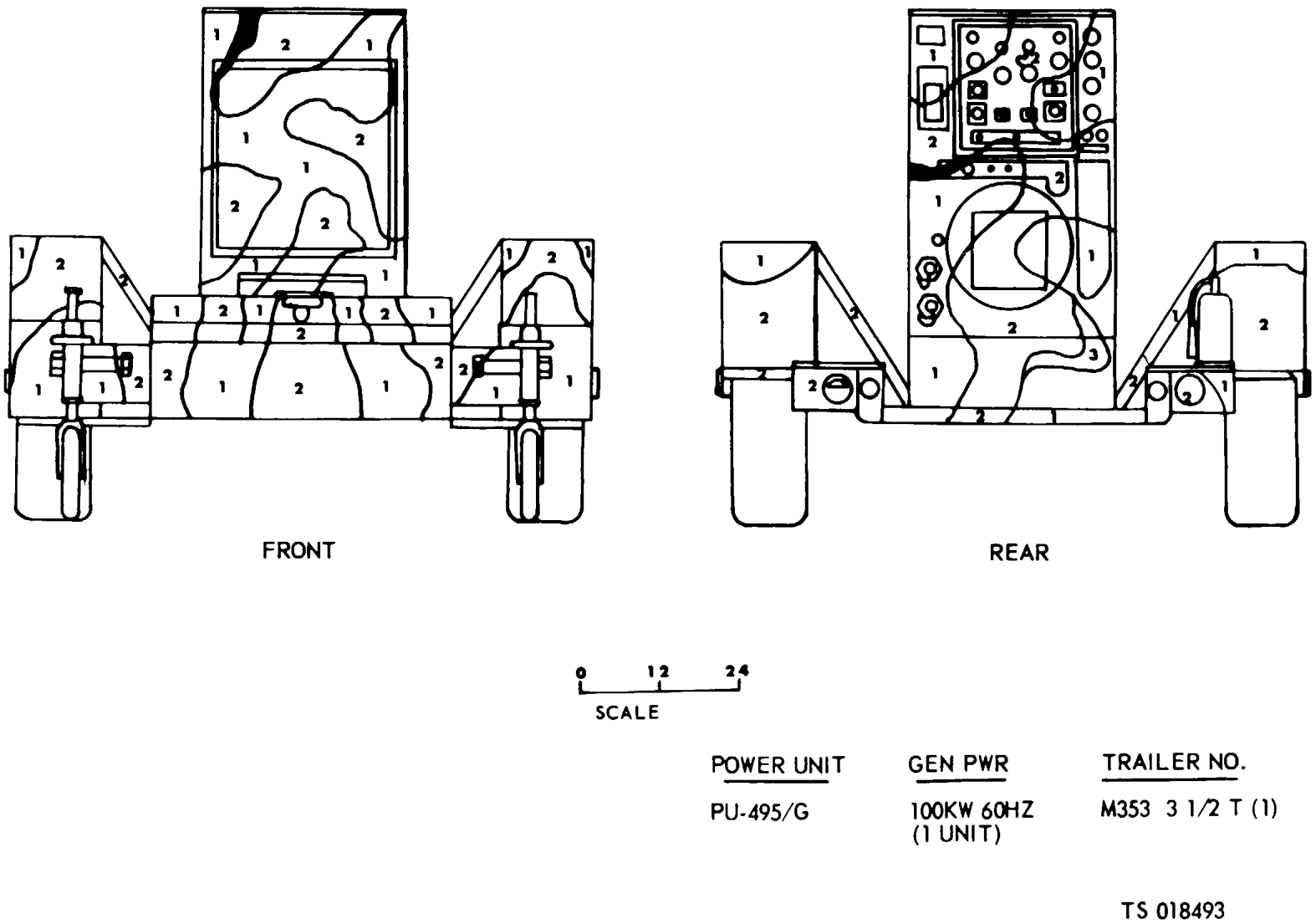

Figure 3-19. M.753 3-1/2T Trailer PU-495/G (sheet 1 of 3).

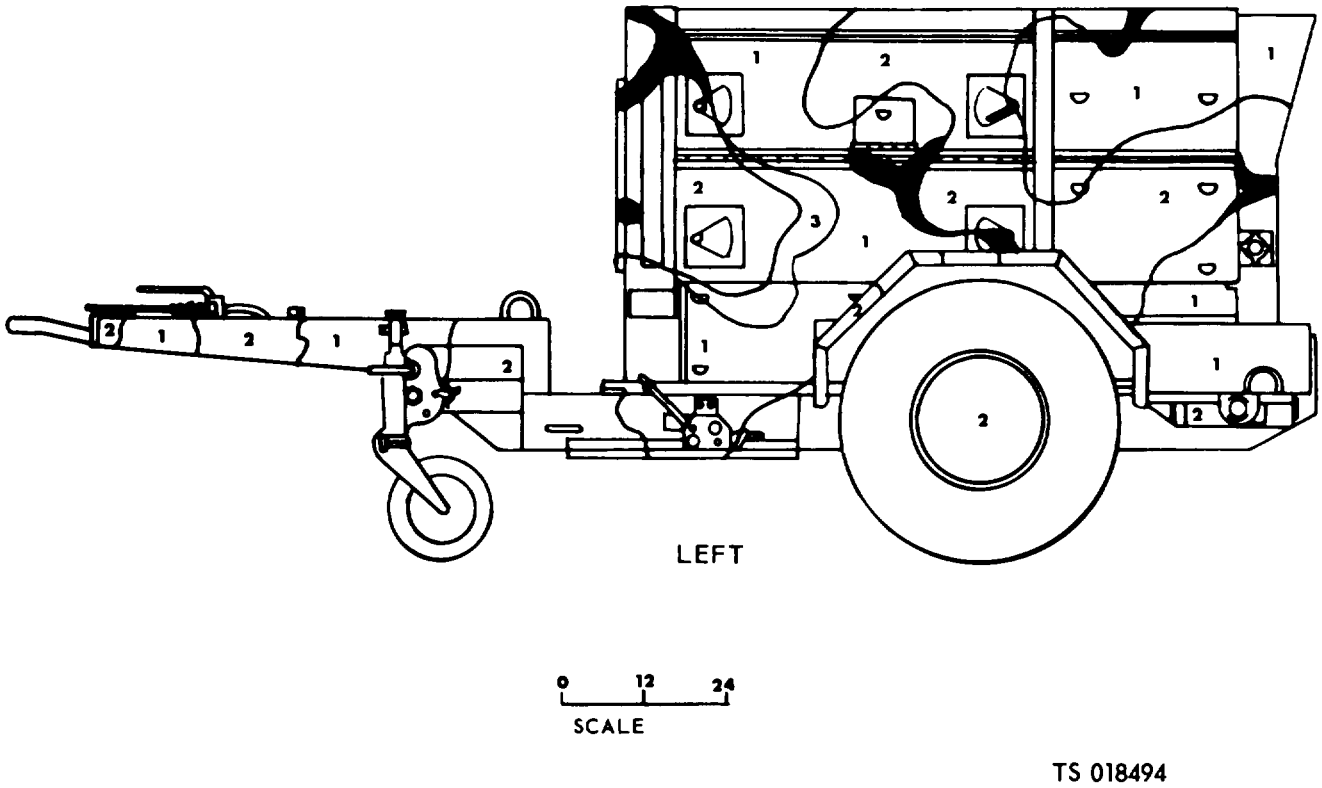

Figure 3-19. M353 3-1/2T Trailer PU-495/G (sheet 2 of 3).

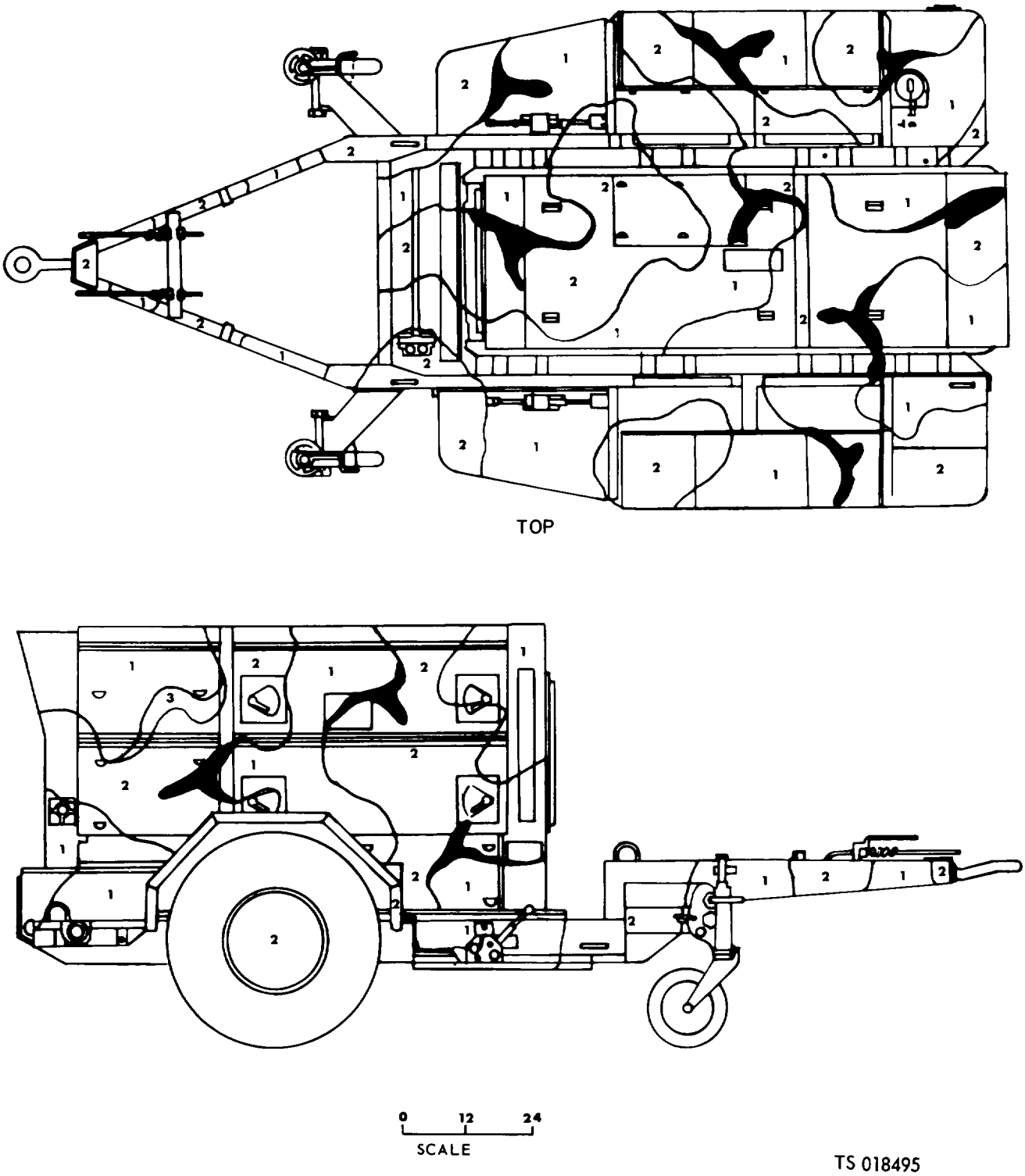

Figure 3-19. M3.53 3-1/2T Trailer PU-495/G (sheet 3 of 3).

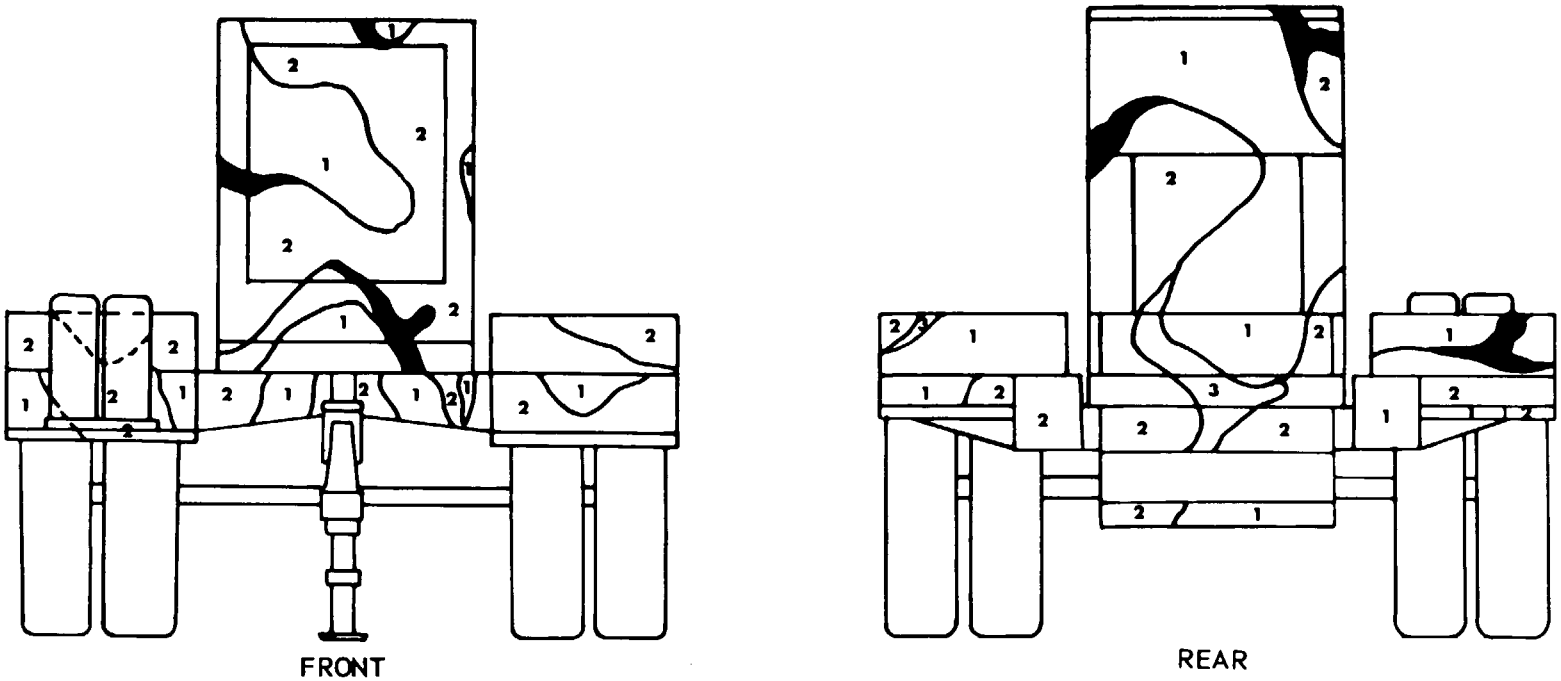

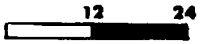

POWER UNIT	GEN PWR	TRAILER NO.
PU-406 A/M	30KW 60HZ (1UNIT)	M200A1 2 1/2 T (1)
ALSO:		
PU-650A/G	60KW 60HZ (1 UNIT)	M200A1 2 1/2 T (1)
PU-707/M	60KW 400HZ (1 UNIT)	M200A1 2 1/2 T (1)
AN/MJQ-10	PU-406 A/M (2 UNITS)	M200A1 2 1/2 T (2)
AN/MJQ-12	PU-650A/G (2 UNITS)	M200A1 2 1/2 T (2)
PU-732/M	15KW 400HZ (1 UNIT)	M200A1 2 1/2 T (1)
PU-760/M	30KW 400HZ (1 UNIT)	M200A1 2 1/2 T (1)
AN/MJQ-15	PU-732/M (2 UNITS)	M200A1 2 1/2 T (2)

TS 018496

Figure 3-20. M200A1 2-1/2T Trailer PU-406 A/M (sheet 1 of 3).

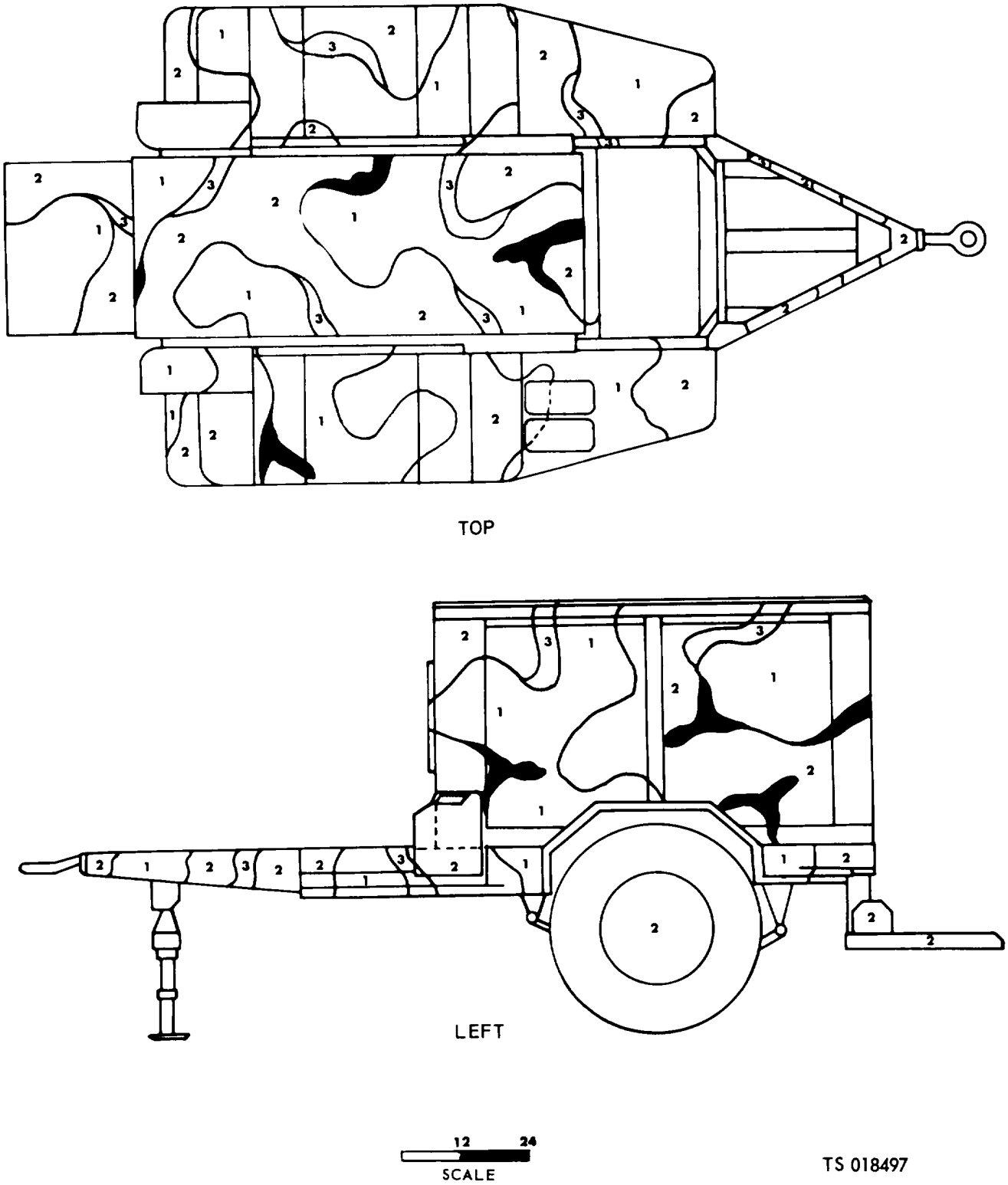

Figure 3-20. M200A1 2-1/2T Trailer PU-406 A/M (sheet 2 of 3).

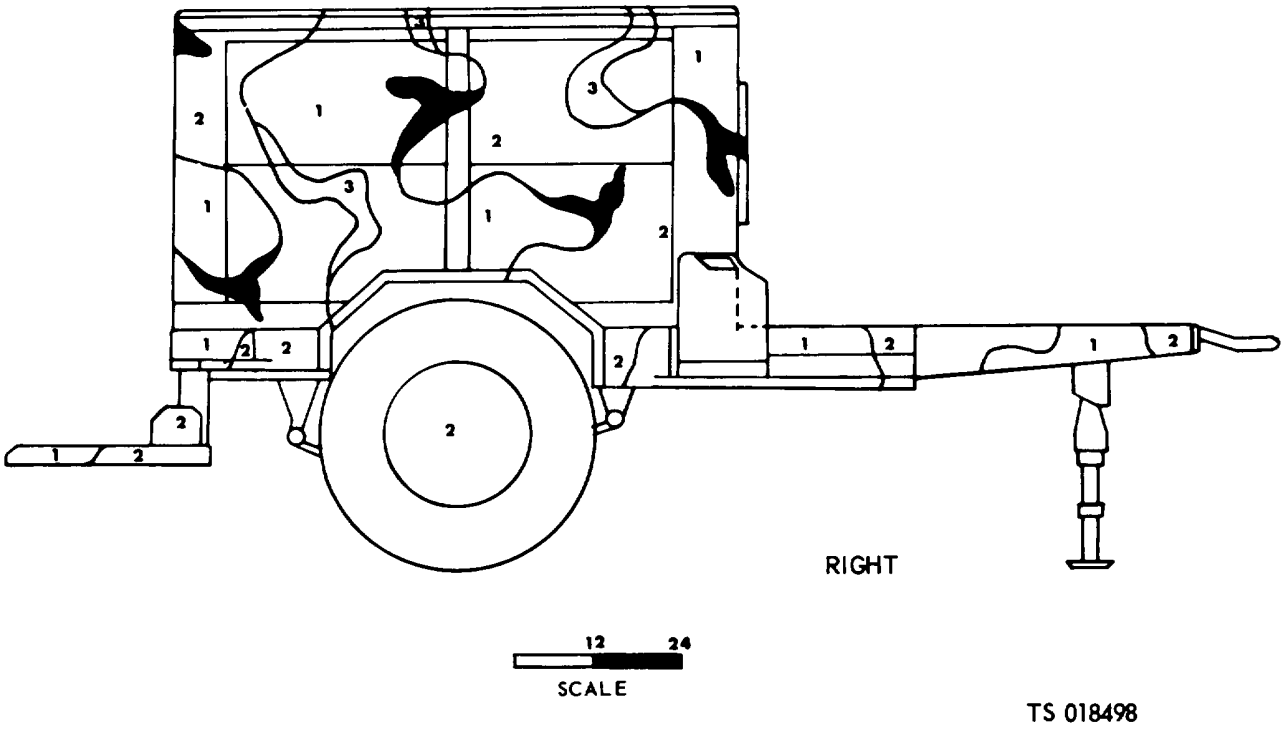

Figure 3-20. M200A1 2-1/2T Trailer PU-406 A/M (sheet 3 of 3).

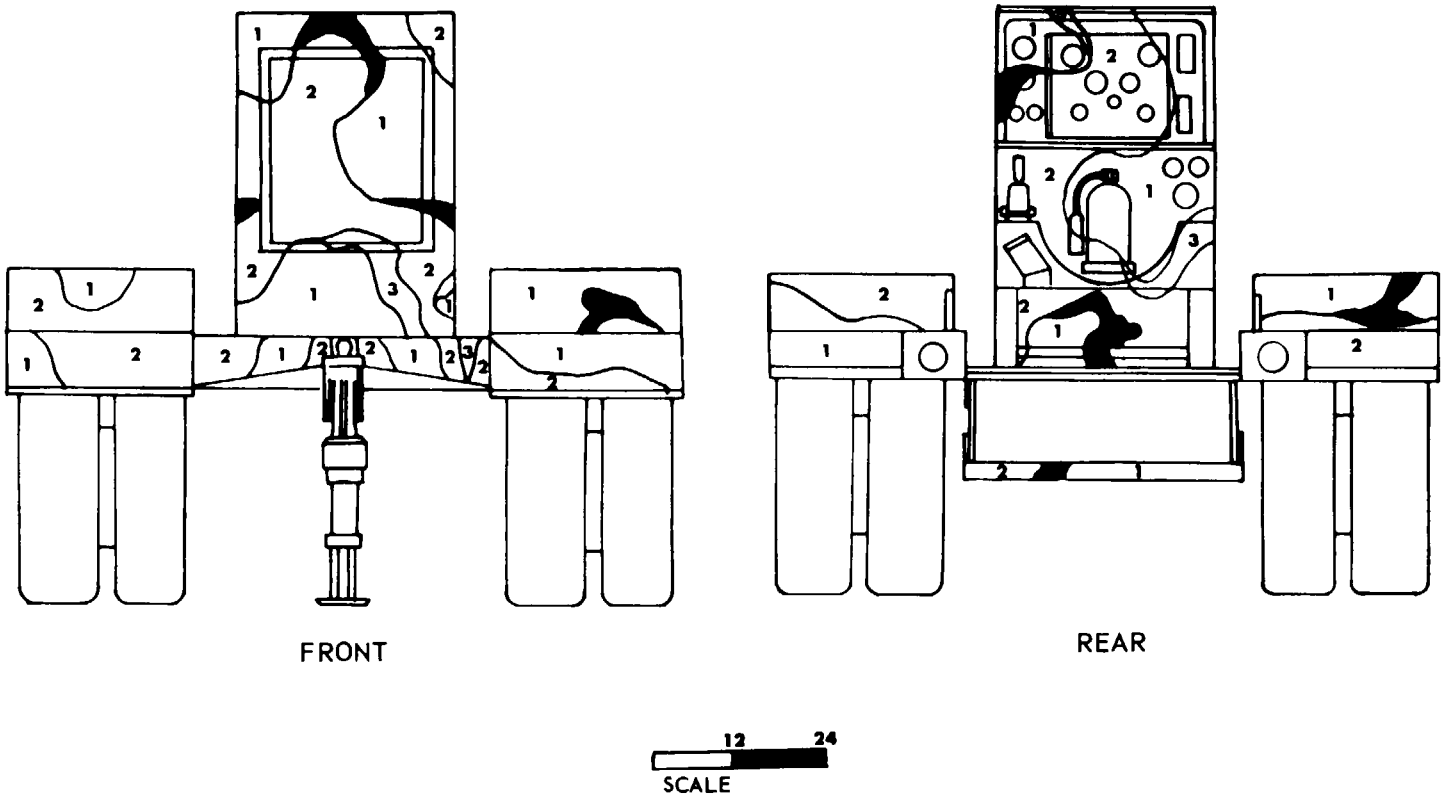

POWER UNIT	GEN PWR	TRAILER NO.
PU-405/M	15KW 60HZ (1UNIT)	M200A1 2 1/2 TON

TS 018499

Figure 3-21. M200A1 2-1/2T Trailer PU-405 /M (sheet 1 of 3).

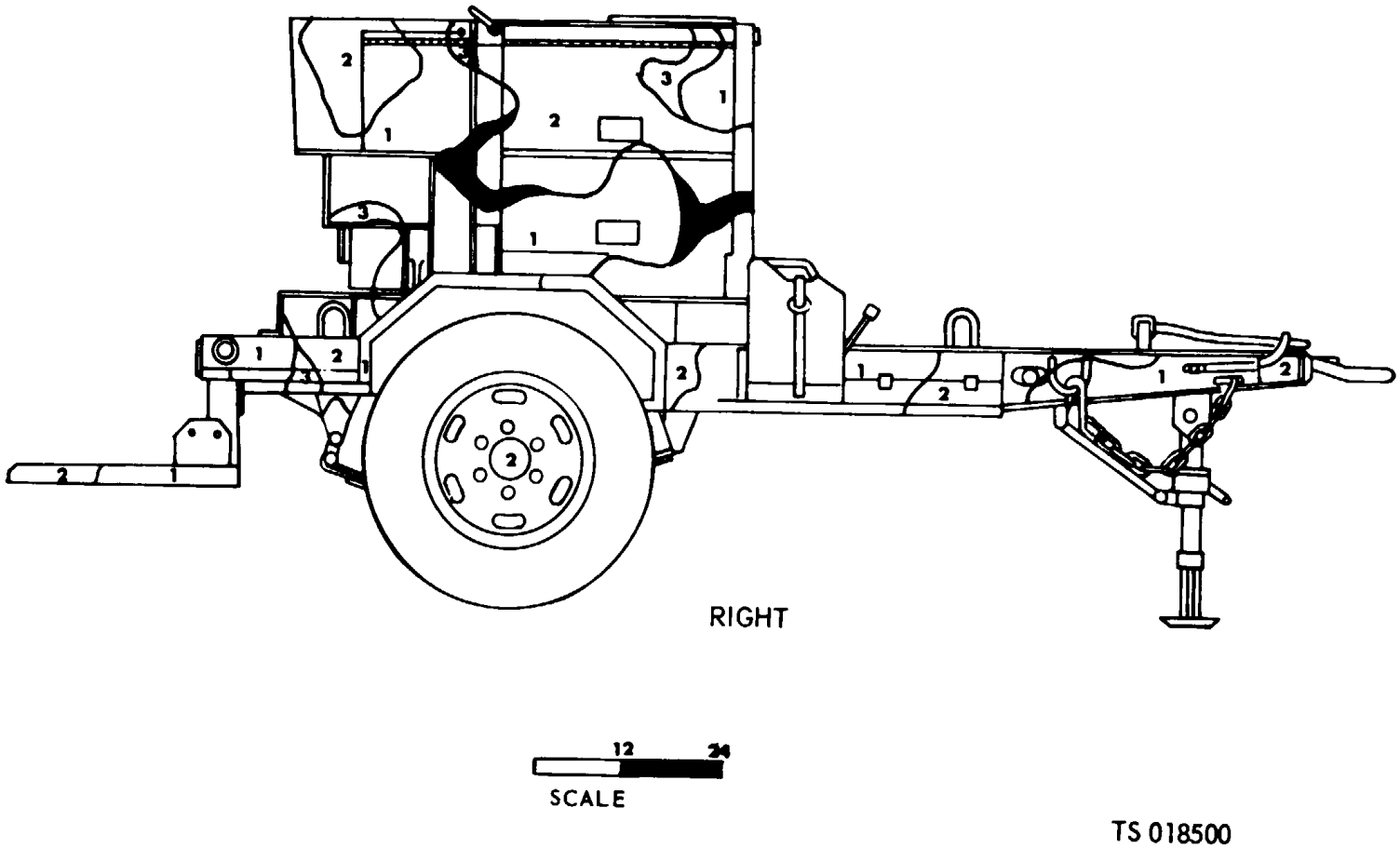

Figure 3-21. M200A1 2-1/2T Trailer PU-405 /M (sheet 2 of 3).

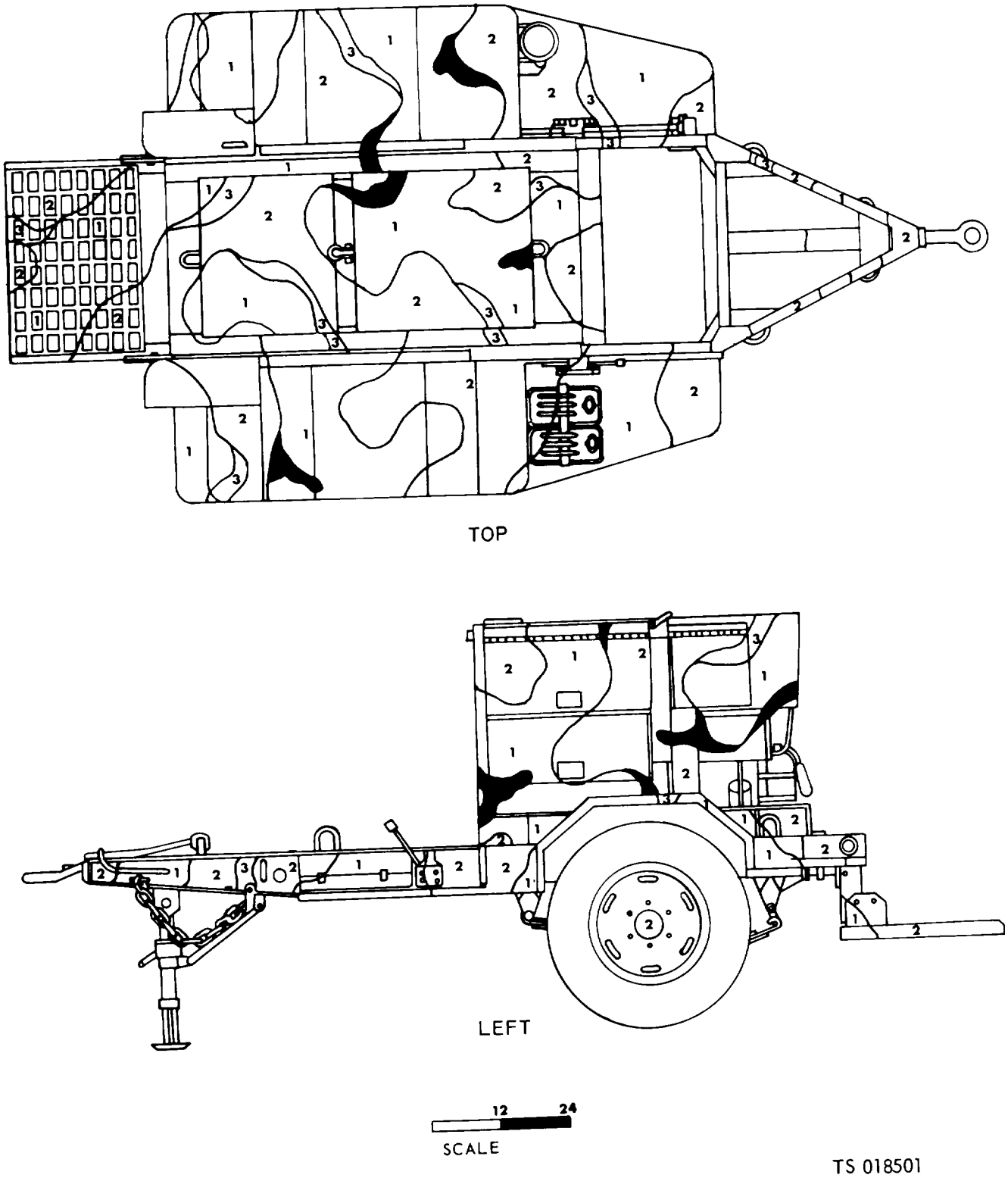

Figure 3-21. M200A1 2-1 2T trailer PU-405/M (sheet 3 of 3).

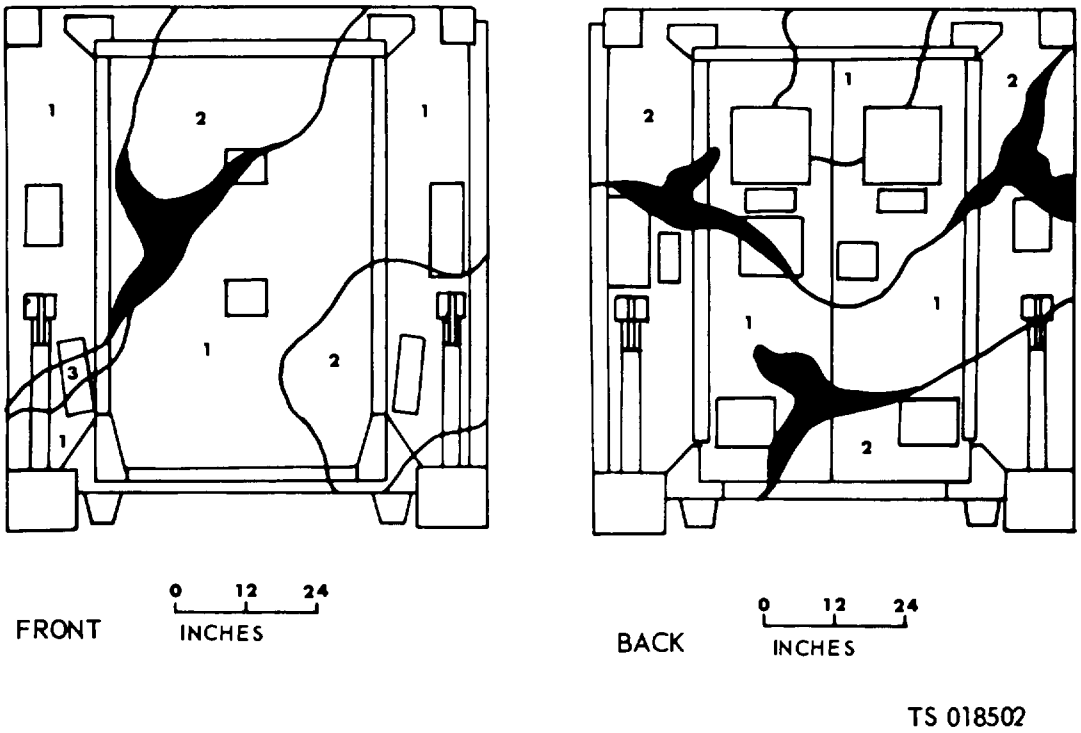

Figure 3-22. Demineralizer, Ion exchange;. 300 gph shelter (mtd) (sheet 1 of 2).

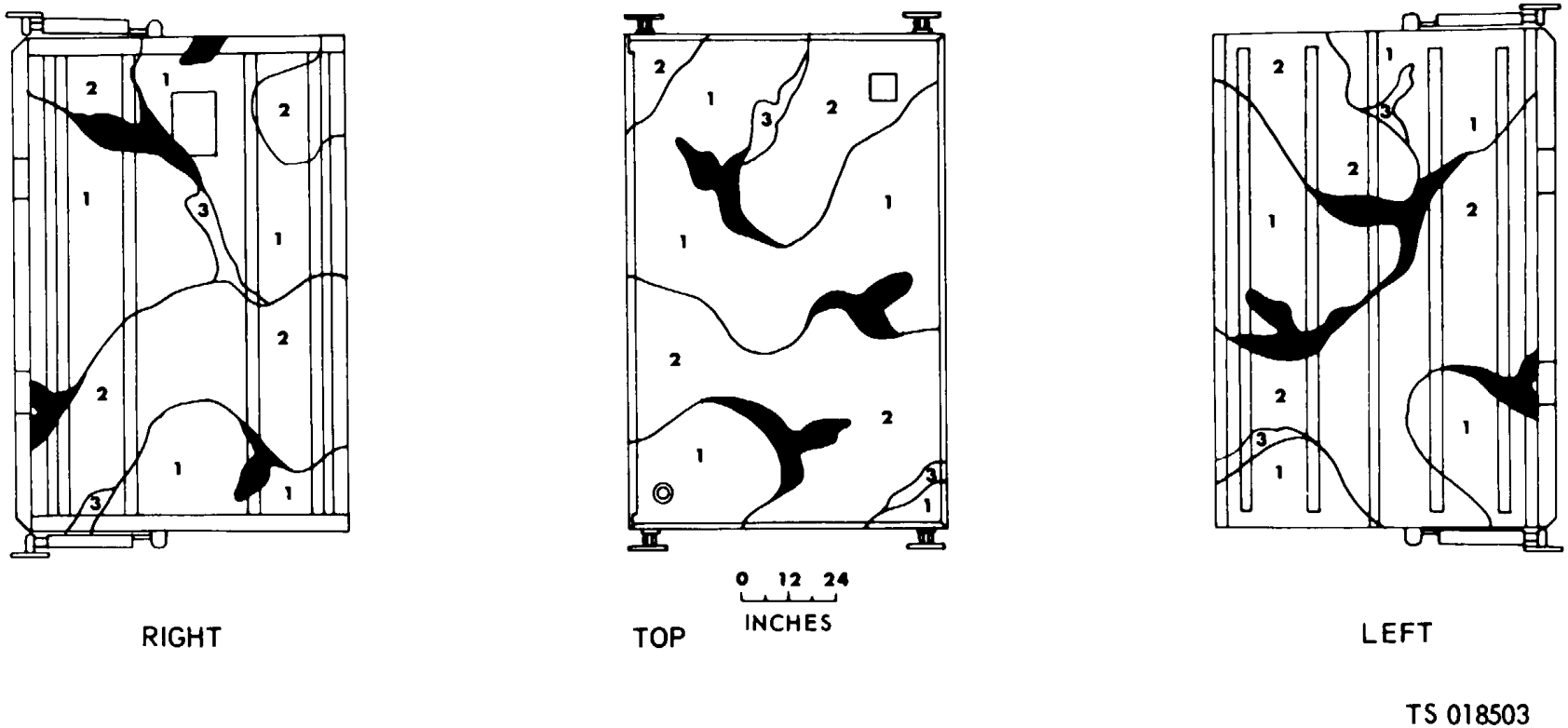

Figure 3-22. Demineralizer, Ion exchange;. 300 gph shelter (mtd) (sheet 2 of 2).

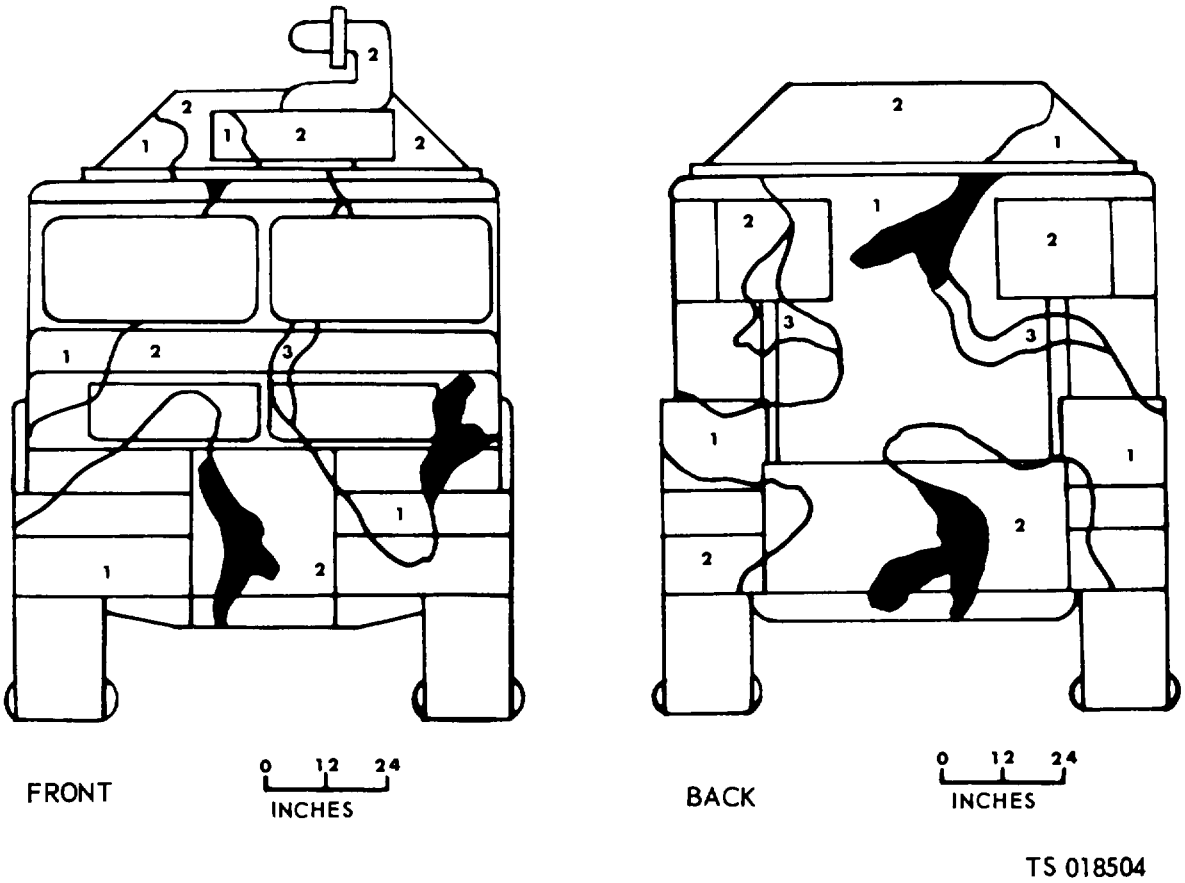

Figure 3.-23. Truck, fire, military class 1500 (sheet 1 of 3).

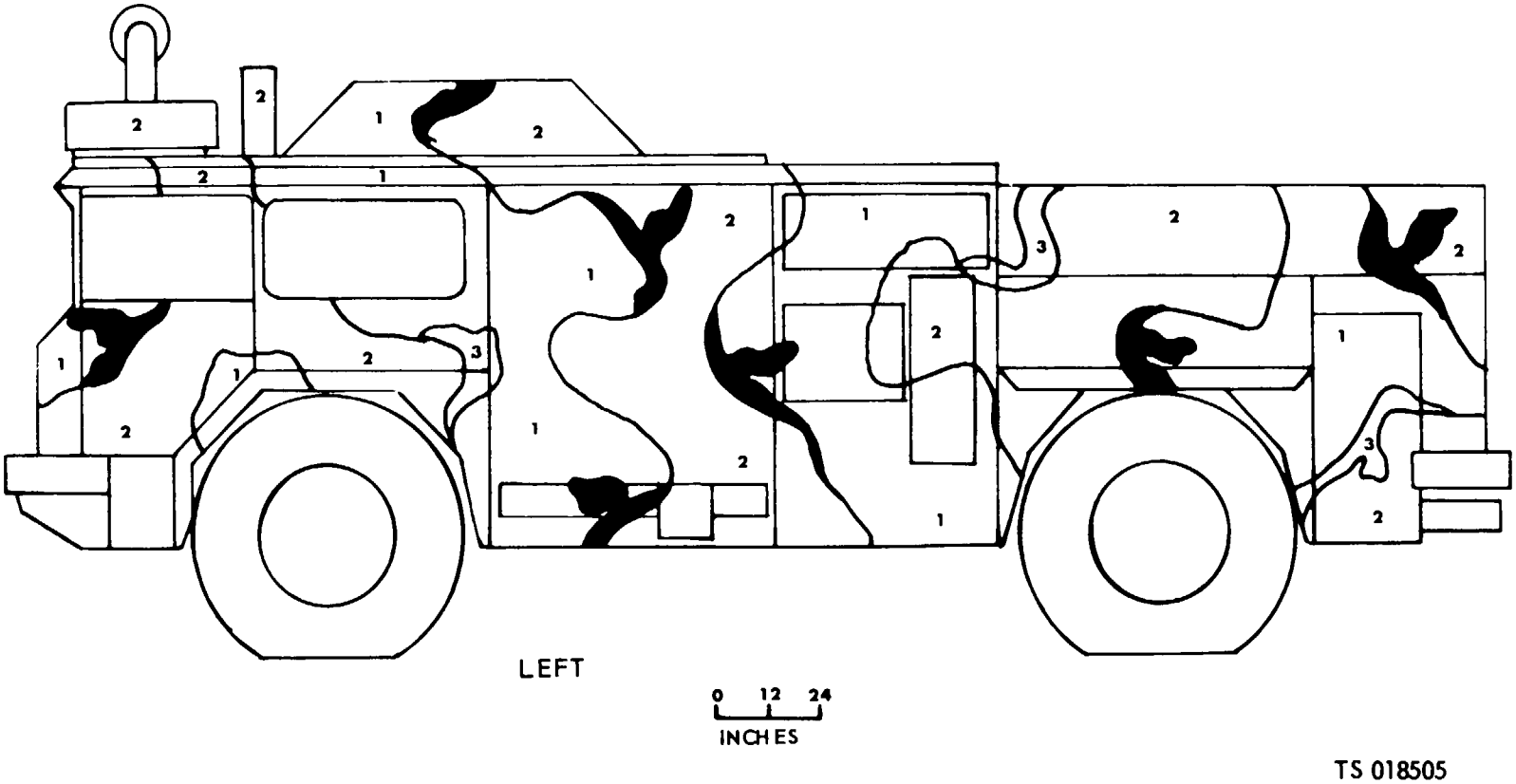

Figure 3-23. Truck, fire. military class 1500 (sheet 2 of 3).

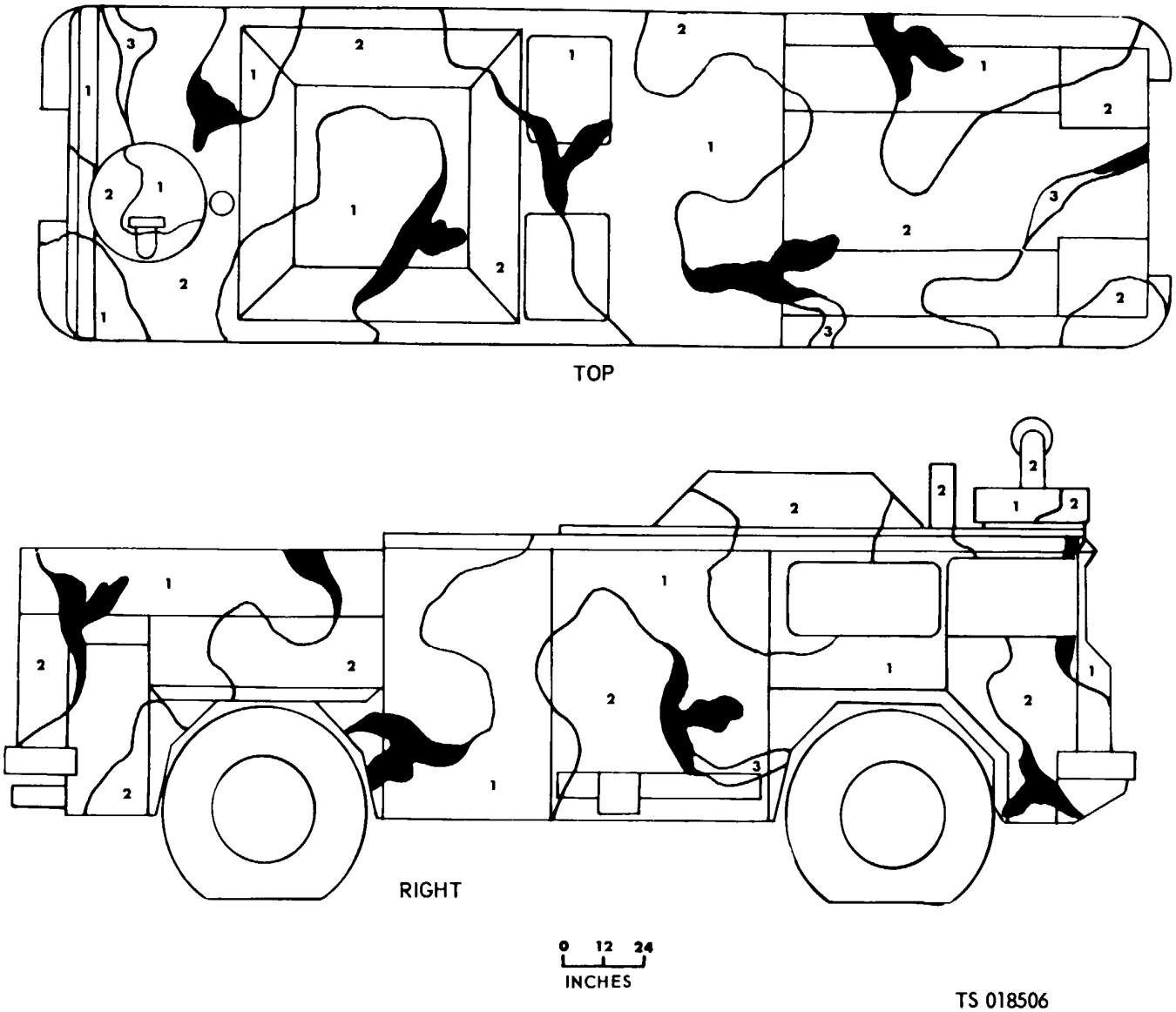

Figure 3-23. Truck. fire, military class 1500 (sheet 3 of 3).

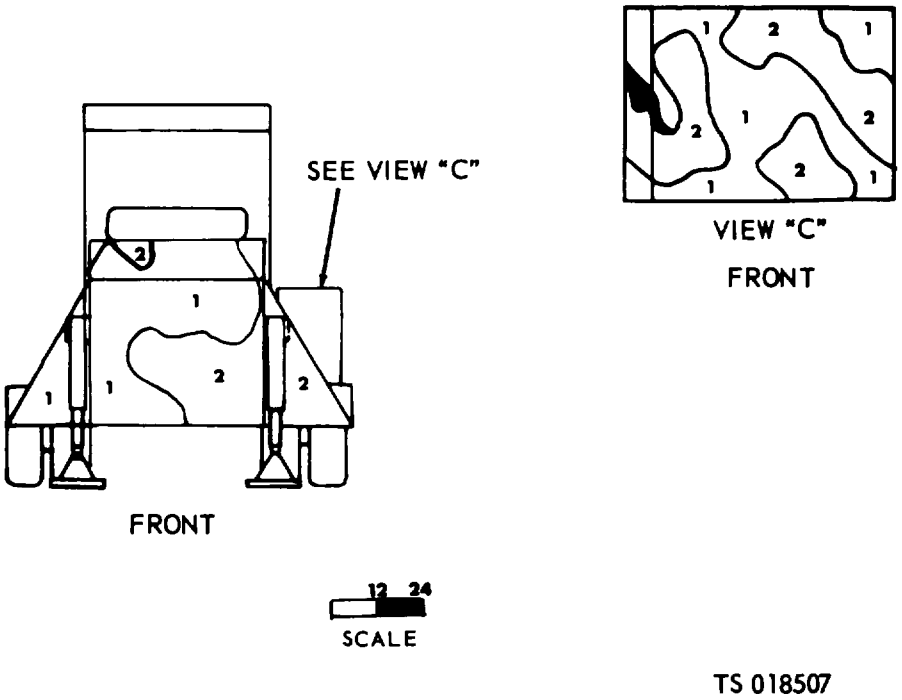

Figure 3-24. Semi-trailer, 15 low bed AN/MJQ-11 (sheet 1 of 3).

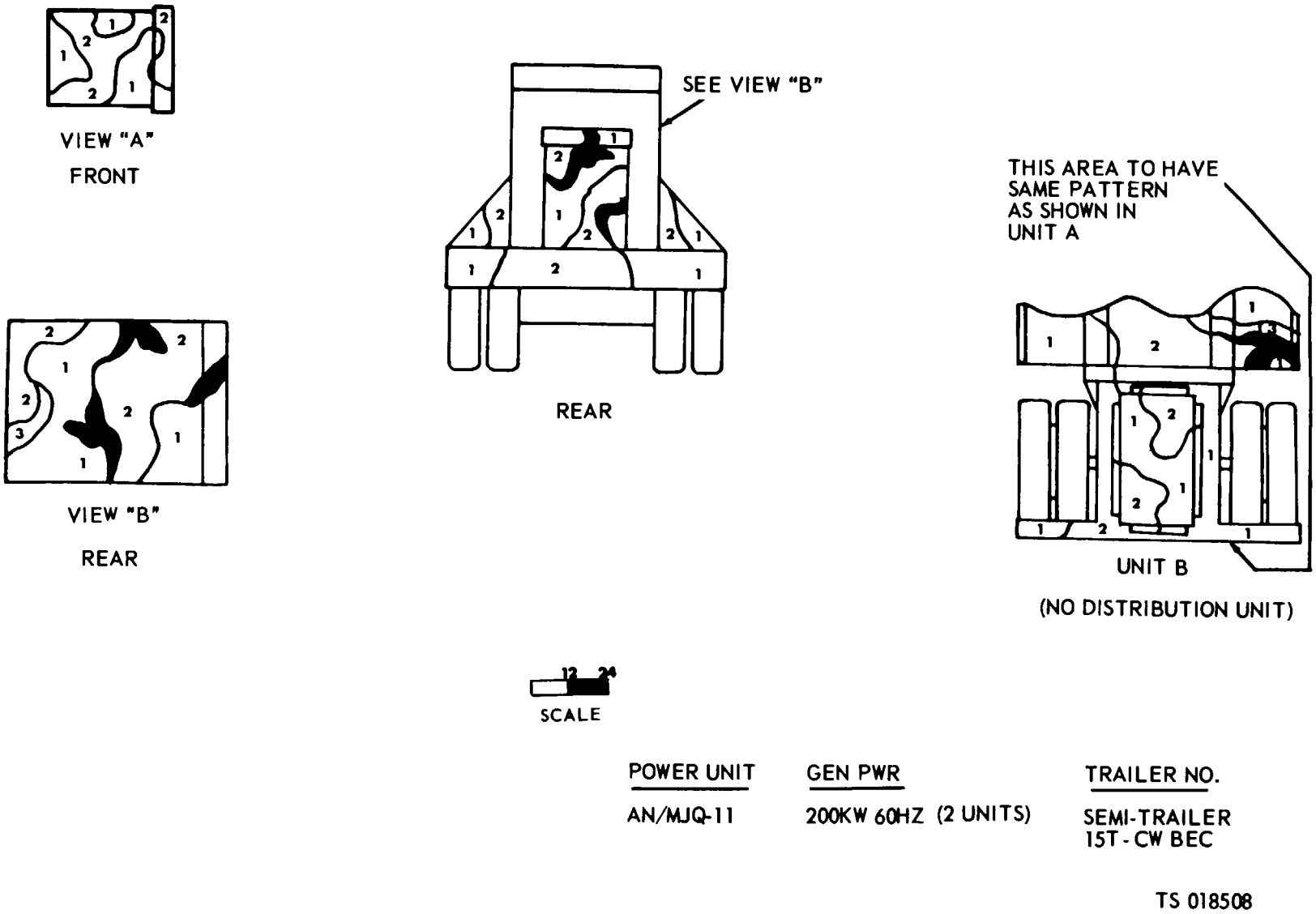

Figure 3-24. Semi-trailer, 15 low bed AN/MJQ-11 (sheet 2 of 3).

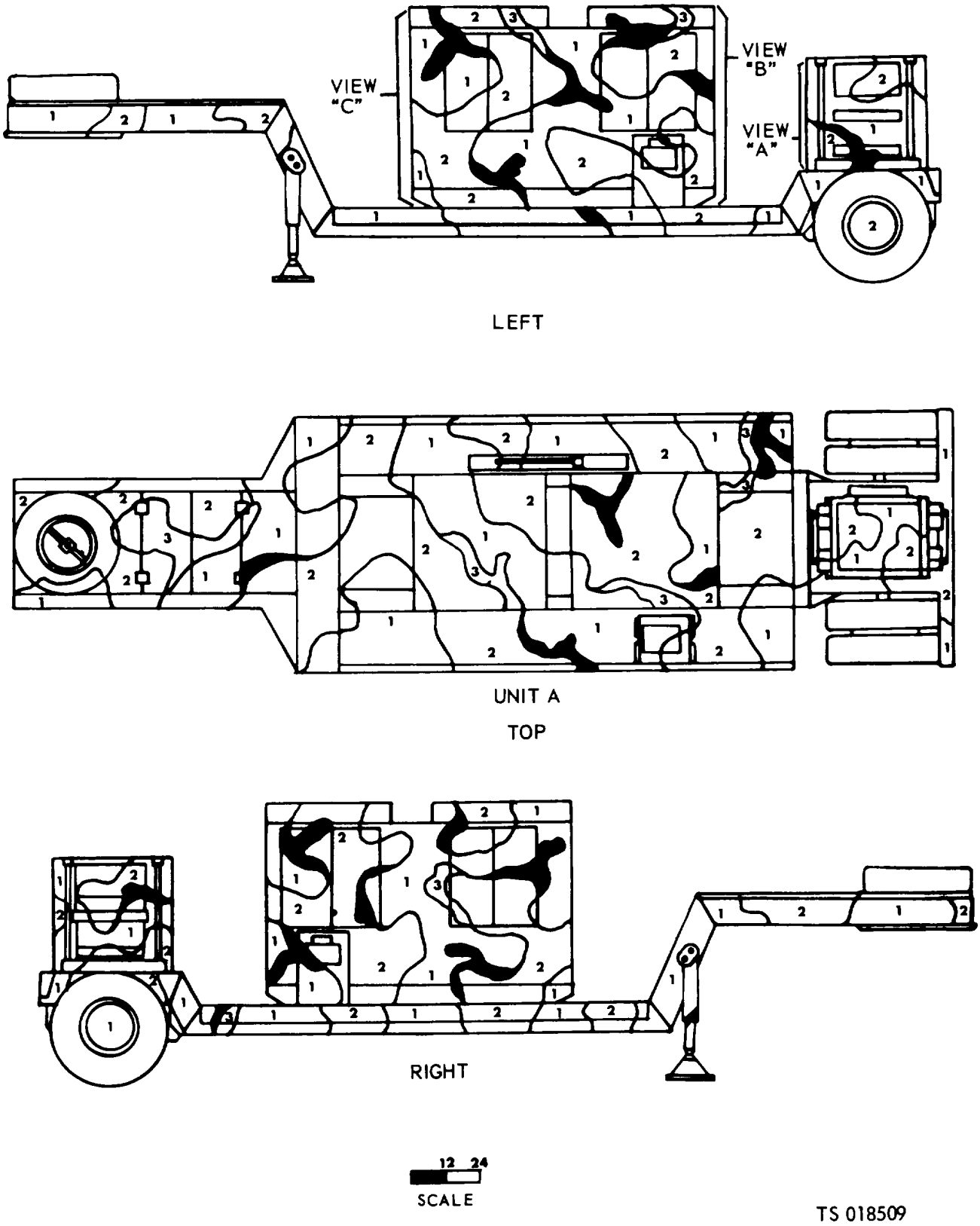

Figure 3-24. Semi-trailer, 15 low bed AN/MJQ-11 (sheet 3 of 3).

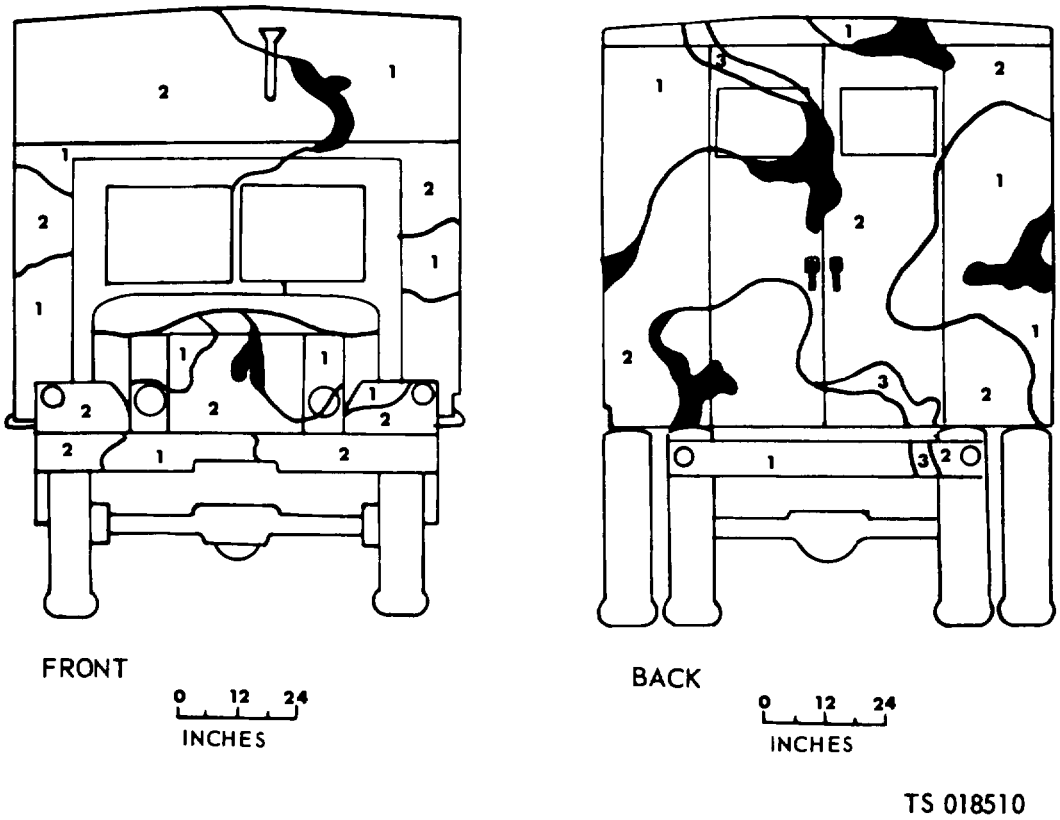

Figure 3-25. Water purification, unit: 3000 gph (van body mtd) (sheet 1 of 3).

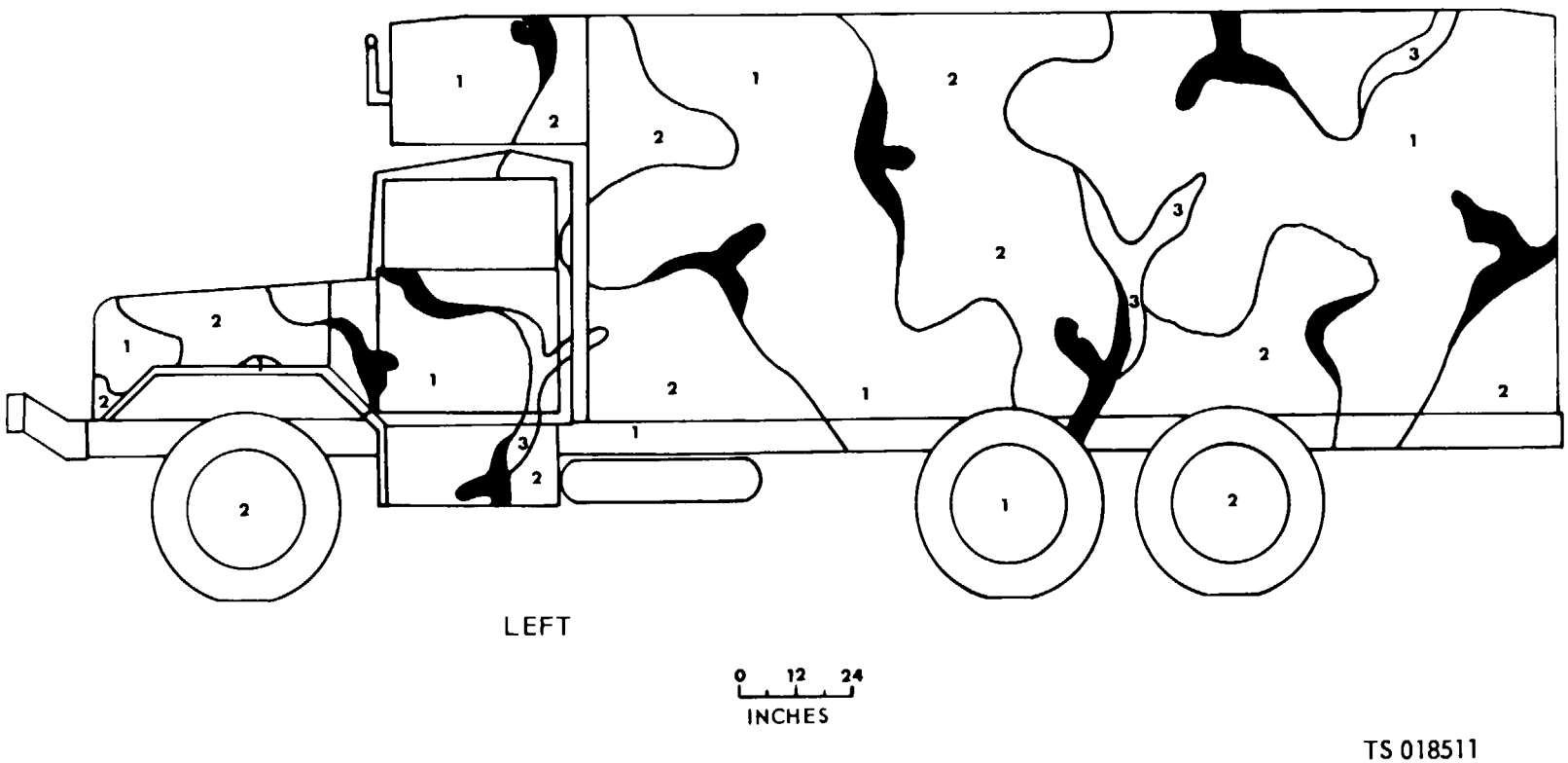

Figure 3-25. Water purification, unit: 3000 gph (van body mtd) (sheet 2 of 3).

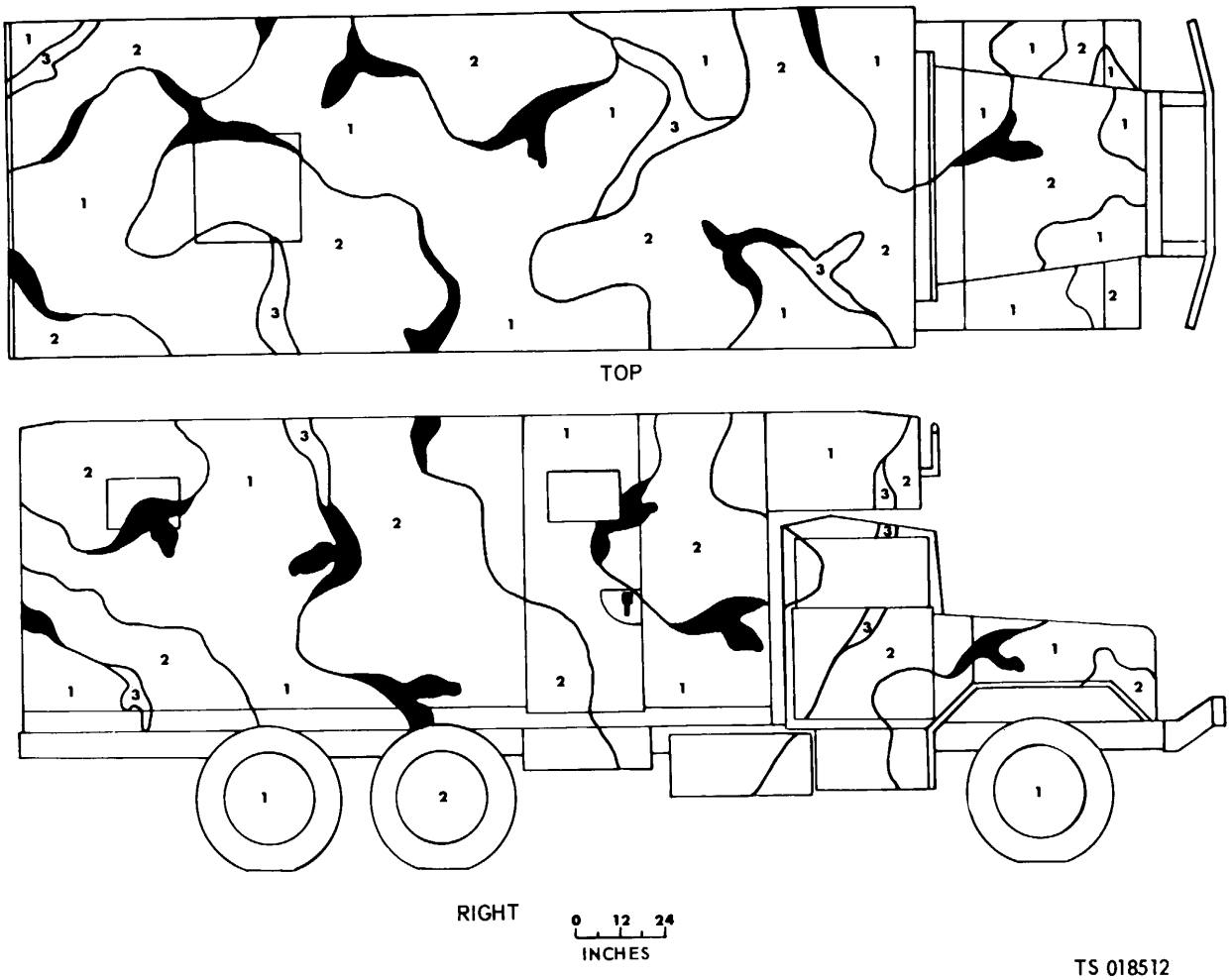

Figure 3-25. Water purification unit: 3000 gph (van body mtd) (sheet 3 of 3).

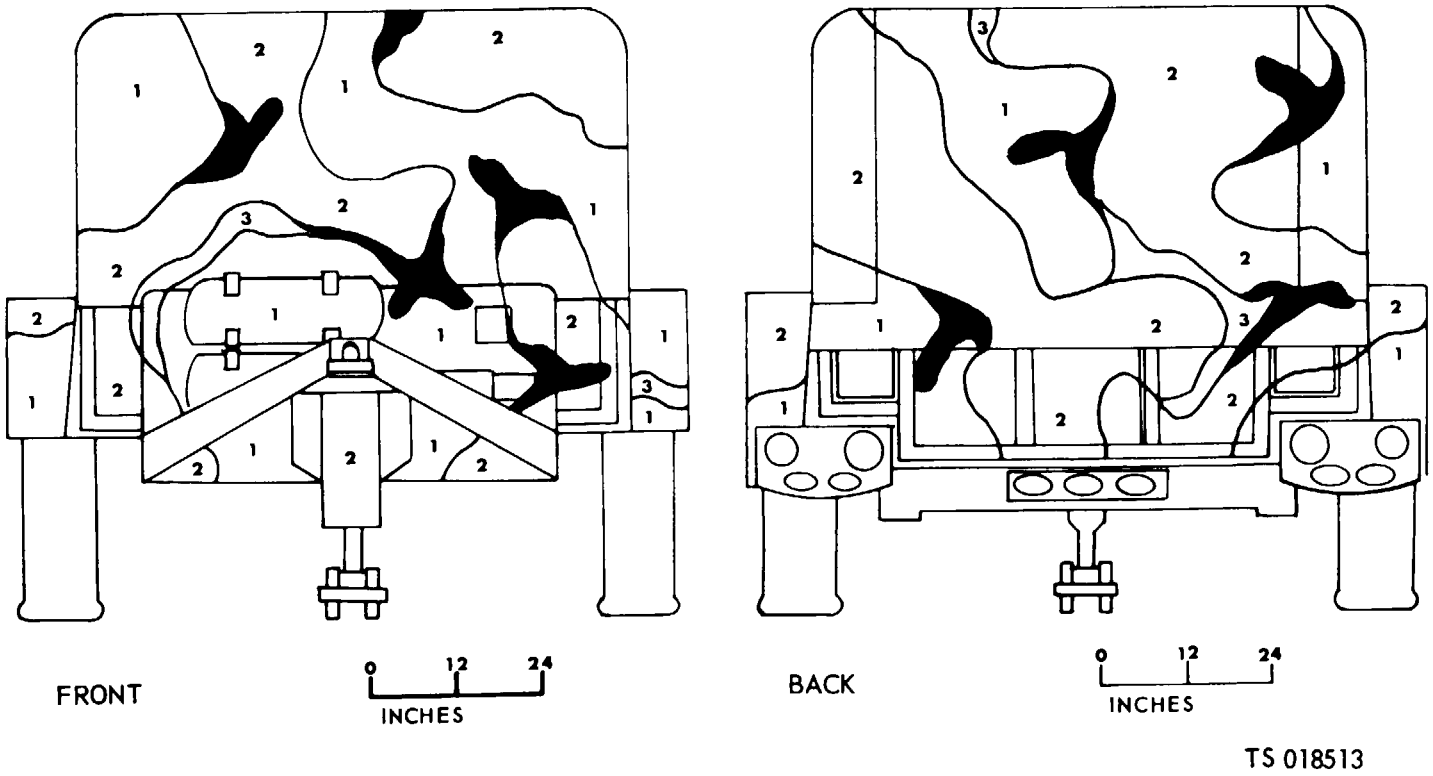

Figure 3-26. Water purification unit 600 gph or lubricating service unit (sheet 1 of 3).

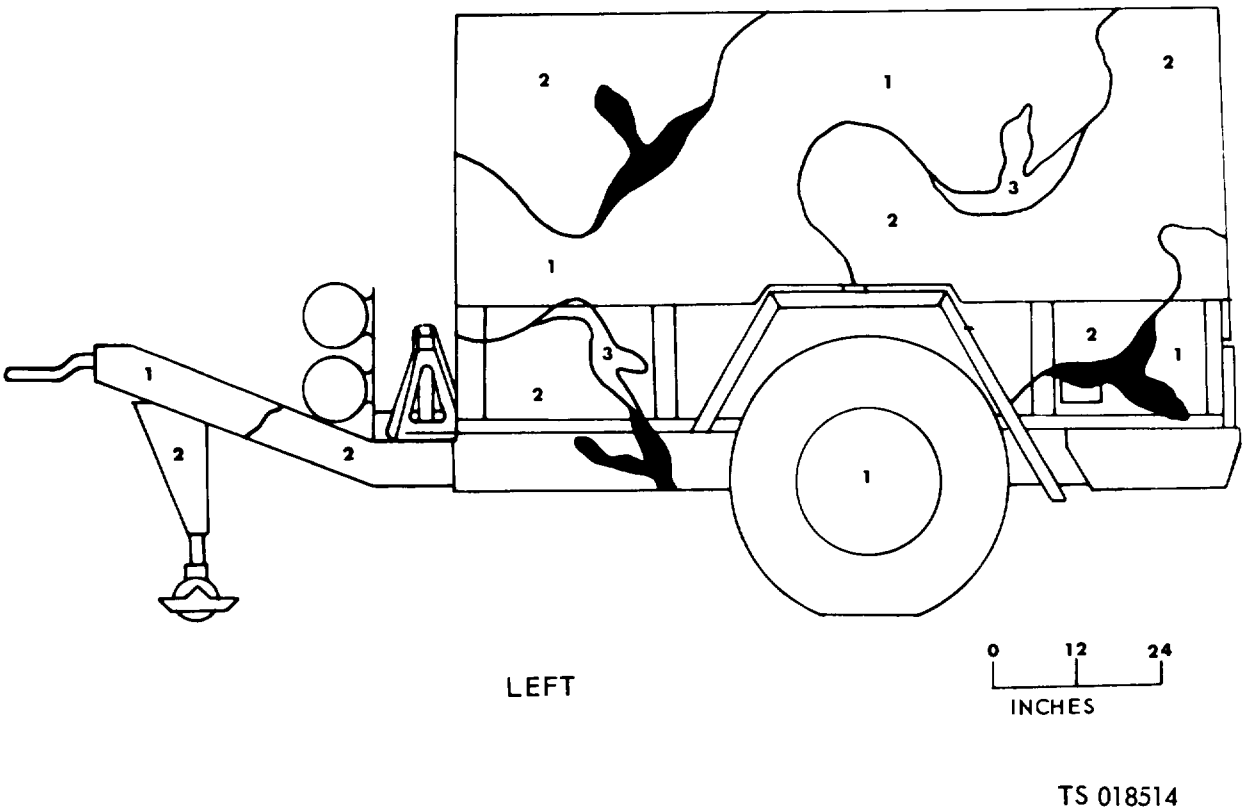

Figure 3-26. Water purification unit 600 gph or lubricating service unit (sheet 2 of 3).

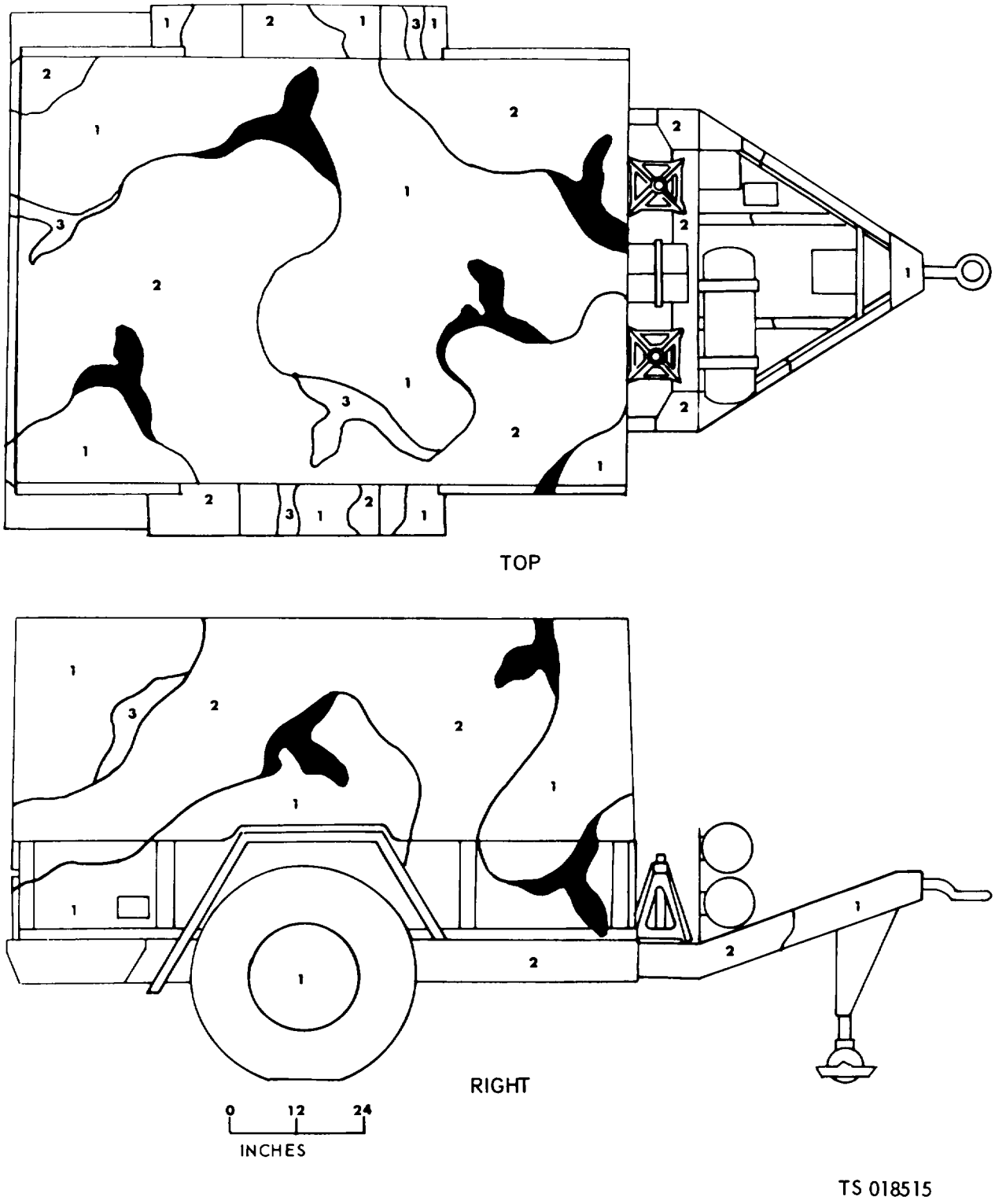

Figure 3-26. 'Water purification unit 600 gph or lubricating service unit (sheet 3 of 3).

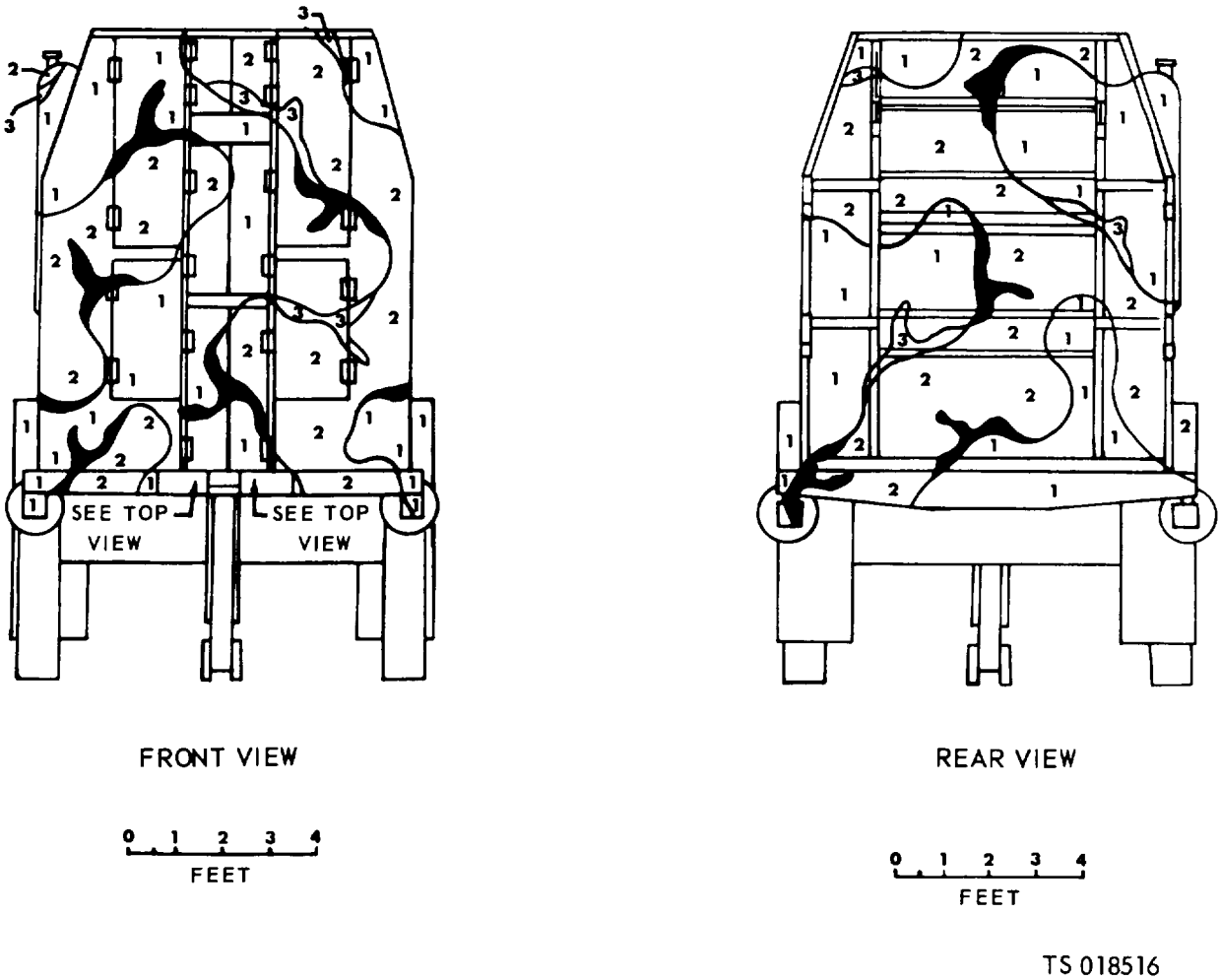

Figure 3-27. Bakery oven, trailer mounted, M-533 (sheet 1 of 2).

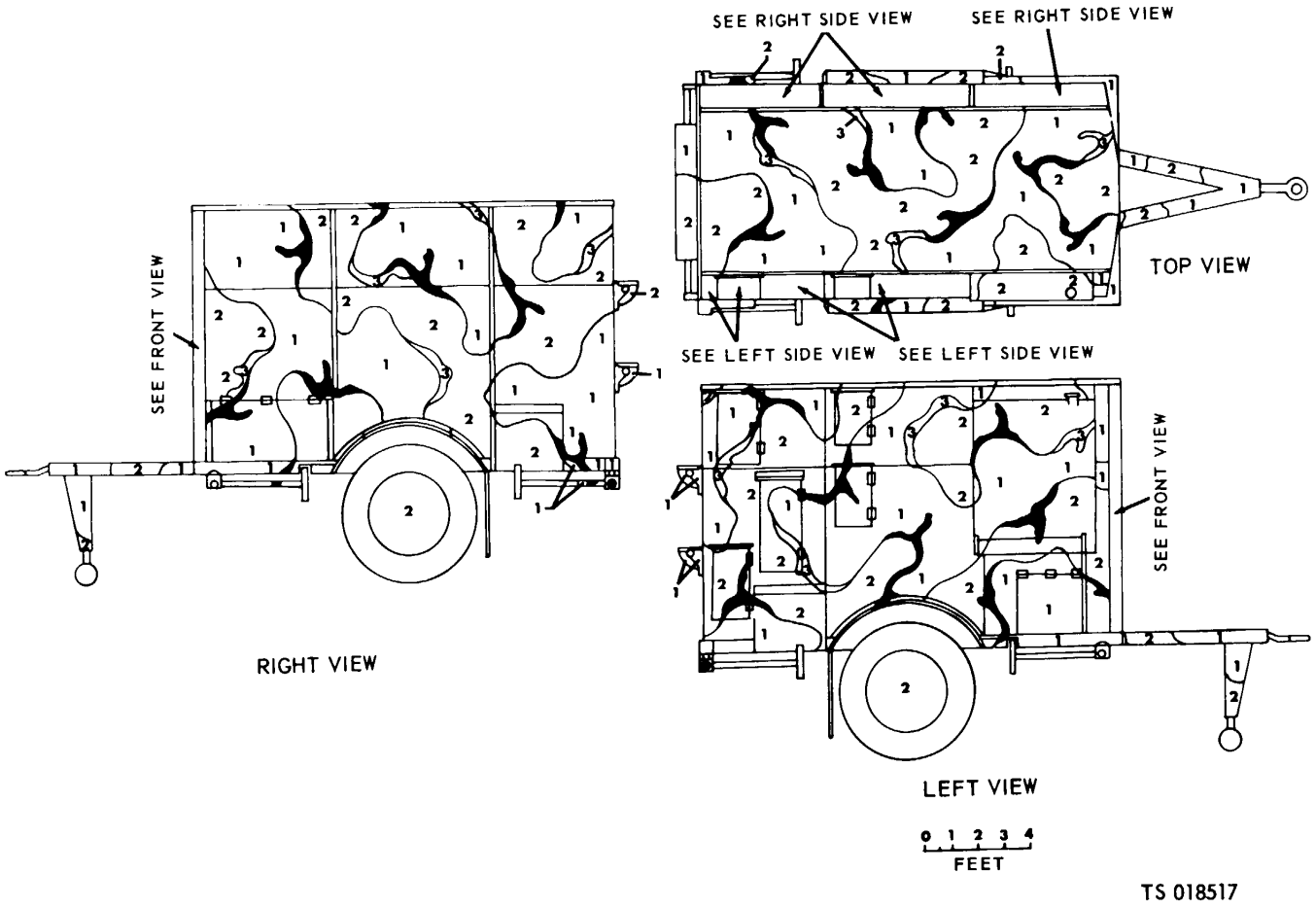

Figure 3-27. Bakery oven trailer mounted, M-533 (sheet 2 of 2).

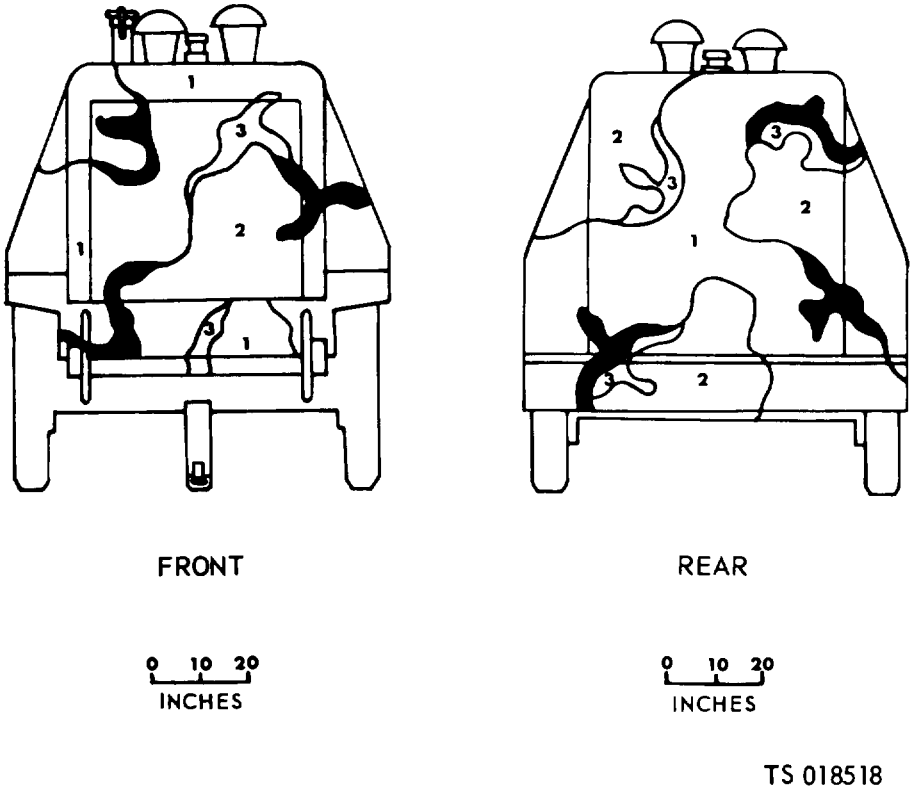

Figure 3-28. Compressor air MIL-C-555 (sheet 1 of 2).

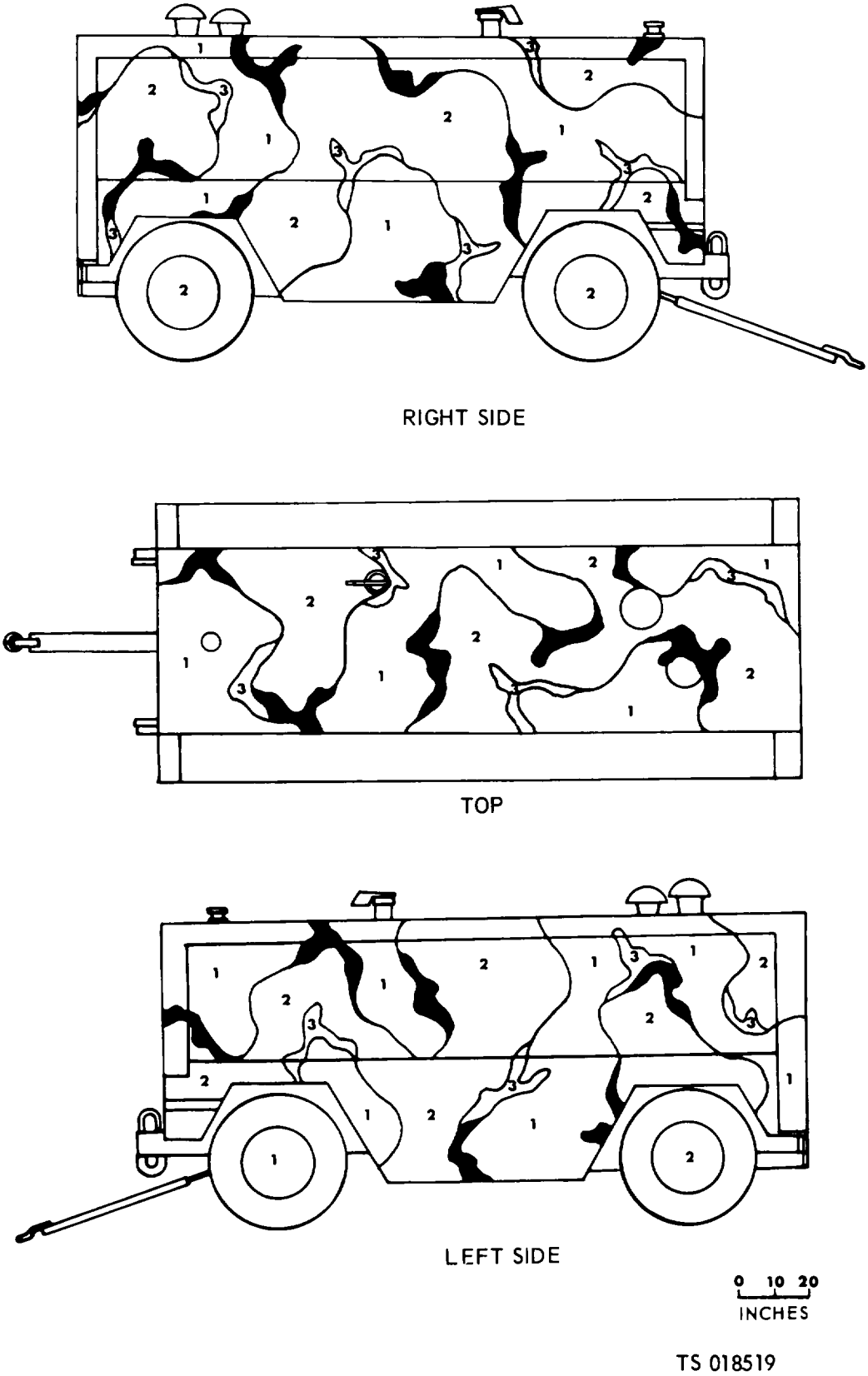

Figure 3-28. Compressor air MIL-C-555 (sheet 2 of 2).

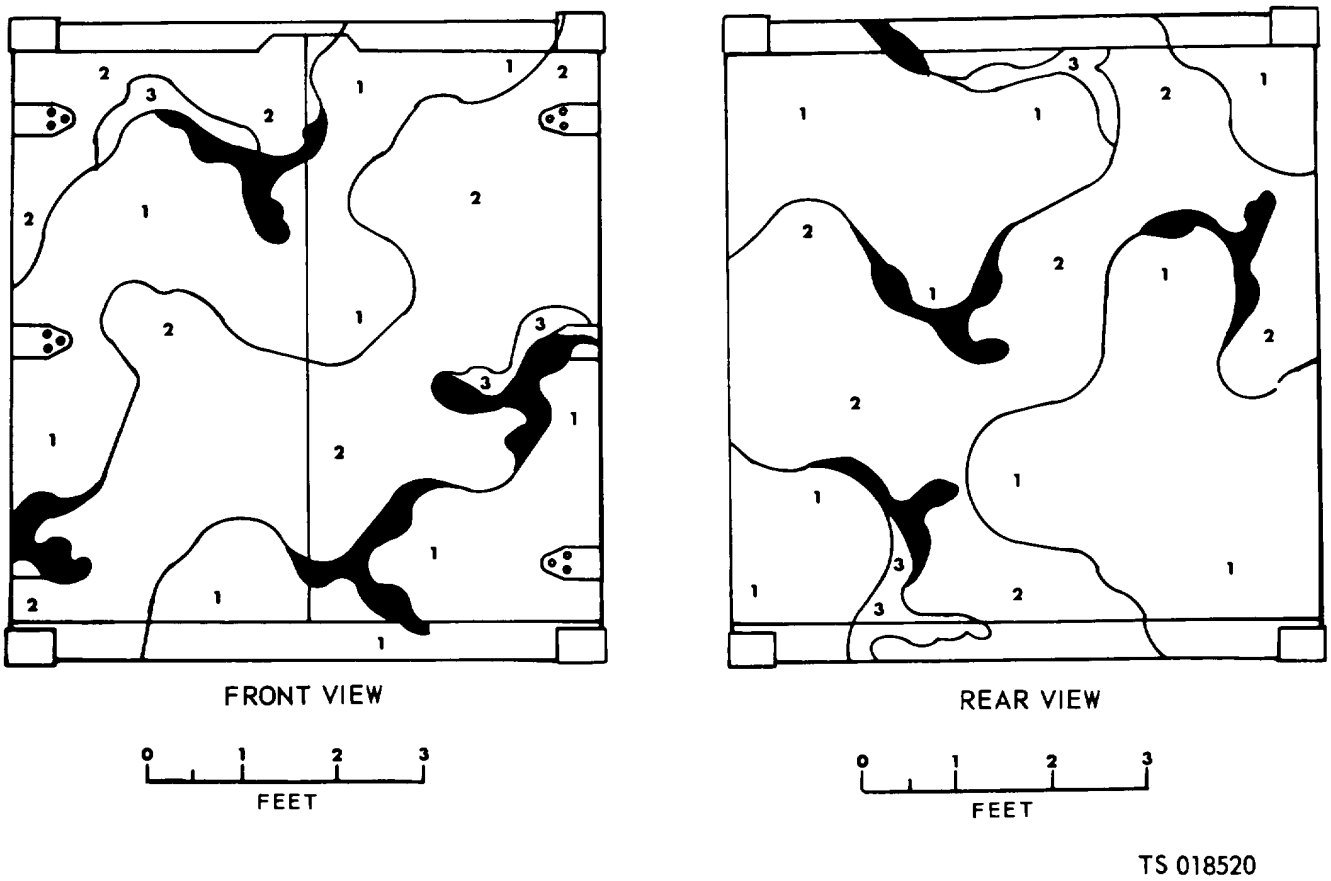

Figure 3-29. Conex Container MIL-B-21560, Type I (sheet 1 of 2).

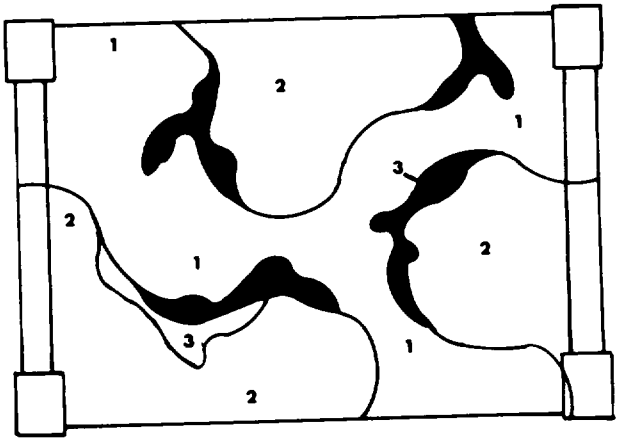

TOP VIEW

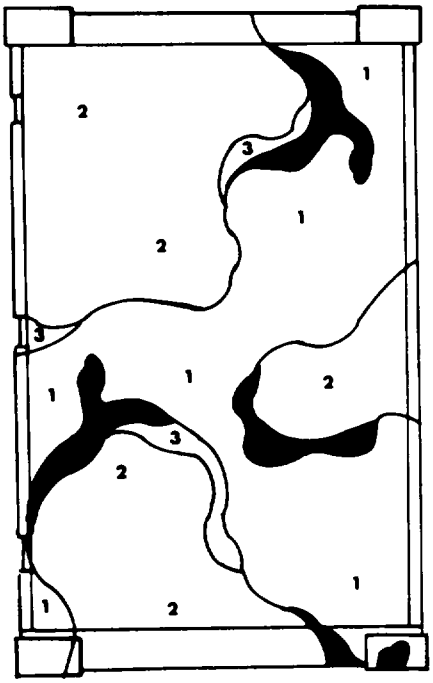

RIGHT VIEW

0 1 2 3

FEET

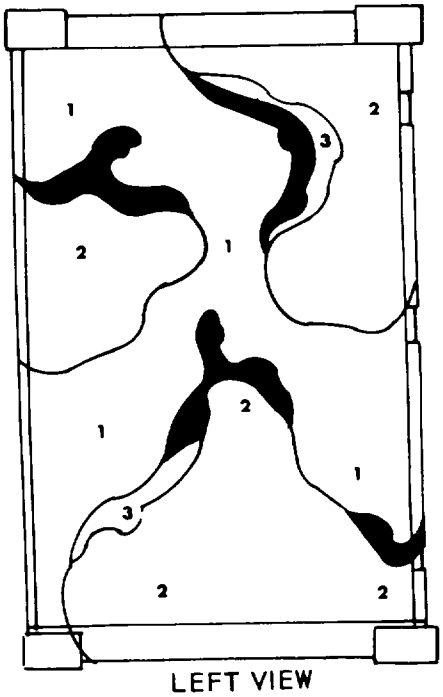

LEFT VIEW

0 1 2 3

FEET

TS 018521

Figure 3-29. Conex container MIL-B-21560, Type I (sheet 2 of 2).

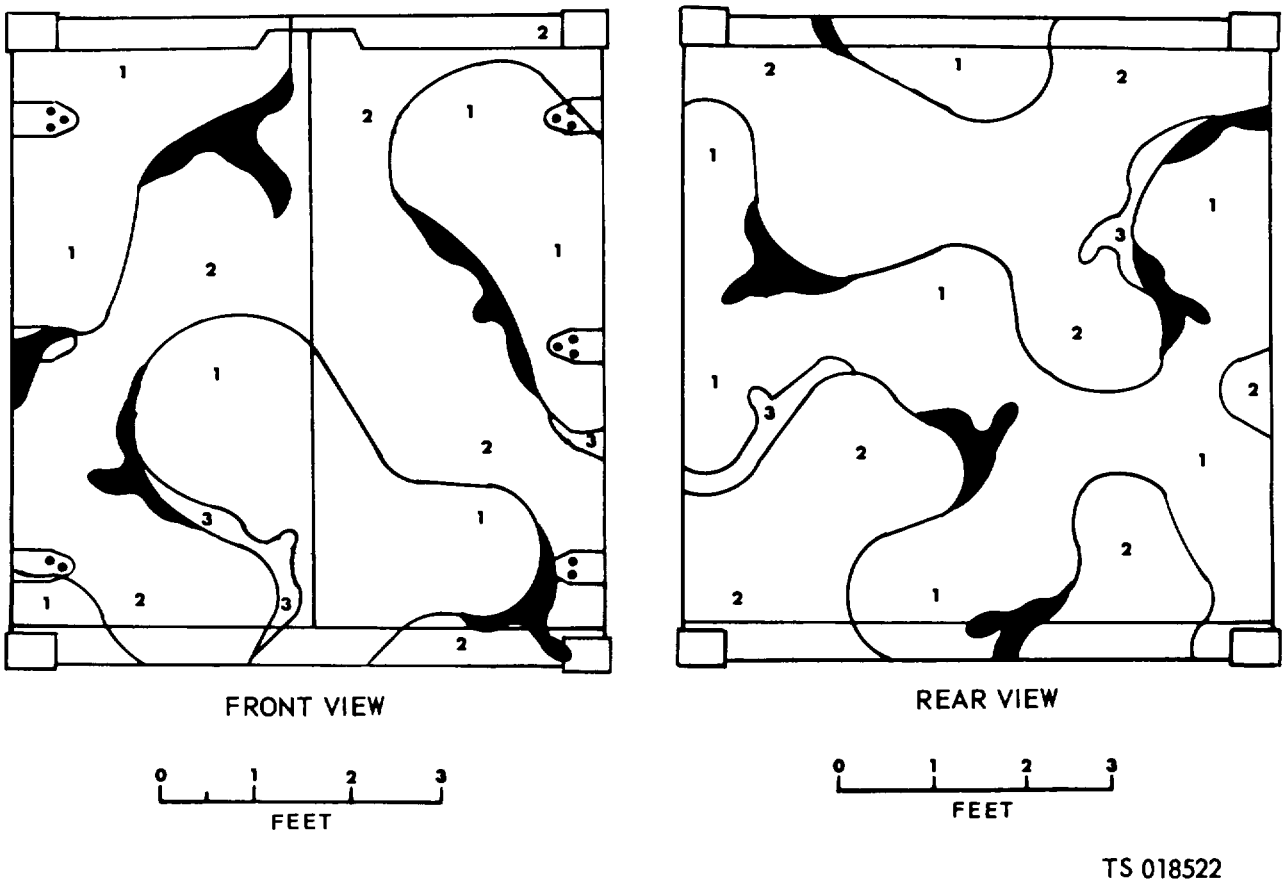

Figure 3-30. Conex container MIL-B-21560. Type II (sheet 1 of 2)

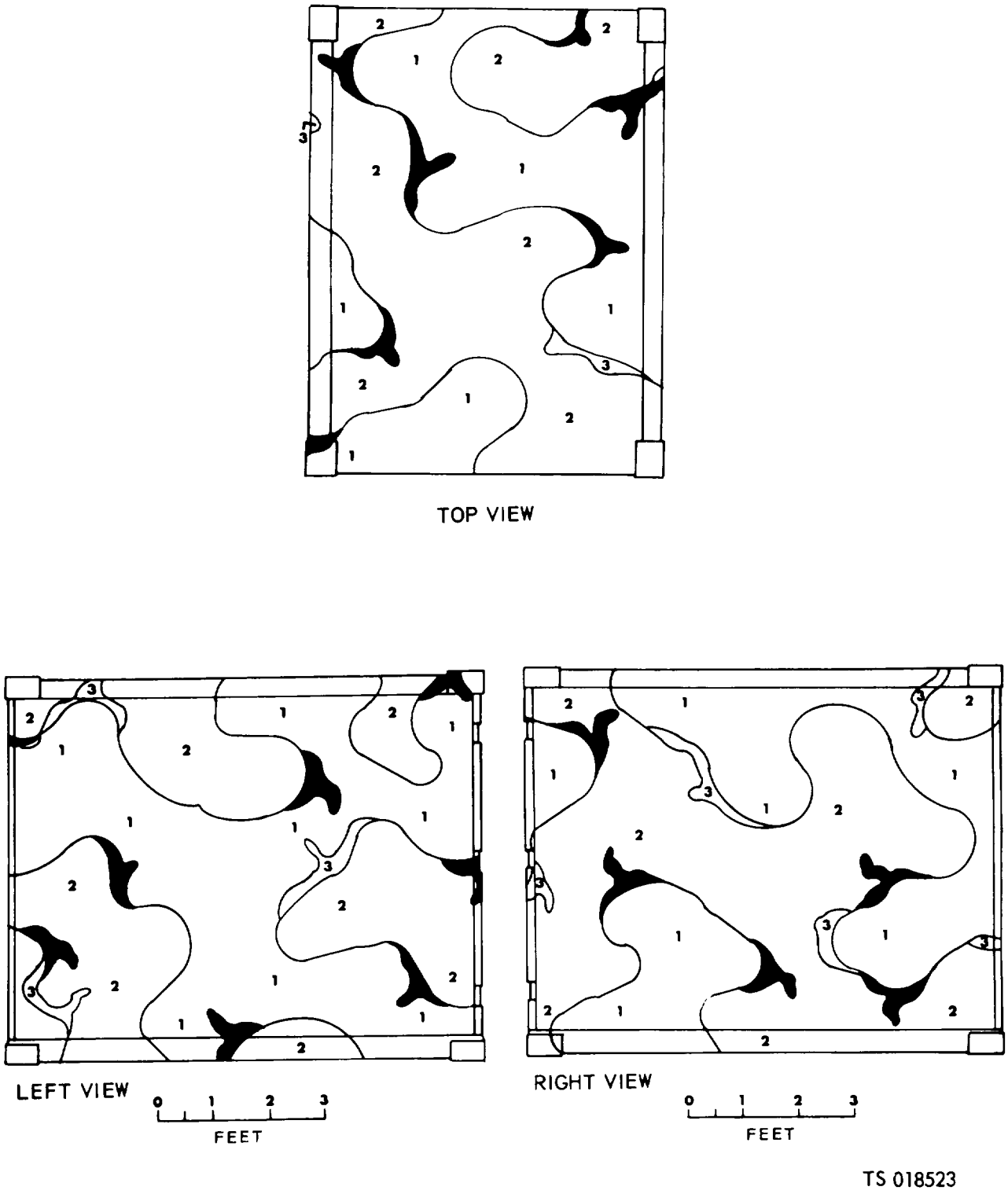

Figure 3-30. Cortex container MIL-B-21560. Type II (sheet 2 of 2).

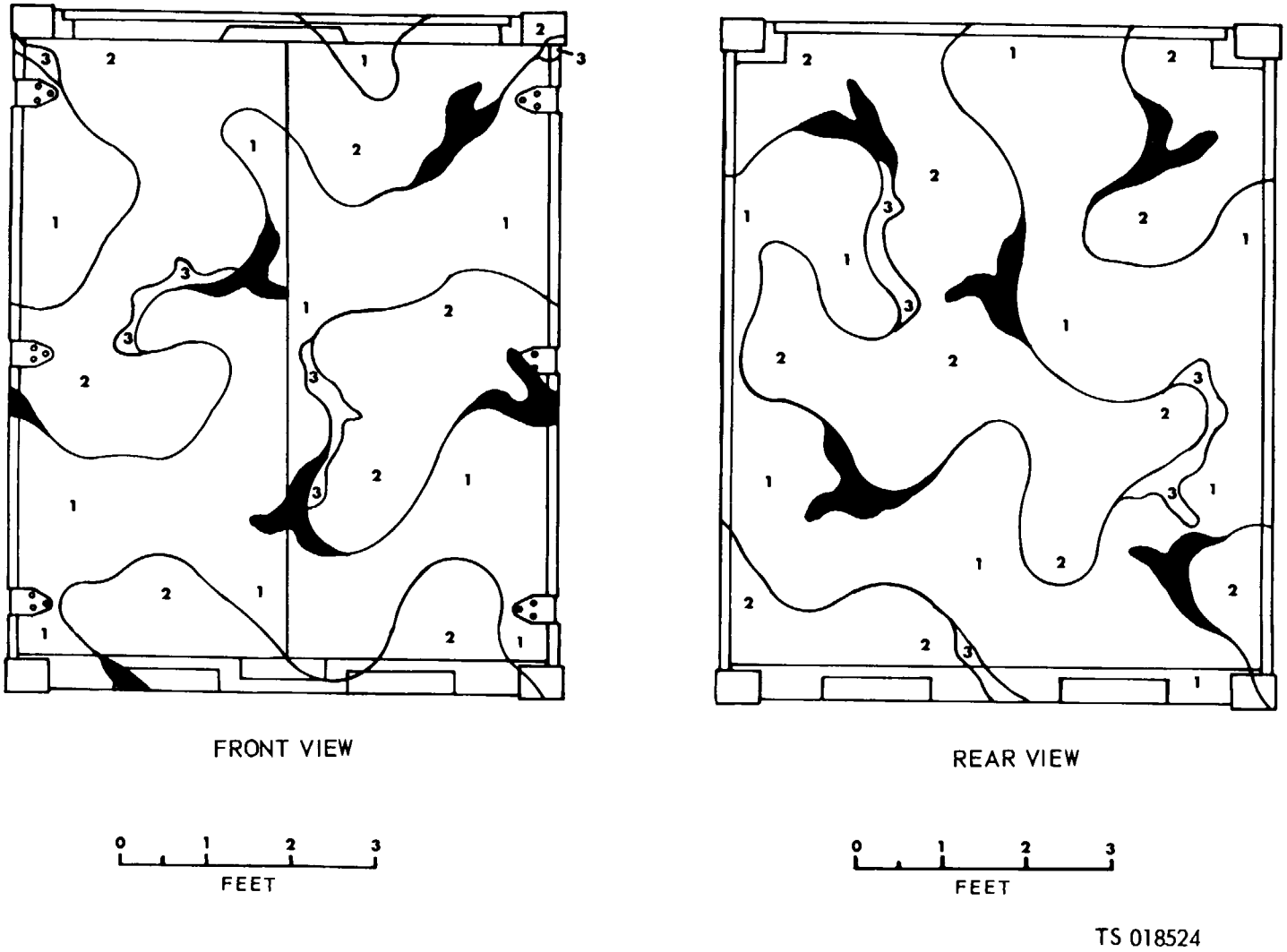

Figure 3-31. Container, Tricon MIL-B-11886 (sheet 1 of 2).

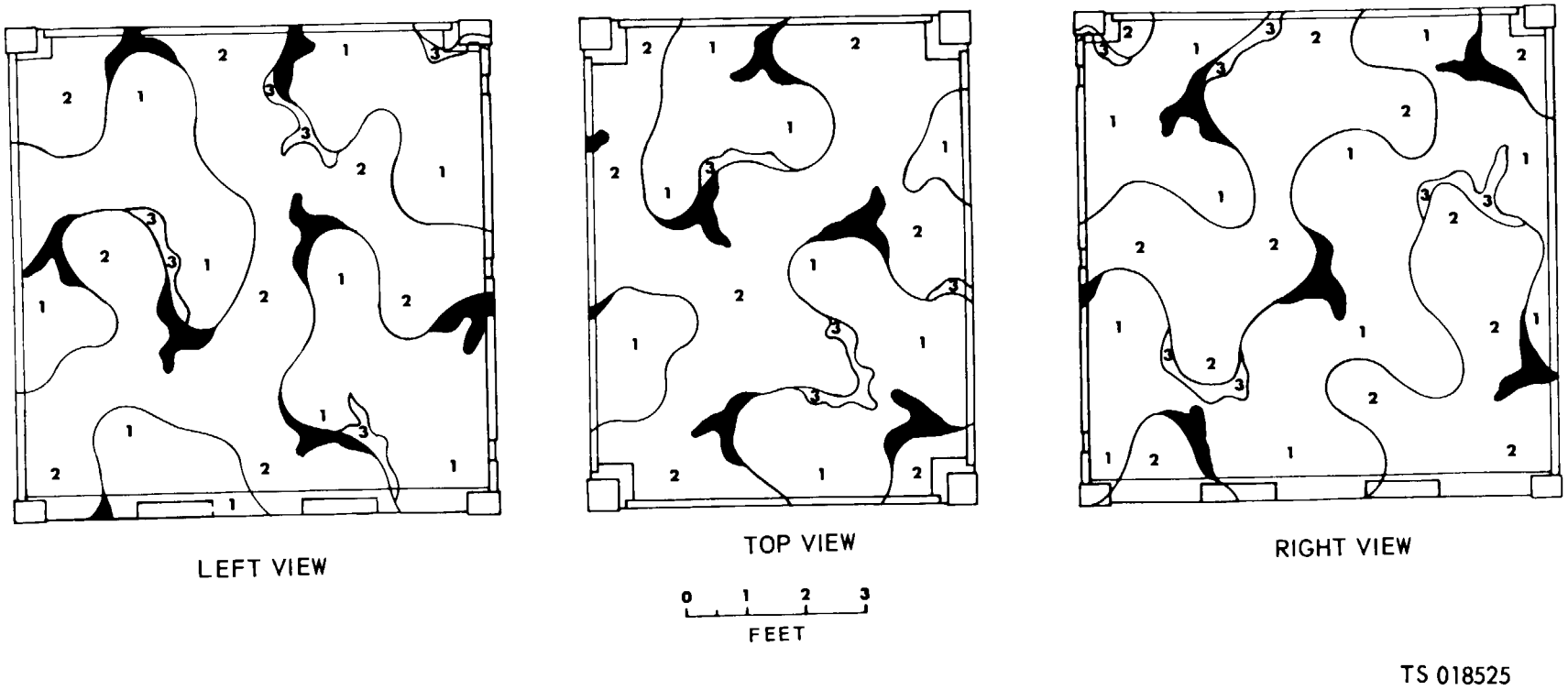

Figure. 3-1. Container, Tricon MIL-B-11866 (sheet 2 of 2).

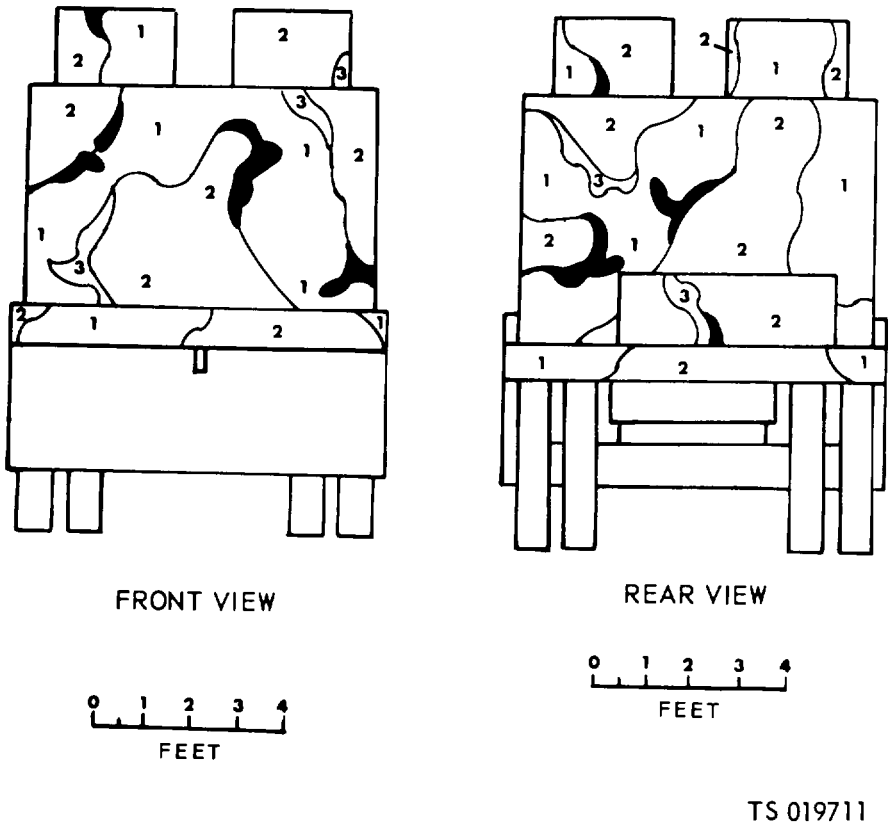

Figure 3-32. Cooling tower. liquid. semitrailer (sheet 1 of 3).

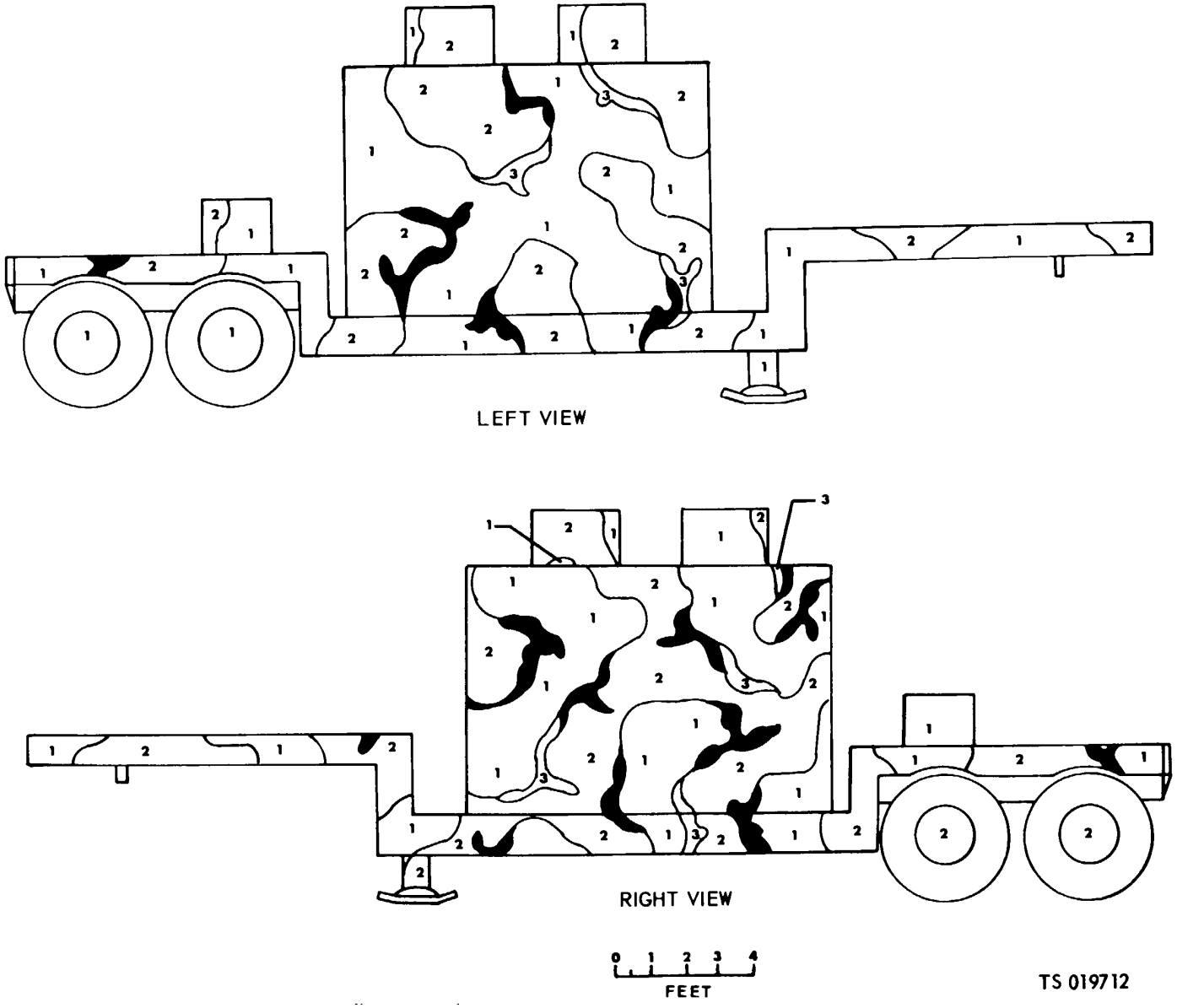

Figure 3-32. Cooling tower. liquid. semitrailer (sheet 2 of 3).

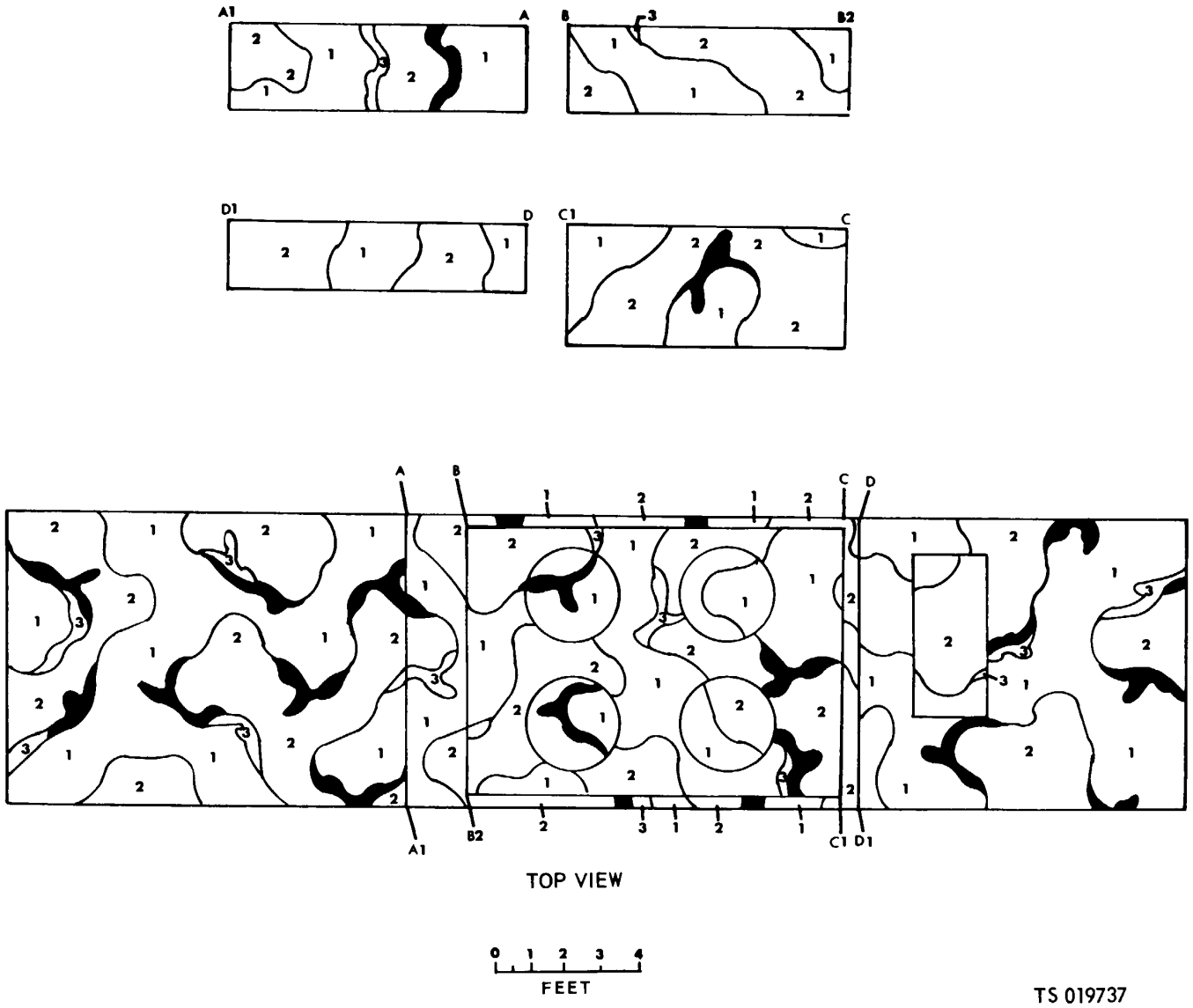

Figure 3-32. Cooling tower, liquid, semitrailer (sheet 3 of 3).

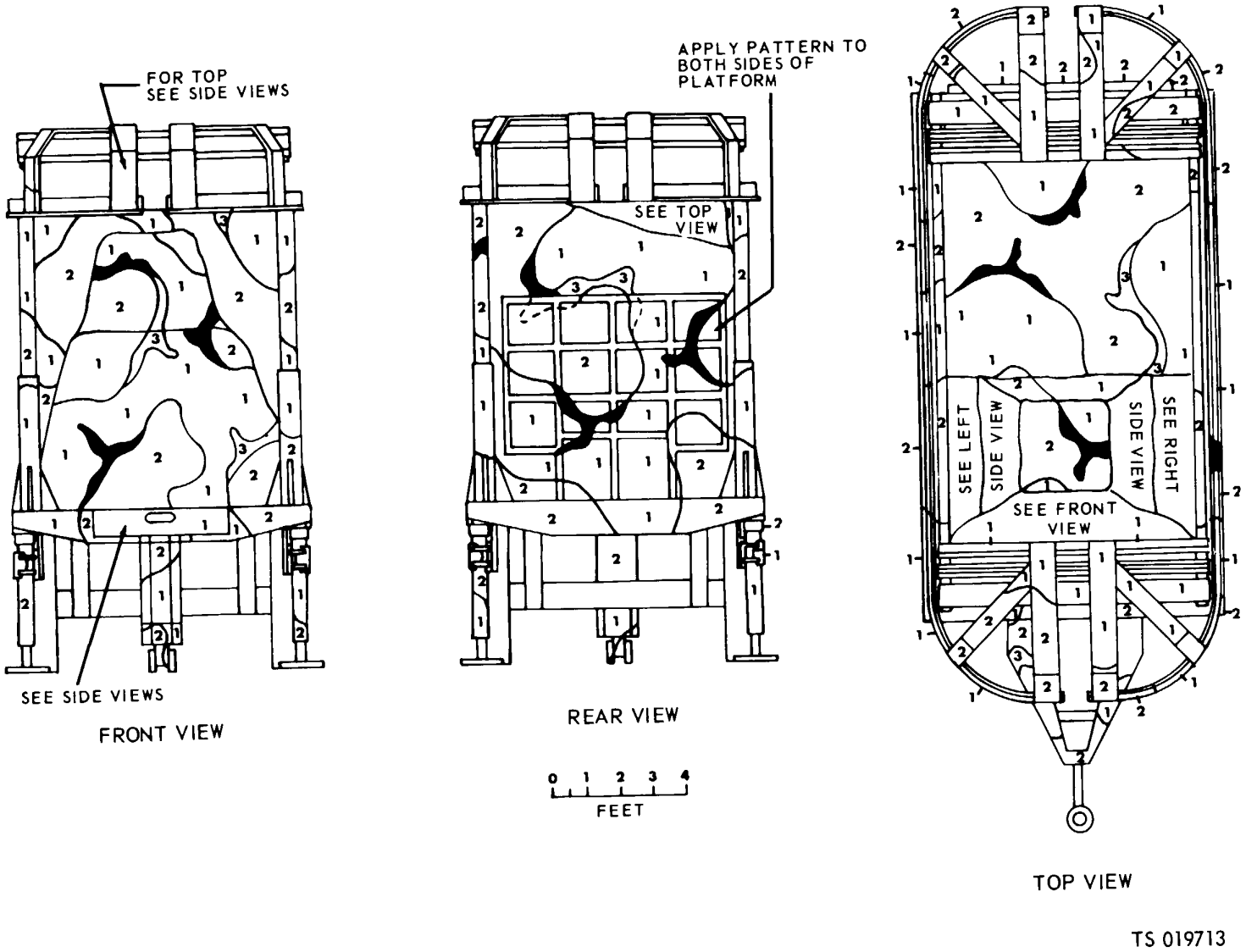

Figure 3-33. Dough mixing and makeup outfit trailer mounted, M534 (sheet 1 of 2).

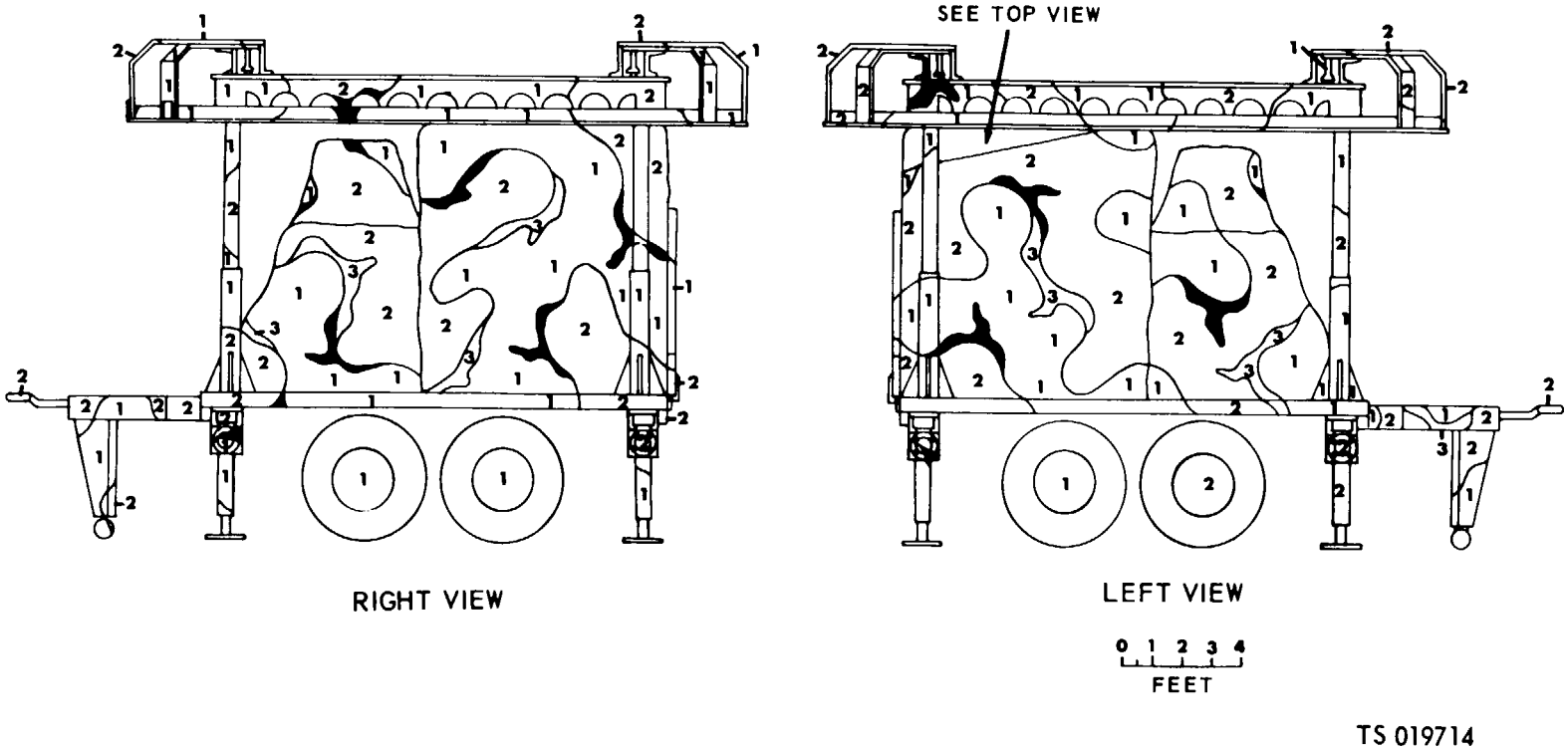

Figure 3-33. Dough mixing and makeup outfit trailer mounted, M534 (sheet 2 of 2).

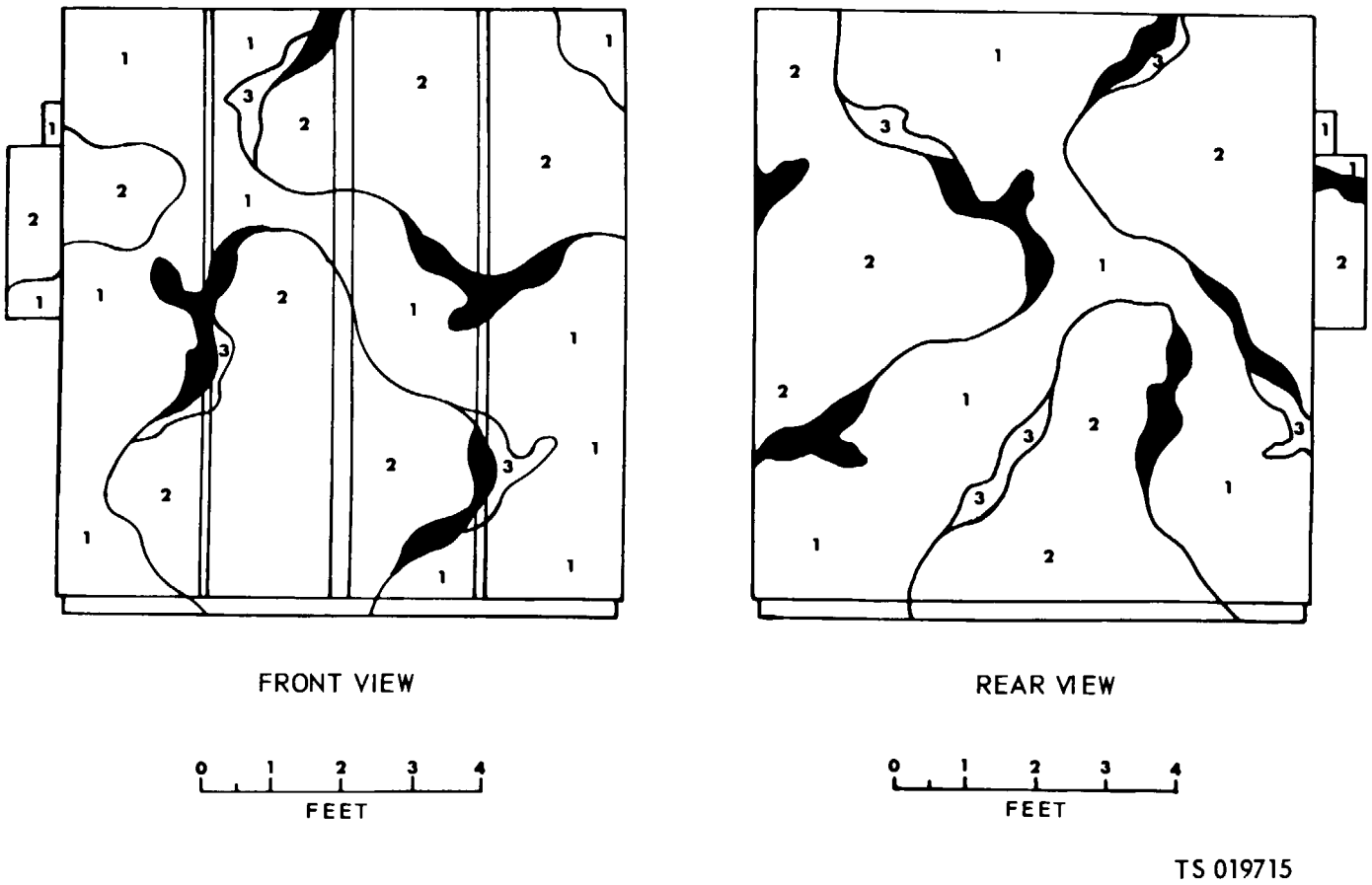

Figure 3-34. Cabinet, dough proofing, insulated portable, 36 pan capacity (sheet 1 of 2).

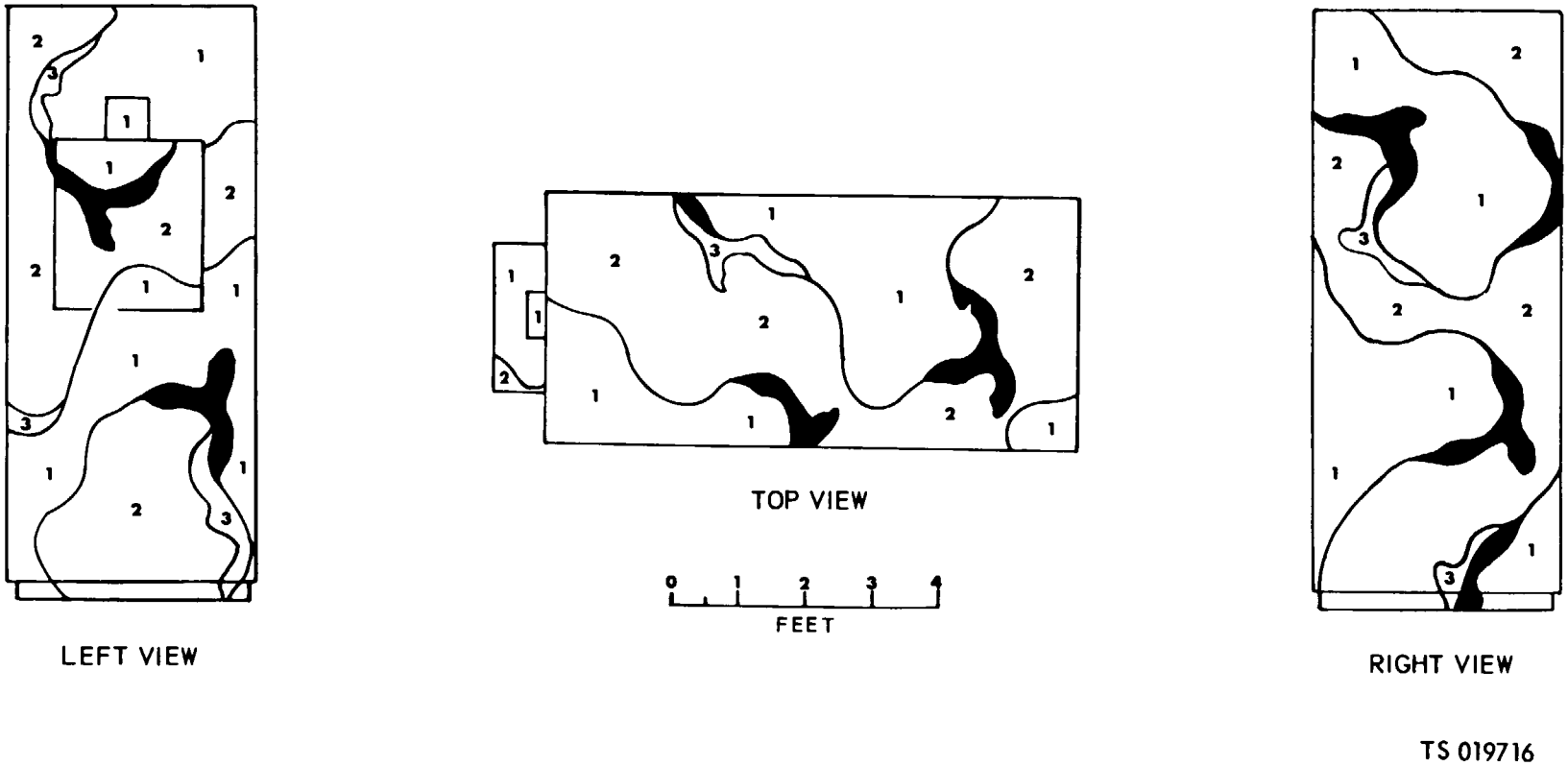

Figure 3-34. Cabinet, dough proofing, insulated portable, 36 pan capacity (sheet 2 of 2).

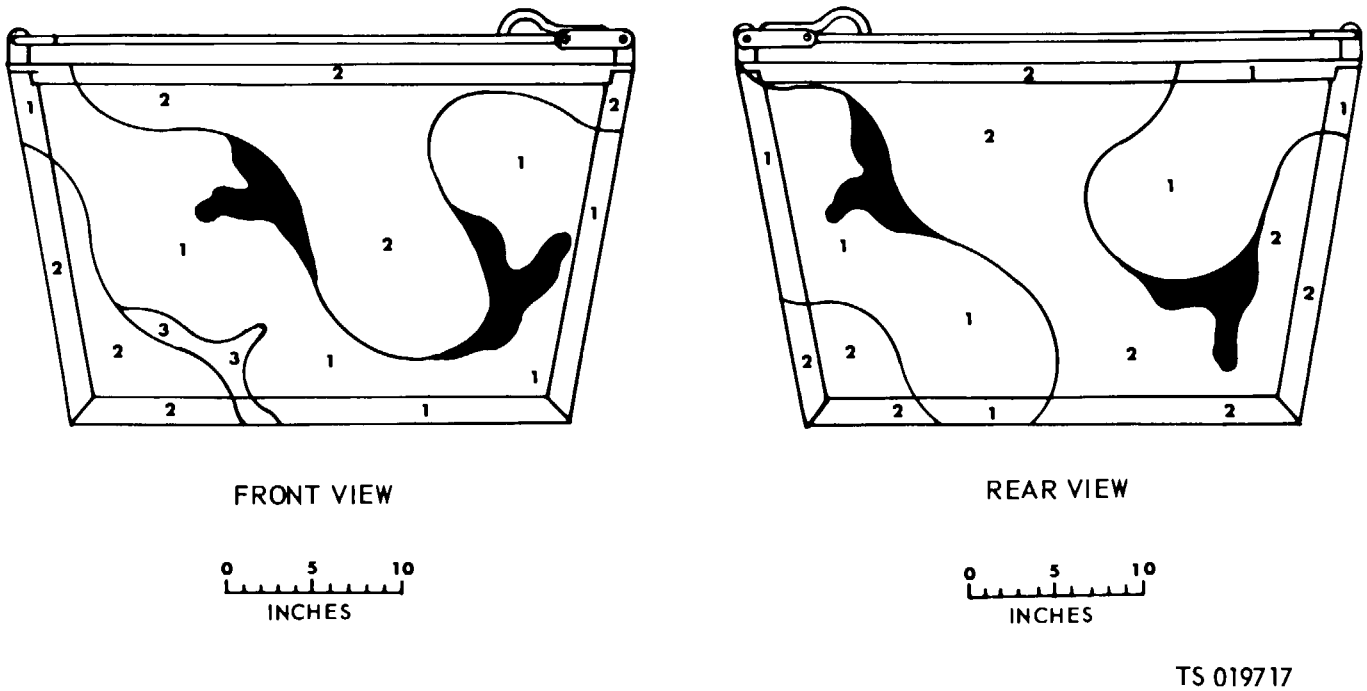

Figure 3-35. Dough trough, bakers (for mobile bakery, M-534) (sheet 1 of 2).

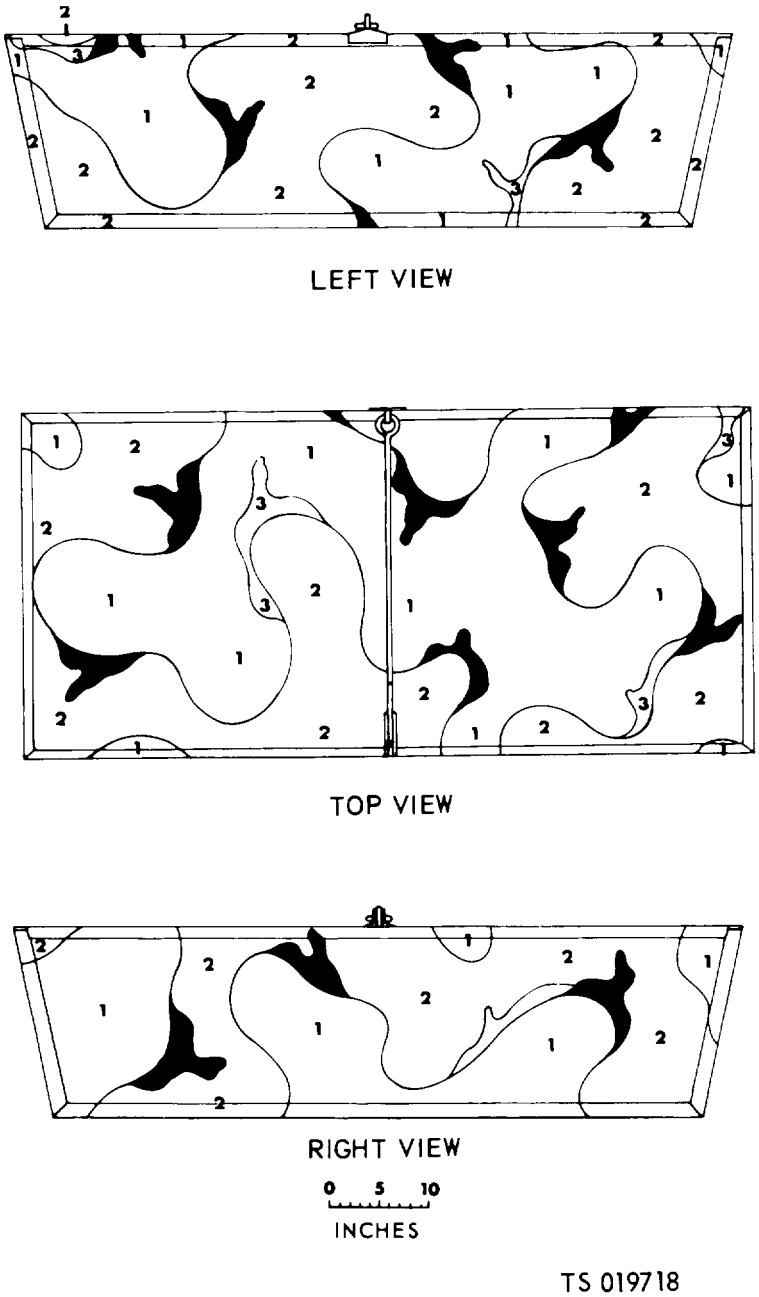

Figure 3-35. Dough trough, baker (for mobile baker,. M-534) (sheet 2 of 2).

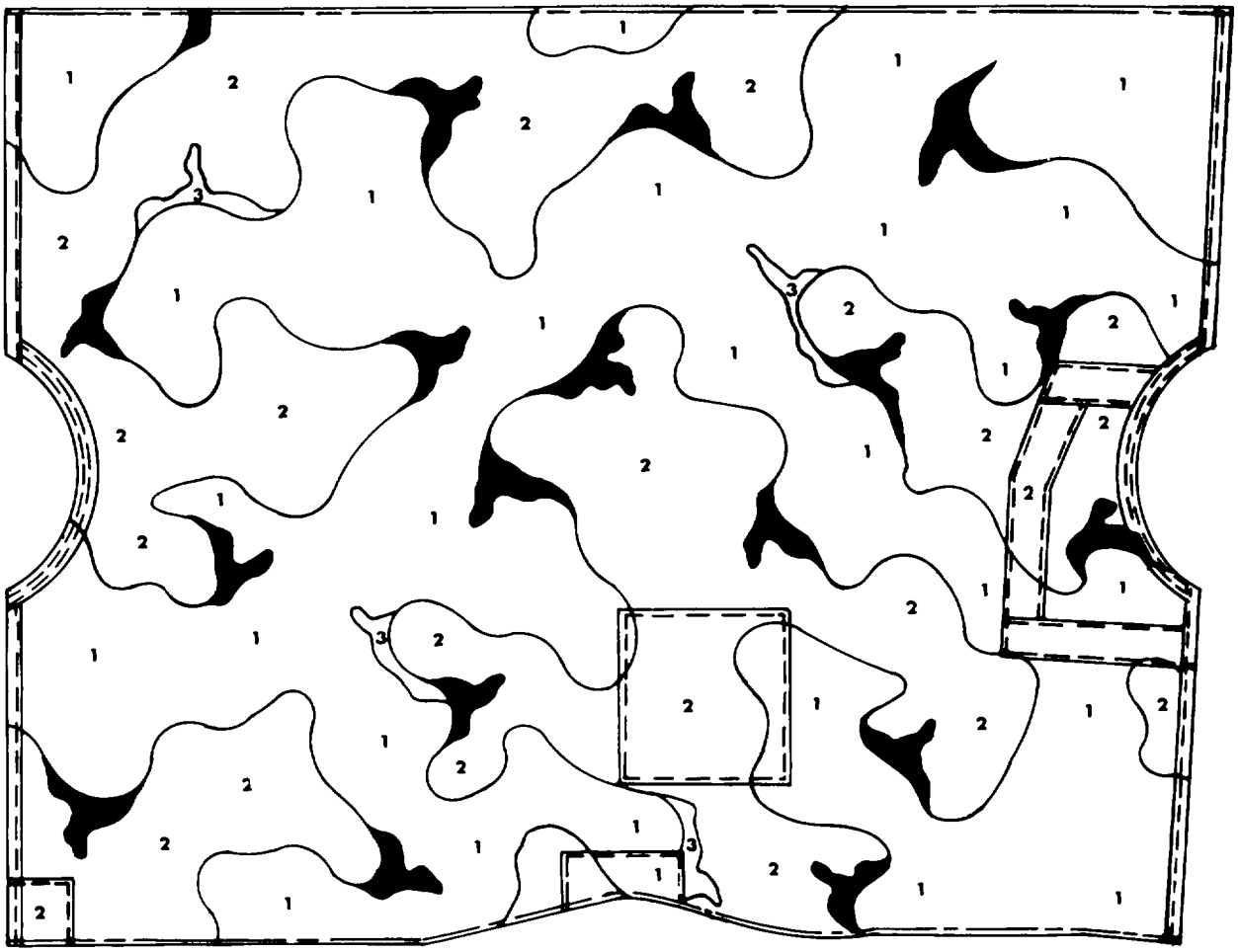

FLAT PATTERN

0 1 2 3
FEET

TS 019719

Figure 3-36. Tarpaulin laundry, trailer mounted, single trailer type. M-.532 (sheet 1 of 2).

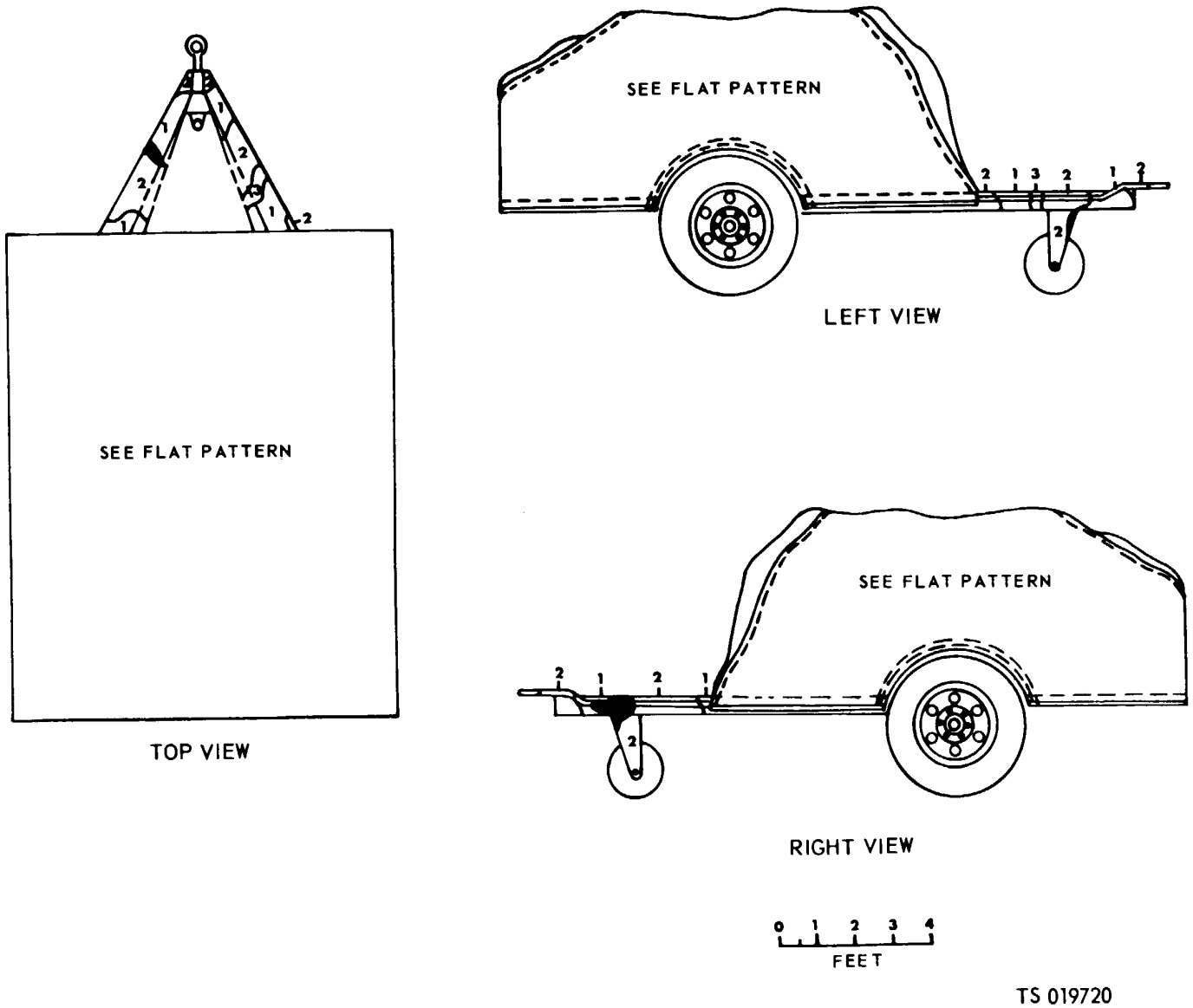

Figure 3-36. Tarpaulin, laundry, trailer mounted, single trailer type. M-532 (sheet 2 of 2).

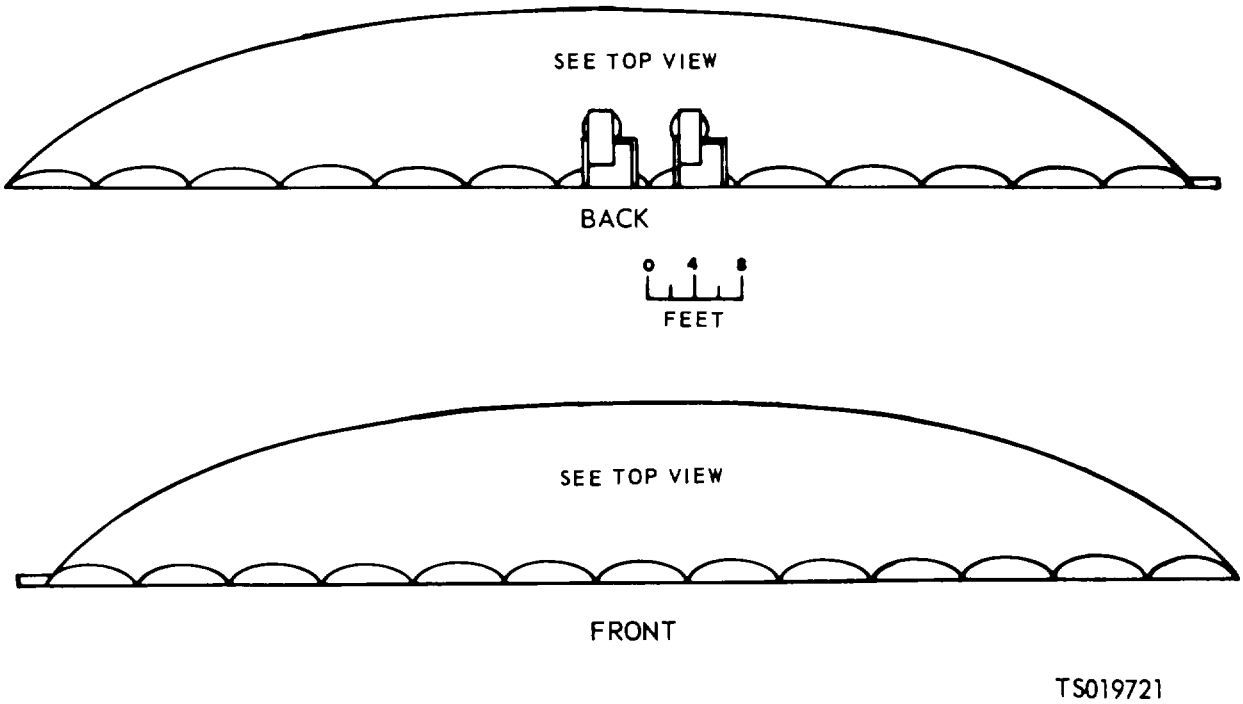

Figure 3-37. Air supported shelter (sheet 1 of 2).

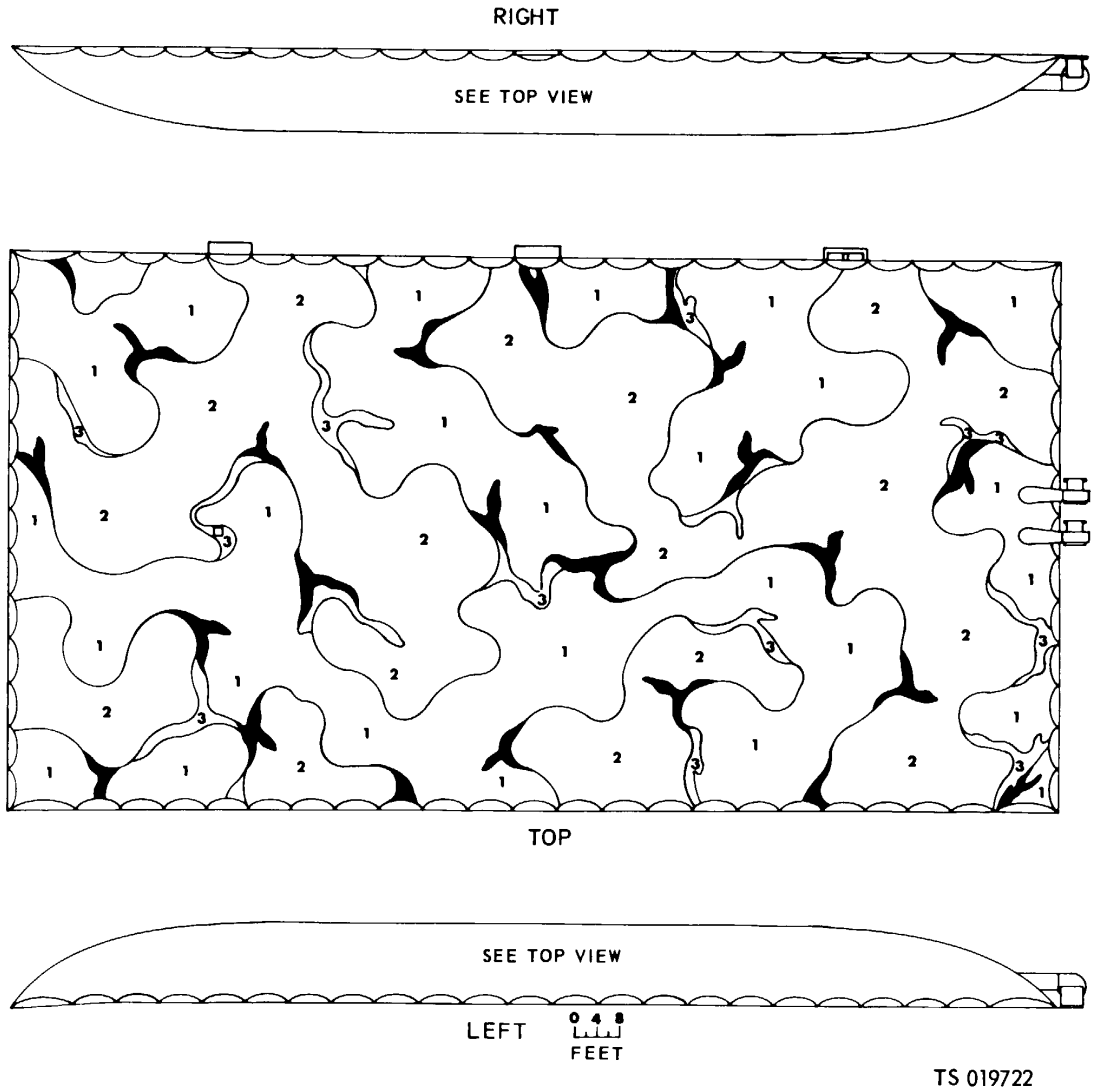

Figure 3-37. Air supported shelter (sheet 2 of 2).

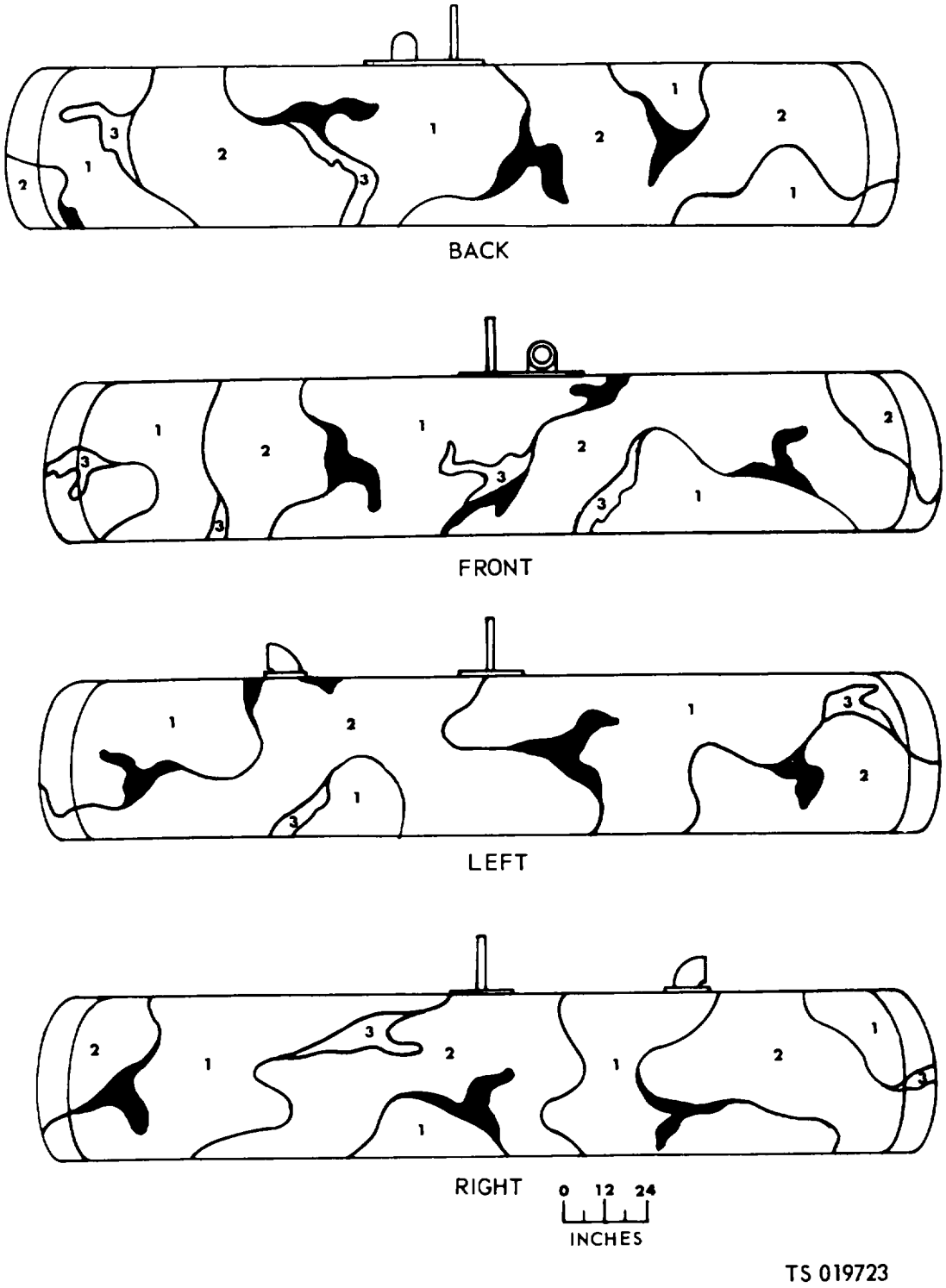

Figure 3-38. Tank, fabric, collapsible, 10,000 gallon petroleum (sheet 1 of 2).

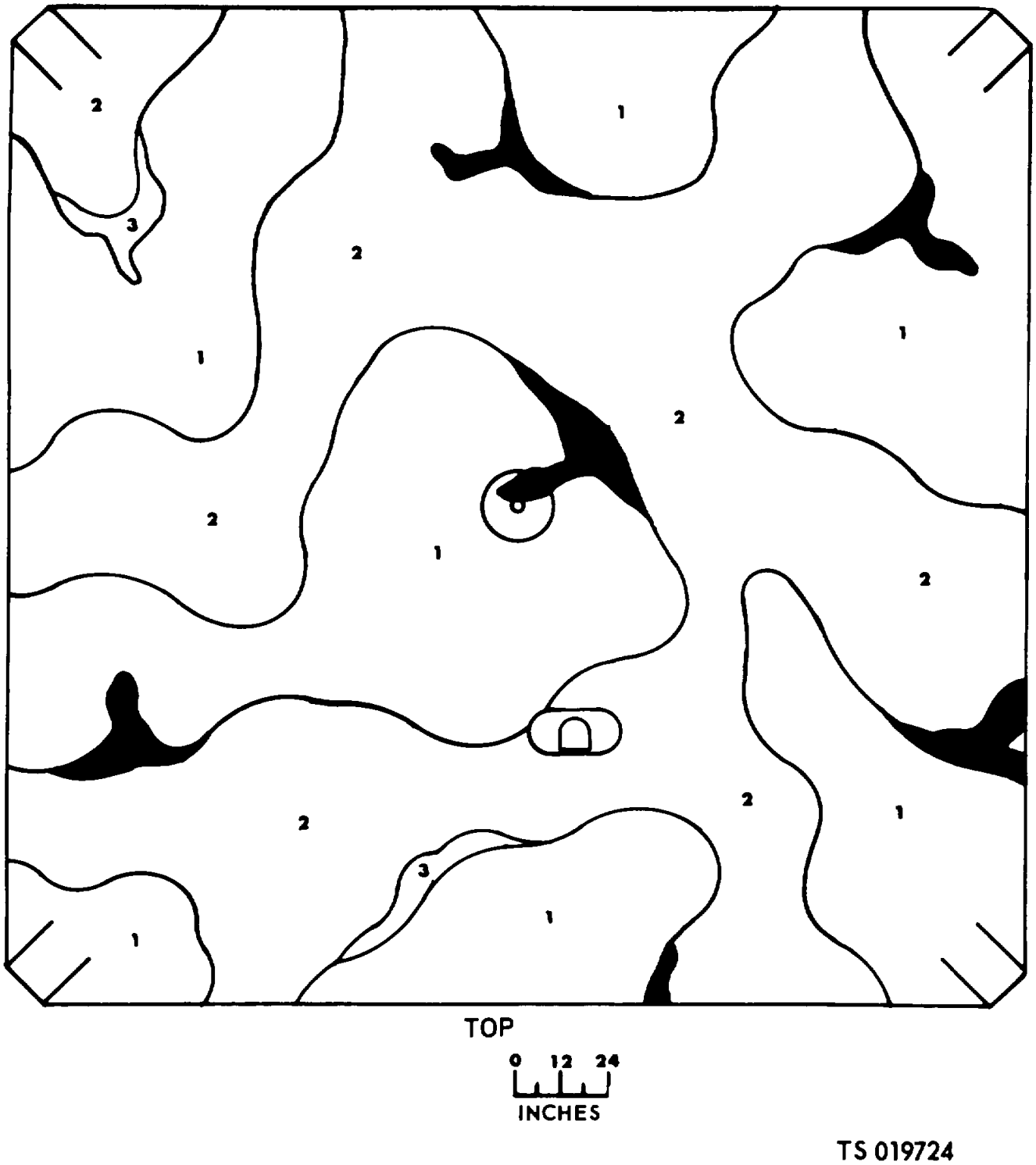

Figure 3-38. Tank, fabric, collapsible, 10,000 gallon petroleum (sheet 2 of 2).

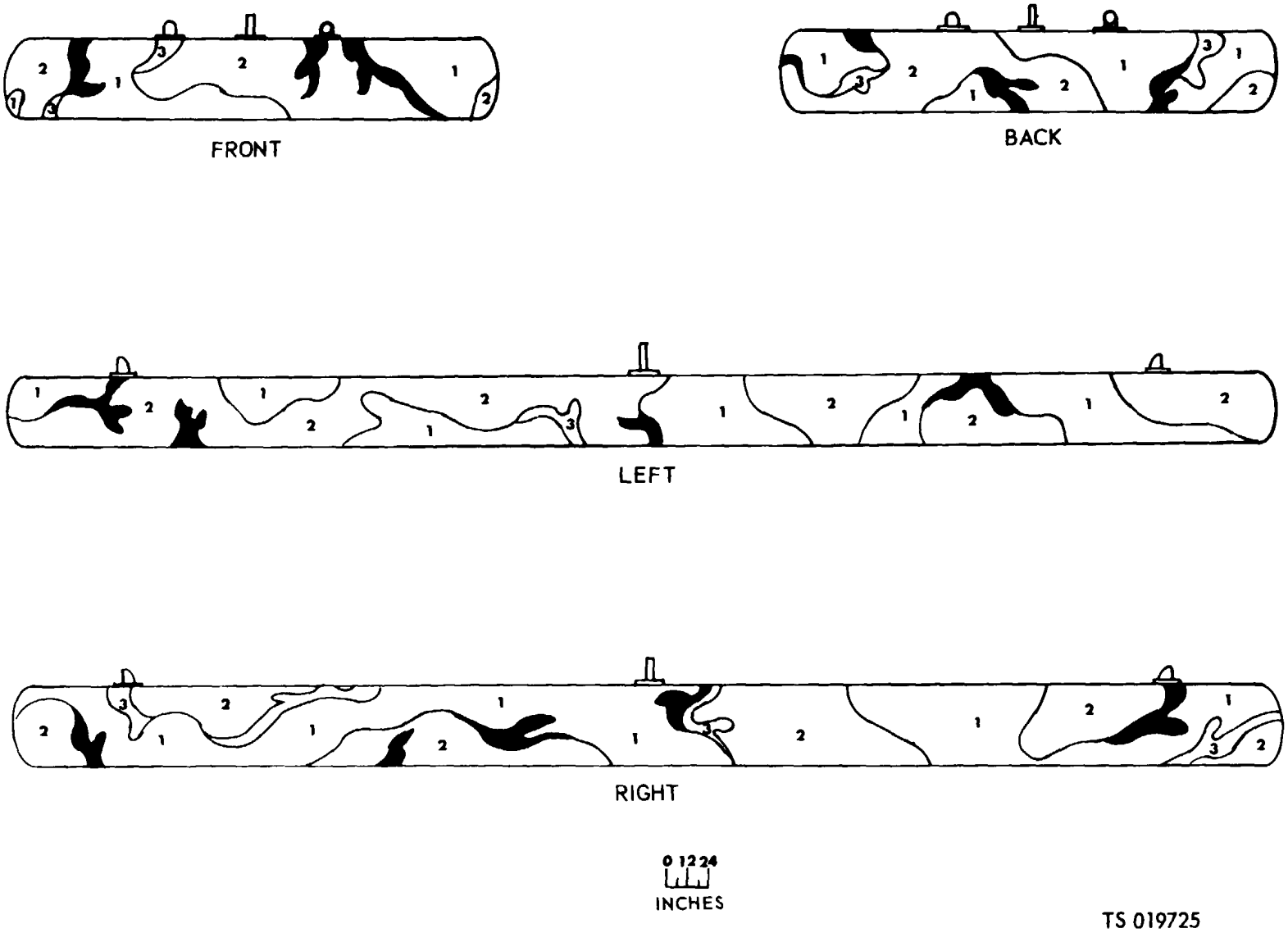

Figure 3-39. Tank, fabric, collapsible, 50,000 gallon petroleum (sheet 1 of 2).

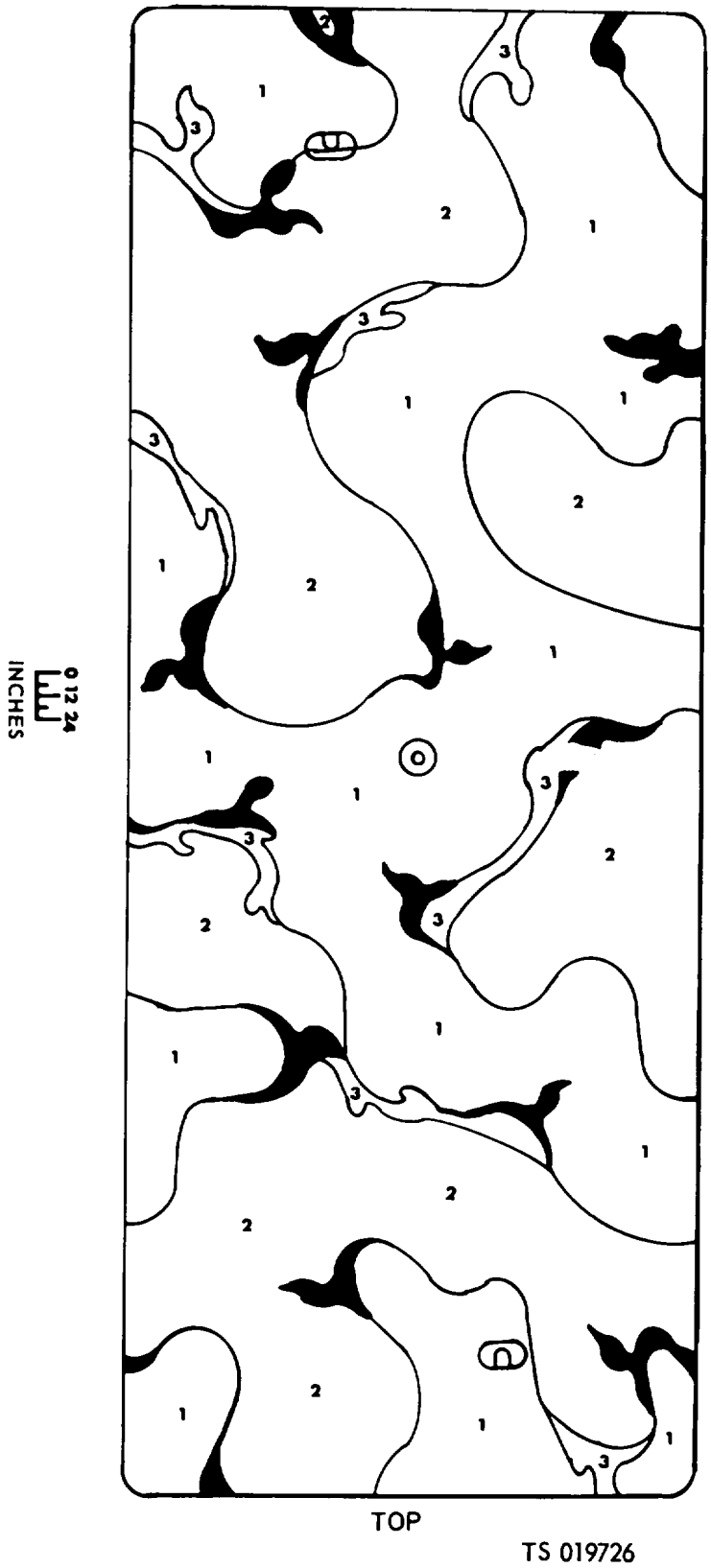

Figure 3-39. Tank, fabric, collapsible, 50,000 gallon petroleum (sheet 2 of 2).

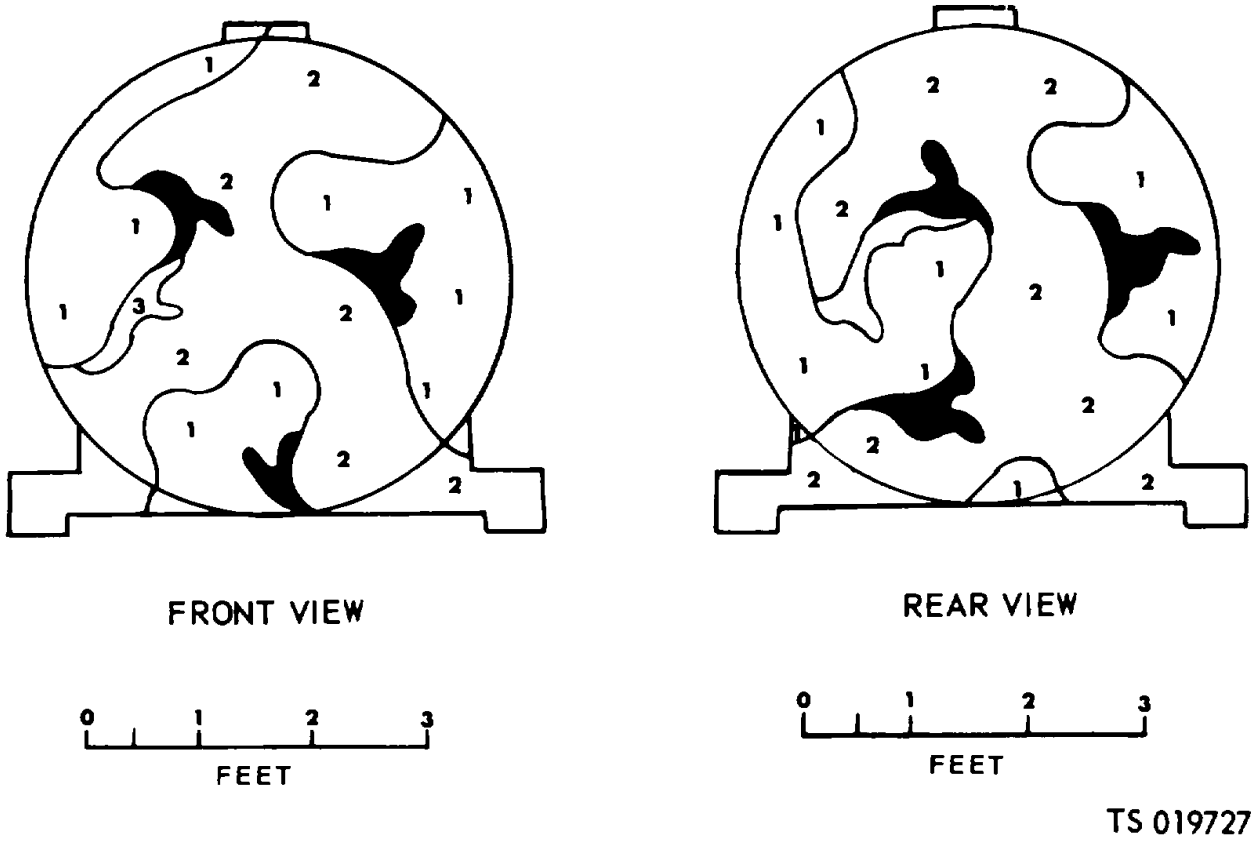

Figure 3-40. Tank storage, liquid gas, skid mtd, MIL-T-3784 (sheet 1 of 2).

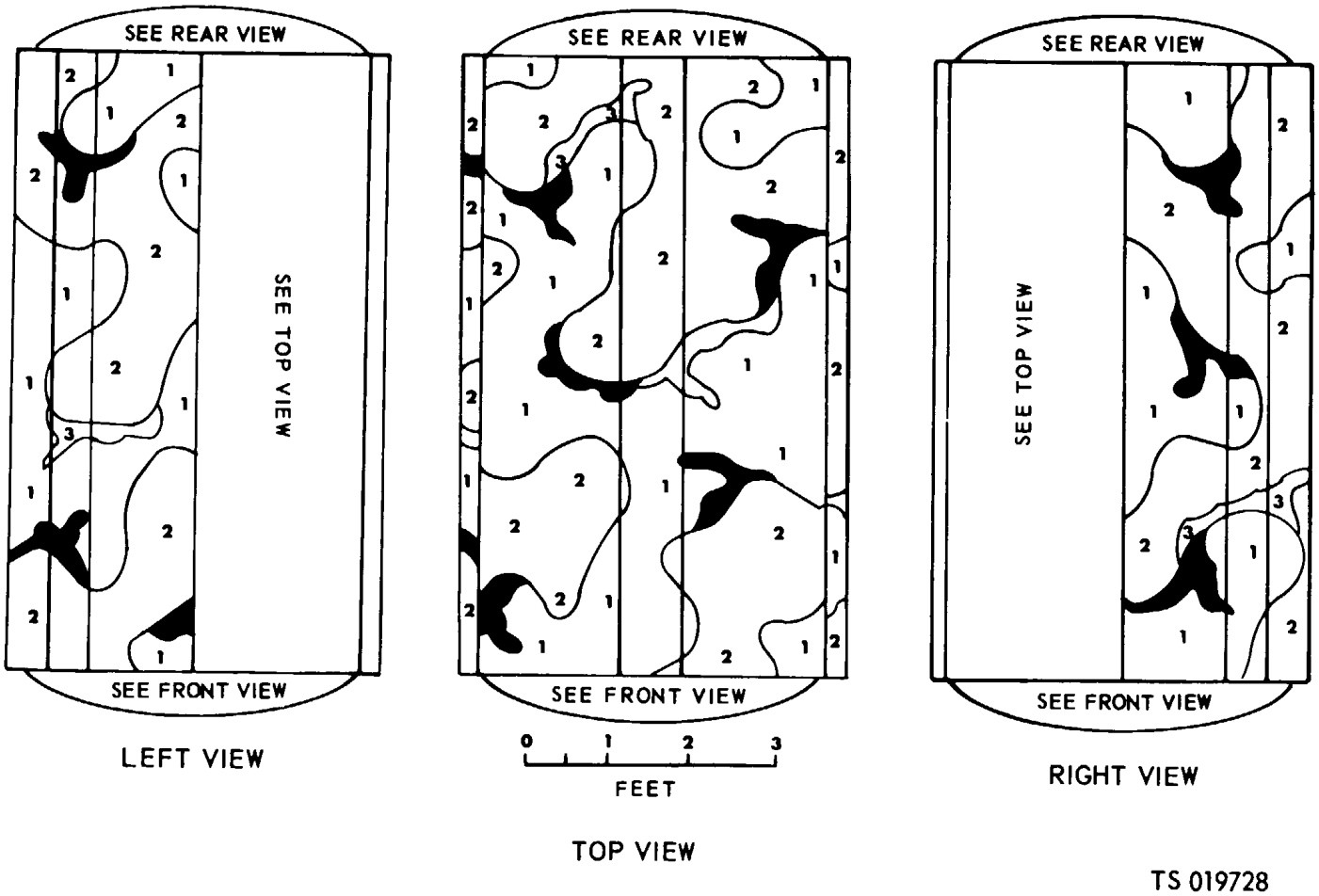

Figure 3-40. Tank storage, liquid gas, skid mtd, MIL-T-3784 (sheet 2 of 2).

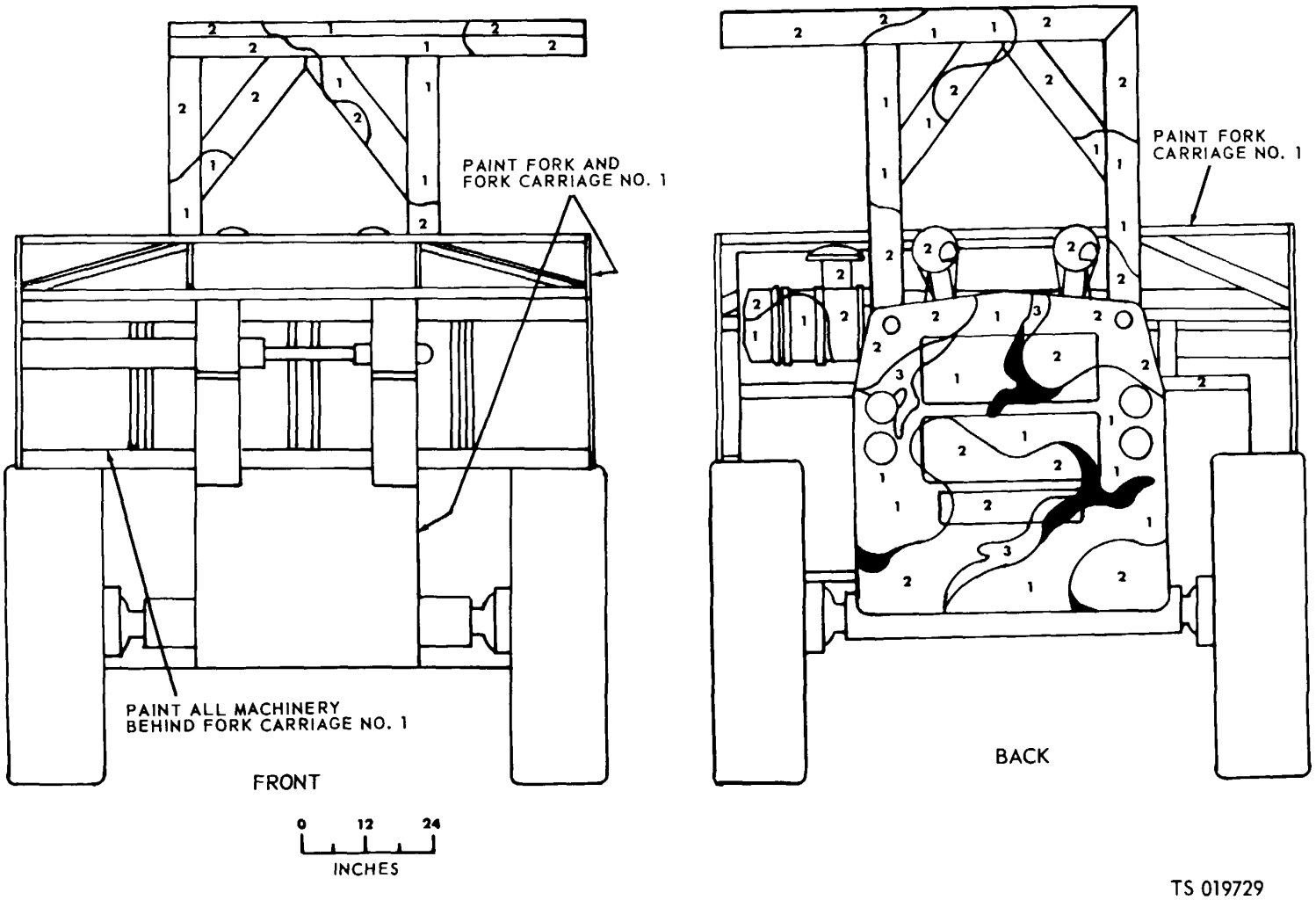

Figure 3-41. Fork lift truck 10,000 lb. Rough terrain (sheet 1 of 4).

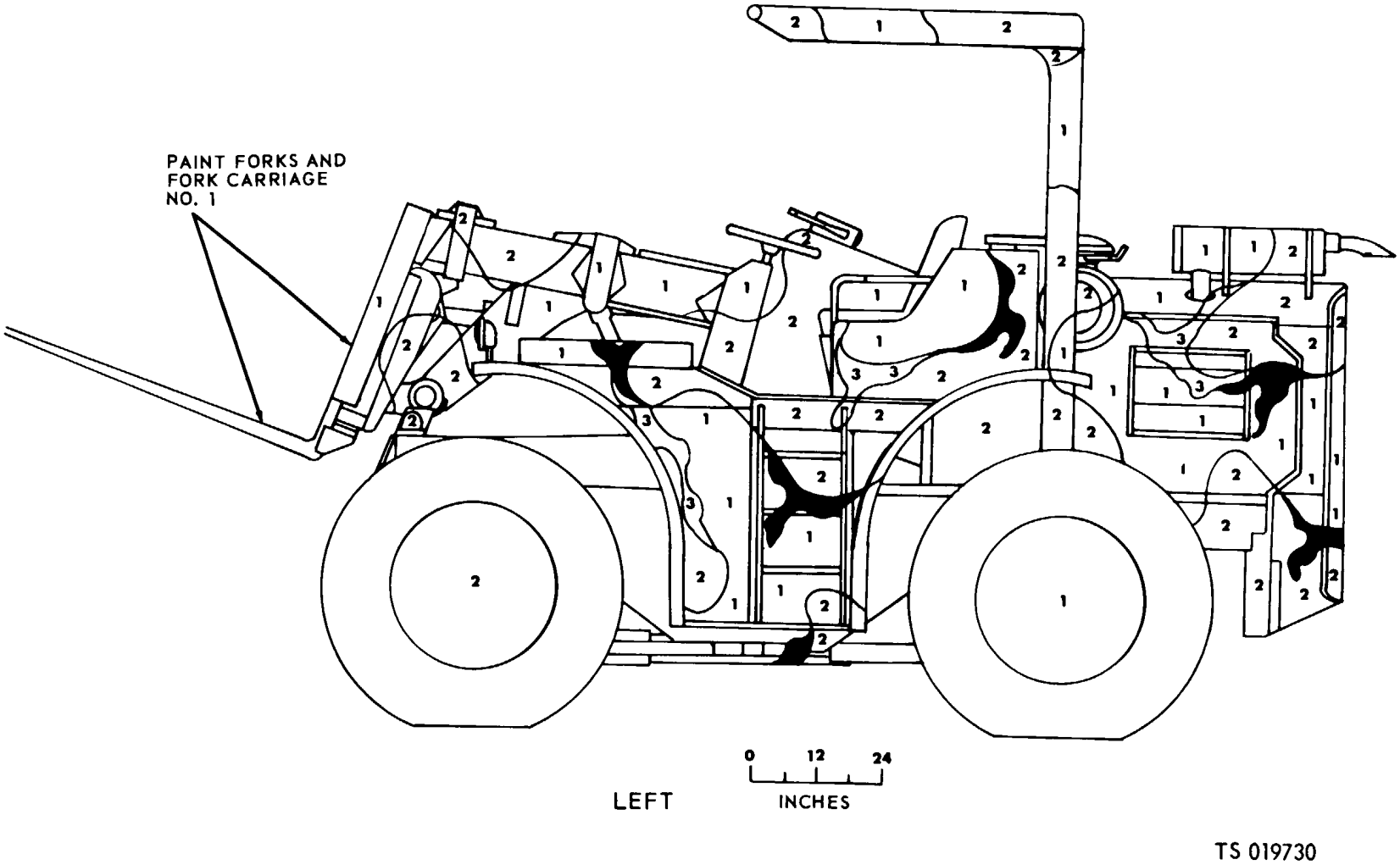

Figure 3-41. Fork lift truck 10,000 lb. rough terrain (sheet 2 of 4).

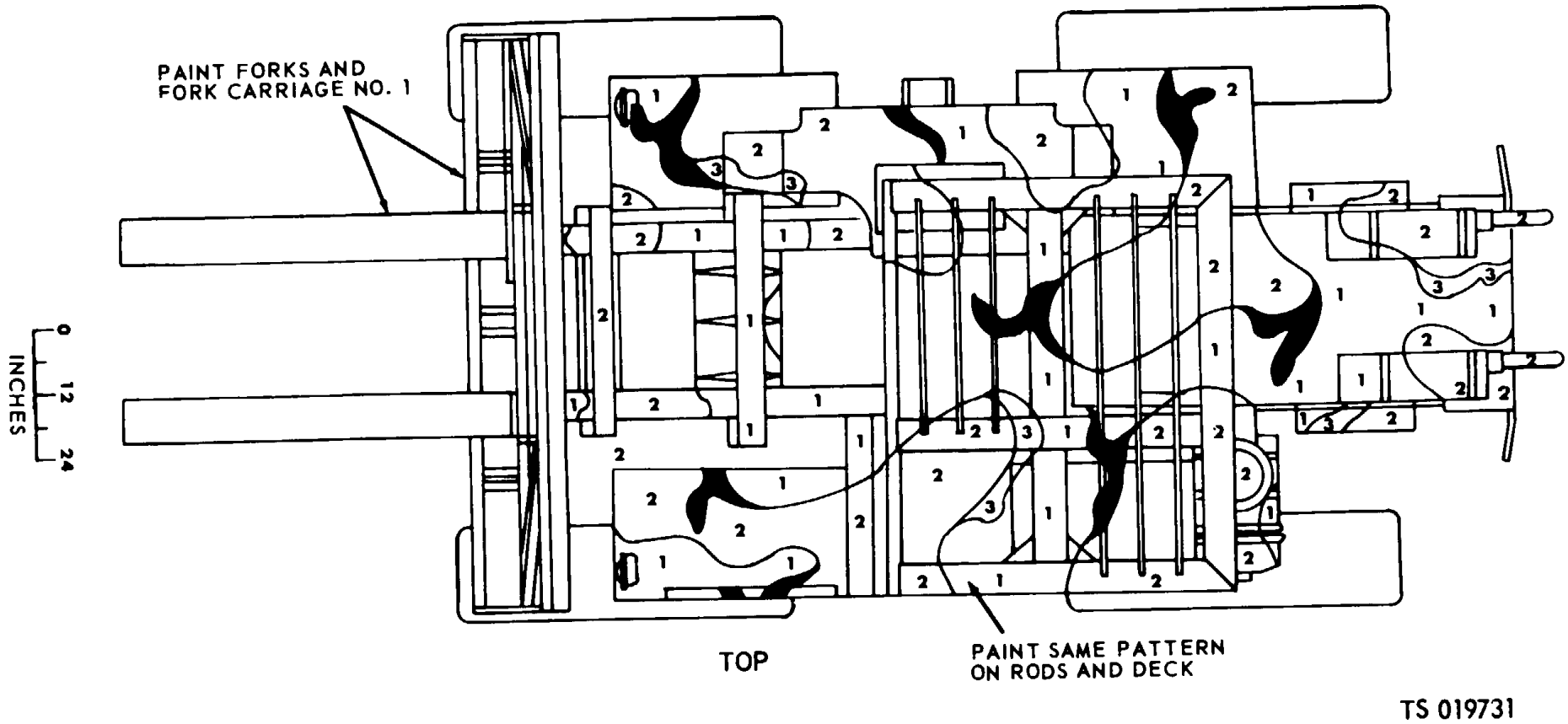

Figure 3-41. Fork lift track 10,000 lb. rough terrain (sheet 3 of 4).

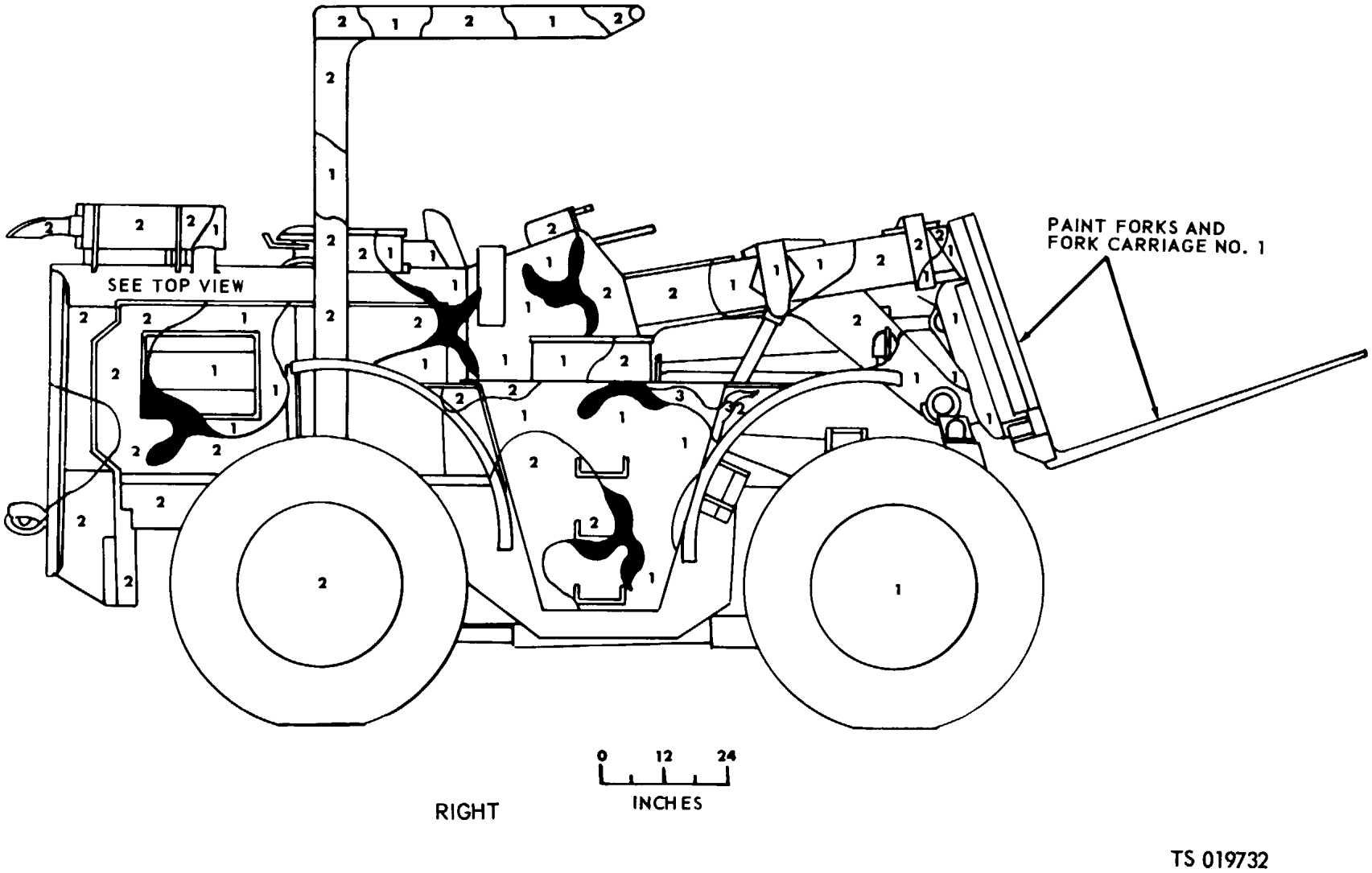

Figure 3-41. Fork lift truck 10,000 lb. rough terrain (sheet 4 of 4).

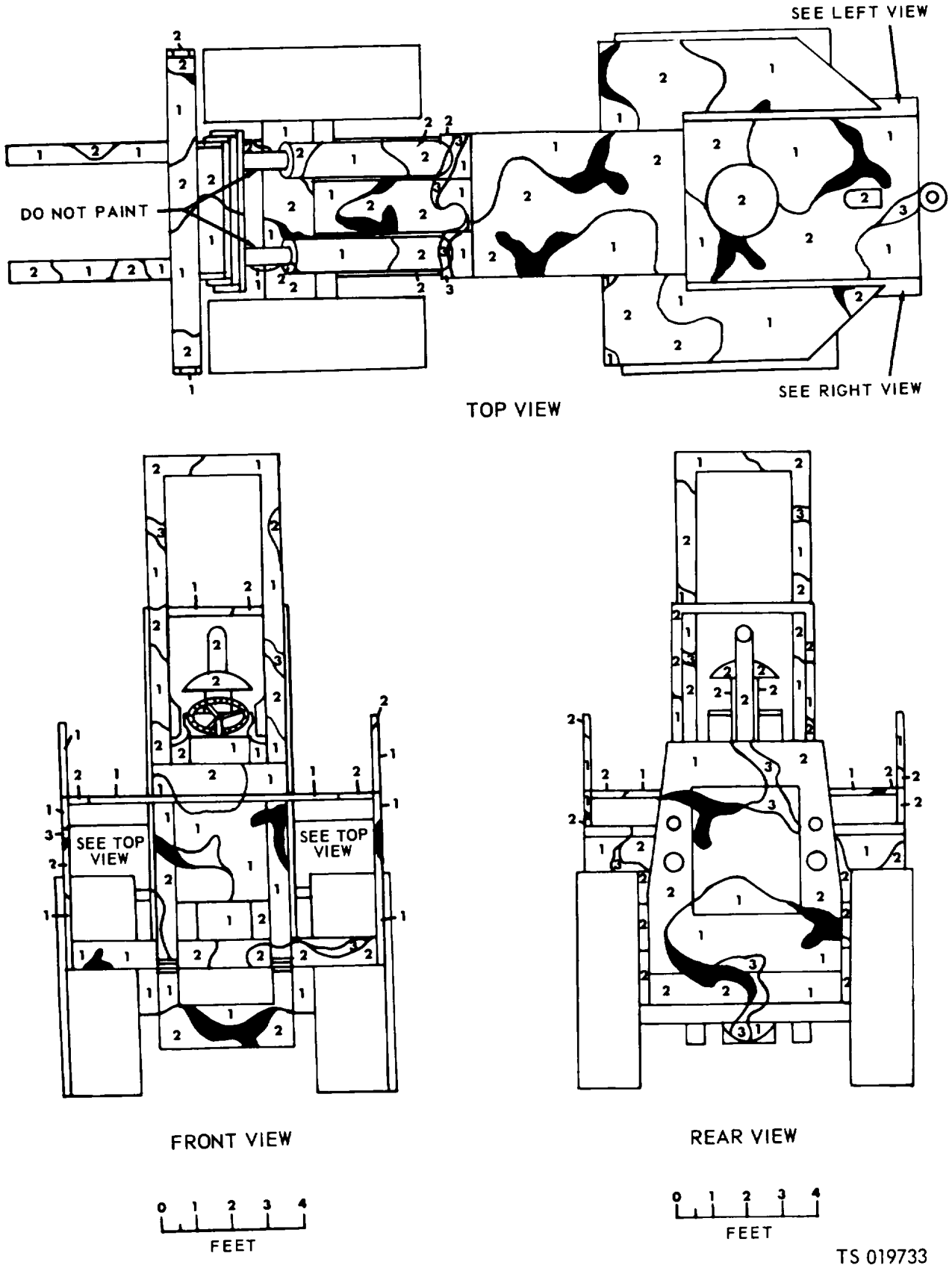

Figure 3-42. Truck, fork lift, COML 15, 000 and 50,000 lb. (sheet 1 of 2).

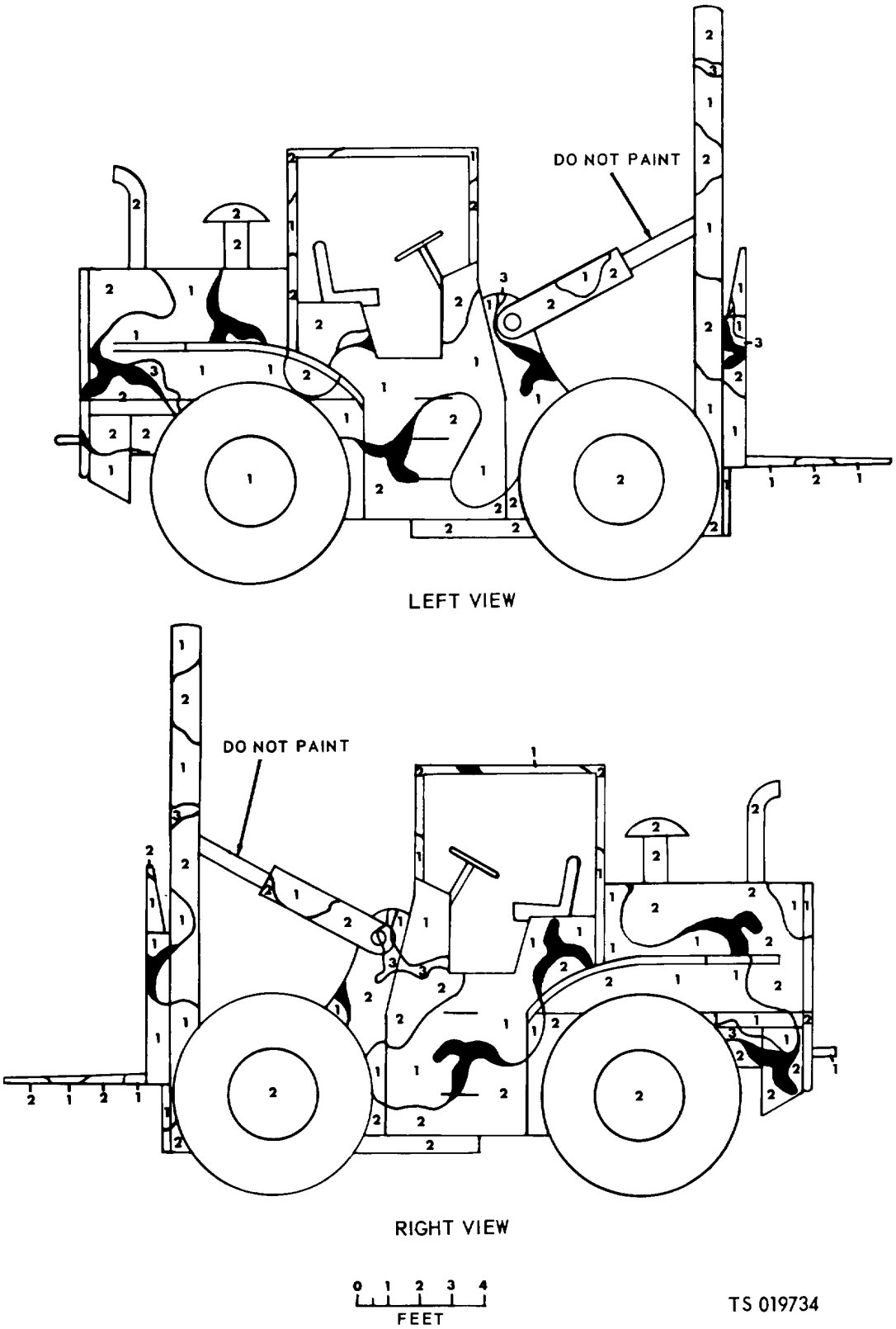

Figure 3-42. Truck, fork lift, COML 15,000 and 50,000 lb. (sheet 2 of 2).

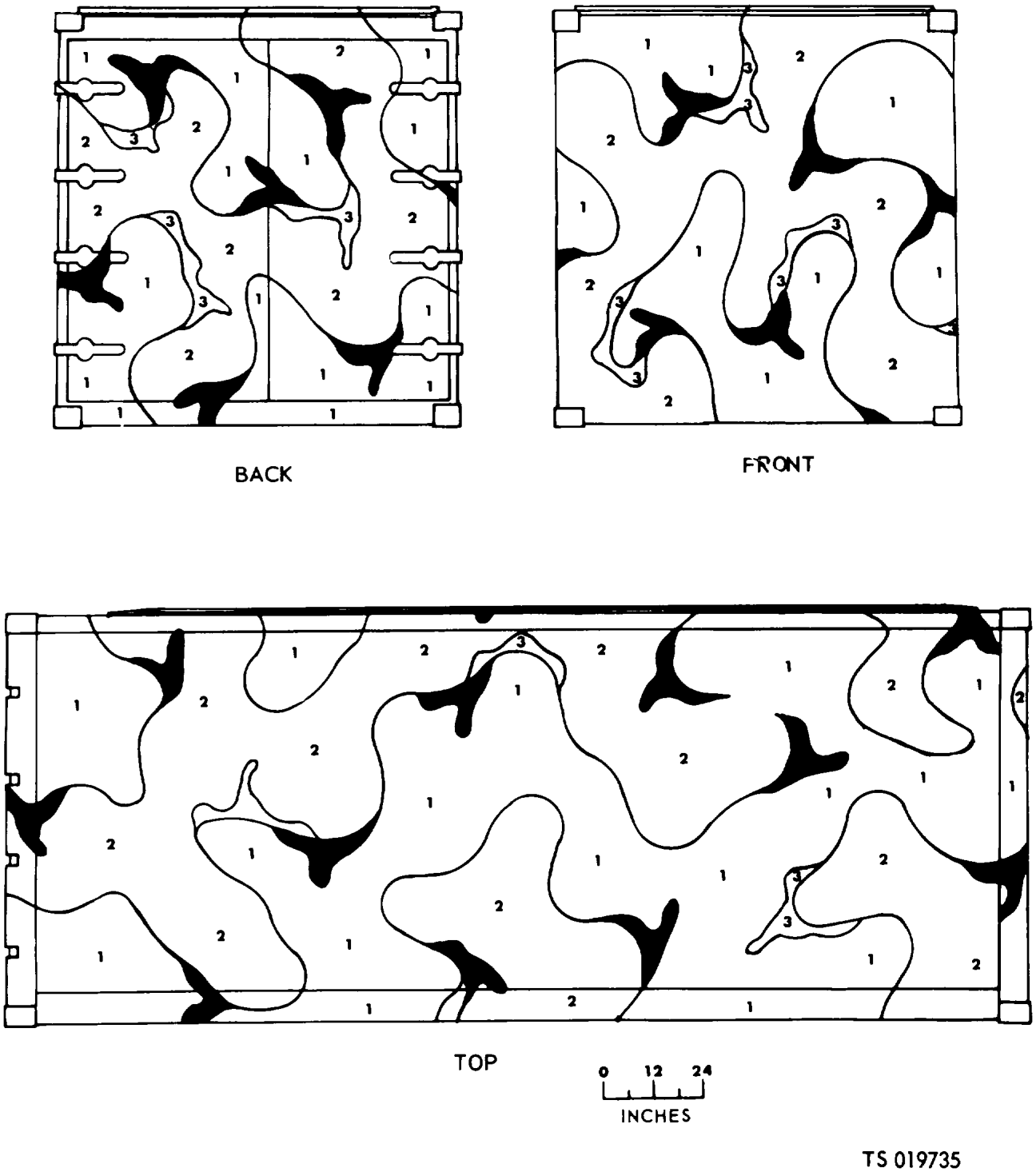

Figure 3-43. Map reproduction unit, trlr mtd (body van, MIL-B-13207) (sheet 1 of 2).

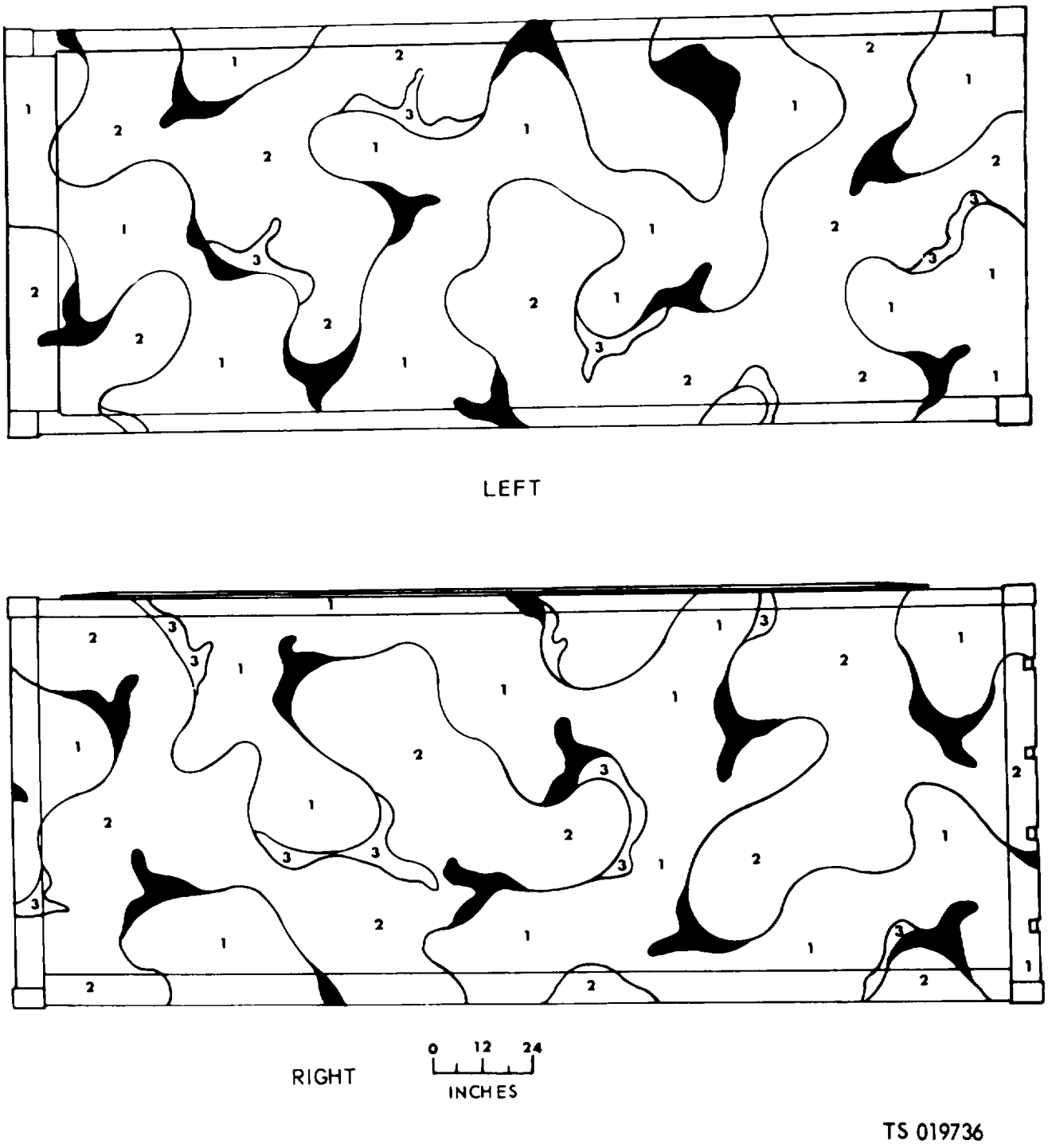

Figure 3-43. Map reproduction unit, trlr, trlr mtd (body van. MIL-B-13207) (sheet 2 of 2).

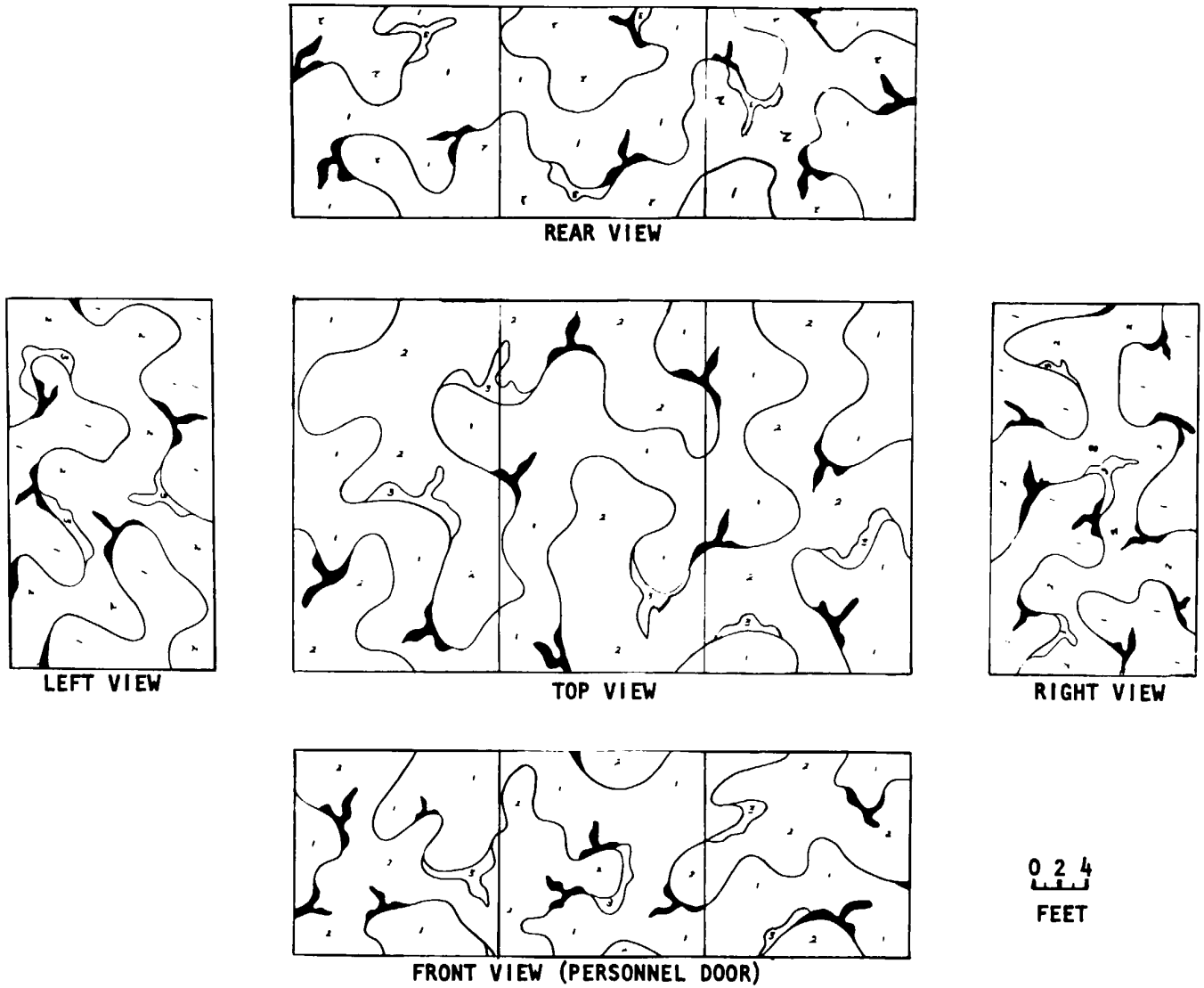

Figure 3-44. Expandable and Portable Shelter for Shop and Aircraft Maintenance (SPAM).

APPENDIX A

REFERENCES

AR 385-63	Regulations for Firing Ammunition for Training, Target Practice and Combat.
AR 55-355	Military Traffic Management Regulations.
AR 58-1	Joint Procedures for Management of Administrative Use Motor Vehicles.
AR 700-84	Issue and Sale of Personal Clothing.
AR 750-58	Painting, Camouflage Painting, and Marking of Army Materiel.
FED-STD-595	Colors.
FM-5-20	Camouflage.
FM-5-36	Route Reconnaissance and Classification.
L-S-300	Sheeting and Tape, Reflective: Nonexposed Lens, Adhesive Backing.
MIL-E-52798	Enamel, Alkyd, Camouflage.
MIL-E-52798	Lusterless Forest Green.
MIL-M-43719	Marking Materials and Markers, Adhesive, Elastromeric, Pigmented.
MIL-P-13340	White Water Paste.
MIL-STD-642	Identification Marking of Combat and Tactical Transport Vehicles.
MIL-STD-709	Ammunition Color Coding.
MIL-T-6095B	Thinner, Cellulose-Nitrate Dope, Blush-Retardant.
MIL-W-05044	Walkway Compound, Nonslip, and Walkway Matting, Nonslip.
TB-746-92-1	Painting and Marking of Guided Missiles and Rockets.
TB-746-92-2	Color and Marking of Basic HAWK and Self-Propelled HAWK Guided Missile System Ground Support Equipment (HAWK Air Defense Guided Missile System).
TC 5-200	Camouflage Materials.
TM 43-0139	Painting Instructions for Field Use.
TM 5-200	Camouflage Materials.
TT-E-776B	Butyl Cellosolve.
TT-P-595A	Preservative Coating, Canvas.
TT-T-291	Mineral Spirits.
TT-X-916	Xylene.

APPENDIX B

WEIGHT CLASSIFICATION DATA

Vehicle Description	Weight (Short tons)			Class		
	E	Loaded		E	Loaded	
		C	H		C	H
Launcher, M4SA2 tank chassis, transporting, w/bridge, armored vehicle launched scissoring type, 60 ft. C1 60	48	64	..	45	66	..
Launcher, M60 tank chassis. Transporting, w/bridge, armored vehicle launcher, scissoring type, 60 ft. C1 60	41.5	56.4	..	38	54	..
Launcher, M60A1 tank chassis, transporting, w/bridge, armored vehicle launched scissoring type, 60 ft, C1 60	43.15	57.95	..	40	57	..
Lighter, amphibious, resupply cargo.						
5 T, 4 x 4 (LARC-V)	10	15	..	10	15	..
15 T, 4- x 4 (LARC-XV)	22.6	37.6	..	27	50	..
Topographic set, trk mtd. 2 1/2 T. 6 x 6:						
Cartographic section	..	11.3	..	..	10	..
Copy and supply section	..	11.8	..	..	10	..
Map revision section	..	10.9.	..	..	9	..
Multiplex section	..	12.1	..	..	11	..
Photomapping section	..	10.9	..	..	9	..
Rectifier section	..	12.1			11	..
Topographic reproduction section set, trk mtd, 2' T, 6 x 6:						
Camera section	..	9.75	..	..	9	..
Laboratory section	..	9.3	..	..	8	..
Map layout section	..	9.1	..	..	9	..
Photographic-printing-processing section	..	10.5	..	..	9	..
Photomechanical process section	..	12.1	..	..	11	..
Plate grainer section	..	10.2	..	..	9	..
Plate process section	..	9.5	..	..	8	..
Press section	..	11.6	..	..	10	
Transporter for mobile floating assault bridge-ferry:						
w superstructure, end bay	25.8	..	..	24	..	..
w superstructure, interior bay	23.5	..	..	21	..	..
Truck, firefighting, 6 x 6, 500 gpm:						
Hesse mdl HC-26, pumper, foam & water, on M44 Chassis	8.7	10.3	..	8	9	..
Class 530B, on M45A2 chassis	10.57	..	..	9	..	
Trailer, flat bed, dough mixing & makeup outfit, 4 T. 4 whl, M795	2.56	6.56	..	3	8	..
Semitrailer, van. refrigerator 7 1/2 T, 2 whl, M349 and M349A1	4.3	..	11.8	5	..	13
Compressor, Air, reciprocating, trlr mtd, 4 whl, 315 cfm, 100 psi:						
Davey Mdl 315 WDS	3.48	..	..	4	..	..
Ingersoll Rand mdl 1K-315	4.08	..	..	4	..	..
LeRoi mdl :315D2-C	4.36	..	..	4	..	..
Compressor, air, reciprocating, truck mtd, 6 x 6. 80 cfm, 5.000 psi:						
Clark mdl HO 6-5C	9.25	..	..	8	..	..
Joy mdl 80-HGC2-MS-1 and 80-HGC3-MS-1	9.21	..	..	8	..	..
Compressor, air, reciprocating, truck mtd. 6 x 6. 210 cfm. 100 psi:						..
Davey mdl 210 WDS	7.9	..	..	8	..	..
Joy mdl 210G1	7.65	..	..	7	..	..
Compressor air, rotary. trlr 3 1 :2 1'. 2 whl. M353. 250 cfm. 100 psi. Joy Mdl RPV 250 DC MS-1	4.83	..	..	7	..	..
Compressor air, rotary, trlr, mtd, 4 whl. 600 cfm. 100 psi. Ingersoll Rand mdl DR-600 and DR-600W	5.6	..	..	6	..	..
Compressor. air. rotary. truck mtd. 6 x 6. 210 cfm. 100 psi:						
Harris mdl J-210-FED	7.53	..	..	7	..	..
LeRoi Mdl RPA-210GD3-MS-1	7.35	..	..	6	..	..
Conversion-storage-charging unit, CO, semitrlr mtd, 16,000 lb capacity, Cardox mdl FE34365	11.7	..	..	10	..	..

Weight Classification Data-Continued

Vehicle Description	Weight (Short tons)			Class		
	Loaded E			E	Loaded	
		C	H		C	H
Conversion unit, CO, semitrlr, mtd, 260 lb/hr:						
Electric Heat mdl SC02	16	..	..	20	..	..
Girdler mdl 32-4150 .	15	..	..	13	..	..
Girdler mdl 131-4910	19.3	..	..	17	..	..
Cooling tower, liquid, semitrlr mtd, 240 gpm, Badger mdl CT-1	8.5	..	..	7	..	..
Generator and charging plant, acetylene, semi-trlr mtd, 750 cu ft/hr, Rexarc mdl TMCP-750	14.18	..	..	12	..	..
Generating and charging plant, CO2, semitrlr mtd, 300 lb/hr:						
Girdler mdl 32-4176	24	..	..	23	..	..
Girdler mdl 32-4027	24.5	..	..	26	..	..
Generator and charging plant, hydrogen-CO2, semitrlr mtd, 156 lb CO_2/hr, Electric Heating Equipment mdl H_28CO_2	24.47	..	..	23	..	..
Generator and charging plant, oxygen-nitrogen, semitrlr mtd, 200 cu ft N_2/hr. Air Products mdl A2	15	..	..	17	..	..
Generator and charging plant, oxygen-nitrogen, semitrlr mtd 5 T Oxygen and 200 lb nitrogen per day, Air Products mdl LON-5, 2 units:						
Air source semitrlr	28.6	..	..	45	..	..
Air separation semitrlr	24.6	..	..	21	..	..
Pump, centrifugal, trlr mtd, 6 in., 1,000 gpm:						
Carver mdl KN6H	2.82	..	..	3	..	..
Jaeger mdl GPHO	3.08	..	..	3	..	..
Water purification equipment set, trlr mtd, 600 gph	2.91	..	..	5	..	..
Water purification equipment set, trk mtd:						
1,500 gph	9.51	..	..	8	..	..
3,000 gph	10.71	..	..	9	..	..
Generator, 45KW, mtd on trlr, 2 whl, 3 1/2 T, XM353	..	3.78	..	..	6	..
Generator. 45KW, mtd on trlr, M200A1	..	4.25	..	..	5	..

INDEX

	Paragraph	Page
Advantages	3-3	3-3
Applicability, general	1-4	1-1
Camouflage pattern painting, general	3-1	3-1
Exceptions	1-5	1-1
Maintenance	3-11	3-8
Marking the pattern on the vehicle	3-6	3-5
National symbol	2-2	2-1
Operational and designation plates:		
Designation plates:		
Data plates	2-6*d*(2)	2-13
Name or identification plates	2-6*d*(1)	2-12
Publication plates	2-6*d*(5)	2-13
Responsible agency plates	2-6*d*(4)	2-13
Servicing data plates	2-6*d*(3)	2-13
General	2-6*a*	2-12
Operation plates:		
Road speed plates	2-6*b*(1)	2-12
Shift diagram plates	2-6*b*(2)	2-12
Precautionary instructions	2-6*c*	2-12
Paint mixing	3-8	3-7
Painting estimates	3-10	3-8
Painting techniques:		
Basic painting instructions	3-9*a*	3-7
Brush painting	3-9*c*	3-7
Spray painting	3-9*b*	3-7
Tips	3-9*d*	3-8
Paints:		
Butyl cellousolve	3-7*c*	3-7
Enamel, alkyd, camouflage	3-7*a*	3-6
Mineral spirits	3-7*e*	3-7
Preservative coating, canvas	3-7*g*	3-7
Thinner, cellulose- titrate dope, blush retardant	3-7*f*	3-7
White water paste	3-7*b*	3-6
Xylene	3-7*d*	3-7
Pattern designs	3-4	3-4
Patterns, general	3-13	3-9
Policy	3-14	3-10
Preparation for pattern painting	3-5	3-5
Purpose	1-1	1-1
Reason for pattern painting	3-2	3-1
Reporting of errors	1-3	1-1
Request for waiver	3-16	3-11
Responsibilities	3-15	3-11
Safety markings	2-3	2-1
Scope	1-2	1-1
Technical markings:		
Arctic lubricated	2-4*c*	2-2
Calibration insignia	2-4*f*	2-3
Capacity and weight	2-4*g*	2-4
Engine hood safety hook	2-4*d*	2-2
Excessive fuel tank pressure	2-4*e*	2-3
Maximum speed	2-4*b*	2-2
Other instructions	2-4*h*	2-5
Tire pressure	2-4*a*	2-2
Training notes	3-1*2*	3-9
Vehicle weight classification data	2-1	2-1
Weight classification	2-5	2-5

By Order of the Secretary of the Army:

FRED C. WEYAND
General, United States Army
Chief of Staff

Official:

PAUL T. SMITH
Major General, United States Army
The Adjutant General

Distribution:

To be distributed in accordance with DA Form 12-34A (qty rqr block No. 180), requirements for TB 43 Series, TROSCOM.

*U.S. GOVERNMENT PRINTING OFFICE: 1997 O - 428-161

TEAR ALONG PERFORATED LINE

RECOMMENDED CHANGES TO EQUIPMENT TECHNICAL PUBLICATIONS

THEN. . JOT DOWN THE DOPE ABOUT IT ON THIS FORM, CAREFULLY TEAR IT OUT, FOLD IT AND DROP IT IN THE MAIL!

SOMETHING WRONG WITH THIS PUBLICATION?

FROM: (PRINT YOUR UNIT'S COMPLETE ADDRESS)

DATE SENT

PUBLICATION NUMBER	PUBLICATION DATE	PUBLICATION TITLE

BE EXACT. . .PIN-POINT WHERE IT IS

PAGE NO.	PARA-GRAPH	FIGURE NO	TABLE NO.

IN THIS SPACE TELL WHAT IS WRONG AND WHAT SHOULD BE DONE ABOUT IT:

PRINTED NAME, GRADE OR TITLE, AND TELEPHONE NUMBER

SIGN HERE:

DA FORM 1 JUL 79 2028-2

PREVIOUS EDITIONS ARE OBSOLETE.

P.S.—IF YOUR OUTFIT WANTS TO KNOW ABOUT YOUR RECOMMENDATION MAKE A CARBON COPY OF THIS AND GIVE IT TO YOUR HEADQUARTERS.

PIN: 020133-000