TM 11-4920-292-15

DEPARTMENT OF THE ARMY TECHNICAL MANUAL

OPERATOR, ORGANIZATIONAL, DS, GS AND DEPOT MAINTENANCE MANUAL

MAGNETIC COMPASS CALIBRATOR SET AN/ASM-339 (V) 1

HEADQUARTERS, DEPARTMENT OF THE ARMY
AUGUST 1968

CHANGE No. 3

HEADQUARTERS
DEPARTMENT OF THE ARMY
WASHINGTON, D. C., *17 June 1971*

Operator, Organizational, DS, GS, and Depot Maintenance Manual Including Repair Parts and Special Tool Lists

MAGNETIC COMPASS Calibrator SET AN/ASM-339(V)1

TM 11-4920-292-15, 2 August 1968, is changed as follows:

1. Remove and insert pages as indicated in the page list below.

Remove pages-	*Insert pages—*
C-1 through C-90	C-1 through C-91

2. File this change sheet in the front of the manual for future reference.

CHANGE No. 2

HEADQUARTERS
DEPARTMENT OF THE ARMY
WASHINGTON, D.C., *2 February 1970*

Operator, Organizational, DS, GS, and Depot Maintenance Manual Including Repair Parts and Special Tool Lists

Magnetic Compass Calibrator Set AN/ASM-339(V)1 and Magnetic Compass Calibrator Set Adapter Kit MK-1040A/ASN

TM 11-4920-292-15, 2 August 1968, is changed as follows:

1. The title is changed as shown above.
2. Remove old pages and insert new pages as indicated below.

Remove pages—	*Insert pages—*
i and ii	i through iv
1-1 and 1-2	1-1 through 1-2.1
	8-1 through 8-4
	9-1 through 9-28
	10-1 through 10-5
	11-1 through 11-14

3. File this change sheet in the front of the manual for future reference.

By Order of the Secretary of the Army:

W. C. WESTMORELAND,
General, United States Army,
Chief of Staff.

Official:

KENNETH G. WICKHAM,
Major General, United States Army,
The Adjutant General.

Distribution:

To be distributed in accordance with DA Form 12-36 (qty rqr block No. 381), direct and general support maintenance requirements for all fixed and all rotor wing aircraft.

CHANGE No. 1

HEADQUARTERS
DEPARTMENT OF THE ARMY
WASHINGTON, D.C., *7 March 1969*

Operator's, Organizational, Direct Support, General Support, and Depot Maintenance Manual Including Repair Parts and Special Tools Lists

MAGNETIC COMPASS CALIBRATOR SET AN/ASM-339(V)1

TM 11-4920-292-15, 2 August 1968, is changed as follows:

1. The title of this manual is changed as shown above.
2. Insert pages as indicated in the page list below.

Remove	*Insert*
	C-1 through C-

3. File this change sheet in front of the publication for reference purposes.

By Order of the Secretary of the Army:

W. C. WESTMORELAND,
General, United States Army,
Chief of Staff.

OFFICIAL:
KENNETH G. WICKHAM,
Major General, United States Army,
The Adjutant General.

Distribution:
To be distributed in accordance with DA Form 12-36, direct and general support maintenance requirements of two (2) copies to each account.

☆ U.S. GOVERNMENT PRINTING OFFICE: 1969—344-433/896

		Paragraph	Page
SECTION I.	INTRODUCTION AND DESCRIPTION		
	Scope	1-A.1	1-1
	Indexes of Publications	1-A.2	1-1
	Forms and records	1-A.3	1-1
	Reporting of equipment manual improvements	1-2	1-1
	Description	1-6	1-1
	Principles of operation	1-17	1-6
II.	SPECIAL SERVICE TOOLS		2-1
III.	PREPARATION FOR USE, STORAGE, OR SHIPMENT		
	General	3-1	3-1
	Preparation for use	3-3	3-1
	Preparation for storage	3-9	3-2
	Preparation for shipment	3-11	3-3
	Packaging	3-13	3-3
IV.	OPERATION INSTRUCTIONS		
	General	4-1	4-1
	Area magnetic survey	4-7	4-1
	Compass swinging procedures	4-36	4-15
V.	PERIODIC INSPECTION, MAINTENANCE, AND LUBRICATION		
	Periodic inspection	5-1	5-1
	Periodic maintenance	5-3	5-1
	Periodic lubrication	5-12	5-1
VI.	TROUBLESHOOTING		
	Troubleshooting	6-1	6-1
	Repair and replacement	6-6	6-1
VII.	CALIBRATION		
	General	7-1	7-1
	Operational tests	7-9	7-10A
VIII.	MAGNETIC COMPASS CALIBRATOR SET ADAPTER KIT MK-1040A/ASN		
	Purpose and use	8-1	8-1
	Technical characteristics	8-2	8-1
	List of components	8-3	8-1
	Description of equipment	8–4	8-3
	Description of major units	8–5	8-3
	Description of minor assemblies	8–6	8-4
IX.	OPERATING INSTRUCTIONS FOR ELECTRICAL COMPASS SYSTEM CALIBRATION		
	General	9–1	9-1
	Equipment required	9–2	9-1
	Equipment setup	9–3	9-1
	Mounting compass transmitter on turntable assembly	9–4	9-2
	Calibrating compass transmitter	9–5	9-5
	Optical transfer procedure	9–6	9-11
	Compass swing procedure	9–7	9-14
X.	MK-1040A/ASN MAINTENANCE		
	Scope of maintenance	10-1	10-1
	Preventive maintenance	10-2	10-1
	Cleaning	10-3	10-1
	Touchup painting	10-4	10-1
	Troubleshooting	10-5	10-1

		Paragraph	Page
SECTION XI.	DEPOT OVERHAUL STANDARDS		
	Applicability of depot overhaul standards	11-1	11-1
	Applicable references	11-2	11-1
	Assigned nomenclature for the AN/ASM-339(V)1	11-3	11-1
	Test facilities required for depot testing of the AN/ASM-339(V)1	11-4	11-1
	Field tester dc continuity check	11-5	11-2
	Magnetic azimuth reference detector valve continuity test	11-6	11-2
	Power test	11-7	11-2
	E 1 voltage engage test	11-8	11-4
	E2 voltage range test	11-9	11-4
	E1 and E2 load regulation test	11-10	11-4
	E 1 and E 2 line regulation test	11-11	11-4
	Readout command accuracy test	11-12	11-4
	800-cycle index error test	11-13	11-4
	400-cycle accuracy and repeatability test	11-14	11-5
	Monitor assembly telescope alignment test	11-15	11-5
	Monitor assembly magnetic alignment test	11-16	11-6
	E1 and E2 check test	11-17	11-7
	Misalignment, ~180, and A270 range test	11-18	11-9
	Manual and electrical monitor assembly swing test	11-19	11-11
	Test facilities required for depot testing of the MK-1040A/ASN	11-20	11-11
	Electrical Special Purpose Cable Assembly CX–10934/ASN test	11-21	11-12
	Branched Electrical Special Purpose Cable Assembly CX-20935/ASN test	11-22	11-12
	Electrical Special Purpose Cable Assembly CX-10936/ASN test	11-23	11-12
	Branched Electrical Special Purpose Cable Assembly CX-10937/ASN test	11-24	11-12
	Electrical Special Purpose Cable Assembly CX-10938/ASN test	11-25	11-13
	Electrical Special Purpose Cable Assembly CX-10939/ASN test	11-26	11-13
	Branched Electrical Special Purpose Cable Assembly CX-10940/ASN test	11-27	11-13
	Branched Electrical Special Purpose Cable Assembly CX-10941/ASN test	11-28	11-13
APPENDIX A.	BASIC ISSUE ITEMS		A-1
B.	MAINTENANCE ALLOCATION		B-1
C.	ORGANIZATIONAL, DS, GS, AND DEPOT MAINTENANCE REPAIR PARTS AND SPECIAL TOOL LISTS		C-1

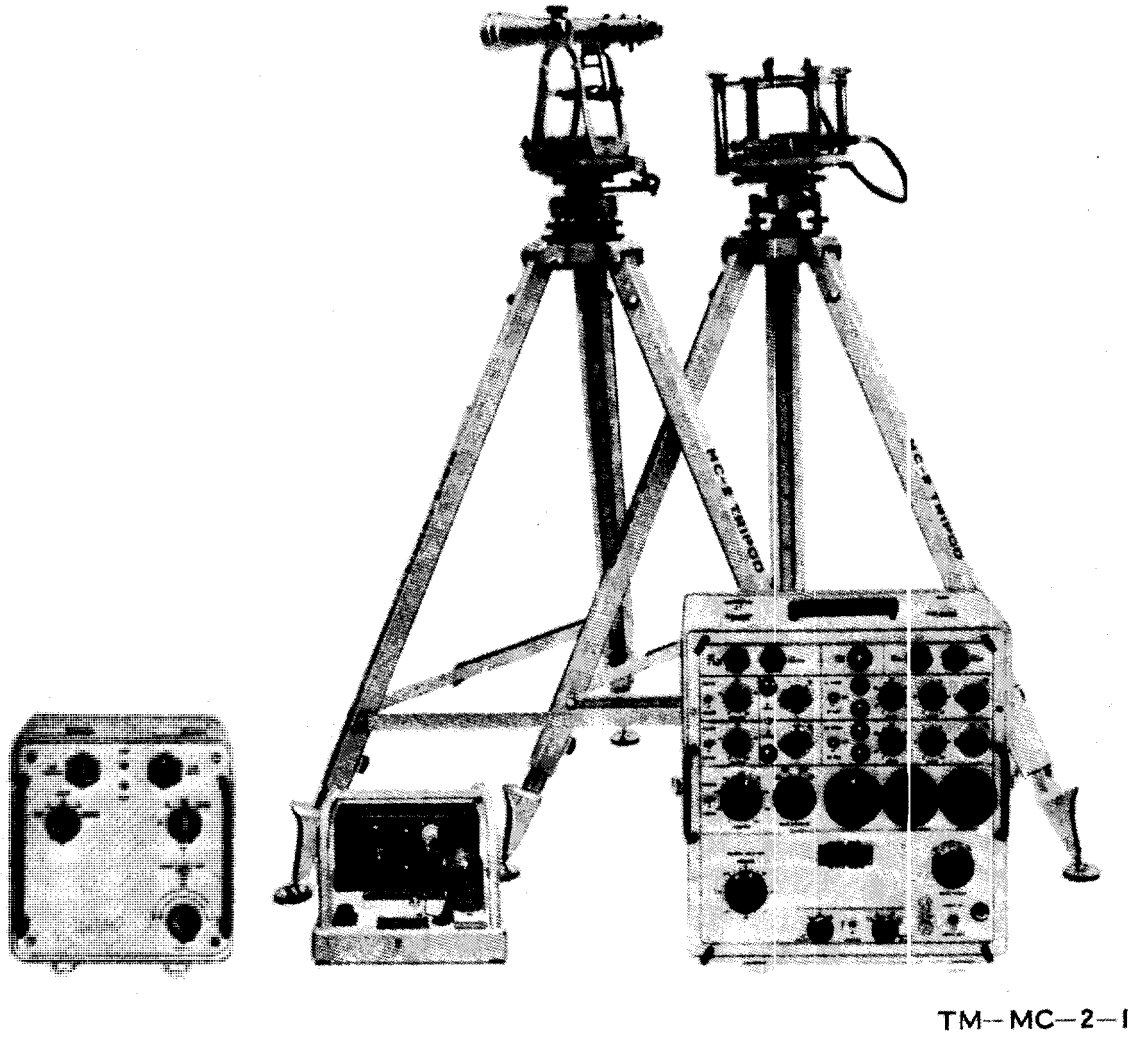

Figure 1-1. Compass calibrator set.

SECTION I
INTRODUCTION AND DESCRIPTION

1-A.1 Scope

a. This manual describes Magnetic Compass Calibrator Set AN/ASM–339 (V) 1 and Magnetic Compass Calibrator Set Adapter Kit MK–1040A/ASN and covers their operation and maintenance.

b. The basic issue items list appears in appendix A, the maintenance allocation chart appears in appendix B, and the repair parts and special tool lists appear in appendix C.

1-A.2 Indexes of Publications

a. DA Pam 310-4. Refer to the latest issue of DA Pam 310-4 to determine whether there are new editions, changes, or additional publications pertaining to the equipment.

b. DA Pam 310-7. Refer to DA Pam 310–7 to determine whether there are modification work orders (MWO's) pertaining to the equipment.

1-A.3 Forms and Records

a. Reports of Maintenance and Unsatisfactory Equipment. Use equipment forms and records in accordance with instructions given in TM 38-750.

b. Report of Packaging and Handling Deficiencies. Fill out and forward DD Form 6 (Report of Packaging and Handling Deficiencies) as prescribed in AR 700–58 (Army), NAVSUP Publication 378 (Navy), AFR 71–4 (Air Force), and MCO P4610-5 (Marine Corps).

c. Discrepancy in Shipment Report (DISREP) (SF 361). Fill out and forward Discrepancy in Shipment Report (DISREP) (SF 361) as prescribed in AR 55-38 (Army), NAVSUP Publication 459 (Navy), AFM 75-34 (Air Force), and MCO P4610.19 (Marine Corps).

1-2. Reporting of Equipment Manual Improvements

Reporting of errors, omissions, and recommendations for improving this publication by the individual user is encouraged, Reports should be submitted on DA Form 2028 (Recommended Changes to Publications) and forwarded direct to Commanding Officer, U.S. Army Electronics Command, ATTN: AMSEL-ME-NMP-AD, Fort Monmouth, N.J. 07703.

1–3. Purpose

Compass calibrator provides a controlled simulated magnetic field about the aircraft transmitter to calibrate accurately the magnetic compass system of the aircraft.

1-4. Capabilities

Compass calibrator has capability of determining compass systems errors without rotation of aircraft to various headings as on a compass rose. Compass calibrator also has capability of surveying an area for magnetic uniformity and providing necessary data for layout and making of a compass swing site. Compass calibrator will provide electrical heading inputs from 0 to 345 degrees in 15-degree increments with an accuracy of 0.1 degree.

1-5. Limitations

Compass swing requires that an aircraft be towed into position along the north-south line and requires that the compass transmitter be removed from aircraft.

1-6. Description

Figure 1-1 shows major components of compass calibrator; table 1-2 lists general characteris-

tics. The following paragraphs describe physical characteristics of each component.

1-8. Control Console

The MC-2 Control Console (referred to as console) is the control panel and electronics package of compass calibrator. (See fig. 1-2 through 1-4.) Connectors, switches, controls, indicators, meters, and angle indicator readout are front panel mounted and protected by the case cover. Electronic subassemblies are rack mounted behind the front panel and inclosed by the console case. Four connectors 1J1 through 1J4 accept cables as designated by their front panel callouts. Two channels of switches, indicators, and controls located below connectors are means of programming E1 and E2 regulated dc power supplies. A selector switch for four operational modes and the meters that monitor signals and voltages are mounted in line across center of front panel. Lower portion of front panel contains a selector switch for 15-degree heading increments, power switch, power indicator excitation voltage control, and angle indicator heading and error readout. Angle indicator function switches are located below readout panel. Console, part No. 2587177, incorporates drum-type readout. Consoles, part Nos. 2588219 and 2591798, have tape-type readout and readout oscillation DAMPING switches.

Table 1-1. Components of the Compass Calibrator

Component of compass calibrator	Part No.		
	2592080-2	2592030-4	2592080-5
Control Console	2587177	2588219	2588219
Magnetic Field Monitor	2587133	2588224	2588224
Remote Transmitter Turntable	2587138	2588223	2588223
Alignment Equipment	2587117	2588225	2588225
Field Tester		———	2587311
Tripod Assembly (2)	2587149-1	2587149–1	2587149-1
Adapter Box	2587103	2587103	2587103
Cable (W1)	2580313	2580313	2580313
Cable (W2)	2580314	2580314	2580314
Cable (W3)	2580315	2580315	2580315
Reel Assembly	2587139–1	2587139–1	2587139-1
Reel Assembly	2587139–2	2587139–2	2587139-2
Reel Assembly	2587139-3	2587139–3	2587139-3

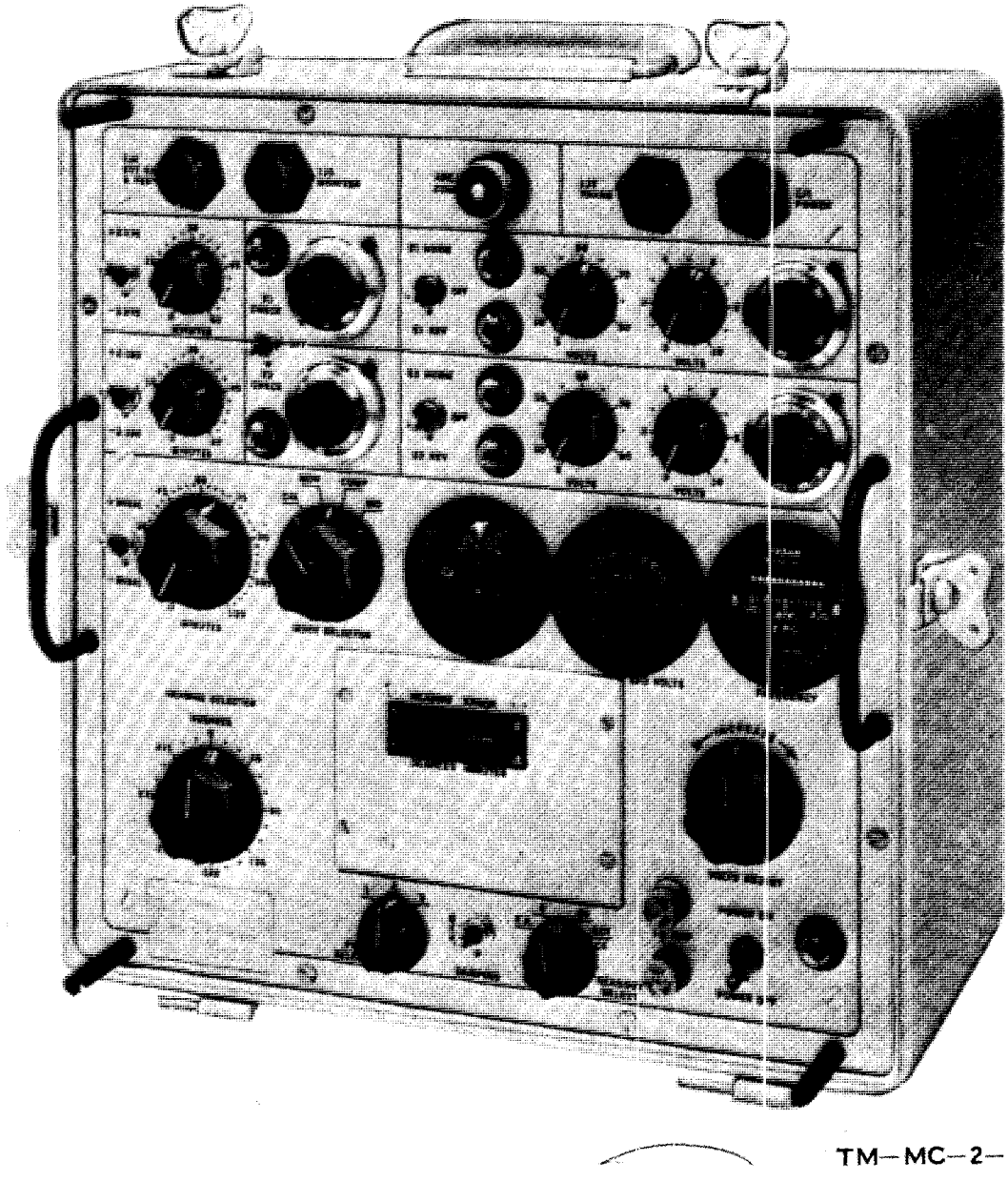

Figure 1-2. Console front panel.

TABLE 1-1A. NOMENCLATURE FOR COMPASS CALIBRATOR, PART NO. 2592080-8

Part No.	Common Name	Army Nomenclature
2592080-8	Compass Calibrator	Calibrator Set, Magnetic Compass AN/ASM-339 (V) 1
2503569	Cover	Cover, Projective, Instrument CW-999/ASM-339 (V)
2555563	Plate	Plate Assembly, Support MT-3986/ASM-339 (V)
2555564	Plate	Plate Assembly, Support MT-3987/ASM-339 (V)
2580280	Plate	Mounting Plate, Transmitter MX-8112/ASM-339 (V)
2580284	Crank	Crank, Hand MX-8108/U
2580305	Case	Case, Calibrator Set CY-6479/ASM-339 (V)
2580314	Cable (W2)	Cable Assembly, Special Purpose, Electrical CX-10867/U (50 foot)
2580315	Cable (W3)	Cable Assembly, Special Purpose, Electrical CX-10867/U (200 foot)
2581004	Case	Case, Alignment-Electronic Equipment CY-6481/ASM-339 (V)
2581016-1	Case	Case, Test Equipment CY-6480/ASM-339 (V)
2581019	Turntable Assembly	Turntable Assembly, Remote Transmitter MX-8111/ASM-339 (V)
2587103	Adapter Box	Interconnecting Box J-2812/ASM-339 (V)
2591847	Monitor Assembly	Monitor Assembly MX-8113/ASM-339 (V)
2587139-1	Reel	Reel, Cable RL-255/U
2587139-2	Reel	Reel, Cable RL-256/U
2587139-3	Reel	Reel, Cable RL-257/U

TABLE 1-1A. NOMENCLATURE FOR COMPASS CALIBRATOR, PART NO. 2592080-8 (CONT)

Part No.	Common Name	Army Nomenclature
2587149-1	Tripod	Tripod, Electronic Equipment MX-8114/U
2587165	Magnetic Azimuth Reference Detector	Detector Assembly, Magnetic Azimuth DT-354/ASM-344
2587311	Field Tester	Field Tester, Magnetic Compass Calibrator AN/ASM-344
2588196	Cable (W4)	Cable Assembly, Special Purpose, Electrical Branched CX-10869/ASM-344
2591798	Control Console	Control, Magnetic Compass Calibrator Set C-7694/ASM-339 (V)
2588223	Remote Transmitter Turntable	Turntable Group, Remote Transmitter OQ-30/AsM-339 (V)
2591799	Magnetic Field Monitor	Monitor, Magnetic Field OQ-31/ASM-339 (V)
2588225	Alignment Equipment	Alignment Kit, Electronic Equipment MK-1106/ASM-339 (V)
2588320	400-Cycle Power Supply	Power Supply PP-6056/ASM-339 (V)
2589076	Cable (W1)	Cable Assembly, Special Purpose, Electrical CX- 10868/U (100 foot)
1778392	Telescope	Telescope, Azimuth SU-45/ASM-339 (V)
2581016	Case	Case, Test Equipment CY-6482/ASM-339 (V)
2580821	Case	Case, Electronic Test Set CY-6494/ASM-344
2587955	Panel	Panel, Test, Electrical SB-3198/ASM-344

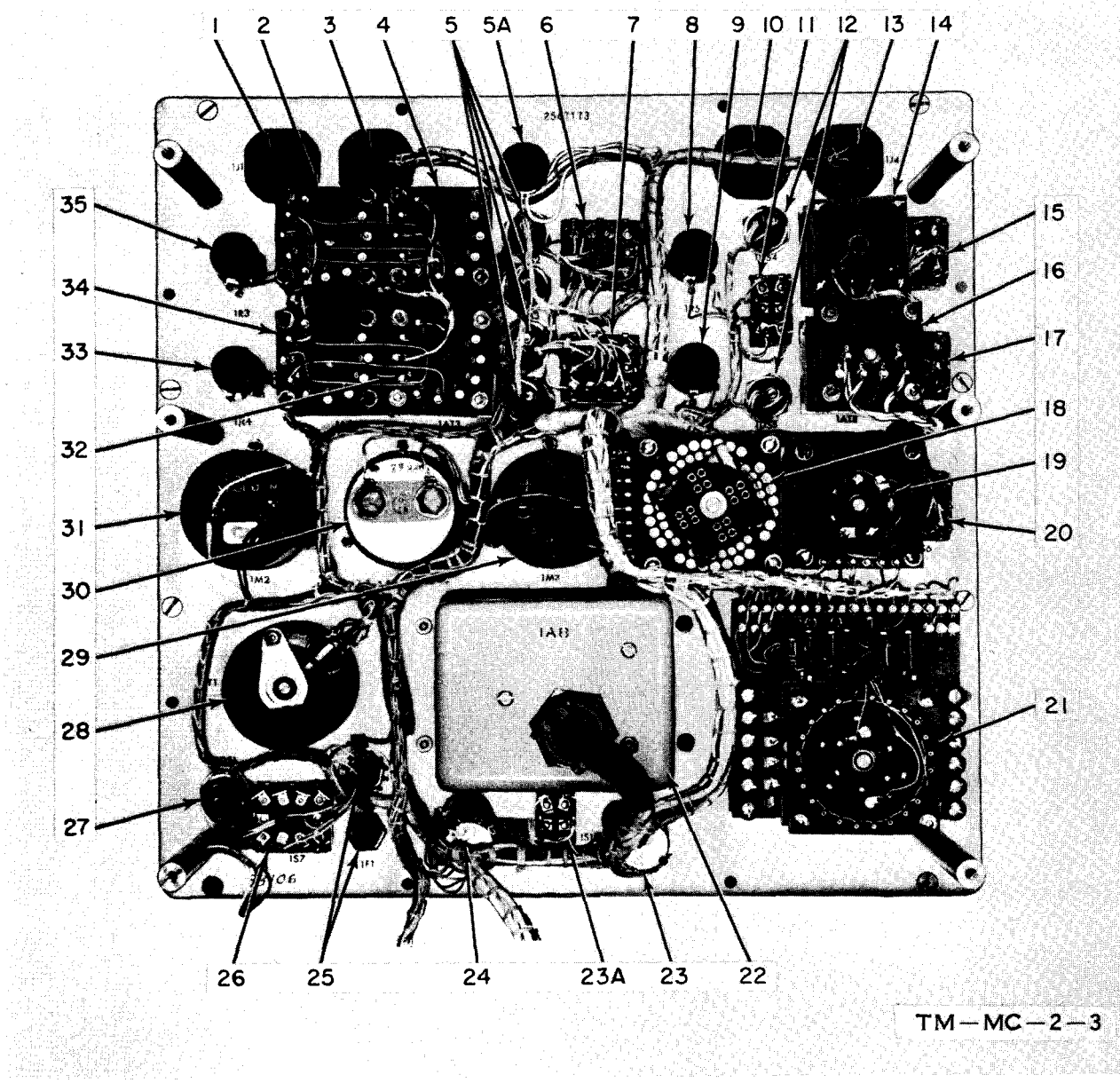

1. 1J 1 POWER Connector
2. 1AT4 E1 VOLTS Switch (0 to 10)
3. 1J 2 TRANS Connector
4. 1AT2 E1 VOLTS Switch (5 to 90)
5. 1DS2, 1DS3, 1DS6, and 1DS7 Indicators
5A. 1R7 AREA COMP Vernier Control (Used only in Console, Part No. 2591798)
6. 1S1 E1 NORM. -REV. Switch
7. 1S2 E2 NORM.-REV. Switch
8. 1R5 E1 CHECK Control
9. 1R6 E2 CHECK Control
10. 1J 3 MONITOR Connector
11. 1S3 E1-E2 CHECK Switch
12. 1DS4 and 1DS5 Indicators
13. 1J4 EXT CX & TEST Connector
14. 1AT7 Δ270 MINUTES Switch
15. 1S5 Δ270 Polarity Switch
16. 1AT8 Δ180 MINUTES Switch
17. 1S4 Δ180 Polarity Switch
18. 1S8 MODE SELECTOR Switch
19. 1AT6 MISAL MINUTES Switch
20. 1S6 MISAL Polarity Switch
21. 1AT1 HEADING SELECTOR Switch
22. 1A8 Angle Indicator
23. 1S10 FV SELECT Switch
23A. 1S11 DAMPING Switch (Used only in Console, Part No. 2588219 and 2591798)
1S9 READOUT SELECT Switch
1 F1, 1F2 Fuses, and Fuseholders
1S7 POWER ON-OFF Switch
1DS1 Indicator
1T1 VOLTS ADJUST Control
1M3 NULL INDICATOR Meter
1M1 EXC VOLTS Meter
1M2 FREQUENCY Meter
1AT3 E2 VOLTS Switch (5 to 90)
1R4 E2 Vernier Control
1A25 E2 VOLTS Switch (0 to 10)
1R3 E1 Vernier Control

Figure 1-3. Console Front Panel, Rear View.

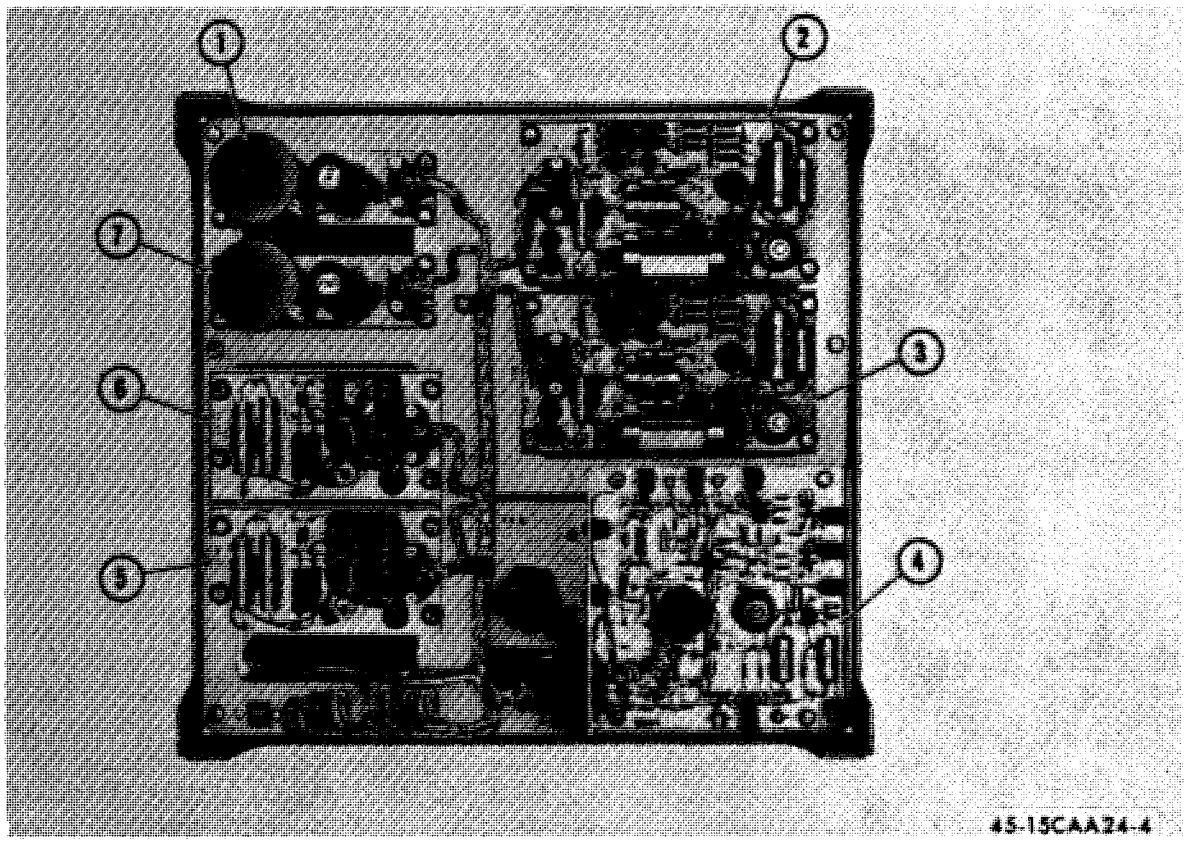

1. 1A3 E1 Gearcase-Motor
2. 1A1 E1 Regulator Amplifier
3. 1A2 E2 Regulator Amplifier
4. 1A7 Angle Indicator Amplifier
5. 1A6 E2 Regulator Supply
6. 1A5 E 1 Regulator Supply
7. 1A4 E2 Gearcase-Motor

Figure 1-4. Typical Console Rack-Panel Assembly

1-9. Rack assembly supports electronic subassemblies. These are card-type terminal boards containing electronic parts and wiring necessary to produce d-c regulated voltages to simulate the earth's magnetic field, and containing angle indicator amplifier to drive the angle indicator. D-c supplies are separated into two channels, E1 and E2, each containing regulator supply, motor controller, and regulator amplifier. Angle indicator and angle indicator amplifier subassemblies constitute null detection and readout circuit. Front panel and rack assembly is removable from the case and subassemblies are detachable from rack assembly.

1-10. MAGNETIC FIELD MONITOR. See figures 1-5 and 1-5A. Magnetic Field Monitor (referred to as Monitor) is an engineer's transit that has been modified to operate as a component of the Compass Calibrator. Modification consists of installing a magnetic sensing element in place of the magnetic compass. Monitor is made of nonferrous and nonmagnetic materials. Monitor has a telescope, horizontal circle and vernier azimuth scales with scale adjustment, screws, levels, and leveling adjustment screws. Telescope is 22 power with an interior focusing optical system, and will rotate 180 degrees in a vertical plane. A rain hood is included as an accessory. Monitor, Part No. 2587133, is mounted on a slide-out board. Monitor, Part No. 588224 and 2591799, is mounted in a polyethylene cushioned carrying case. Both Monitor and metal carrying case are finished in aviation gloss yellow enamel.

1-11. REMOTE TRANSMITTER TURNTABLE AND CASE. See figures 1-6 and 1-6A. Turntable and Case (referred to as Turntable) is an engineer-type transit with the compass, vertical circle, and telescope removed. Also included with Turntable is a transmitter mounting bracket and a rain hood. Turntable, Part No. 2587138, is mounted on a slide-out board, and includes the quick connector. Turntable, Part No. 2588223, is mounted in a polyethylene cushioned carrying case, and quick connector is packaged with alignment equipment. Both Turntable and metal carrying case are finished in aviation gloss yellow enamel.

1-12. TRIPOD ASSEMBLY. See figure 1-1. Tripod Assembly (referred to as Tripod) is collapsible and extendible to various heights by adjusting the legs. Each leg has a locking knob screw, a movable cross brace, and optional ball joint composition or pointer type feet. The mount accepts and secures Monitor and Turntable. Tripod is constructed of nonmagnetic and nonferrous materials and finished in aviation gloss yellow enamel.

1-13. CABLE ASSEMBLIES, REELS, AND RACKS. There are three interconnecting cables for Compass Calibrator: power cable, monitor cable, and transmitter cable. Power cable is 100 feet long, monitor cable is 200 feet long, and transmitter cable is 50 feet long. Each cable is identified and each mating connector is marked with interconnection information. Cables are stored on the reel and rack assemblies, which are sized to accommodate different length cables.

1-14. ALIGNMENT EQUIPMENT. See figures 1-7 and 1-7A. Alignment Equipment consists of a telescope with a Hookes joint, two plate assemblies, shaft coupling, quick connector, plumb bob and adapter, screwdrivers, magnifier, wrenches, and sunshade. Parts used are dependent upon aircraft and transmitter. Telescope is fixed-focus type, 8 power, with 360- degree azimuth rotation. Drum dial fine adjusts azimuth, and azimuth lock prevents unwanted rotation. Alignment Equipment, Part No. 2587117, includes C-2 type quick connector; Part No. 2588225 includes remote transmitter type quick connector.

1-15. COMPASS ADAPTER BOX. See figure 1-8. Compass adapter box is a formed metal junction box containing three connectors, a toroid, four capacitors, and wiring harness. Connectors are external with all interconnections internal. Bottom plate is removable for access. Compass adapter box is finished in aviation gloss yellow enamel.

1-15A. FIELD TESTER. See figure 1-8A. The Field Tester is a portable metal encased tester consisting of a test panel, shield can assembly, and magnetic azimuth reference detector. All connectors, controls, switches, and electronic parts are mounted on the test panel. The shield can assembly contains a valve assembly within two nesting magnetic shield cans. The magnetic azimuth reference detector consists of a 6 power telescope with azimuth adjustment and flux valve assembly mounted to a triangular support plate. The valve assembly has an attaching cable assembly. The Field Tester interconnecting cable assemblies and the magnetic azimuth reference detector are stored in the case lid. The Field Tester is a component of Compass Calibrator, Part No. 2592080-5 and -8, and is special test equipment for Compass Calibrator, Part No. 2592080-2 and -4.

1-15B. 400-CYCLE POWER SUPPLY. See figure 1-8B. The 400-Cycle Power Supply (referred to as Power Supply) is a solid-state static inverter mounted on a metal base assembly. The base assembly contains the power connectors and a variable resistor. A protective handle attached to the base assembly provides ease of portability. The solid- state electronics is packaged in the static inverter subassembly and utilizes external heat sinks mounted on its housing. A detachable cable assembly connects the inverter to the connectors and variable resistor in the base assembly. The base assembly is finished in aviation glass yellow enamel. The power supply is a component of Compass Calibrator, Part No. 2592080-8.

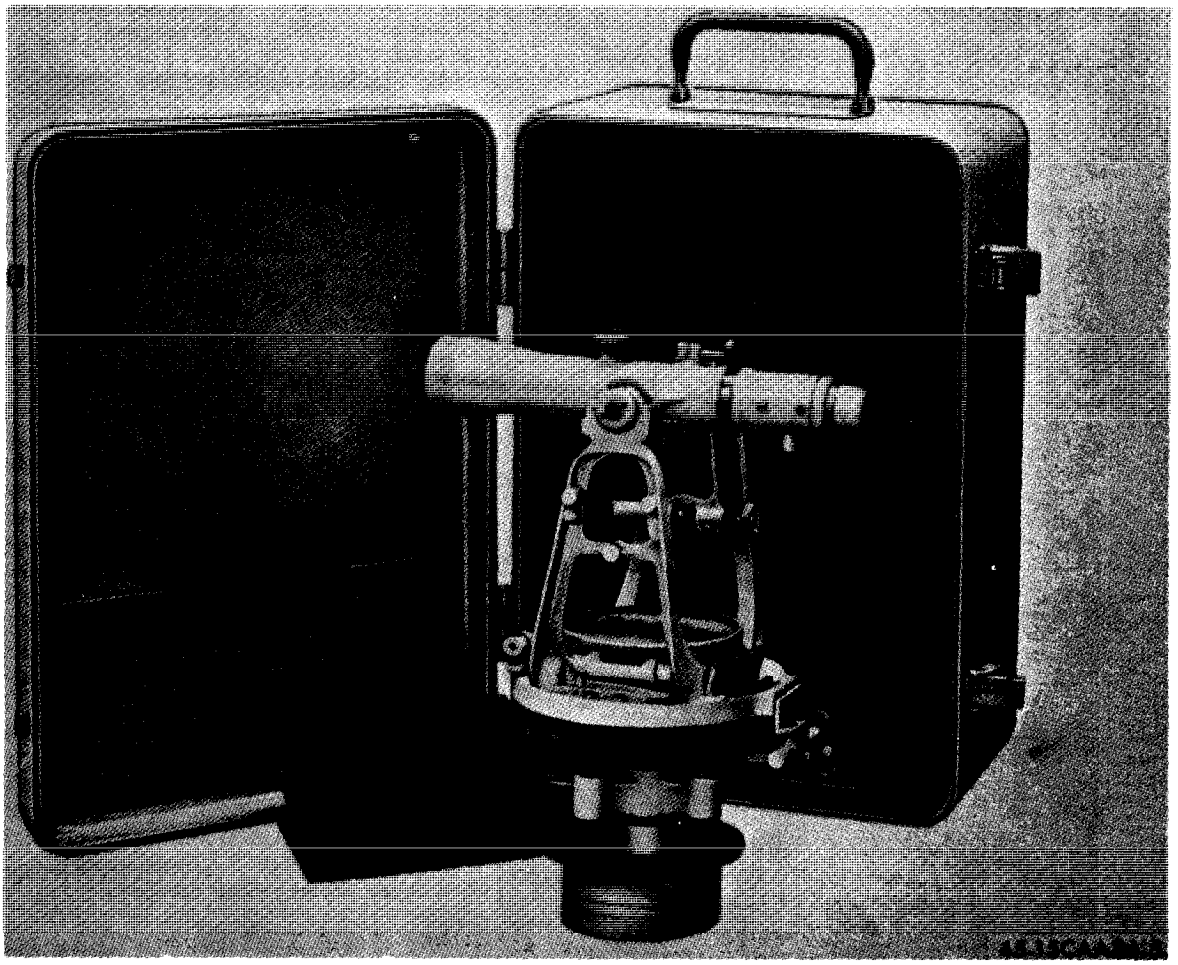

Figure 1-5. Magnetic Field Monitor and Case, Part No. 2587133

TABLE 1-2. GENERAL CHARACTERISTICS

Unit	Height (inches)	Width (inches)	Depth (inches)	Weight (pounds)
Compass Calibrator (in case)	21	42 1/4	27	300
Console (in case)	17 1/4	17 1/4	11	37
Monitor (in case)	19 1/4	13	8 3/4	24
Turntable (in case)	19 1/4	13	8 1/2	21 1/2
Power Supply	7 5/8	9 1/4	8 7/8	11
Adapter Box	2 1/4	5 3/4	8 1/4	2
Remote Alignment Equipment (in case)	4 1/2	13	18 1/2	9 1/2
Field Tester	9 1/2	8	8 7/8	11
Power Requirements For Part No. 2592080-2, -4, and -5				
Console	115 ± 10 volts ac, 400 ± 5 cps, single phase, 1 amp, 100 va			
Power Requirements For Part No. 2592080-8				
Power Supply	27.5 ± 1.5 volts dc, 5 amperes, minimum			

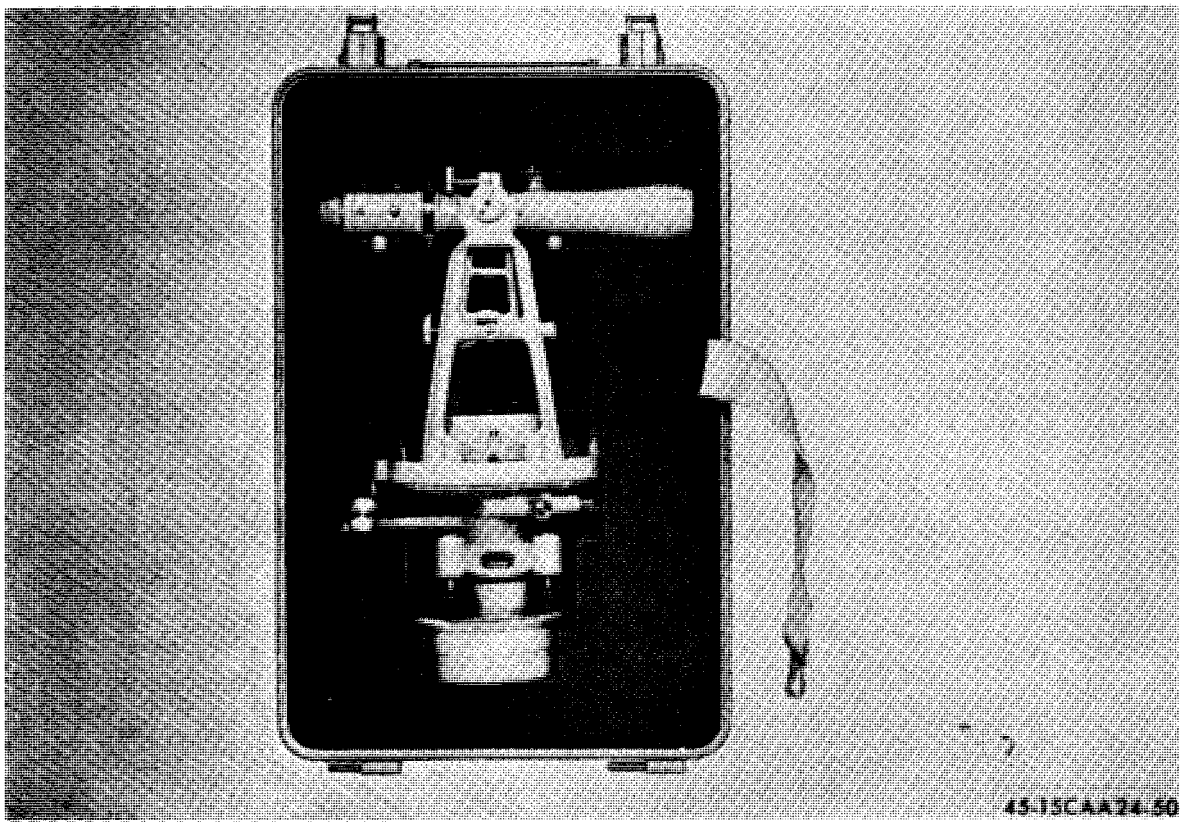

Figure 1-5A. Magnetic Field Monitor in Case, Part No. 2588224 and 2591799.

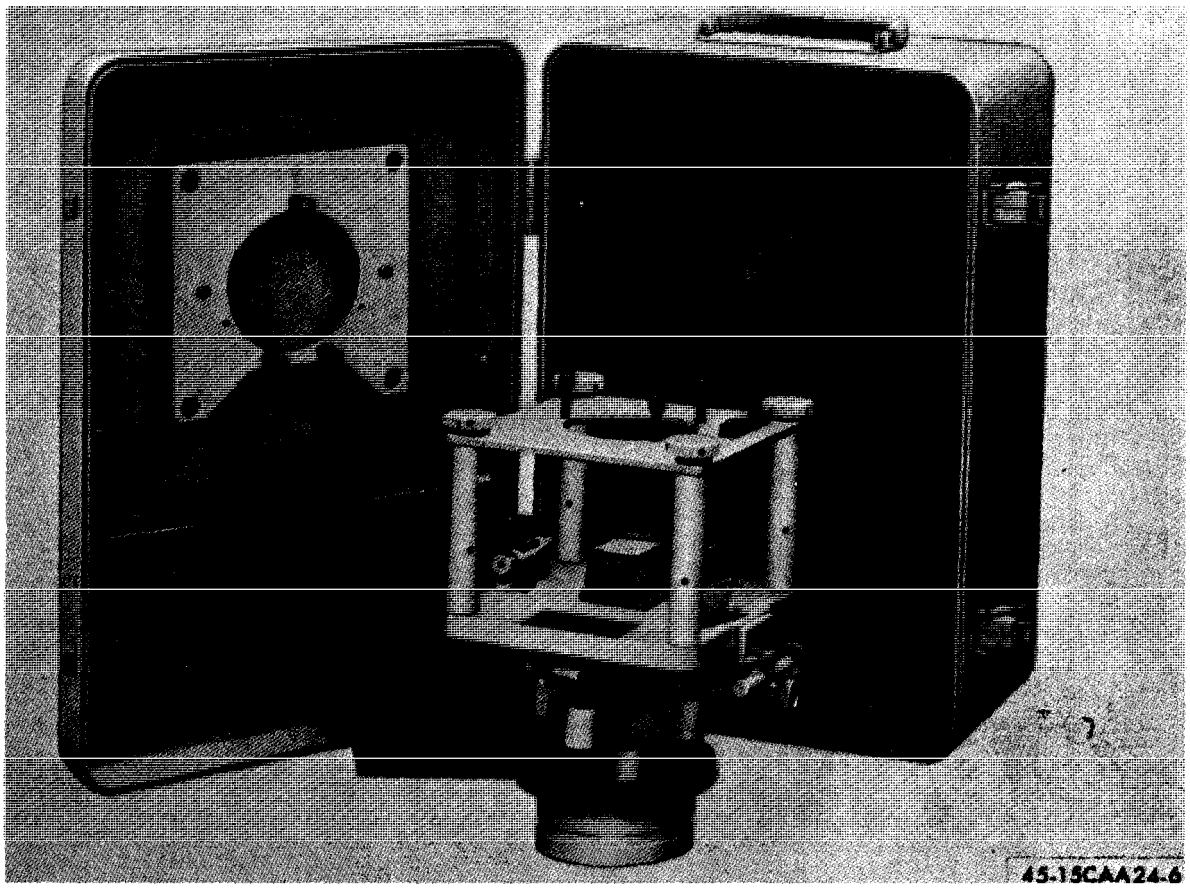

Figure 1-6. Remote Transmitter Turntable and Case, Part No. 2587138

1-16. ACCESSORY KITS. Accessory kits containing special purpose cables and auxiliary alignment equipment are furnished by the airframe manufacturer. Instructions for use are provided in the applicable aircraft manuals.

1-17. PRINCIPLES OF OPERATION.

1-18. The process of compass swinging is rotation of an aircraft to prescribed magnetic headings and notation of error between actual magnetic heading and that indicated by aircraft magnetic compass. Compass Calibrator is used to conduct area magnetic survey to determine magnitude and direction of earth's magnetic field at a proposed aircraft compass swing site, and to conduct actual compass swing. Console provides controlled d-c currents for the transmitter. Monitor detects magnitude and direction of earth's magnetic field and supplies this information to Console. Alignment Equipment is used with Turntable to optically align the aircraft compass system transmitter.

1-19. An explanation of theory of operation of magnetic sensing element used in Monitor and transmitter will facilitate understanding operation of Compass Calibrator. Magnetic sensing element is an electrically excited device that detects its orientation with respect to horizontal component of earth's magnetic field and transmits this information to compass system in form of an a-c signal. Sensing element (figure 1-9) has three secondary coils, each wound around a leg of a Y-shaped spider core, and an excitation (primary) coil wound around the center of the core. When an a-c signal is applied to primary coil, a voltage is induced in secondary coils as a function of coil orientation with respect to earth's magnetic field. When secondary coils are connected back to back with synchro stator of compass system, voltages induced in secondary coils by horizontal component of earth's field are transmitted to corresponding coils in synchro stator, creating a signal vector. Orientation of this signal vector with respect to stator represents the heading to earth's magnetic field. Other components in the compass system translate orientation of this signal vector into a visual or electrical indication of the aircraft magnetic bearing.

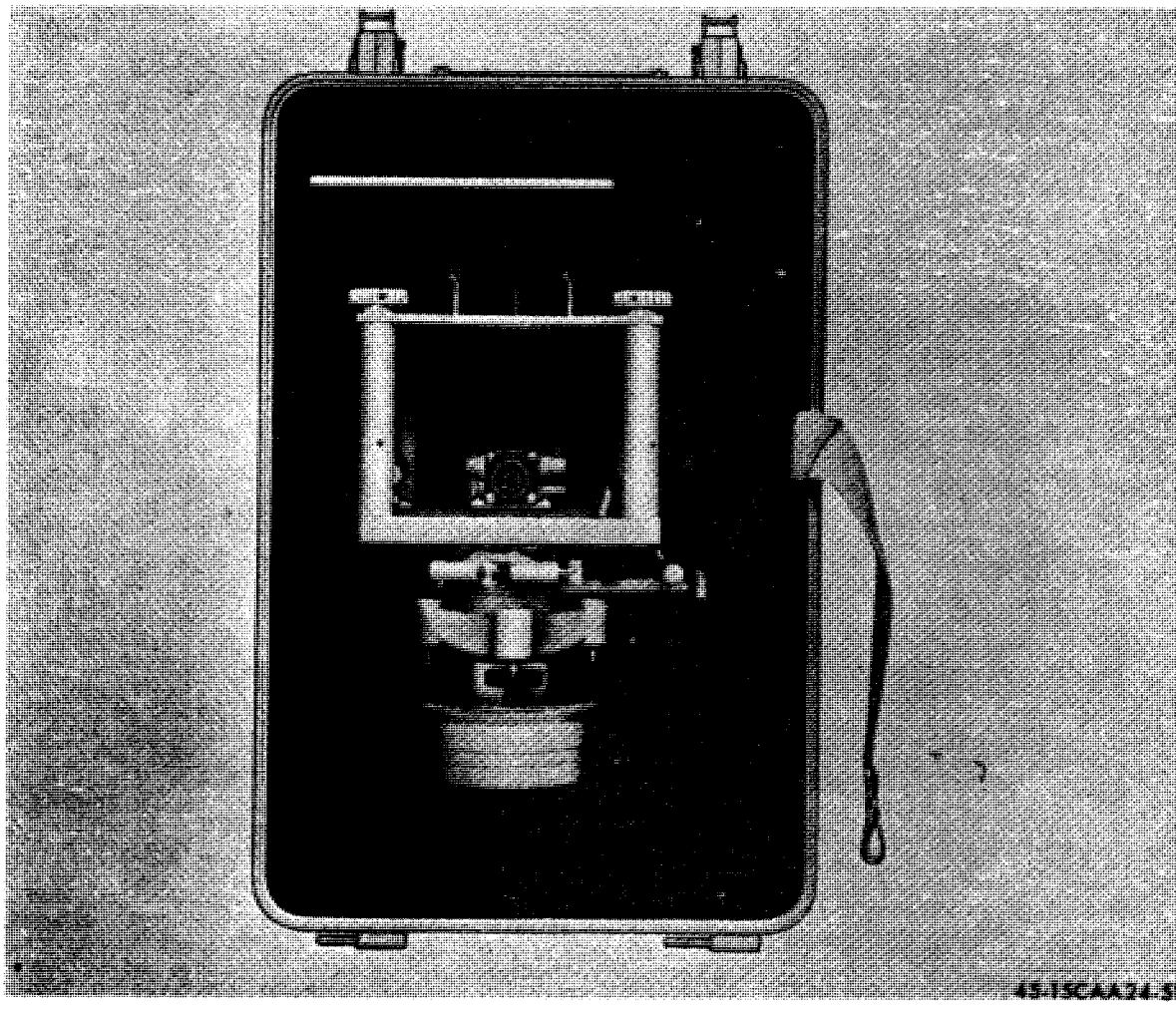

Figure 1-6A. Remote Transmitter Turntable in Case, Part No. 2588223

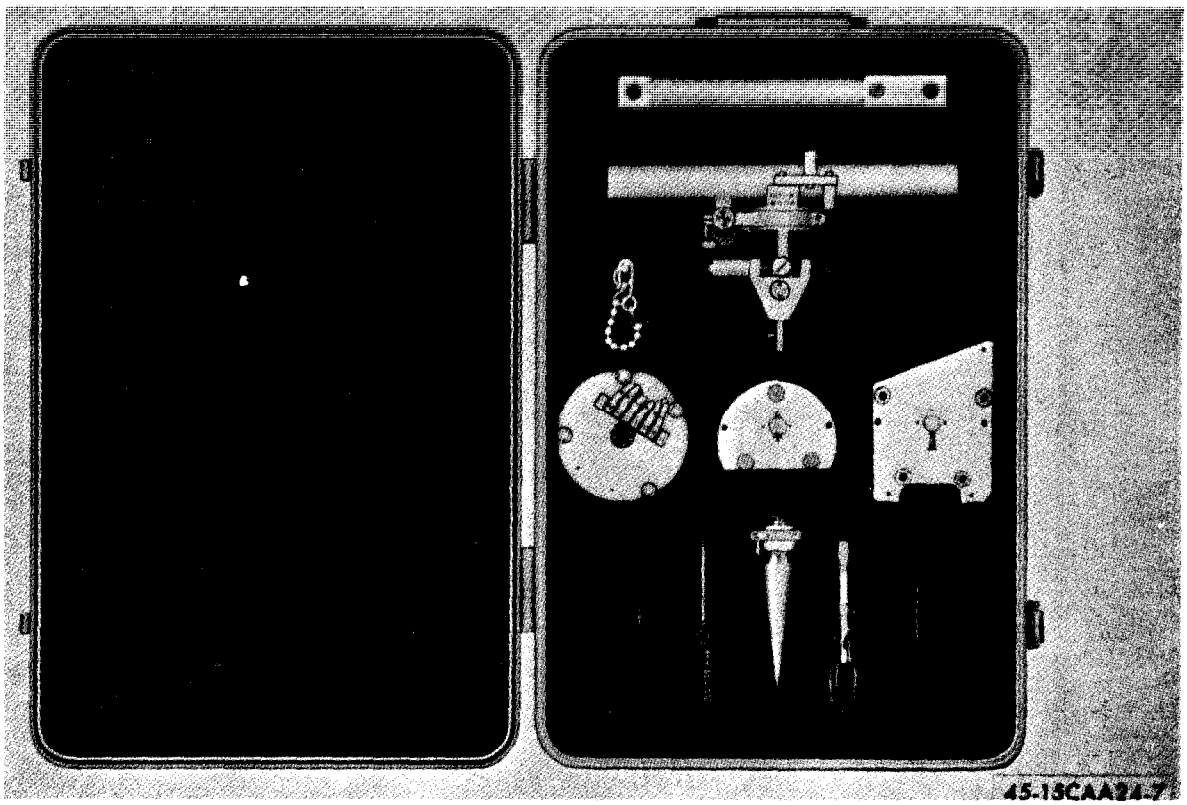

Figure 1-7. Alignment Equipment, Part No. 2587117

1-20. In an electrical compass swing, a d-c magnetic field is generated in transmitter and varied in magnitude and direction so that, in combination with horizontal component of earth's field, an equivalent earth's field is simulated in transmitter at a desired heading. Errors in compass system are measured as difference between magnetic heading of aircraft as shown by aircraft compass indicator and magnetic heading of simulated earth's field as shown by setting of HEADING SELECTOR switch in Console. Error is positive if compass indication exceeds setting of HEADING SELECTOR switch, negative if compass indication is less than switch setting.

1-21. Controlled d-c currents are applied to secondary coils of transmitter to generate magnetic field of electrical swing. An E1 current is applied to leg A coil of transmitter to generate a field aligned to leg A. In electrical swing this field is used to provide north-south component of simulated earth's field. An E2 current applied through leg B and C coils generates two fields each aligned to the respective coil. These fields are so oriented that north-south components of these two fields cancel, leaving one east-west component, sum of two individual east-west components. See figure 1-10. By reversing direction of current flow, east-west component is rotated 180 degrees.

1-22. HEADING SELECTOR of Console controls heading of simulated field by varying amount of resistance in series with each leg to vary magnitudes of currents. For example, to simulate a 90-degree heading, a 90-degree setting of HEADING SELECTOR switch adjusts resistance in series with leg A of transmitter so that a field is generated parallel to leg A that just cancels existing earth's field. At same time, HEADING SELECTOR adjusts resistance in series with legs B and C so that a field is generated that also equals existing earth's field and is at a 90-degree heading. (See figure 1-10.) At 180-degree electrical heading, resistance to leg A is decreased so that equivalent of two earth's fields is generated by leg A coil, one earth's field cancels existing earth's field, the other simulates 180-degree heading. No current is applied to legs B and C in the 180-degree heading. Other compass headings are similarly produced.

1-23. Magnitude of E1 and E2 voltages required to produce necessary E1 and E2 currents of electrical swing is determined during calibration operation. With leg A of transmitter aligned to magnetic north, an E1 voltage is applied through a fixed resistor to leg A coil and increased until NULL INDICATOR shows that field generated in transmitter has canceled existing earth's field. See figure 1-11. Three readings are taken with transmitter positioned to a

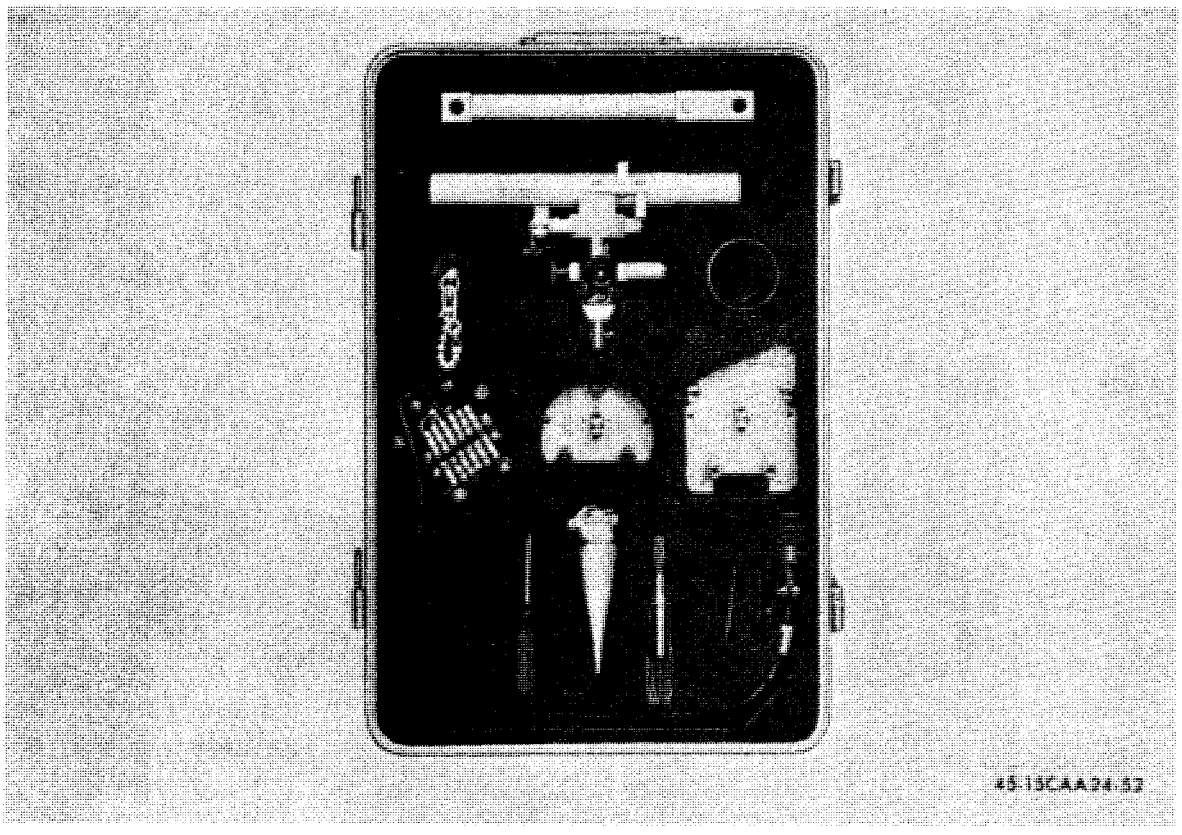

Figure 1-7A. Alignment Equipment, Part No. 2588225

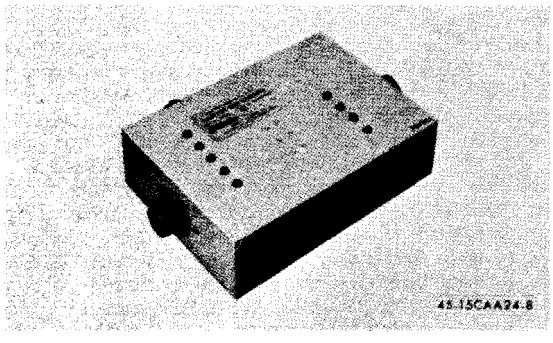

Figure 1-8. Compass Adapter Box

0-degree heading and three are taken with transmitter positioned to a 180-degree heading. In the average computed from six readings, errors resulting from any random positioning of transmitter pendulously suspended sensing element are canceled, as well as any residual magnetism in transmitter. E2 voltage is measured with transmitter rotated to 90- and 270 -degree headings. At these headings an E2 voltage applied through a fixed resistor to legs B and C will result in a magnetic field aligned with and opposing earth's magnetic field. See figure 1-12. E2 voltage is computed from three readings taken with transmitter positioned to a 90-degree heading and three taken with transmitter at a 270-degree heading.

1-24./@nce magnitude of applied field is a function of magnitude of earth's field, it is necessary to compensate for any variations that may occur in earth's

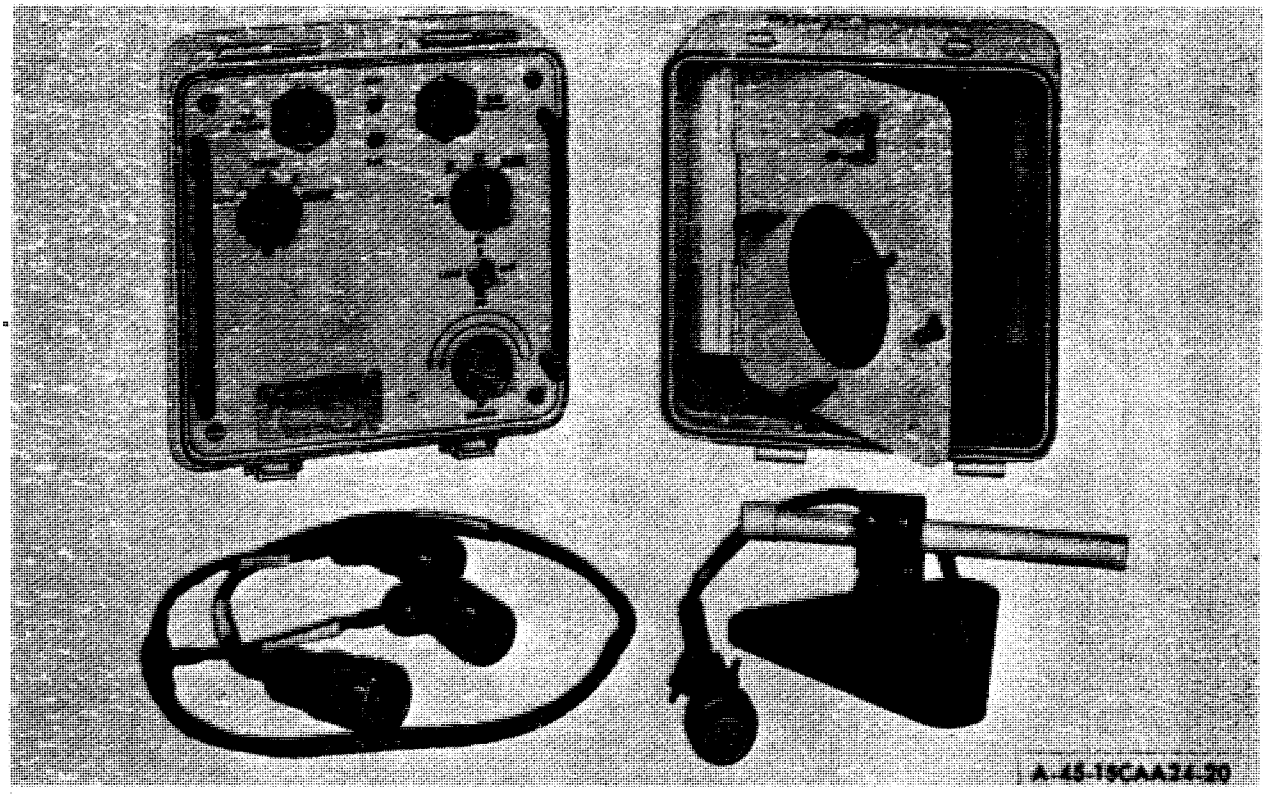

Figure 1-8A. Field Tester

Figure 1-8B. 400-Cycle Power Supply

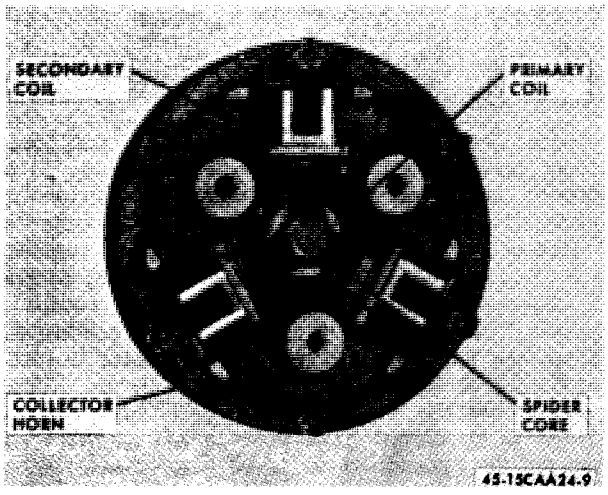

Figure 1-9. Monitor Magnetic Sensing Element

field between the time transmitter is aligned and the time electrical swing is conducted. This is done by making sensitivity of Monitor element equal to sensitivity of transmitter and using Monitor to determine what adjustment must be made to E 1 and E 2 voltages to compensate for changes in field. After E 1 and E2 voltages are determined by alignment procedures, they are applied individually through a variable E 1 and E2 check resistor to leg A of Monitor. With Monitor positioned to a magnetic-north heading and synchro rotor turned 90 degrees away from null point, E 1 voltage is applied to leg A of Monitor and E1 check resistance adjusted until NULL INDICATOR shows that field generated in Monitor exactly cancels earth's field. See figure 1-13. This same procedure is used to determine an E2 check resistance setting. In this manner sensitivity of Monitor has been made to appear equal to sensitivity of transmitter; that is, E1 and E2 voltages used to cancel earth's field in transmitter will cancel earth's field in Monitor. During electrical swing, E1 and E2 voltages will again be applied individually through check resistors to leg A of Monitor. With check resistors set at values determined in alignment procedure, and with synchro rotor positioned 90 degrees from null point, E1 and E2 voltages are then adjusted until a null reading on NULL INDICATOR shows that earth's field existing at time of electrical swing is canceled. Thus E 1 and E2 voltages have been adjusted to compensate for changes in earth's magnetic field. Applied directly to aircraft-mounted transmitter, through heading selector, they will generate the intended electromagnetic field.

1-24A. (Applicable to Part No. 2592080- 8.) Since magnitude of applied field is a function of magnitude of earth's field, it is necessary to compensate for any variations that may occur in earth's field between the time transmitter is aligned and the time electrical swing is conducted. This is done by making sensitivity of Monitor element equal to sensitivity of transmitter and using Monitor to determine what adjust ment must be made to E 1 and E 2 voltages to compensate for changes in field. After E1 and E2 voltages are determined by alignment procedures, E 1 voltage is applied to leg A of Monitor through three variable resistors. See figure 1-13A. The AREA COMP control setting is determined during area magnetic survey. This setting compensates for any difference in field strength between Monitor and transmitter locations. The Monitor sensitivity is factory adjusted to standardize the Monitor for use with precalibrated transmitters. With Monitor positioned to a magnetic-north heading, synchro rotor at 90-degree setting, and E1 voltage applied to leg A of Monitor, E1 CHECK control is adjusted until earth's field in leg A is cancelled. This results in a null output of the synchro rotor as indicated by the console NULL INDICATOR. E2 voltage is applied to leg A of Monitor through the same circuitry as E1 voltage. In this manner, sensitivity of Monitor has been made to appear equal to sensitivity of transmitter; that is, E1 and E2 voltages used to cancel earth's field in transmitter will cancel earth's field in Monitor. During electrical swing, E1 and E2 voltages will again be applied individually to leg A of Monitor. With check resistors set at values determined in alignment procedure, and with synchro rotor positioned 90 degrees from null point, E 1 and E2 voltages are then adjusted until a null reading on NULL INDICATOR shows that earth's field existing at time of electrical swing is canceled. Thus E1 and E2 voltages have been adjusted to compensate for changes in earth's magnetic field. Applied directly to aircraft-mounted transmitter, through heading selector, they will generate the intended electromagnetic field.

1-25. To achieve a precise electrical swing, a correction must be made to compensate for misalignment of transmitter from earth's magnetic field, as it exists at time of electrical swing. Misalignment correction is equal to sum of index error of transmitte r and amount of angular shift occurring in earth's field after indexing operation. A d-c current is applied to coils of legs B and C to generate a field that electrically aligns transmitter to earth's field. Magnitude of this current is controlled by resistor network of misalignment control.

1-26. Crosstalk error is quadrature component field produced when a magnetic field is generated within transmitter. Crosstalk error is caused by differing coil sensitivities and unequal airgaps separating collector horns. Quadrature component results in a field slightly offset from intended electrical heading. See figure 1-14. Crosstalk errors are measured at 90-, 180-, and 27 0-degree headings as difference between electrical swing error and manual swing error corrected for index error. (No quadrature field occurs in 0-degree heading as no E1 and E2 currents are applied to transmitter to simulate 0-degree heading.)

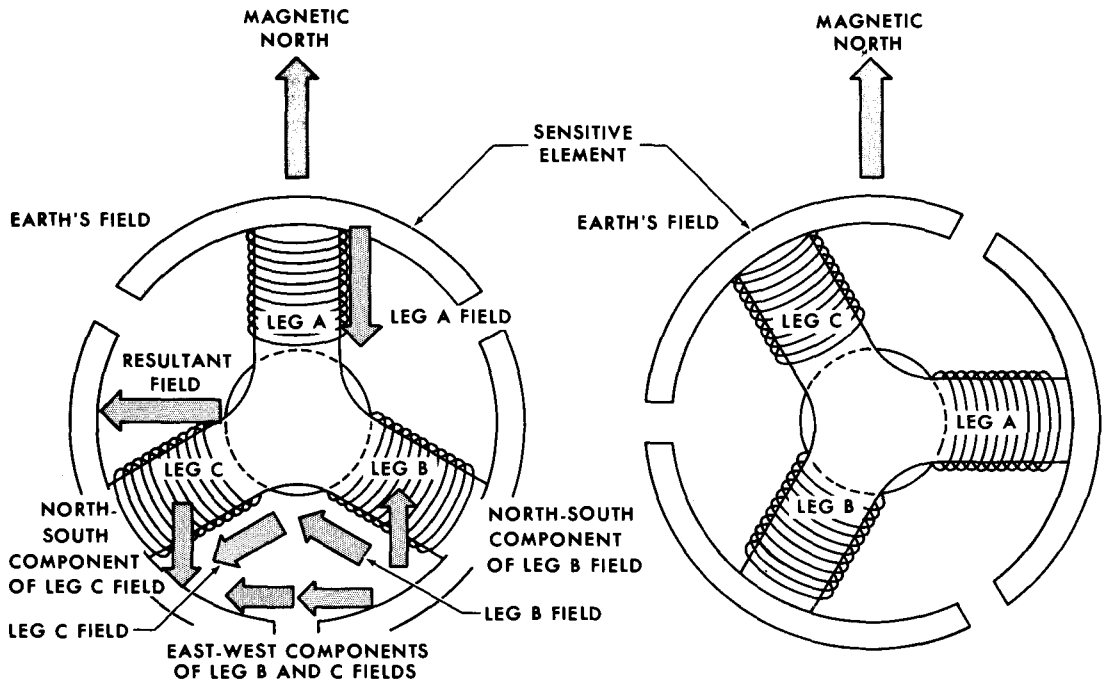

A. 90-DEGREE HEADING - ELECTRICAL SWING B. 90-DEGREE HEADING - MANUAL SWING

NOTE

1. Leg A field is equal to horizontal component of earth's magnetic field.
2. North-south component of leg B field is equal to north-south component of leg C field.
3. Sum of east-west components of leg B and C fields is equal to horizontal component of earth's magnetic field.

45-15CAA24-10

Figure 1-10. Electrical Swing and Manual Swing at a 90-Degree Heading

1-27. The Δ180 crosstalk error is determined from errors at 180-degree heading of transmitter. It is defined as electrical swing error at 180 degrees minus manual swing error at 180 degrees, corrected for index error. Expressed mathematically,

$$\Delta 180 = \left(\epsilon_{E_{180}}\right) - \left(\epsilon_{M_{180}}\right)$$

The Δ270 crosstalk error is determined from errors at 90- and 270-degree headings of transmitter. It is defined as electrical swing error at 90 degrees minus corrected manual swing error at 90 degrees plus electrical swing error at 270 degrees minus corrected manual swing error at 270 degrees. Expressed mathematically,

$$\Delta 270 = \left[\left(\epsilon_{E_{90}}\right) - \left(\epsilon_{M_{90}}\right)\right] + \left[\left(\epsilon_{E_{270}}\right) - \left(\epsilon_{M_{270}}\right)\right]$$

1-28. Compensation of quadrature field is accomplished by varying d-c currents to secondary coils of transmitter during electrical swing. D-c current, controlled by Δ270 resistor network in Console, is fed to leg A of transmitter during electrical swing. This d-c current sufficiently varies E 1 current to eliminate leg A component of quadrature field due to current flow in legs B and C. Similarly, d-c current controlled by Δ 180 resistor network is fed to legs B and C of transmitter to eliminate B and C component of quadrature field due to current flow in leg A.

1-29. Any constant error appearing in electrical compass swing is index error of synchros in compass system. It can be removed by rotating transmitter an angle equal and opposite to amount of constant

error. For subsequent electrical swings, misalignment correction must be readjusted to correspond with change in position of transmitter with respect to magnetic north. Index error of synchros in compass system will appear in subsequent electrical swings even though transmitter has been rotated. However, apparent index error will not be present in normal compass operation.

1-30. OPERATIONAL MODES. Four modes of operation are controlled by Console MODE SELECTOR switch:

a. Calibration (CAL).

b. Monitor (MON).

c. Compass (COMP).

d. Indicator (IND).

1-31. All readings taken with transmitter mounted on Turntable are made with Console in CAL mode. See block diagram, figure 1-15. In CAL mode, Console supplies an excitation voltage to transmitter. Output signal of transmitter is applied to control transformer in angle indicator of Console. In this mode E1 and E2 voltages are applied to transmitter through HEADING SELECTOR and E2 voltage is centertapped to ground.

(Applicable to Part No. 2592080-2, -4 and -5.)
1-32 All readings taken with Monitor are made with Console in MON mode. See figure 1-16. In MON mode, Console supplies an excitation voltage to sensing element of Monitor and output signal of Monitor is applied to control transformer in angle indicator of Console. In this mode E1 and E2 voltages are applied to leg A of Monitor through E1 and E2 CHECK resistors and E1-E2 CHECK switch and one side of E2 voltage is grounded.

1-32A. (Applicable to Part No. 2592080-8.) All readings taken with Monitor are made with Console in MON mode. See figure 1-16A. In MON mode, Console supplies an excitation voltage to sensing element of Monitor and output signal of Monitor is applied to control transformer in angle indicator of Console. In this mode, E1 voltage is applied to leg A of Monitor through E1 CHECK, AREA COMP, and monitor variable resistors. E2 voltage is applied to leg A of Monitor through same circuitry as E1. One side of E2 voltage is grounded in this mode.

1-33. The COMP mode is used to calibrate any compass system that has a null indication. See figure 1-17. In this mode transmitter excitation voltage is supplied by compass system and output signal of transmitter is supplied to compass system. Console supplies only d-c currents to transmitter to generate simulated magnetic headings.

1-34. The IND mode is used to calibrate compass systems that do not have null indication. See figure 1-18. In IND mode, transmitter excitation voltage is applied to control transformer in compass system. Output signal of control transformer is in turn applied to console null detection circuit to determine when system is aligned to transmitter signal. The IND mode can be used in place of COMP mode without affecting compass swing.

1-35. Block diagram of figure 1-19 shows manner that currents applied to the transmitter are controlled during electrical swing.

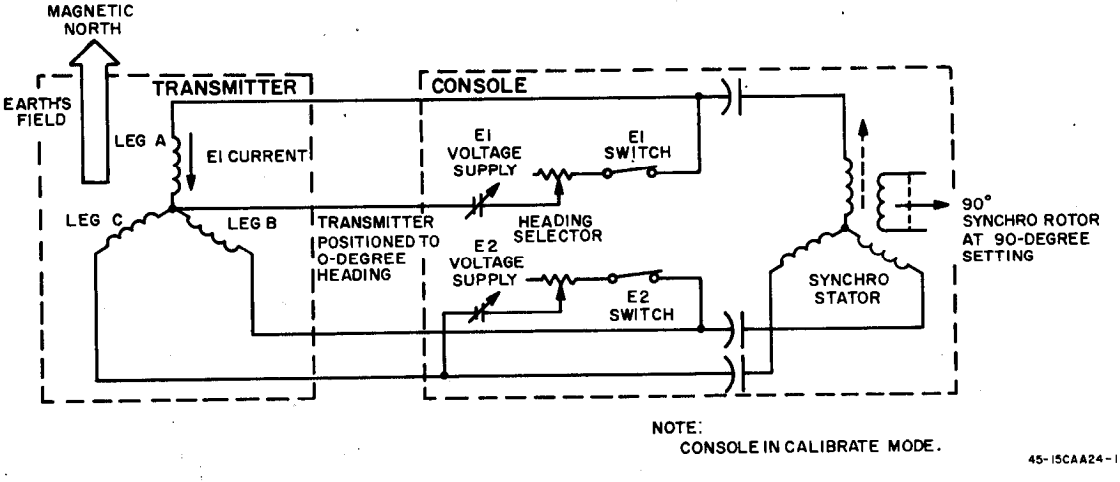

Figure 1-11. Circuit Used to Determine E1 Voltage

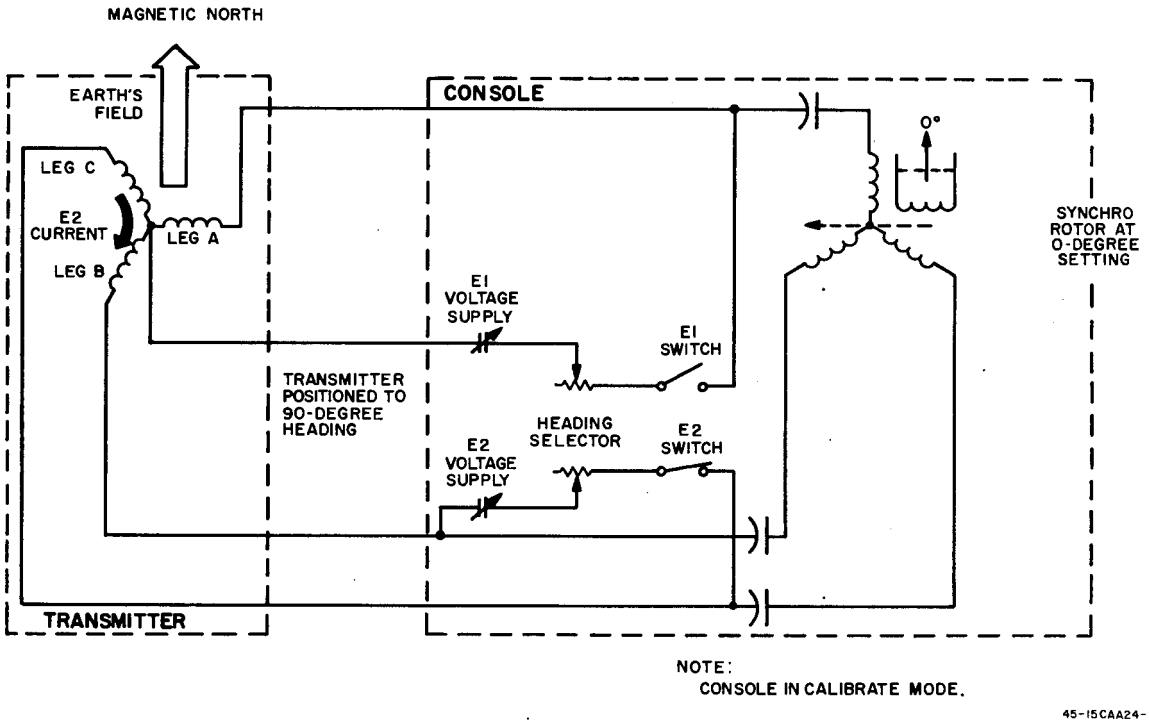

Figure 1-12. Circuit Used to Determine E2 Voltage

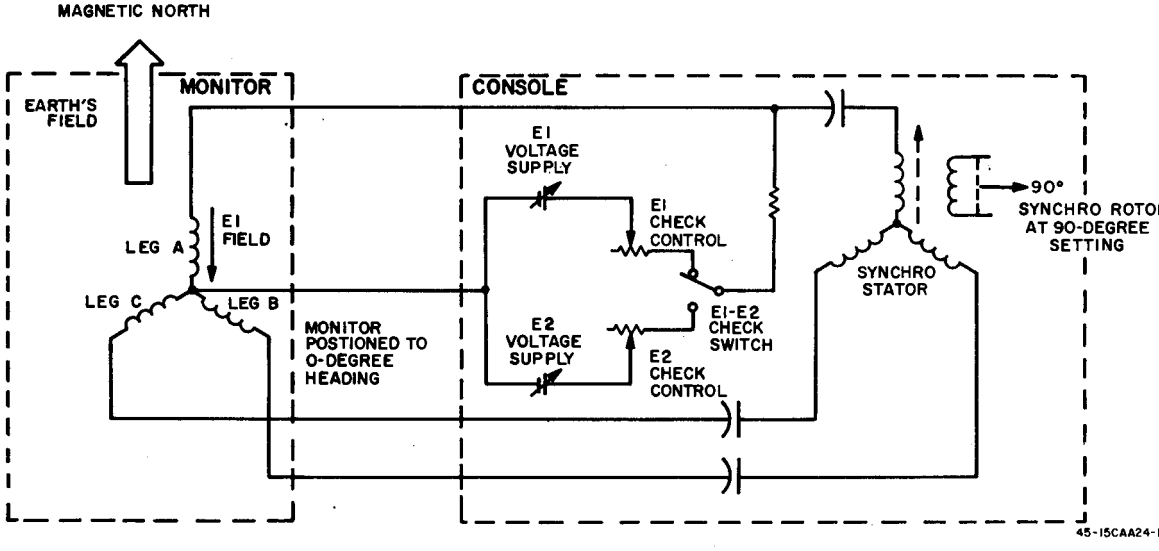

(Applicable to Part No. 2592080-2,-4, and -5.)

Figure 1-13. Circuit Used to Measure Strength of Earth's Field

1-36. **THEORY OF OPERATION.** (See figure 6-2, sheet 1.) E 1 and E 2 d-c regulated power supplies each consist of regulator supply, regulator amplifier, gearcase-motor, and voltage divider network made up of E 1 and E2 coarse, fine, and vernier voltage controls. These servo- regulated power supplies provide d-c currents necessary to simulate earth's magnetic field in Monitor and transmitter. Line and load are regulated to within 0.05 percent. Since E1 and E2 power supplies are identical, the following theory applies to both.

1-37. **REGULATOR SUPPLY, 1A5 OR 1A6.** The 115-volt, 400-cycle voltage from variable power transformer 1T1 is applied to primary of power transformer 1A5T1 of regulator supply. Voltage from secondary of 1A5T1 is rectified by diodes 1A5CR1 and 1A5CR2, filtered by a T-type filter (1A5R1, 1A5R2, and 1A5C1), and regulated by breakdown diode 1A5CR3. This voltage output is then applied to coarse, fine, and vernier voltage divider network. Transformer 1A5T1 also supplies input comparator voltage, B+ supply voltage for regulator amplifier, and motor-generator fixed-field voltage.

1-38. **REGULATOR AMPLIFIER, 1A1 OR 1A2.** To provide regulation, output from regulator supply through voltage divider network is applied across resistor 1A 1R26 and opposes voltage of a battery, 1A1BT1. If line or load should vary, a differential voltage is sensed, modulated by transistors 1A1Q5 and 1A1Q6, and amplified by transistors 1A1Q1, 1A1Q2, 1A1Q7, and 1A1Q8. Output transistors 1A1Q3 and 1A1Q4 drive motor control field in the gearcase-motor.

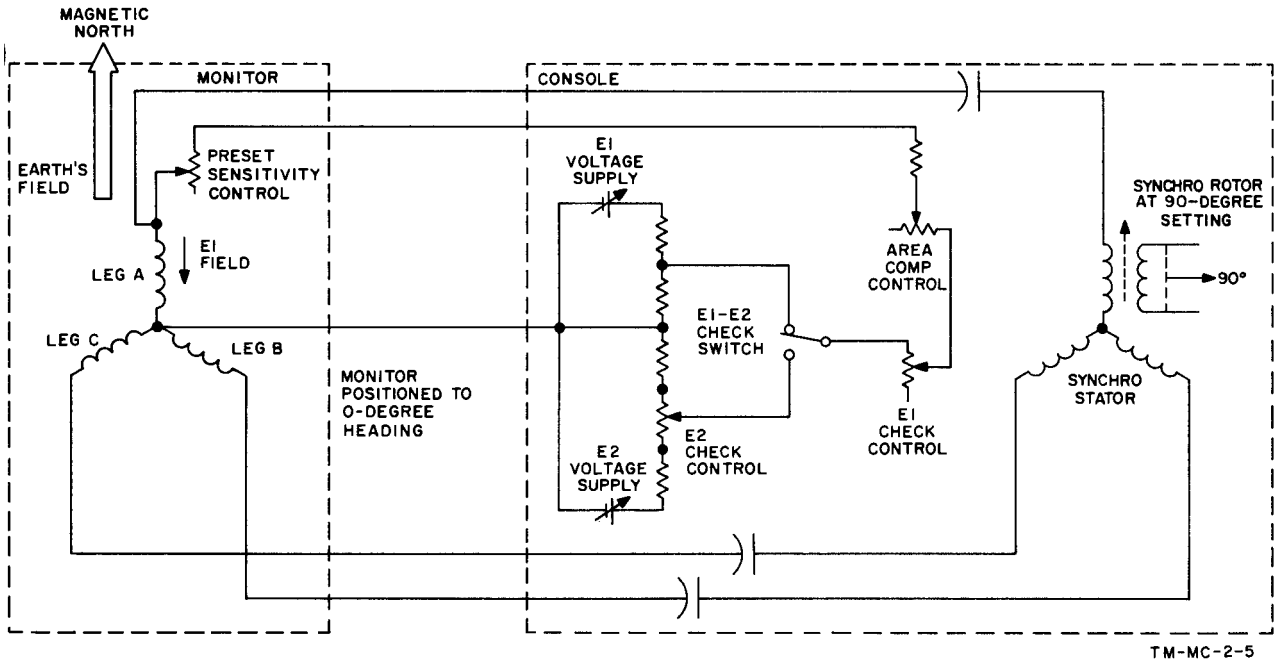

Figure 1-13A. (Applicable to Part No. 2592080-8.) Circuit Used to Measure Strength of Earth's Field

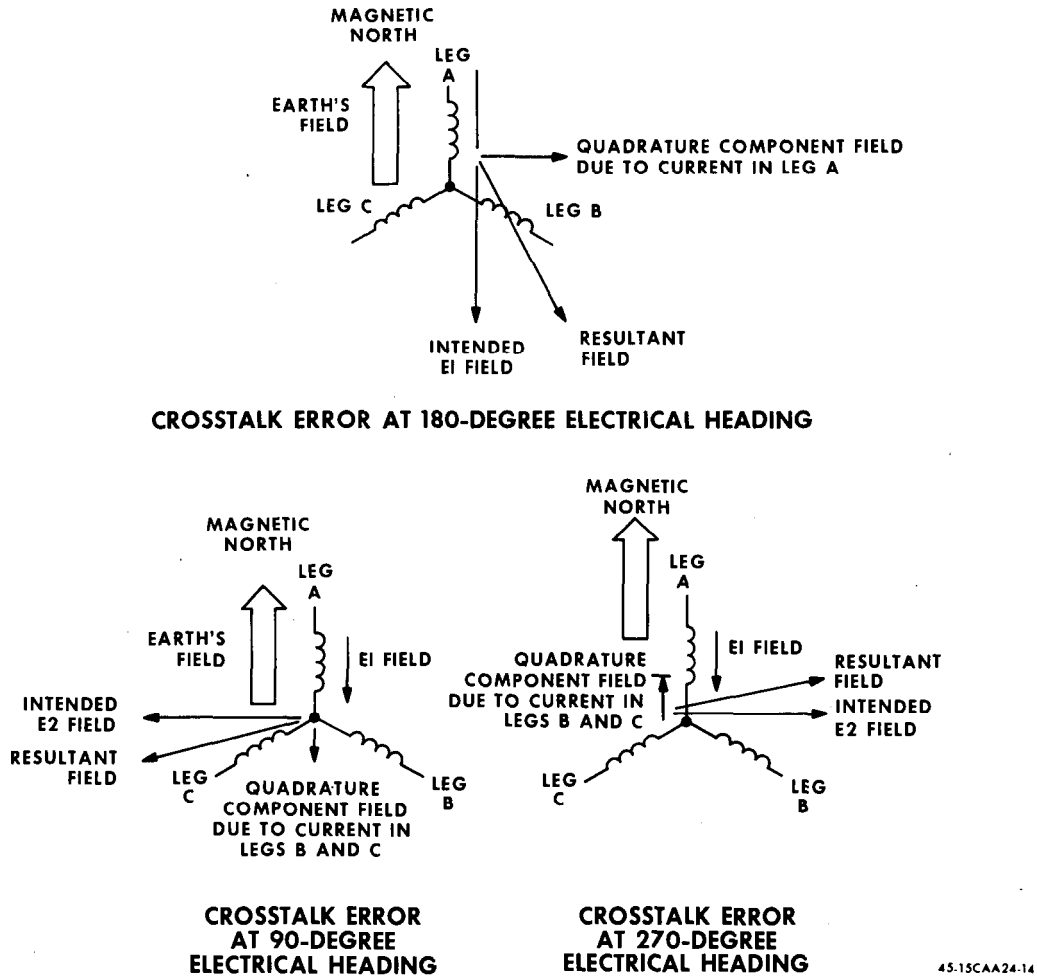

Figure 1-14. Crosstalk Error Vector Diagrams

1-39. GEARCASE -MOTOR, 1A3 OR 1A4. The motor-tachometer generator 1A3MG1 of gearcase-motor is controlled by output of regulator amplifier. This output, which is phase dependent, causes motor-tachometer generator to rotate in a direction to correct for fluctuations in input line or load voltage. Motor-tachometer generator is geared to wiper arm of precision variable resistor 1A3R1 to vary resistance in regulator supply circuit for a constant d-c voltage level applied to heading (HEADING SELECTOR), crosstalk (Δ180, Δ270), and misalignment (MISAL) correction circuits.

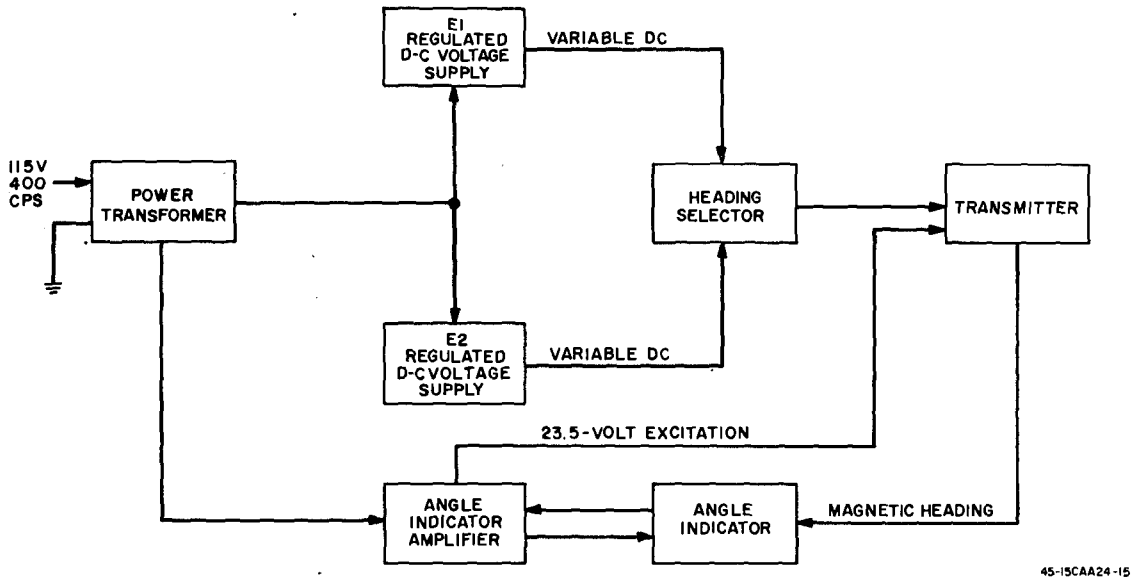

Figure 1-15. Block Diagram Showing Operation in Calibrate Mode

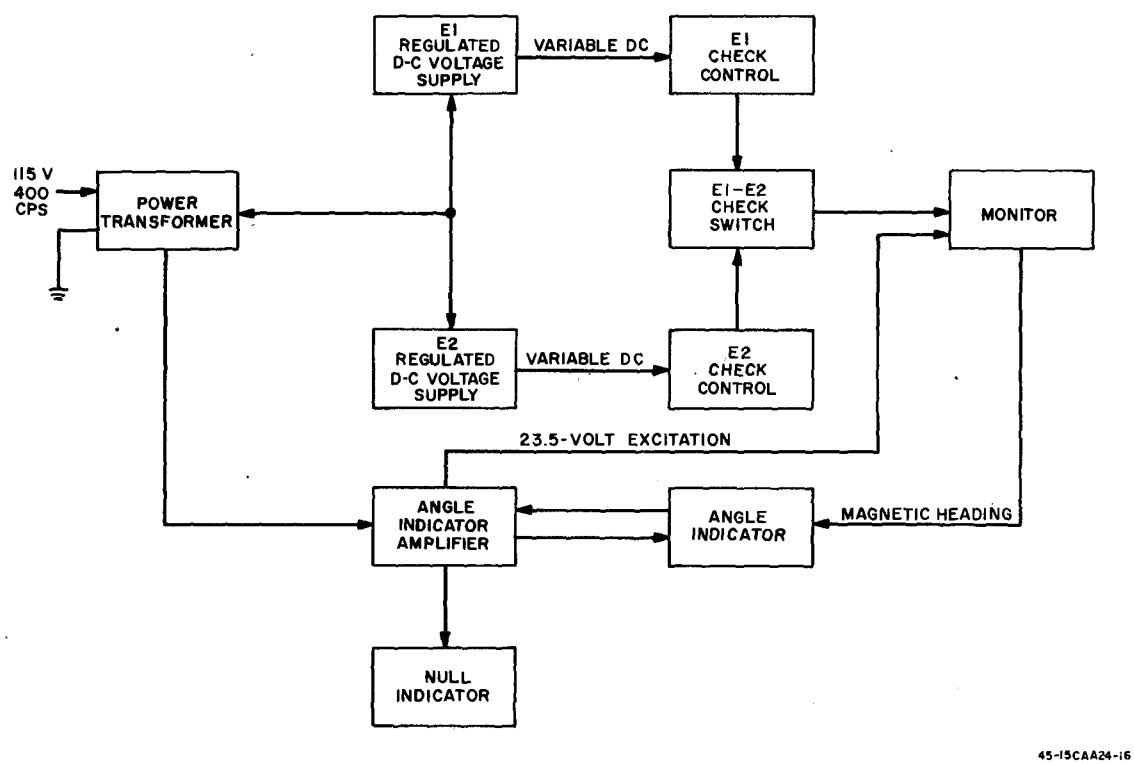

Figure 1-16. Block Diagram Showing Operation in Monitor Mode
For Part No. 2592080-2, -4, and -5

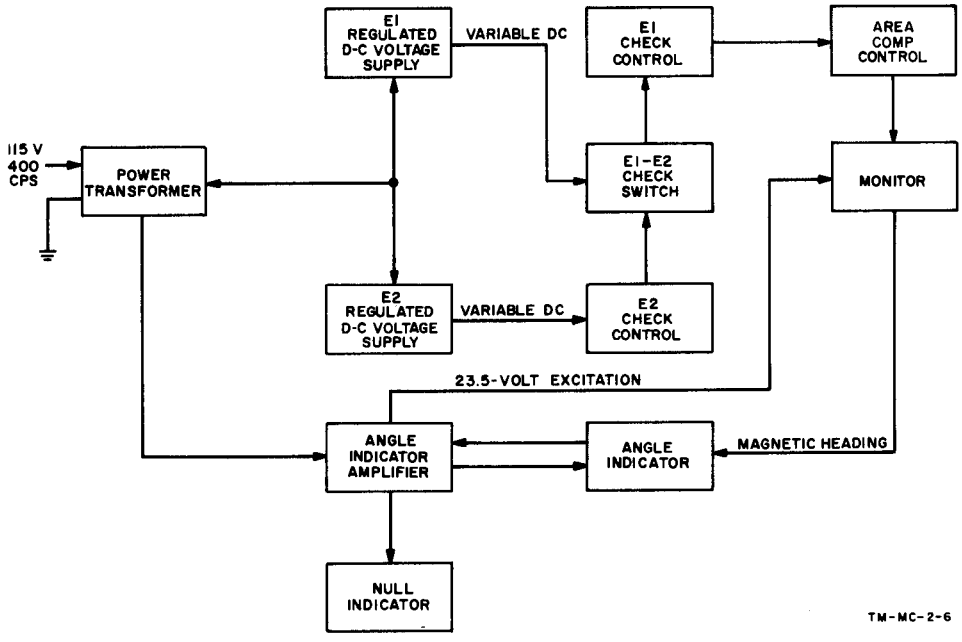

Figure 1-16A. Block Diagram Showing Operation in Monitor Mode
for Part No. 2592080-8

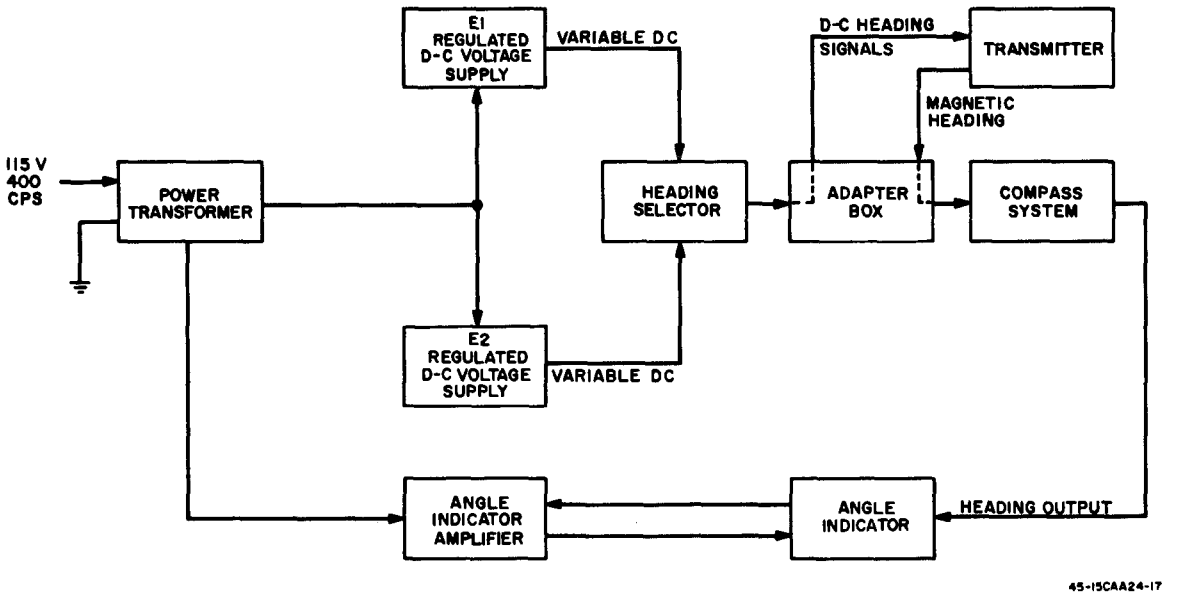

Figure 1-17. Block Diagram Showing Operation in Compass Mode

1-40. ANGLE INDICATOR AMPLIFIER 1A7. (See figure 6-2, sheet 3.) Angle indicator amplifier receives the heading signal and applies it to drive the readout or NULL INDICATOR to a null. When READOUT SELECT switch is in FV position, heading signal is applied to input of a high impedance amplifier consisting of transistors 1A7Q1 and 1A7Q2 and associated parts. The 800-cycle input signal is then demodulated and phased with an 800-cycle reference signal from power supply in transformer 1A7T2. D-c output signal may be switched to NULL INDICATOR from demodulator comprising 1A7CR3A through 1A7CR3D, or modulated to a 400-cycle signal in modulator stage, 1A7CR4A through 1A7CR4D, which is applied to servo amplifier composed of transistors 1A7Q3 and Q4 and associated parts. Power output stage transistors 1A7Q5 and 1A7Q6 drive motor-generator in angle indicator assembly. Power supply provides 23.5-volt excitation, 10-volt generator fixed-field excitation, and necessary d-c regulated supply voltages.

1-41. ANGLE INDICATOR ASSEMBLY 1A8. Angle indicator assembly 1A8 is angle and error readout for Monitor and transmitter. When READOUT SELECT switch is in EXT CX, angle counter displays synchro output information from an external compass system. Output of external compass system transmitter is connected to stator of control transformer 1A8B2. Output on rotor of 1A8B2 is connected directly to input of servo amplifier. In this mode of operation, output of modulator is shorted and demodulator functions to indicate a null for an 800-cycle input. When READOUT SELECT switch is in 0 or 90 position, a signal is applied to B2 stator such that it will drive readout of a 0- or 90-degree heading as selected.

1-42. VOLTAGE DIVIDER NETWORK. (See figure 6-2, sheet 1.) Voltage is then applied to a voltage divider network. The voltage divider consists of a series resistance, a shunt resistance, and a resistance in the regulation circuit.

1-43. Series resistance branch of voltage divider network drops applied voltage (108 volts dc) to a voltage proportional to magnetic field strength at compass swinging site. Resistance of this branch consists of R1 through R8 of E 1 coarse voltage switch and a precision variable resistor in motor controller. Wiper of variable resistor is motor driven by a servo circuit such that series resistance keeps output voltage constant for fluctuations of input voltage or load current.

1-44. Shunt resistance branch of voltage divider network provides resistance that makes voltage regulator load appear constant. This resistance consists of R9 through R17 and R28 of E 1 coarse voltage switch and R1 through R20 of E 1 fine voltage switch.

1-45. Resistance in regulation circuit of voltage divider network samples d-c output voltage of power supply that is ultimately used to position variable resistor in gearcase -motor. Resistance of this circuit consists of R18 to R27 of E 1 coarse voltage switch, R21 to R30 of E1 fine voltage switch, E1 vernier voltage control, and R26 of regulator amplifier. Voltage switches set in resistance between E1 positive and E1 negative to control amount of current in this branch such that voltage across this resistor is 1.35 volts. If E1 positive increases or decreases due to line or load fluctuations, voltage across the resistor changes proportionally.

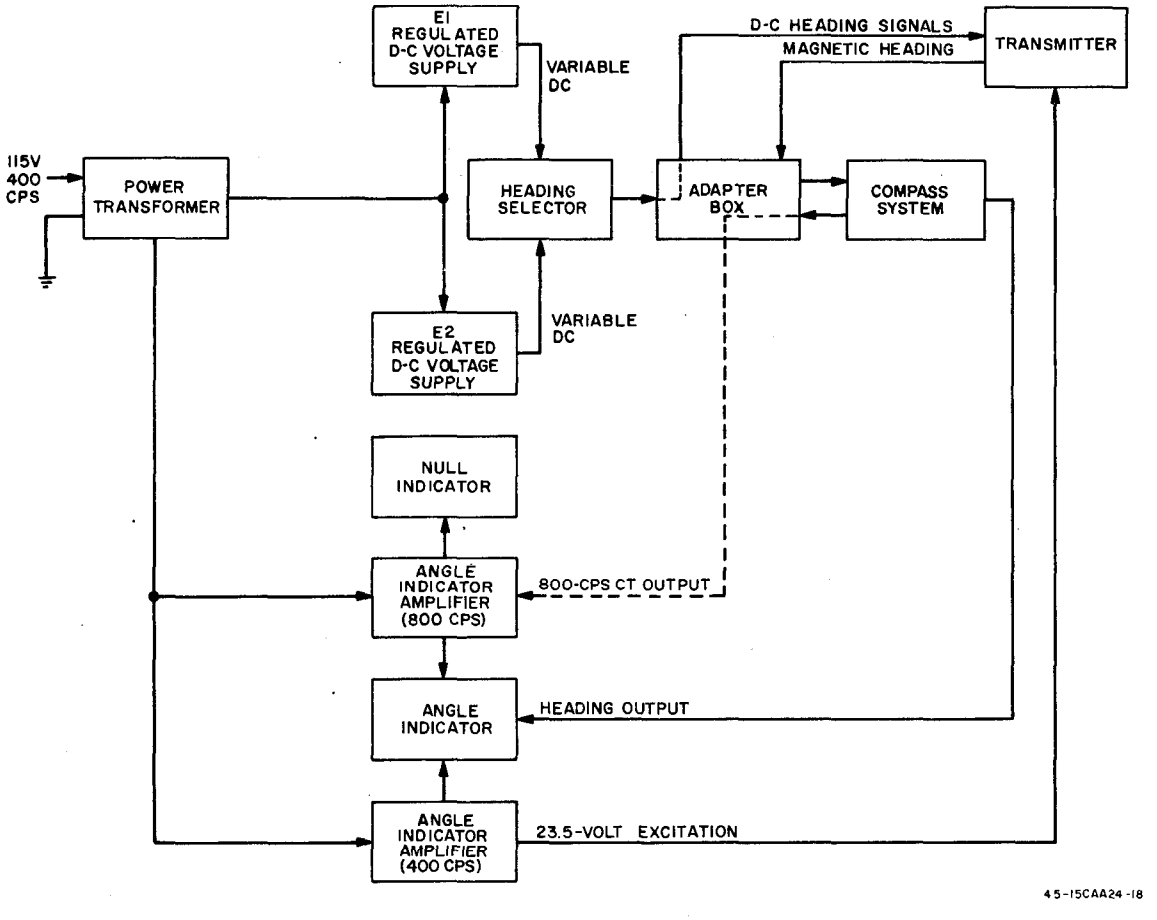

Figure 1-18. Block Diagram Showing Operation in Indicator Mode

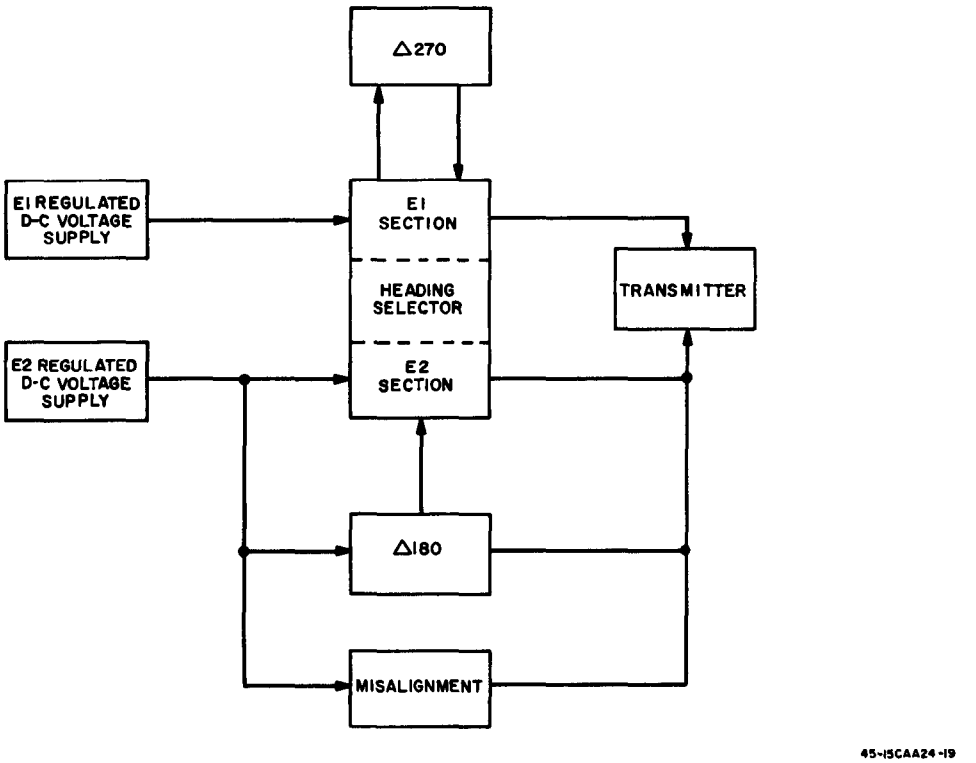

Figure 1-19. Current Paths in Electrical Swing

(Applicable to Part No. 2592080-5.)

1-46.~IELD TESTER. The Field Tester is used to check range and regulation of the E1 and E2 power supplies, determine the index error of the angle indicator synchro control transformer 1A8B1, determine the magnetic bearing of a target, and to demagnetize a transmitter or the valve assembly in the Monitor.

1-46A. FIELD TESTER. (Applicable to Part No. 2592080-8.) The Field Tester is used to check the range and regulation of the E 1 and E2 power supplies, determine the index error of the angle indicator synchro control transformer 1A8B1, determine the magnetic bearing of a target, demagnetize a transmitter, and to verify the calibration of the Monitor and Console.

1-47. To check the E 1 and E2 voltage regulation under load, the E 1 and E2 outputs are fed into the Field Tester through cable assembly W4, and a multimeter, used as a d-c voltmeter, is connected across connectors 5J3 and 5J4. Switch S2 selects either the E1 or E2 voltage, or both, to be connected to the connectors. The range of voltages can be determined by varying the voltage controls to check the range. To check the regulation, switch S2 is put in position E1/E2 which connects E 1 to connector 5J4 and E2 to connector 5J3 and a common ground. The voltmeter then measures the differential voltage. For load regulation, switch S3 supplies an 18K-ohm resistor across E 1 or a 56K-ohm resistor across E2, and the change in differential voltage is measured. For line regulation, the a-c input voltage is varied.

1-48. To determine the index error of the synchro control transformers in the angle indicator, magnetic heading information is generated by the Field Tester. This is accomplished by the valve assembly placed in the nesting shield cans to attenuate the earth's magnetic field to a negligible level. A controlled magnetic field is then generated within the shield can by applying a d-c current to the legs of the valve assembly. The current is from E 1 voltage across resistor R2, and is switched to the various legs of the valve assembly by switch S1. Magnetic headings are obtained every 60 degrees by operation of switch S1 and reversing the polarity of the E 1 voltage. This heading information is then applied to the synchro control transformers and null detection circuits. The index error of the angle indicator is the average of the error at the six headings.

1-49. The magnetic bearing of a target is determined by use of the magnetic azimuth reference detector. The magnetic azimuth reference detector is mounted upright on the Turntable, and the heading information is transmitted to the Console to

determine the errors when the Turntable is rotated to the cardinal headings. The average of these errors, the index error (I_1), is the angular misalignment of the magnetic axis of the magnetic azimuth reference detector valve assembly from magnetic north. A target is then sighted and the bearing (B_1) is read on the Turntable azimuth scale. The magnetic bearing of the target is the bearing (B_1), plus the index error (I_1), plus the misalignment of the telescope to the magnetic axis of the fundamental (M):

$$B_{MAG} = B_1 + I_1 + M$$

The magnetic azimuth reference detector is then inverted on the Turntable and sighted on the same target with the previous bearing (B_1) on the azimuth scale. The errors at the cardinal headings are determined and averaged for the index error (I_2). Since the direction of rotation is reversed when the magnetic azimuth reference detector is inverted, the index error is negative ($-I_1$). The misalignment of the telescope to the magnetic axis of the valve assembly is the same, but in the opposite direction due to the inversion (-M). Therefore, the magnetic bearing of the target with the magnetic azimuth reference detector inverted is the sighted bearing (B_1) plus index error ($-I_2$) plus the telescope misalignment (-M):

$$B_{MAG} = B_1 - I_2 - M$$

Adding the two equations together and dividing by 2, the misalignment of the telescope to the magnetic axis of the valve assembly drops out, and the magnetic bearing of the target is the sighted bearing plus the average of the index errors:

$$B_{MAG} = B_1 + \frac{I_1 - I_2}{2}$$

1-50. To demagnetize a transmitter or valve assembly, the 23.5-volt valve assembly excitation is applied across resistor R3 and variable resistor R1 (DEMAG). The wiper on resistor R1 applies a variable a-c voltage across the three valve assembly legs, which are tied together, and the center tap. By increasing and decreasing this voltage, the residual permanent magnetism in the transmitter or valve assembly is washed out.

1-51. (Applicable to Part No. 2592080-8.) To verify the calibration of the Monitor and Console, the magnetic azimuth reference detector is mounted on the Turntable. The index error is measured by rotating the Turntable to the cardinal headings. The Turntable is adjusted to reduce the index error to 0 ± 1 minute. The values of E 1 CHECK, E2 CHECK, Δ180, and Δ270 for the magnetic azimuth reference detector are set into the Console. With the Console in the MON mode, the E 1 and E 2 voltage supplies are adjusted to null the NULL INDICATOR. Electrical and manual eight heading swings which agree at each point, within ±6 minutes, indicate correct calibration of the Monitor and Console.

1-52. POWER SUPPLY. The Power Supply contains a solid-state static inverter which converts 28 volts dc to 115-volt, 400-cps, single-phase, sine wave power. See block diagram shown in figure 1-20.

1-53. The regulator circuit provides a constant amplitude output voltage from the inverter. Any changes in the d-c input voltage cause a corresponding change in the output voltage of the inverter. Output voltage is fed back to the regulator through a feedback transformer, a positive rectifier, and a regulator adjust variable resistor. This positive d-c voltage controls the regulator circuit. The result is that the d-c output of the regulator remains constant. Therefore, the a-c output of the inverter

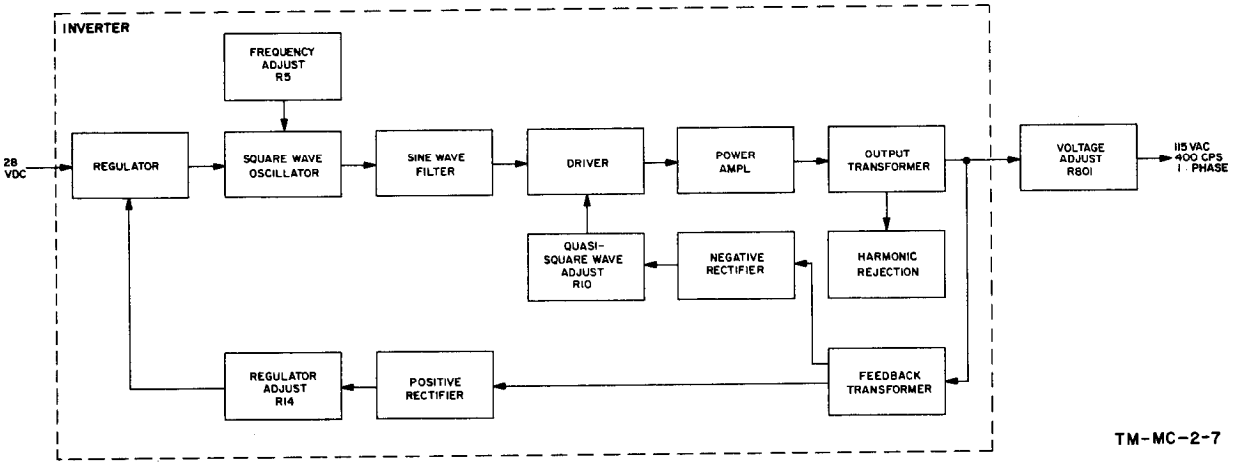

Figure 1-20. Block Diagram of Power Supply

remains constant. Amplitude of the inverter output voltage is controlled by regulator adjust variable resistor R14.

1-54. The square wave oscillator converts the applied d-c voltage to a 400-cycle square wave. Frequency adjust variable resistor R5 controls the oscillator frequency by controlling the amount of d-c voltage applied to the oscillator.

1-55. The sine wave filter and the driver circuits provide a quasi-square wave (figure 1-21) input to the power amplifier. A 400-cycle sine wave, which is derived from the square wave, is applied to the driver. The driver is biased by a negative d-c voltage from the negative rectifier. The driver is cut off during the time the sine wave is passing through 0 volts for a time proportional to the level of negative d-c voltage applied. Length of this cut-off time is determined by the setting of quasi-square wave adjust variable resistor R10. The purpose of this circuitry is to eliminate the 1200-cycle harmonic.

1-56. The power amplifier provides quasi-square wave current amplification. This is stepped up by

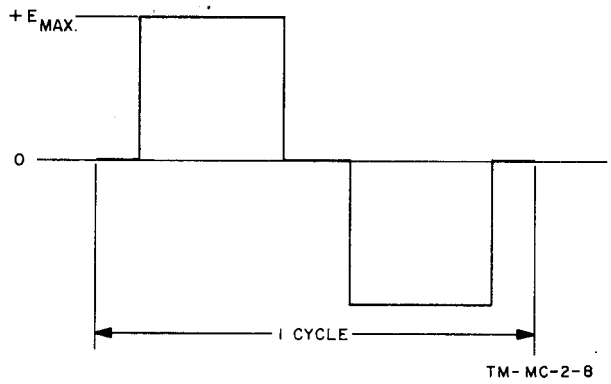

Figure 1-21. Quasi-Square Wave

the output transformer to 115 volts. Any 800- or 2000-cycle harmonics present are rejected by LC turned circuits. The output transformer, feedback transformer, and associated components provide output impedance to properly match the load (Console).

1-57. Voltage adjust variable resistor R801 provides a means to adjust voltage during operation in the field.

SECTION II
SPECIAL SERVICE TOOLS

2 - 1 . Test equipment required for calibration and maintenance of Compass Calibrator is listed in table 2 - 1 . The Field Tester is designed specifically to test the Compass Calibrator to determine its serviceability. All other test instruments are standard and any test instruments with equivalent or improved specification and accuracy may be used.

TABLE 2-1. LIST OF TEST EQUIPMENT

Figure No.	Tool No.	Nomenclature	Application
1-8A	2587311	Field Tester, Sperry Phoenix Company (referred to as Field Tester). (Supplied as part of Compass Calibrator, Part No. 2592080-5) and -8	~~Load, regulation, and 400 cps index tests. Demagnetization.~~ Console and demagnetization Monitor tests.
--		Multimeter, Type ME-26/U, FSN 6625-544-8691.	Continuity and resistance measurements.
--		A-c Vacuum Tube Voltmeter, Hewlett-Packard Company Type 400D, FSN 6625-643-1670 (referred to as a-c vtvm).	A-c voltage measurements.
--		D-c Voltmeter, Type MV-17C, FSN 6625-555-2312 (referred to as d-c vtvm).	D-c voltage measurements.
--		Electrical Power Test Set, Type AN/UPM-93, FSN 6625-581-2007.	Frequency measurements.
--		Synchro Standard, Astrosystems Inc, Model A202S5.	~~800 cps index tests.~~ 400 cps readout accuracy tests.
2-1	T100870	Flux Valve Continuity Checker, Sperry Phoenix Company.	Valve assembly tests.

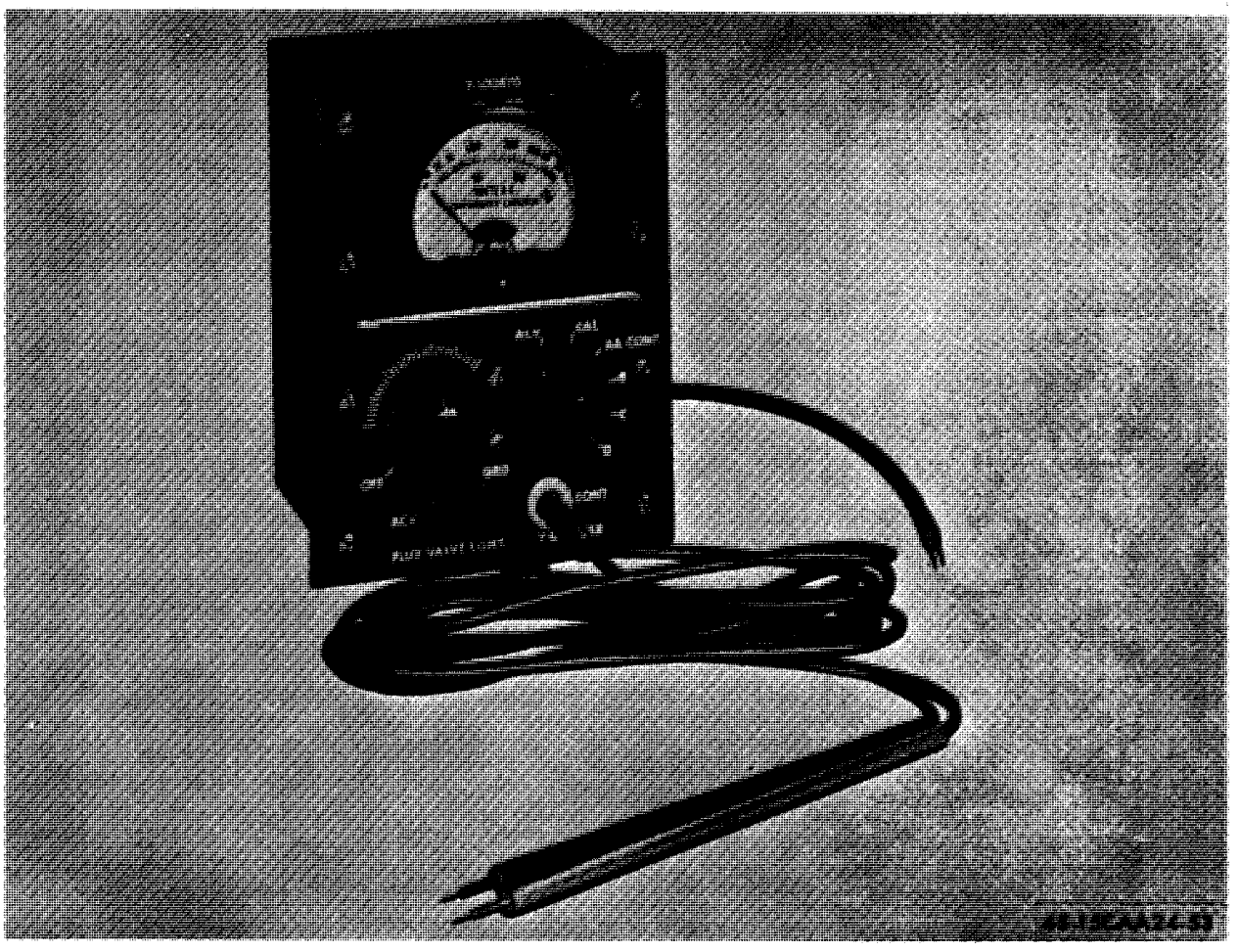

Figure 2-1. Flux Valve Continuity Checker

SECTION III
PREPARATION FOR USE, STORAGE, OR SHIPMENT

3-1. GENERAL.

3-2. This section contains instructions for preparation for use, storage, or shipment of Compass Calibrator.

3-3. PREPARATION FOR USE.

3-4. UNPACKING.

a. Release air pressure in transit case by pressing two-way air pressure release valve located on side of transit case. Remove cover and set aside.

b. Unstrap Tripods (figure 3-1) resting on cable reel partitions and lift out. Unbuckle Tripod strap, grasp Tripod mount, and place Tripod on ground. Swing out legs and lock cross braces into place. Release leg adjusting screws, lift up on Tripod mount to extend legs to desired length, and tighten leg adjusting screws. Follow these instructions for setting up both Tripods. On hard surfaces, use Tripod foot pads to prevent slippage. On soft surfaces, use steel tips stored on bottom section of Tripod legs.

c. Remove Monitor and case (figure 3-1) and place nearby. Open case door and remove Monitor from case by pulling out slideboard (Monitor, Part No. 2587133) or by lifting from fitted foam cushion (Monitor, Part No. 2588224). When removing or replacing Monitor or Turntable from slideboard, it is best to loosen upper clamp and grasp upper portion while rotating lower portion.
and 2591799

d. Place Monitor into Tripod mount and fasten firmly with two securing screws so that it will not move during use.

Note

When placing Monitor into Tripod mount, be sure securing screws are turned out so as not to interfere with Monitor mounting base.

e. Lift Alignment Equipment case (figure 3-1) from transit case and place it nearby. To open cover, lift up on two latches and pull lock away from case. Open case, remove plumb bob connector adapter from Alignment Equipment case and place it over connector located on underside of Monitor mounting base. Turn plumb bob connector adapter clockwise to lock into place. Remove plumb bob from Alignment Equipment case and unwind string. Attach plumb bob to plumb bob connector adapter by forming a loop with plumb bob string slide lock and hooking over chain extending down from plumb bob connector adapter. String slide lock can be adjusted so that desired length of string can be obtained.

f. Remove telescope sunshade from Alignment Equipment case and attach in place of lens cap. Open eyepiece cover before using Monitor by sliding down lever on eyepiece focus alignment.

CAUTION

When handling Monitor, it should be held by its standard or base.

g. Remove Turntable from transit case and place nearby. Pull out slideboard, grasp Turntable by mounting base, and remove from slideboard by unscrewing unit in a counterclockwise direction (Turntable, Part No. 2587138) or by removing from fitted foam cushion (Turntable, Part No. 2588223). Grasp Turntable by short extension legs and carefully set Turntable base into Tripod head. Follow same procedure used in mounting Monitor. If transmitter to be aligned is top-mounted in aircraft, short extension legs are left on Turntable. For bottom-mounted transmitters, refer to applicable aircraft manual.

h. Before leveling Monitor and Turntable, center instrument in base plate by loosening all four leveling screws and sliding instrument toward center. Tighten four leveling screws until slight pressure is obtained between leveling screw feet and base plate.

i. Remove Console (figure 3-1) from transit case and place on a convenient stand such as Monitor or Turntable case. Neutralize air pressure in Console by turning air pressure release valve. Remove Console lid by turning four locks to open position. Open cover and slide it off hinges. Set cover aside.

j. Remove three cable reels and place them on ground. Grasp exposed cable connector and pull out cable. Connect Monitor cable W3 from Monitor to MON connector 1J3 of Console. Unwind Transmitter cable W2 and connect to TRANS connector 1J2 of Console. When transmitter is mounted on Turntable, connect other end to Turntable. When Transmitter is mounted in an aircraft, connect other end as specified in applicable aircraft manual.

k. Remove power cable W1 from shipping case and connect end W1P2 to power cart and end W 1 P1 to power connector 1J1 of Console.
or J806 of Power Supply

l. Remove adapter box and Field Tester (supplied with Compass Calibrator, Part No. 2592080-5 and -8) from shipping case and set aside.

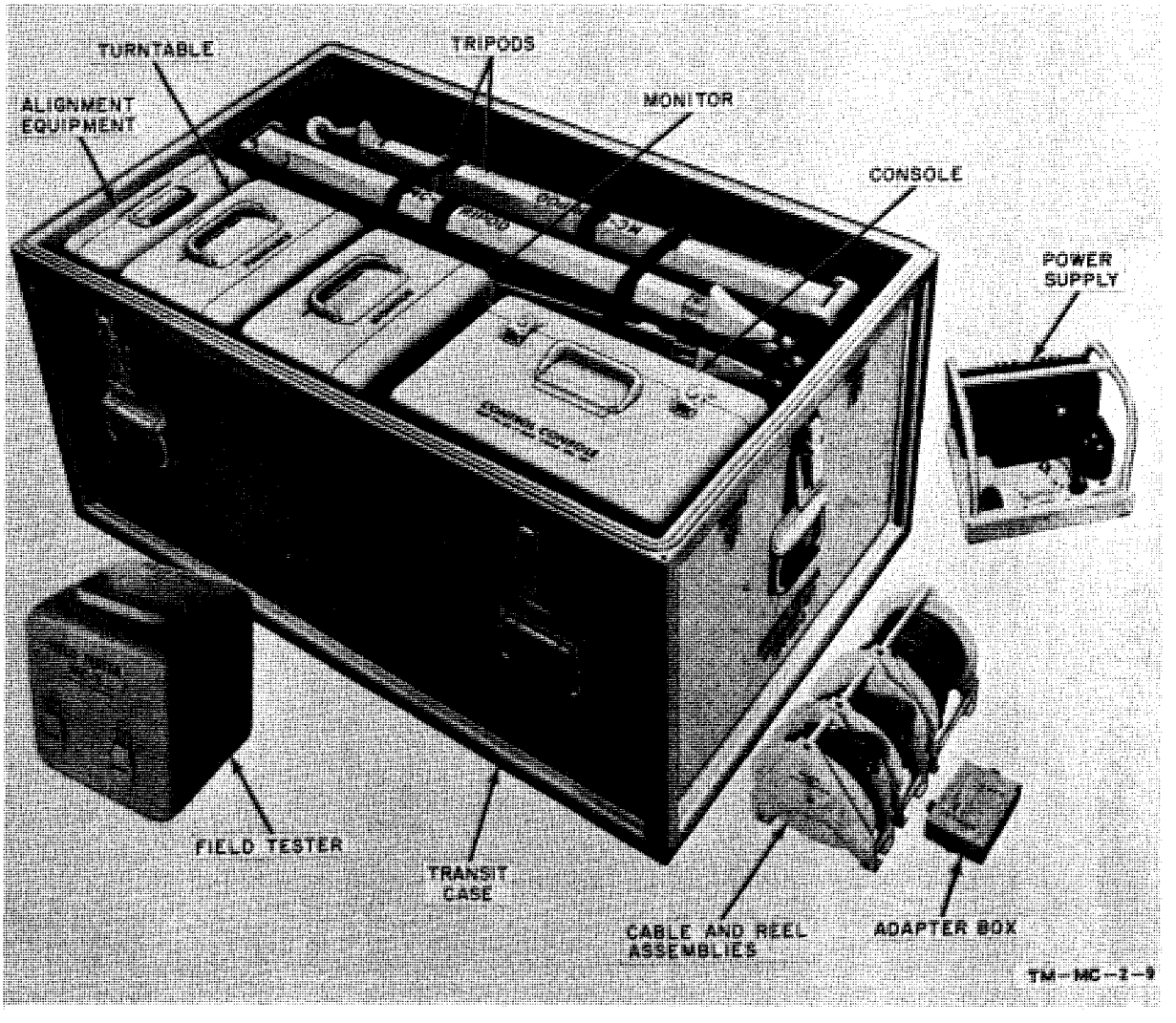

Figure 3-1. Compass Calibrator Transit Case and Components

3-5. SPACE REQUIREMENTS.

3-6. Refer to table 1-2 for space requirements of each component of Compass Calibrator.

3-7. POWER REQUIREMENTS.

(Applicable to Part No. 2592080-2, -4, and -5.)

3-8. Compass Calibrator requires an a-c power source of 115±10 volts, 1 ampere minimum, single phase, 400±5 cps for operation of equipment. Second harmonic of output voltage shall not exceed 0.5 percent. Power source is connected to Console 1J1-K (low) and 1J1-J.

3-8A. (Applicable to Part No. 2592080-8.) Compass Calibrator requires a d-c power source of 27.5±1.5 volts for operation of equipment. Power source shall be capable of supplying a minimum of 5 amperes. Power source is connected to J803 of Power Supply.

3-9. PREPARATION FOR STORAGE.

3-10. There are no special storage requirements to guard against damage from the elements and mishandling. All switches on Console shall be at minimum or OFF position. Use crank to reel cables back onto their respective reels for storage. Transit case provides best storage for Compass Calibrator components.

3-11. PREPARATION FOR SHIPMENT.

3-12. Transit case shown in figure 3-1 is designed to contain all components of Compass Calibrator for shipment. Exterior material and partitions are of an aluminum modular construction finished in aviation yellow enamel.

3-13. PACKAGING.

3-14. Prepare Compass Calibrator for storage, and package according to following instructions using materials listed in table 3-1.

a. Prepare a four-way pallet, 42 1/2 inches long by 27 inches wide by 7 inches high, using eight pieces of lumber 1 inch thick by 6 inches wide by 27 inches long, four pieces of lumber 1 inch thick by 3 1/2 inches wide by 42 1/2 inches long, four pieces of lumber 4 inches thick by 4 inches wide by 8 inches long, and two pieces of lumber 4 inches thick by 4 inches wide by 6 inches long. Use tenpenny cement coated nails for fabricating pallet. (See figure 3-2.)

b. Place single-face corrugated paper board (Federal Specification PPP-P-291, Type II, Class I) around Tripod and strap with strapping tape (Federal Specification PPP-T-97). Place tissue paper (Military Specification MIL-P-4185) and desiccant (Military Specification MIL-D-3464) in trays of transit case. Cover desiccant with tissue paper.

c. Close transit case and bind case to pallet securely with two 3/4-inch wide steel bands (Federal Specification QQ-S-781).

TABLE 3-1. MATERIALS REQUIRED FOR STORAGE AND SHIPMENT PREPARATION

Material	Quantity
Lumber 1 x 6 x 27 inches	8 each*
Lumber 1 x 3 1/2 x 42 1/2 inches	4 each
Lumber 4 x 4 x 8 inches	4 each*
Lumber 4 x 4 x 6 inches	2 each*
Desiccant (activated) in bags, for static dehumidification and packaging (Military Specification MIL-D-3464)	2 each, 8 unit package
Paper board, single face corrugated (Federal Specification PPP- P-291, Type II, Class I)	As required
Paper, tissue (Military Specification MIL- P-4185)	As required
Strapping, flat, steel, 3/4 inch wide (Federal Specification QQ-S-781)	As required
Tape, strapping (Federal Specification PPP-T-97)	As required

*Random widths may be substituted.

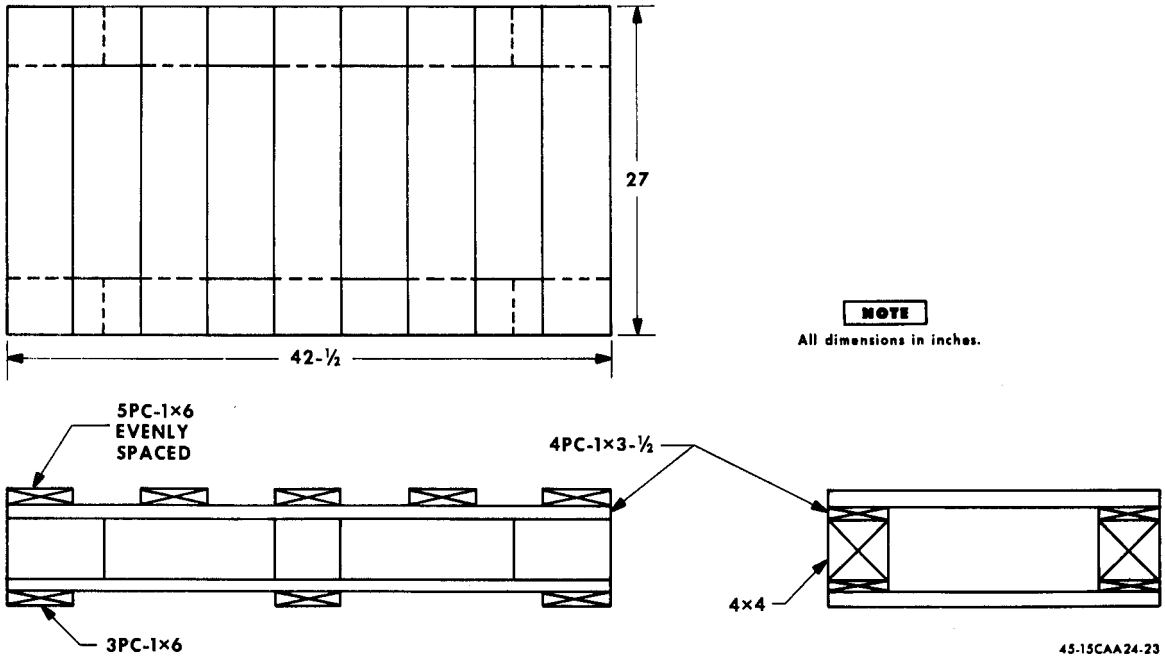

Figure 3-2. Configuration of Pallet

SECTION IV
OPERATION INSTRUCTIONS

4-1. GENERAL.

4-2. This section provides complete instruction procedures for operation of Compass Calibrator. Procedures are given in the most practical and efficient manner to ensure that Compass Calibrator is utilized to its best capabilities.

4-3. A compass swing requires an area that is accessible, is free of nearby traffic, and has sufficient space for an aircraft to be towed-in directly on a north heading. To achieve maximum accuracy, earth's magnetic field in the vicinity of the t rans - mitter should be uniform both in magnitude and direction. It is the purpose of magnetic survey to determine how well a selected swing site meets this latter condition.

4-4. In area magnetic survey, direction and strength of earth's magnetic field are measured at various points in a selected swing site to determine if earth's field is sufficiently uniform to ensure accuracy of the swing. Area magnetic survey consists of the following:

a. Earth's magnetic field vertical gradient check.

b. Earth's magnetic field horizontal gradient check.

c. Monitor location check.

d. Establishment of north-south line.

e. Survey of additional transmitter locations.

4-5. Tolerances prescribed for various checks of magnetic survey are required to ensure a swing accuracy of 0.1 degree.

4-6. An area that has met conditions of magnetic survey may be used to conduct compass swings for a period of one year, before it is necessary to re - check magnetic properties of the area. However, any changes in physical features of the site that might result in a magnetic disturbance (such as construction of buildings or installation of power lines) necessitate an immediate resurvey to determine if uniformity of earth's field has been adversely affected.

4-7. AREA MAGNETIC SURVEY.

4-8. Before surveying the site, ensure that it meets requirements of paragraph 4-3. The site should be sufficiently large to accommodate largest aircraft for which Compass Calibrator will be used. Figure 4-1 shows outline and swing-site position of a typical aircraft with vertical stabilizer-mounted transmitter. Figure 4-2 shows outline and position on a swing site of a typical aircraft with wing-mounted trans - mitter. Dimensions given are only typical and are to be interpreted as examples to permit more comprehensive operation instructions.

4-9. EQUIPMENT REQUIRED. The following equipment is required for the area magnetic survey:

a. MC-2 Console.

b. Monitor and Tripod.

c. (Applicable to Part No. 2592080-2, -4, and -5.) 115-volt a-c, 400-cycle Power Cart, Type NC-12 or equivalent.

cA. (Applicable to Part No. 2592080-8.) 28-volt d-c power source.

d. Cables W1 and W3.

4-10. CONSOLE OPERATING CONTROLS. Operating controls, indicator lights, meters, and fuses appearing on the front panel of the Console are identified in figure 4-3. A brief description of their functions is presented in table 4-1.

4-11. EARTH'S MAGNETIC FIELD VERTICAL GRADIENT CHECK. In the vertical gradient check, direction and strength of earth's magnetic field is measured with Monitor lowered to a minimum height over location of Turntable and compared to direction and strength of field measured with Monitor raised to a maximum height. The uniformity of earth's magnetic field along a vertical plane at location of Turntable is indicated by variations between corresponding readings.

Note

Readings taken with Monitor at a maximum height should be taken within 30 minutes of minimum height readings to lessen possi - bility of a shift occurring in earth's field during interval between readings.

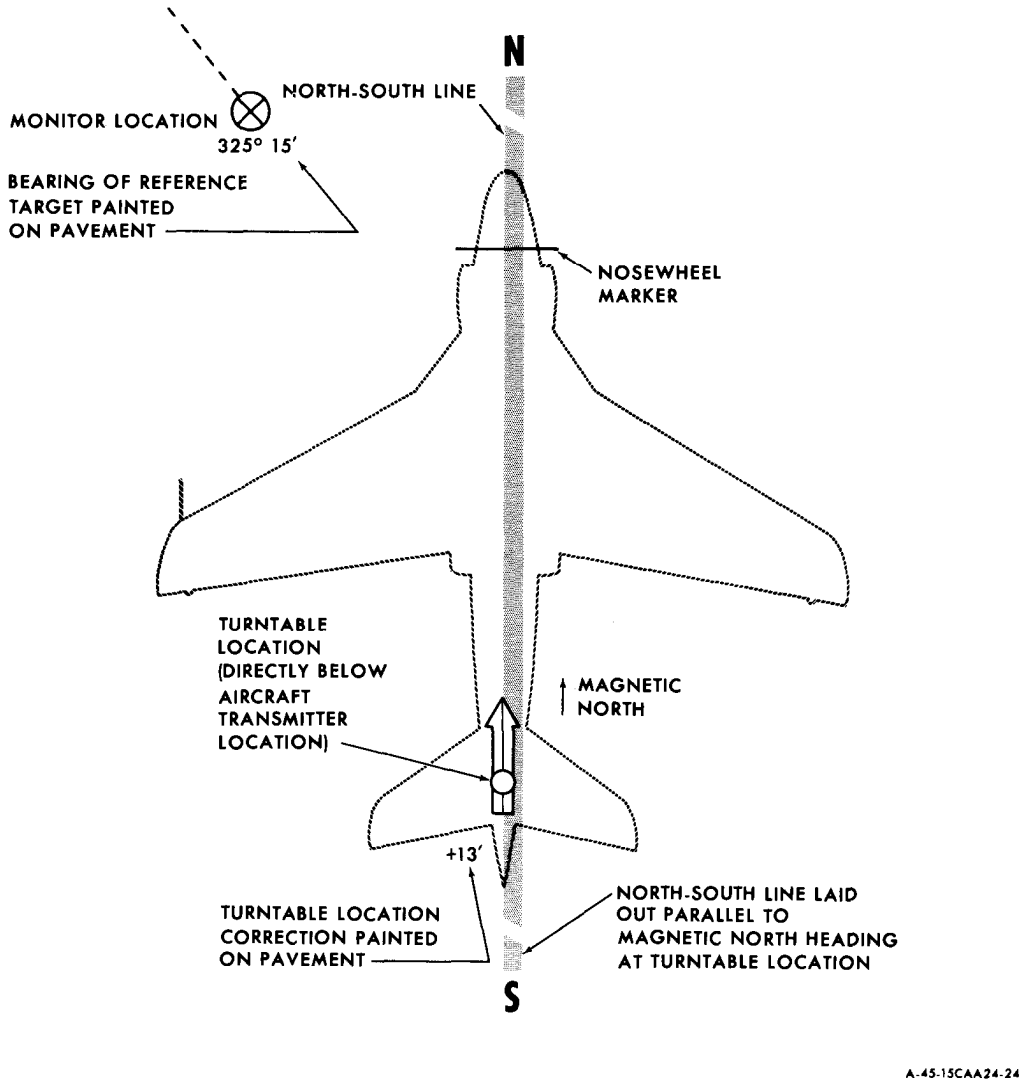

Figure 4-1. Typical Aircraft Position for Stabilizer-Mounted Transmitter

4-12. DETERMINE DIRECTION OF EARTH'S MAGNETIC FIELD WITH MONITOR AT MINIMUM HEIGHT

Note

Paragraphs 4-12 through 4-35 are applicable to Part No. 2592080-2, -4, and -5.

a. Using figure 4-1 or 4-2 as a guide, approximate location of compass system transmitter No. 1.

b. Place small marker (tape) in area of proposed location for transmitter No. 1. Set up Monitor on Tripod at its minimum height over approximate location of this marker. Remove Monitor telescope lens cap. Level Monitor and check bubble level by rotating 180 degrees. If rotation causes level to be off by more than one division, take out half the error with leveling screws and half by adjusting level itself.

Note

Since leveling is of utmost importance in magnetic measurements, use extreme care to ensure that Monitor is properly leveled.

c. Ensure that all controls of Console are initially at OFF or 0 position.

d. Connect cable assembly W1 from Power Cart to power connector 1J1 of Console. Connect cable assembly W3 between Monitor and MON connector 1J3 of Console. For operating convenience, Console should be set up within 10 to 15 feet of Monitor location.

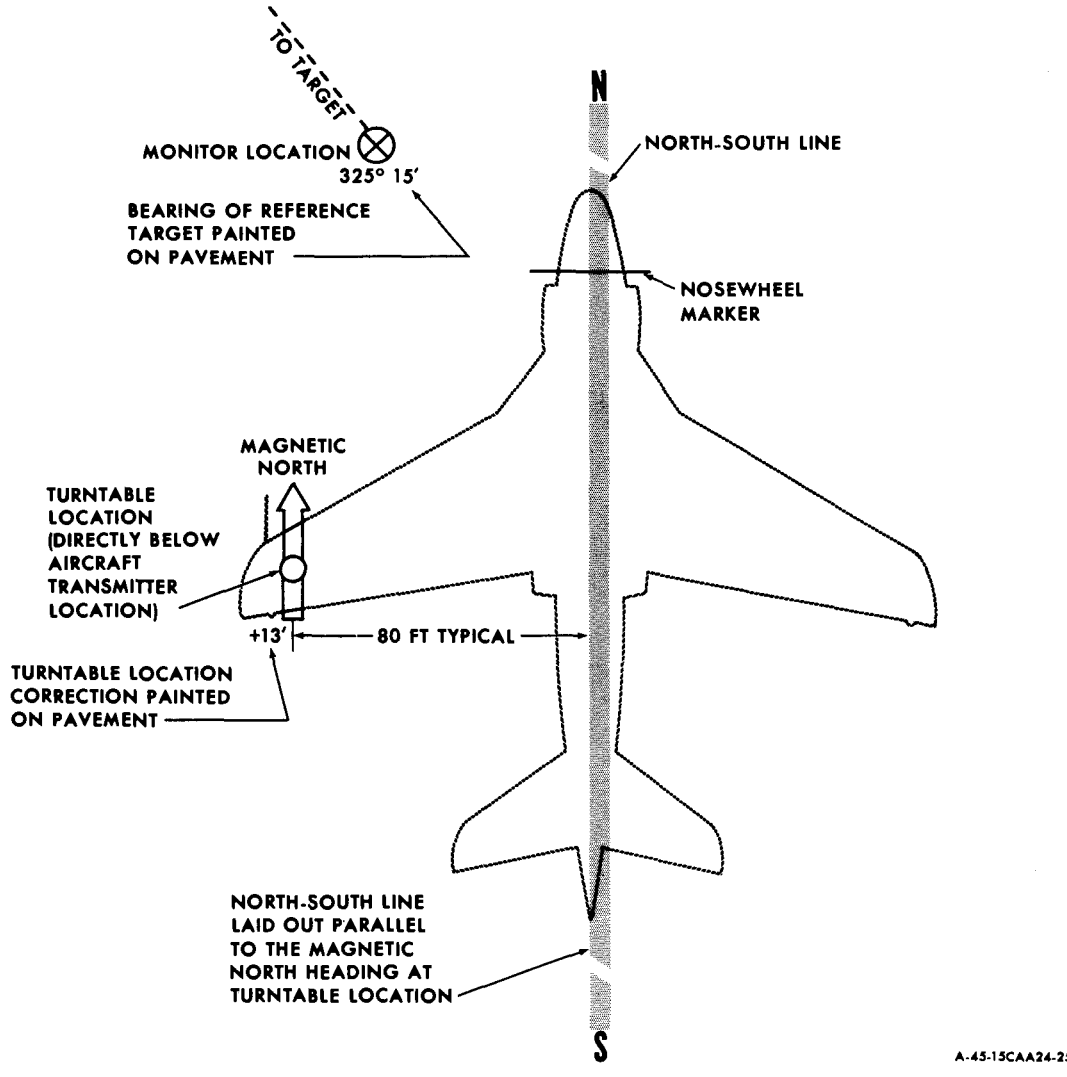

Figure 4-2. Typical Aircraft Position for Wing-Mounted Transmitter

Note

All operating personnel must be at least 10 feet away from Monitor and Turntable when reading console dials and indicators, and heavy power equipment must be at least 80 feet away to prevent magnetic disturbances.

e. Set controls and switches of Console as directed in table 4-2, and start Power Cart.

f. Set Console POWER ON-OFF to POWER ON. Rotate VOLTS ADJUST control to obtain 23.5±0.5 volts on EXC VOLTS meter, and observe that FREQUENCY meter indicates 400±5 cps.

Note

Periodically check FREQUENCY and EXC VOLTS meters to ensure correct operating values.

g. With Monitor set to an arbitrary heading, observe readout. Release azimuth scale and set in exact value showing on readout. Rotate Monitor to zero on vernier azimuth scale. Monitor telescope should now be sighting approximately magnetic north and readout should indicate 0±10 minutes. If not, repeat the procedures in this step.

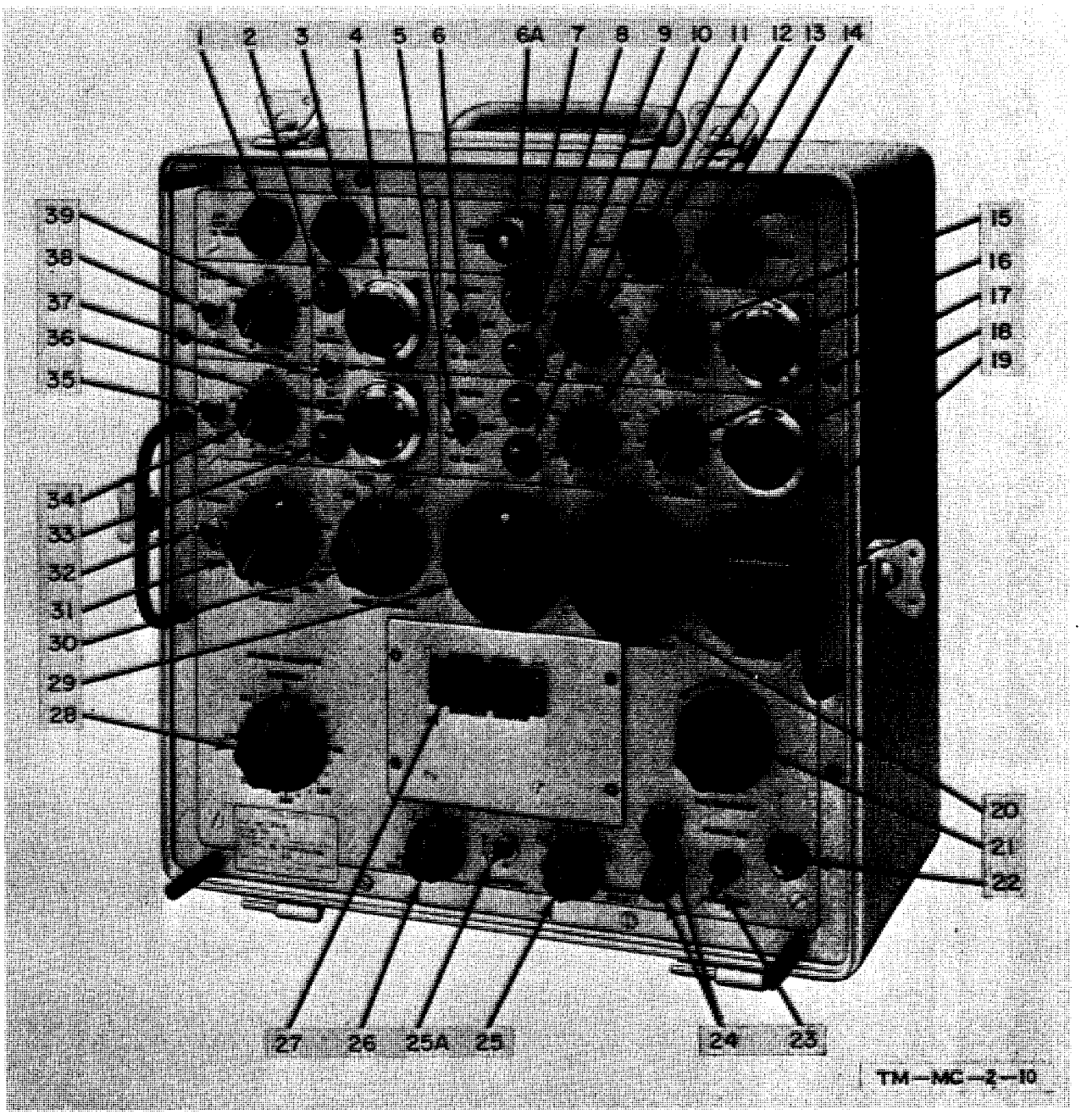

1. 1J4 EXT CX & TEST Connector
2. E1 CHECK Indicator
3. 1J3 MONITOR Connector
4. E1 CHECK Control
5. E2 NORM.-REV. Switch
6. E1 NORM.-REV. Switch

6A. AREA COMP Vernier Control (Used only in Console, Part No. 2591798)

7. E1 NORM. Indicator
8. E1 REV. Indicator
9. E2 NORM. Indicator
10. E2 REV. Indicator
11. E1 VOLTS Switch (5 to 90)
12. 1J2 TRANS Connector
13. E2 VOLTS Switch (5 to 90)
14. 1J1 POWER Connector
15. E1 VOLTS Switch (0 to 10)
16. E1 VOLTS Vernier Control
17. E2 VOLTS Switch (0 to 10)
18. E2 VOLTS Vernier Control
19. FREQUENCY Meter
20. EXC VOLTS Meter
21. VOLTS ADJUST Control
22. POWER ON-OFF Indicator
23. POWER ON-OFF Switch
24. Fuses
25. READOUT SELECT Switch

25A. DAMPING Switch (Used only in Console, Part No. 2588219 and 2591798)

26. FV SELECT Switch
27. HEADING and ERROR Readout
28. HEADING SELECTOR Switch
29. NULL INDICATOR Meter
30. MODE SELECTOR Switch
31. MISAL MINUTES Switch
32. MISAL Polarity Switch
33. E2 CHECK Indicator
34. Δ180 MINUTES Switch
35. Δ180 Polarity Switch
36. E2 CHECK Control
37. E1-E2 CHECK Switch
38. Δ270 Polarity Switch
39. Δ270 MINUTES Switch

Figure 4-3. Console Front Panel Controls and Indicators.

TABLE 4-1. CONSOLE OPERATING CONTROLS

Figure 4-3 Index No.	Nomenclature	Reference Designation	Function
34	Δ180 MINUTES Switch	1AT8	Corrects crosstalk quadrature fields due to current flow in leg A of transmitter.
38	Δ270 Polarity Switch	1S5	Controls polarity of Δ270 correction.
35	Δ180 Polarity Switch	1S4	Controls polarity of Δ180 correction.
39	Δ270 MINUTES Switch	1AT7	Corrects crosstalk quadrature fields due to current flow in legs B and C of transmitter.
33	E2 CHECK Indicator	1DS5	Indicates E1-E2 CHECK switch is in E2 position.
37	E1-E2 CHECK Switch	1S3	Applies either E1 or E2 through resistors to leg A of Monitor.
2	E1 CHECK Indicator	1DS4	Indicates E1-E2 CHECK switch is in E1 position.
4	E1 CHECK Control	1R5	Adjusts resistance in series with E1 and leg A of remote transmitter monitor assembly.
36	E2 CHECK Control	1R6	Adjusts resistance in series with E2 and leg A of the Monitor.
6	E1 NORM.-REV. Switch	1S1	Controls polarity of voltage E1 applied to leg A of transmitter.
5	E2 NORM.-REV. Switch	1S2	Controls polarity of voltage E2 applied to legs B and C of transmitter.
7	E1 NORM. Indicator	1DS2	Indicates E1 switch is in E1 NORM. position.
8	E1 REV. Indicator	1DS3	Indicates E1 switch is in E1 REV. position.
9	E2 NORM. Indicator	1DS6	Indicates E2 switch is in E2 NORM. position.
10	E2 REV. Indicator	1DS7	Indicates E2 switch is in E2 REV. position.
11, 15, 16	10-Volt, 1-Volt, and Vernier E1 Voltage Control Knobs	1AT2, 1AT4 1R3	Adjusts voltage output of regulated d-c supply E1 in accordance with strength of earth's field and sensitivity of leg A of transmitter.
13, 17, 18	10-Volt, 1-Volt, and Vernier E2 Voltage Control Knobs	1AT3, 1AT5 1R4	Adjusts voltage output of regulated d-c supply E2 in accordance with strength of earth's field and sensitivity of legs B and C of transmitter.
6A	AREA COMP Vernier Control	1R7	Adjusts resistance in series with E1 CHECK Control and leg A of Monitor (used only in Console, Part No. 2591798).

TABLE 4-1. CONSOLE OPERATING CONTROLS (cont)

Figure 4-3 Index No.	Nomenclature	Reference Designation	Function
20	EXC VOLTS Meter	1M1	Indicates transmitter excitation voltage.
19	FREQUENCY Meter	1M2	Indicates frequency of transmitter excitation voltage.
22	POWER ON-OFF Indicator	1DS1	Indicates power is being applied to the console.
21	VOLTS ADJUST Control	1T1	Adjusts excitation to 23.5 volts for transmitter or Monitor.
23	POWER ON-OFF Switch	1S7	Applies power to system.
24	Fuses	1F1, 1F2	Protects input circuit from overloads.
29	NULL INDICATOR Meter	1M3	Indicates null between transmitter and synchro.
28	HEADING SELECTOR Switch	1AT1	Sets up resistance combination necessary to rotate magnetic field to proper headings.
30	MODE SELECTOR Switch	1S8	Selects mode of operation of Console.
31	MISAL MINUTES Switch	1AT6	Provides compensation for misalignment of transmitter from earth's field.
32	MISAL Polarity Switch	1S6	Controls polarity of misalignment correction.
26	FV SELECT Switch	1S10	Selects transmitter input for readout.
25	READOUT SELECT Switch	1S9	Selects external or internal signal for readout.
27	HEADING and ERROR Readout		Indicates heading and error of Monitor and transmitter.
25A	DAMPING Switch	1S11	Damps excessive oscillations in readout during compass swing (Used only in Console, Part No. 2588219 and 2591798).

Note

headings are set

Monitor ~~rotation is accomplished~~ by loosening upper clamp and rotating Monitor to obtain desired ~~reading on readout~~. Upper clamp should then be tightened at desired heading and vernier used to fine-adjust for exact alignment of Monitor scales. To set azimuth scale, lower clamp should be loosened and scale rotated to desired heading. Then lower clamp should be tightened and vernier used to fine-adjust.

setting on azimuth scale.

h. Record readout errors at monitor headings of 0, 90, 180, and 270 degrees in table 1 of typical Area Magnetic Survey Data Sheet, NAVAIR Form 13910/1 (figure 4-4). Synchronization will be automatic with READOUT SELECT switch in FV position and error will appear in MINUTES window of ERROR readout.

Note

Readout error is defined as difference between headings of Monitor, Turntable, or HEADING SELECTOR and heading indicated by Console readout when at null. In Console, Part No. 2587177, which has MINUTES drum ERROR readout, error is positive if angle indicator heading is higher than Monitor, Turntable, or HEADING SELECTOR. Error is negative if angle indicator heading is lower. For convenience in measuring negative errors, minute drum has two scales. White scale is the positive scale which, when added to digital reading, gives total angular readout. Red scale gives negative errors directly. For example, 89°35' will show 25' on the red scale or the error is -25'. Caution should be exercised when noting errors around exact headings as digital indicator starts to move. This area is indicated by yellow markings on drum. In Console, Part No. 2588219, which has MINUTES tape ERROR readout, positive errors appear on white portion of MINUTES tape and negative errors on red portion of MINUTES tape.

i. Add four errors (one each at 0, 90, 180, and 270 degrees) algebraically and divide this sum by 4. Record this value as Monitor index error on line 1A of typical Area Magnetic Survey Data Sheet (referred to as survey data sheet).

4-13. DETERMINE STRENGTH OF EARTH'S MAGNETIC FIELD WITH MONITOR AT MINIMUM HEIGHT.

a. Change Monitor to 0-degree heading.

CAUTION

To avoid cable damage, never rotate Monitor and Turntable more than 360 degrees in one direction.

b. Change Console controls and switches as follows:

E1-E2 CHECK to E1 CHECK.
E1 CHECK to 500.
READOUT SELECT to 90.

c. Adjust E1 voltage controls to obtain null on NULL INDICATOR and record value of E1 voltage on line 1B of survey data sheet. Set E1-E2 CHECK switch and POWER ON-OFF switch to OFF.

d. Rotate Monitor to sight a convenient arbitrary target, in any direction, 4 miles or more away. A closer target may be used if space limitations require it, but parallax error must be compensated. One foot of parallax causes an error of about 1 minute if the target is at a distance of 1/2 mile. Table 4-3 gives parallax errors for targets at different distances. Observe and record azimuth scale bearing as TB1 on line 1-1 of survey data sheet. This target will not necessarily be used for compass swing.

4-14. DETERMINE DIRECTION OF EARTH'S MAGNETIC FIELD WITH MONITOR AT MAXIMUM HEIGHT.

a. Raise Monitor to maximum Tripod height and level.

b. Rotate Monitor to sight target TB1 established in paragraph 4-13.d. Set azimuth scale to this target bearing and record this bearing on line 2-1 of survey data sheet.

c. Rotate Monitor to 0-degree heading and change Console controls and switches as follows:

READOUT SELECT to FV.
POWER ON-OFF to POWER ON.
EXC VOLTS to 23.5.

TABLE 4-2. INITIAL CONTROL AND SWITCH SETTINGS

Control or Switch	Initial Position
Δ270 MINUTES Switch*	0
Δ180 MINUTES Switch*	0
MISAL MINUTES Switch*	0
HEADING SELECTOR Switch*	0
MODE SELECTOR Switch*	MON
E1 NORM.-REV. Switch*	E1 NORM.
E2 NORM.-REV. Switch*	OFF
FV SELECT Switch	2
E1-E2 CHECK Control	OFF
READOUT SELECT Switch	FV
DAMPING Switch	OFF

*These controls and switches will remain in same position throughout area magnetic survey procedures.

TABLE 4-3. PARALLAX ERRORS FOR TARGET DISTANCES

Distance to Target (miles)	Parallax Error (minutes)
1/4	13.0
1/2	6.5
3/4	4.3
1	3.3
2	1.6
3	1.1
4	0.8

MAGNETIC COMPASS CALIBRATOR SET TYPE MC-2 AREA MAGNETIC SURVEY DATA LOCATION
NAVAIR FORM 13910/1 (5-66)

See Handbook, operation and service instructions with Illustrated Parts Breakdown for Magnetic Compass Calibrator Set Type MC-2, NAVWEPS 17-15CAA-45, for instructions on completing this form

I. VERTICAL GRADIENT

PART 1 MONITOR SET UP AT MINIMUM TRIPOD HEIGHT

SWITCH AND CONTROL SETTINGS

Direction

Δ180, Δ270, Missal to 0.
Heading Selector to 0.
Mode Selector to Mon.
E1 to E1 Norm.
E2 to Off.
FV Select to 2.
The above settings shall not be changed during the Area Magnetic Survey.

E1-E2 Check to Off.
Readout Select to FV.
Power On-Off to Power On.
Exc Volts to 23.5.

TABLE 1

MONITOR HEADING	READOUT ERROR
0	
90	
180	
270	
ALGEBRAIC SUM	

Monitor Index Error (minimum height)

Algebraic sum _____ 1A

4

Strength

Change: E1-E2 Check to E1 Check.
Readout Select to 90.
E1 Check to 500.

E1 Voltage Setting _____ 1B

Reference Target Bearing TB1 _____ 1-1

PART 2 MONITOR SET UP AT MAXIMUM TRIPOD HEIGHT

SWITCH AND CONTROL SETTINGS

Direction

Change: E1-E2 Check to Off.
Readout Select to FV.
Power On-Off to Power On.
Exc Volts to 23.5.

TABLE 2

MONITOR HEADING	READOUT ERROR
0	
90	
180	
270	
ALGEBRAIC SUM	

Reference Target Bearing TB1 _____ 2-1

Monitor Index Error (maximum height)

Algebraic Sum _____ 2A

4

Strength

Change: E1-E2 Check to E1 Check.
Readout Select to 90.
E1 Volts and Vernier to 1B.

E1 Voltage Setting (from line 1B) _____ 2B

E2 Check Setting _____ 2C

II. HORIZONTAL GRADIENT

PART 3 MONITOR SET UP AT OPERATING HEIGHT (CENTER OF A 5-FOOT RADIUS CIRCLE)

SWITCH AND CONTROL SETTINGS

Direction

Change: E1-E2 Check to Off.
Readout Select to FV.
Power On-Off to Power On.
Exc Volts to 23.5

TABLE 3

MONITOR HEADING	READOUT ERROR
0	
90	
180	
270	
ALGEBRAIC SUM	

Reference Target Bearing TB1 (from line 2-1) _____ 3-1

Monitor Index Error (operating height)

Algebraic Sum _____ 3A

4

Strength

Change: E1-E2 Check to E1 Check.
Readout Select to 90.
E1 Check Control to 500.

E1 Voltage Setting _____ 3B

PART 4 MONITOR SET UP AT FIRST POINT ON PERIMETER OF THE CIRCLE

SWITCH AND CONTROL SETTINGS

Direction

Change: E1-E2 Check to Off.
Readout Select to FV.
Power On-Off to Power On.
Exc Volts to 23.5.

TABLE 4

MONITOR HEADING	READOUT ERROR
0	
90	
180	
270	
ALGEBRAIC SUM	

Reference Target Bearing TB1 (from line 3-1) _____ 4-1

Monitor Index Error (1st point) _____ 4A

Strength

Change: E1-E2 Check to E1 Check.
Readout Select to 90.

E1 Voltage Setting (from line 3B) _____ 4B

E1 Check Setting _____ 4C

A-35806

Figure 4-4. Typical Area Magnetic Survey Data Sheet (Sheet 1)

SWITCH AND CONTROL SETTINGS	PART 5 MONITOR SET UP AT SECOND POINT ON PERIMETER OF THE CIRCLE		
Direction Change: E1-E2 Check to Off. Readout Select to FV. Power On-Off to Power On. Exc Volts to 23.5.	TABLE 5 MONITOR HEADING / READOUT ERROR 0 90 180 270 ALGEBRAIC SUM	Reference Target Bearing TB1 (from line 4-1)	5-1
		Monitor Index Error (2nd point)	5A
Strength Change: E1-E2 Check to E1 Check Readout Select to 90.	E1 Voltage Setting (from line 4B)		5B
	E1 Check Setting		5C

SWITCH AND CONTROL SETTINGS	PART 6 MONITOR SET UP AT THIRD POINT ON PERIMETER OF THE CIRCLE		
Direction Change: E1-E2 Check to Off. Readout Select to FV. Power On-Off to Power On. Exc Volts to 23.5.	TABLE 6 MONITOR HEADING / READOUT ERROR 0 90 180 270 ALGEBRAIC SUM	Reference Target Bearing TB1 (from line 5-1)	6-1
		Monitor Index Error (3rd point)	6A
Strength Change: E1-E2 Check to E1 Check. Readout Select to 90.	E1 Voltage Setting (from line 5B)		6B
	E1 Check Setting		6C

SWITCH AND CONTROL SETTINGS	PART 7 MONITOR SET UP AT FOURTH POINT ON PERIMETER OF THE CIRCLE		
Direction Change: E1-E2 Check to Off. Readout Select to FV. Power On-Off to Power On. Exc Volts to 23.5.	TABLE 7 MONITOR HEADING / READOUT ERROR 0 90 180 270 ALGEBRAIC SUM	Reference Target Bearing TB1 (from line 6-1)	7-1
		Monitor Index Error	7A
Strength Change: E1-E2 Check to E1 Check. Readout Select to 90.	E1 Voltage Setting (from line 6B)		7B
	E1 Check Setting		7C

III. AREA LOCATION CHECKS

SWITCH AND CONTROL SETTINGS	PART 8 MONITOR LOCATION CHECK		
Direction Change: E1-E2 Check to Off. Readout Select to FV. Power On-Off to Power On. Exc Volts to 23.5.	TABLE 8 MONITOR HEADING / READOUT ERROR 0 90 180 270 ALGEBRAIC SUM	Corrected TB1 Target Bearing (TB1 + 3A)	8-1
		Bearing of Monitor Location from Turntable Location	8-2
		Bearing of TB1 from Monitor Location	8-3
		Compass Swing Target Bearing	8-4
		Monitor Index Error	8A
Strength Change: E1-E2 Check to E1 Check. E1 Check Control to 500. Readout Select to 90.	E1 Voltage Setting		8B

SWITCH AND CONTROL SETTINGS	PART 9 TURNTABLE LOCATION CHECK AND CORRECTION		
Direction Change: E1-E2 Check to Off. Readout Select to FV. Power On-Off to Power On. Exc Volts to 23.5.	TABLE 9 MONITOR HEADING / READOUT ERROR 0 90 180 270 ALGEBRAIC SUM	Correct TB1 Target Bearing (from line 8-1)	9-1
		Monitor Index Error	9A
Strength Change: E1-E2 Check to E1 Check. Readout Select to 90.	E1 Voltage Setting (from line 8B)		9B
	E1 Check Setting		9C
	Turntable Location Correction		9-2

NAVAIR FORM 13910/1 (5-66) (BACK)

A-35806

Figure 4-4. Typical Area Magnetic Survey Data Sheet (Sheet 2)

d. Record readout errors at Monitor headings of 0, 90, 180, and 270 degrees, in table 2 of survey data sheet.

e. Compute Monitor index error as in paragraph 4-12.i and record resultant value on line 2a of survey data sheet.

f. Spread of index errors between maximum and minimum Monitor heights shall not exceed 6 minutes. If greater, this area is unsuitable.

4-15. DETERMINE STRENGTH OF EARTH'S MAGNETIC FIELD WITH MONITOR AT MAXIMUM HEIGHT.

a. Rotate Monitor to 0-degree heading and change controls and switches of Console as follows:

E1-E2 CHECK to E1 CHECK.
READOUT SELECT to 90.
E 1 VOLTS and vernier to value 1B recorded in paragraph 4-13.c.

b. Record E1 voltage setting on line 2B. Adjust E 1 CHECK to null NULL INDICATOR. Record E1 CHECK setting on line 2C of survey data sheet. The E1 CHECK value shall be 500±10. If E1 CHECK indication is greater than 510 or less than 490 divisions, this location is unsuitable.

c. Set E1-E2 CHECK and POWER ON-OFF to OFF.

4-16. EARTH'S MAGNETIC FIELD HORIZONTAL GRADIENT CHECK. Purpose of horizontal magnetic field gradient check is to determine uniformity of earth's magnetic field over a circle of 5-foot radius with its center at Turntable location. This check will ensure that there are no unknown magnetic disturbances in horizontal plane that might affect indications of Compass Calibrator during compass swing.

4-17. DETERMINE DIRECTION OF EARTH'S MAGNETIC FIELD WITH MONITOR AT OPERATING HEIGHT.

a. Set up and level Monitor over Turntable location (center point of a circle with 5-foot radius) at a convenient operating height, and rotate Monitor to sight target TB1 of step 4-13.d. Record target bearing on line 3-1. Set Monitor azimuth scale to bearing of target TB1 recorded in step 4-13.d.

b. Rotate Monitor to 0-degree heading and change controls and switches of Console as follows:

READOUT SELECT to FV.
POWER ON-OFF to POWER ON.
EXC VOLTS to 23.5.

c. Record readout errors at Monitor headings of 0, 90, 180, and 270 degrees, in table 3 of survey data sheet.

d. Compute Monitor index error as in paragraph 4-12.i. and record this value on line 3A of survey data sheet.

4-18. DETERMINE STRENGTH OF EARTH'S MAGNETIC FIELD WITH MONITOR AT OPERATING HEIGHT.

a. Rotate Monitor to 0-degree heading and change controls and switches of Console as follows:

E1-E2 CHECK to E1 CHECK.
E 1 CHECK to 500.
READOUT SELECT to 90.

b. Adjust E1 VOLTS and vernier to obtain null on NULL INDICATOR.

c. Record value of E1 voltage on line 3B of survey data sheet. Set E1 -E2 CHECK and POWER ON-OFF to OFF.

4-19. CHECK DIRECTION OF EARTH'S MAGNETIC FIELD AT A POINT ON PERIMETER OF CIRCLE. This check and remaining horizontal gradient checks are conducted at other points on perimeter of a circle with a radius of 5 feet, having as its center the point at which Monitor was set up at operating height over Turntable location.

a. Locate four points on the perimeter of a circle with 5-foot radius, using transmitter No. 1 location as center of circle. Mark two points in line with the target, one 5 feet toward the target and one 5 feet away from the the target. Mark the other two points 5 feet to the left and to the right of the line of sight of the target. These four points should now be approximately 90 degrees apart on the perimeter of the circle. When the survey is performed on the two points off the line of sight of the target, the parallax error must be compensated. Subtract the parallax error in table 4-3 from the index error when the point 5 feet to the left is surveyed; add the parallax error to the index error when the point 5 feet to the right is surveyed. if the target is less than 4 miles away.

b. Set up and level Monitor at any of these points on perimeter of circle.

c. Record reference target bearing TB1 on line 4-1 of survey data sheet. Rotate Monitor to sight on TB1. Set Monitor azimuth scale to bearing of target TB1 recorded in step 4-13.d.

d. Rotate Monitor to 0-degree heading and change controls and switches of Console as follows:

READOUT SELECT to FV.
POWER ON-OFF to POWER ON.
EXC VOLTS to 23.5.

e. Record readout errors at Monitor headings of 0, 90, 180, and 270 degrees in table 4 of survey data sheet.

f. Compute Monitor index error and record this value on line 4A of survey data sheet.

g. Difference between Monitor index error at this location and at center location shall be 6 minutes or less. If greater, this location is unsuitable.

4-20. CHECK STRENGTH OF EARTH'S MAGNETIC FIELD AT A POINT ON PERIMETER OF THIS CIRCLE.

a. Rotate Monitor to 0-degree heading and change controls and switches of Console as follows:

E1-E2 CHECK to E1 CHECK.
READOUT SELECT to 90.
E1 VOLTS and vernier to value 3B recorded in paragraph 4-18.c.

b. Record E 1 voltage setting on line 4B. Adjust E 1 CHECK to null NULL INDICATOR. Record E1 CHECK setting on line 4C of survey data sheet. E1 CHECK shall indicate 500±10. If E1 CHECK indication is greater than 510 or less than 490 divisions, the location is unsuitable.

c. Set E1-E2 CHECK and POWER ON-OFF to OFF.

4-21. CHECK DIRECTION OF EARTH'S MAGNETIC FIELD AT ADDITIONAL POINTS ON PERIMETER OF THIS CIRCLE.

a. Set up Monitor at another point on perimeter of this circle and conduct steps a through d of paragraph 4-19 at this point and at each of two remaining points on perimeter of this circle. Record the errors at each point on survey data sheet in spaces provided. Compute Monitor index error at each point and record on survey data sheet in spaces provided.

b. Same 6-minute error spread tolerance applies when comparing errors at these additional locations to error of paragraph 4-19.f (entry on line 4A).

4-22. CHECK STRENGTH OF EARTH'S MAGNETIC FIELD AT ADDITIONAL POINTS ON PERIMETER OF THIS CIRCLE.

a. Set up Monitor and conduct step a of paragraph 4-20 at each of remaining points on perimeter of this circle. Record data on survey data sheet in spaces provided.

b. E1 CHECK shall show 500±10 at each point. If E 1 CHECK indication is greater than 510 or less than 490 divisions, this location is unsuitable.

c. Set E1-E2 CHECK and POWER ON-OFF to OFF. If horizontal earth's magnetic field gradient survey has met all specifications recommended, check shall be considered satisfactory, and Monitor location check may now be conducted.

4-23. SELECTING A MONITOR LOCATION. This procedure selects a separate Monitor location different from Turntable location, to ensure that presense of aircraft will not affect reading of Monitor when aircraft is pulled onto north-south line with transmitter access cover directly over Turntable location. Several prospective locations may be sighted so that if some are not satisfactory others may be checked out. After a site has been selected, earth's magnetic field direction and strength are checked to determine if these values are within prescribed limits at this location. If site is satisfactory, it is permanently marked and a Monitor reference target is selected for use during compass swing.

a. Disconnect monitor cable (W3) at Monitor. Connect plumb bob to Monitor in place of cable connector, using special plumb bob adapter furnished.

b. Set up Monitor over Turntable location and level Monitor. Accurately mark point where plumb bob comes to rest. This point will be permanently marked later.

c. Rotate Monitor to sight on selected TB1 of step 4-13.d. Set Monitor azimuth scale to value of target bearing TB1 obtained in paragraph 4-13.d. plus Monitor index error (3A) of paragraph 4-17.d. This is Corrected TB 1 Target Bearing. Record this value on line 8-1 of survey data sheet.

d. Place strip of masking tape on pavement near proposed Monitor location and mark point on tape with pencil. While holding pencil over this point, rotate Monitor to sight pencil. Record bearing of this point from Turntable location on line 8-2 of survey data sheet.

Note

Proposed Monitor location should be approximately 75 to 100 feet away and far enough from tentative position of north-south line to prevent aircraft from having any magnetic effect on Monitor readings.

4-24. SIGHT TARGET FROM SELECTED MONITOR LOCATION.

a. With plumb bob, accurately set up the Monitor over selected Monitor location and level Monitor.

b. Rotate Monitor to sight on a permanent mark at Turntable location. Pencil may be used as a sighting target. Set Monitor azimuth scale to bearing recorded in paragraph 4-23.d ±180 degrees. If bearing of 4-23.d was less than 180 degrees, add 180 degrees; if bearing was greater than 180 degrees, subtract 180 degrees.

c. Rotate Monitor to sight on target TB1 used at Turntable location. Tighten upper motion. Record bearing of TB1 from Monitor location on line 8-3 of survey data sheet.

d. Rotate Monitor to sight a convenient arbitrary target at a distance of 1/2 mile or more. Target may be in any direction but should preferably be a distinctive target such as a water tower light.

e. Record target bearing (Monitor azimuth scale reading) on line 8-4 of survey data sheet and permanently mark target bearing at Monitor location. See figures 4-1 and 4-2. This target will be used for actual compass swing.

Note

Other targets may be established in case of inclement weather or if line of sight to target is blocked.

f. Remove plumb bob and adapter and reconnect Monitor cable W3 to Monitor.

4-25. CHECK DIRECTION OF EARTH'S MAGNETIC FIELD AT SELECTED MONITOR LOCATION.

a. With Monitor set up at selected Monitor location, check leveling and sight target TB1 (paragraph 4-24.c). Readjust Monitor azimuth scale to read proper heading, if necessary.

b. Rotate Monitor to 0-degree heading and change controls and switches of Console as follows:

E1-E2 CHECK to OFF.
READOUT SELECT to FV.
POWER ON-OFF to POWER ON.
EXC VOLTS to 23.5.

4-26. CHECK STRENGTH OF EARTH'S MAGNETIC FIELD AT SELECTED MONITOR LOCATION.

a. Rotate Monitor to 0-degree heading and change controls and switches of Console as follows:

E1-E2 CHECK to E1 CHECK.
E1 CHECK to 500.
READOUT SELECT to 90.

c. Adjust E1 VOLTS and vernier until a null is obtained on NULL INDICATOR and record voltage reading on line 8B of survey data sheet.

d. Set E1-E2 CHECK and POWER ON-OFF to OFF.

4-27. CHECK DIRECTION OF EARTH'S MAGNETIC FIELD AT TURNTABLE LOCATION.

a. Set up Monitor at Turntable location and level. Rotate Monitor to sight on target TB1. Set corrected TB1 target bearing from line 8-1 of survey data sheet on Monitor azimuth scale. Record this value on line 9-1 of survey data sheet.

b. Rotate Monitor to 0-degree heading and change controls and switches of Console as follows:

READOUT SELECT to FV.
POWER ON-OFF to POWER ON.
EXC VOLTS to 23.5.

c. Record readout errors at Monitor headings of 0, 90, 180, and 270 degrees in table 9 of survey data sheet.

d. Compute Monitor index error as in paragraph 4-12.i and record this value on line 9A of survey data sheet.

e. This index error shall agree with that at Monitor location 8A (paragraph 4-25.d) within ±15 minutes to be considered satisfactory.

4-28. CHECK STRENGTH OF EARTH'S MAGNETIC FIELD AT TURNTABLE LOCATION.

a. Rotate Monitor to 0-degree heading and change controls and switches of Console as follows:

E1-E2 CHECK to E1 CHECK.
READOUT SELECT to 90.
E1 VOLTS and vernier to value 8B recorded in paragraph 4-26.c.

b. Record E1 VOLTAGE SETTING on line 9B of survey data sheet. Adjust E1 CHECK until a null is obtained on NULL INDICATOR. E 1 CHECK shall read 500±30. Record value on line 9C of survey data sheet.

Note

Readings at selected Monitor location and Turntable location should be conducted within 30 minutes to lessen possibility of a shift occurring in earth's field during interval between readings.

c. Compute Turntable Location Correction which is equal to value of Turntable location Monitor index error 9A computed in paragraph 4-27.d minus the value of the Monitor location Monitor index error 8A computed in paragraph 4-25.d. Record on line 9-2 of survey data sheet. Mark correction permanently on pavement at Turntable location. (See figures 4-1 and 4-2.)

d. Set E1-E2 CHECK and POWER ON-OFF to OFF.

4-29. ESTABLISHING NORTH-SOUTH LINE. A north-south line is permanently marked off during magnetic survey to serve as a reference for aligning aircraft during compass swing.

4-30. LOCATE AND MARK NORTH-SOUTH LINE FOR STABILIZER-MOUNTED TRANSMITTER.

a. Set up and level Monitor at Turntable location, using plumb bob. Turntable location is one point on north-south line.

b. Rotate Monitor to sight target used in paragraph 4-23.c. Set Monitor azimuth scale to corrected TB1 Target Bearing recorded in paragraph 4-23.c.

c. Rotate Monitor to 0-degree heading. Mark several points on pavement along line of sight by elevating and de-elevating Monitor telescope. Repeat marking procedure with Monitor rotated to a 180-degree heading.

d. Mark a line through survey ed points with a chalk line marker. Mask along one side of line using masking tape and paint along line edge of mask.

e. Remove masking tape. Resulting painted straight-edge is north-south line.

4-31. LOCATE AND MARK NORTH -SOUTH LINE FOR WING-MOUNTED TRANSMITTER.

a. Accurately set up and level Monitor over Turntable location. Use plumb bob to ensure accuracy.

b. Rotate Monitor to sight target used in paragraph 4-23.c. Set Monitor azimuth scale to corrected TB1 Target Bearing recorded in paragraph 4-23.c.

c. Rotate Monitor to 270-degree heading if using right wing-mounted transmitter, or to 90-degree heading if using left wing-mounted transmitter.

d. Measure along line of sight perpendicular to aircraft centerline a distance equal to distance from aircraft transmitter location to aircraft centerline. Accurately mark this point.

e. Set up Monitor over this point and level. Rotate Monitor to sight on marker at Turntable location. Set Monitor azimuth scale to bearing used in paragraph 4-31.c plus 180 degrees.

f. Rotate Monitor to 0-degree heading. Mark sev - eral points on pavement along line of sight by ele - vating and de-elevating Monitor telescope. Repeat marking procedure with Monitor rotated to 180-degree heading.

g. Mark a line through surveyed points with a chalk line marker. Mask along one side of line using masking tape and paint along line edge of mask.

h. Remove masking tape. Resulting painted straight-edge is north-south line.

4-32. SURVEYING ADDITIONAL TRANSMITTER LOCATIONS. Magnetic north-south line can be used when swinging all types of aircraft compass systems. However, Turntable must be set up at position of transmitter in aircraft to be swung. For this reason, it is often necessary to survey additional Turntable locations. Additional Turntable locations are marked off from north-south line a distance corresponding to distance of transmitter from longitudinal axis of aircraft. As with original Turntable location, hori - zontal and vertical gradient checks are conducted. A Turntable location check, similar to the Monitor location check, is also conducted to determine variation in direction and strength of earth's field between these additional turntable locations and already established Monitor location. If variations between locations do not exceed prescribed limits, additional Turntable locations are acceptable.

4-33. VERTICAL STABILIZER-MOUNTED TRANSMITTER LOCATION CHECK. To perform vertical stabilizer location check, Monitor is set up at a point corresponding to relative position of trans - mitter mounting in aircraft. For vertical stabilizer-mounted transmitter, accurately set up Monitor with plumb bob over a point marked on straight-edge of south portion of north-south line, level Monitor and perform vertical and horizontal gradient checks at this point as described in paragraphs 4-11 through 4-22. If location meets requirements of these checks, proceed as follows:

a. Sight north along north-south line and set Monitor azimuth scale to 0.

b. Connect Console to Monitor and perform procedures of paragraphs 4-17.b, c, and d, and 4-18.

c. Move Monitor to Monitor location, set up and level, and conduct procedures of paragraphs 4-25 and 4-26, except for this location, set E 1 VOLTS controls to E 1 voltage setting recorded when conducting paragraph 4-33.b, and adjust E1 CHECK control to null NULL INDICATOR. Record value in a suitable place.

d. Compute stabilizer Turntable Location Correc - tion which is equal to value of index error in step 4-33.b minus value of index error in step 4-33.c. Permanently mark this correction at stabilizer Turntable location.

4-34. WING-MOUNTED TRANSMITTER LOCATION CHECK. For wing-mounted transmitters, procedure is as follows:

a. Temporarily mark a point along straight edge of north-south line corresponding to position of transmitter in the wing.

b. Set up and level Monitor over this point.

c. Sight along magnetic north-south line in north heading by rotating Monitor. Set Monitor azimuth scale to 0.

d. Rotate Monitor to a 90- or 270-degree heading, depending upon whether transmitter is in right or left wing.

e. Measure a distance from magnetic north-south line equal to distance of aircraft transmitter location from centerline of aircraft. Temporarily mark this point.

f. Set up, level, and center Monitor accurately over this point using plumb bob.

g. Back-sight by rotating Monitor to point on centerline of paragraph 4-34.a.

h. Set Monitor azimuth scale to 90 degrees for left wing-mounted transmitter or 270 degrees for right wing-mounted transmitter. Sight on target TB1 used for reference (paragraph 4-13.d). Record target bearing.

i. Remove plumb bob and adapter and connect Console to Monitor. Rotate Monitor to 0-degree heading. Recheck target bearing.

j. Measure direction and strength of earth's field at this location as described in paragraph 4-33.b.

k. Measure direction and strength of earth's field at Monitor location as directed in paragraph 4-33.c.

l. Compute wing Turntable Location Correction as directed in paragraph 4-33.d and permanently mark this correction at this location.

4-35. RESURVEYING SWING SITE. A check of magnetic properties of swing site consists of repeating Turntable location check as described in paragraphs 4-27 and 4-28. If Turntable location check shows that difference in index errors between two locations has increased by 15 minutes or more, area should be completely resurveyed. A site should be checked at least once every year or if any physical features have been changed.

4-35A. DETERMINE DIRECTION OF EARTH'S MAGNETIC FIELD WITH MONITOR AT MINIMUM HEIGHT.

Note

Paragraphs 4-35A through 4-35T are applicable to Part No. 2592080-8.

.a. Using figure 4-1 or 4-2 as a guide, determine approximate location of compass system transmitter.

b. Place small marker (tape) in proposed transmitter location (hereafter called Turntable location).

c. Set up Monitor on Tripod at minimum height over approximate location of marker.

d. Remove Monitor telescope lens cap.

e. Connect cable W3 between 3J1 of Monitor and 1J3 MONITOR of Console.

Note

For operating convenience, Console may be set up within 10 to 15 feet of Monitor. However, all operating personnel must be at least 10 feet and heavy power equipment at least 80 feet away from Monitor when Console readings are taken. This prevents magnetic disturbances and resultant erroneous readings.

f. Level Monitor and check bubble level by rotating Monitor 180 degrees.

Note

1 If rotation causes level to be off by more than one division, take out half the error with leveling screws and half by adjusting level itself.

2 Since leveling is of utmost importance in magnetic measurements, use extreme care to ensure that the Monitor is properly leveled at all times.

g. Set all Console switches to OFF or 0.

h. Connect cable W1 between J805 of Power Supply and 1J1 POWER of Console.

i. Set Console switches and controls as follows:

MODE SELECTOR to MON
E1 NORM-REV to E1 NORM
F. V. SELECT to 2
READOUT SELECT to F. V.
AREA COMP to 500

MC-2 AREA MAGNETIC SURVEY DATA SHEET | LOCATION

I. VERTICAL GRADIENT

SWITCH AND CONTROL SETTINGS — PART 1 MONITOR SET UP AT MINIMUM TRIPOD HEIGHT

Direction

Δ180, Δ270, Misal to 0.
Heading Selector to 0.
Mode Selector to Mon.
E1 to E1 Norm.
E2 to Off.
FV Select to 2.
The above settings shall not be changed during the Area Magnetic Survey.

E1-E2 Check to Off.
Readout Select to FV.
Power On-Off to Power On.
Exc Volts to 23.5.

TABLE 1

MONITOR HEADING	READOUT ERROR
0	
90	
180	
270	
ALGEBRAIC SUM	

Monitor Index Error

Algebraic sum _____ 1A

4

Strength

Change: E1-E2 Check to E1 Check.
Readout Select to 90.
E1 Check and Area Comp to 500

E1 Voltage Setting _____ 1B

Reference Target Bearing TB1 _____ 1-1

SWITCH AND CONTROL SETTINGS — PART 2 MONITOR SET UP AT MAXIMUM TRIPOD HEIGHT

Direction

Change: E1-E2 Check to Off.
Readout Select to FV.
Power On-Off to Power On.
Exc Volts to 23.5.

TABLE 2

MONITOR HEADING	READOUT ERROR
0	
90	
180	
270	
ALGEBRAIC SUM	

Reference Target Bearing TB1 _____ 2-1

Monitor Index Error

Algebraic Sum _____ 2A

4

Strength

Change: E1-E2 Check to E1 Check.
Readout Select to 90.
E1 Volts and Vernier to 1B.

E1 Voltage Setting (from line 1B) _____ 2B

E2 Check Setting _____ 2C

II HORIZONTAL GRADIENT

SWITCH AND CONTROL SETTINGS — PART 3 MONITOR SET UP AT OPERATING HEIGHT (CENTER OF A 5-FOOT RADIUS CIRCLE)

Direction

Change: E1-E2 Check to Off.
Readout Select to FV.
Power On-Off to Power On.
Exc Volts to 23.5

TABLE 3

MONITOR HEADING	READOUT ERROR
0	
90	
180	
270	
ALGEBRAIC SUM	

Reference Target Bearing TB1 (from line 2-1) _____ 3-1

Monitor Index Error

Algebraic Sum _____ 3A

4

Strength

Change: E1-E2 Check to E1 Check.
Readout Select to 90.
E1 Check Control to 500.

E1 Voltage Setting _____ 3B

SWITCH AND CONTROL SETTINGS — PART 4 MONITOR SET UP AT FIRST POINT ON PERIMETER OF THE CIRCLE

Direction

Change: E1-E2 Check to Off.
Readout Select to FV.
Power On-Off to Power On.
Exc Volts to 23.5.

TABLE 4

MONITOR HEADING	READOUT ERROR
0	
90	
180	
270	
ALGEBRAIC SUM	

Reference Target Bearing TB1 (from line 3-1) _____ 4-1

Monitor Index Error _____ 4A

Strength

Change: E1-E2 Check to E1 Check.
Readout Select to 90.

E1 Voltage Setting (from line 3B) _____ 4B

E1 Check Setting _____ 4C

SWITCH AND CONTROL SETTINGS — PART 5 MONITOR SET UP AT SECOND POINT ON PERIMETER OF THE CIRCLE

Direction

Change: E1-E2 Check to Off.
Readout Select to FV.
Power On-Off to Power On.
Exc Volts to 23.5.

TABLE 5

MONITOR HEADING	READOUT ERROR
0	
90	
180	
270	
ALGEBRAIC SUM	

Reference Target Bearing TB1 (from line 4-1) _____ 5-1

Monitor Index Error _____ 5A

Strength

Change: E1-E2 Check to E1 Check
Readout Select to 90.

E1 Voltage Setting (from line 4B) _____ 5B

E1 Check Setting _____ 5C

TM-MC-2-27 (1)

Figure 4-4A. Area Magnetic Survey Data Sheet (Sheet 1 of 2)

SWITCH AND CONTROL SETTINGS

Direction

Change: E1-E2 Check to Off.
Readout Select to FV.
Power On-Off to Power On.
Exc Volts to 23.5.

Strength

Change: E1-E2 Check to E1 Check.
Readout Select to 90.

PART 6 MONITOR SET UP AT THIRD POINT ON PERIMETER OF THE CIRCLE

TABLE 6

MONITOR HEADING	READOUT ERROR
0	
90	
180	
270	
ALGEBRAIC SUM	

Reference Target Bearing TB1 (from line 5-1) _____ 6-1

Monitor Index Error _____ 6A

E1 Voltage Setting (from line 5B) _____ 6B

E1 Check Setting _____ 6C

PART 7 MONITOR SET UP AT FOURTH POINT ON PERIMETER OF THE CIRCLE

Direction

Change: E1-E2 Check to Off.
Readout Select to FV.
Power On-Off to Power On.
Exc Volts to 23.5.

Strength

Change: E1-E2 Check to E1 Check.
Readout Select to 90.

TABLE 7

MONITOR HEADING	READOUT ERROR
0	
90	
180	
270	
ALGEBRAIC SUM	

Reference Target Bearing TB1 (from line 6-1) _____ 7-1

Monitor Index Error _____ 7A

E1 Voltage Setting (from line 6B) _____ 7B

E1 Check Setting _____ 7C

III. AREA LOCATION CHECKS

PART 8 MONITOR LOCATION ALIGNMENT

Corrected TB1 Target Bearing (TB1 + 3A) _____ 8-1

Bearing of Monitor Location From Turntable Location _____ 8-2

Bearing of TB1 From Monitor Location _____ 8-3

Compass Swing Target Bearing _____ 8-4

SWITCH AND CONTROL SETTINGS

Direction

Change: E1-E2 Check to Off.
Readout Select to FV.
Power On-Off to Power On.
Exc Volts to 23.5.

Strength

Change: E1-E2 Check to E1 Check.
Readout Select to 90.
E1 Check Control to 500.
Area Comp Control to 500.

PART 9 TURNTABLE LOCATION CHECK

TABLE 9

MONITOR HEADING	READOUT ERROR
0	
90	
180	
270	
ALGEBRAIC SUM	

Corrected TB1 Target Bearing (from line 8-1) _____ 9-1

Monitor Index Error _____ 9A

E1 Voltage Setting _____ 9B

PART 10 MONITOR LOCATION CHECK

Direction

Change: E1-E2 Check to Off.
Readout Select to FV.
Power On-Off to Power On.
Exc Volts to 23.5.

Strength

Change: E1-E2 Check to E1 Check.
Readout Select to 90.

TABLE 10

MONITOR HEADING	READOUT ERROR
0	
90	
180	
270	
ALGEBRAIC SUM	

Monitor Index Error _____ 10A

Turntable Location Correction (9A-10A) _____ 10B

E1 Voltage Setting (from line 9B) _____ 10C

Area Comp Setting _____ 10D

TM-MC-2-27(2)

Figure 4-4A. Area Magnetic Survey Data Sheet (Sheet 2 of 2)

j. Connect J803 of Power Supply to 28-volt d-c power source.

k. Set POWER ON-OFF switch to POWER ON.

l. Adjust VOLTS ADJUST control until EXC VOLTS meter indicates 23.5 volts. Ensure that FREQUENCY meter indicates 400±5 cps.

Note

Periodically check FREQUENCY and EXC VOLTS meters to ensure correct operating values.

m. With Monitor set to an arbitrary heading, observe Console readout. Release azimuth scale and set in exact value showing on readout. Rotate Monitor to zero on vernier azimuth scale. Monitor telescope should now be sighting approximately magnetic north and readout should indicate 0±10 minutes. If not, repeat the procedures in this step.

Note

Monitor headings are set by loosening upper clamp and rotating Monitor to obtain desired readings on azimuth scale. Upper clamp should then be tightened at desired heading and vernier used to fine-adjust for exact alignment of Monitor scales. To set azimuth scale, lower clamp should be loosened and scale rotated to desired heading. Then lower clamp should be tightened and vernier used to fine-adjust.

n. Record Console readout errors at Monitor headings of 0, 90, 180, and 270 degrees in table 1 of area magnetic survey data sheet (figure 4-4A).

Note

Readout error is defined as the difference between headings of the Monitor and the heading indicated by Console readout. Positive errors appear on white portion and negative errors appear on red portion of MINUTES tape.

o. Add the four errors algebraically and divide this sum by four to determine Monitor index error. Record this value on line 1A of data sheet.

4-35B. DETERMINE STRENGTH OF EARTH'S MAGNETIC FIELD WITH MONITOR AT MINIMUM HEIGHT.

a. Rotate Monitor heading to 0 degree.

CAUTION

To avoid cable damage, never rotate monitor more than 360 degrees in one direction.

b. Set E1-E2 CHECK switch to E1 CHECK.

c. Set E1 CHECK and AREA COMP verniers to 500.

d. Set READOUT SELECT switch to 90.

e. Adjust E1 VOLTS controls until NULL INDICATOR indicates a null.

f. Record E 1 VOLTS settings on line 1B of data sheet.

g. Set E1-E2 CHECK and POWER ON-OFF switches to OFF.

h. Rotate Monitor to sight a convenient arbitrary target, in any direction, at a distance of 4 miles or more away.

Note

Closer target may be used if space limitations require it, but parallax error must be considered. Parallax is the difference in apparent direction of a target as seen from two different points not on a straight line with the target. One foot separation between observation points will cause a parallax error of about one minute in the bearing of a target at a distance of 1/2 mile.

i. Record azimuth scale bearing as reference target bearing (TB1) on line 1-1 of data sheet.

4-35C. DETERMINE DIRECTION OF EARTH'S MAGNETIC FIELD WITH MONITOR AT MAXIMUM HEIGHT.

a. Raise Monitor to maximum Tripod height.

b. Level Monitor and check bubble level by rotating 180 degrees.

c. Rotate Monitor to sight target (TB1). Set azimuth scale to this bearing.

d. Record target bearing as reference target bearing TB1 on line 2-1 of data sheet.

e. Rotate Monitor to heading of 0 degree.

f. Set READOUT SELECT switch to F. V.

g. Set POWER ON-OFF switch to ON.

h. Adjust VOLTS ADJUST control until EXC VOLTS meter indicates 23.5 volts.

i. Record Console readout errors at Monitor headings of 0, 90, 180, and 270 degrees in table 2 of data sheet.

j. Add the four errors algebraically and divide this sum by four. Record this value on line 2A of data sheet.

k. Compute difference between Monitor index errors recorded on lines 1A and 2A. If difference exceeds 6 minutes, this area is unsuitable for compass calibration.

4-35D. DETERMINE STRENGTH OF EARTH'S MAGNETIC FIELD WITH MONITOR AT MAXIMUM HEIGHT.

a. Rotate Monitor to heading of 0 degree.

b. Set E1-E2 CHECK switch to E1 CHECK.

c. Set READOUT SELECT switch to 90.

d. Set E1 VOLTS controls to value recorded on line 1B of data sheet.

e. Record E 1 VOLTS settings on line 2B of data sheet.

f. Adjust E 1 CHECK control until NULL INDICATOR indicates a null.

g. Record E 1 CHECK setting on line 2C of data sheet. If this setting is greater than 510 or less than 490 divisions, this area is unsuitable for compass calibration.

h. Set E 1-E2 CHECK and POWER ON-OFF switches to OFF.

4-35E. EARTH'S MAGNETIC FIELD HORIZONTAL GRADIENT CHECK. The purpose of the horizontal gradient check is to determine uniformity of earth's magnetic field over a circle of 5-foot radius with its center at Turntable location. This check will ensure that there are no unknown magnetic disturbances in a horizontal plane that might affect indications of the compass calibrator during compass swing.

4-35F. DETERMINE DIRECTION OF EARTH'S MAGNETIC FIELD WITH MONITOR AT OPERATING HEIGHT.

a. Set Monitor to convenient operating height at Turntable location.

b. Rotate Monitor to sight target (TB1).

c. Record target bearing as reference target bearing TB1 on line 3-1 of data sheet.

d. Set Monitor azimuth scale to target bearing.

e. Rotate Monitor to heading of 0 degree.

f. Set READOUT SELECT switch to F. V.

g. Set POWER ON-OFF switch to ON.

h. Adjust VOLTS ADJUST control until EXC VOLTS meter indicates 23.5 volts.

i. Record Console readout errors at monitor headings of 0, 90, 180, and 270 degrees, in table 3 of data sheet.

j. Add the four errors algebraically and divide the sum by four. Record this index error value on line 3A of data sheet.

4-35G. DETERMINE STRENGTH OF EARTH'S MAGNETIC FIELD WITH MONITOR AT OPERATING HEIGHT.

a. Rotate Monitor to heading of 0 degree.

b. Set E1- E2 CHECK switch to E1 CHECK.

c. Set READOUT SELECT switch to 90.

d. Set E1 CHECK and AREA COMP verniers to 500.

e. Adjust E1 VOLTS controls until NULL INDICATOR indicates a null.

f. Record E1 VOLTS settings on line 3B of data sheet.

g. Set E1- E2 CHECK and POWER ON-OFF switches to OFF.

4-35H. DETERMINE DIRECTION OF EARTH's MAGNETIC FIELD AT A POINT ON PERIMETER OF CIRCLE.

a. Locate four points on perimeter of a circle of 5-foot radius using Turntable location as center of circle. Mark points approximately 90 degrees apart.

Note

Two points on the circle should be in line with the target and two points at approximately 90 degrees from the center point line of sight to the target. When the survey is performed on the two points off the line of sight, the parallax error must be considered if the target is less than 4 miles away. Subtract the parallax error in table 4-3 from the index error when the point 5 feet to the left of the center point line of sight is surveyed; add the parallax error to the index error when the point 5 feet to the right is surveyed.

b. Set up and level Monitor at any of these points on perimeter of circle.

c. Record reference target bearing TB1 on line 4-1 of data sheet.

d. Rotate Monitor to sight on target (TB1). Set azimuth scale to this bearing.

e. Rotate Monitor to heading of 0 degree.

f. Set READOUT SELECT switch to F. V.

g. Set POWER ON-OFF switch to POWER ON.

h. Adjust VOLTS ADJUST control until EXC VOLTS meter indicates 23.5 volts.

i. Record Console readout errors at Monitor headings of 0, 90, 180, and 270 degrees in table 4 of data sheet.

j. Add the four errors algebraically and divide the sum by four. Record this index error value on line 4A of data sheet.

Note

If required, correct the index error by the amount of parallax error.

k. Compute difference between values recorded on lines 3A and 4A. If diff erence exceeds 6 minutes, this area is unsuitable for compass calibration.

4-35I. DETERMINE STRENGTH OF EARTH'S MAGNETIC FIELD AT A POINT ON PERIMETER OF CIRCLE.

a. Rotate Monitor to heading of 0 degree.

b. Set E1-E2 CHECK switch to E1 CHECK.

c. Set READOUT SELECT switch to 90.

d. Set E1 VOLTS controls to value recorded on line 3B of data sheet.

e. Record E1 VOLTS settings on line 4B.

f. Adjust E1 CHECK vernier until NULL INDICATOR indicates a null.

g. Record E1 CHECK setting on line 4C of data sheet. If this setting is greater than 510 or less than 490 divisions, this area is unsuitable for compass calibration.

h. Set E1-E2 CHECK and POWER ON-OFF switches to OFF.

4-35J. CHECK DIRECTION AND STRENGTH OF EARTH'S MAGNETIC FIELD AT ADDITIONAL POINTS ON PERIMETER OF CIRCLE. Repeat paragraphs 4-35H and 4-35I with Monitor located at three remaining points on perimeter of circle. Record data in parts 5 through 7 of data sheet.

4-35K. MONITOR LOCATION ALIGNMENT CHECK.

a. Disconnect cable W3 at Monitor.

b. Connect plumb bob and adapter (supplied with alignment equipment) to Monitor connector.

c. Set up and level Monitor at Turntable location.

d. Accurately mark point where plumb bob comes to rest.

e. Rotate monitor to sight target (TB1).

f. Set Monitor azimuth scale to target bearing plus Monitor index error recorded on line 3A of data sheet. Record this value on line 8-1.

g. Place strip of masking tape on pavement near proposed Monitor location.

Note

Proposed Monitor location should be approximately 75 to 100 feet away and far enough from tentative position of north-south line to prevent aircraft from having any magnetic effect on Monitor readings.

h. Mark point on tape with pencil.

i. While pencil is held vertically over this point, rotate Monitor to sight pencil. Record bearing of Monitor location (pencil) from Turntable location on line 8-2 of data sheet.

j. Using plumb bob, accurately set up and level Monitor over selected Monitor location.

k. Rotate Monitor to sight on mark at Turntable location. Pencil may be used as a sighting target.

l. Set Monitor azimuth scale to bearing recorded on line 8-2 of data sheet +180 degrees.

Note

If bearing recorded on line 8-2 was less than 180 degrees, add 180 degrees; if bearing was greater than 180 degrees, subtract 180 degrees.

m. Rotate Monitor to sight on target (TB1).

n. Record bearing of this target from Monitor location on line 8-3.

o. Rotate Monitor to sight a convenient arbitrary target at a distance of 1/2 mile or more.

Note

Target may be in any direction but should preferably be a distinctive target such as a water tower light.

p. Record target bearing on line 8-4.

q. Tentatively mark target bearing at Monitor location.

r. Remove plumb bob and adapter from Monitor.

4-35L. TURNTABLE LOCATION CHECK.

4-35M. DETERMINE DIRECTION OF EARTH'S MAGNETIC FIELD.

a. Set up and level Monitor at Turntable location.

b. Connect Cable W3 to Monitor.

c. Rotate Monitor to sight target (TB1).

d. Set Monitor azimuth scale to bearing recorded on line 8-1. Record this bearing on line 9-1.

e. Set E1- E2 CHECK switch to OFF.

f. Set READOUT SELECT switch to F. V.

g. Set POWER ON-OFF switch to POWER ON.

h. Adjust VOLTS ADJUST control until EXC VOLTS meter indicates 23.5 volts.

i. Record Console readout errors at Monitor headings of 0, 90, 180, and 270 degrees in table 9 of data sheet.

j. Add the four errors algebraically and divide the sum by four. Record the resultant Monitor index error on line 9A.

4-35N. DETERMINE STRENGTH OF EARTH'S MAGNETIC FIELD.

a. Rotate Monitor to heading of 0 degree.

b. Set E1-E2 CHECK switch to E1 CHECK.

c. Set READOUT SELECT switch to 90.

d. Set E1 CHECK and AREA COMP verniers to 500.

e. Adjust E1 VOLTS controls until NULL INDICATOR indicates a null. Record E1 VOLTS settings on line 9B of data sheet.

f. Set POWER ON-OFF switch to POWER OFF.

4-35O. MONITOR LOCATION CHECK.

4-35P. DETERMINE DIRECTION OF EARTH'S MAGNETIC FIELD.

a. Set up and level Monitor at Monitor location.

b. Rotate Monitor to sight target (TB1).

c. Set Monitor azimuth scale to bearing recorded on line 8-3.

d. Set E1-E2 CHECK switch to OFF.

e. Set READOUT SELECT switch to F.V.

f. Set POWER ON-OFF switch to POWER ON.

g. Adjust VOLTS ADJUST control until EXC VOLTS meter indicates 23.5 volts.

h. Record Console readout errors at Monitor headings of 0, 90, 180, and 270 degrees in table 10 of data sheet.

i. Add the four errors algebraically and divide the sum by four. Record the resultant Monitor index error on line 10A.

j. Algebraically subtract Monitor index error recorded on line 10A from that recorded on line 9A. Record the resultant Turntable location correction on line 10B. If this value exceeds 0 ± 18 minutes, select a new Monitor location and repeat paragraphs 4-35K through 4-35P.

4-35Q. DETERMINE STRENGTH OF EARTH'S MAGNETIC FIELD.

a. Rotate Monitor to heading of 0 degree.

b. Set E1-E2 switch to E1 CHECK.

c. Set READOUT SELECT switch to 90.

d. Ensure that E 1 VOLTS controls are set at value recorded on line 9B of data sheet. Record this setting on line 10C.

e. Adjust AREA COMP vernier until NULL INDICATOR indicates a null. Record setting of AREA COMP vernier on line 10D. If this setting exceeds 500 ± 200, select a new Monitor location and repeat paragraphs 4-35K through 4-35Q.

Note

Readings at selected Monitor location and Turntable location should be conducted within 30 minutes to lessen possibility of a shift occurring in earth's field during interval between readings.

f. Set E1-E2 CHECK and POWER ON-OFF switches to OFF.

g. Permanently mark target bearing (line 8-4) at Monitor location.

h. Permanently mark Turntable location correction (line 10B) at Turntable location.

i. Permanently mark AREA COMP setting (line 10D) at Turntable location.

4-35R. ESTABLISHING NORTH-SOUTH LINE.
A north-south line is permanently marked off during area magnetic survey to serve as a reference for aligning aircraft during compass calibration.

4-35S. LOCATE AND MARK NORTH-SOUTH LINE FOR STABILIZER-MOUNTED TRANSMITTER.

a. Set up and level Monitor at Turntable location, using plumb bob and adapter.

b. Rotate Monitor to sight target (TB1).

c. Set Monitor azimuth scale to corrected TB1 target bearing recorded on line 8-1.

d. Rotate Monitor to heading of 0 degree.

e. Mark several points on pavement along line of sight by lowering Monitor telescope.

f. Rotate Monitor to heading of 180 degrees.

g. Repeat step e.

h. Mark a line through surveyed points with a chalk line marker.

i. Mask along one side of line using masking tape.

j. Paint along line edge of mask.

k. Remove masking tape. Resulting painted straight-edge is north-south line.

4-35T. LOCATE AND MARK NORTH-SOUTH LINE FOR WING-MOUNTED TRANSMITTER.

a. Set up and level Monitor at Turntable location, using plumb bob and adapter.

b. Rotate Monitor to sight target (TB1).

c. Set Monitor azimuth scale to corrected TB1 target bearing recorded on line 8-1.

d. Rotate Monitor to heading of 270 degrees (for right wing-mounted transmitters) or 90 degrees (for left wing-mounted transmitters).

e. Measure distance between aircraft centerline and transmitter location.

f. Mark point along Monitor line of sight that is this distance from Turntable location.

g. Set up and level Monitor over this point using plumb bob and adapter.

h. Rotate Monitor to sight on mark at Turntable location.

i. Set Monitor azimuth scale to bearing used in step d. plus 180 degrees.

j. Rotate Monitor to heading of 0 degree.

k. Mark several points on pavement along line of sight by lowering Monitor telescope.

l. Rotate Monitor to heading of 180 degrees.

m. Repeat step k.

n. Mark a line through surveyed points with a chalk line marker.

o. Mask along one side of line using masking tape.

p. Paint along line edge of mask.

q. Remove masking tape. The resultant painted straight-edge is north-south line.

4-36. COMPASS SWINGING PROCEDURES.

4-37. Compass swinging procedures consist of the following related operations:

a. Equipment setup.

b. Magnetic north alignment of transmitter.

c. Determination of E1 and E2 voltage for the transmitter.

d. Determination of Δ180 and Δ270 crosstalk values.

e. Optical transfer of transmitter.

f. Actual aircraft compass swing.

4-38. Following compass swinging procedures are applicable to A-6A aircraft and are intended to be used as a typical example. When swinging compasses in other aircraft, refer to applicable aircraft manual. The Compass Swing Data Sheet, NAVAIR Form 13910/2 (referred to as swing data sheet), for recording values is shown in figure 4-5. Swing data sheet has entries for all essential readings and computations. ~~these entries are keyed to the applicable paragraph in the operating procedure~~. Swing data sheet gives control and switch settings for Console for each check and is intended for use as a guide when performing compass swing. These checks shall be performed in order given.

4-39. EQUIPMENT REQUIRED. Following equipment is required for compass swinging procedures:

a. MC-2 Magnetic Compass Calibrator Set, Sperry Part No. 2592080-2, -4, ~~or~~ -5, or -8.
(Applicable to Part No. 2592080-2, -4, and -5.)

b. Power Cart, Type NC 12 or equivalent.

bA. (Applicable to Part No. 2592080-8.) 28-volt dc power source.

c. Aircraft stand or ladder that will reach aircraft transmitter location.

d. A 6-foot measuring tape.

4-40. EQUIPMENT SETUP. (See figure 4-6.)

a. Remove following equipment from Compass Calibrator transit case: two Tripods, Monitor, Turntable; Console; power cable (W1), transmitter cable (W2), and Monitor cable (W3).

b. Set one Tripod over Turntable location. Adjust legs to convenient operator height. Level Turntable and check bubble level by rotating 180 degrees. If level is off more than one division, take out half of error with leveling screws and half by adjusting level itself.

c. Set another Tripod over Monitor location. Remove Monitor from case and mount it on Tripod. Level Monitor in same manner as Turntable.

d. Set Console within 40 feet or less (minimum 10 feet) of the Turntable. Remove cover of Console.

e. Unreel power cable, transmitter cable, and Monitor cable from their reels. Connect power cable end W1P1 to 1J1 POWER of Console, and end W1P2 to a-c Power Cart or J805 of Power Supply (for Part No. 2592080-8).

Note

Power Cart or Power Supply should be minimum of 80 feet away from Console, Monitor, and Turntable.

f. Connect transmitter cable end W2P1 to 1J2 TRANS of Console, and end W2P2 to bottom connector 4J1 of Turntable.

MC-2 COMPASS SWING DATA SHEET		LOCATION	
AIRCRAFT TYPE	COMPASS SYSTEM	TRANSMITTER PN	SN

SECTION A CHECK THE MAGNETIC BEARING AT THE MONITOR LOCATION

SWITCH AND CONTROL SETTINGS

Δ180, Δ270, Misal to 0.
Heading Selector to 0 Degrees.
E1-E2 Check to Off.
E1, E2 Volts to Off.
Mode Selector to Mon.
Readout Select to FV.
Transmitter Select as required.
Power On-Off to Power On.
Exc Volts to 23.5.
Area Comp to A-6
(PN 2592080-8 Only)

TABLE A

MONITOR HEADING	READOUT ERROR
0	
90	
180	
270	
ALGEBRAIC SUM	

Reference Target Bearing _____ A-1

Monitor Index Error = $\frac{\text{Algebraic Error Sum}}{4}$ _____ A-2

Turntable Location Correction _____ A-3

Corrected Monitor Index (A-2) + (A-3) _____ A-4

Monitor Zero Error _____ A-5

Area Comp Setting _____ A-6

SECTION B ALIGN THE TRANSMITTER MAGNETICALLY

SWITCH AND CONTROL SETTINGS

Change: Mode Selector to Cal.

TABLE B

TURNTABLE HEADING	READOUT ERRORS INITIAL	1ST	2ND	3RD	AVG	CORRECTED MANUAL SWING ERROR (AVG MINUS INDEX B-1)
0						
90						
180						
270						
ALGEBRAIC SUM						

Transmitter Index Error =

$\frac{\text{Algebraic Sum}}{4}$ _____ B-1

NOTE

Correct index until error is within ±15 minutes.

Change: Mode Selector to Mon.

Monitor Zero Error _____ B-2

SECTION C DETERMINE THE E1 AND E2 VOLTAGES FOR THE TRANSMITTER

SWITCH AND CONTROL SETTINGS

Change: Mode Selector to Cal.
E1, E2 Volts as specified in tables C1 and C2.
Heading Selector to 90 Degrees.
Readout Select as specified in tables C1 and C2.

TABLE C1	E2	TABLE C2	E1
E1 TO OFF E2 TO NORM READOUT TO 0 TURNTABLE 270		E1 TO REV E2 TO OFF READOUT TO 90 TURNTABLE 180	
E2 TO REV READOUT TO 0 TURNTABLE 90		E1 TO NORM READOUT TO 90 TURNTABLE 0	
VERNIER SUM		VERNIER SUM	

E2 Vernier Average =

$\frac{\text{E2 Vernier Sum}}{6}$ _____ C-1

E1 Vernier Average =

$\frac{\text{E1 Vernier Sum}}{6}$ _____ C-2

Change: Mode Selector to Mon.
E1-E2 to Norm.
E1 Volts to C-2.
E2 Volts to C-1.
E1-E2 Check as required.
Readout Select to 90.

E1 Check Control Setting, E1-E2 Check Switch to E1 Check. _____ C-3

E2 Check Control Setting, E1-E2 Check Switch to E2 Check. _____ C-4

SECTION D DETERMINE THE Δ180 AND Δ270 VALUES

Change: E1-E2 Check to Off.
Readout Select to FV.

Monitor Zero Error _____ D-1

Misal Control Setting: (B-1) + (D-1) - (B-2) _____ D-2

Change: Mode Selector to Cal.
E1 Volts to C-2.
E2 Volts to C-1.
Misal to D-2.
Heading Selector as indicated.
E1-E2 to Norm.

(Turntable to 0 Heading.)

TABLE D

HDG. SELECTOR	READOUT ERROR 1	2	3	AVG	CORRECTED MANUAL SWING ERROR (From Table B)	(E-M) ELECTRICAL ERROR MINUS MANUAL ERROR	CORRECTED ELECTRICAL SWING
0							
90							
180							
270							

Δ180 $E\text{-}M_{180}$

Δ270 $E\text{-}M_{90} + E\text{-}M_{270}$ _____ D-3

$E\text{-}M_{90}$ shall be equal to $E\text{-}M_{270}$ ± 9 minutes; if not, repeat sections B and C. _____ D-4

TM-MC-2-11

Figure 4-5. Typical Compass Swing Data Sheet (Sheet 1)

SECTION E OPTICAL TRANSFER OF THE TRANSMITTER

Plumb Bob Separation Along Aircraft	_____ E-1
Displacement of Nose of Aircraft from N-S Line	_____ E-2
Displacement of Tail of Aircraft from N-S Line	_____ E-3
Plumb Bob Total Displacement (E-2) - (E-3)	_____ E-4
Aircraft Misalignment with N-S Line	_____ E-5
Optical Alignment Correction = Aircraft Misalignment (E-5) + (A-4) + (B-2) - (A-5) - (B-1)	_____ E-6

SECTION F COMPASS SWING

SWITCH AND CONTROL SETTINGS

E1-E2 to Norm.
E1-E2 Check to Off.
Mode Selector to Mon.
Heading Selector to 0 Degrees.
Readout Select to FV.
E1 Check to C-3.
E2 Check to C-4.

Monitor Zero Error	_____ F-1
Misal Control Setting (E-5) + (A-4) + (F-1) - (A-5)	_____ F-2
Δ180 Correction Value (from D-3)	_____ F-3
Δ270 Correction Value (from D-4)	_____ F-4
E1 Check Control Setting (from C-3)	_____ F-5
E2 Check Control Setting (from C-4)	_____ F-6

Change: Readout Select to 90.
E1, E2 Volts to null Null Indicator.

E1 Recorded with E1-E2 Check to E1 Check.	_____ F-7
E2 Recorded with E1-E2 Check in E2 Check.	_____ F-8

Change: E1-E2 Check to Off.
Misal to F-2.
Mode Selector as required.
Heading Selector as required.
Readout Select as required.

ONE-CYCLE ERROR COMPENSATION

TABLE F1

HDG. SELECTOR	SYSTEM READOUT ERROR 1	2	3	4
0				
90				
180				
270				

$$\text{Index} = \frac{E_0 + E_{90} + E_{180} + E_{270}}{4}$$

$$\text{N-S Error} = \frac{E_0 - E_{180}}{2}$$

$$\text{E-W Error} = \frac{E_{90} - E_{270}}{2}$$

SYSTEM ERROR COMPENSATION

TABLE F2

HDG. SELECTOR	SYSTEM READOUT ERROR 1	2	3	HDG. SELECTOR	SYSTEM READOUT ERROR 1	2	3	HDG. SELECTOR	SYSTEM READOUT ERROR 1	2	3
0				120				240			
15				135				255			
30				150				270			
45				165				285			
60				180				300			
75				195				315			
90				210				330			
105				225				345			

REMARKS

NAVAIR FORM 13910/2 (5-66) (BACK)

A-35809

Figure 4-5. Typical Compass Swing Data Sheet (Sheet 2)

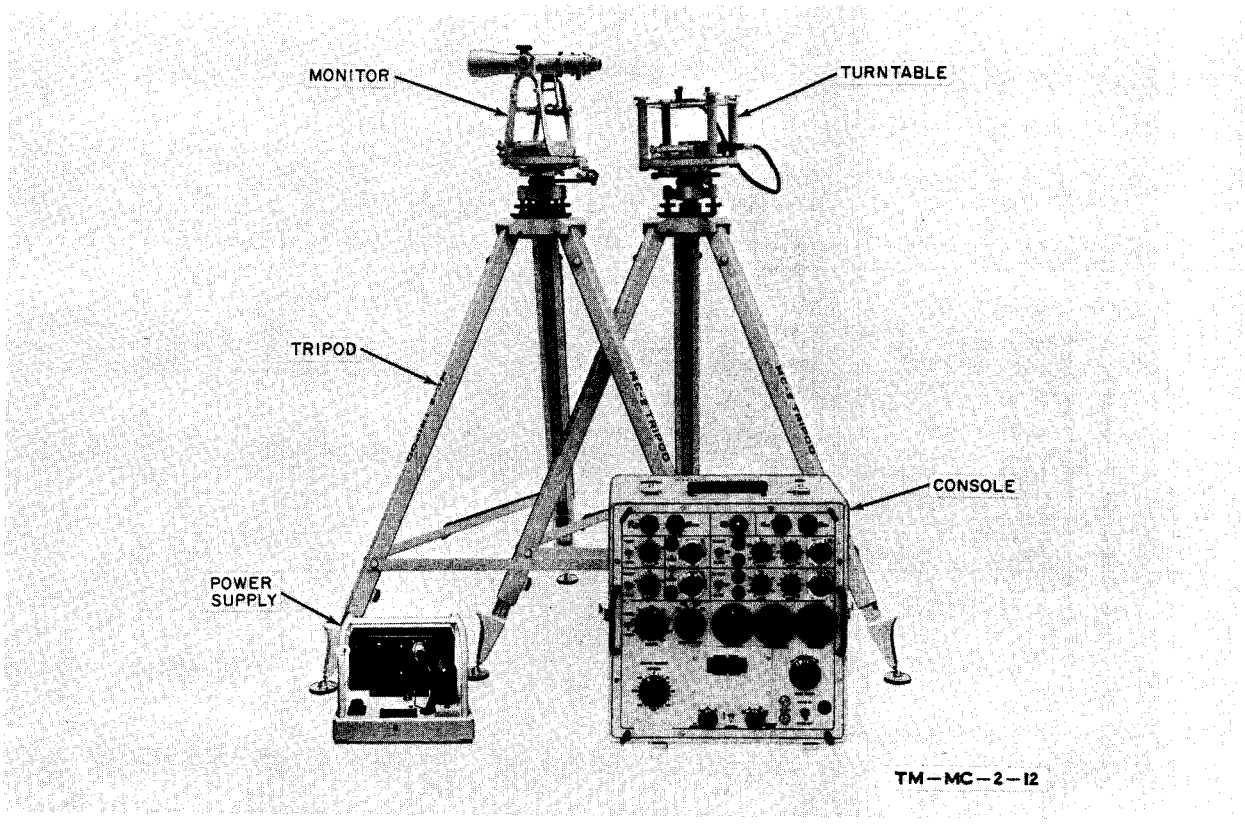

Figure 4-6. Equipment Used to Index and Align the Transmitter

g. Connect Monitor cable end W3P1 to 1J3 MON of Console, and end W3P2 to bottom connector 3J1 of Monitor.

4-41. TRANSMITTER MOUNTING PROCEDURE.

a. Attach the ML-1 mounting plate to Turntable and mount ML-1 transmitter to mounting plate. Secure transmitter with three thumb screws provided. See figure 4-7. Remove compensator from transmitter during all alignment procedures.

b. Connect transmitter leads to terminals on ML-1 plate as follows:

White-A	Red-D
Blue-B	Black-E
Yellow-C	Green-F

Note

For ML-1 transmitter, plate, Part No. 2580974, will be used. For all other transmitters, Part No. 2580280 is to be used. Additional quick connector parts, if needed, are supplied with Alignment Equipment.

4-42. DETERMINE INITIAL MAGNETIC BEARING OF NORTH-SOUTH LINE.

a. (Applicable to Part No. 2592080-2, -4, and - 5.) Start 400-cycle Power Cart.

aA. (Applicable to Part No. 2592080-8.) Connect J803 of Power Supply to 28-volt dc power source.

aB. Set Console switches and controls as follows:

E1 NORM.-REV. to OFF.
E2 NORM.-REV. to OFF
E1-E2 CHECK to OFF.
MODE SELECTOR to MON.
HEADING SELECTOR to 0 DEGREES.
Δ180, Δ270, and MISAL to 0.
READOUT SELECT to FV.
FV SELECT to 1 (ML-1) or 2 (Standard Transmitter).
DAMPING to OFF.
POWER ON-OFF to POWER ON.
EXC VOLTS to 23.5.
AREA COMP to value determined in survey (Part No. 2592080-8 only.)

Note

Periodically observe EXC VOLTS meter for correct voltage of 23.5, and FREQUENCY meter for correct frequency of 400 cycles.

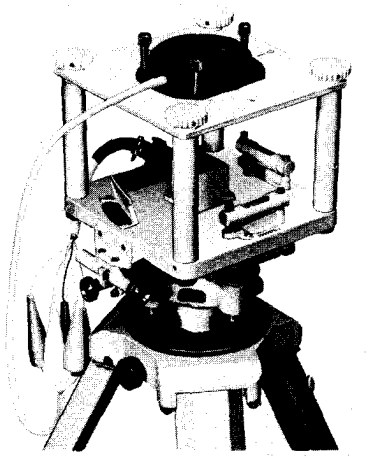

TM-MC-2-13

Figure 4-7. Transmitter Mounted on Turntable (Typical).

b. Rotate Monitor to sight reference target through Monitor telescope. Set Monitor azimuth scale to bearing of reference target. Enter target bearing on line A-1 of swing data sheet (fig. 4-5).

c. Rotate Monitor to 0-degree heading. Record difference between readout value and Monitor azimuth scale reading as error at 0 degrees. Enter this value in Error column of table A of swing data sheet.

Note

Readout Error is defined as difference between headings of Monitor, Turntable, or HEADING SELECTOR and heading indicated by Console readout when at null. Error is positive if angle indicator indication is higher than Monitor, Turntable, or HEADING SELECTOR. Error is negative if Console readout is lower. Positive errors appear on white scale and negative errors appear on red scale of angle indicator readout.

d. Rotate Monitor to headings of 90, 180, and 270 degrees. Null and record error at each of these headings in table A as in step c.

e. Reset Monitor to 0-degree heading. Compute index error of Monitor by adding four heading errors algebraically in table A of swing data sheet, divide sum by 4, and enter result on line A-2 of swing data sheet.

f. Enter Turntable correction from paragraph 4-28.c on line A-3 of swing data sheet. Correct Monitor index by algebraically adding to it Turntable location correction, and enter result on line A-4 of swing data sheet. This value represents initial magnetic bearing of north-south line.

g. Observe readout error and record on line A-5 of swing data sheet as Monitor zero error. This value serves as a reference to determine subsequent shifts in direction of earth's magnetic field.
h. (Applicable to Part No. 2542060-8.) Record AREA COMP setting (from survey) on line A-6.

4-43. MAGNETIC NORTH ALIGNMENT OF TRANSMITTER.

a. Change Console MODE SELECTOR to CAL.

b. Rotate Turntable to obtain 0 degrees ±10 minutes on HEADING and ERROR readout. Record error in Initial column of table B. Set Turntable azimuth scale to 0.

c. Rotate Turntable to headings of 90, 180, and 270 degrees, tapping transmitter lightly at each point. Record readout error at each heading to obtain a set of preliminary or Initial readings. Record these in Initial column.

d. Compute Initial transmitter index error as algebraic sum of four Initial errors divided by four. If error is greater than ±10 minutes, set Turntable azimuth scale to value of heading plus algebraic error, then rotate Turntable to 0-degree heading.

EXAMPLE: Index error is +20' with azimuth scale set at 270°. Set azimuth scale to read 270° +20'.

e. Return Turntable to 0-degree heading. Record 0-degree error three additional times, tapping transmitter lightly between each reading. Enter these errors in 1st, 2nd, and 3rd columns of table B of swing data sheet.

f. Repeat paragraph 4-43.e at Turntable headings of 90, 180, and 270 degrees, and record these errors in table B of swing data sheet in designated spaces.

g. Compute average of three errors at each heading and record each average error in AVG column of table B of swing data sheet.

h. Compute transmitter index error as average of algebraic sum of four values in AVG column. If average is ±15 minutes or less, record value on line B-1 of swing data sheet (figure 4-5) and proceed to paragraph 4-44. If average exceeds ±15 minutes, repeat step d of paragraph 4-43 and then repeat steps e through g of paragraph 4-43.

i. To obtain corrected manual swing values, subtract transmitter index error B-1, paragraph 4-43.h, from each average error. Enter these values in Corrected Manual swing column of table B.

j. Set MODE SELECTOR of Console to MON. Value indicated on ERROR readout is Monitor zero error. Allow 30 seconds for readout to stabilize and record this error on line B-2 of swing data sheet.

4-44. DETERMINE THE E1 and E2 VOLTAGES FOR TRANSMITTER. E1 and E2 voltages are measured in terms of E 1 and E2 voltage control settings. There are three controls for both E 1 and E2 voltages. First control (E 1, E2 VOLTS switch) is calibrated in units of 10 volts; second (E 1, E2 VOLTS switch) is calibrated in units of 1 volt; and third is a vernier control with a range of 2 volts. Both E1 and E2 voltages are determined from average of readings taken with transmitter initially set to a specific direction and then with transmitter rotated 180 degrees. Because of tolerances of 1- and 10-volt cont rols, an accurate average can be computed only when both readings are made with vernier control, 1-, and 10-volt controls remaining at same position for both readings. Unless transmitter is defective, difference between reading taken at one heading and reading taken with transmitter rotated 180 degrees should not exceed 1 volt on vernier control. However, if first reading is taken at either extreme of vernier control range (2 volts), second reading may require changing 1-volt control. To prevent this, observe the following:

4-45. If error measured at 0-degree heading of transmitter during indexing operations is more positive than error at 180-degree heading, E2 voltage measured at 90-degree heading of transmitter during calibration operation will exceed E2 voltage measured at 270-degree heading. Thus initial vernier reading (transmitter at 270-degree heading) should be less than 500. If error at 0-degree heading is more negative than error at 180-degree heading, E2 reading at 90-degree heading will be less than E2 voltage measured at 270-degree heading and vernier reading at 270-degree heading should be greater than 500.

4-46. If error measured at 90-degree heading of transmitter during indexing operation is more positive than error at 270-degree heading, E1 voltage measured at 180-degree heading of transmitter during calibration operation will exceed E 1 voltage measured at 0-degree heading. Thus, initial vernier reading (at 180-degree heading) should be greater than 500. If error at 90-degree heading is more negative than error at 270-degree heading, E1 voltage at 180-degree heading will be less than E 1 voltage at 0-degree heading and vernier reading at 180-degree heading should be less than 500.

4-47. DETERMINE E2 VOLTAGE.

a. Set up controls and switches of Console as follows:

MODE SELECTOR to CAL.
HEADING SELECTOR to 90 DEGREES.
E1 NORM.-REV. to OFF.
E2 NORM.-REV. to E2 NORM.
READOUT SELECT to 0.

b. With Turntable set to 270-degree heading, adjust E2 voltage controls to null NULL INDICATOR. Record value of E2 voltage in designated space of table C1. Tap transmitter and readjust E2 vernier voltage control each time to obtain two additional E2 voltage readings. Enter these vernier values in designated spaces of table C1.

Note

If transmitter error at 0 degrees is more positive than error at 180 degrees (paragraph 4-43), then E2 volts vernier control should be 500 or less. If error at 180 degrees is more positive than error at 0 degrees, E2 volts vernier control should be 500 or more.

c. Rotate Turntable to 90-degree heading and tap transmitter. Set E2 NORM.-REV. to E2 REV. and adjust only E2 vernier control to null NULL INDICATOR.

Note

If E2 vernier control requires more than five complete rotations to null NULL INDICATOR, transmitter is out of tolerance and shall be replaced.

d. Repeat step c two more times, tapping transmitter between each reading and recording vernier settings.

e. Compute average vernier setting by adding six readings and dividing total by six. Enter this value plus E2 VOLTS switch settings on line C-1 of swing data sheet.

f. Set E2 VOLTS switches and vernier controls to value computed in step e and set E2 NORM.-REV. to OFF.

4-48. DETERMINE E1 VOLTAGE.

a. Change controls and switches of Console as follows:

E1 NORM.-REV. to E1 REV.
READOUT SELECT to 90.

b. Rotate Turntable to 180-degree heading. Tap transmitter lightly. Adjust E1 voltage controls to null NULL INDICATOR and record E 1 voltage control setting on line 1 of table C2 of swing data sheet.

Note

If transmitter error is more positive at 90 degrees than at 270 degrees, E 1 vernier control shall indicate 500 or more. If error is more positive at 270 degrees than at 90 degrees, E 1 vernier control shall indicate 500 or less.

c. Repeat step b two more times, tapping transmitter between each reading, and record vernier settings in table C2 of swing data sheet.

d. Rotate Turntable to 0-degree heading and tap transmitter lightly. Set E 1 switch to E 1 NORM. and adjust only E1 vernier control to null NULL INDICATOR. Record vernier setting in table C2 of swing data sheet.

Note

If E1 vernier control requires more than five complete rotations to null NULL INDICATOR, transmitter is out of tolerance and shall be replaced.

e. Repeat step d two more times, tapping t rans - mitter lightly between each setting, and record vernier settings in table C2 of swing data sheet.

f. Compute average E 1 vernier setting by adding six vernier readings and dividing by six. Enter this value plus E1 VOLTS switch settings on line C-2 of swing data sheet. Set E1 voltage control knobs to this value and return HEADING SELECTOR to 0 DEGREES.

4-49. DETERMINE E1 AND E2 CHECK SETTINGS.

a. Set up controls and switches of Console as follows:

MODE SELECTOR to MON
E1 NORM. -REV. to E1 NORM.
E2 NORM. -REV. to E2 NORM.
E 1-E2 CHECK to E1 CHECK.
READOUT SELECT to 90.

c. Set E1-E2 CHECK switch to E2 CHECK. Adjust E2 CHECK control to null NULL INDICATOR. Lock E2 CHECK control and record E2 CHECK control setting on line C-4 of swing data sheet.

4-50. DETERMINE TRANSMITTER Δ180 AND Δ270 CROSSTALK VALUES.

a. Set controls and switches of Console as follows:

E1-E2 CHECK switch to OFF.
READOUT SELECT to FV.

b. Check and record Monitor zero error on line D-1 of swing data sheet with Monitor set to 0-degree heading.

c. Compute total transmitter misalignment error, which is equal to value on line B-1, plus D-1 minus B-2. Set MISAL MINUTES switch to 3-minute position nearest this calculated value. Enter calculated MISAL value on line D-2 of swing data sheet.

Note

Set MISAL polarity switch to -MISAL if total index error is negative, and to +MISAL if total index error is positive.

d. Check that controls and switches of Console are set as follows:

MODE SELECTOR to CAL.
E1 NORM. -REV. to E1 NORM.
E2 NORM. -REV. to E2 NORM.
E 1 voltage controls to value recorded at C-2.
E2 voltage controls to value recorded at C-1.
MISAL switches to value recorded at D-2.

e. Perform a four-heading electrical swing by setting Console HEADING SELECTOR to positions corresponding to four cardinal headings with Turntable at 0-degree heading.

f. Take three error readings at each heading and record them in columns 1, 2, and 3 of table D of swing data sheet. Tap transmitter lightly between each complete electrical swing. Enter average of readings at each heading in AVG column of table D.

g. Enter corrected manual swing errors from table B in corrected manual swing columns of table D. Subtract these values from those in AVG Readout Error column of table D and enter results in Elec - trical Minus Manual Errors column of table D.

h. Values in Electrical Minus Manual Errors column at each cardinal heading shall not exceed following:

At 0 degree:	±5 minutes.
At 90 degrees:	±30 minutes.
At 180 degrees:	±60 minutes.
At 270 degrees:	±30 minutes.

i. Electrical Minus Manual error at 90 degrees shall equal Electrical Minus Manual error at 270 degrees within 9 minutes. If not, repeat E1 and E2 voltage calibration procedures, paragraphs 4-44 through 4-49.

j. Calculate Δ180 and Δ270 crosstalk errors and enter on lines D-3 and D-4 of swing data sheet. The Δ 180 is average electrical swing error at 180 degrees minus corrected manual swing error at 180 degrees. The Δ270 is average electrical swing error at 90 degrees minus corrected manual swing error at 90 degrees plus average electrical swing error at 270 degrees, minus corrected manual swing error at 270 degrees.

k. Set in Δ180 and Δ270 errors on their respective MINUTES switches. The Δ180 and Δ270 switches are calibrated in units of 3 minutes, so that an error at 2 minutes will require a switch setting of 3 minutes.

Note

Set Δ180 and Δ270 polarity switches to negative setting if errors are negative, and to positive setting if errors are positive.

l. Perform a corrected four-heading electrical swing by setting Console HEADING SELECTOR to positions corresponding to four cardinal headings with Turntable at 0-degree heading.

m. Take three error readings at each heading, tapping transmitter lightly between each complete electrical swing. Enter average of readings at each heading in AVG column of table D.

n. Corrected electrical swing errors should be within 6 minutes of corrected manual swing errors. If this condition is not met, repeat paragraphs 4-43.a through 4-50.j.

o. After completion of electrical swing procedures, set POWER ON-OFF switch of Console to POWER OFF.

4-51. OPTICAL TRANSFER OF TRANSMITTER. Alignment equipment is used to maintain alignment of transmitter during removal from Turntable and installation in aircraft. Figure 4-8 shows a method of coupling optical alignment telescope to transmitter. Other coupling methods depend on location and type of transmitter in aircraft. Optical alignment equipment adapters are included with Compass Calibrator to adapt certain aircraft transmitters. Optical alignment equipment adapters for specific aircraft are supplied in accessory kits furnished by particular airframe manufacturers.

CAUTION

Optical transfer is a critical procedure and should be conducted with extreme care. Use precaution to prevent
jarred, upset, or knocked out of adjustment before ~~it~~ transmitter is fully secured in aircraft.

4-52. Attach Alignment Equipment to transmitter as follows:

a. Select required installation components for type of transmitter and aircraft mounting from Alignment Equipment or special adapter kit.

Note

Make sure all screws are properly seated and there is no motion in adapters.

b. Loosen Turntable upper motion clamp during following operations to prevent any inadvertent torque against lower motion clamp.

c. Remove transmitter connections.

d. Mount alignment equipment to transmitter. Rotate Turntable to 0-degree heading.

e. Center fine azimuth adjustment screw on telescope. Loosen telescope azimuth clamp and sight a target which is at least one-half mile away and which can be seen both from Turntable location and from transmitter location in aircraft. Center liquid level on telescope when sighting on target.

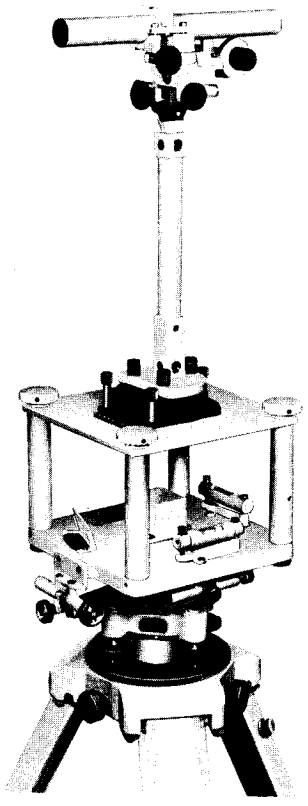

Figure 4-8. Alignment Equipment Setup for Wing-Mounted Thin Transmitter (Typical).

f. Tighten azimuth clamp and make fine azimuth adjustment on target with fine adjustment screw. With crosshairs centered, tighten fine azimuth adjustment clamp and then rotate drum dial to 0. Target should still be centered in crosshairs. Check that all adjustments are tight.

g. Remove transmitter and mount assembly from Turntable.

h. Have aircraft towed into position with longitudinal axis of aircraft located as directly as possible over north-south line that was marked off during magnetic survey. Nose of aircraft must be at north heading with transmitter access over Turntable location.

i. Drop a plumb line from aircraft centerline at nose and at tail. Measure distance between two plumb lines along aircraft centerline. This is Plumb Bob Separation. Record this value on line E-1 of swing data sheet, figure 4-5.

j. Measure lateral displacement of each plumb line from north-south line. If this displacement is west of north-south line, it shall be considered to have a negative value and if to east, it shall be considered positive. Enter these values on lines E-2 and E-3 of swing data sheet as designated.

k. Algebraically subtract lateral displacement at tail from lateral displacement at nose. Result is Plumb Bob Total Displacement in inches. Enter this value on line E-4 of swing data sheet. Aircraft Misalignment angle assumes polarity of Plumb Bob Total Displacement.

l. Mark a vertical straight line on Nomograph (figure 4-9), along PLUMB BOB SEPARATION scale (feet) and mark a horizontal straight line along PLUMB BOB DISPLACEMENT scale (inches) at values recorded in section E. At point that these two lines intersect, read misalignment angle in minutes on ~~Aircraft~~ Aircraft Misalignment line nearest intersection (estimate), and record this angle as Aircraft Misalignment With North-South Line E-5.

m. Compute total Optical Alignment Correction E-6, which is sum of Aircraft Misalignment E-5, Corrected Monitor Index A-4, and Monitor Zero Error B-2, minus Monitor Zero Error A-5 and Transmitter Index Error B-1. Record result on line E-6 of swing data sheet.

n. Loosen fine adjustment screw clamp of Alignment Equipment telescope and rotate telescope fine adjustment by an amount equal to optical alignment correction E -6. Clockwise rotation of drum dial corresponds to increasing heading. One turn of dial is equivalent to 1 degree of correction. Each dial division is equal to 1 minute. If E-6 is positive, rotate fine azimuth adjustment clockwise for top -mounted transmitters and counterclockwise for bottom-mounted transmitters.

o. Place transmitter in aircraft mounting bracket and partially fasten three mounting screws.

Note

For transmitters mounted under wing, make electrical connections and mount compass system magnetic compensator before installing in aircraft.

p. Sight on same target as in paragraph 4-52.e, by rotating transmitter until target is aligned with vertical crosshair in telescope.

q. Level telescope using leveling adjustment screws until liquid level is centered and target is aligned with horizontal crosshair. Center target vertically in telescope. Tighten mounting screws holding down transmitter Recheck alignment and if alignment is correct, remove optics. alignment equipment from transmitter Attach magnetic compensator to the transmitter and connect the leads to the transmitter access panel terminal strip.

4-53. ~~ACTUAL~~ AIRCRAFT COMPASS SWING. Procedures are given for swinging compass in A-6A aircraft. For other types of aircraft, operator should refer to applicable aircraft manual. Figure 4-10 shows A-6A Accessory Kit.

a. Connect end W1J1 of adapter cable W1 to cable P8 of aircraft wiring connected to KE28 compensator of MA-1 Compass, System.

b. Position Console in or near aircraft so that readout can be seen from compensator location. Leave Monitor at Monitor location. Interconnect Console, Monitor, and Power Cart. Refer to paragraph 4-12.d. Connect Console to aircraft compass system through adapter table and appropriate special purpose cable. Connect cable W2 from 1J2 (TRANS) of Console to other end of adapter cable W1J1. Start Power Cart.

c. Check that controls and switches of Console are set as follows:

HEADING SELECTOR to 0.
El NORM. -REV. to E1 FORM.
E2 NORM. -REV. to E2 FORM.
MODE SELECTOR to MON.
E1-E2 CHECK to OFF.
READOUT SELECT to FV.
FV SELECT as required. (For A-6A, Set to 1.)
POWER ON-OFF to POWER ON.
AREA COMP to A-6 (Part No. 25-92080-8)

d. Check that EX. VOLTS meter indicates 23.5 and FREQUENCY meter indicates 400±5 cps. Vary VOLTS ADJUST control if necessary.

e. Observe and record Monitor Zero Error on line F-1 of swing data sheet.

f. Enter MISAL control setting on line F-2. This setting is determined by adding Aircraft Misalignment E-5, Monitor Index A-4, and Monitor Reading F-1, and subtracting Monitor Zero Reading A-5. Set MISAL MINUTES switch of Console to calculated setting.

g. Enter E1-E2 CHECK values C-3 and C-4 on lines F-5 and F-6 of swing data sheet. Set E1-E2 CHECK controls to these values. Enter Δ180 and Δ270 correction values D-3 and D-4 on lines F-3 and F-4 of swing data sheet. Set Δ180 and Δ270 switches to these values.

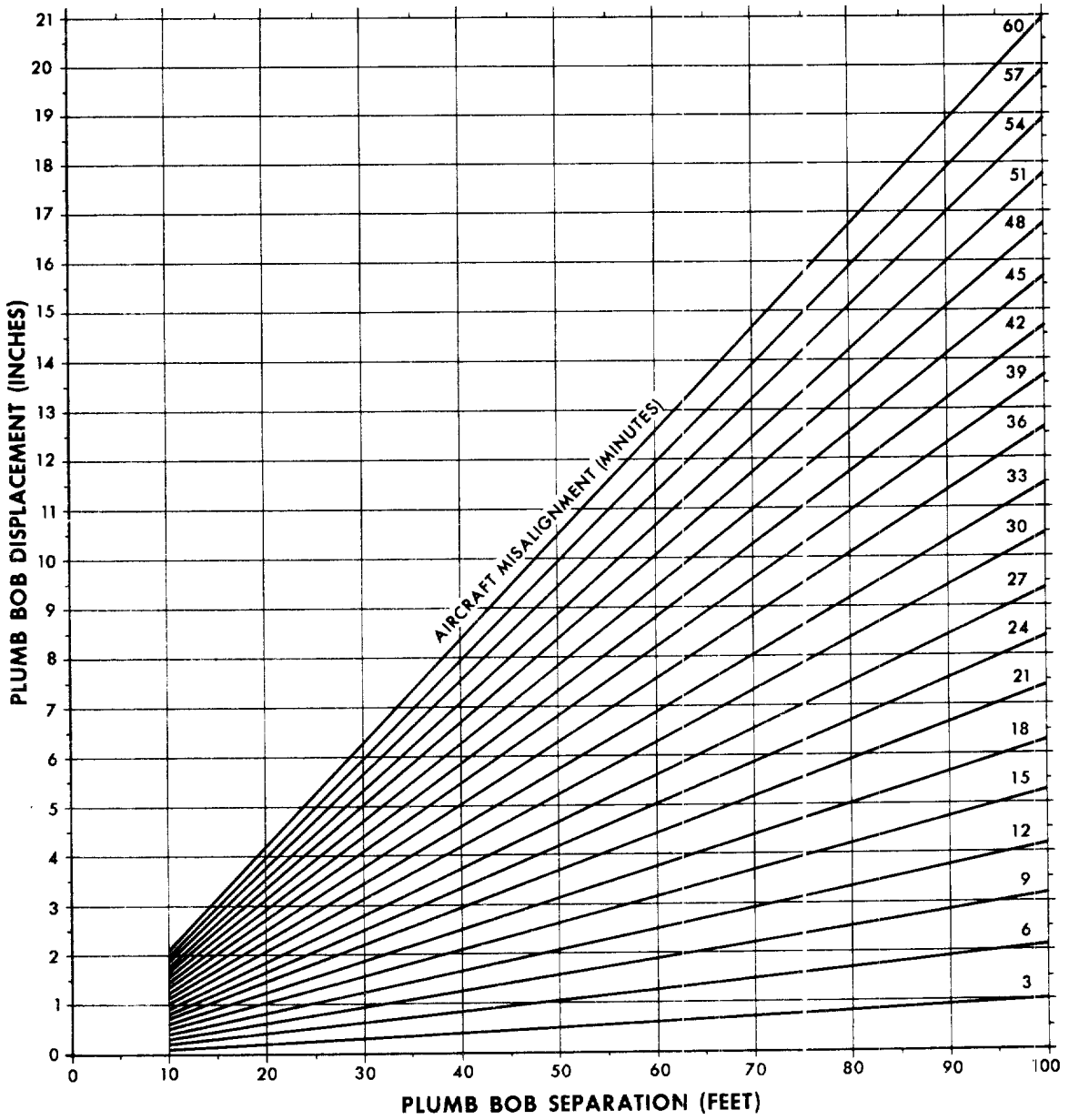

45-15CAA24-32

Figure 4-9. Nomograph

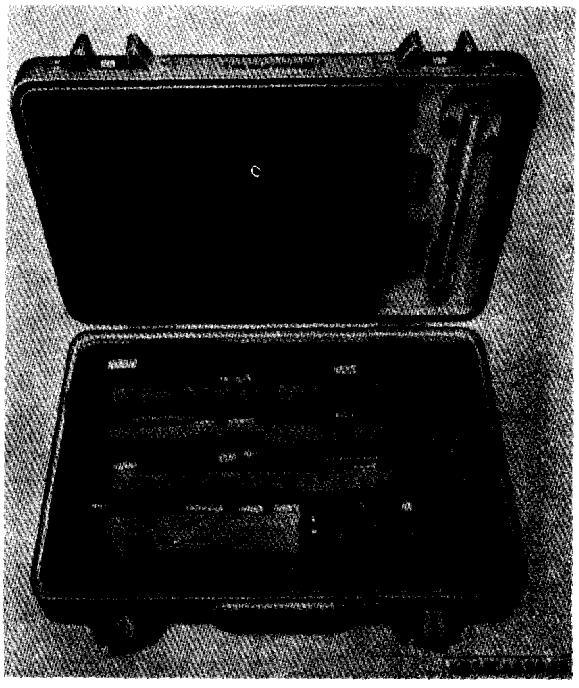

Figure 4-10. A-6A Accessory Kit

h. Change controls and switches of Console as follows :

E1-E2 CHECK to E1 CHECK.
READOUT SELECT to 90.

i. Adjust E1 voltage controls to null NULL INDICATOR. Record voltage value on line F-7 of swing data sheet. Set E1-E2 CHECK switch to E2 CHECK and adjust E2 voltage controls to null NULL INDICATOR. Record value of E2 voltage on line F-8 of swing data sheet. Set E1-E2 CHECK switch to OFF.

4-54. ONE-CYCLE ERROR COMPENSATION. (For A-6A aircraft. See applicable manual for compen - sation in other types of aircraft.)

a. Set MODE SELECTOR to CAL. Conduct four-heading electrical swing by rotating HEADING SELECTOR to 0, 90, 180, and 270 degrees. Enter errors in table F1 of swing data sheet.

b. Repeat electrical swing to obtain errors while adjusting transmitter compensator so that error at O degrees equals error at 180 degrees (N-S) and error at 90 degrees equals error at 270 degrees (E-W) within ±12 minute 3.

4-55. SYSTEM ERROR COMPENSATION.

a. Set MODE SELECTOR to MON. Disconnect adapter cable W1 and connect adapter cable W2 as follows :

End W2P1 to J8 of KE28 compensator.
End W2J1 to cable P8 of A-6A aircraft.
End W2P2 to MC-2 Adapter Box.

b. Connect adapter cable W3 as follows:

End W3P1 to J9 of KE28 compensator.
End W3J1 to cable P9 of A-6A aircraft.
End W3P2 to connector 1J4 of Console.

c. Apply power to aircraft compass system and perform procedures of paragraph 4-53.c through i.

d. Set MODE SELECTOR to COMP, READOUT SELECT to EXT CX, and rotate HEADING SELECTOR in 15-degree increments. Synchronize MA-1 compass system with its controller and adjust KE28 compensator to obtain zero error on Console readout. Allow sufficient time for slaving signal to reach a null. Record final system readout errors in table F2 of swing data sheet.

e. After compass system is fully compensated, remove all adapter cables and return compass system to its original configuration.

4-56. FORMS. NAVAIR Form 13910/1, Magnetic Compass Calibrator Set Type MC-2 Area Magnetic Survey Data, and NAVA IR Form 13910/2, Magnetic Compass Calibrator Set Type MC-2 Swing Data, are stocked in the Forms anc Publications Segment of the Navy Supply System and may be requisitioned in accordance with NAVSUF Publication 2002.

SECTION V

PERIODIC INSPECTION, MAINTENANCE, AND LUBRICATION

5-1. PERIODIC INSPECTION.

5-2. Inspect Console, Monitor, and Turntable every six months. Perform a visual inspection as directed in table 5-1.

5-3. PERIODIC MAINTENANCE.

5-4. Compass Calibrator preventive maintenance consists of cleaning and inspection for repair or replacement.

5-5. DISASSEMBLY. No disassembly of equipment is required for periodic maintenance except for Console. To disassemble Console, release case lid by turning four locks to open position. Remove lid and eight screws securing panel to case, and remove case. If further disassembly is necessary, remove connectors and screws, and remove angle indicator, angle indicator amplifier, regulator amplifiers, regu - later supplies, and gearcase -motors.

5-6. CLEANING. The following materials are required for cleaning:

a. Compressed air source (not exceeding 25 psig).

b. Soft camelhair brush.

c. Small stiff bristle brush.

d. Lintless wiping cloth.

e. Cleaning solvent (Federal Specification P-D-680, Type II).

f. Trichlorethylene (Military Specification MIL-T-7003).

WARNING

Cleaning solvent and trichlorethylene are flammable. Use only in well-ventilated areas, away from open flames or extreme heat. Avoid prolonged contact or inhalation of vapors.

g. Crocus cloth (Federal Specification P-C-458).

5-7. Clear exterior of Console using a cloth dampened with water. Remove any grease with trichlorethylene. Use compressed air jet and small soft camelhair brush to re:nove any accumulated dirt or dust from interior of C resole and parts. Remove and clean knobs of Console from front panel. Wipe front panel clean with a damp cloth. Touch up front panel markings with flat black lacquer (Federal Specification TT-L-58, Type II; Federal Standard No. 595, Color 37038). Touch up front panel and case as necessary with gloss yellow enamel (Federal Specification TT-L-58, Type II; Federal Standard No. 595, Color 13538).

5-8. Wipe Monitor exterior parts, level, and azimuth scale windows clean with water dampened cloth. Clean telescope lenses with soft camelhair brush. Clean all brass parts with crocus cloth dampened with solvent. Carefully clean or blow out loose dust and accumulated dirt from adjusting mechanisms on transit and below transmitter assembly.

5-9. Clean Turntable and Alignment Equipment in the same manner as Monitor.

5-10. Clean Field Tester in same manner as Monitor.

5-11. Clean Tripoda, Adapter Box, and other equipment using cloth dampened with water. Remove grease and oil with trichlorethylene.

5-12. PERIODIC LUBRICATION.

5-13. Lubricate gearcase-motor gear trains at each periodic inspection. Remove gear train covers and fill valleys between teeth of gears shown in figure 5-1. No other lubrication is required for Compass Calibrator.

TABLE 5-1. INSPECTION PROCEDURES FOR COMPASS CALIBRATOR

Unit	Procedure, Check For:	Remedial Action
Transit Case	Dents, scratches, chips, and defects in case bottom and damaged latches or handles.	Touch up scratches and chips with gloss yellow enamel (Federal Specification TT-L-58, Type II; Federal Standard No. 595, Color 13538. Replace damaged parts.
Console Case	Dents, scratches, chips, damaged latches or handle.	Touch up as necessary with gloss yellow enamel (Federal Specification TT-L-58, Type II; Federal Standard No. 595, Color 13538). Replace damaged parts.
Console Panel Assembly	Dents, scratches, chips, loose or broken knobs, broken lenses, loose switches, loose handles or posts, blown fuses, and burned out lamps.	Touch up as necessary with gloss yellow enamel (Federal Specification TT-L-58, Type II; Federal Standard No. 595, Color 13538). Touch up markings with black lacquer (Federal Specification TT-L-58, Type II; Federal Standard No. 595, Color 37038). Tighten loose parts. Replace broken and damaged parts.
Console	Smooth control action, and normal switch lever action.	Replace de defective controls and switches.
Console Rack Assembly	Remove. Refer to paragraph 5-5. Inspect for broken wires, dirty switch contacts, and defective slide arms on switches.	Replace broken wires. Clean switch contacts. Replace defective switches.
Console Subassemblies (regulator amplifier, angle indicator amplifier, gearcase-motor, and regulator supply)	Damaged connectors, discoloring or blistering of parts, broken or chafed wiring insulation, loose leads or parts, broken wires or connections, mounting security of all parts, and damaged or missing corner isolators.	Replace subassemblies as necessary Replace damaged connectors. Replace corner isolators.
Cable Assemblies	Broken or frayed insulation, cracked or broken connector shells, damaged connector pins, and missing screws.	Replace missing screws. Replace damaged cables.

TABLE 5-1. INSPECTION PROCEDURES FOR COMPASS CALIBRATOR (cont)

Unit	Procedure, Check For:	Remedial Action
Monitor and Case Assembly	Scratches, chips, and bent hinges. Loose adjustment screws, broken or loose lenses, damaged levels, broken connector, stripped screw threads, missing or broken azimuth scale covers, bent or twisted parts, and binding of fine adjustments. Unscrew Monitor from slideboard to inspect connector 1J5.	Touch up as necessary with gloss yellow enamel (Federal Specification TT-L-58, Type II; Federal Standard No. 595, Color 13538). Straighten bent hinges. Tighl en loose screws. Return Monitor to depot for repair and replacement.
Turntable and Case Assembly	Loose or missing adjustment screws, damaged levels, damaged connectors, missing or damaged azimuth scale covers, any bending or twisting and binding of fine adjustments. Unscrew Turntable from slideboard to inspect tonne ctor.	Tighten loose screws. Return Turntable to depot for repair and replacement.
Alignment Equipment	Scratches, chips, broken lenses, stripped screw threads, and binding of fine adjustments.	Touch up as necessary with yellow gloss enamel (Federal Specification TT-L-58, Type If; Federal Standard No. 595, color 13538).
Adapter Box	Scratches, chips, damaged connectors. Remove bottom cover to inspect for fungus, corrosion, secure solder connections, broken wires, and damaged insulation.	Touch up as required with with yellow gloss enamel (Federal Specification TT-L-58, Type II; Federal Standard No. 595, Color 13538). Replace damaged wires, connectors, and insulation. Clear off fungus and corrosion using crocus cloth (Federal Specification P-C-458). Repair solder connections.

TABLE 5-1. INSPECTION PROCEDURES FOR COMPASS CALIBRATOR (cont)

Unit	Procedure, Check For:	Remedial Action
Field Tester	Dents, scratches, chips in case and panel, damaged latches or handles.	Touch up scratches and chips with yellow gloss enamel. (Federal Specificaticm TT-L-58, Type II; Federal Standard No. 595, Color 13538). Replace damaged parts
	Missing or broken knobs, damaged connectors, switchee, controls, and broken wires.	Replace defective parts.
	Mounting security of all parts.	Tighten loose parts.
	Broken or frayed cable insulation, broken connector shells, damaged pins and missing screws, broken lenses in telescope, and damaged swivel joint or screw threads in magnetic azimuth reference detector.	Replace damaged cables. Replace missing screws. Replace telescope or damaged parts.

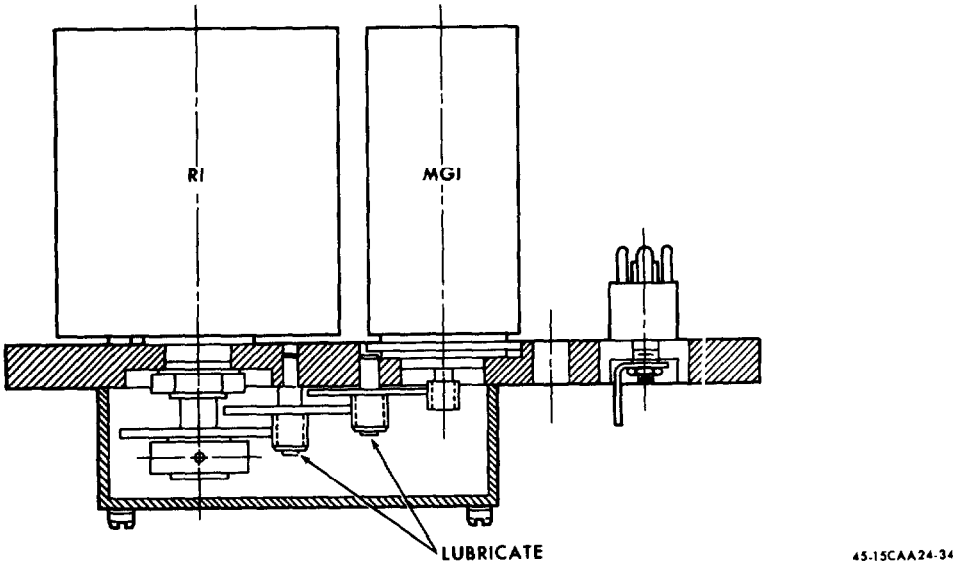

Figure 5-1. Lubrication Points

SECTION VI
TROUBLESHOOTING

6-1. TROUBLESHOOTING.

6-2. System troubleshooting may be facilitated by referring to troubleshooting chart, table 6-1. Chart has been subdivided into three headings: trouble, probable cause, and remedy, and is designed to help maintenance personnel isolate a fault to a particular component or subassembly. only basic malfunctions are listed in table 6-1. A careful preliminary inspection of equipment may help to isolate trouble or give an indication of cause of failure. Before looking for troubles in the system, check operating procedures to make certain suspected trouble is not caused by incorrect operation of unit.

6-3. Console contains eight subassemblies. If Console is suspected of faulty operation during compass swing, refer to troubleshooting chart, table 6-1, to localize trouble. Figure 6-1 illustrates test setup for demagnetization.

6-4. Figures 6-2 through ~~6-10~~ 6-21 are schematic and wiring diagrams for Compass Calibrator.

Note

On the schematic diagrams, wire cross-references read from the bar to the part in the following order: Bar Letter, Destination Reference Designator and Pin Number (if any), and Color Code.

6-5. REPAIR AND REPLACEMENT.

6-6. Repair defective wiring, cables, and connectors on all units and parts. Secure all transistors, capacitors, and other clip-mounted parts to their respective mounting cfips with clear Glyptal (Federal Stock No. 5970-166-8811). Apply clear Glyptal to head of each screw and washer and secure tightly. Use 60/40 rosin core wire solder (Federal Specification QQ-S-571, Type SN60 WRAP 2) for electrical connections.

6-7. Replace electrical wire using stranded electrical wire conforming to Military Specification MIL-W-16878, Type E, 200°C, silver-plated, AWG 22, or equivalent. See applicable wiring diagram for color code and connection ir formation. Replace bus wires with solid wire (Federal Specification QQ-W -343, Type S) soft coated, AWG 22. Use vinyl tubing, Grade C (Military Specification MIL-I-631, TYPe F) when replacing insulation.

6-8. DEMAGNETIZAT [ON. Field Tester demagnetization circuit will remove residual magnetism in a transmitter or monitor sensitive element when the following steps are cor ducted.

a. Connect cable assembly W1 from Console 1J1 to Power Cart or J805 of Power Supply. Connect Field Tester cable assembly W4 end W4P1 to Field Tester connector 5J2 INPUT. Connect Field Tester cable assembly end W4P2 to Console connector 1J4. Connect Field Tester cable assembly end W4P3 to Console connector 1J3. Connect cable assembly of unit to be demagnetized to Field Tester cornnector 5J1 DEMAG. See figure ~~6-4~~ 6-1.

b. Set controls of Console as follows:

E1 NORM. -REV. to OFF.
E2 NORM. -REV. to OFF.
MODE SELECTOR to MON.
POWER ON-OFF switch to POWER ON.

c. Rotate VOLTS ADJUST control on Console to obtain a reading of 23.5 volts on EXC VOLTS meter. Allow 2-minute warm-up period.

d. Set Field Tester switch S1 to DEMAG. and rotate R1 DEMAG. control fully counterclockwise.

e. Rotate Field Tester R1 DEMAG. control slowly to full clockwise position and back to full counterclockwise position. Set Field Tester switch S1 to OFF.

6-9. Perform a four-heading (0, 90, 160, and 270) manual swing to check demagnetized unit. If results are still out of tolerance, replace unit.

TABLE 6-1. TROUBLESHOOTING CHART

Trouble	Probable Cause	Remedy
Power indicator not lighted when POWER ON-OFF switch is in POWER ON.	Burned out fuse 1F1, 1F2 (22, figure 9-12). Burned out lamp 1DS1 (5). Faulty power cable W1 (figure 9-4). Faulty POWER ON-OFF switch 1S7 (21, figure 9-12).	Perform power test of table 7-2, step 1, part I.
With MODE SELECTOR switch in CAL MON or IND position and POWER ON-OFF switch ON, no power is indicated on EXC VOLTS meter.	Faulty voltmeter 1M1 (18, figure 9-12). Faulty variable power transformer 1T1 (20). Faulty ground on voltmeter 1M1 (18) or variable power transformer 1T1 (20). Faulty MODE SELECTOR switch 1S8 (15). Faulty angle indicator amplifier 1A7 (20, figure 9-7).	Perform power test of table 7-2, step 1, part II. Check for 23.5 volts at 1P7-W.
HEADING and ERROR readout does not follow Monitor when Monitor is rotated, with MODE SELECTOR in MON position.	Monitor and Console not properly interconnected. Faulty monitor cable W3 (figure 9-4). No excitation voltage to Monitor. Faulty MODE SELECTOR switch 1S8 (15, figure 9-12), Faulty Monitor. Faulty angle indicator amplifier 1A7 (20, figure 9-7). Faulty angle indicator 1A8 (36, figure 9-12).	Check that Monitor cable W2 is connected to MON connector. Substitute cable W2. If trouble is corrected, replace cable W3. Perform power test of table 7-2, step 1, part II. Replace Monitor. Check for normal operation in next step.
Readout does not follow transmitter heading while Turntable is rotated with MODE SELECTOR in CAL position.	Defective transmitter. Transmitted: not connected to TRANS connector on Console. (Continued)	Replace transmitter. Check that cable W2 is connected to Turntable and TRANS connector on Console. (Continued)

TABLE 6-1. TROUBLESHOOTING CHART (cont)

Trouble	Probable Cause	Remedy
	Faulty TRANS cable W2 (figure 9-4).	Substitute cable W3. If trouble is corrected, replace cable W2.
	No excitation voltage to transmitter.	Perform power test of table 7-2, step 1, part II.
	Faulty MODE SELECTOR switch 1S8 (15, figure 9-12).	
	Faulty quick connector (11, figure 9-16).	Check quick connector for proper cornnection and for broken wires.
	Faulty angle indicator amplifier 1A7 (20, figure 9-7).	Replace angle indicator amplifier.
	Faulty angle indicator 1A8 (36, figure 9-12).	Replce angle indicator.
E1 voltage cannot be adjusted to null NULL INDICATOR with Turntable on headings of 0 and 180 degrees.	F lead to transmitter open.	Replace transmitter and check inter connecting cables.
	E1 power supply subassemblies shorted to chassis ground.	Perform E1 voltage range test of table 7-2, step 3.
	Faulty El regulator amplifier 1A1 (18, figure 9-7, E1 gearcase-motor (17), or E1 regulator supply (16).	
	Faulty E1 voltage controls 1R3, 1AT4, 1AT2 (12, 11, 10, figure 9-12) or El switch 1S1 (9).	Replace control or switch.
	Faulty variable power transformer 1T1 (20, figure 9-12).	
	Faulty MODE SELECTOR switch 1S8 (15).	
	Faulty POWER ON-OFF switch 1S7 (21).	
	Faulty HEADING SELECTOR switch 1AT1 (34).	
E2 voltage cannot be adjusted to null NULL INDICATOR with Turntable on headings of 90 and 270 degrees.	E2 power supply subassemblies shorted to chassis ground.	Perform voltage range test of tabk 7-2, step 4.
	Faulty E2 regulator amplifier 1A2 (18, figure 9-7), E2 gearcase-motor (17), or E2 regulator supply (16).	Perform power test of table 7-2, step 1, part II.
	(Continued)	(Continued)

TABLE 6-1. TROUBLESHOOTING CHART (cent)

Trouble	Probable Cause	Remedy
	Faulty E2 voltage controls 1R4, 1AT5, 1AT3 (12, 11, 10, figure 9-12). Faulty variable power transformer 1T1 (20).	
	Faulty MODE SELECTOR switch 1S8 (15).	
	Faulty HEADING SELECTOR switch 1AT1 (34).	Replace switch.
E1 CHECK variable resistor cannot be adjusted to null NULL INDICATOR when MODE SELECTOR is in MON position.	Faulty E1-E2 CHECK switch 1S3 (6, figure 9-12) or El CHECK variable resistor 1R5 (8).	Replace switch or resistor.
	Faulty Monitor.	Replace Monitor.
	Faulty HEADING SELECTOR switch 1AT1 (34).	Replace switch.
	Faulty 1R1 resistor.	Replace resistor.
	Faulty MODE SELECTOR switch 1S8 (15).	Perform power test of table 7-2, step 1, part III.
	Faulty FV SELECT switch 1S10 (31).	Replace switch.
E2 CHECK cannot be adjusted to null NULL INDICATOR when MODE SELECTOR is in MON position.	Faulty E1-E2 CHECK switch 1S3 (6, figure 9-12) or E2 CHECK variable resistor 1R6 (8).	Replace switch or resistor.
	Faulty HEADING SELECTOR switch 1AT1 (34).	Replace switch.
	Faulty MODE SELECTOR switch 1S8 (15).	Perform power test of table 7-2, step 1, part III.
With Turntable and HEADING SELECTOR at 0, synchro heading does not change when MISAL is set in.	Faulty MISAL polarity switch 1S6 (1, figure 9-12).	Perform MISAL circuit test of table 7-3, step I.
	Faulty MISAL MINUTES switch 1AT6 (14).	
With Turntable at 0 and HEADING SELECTOR at 180, synchro heading does not change when Δ180 is set in.	Faulty Δ180polarity switch 1S4	Perform Δ180 circuit test of table
	Faulty Δ180MINUTES switch 1AT8 (4).	
	Faulty HEADING SELECTOR switch 1AT1 (34).	Replace switch.

TABLE 6-1. TROUBLESHOOTING CHART (cont)

Trouble	Probable Cause	Remedy
With Turntable at 0 and HEADING SELECTOR at 90, synchro heading does not change when Δ270 is set in.	Faulty Δ270 polarity switch 1S5 (1, figure 9-12). Faulty Δ270 MINUTES switch 1AT7 (3). Faulty HEADING SELECTOR switch 1AT1 (34).	Perfornm Δ270 circuit test of table 7-3, step 2. Replace switch.
When determining Δ270, electrical swing error minus corrected manual error at 90 degrees does not equal electrical swing error minus corrected manual error at 270 degrees within 9 minutes.	E1 is not properly calibrated.	Recalibrate. Refer to paragraphs 4-44 through 4-50 of the operating procedure.
With transmitter in aircraft, compass headings do not follow HEADING SELECTOR headings.	Crossed, shorted, or open leads in aircraft transmitter wiring. Crossed, shorted, or open leads in adapter cable, adapter box or cable W2. Aircraft compass system not operating properly. Faulty MODE SELECTOR switch 1S8 (15, figure 9-12).	Check aircraft transmitter wiring. Check for faulty wiring in adapter box, adapter cable, and cable W2. Check aircraft compass system: refer tc applicable aircraft maintenance manual. Perform power test of table 7-2, step 1, part III.
With transmitter in aircraft, a large heading error is observed on two headings. All other headings are normal.	Faulty resistor in E 1 voltage section of HEADING SELECTOR switch 1AT1 (34, figure 9-12).	Replace resistor.
With transmitter in aircraft, a large heading error is observed on four headings. All other headings are normal.	Faulty resistor in E2 voltage section of HEADING SELECTOR switch 1S8 (15, figure 9-12).	Replace resistor.
During an electrical-manual swing operational check, an index error is observed with a maximum error at 90 and 270 degrees.	Faulty Δ270 polarity switch 1S5 (1, figure 9-12). Faulty Δ270 MINUTES switch 1AT7 (3). Faulty Δ270 section of HEADING SELECTOR switch 1AT1 (34). Monitor magnetized.	Perform Δ270 circuit test of table 7-3, step 2. Replace switch.

TABLE 6-1. TROUBLESHOOTING CHART (cont)

Trouble	Probable Cause	Remedy
During an electrical-manual swing operational check, an N-S one-cycle error which is maximum on 0 and 180 degrees is observed.	Faulty MISAL polarity switch 1S6 (1, figure 9-12).	Perform MISAL circuit test of table 7-3, step 1.
	Faulty MISAL MINUTES switch 1AT6 (14).	
	Monitor magnetized.	Perform demagnetization procedure, paragraph 6-8.
During an electrical-manual swing operational check, an N-S one-cycle error which appears maximum at 180 but not at 0 degrees is observed.	Faulty Δ180 polarity switch 1S4 (1, figure 9-12).	Perform Δ180 circuit test of table 7-3, step 3.
	Faulty Δ180 MINUTES switch 1AT8 (4).	
	Faulty Δ180 section of HEADING SELECTOR switch 1AT1 (34).	Replace switch.
During an electrical-manual swing operational check, an E-W one-cycle error appears at 90 and 270 degrees but maximum errors appear at 165 and 195 degrees.	E1 voltage regulation not functioning properly.	Perform E 1 regulation tests of table 7-2, steps 5 and 6.
	Faulty HEADING SELECTOR switch 1AT1 (34, figure 9-12).	Replace switch.
During an electrical-manual swing operational check, a two-cycle error is observed.	E2 voltage regulation not functioning properly.	Perform E2 regulation tests of table 7-2, steps 5 and 6.
	Faulty HEADING SELECTOR switch 1AT1 (34, figure 9-12).	Replace switch.
During an electrical-manual swing operational check, an error appears at only two or four headings.	Faulty HEADING SELECTOR switch 1AT1 (34, figure 9-12).	Replace switch.
No sensitivity of Console angle indicator when determining control transformer index error using Field Tester, although in normal operation angle indicator seems normal.	No excitation to valve assembly in Field Tester shield can assembly due to:	
	Defective switch S1.	Replace switch.
	Defective wiring.	Replace wire as necessary.
	Open excitation winding of valve assembly.	Replace valve assembly.
	No magnetic field in Field Tester shield can assembly due to:	
	No d-c voltage.	Check E1 voltage setting on Console.

TABLE 6-1. TROUBLESHOOTING CHART (cont)

Trouble	Probable Cause	Remedy
	Defective resistor R2.	Replace resistor.
	Defective switch S1.	Replace switch.
	Defective wiring.	Replace wire as necessary.
	Open legs in valve assembly.	Replace valve assembly.
Large errors at one or more headings when determining control transformer index error, using Field Tester.	Switch S1 defective.	Replace switch.
	Open or shorted legs in Field Tester valve assembly.	Replace valve assembly.
	Defective Field Tester wiring.	Replace wires as necessary.
	Valve assembly not centered in shield can assembly of Field Tester.	Reposition valve assembly and replace spacers as necessary.
Low sensitivity, using magnetic azimuth reference detector in Field Tester.	Defective Field Tester.	Replace wiring as necessary.
	Defective valve assembly in magnetic azimuth reference detector of Field Tester.	Replace valve assembly in magnetic reference detector.
Errors exceed 5 degrees at one or more headings of Field Tester magnetic azimuth reference detector.	Defective Field Tester wiring.	Replace wiring as necessary.
	Defective magnetic azimuth reference detector valve assembly.	Replace valve assembly.
	Magnetic azimuth reference detector valve assembly not level.	Level valve assembly.
	Magnetic azimuth reference detector valve assembly magnetized.	Demagnetize magnetic azimuth reference detector valve assembly by collecting cable assembly P3 to 5J1 of Field Tester.
Multimeter does not indicate on one or more positions when checking E1 and E2 voltage range and regulation, using Field Tester.	Defective Field Tester switch S2.	Replace switch.
	Defective Field Tester wiring	Replace wire as necessary.
Multimeter shows no momentary change as Field Tester switch S3 is set to E1 or E2 positions,	Defective Field Tester resistor R1 or R5.	Replace resistor, switch, or wiring.
	Defective Field Tester switch S3.	
	Defective Field Tester wiring.	

TABLE 6-1. TROUBLESROOTING CHART (cont)

Trouble	Probable Cause	Remedy
DEMAG circuit not functioning properly when using Field Tester for demagnetization. *	Defective Field Tester resistor R3. Defective Field Tester switch S1. Defective Field Tester variable resistor R1. Defective Field Tester wiring.	Replace res resistor, switch, or wiring.
*Flux valve or valve assembly may appear to be magnetized when it is not properly leveled or calibrated.		

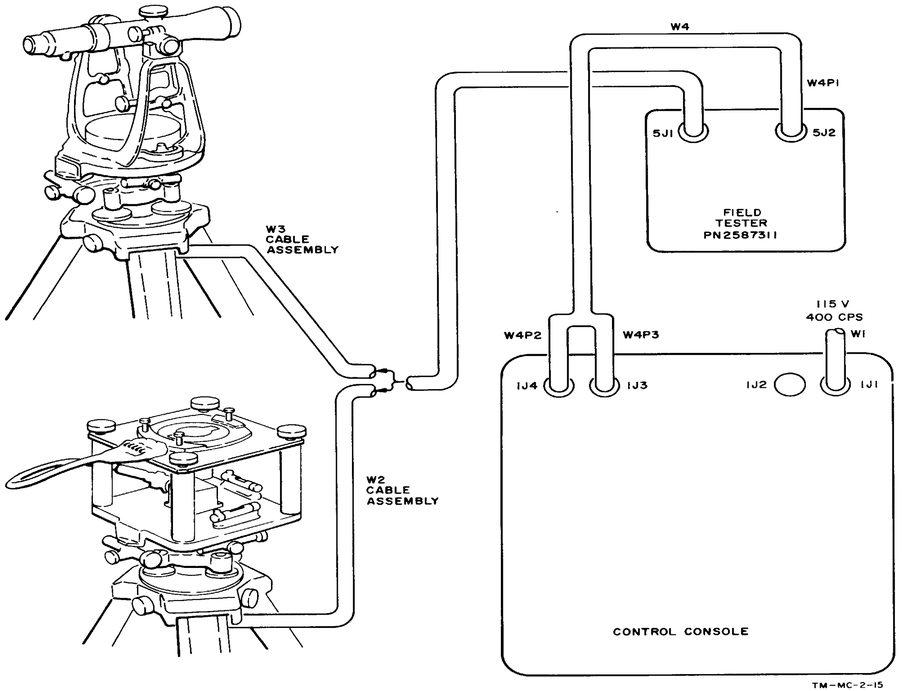

Figure 6-1. Test Setup for Demagnetization

Z101 HEADING SELECTOR		
POS	FUNCTION	
1	15	DEGREES
2	30	
3	45	
4	60	
5	75	
6	90	
7	105	
8	120	
9	135	
10	150	
11	165	
12	180	DEGREES

Z101 (CONT)		
POS	FUNCTION	
13	195	DEGREES
14	210	
15	225	
16	240	
17	255	
18	270	
19	285	
20	300	
21	315	
22	330	
23	345	
24	360	DEGREES

Z102 AND Z103 E1 AND E2, 10-VOLT		
POS	FUNCTION	
1	5	VOLTS
2	10	
3	20	
4	30	
5	40	
6	50	
7	60	
8	70	
9	80	
10	90	VOLTS

Z104 AND Z105 E1 AND E2, 1-VOLT		
POS	FUNCTION	
1	0	VOLTS
2	1	
3	2	
4	3	
5	4	
6	5	
7	6	
8	7	
9	8	
10	9	
11	10	VOLTS

Z107 Δ270 AND Z108 Δ180		
POS	FUNCTION	
1	0	MINUTES
2	3	
3	6	
4	9	
5	12	
6	15	
7	18	
8	21	
9	24	
10	27	
11	30	
12	33	
13	36	
14	39	
15	42	
16	45	
17	48	
18	51	
19	54	
20	57	
21	60	MINUTES

Z106 MISAL SWITCH					
POS	FUNCTION		POS	FUNCTION	
1	0	MINUTES	22	63	MINUTES
2	3		23	66	
3	6		24	69	
4	9		25	72	
5	12		26	75	
6	15		27	78	
7	18		28	81	
8	21		29	84	
9	24		30	87	
10	27		31	90	
11	30		32	93	
12	33		33	96	
13	36		34	99	
14	39		35	102	
15	42		36	105	
16	45		37	108	
17	48		38	111	
18	51		39	114	
19	54		40	117	
20	57	MINUTES	41	120	MINUTES
21	60	MINUTES			

NOTES:

1. ALL VALUES EXPRESSED IN OHMS, HENRYS, AND MICROFARADS UNLESS OTHERWISE SPECIFIED.
2. A ⏚ INDICATES GROUNDS TERMINATED AT ONE POINT.
3. B ⏚ INDICATES GROUNDS CONNECTED TO CHASSIS AT ONE POINT.
4. S INDICATES COMMON SIGNAL GROUND CONNECTIONS.
5. P INDICATES COMMON POWER GROUND CONNECTIONS.
6. SWITCHES ARE VIEWED FROM SHAFT END UNLESS OTHERWISE SPECIFIED.
7. ▭ DESIGNATES FRONT PANEL NOMENCLATURE.
8. (1) C6 AND C20 SELECTED FROM 0.010 TO 0.039.
9. (2) R2 SELECTED FROM 1000, 1500, 2400, 5100, AND 8200.
10. (3) C5 SELECTED FROM 0.0015 TO 0.0068.
11. (4) DIODE CONFIGURATION FOR P/N 2587177.
12. (5) DIODE CONFIGURATION FOR P/N 2588219.
13. (6) USED ON CONSOLE P/N 2588219 ONLY.
14. (7) DASHED LINES INDICATE ALTERNATE SCHEMATIC CONNECTIONS FOR CONSOLE P/N 2588219.

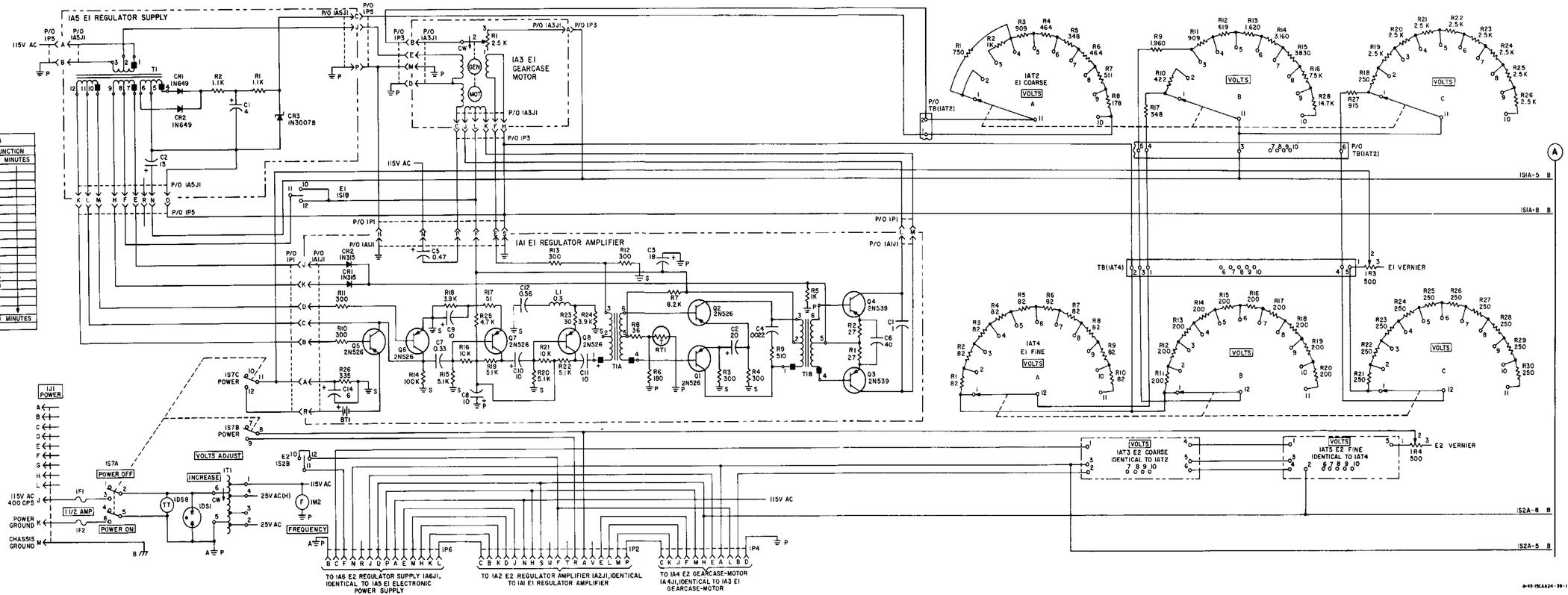

Figure 6-2. Console Schematic Diagram (Sheet 1)
Part No. 2587177 and 2588219

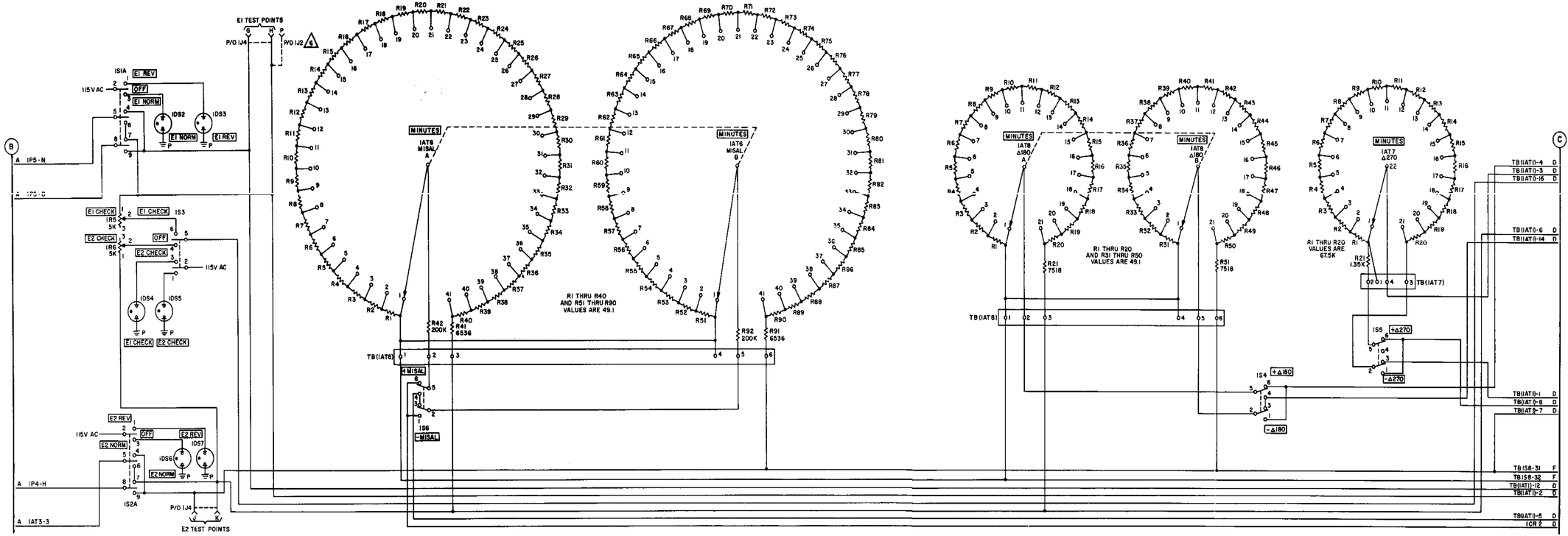

Figure 6-2. Console Schematic Diagram (Sheet 2)
Part No. 2587177 and 2588219.

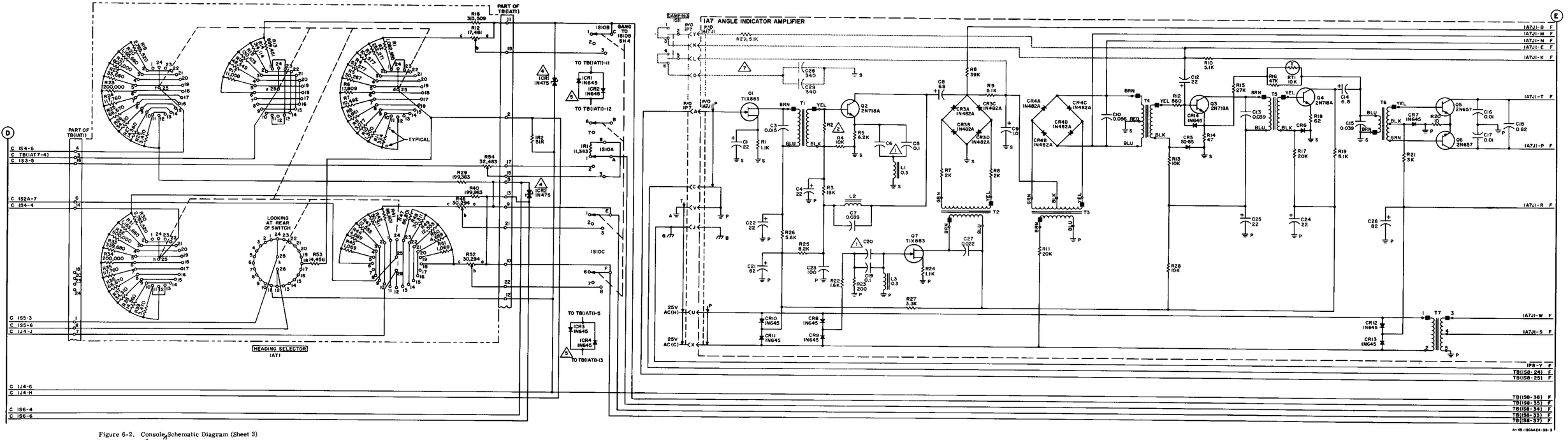

Figure 6-2. Console Schematic Diagram (Sheet 3)

(Part No. 2587179 and 2588219)

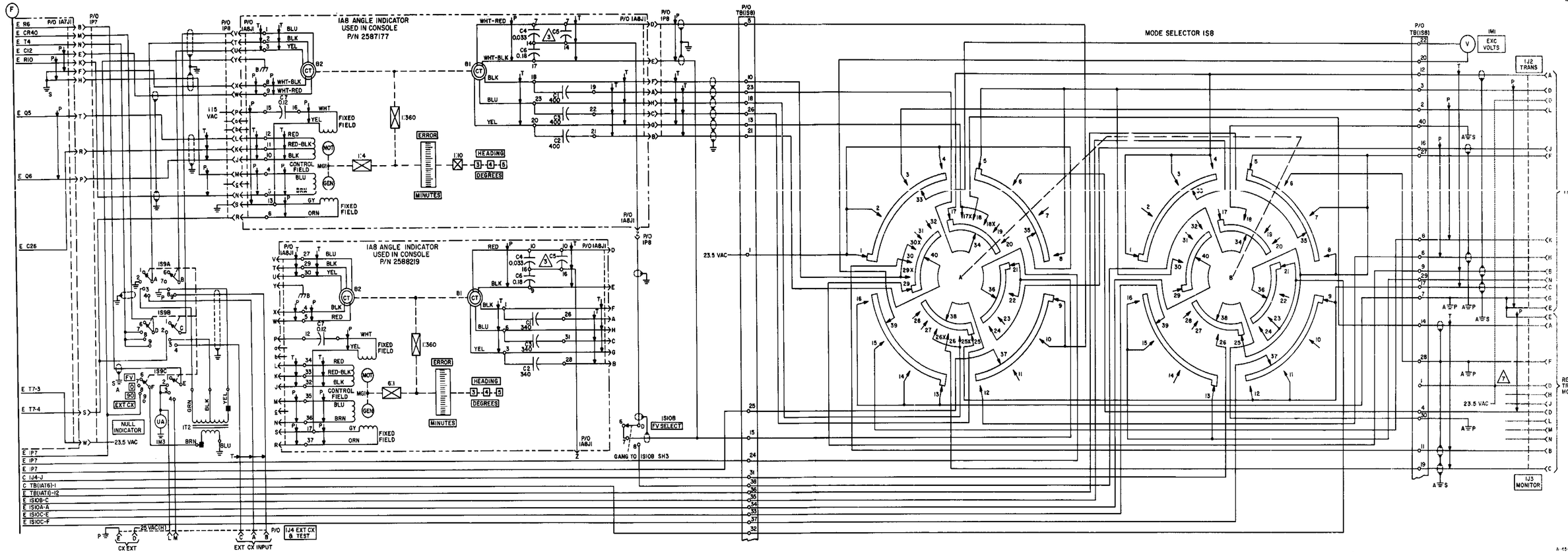

Figure 6-2. Console Schematic Diagram (Sheet 4)
(Part No. 2587177 and 2588219)

Z101 HEADING SELECTOR		
POS	FUNCTION	
1	15	DEGREES
2	30	
3	45	
4	60	
5	75	
6	90	
7	105	
8	120	
9	135	
10	150	
11	165	
12	180	DEGREES

Z101 (CONT)		
POS	FUNCTION	
13	195	DEGREES
14	210	
15	225	
16	240	
17	255	
18	270	
19	285	
20	300	
21	315	
22	330	
23	345	
24	360	DEGREES

Z102 AND Z103		
E1 AND E2, 10-VOLT		
POS	FUNCTION	
1	5	VOLTS
2	10	
3	20	
4	30	
5	40	
6	50	
7	60	
8	70	
9	80	
10	90	VOLTS

Z104 AND Z105		
E1 AND E2, 1-VOLT		
POS	FUNCTION	
1	0	VOLTS
2	1	
3	2	
4	3	
5	4	
6	5	
7	6	
8	7	
9	8	
10	9	
11	10	VOLTS

Z107 Δ 270 AND Z108 Δ 180		
POS	FUNCTION	
1	0	MINUTES
2	3	
3	6	
4	9	
5	12	
6	15	
7	18	
8	21	
9	24	
10	27	
11	30	
12	33	
13	36	
14	39	
15	42	
16	45	
17	48	
18	51	
19	54	
20	57	
21	60	MINUTES

Z106 MISAL SWITCH					
POS	FUNCTION		POS	FUNCTION	
1	0	MINUTES	22	63	MINUTES
2	3		23	66	
3	6		24	69	
4	9		25	72	
5	12		26	75	
6	15		27	78	
7	18		28	81	
8	21		29	84	
9	24		30	87	
10	27		31	90	
11	30		32	93	
12	33		33	96	
13	36		34	99	
14	39		35	102	
15	42		36	105	
16	45		37	108	
17	48		38	111	
18	51		39	114	
19	54		40	117	
20	57		41	120	MINUTES
21	60	MINUTES			

NOTES:

1. ALL VALUES EXPRESSED IN OHMS, HENRYS, AND MICROFARADS UNLESS OTHERWISE SPECIFIED.
2. A ⏚ INDICATES GROUNDS TERMINATED AT ONE POINT.
3. B ⏚ INDICATES GROUNDS CONNECTED TO CHASSIS AT ONE POINT.
4. S INDICATES COMMON SIGNAL GROUND CONNECTIONS.
5. P INDICATES COMMON POWER GROUND CONNECTIONS.
6. SWITCHES ARE VIEWED FROM SHAFT END UNLESS OTHERWISE SPECIFIED.
7. ▭ DESIGNATES FRONT PANEL NOMENCLATURE.
8. △1 C6 AND C20 SELECTED FROM 0.010 TO 0.039.
9. △2 R2 SELECTED FROM 56 TO 120
10. △3 C5 SELECTED FROM 0.0015 TO 0.0068.

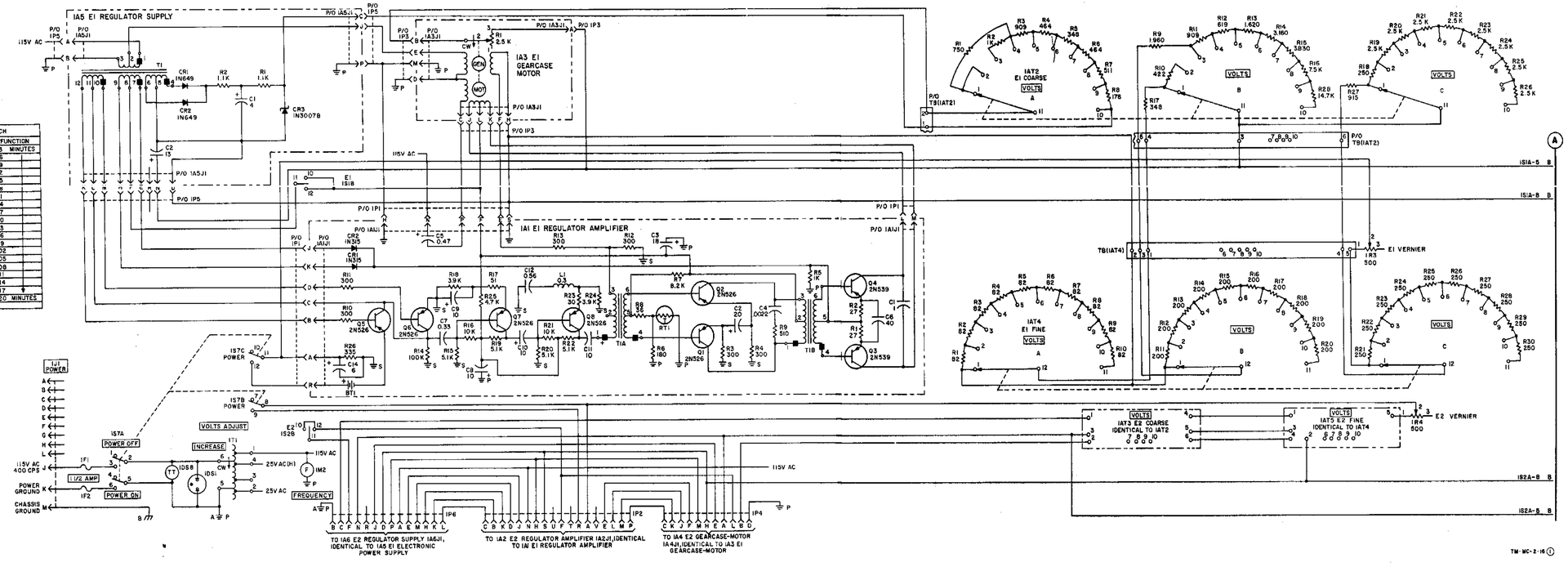

Figure 6-2A. Console, Part No. 2591798, Schematic Diagram (Sheet 1 of 4) (2)

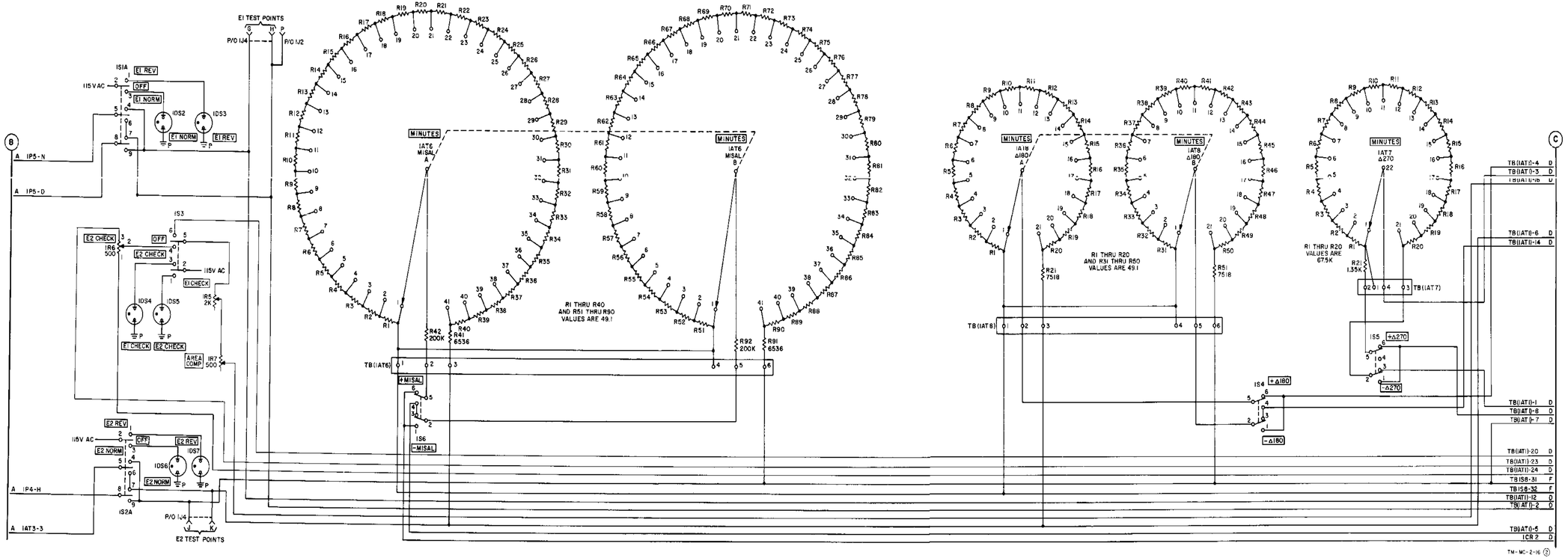

Figure 6-2A. Console, Part No. 2591798, Schematic Diagram (Sheet 2 of 4)

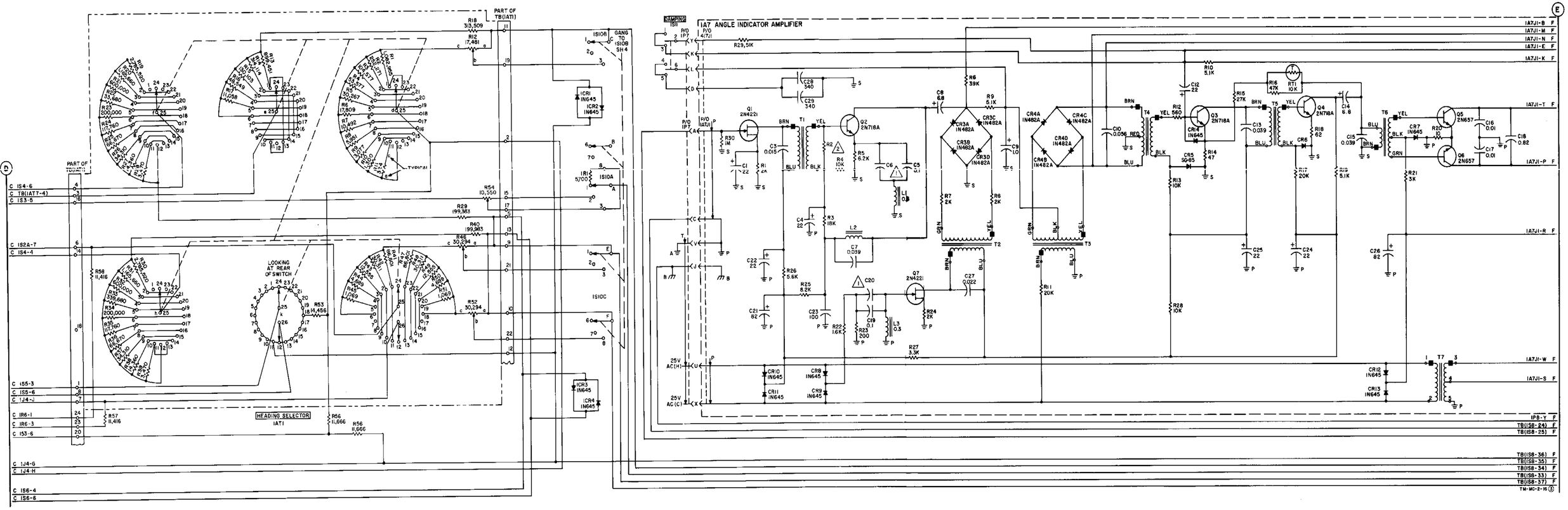

Figure 6-2A. Console, Part No. 2591798, Schematic Diagram (Sheet 3 of 4)

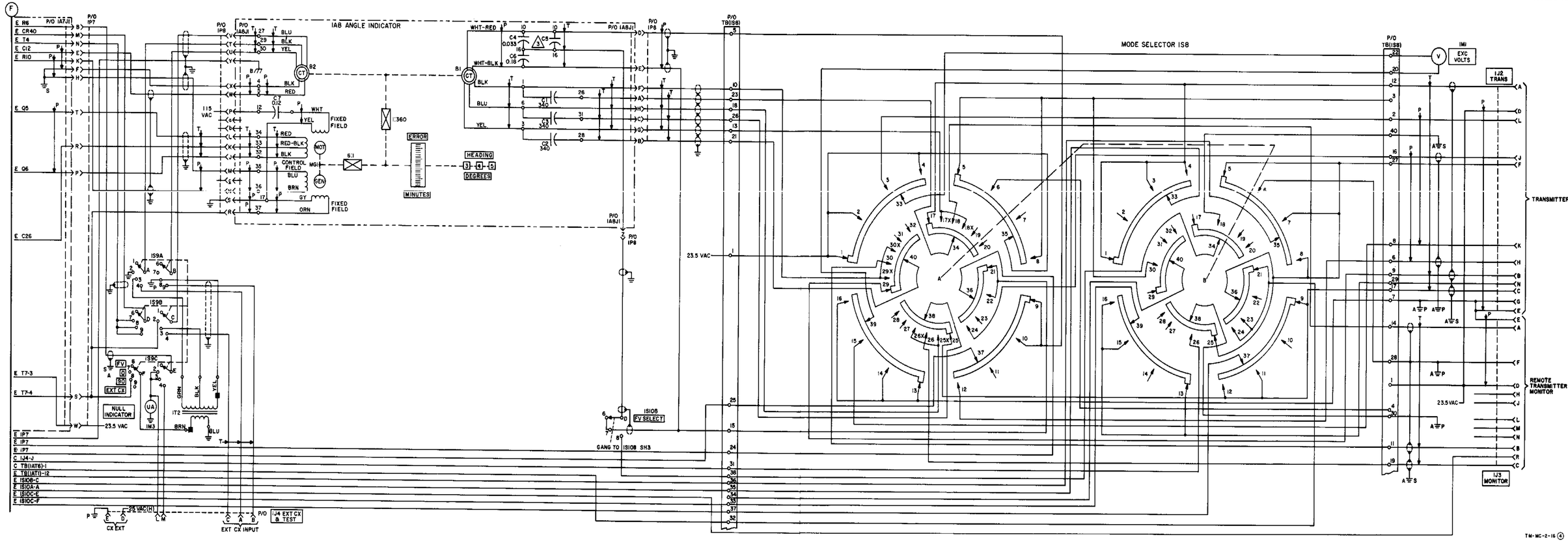

Figure 6-2A. Console, Part No. 2591798, Schematic Diagram (Sheet 4 of 4)

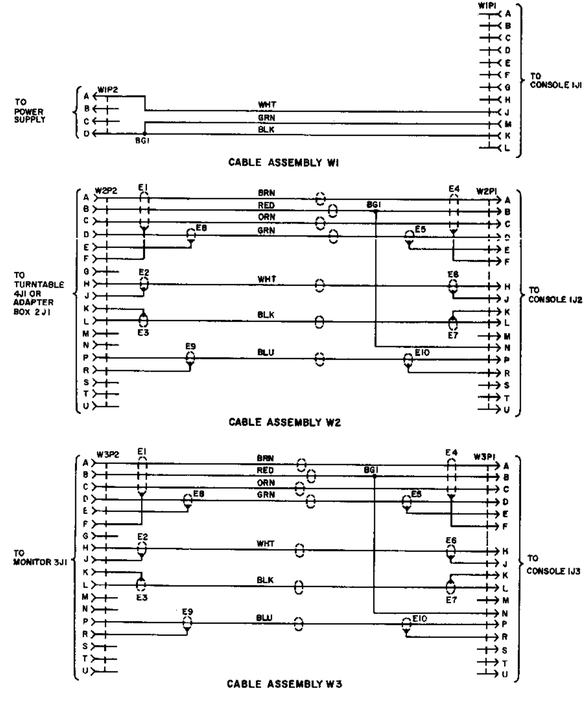

Figure 6-3. Interconnecting Cable Schematic Diagrams
for Part No. 2592080-2, -4, and -5

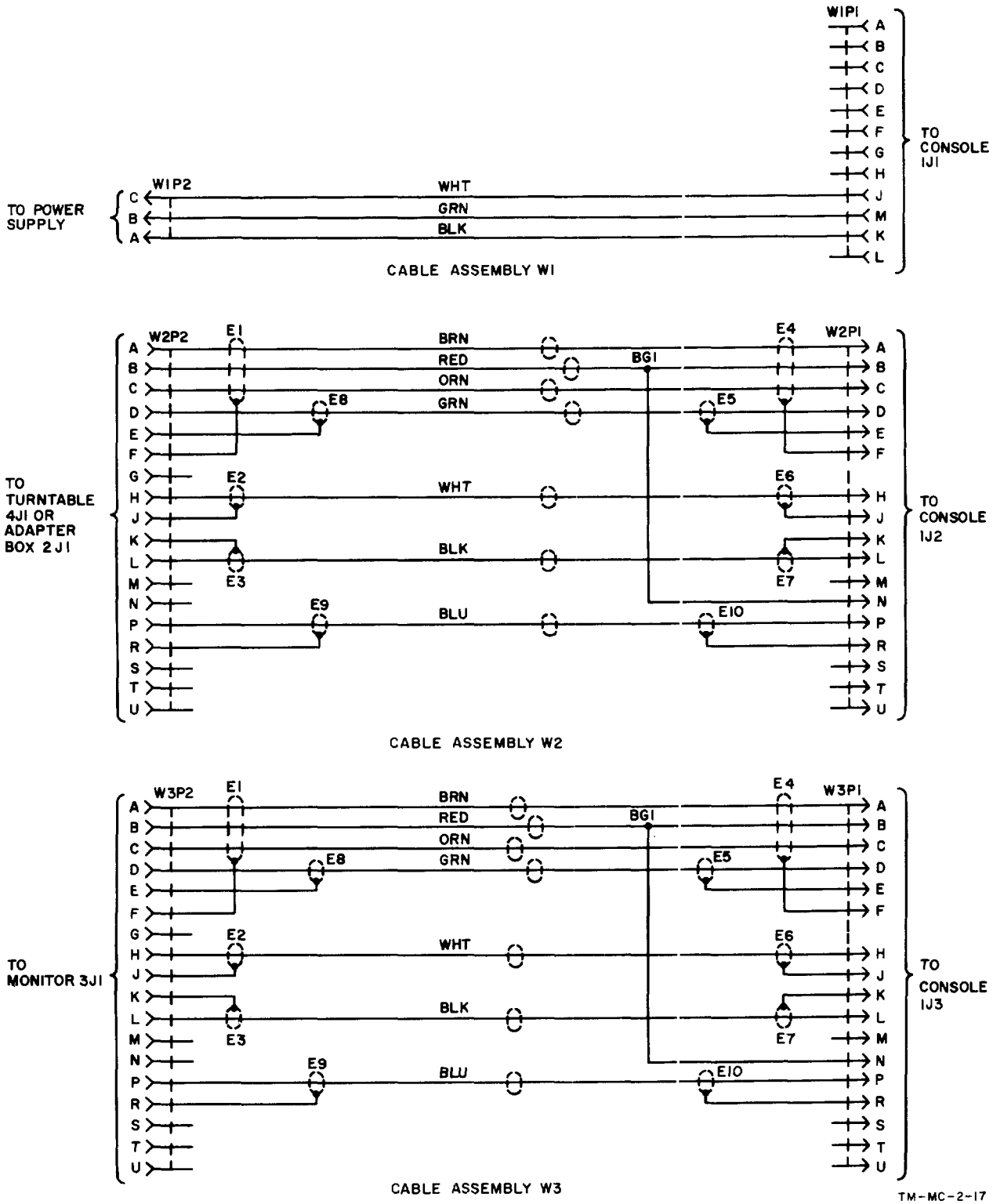

Figure 6-3A. Interconnecting Cable Schematic Diagrams For Part No. 2592080-8

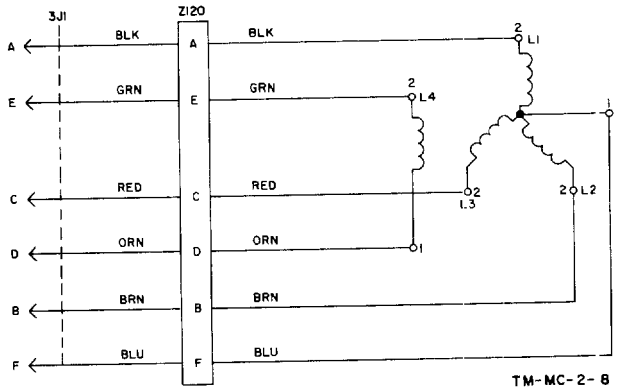

Figure 6-4. Monitor, Part No. 2588224 and 2587133, Schematic Diagram

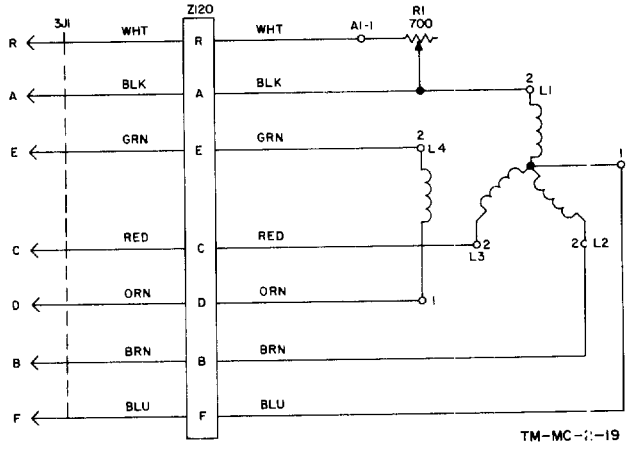

Figure 6-4A. Monitor, Part No. 2591799, Schematic Diagram

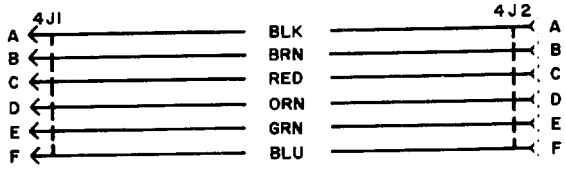

Figure 6-5. Turntable Schematic Diagram

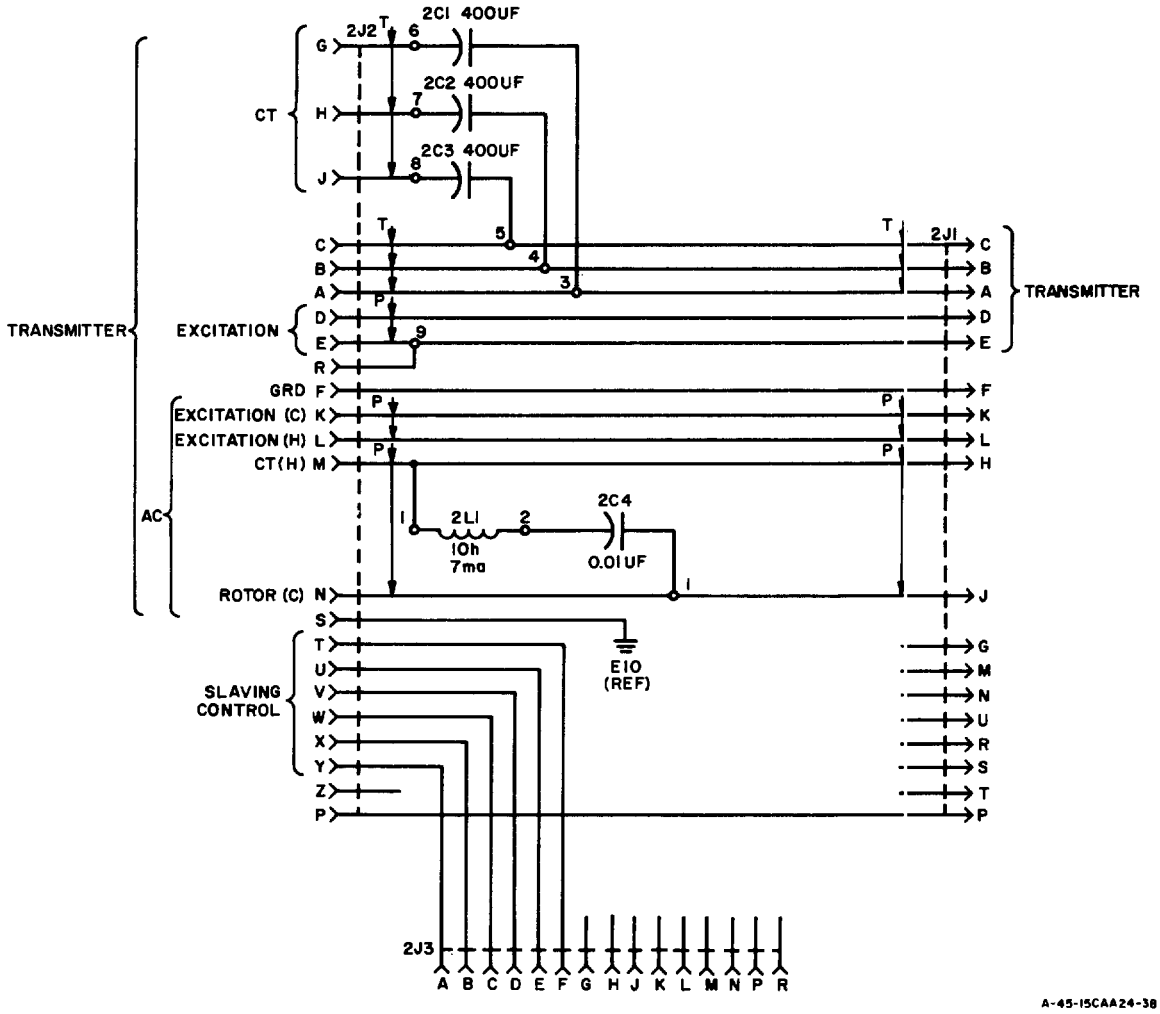

Figure 6-6. Adapter Box Schematic Diagram

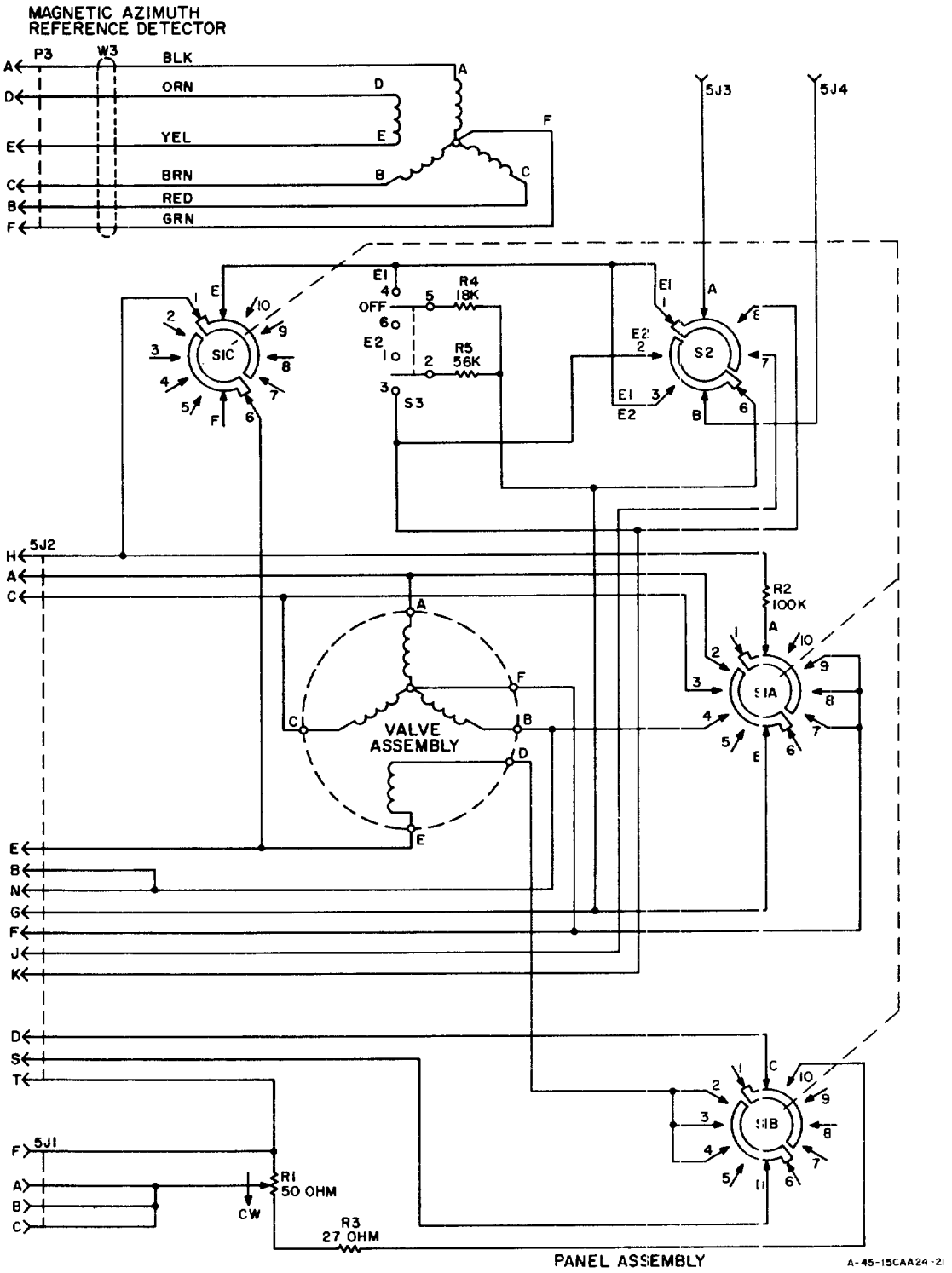

Figure 6-7. Field Tester Schematic Diagram

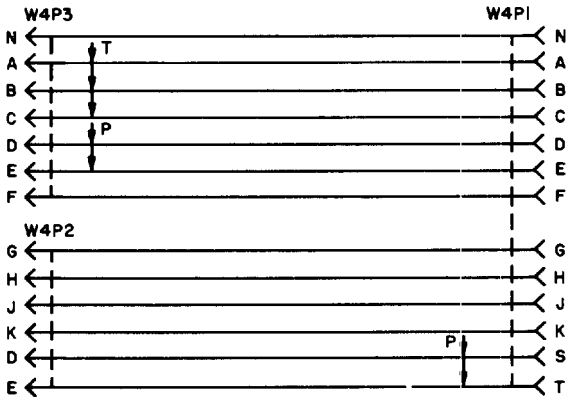

Figure 6-8. Field Tester Adapter Cable Schematic Diagram

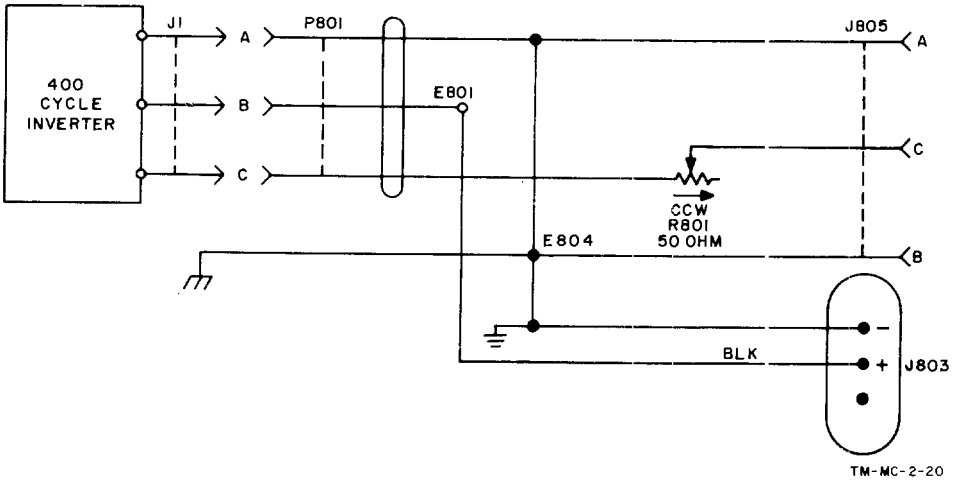

Figure 6-8A. Power Supply Schematic Diagram

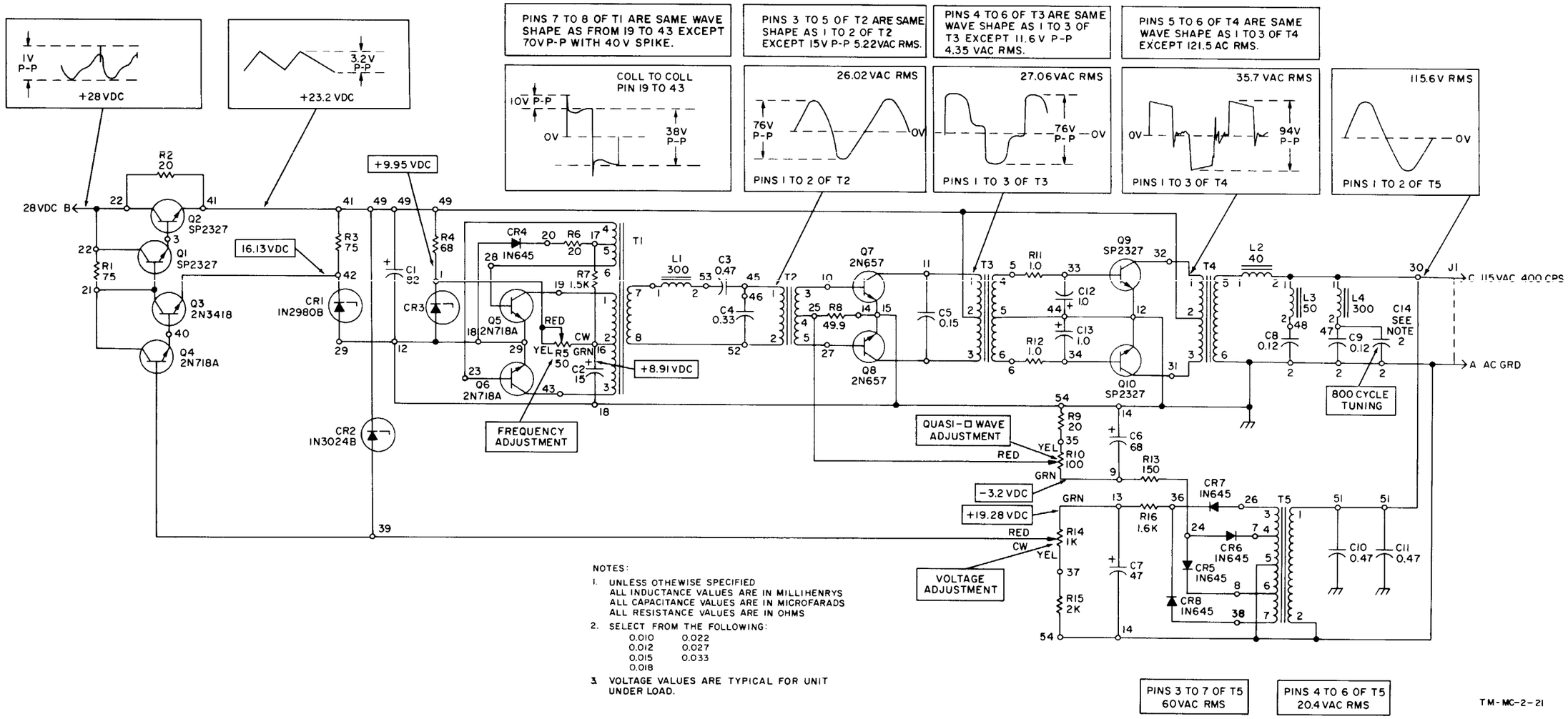

NOTES:

1. UNLESS OTHEWISE SPECIFIED
   ALL INDUCTANCE VALUES ARE IN MILLIHENRYS
   ALL CAPACITANCE VALUES ARE IN MICROFARADS
   ALL RESISTANCE VALUES ARE IN OHMS
2. SELECT FROM THE FOLLOWING:

0.010	0.022
0.012	0.027
0.015	0.033
0.018	

3. VOLTAGE VALUES ARE TYPICAL FOR UNIT UNDER LOAD.

Figure **6-8B. Inverter Schematic Diagram** ①

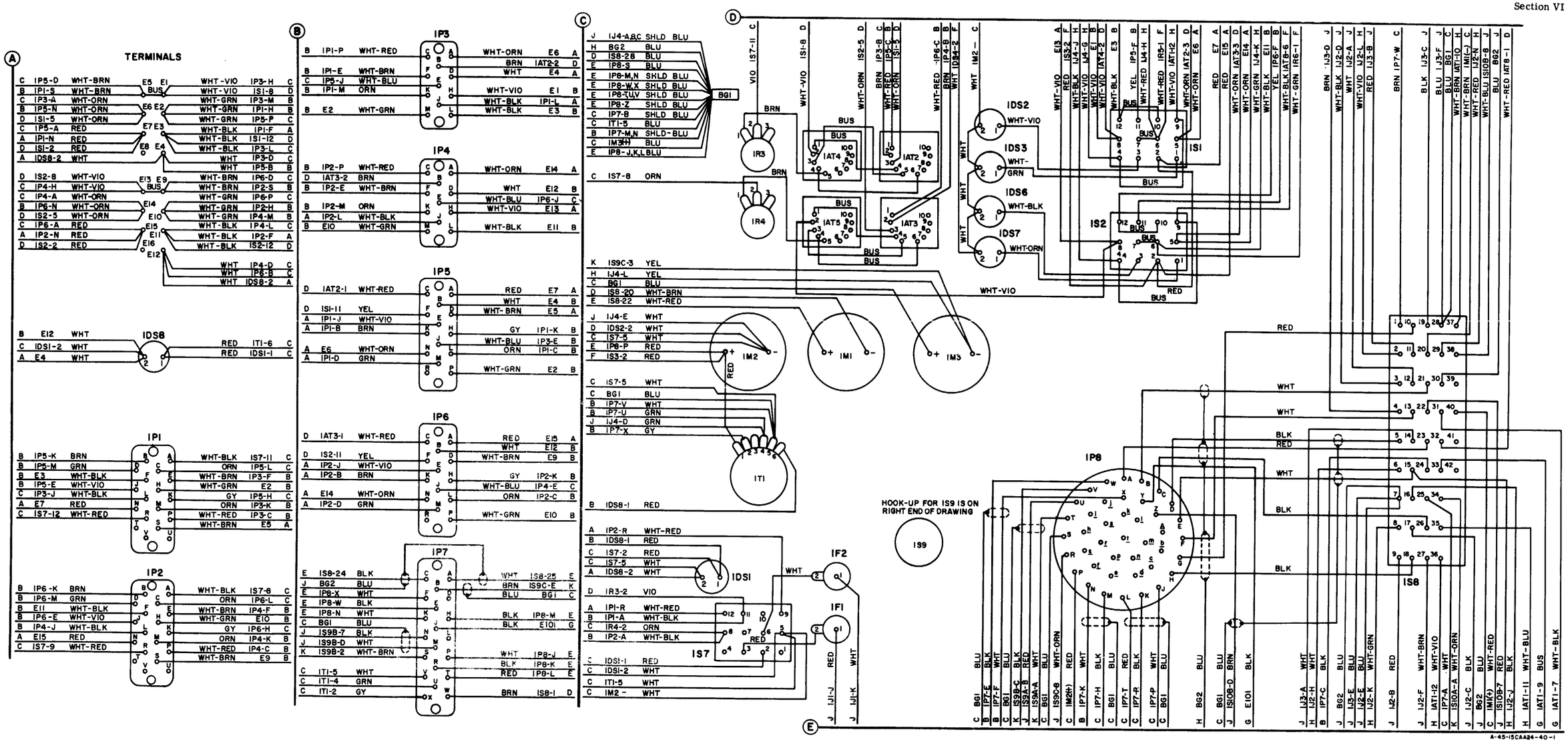

Figure 6-9. Wiring Diagram for Console, Part No. 2587177 (Sheet 1)

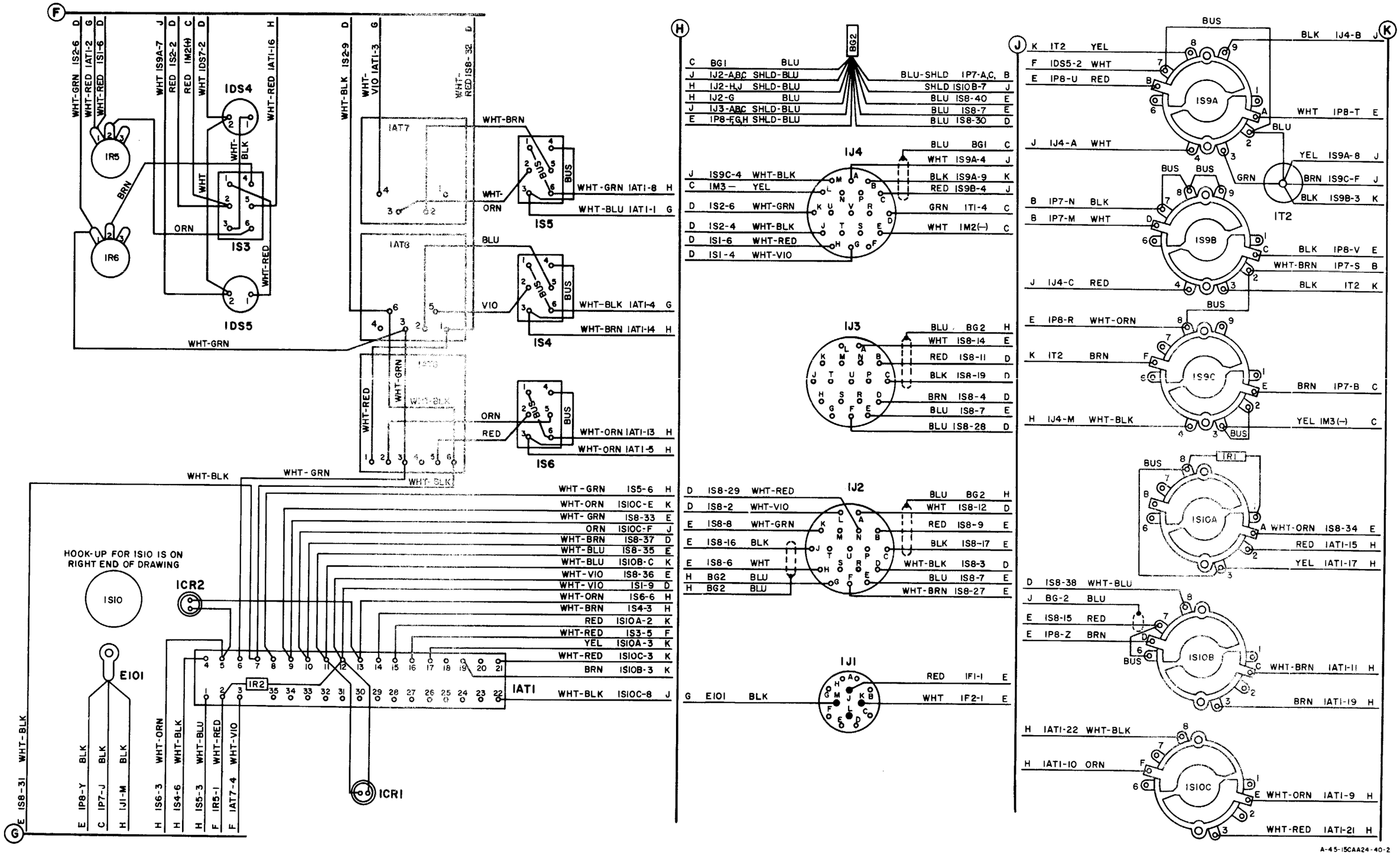

Figure 6-9. Wiring Diagram for Console, Part No. 2587177 (Sheet 2)

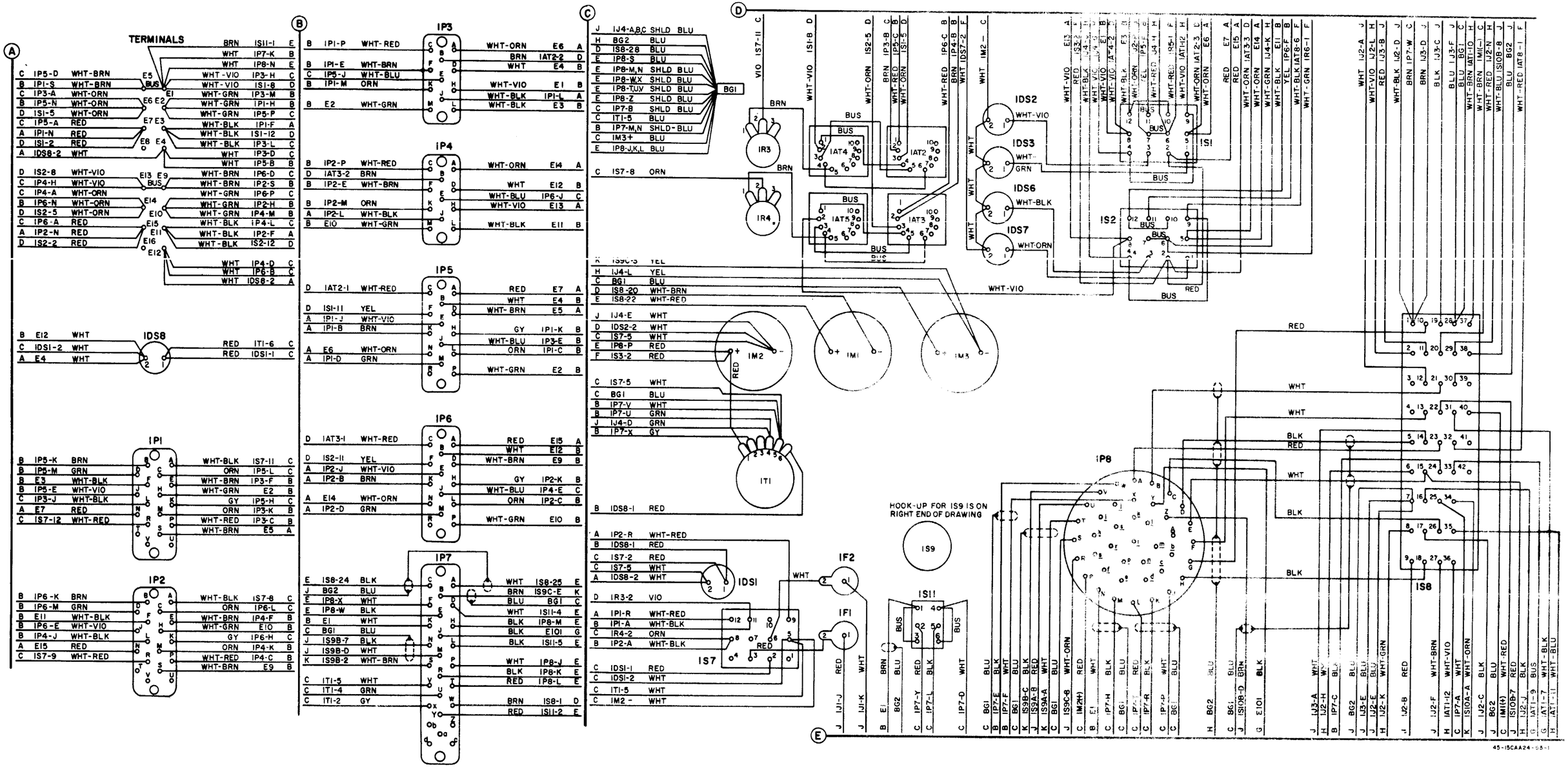

Figure 6-10. Wiring Diagram for Console, Part No. 2588219 (Sheet 1)

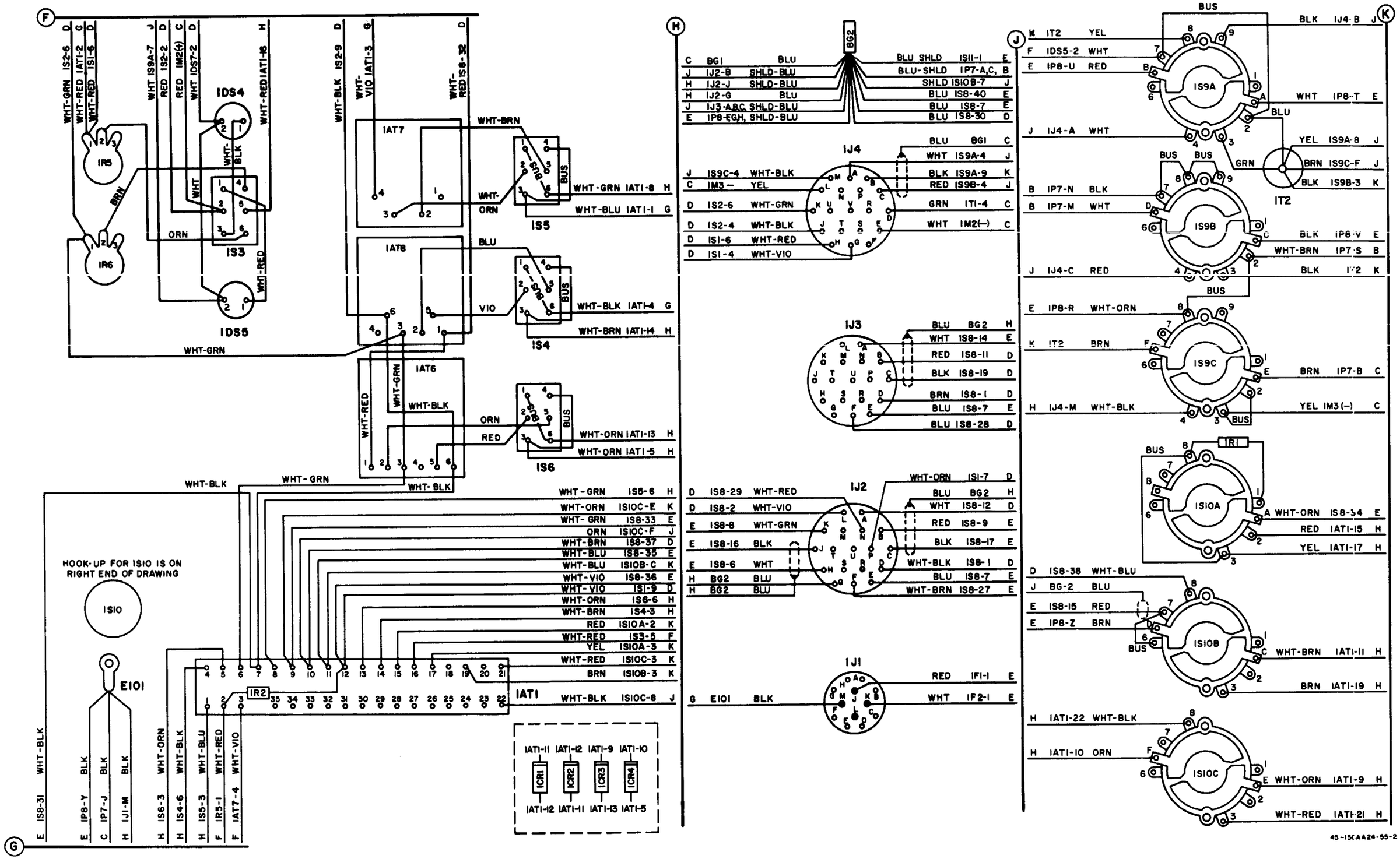

Figure 6-10. Wiring Diagram for Console, Part No. 2588219 (Sheet 2)

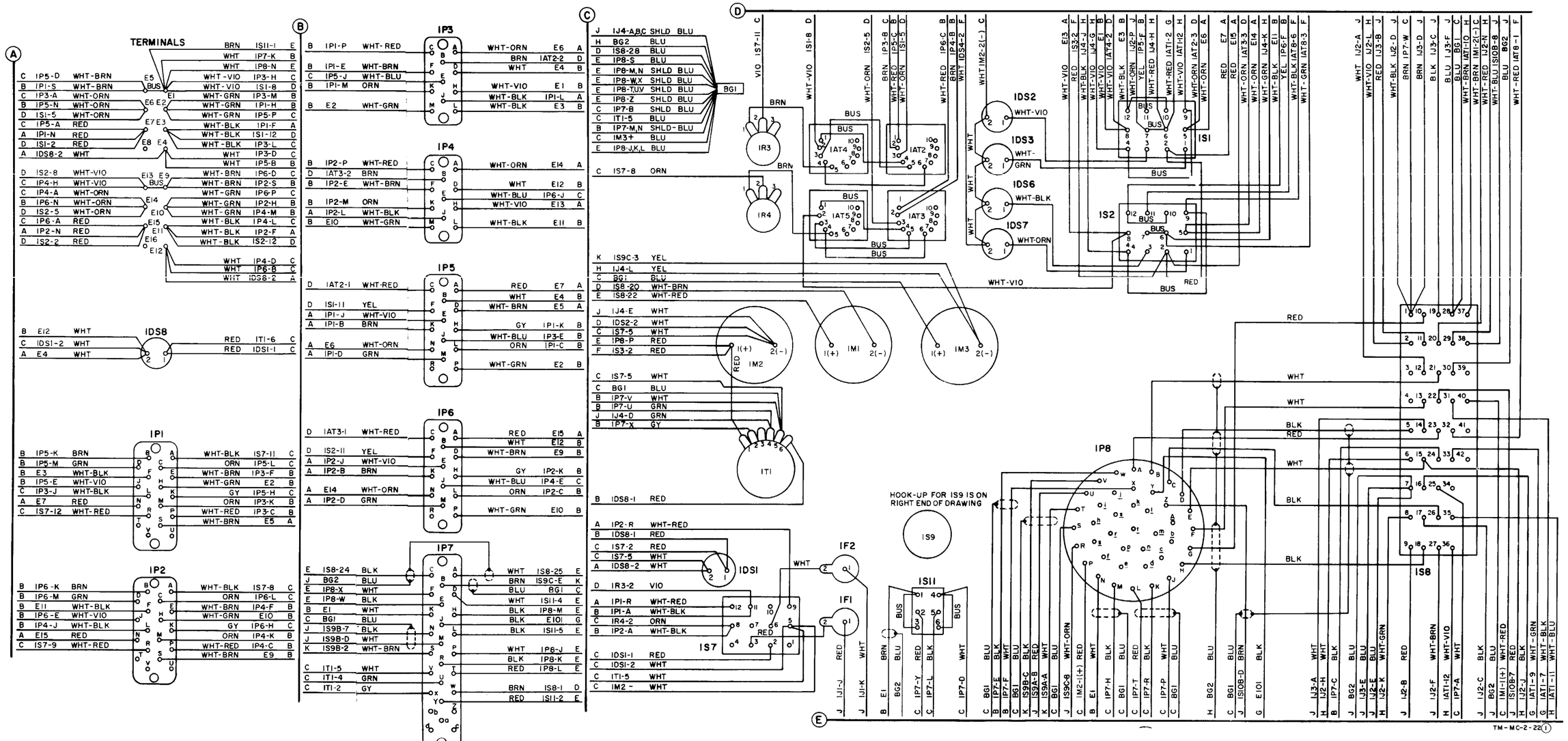

Figure 6-10A. Wiring Diagram for Console, Part No. 2591798 (Sheet 1 of 2)

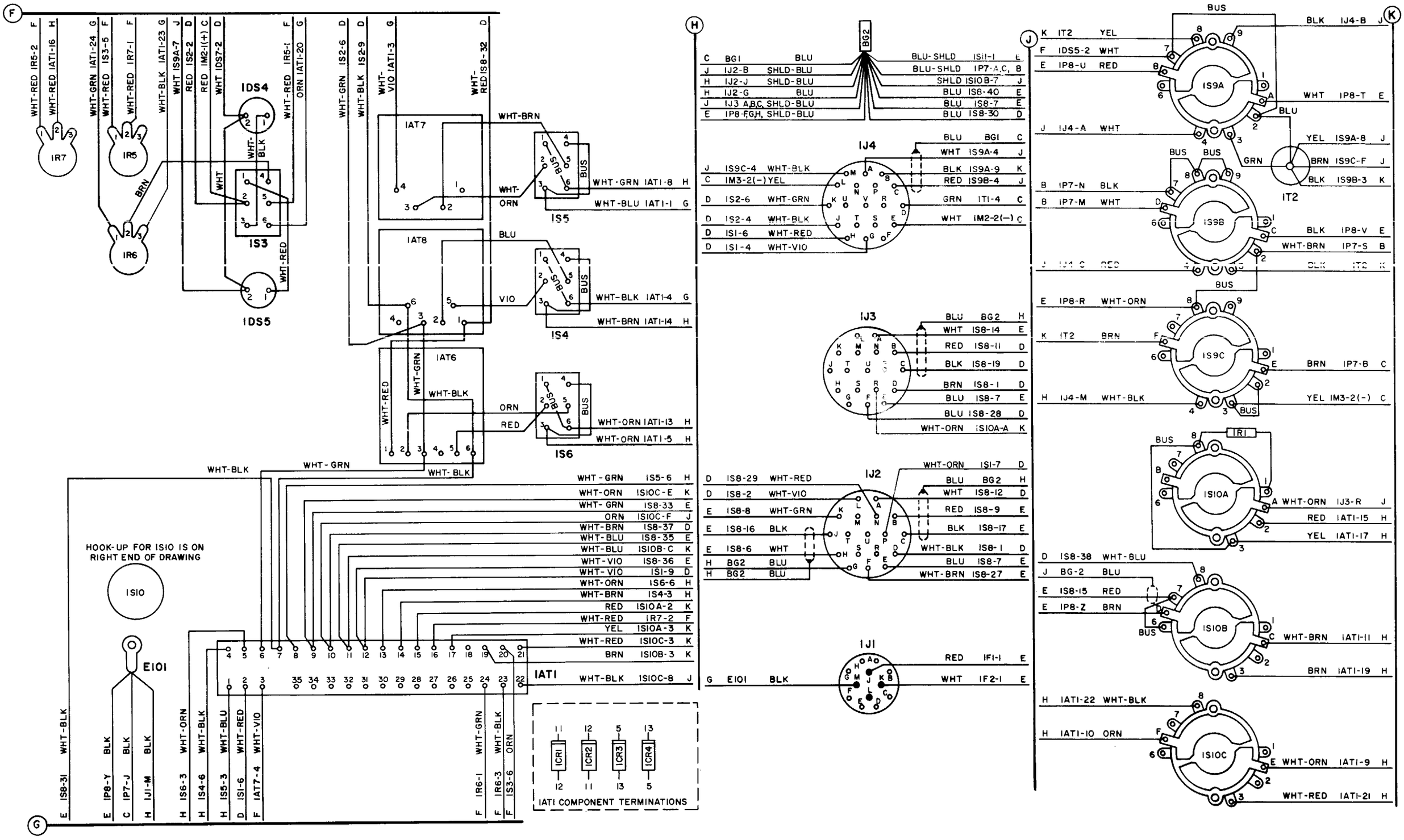

Figure 6-10A. Wiring Diagram for Console, Part No. 2591798 (Sheet 2 of 2)

TM-MC-2-22 (2)

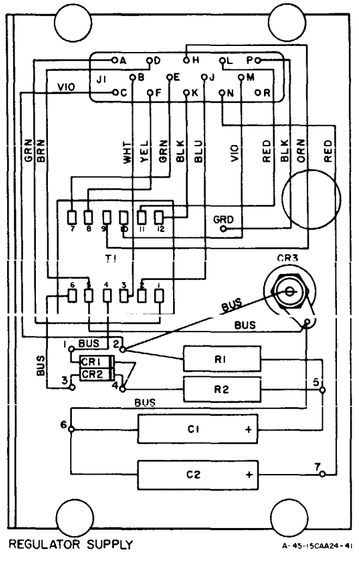

Figure 6-11. Regulator Supply Wiring Diagram

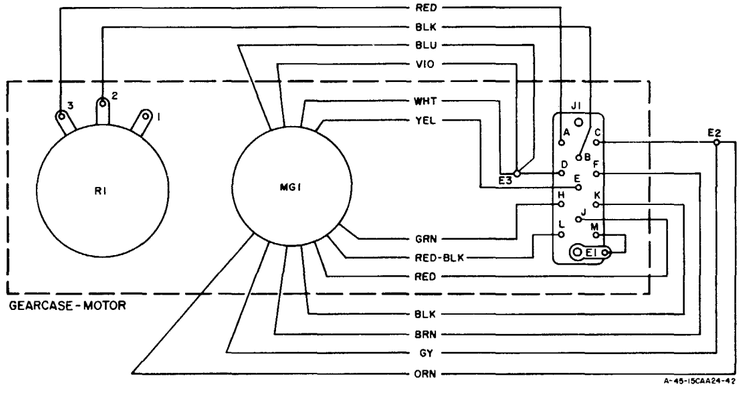

Figure 6-12. Gearcase-Motor Wiring Diagram

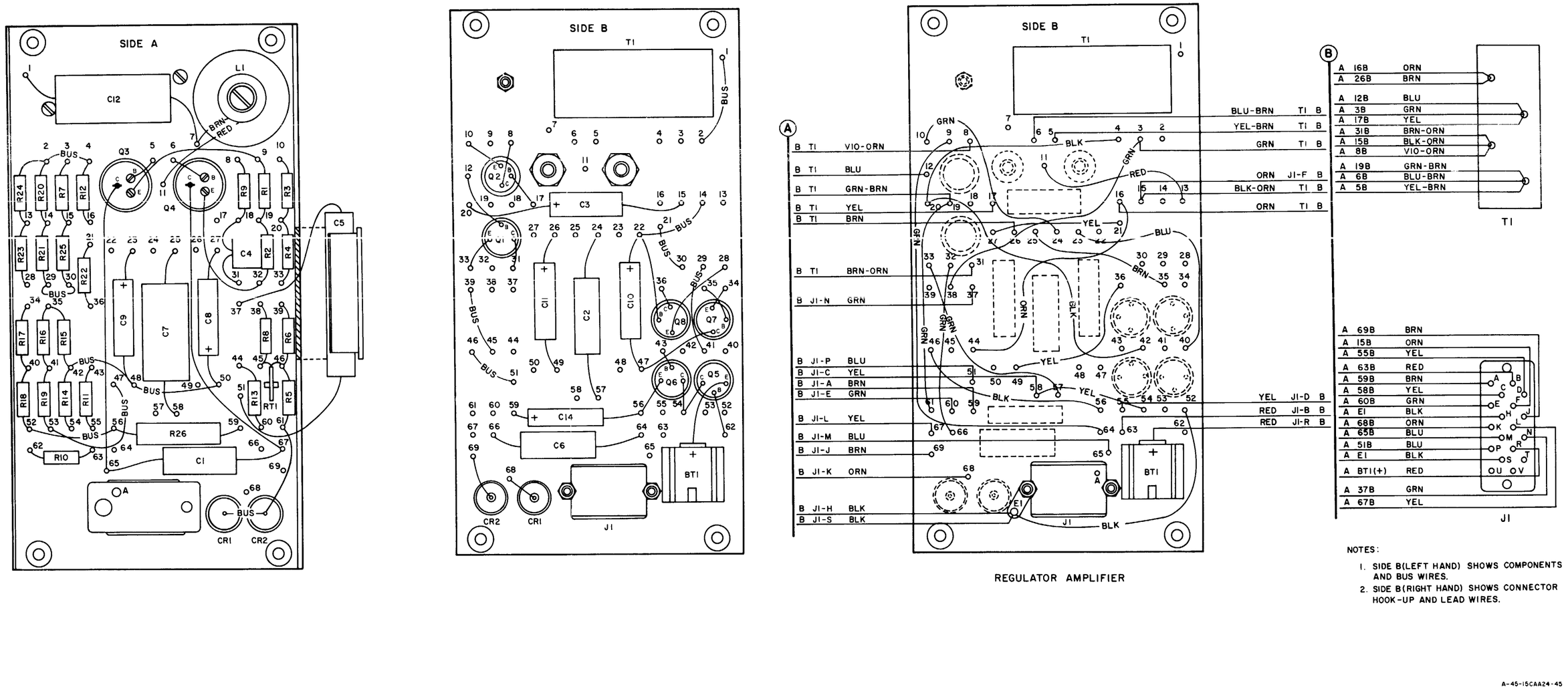

Figure 6-13. Regulator Amplifier Wiring Diagram

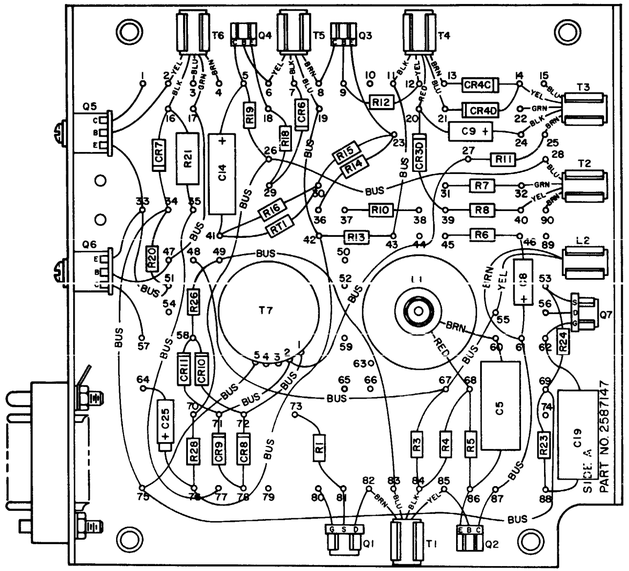

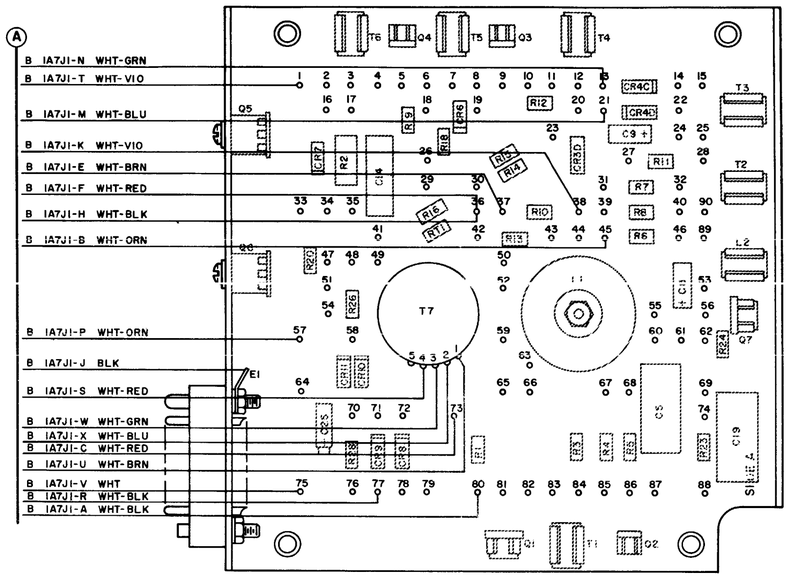

CONNECTOR HOOK-UP ONLY

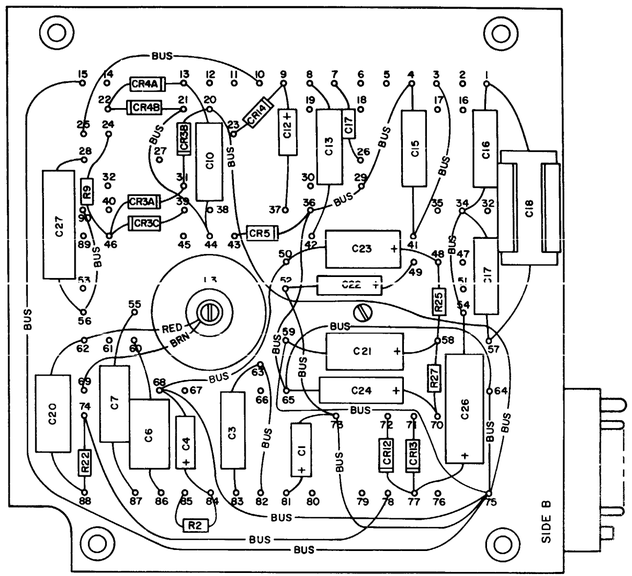

ANGLE INDICATOR AMPLIFIER

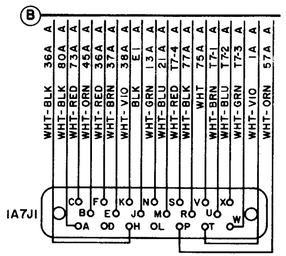

NOTES:

1. SIDE A (LEFT HAND VIEW) SHOWS COMPONENTS AND BUS WIRES ONLY.
2. SIDE A (RIGHT HAND VIEW) SHOWS CONNECTOR HOOK-UP.

A-45-15CAA24-44

Figure 6-14. Wiring Diagram for Angle Indicator Amplifier Used in Console, Part No. 2587177

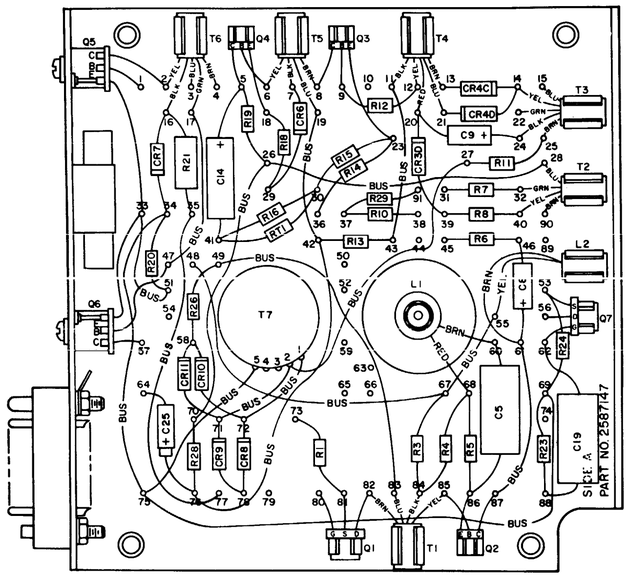

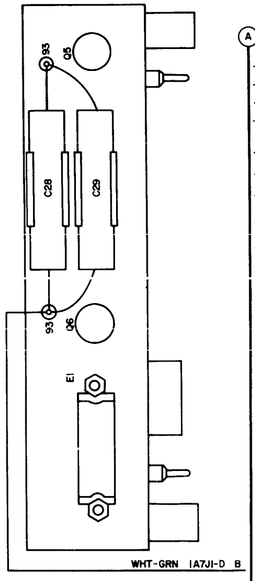

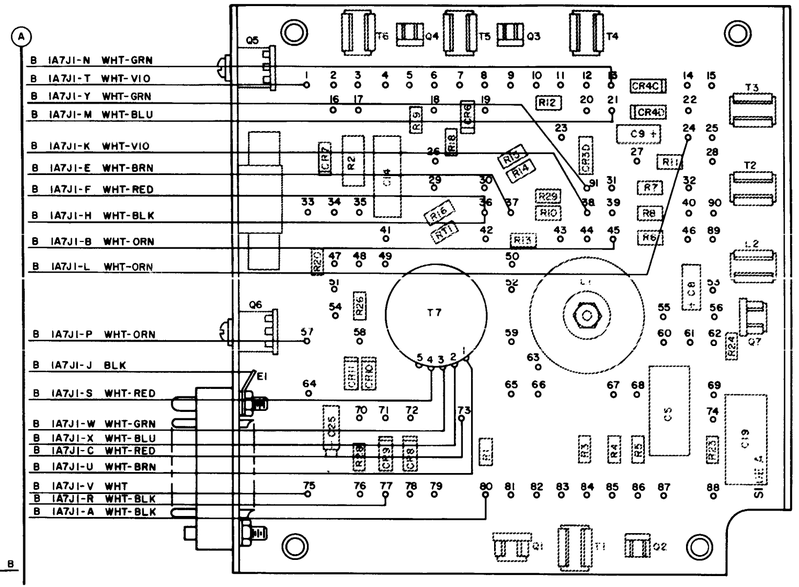

CONNECTOR HOOK-UP ONLY

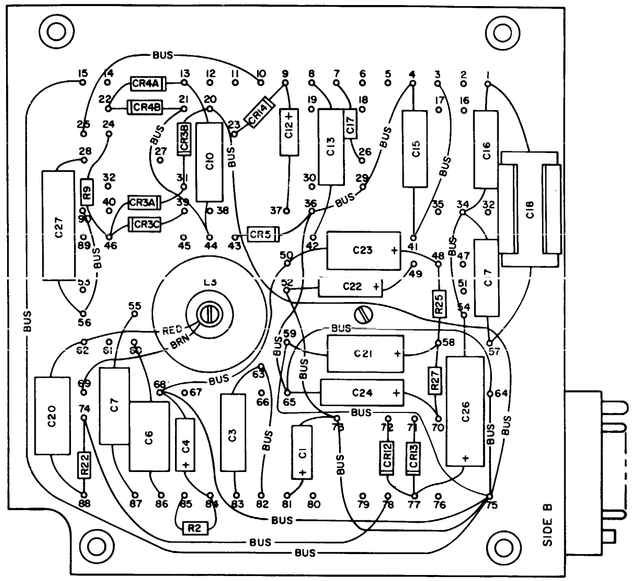

ANGLE INDICATOR AMPLIFIER

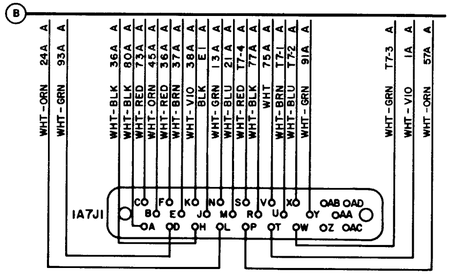

NOTES:

1. SIDE A (LEFT HAND VIEW) SHOWS COMPONENTS AND BUS WIRES ONLY.
2. SIDE A (RIGHT HAND VIEW) SHOWS CONNECTOR HOOK-UP.

Figure 6-15. Wiring Diagram for Angle Indicator Amplifier Used in Console, Part No. 2588219

45-15CAA24-56

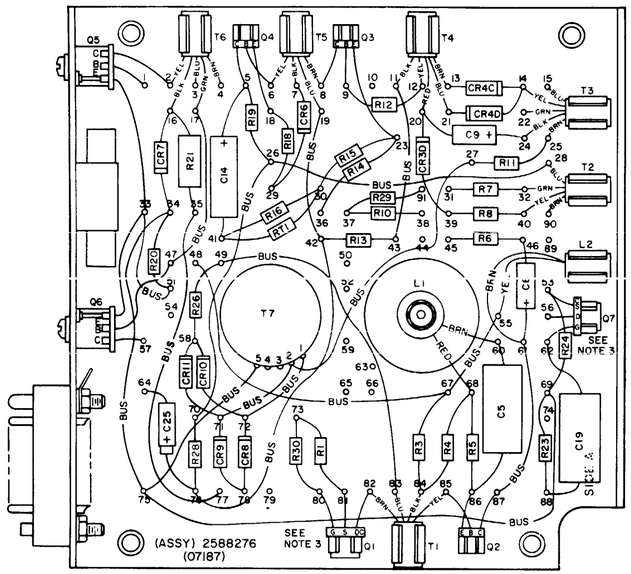

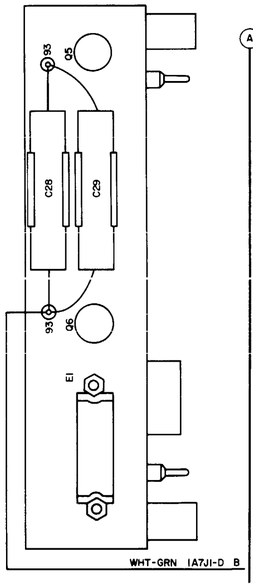

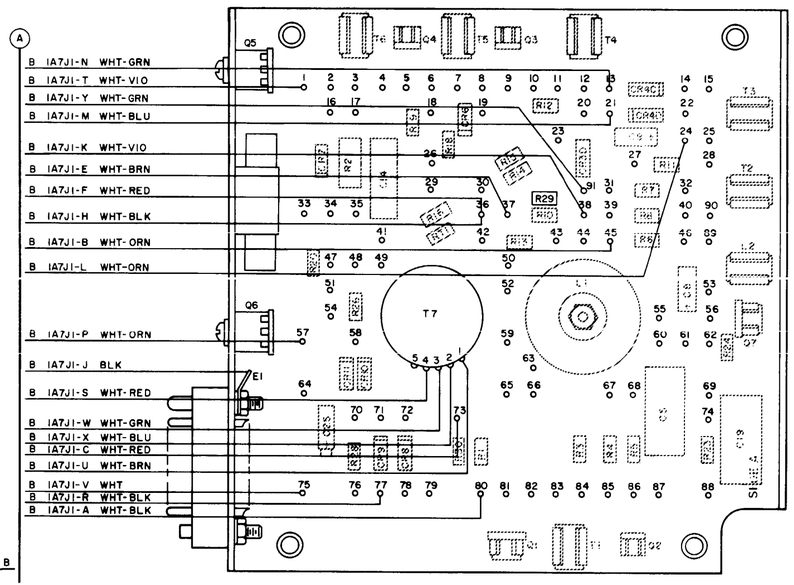

CONNECTOR HOOK-UP ONLY

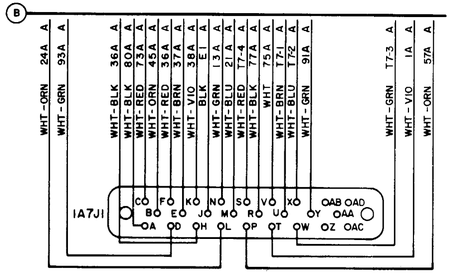

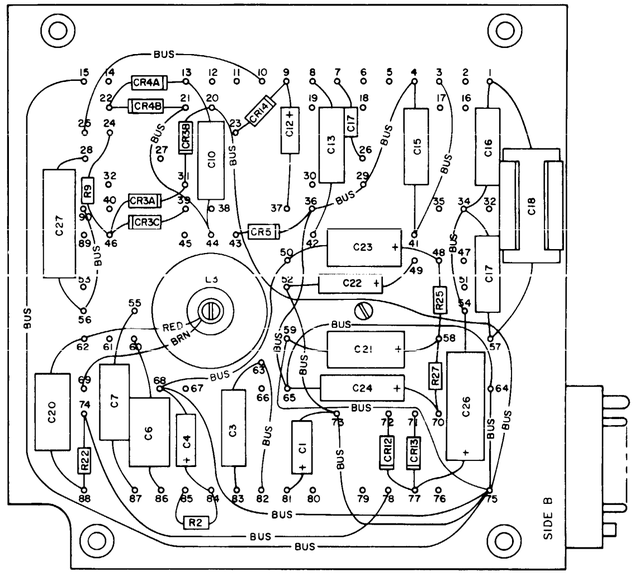

ANGLE INDICATOR AMPLIFIER

NOTES:

1. SIDE A (LEFT HAND VIEW) SHOWS COMPONENTS AND BUS WIRES ONLY.
2. SIDE A (RIGHT HAND VIEW) SHOWS CONNECTOR HOOK-UP
3. Q1 AND Q7 LEAD IDENTIFICATION IS AS FOLLOWS:

TM-MC-2-23

Figure 6-15A. Wiring Diagram for Angle Indicator Amplifier Used in Console, Part No. 2591798

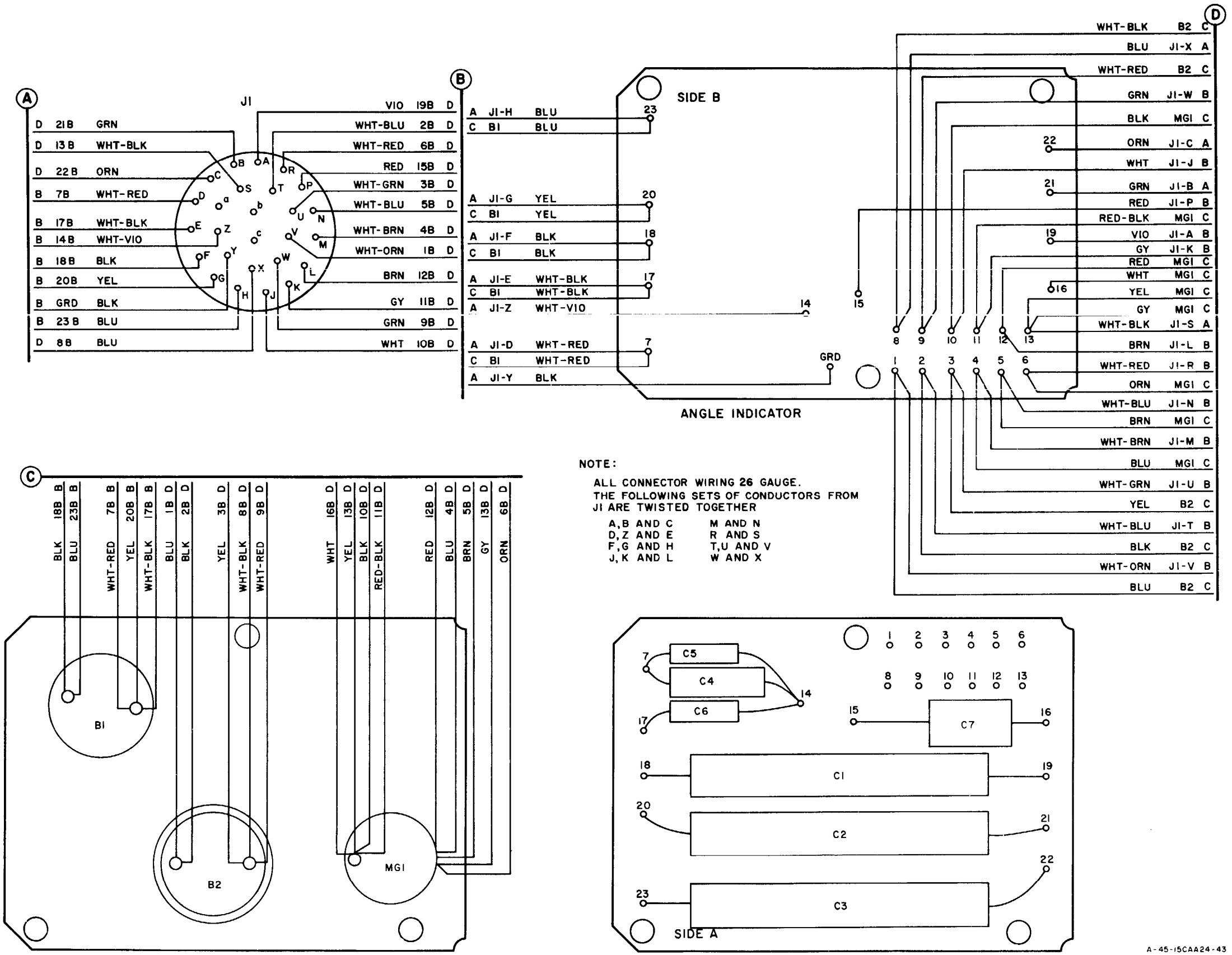

Figure 6-16. Wiring Diagram for Angle Indicator Used in Console, Part No. 2587177

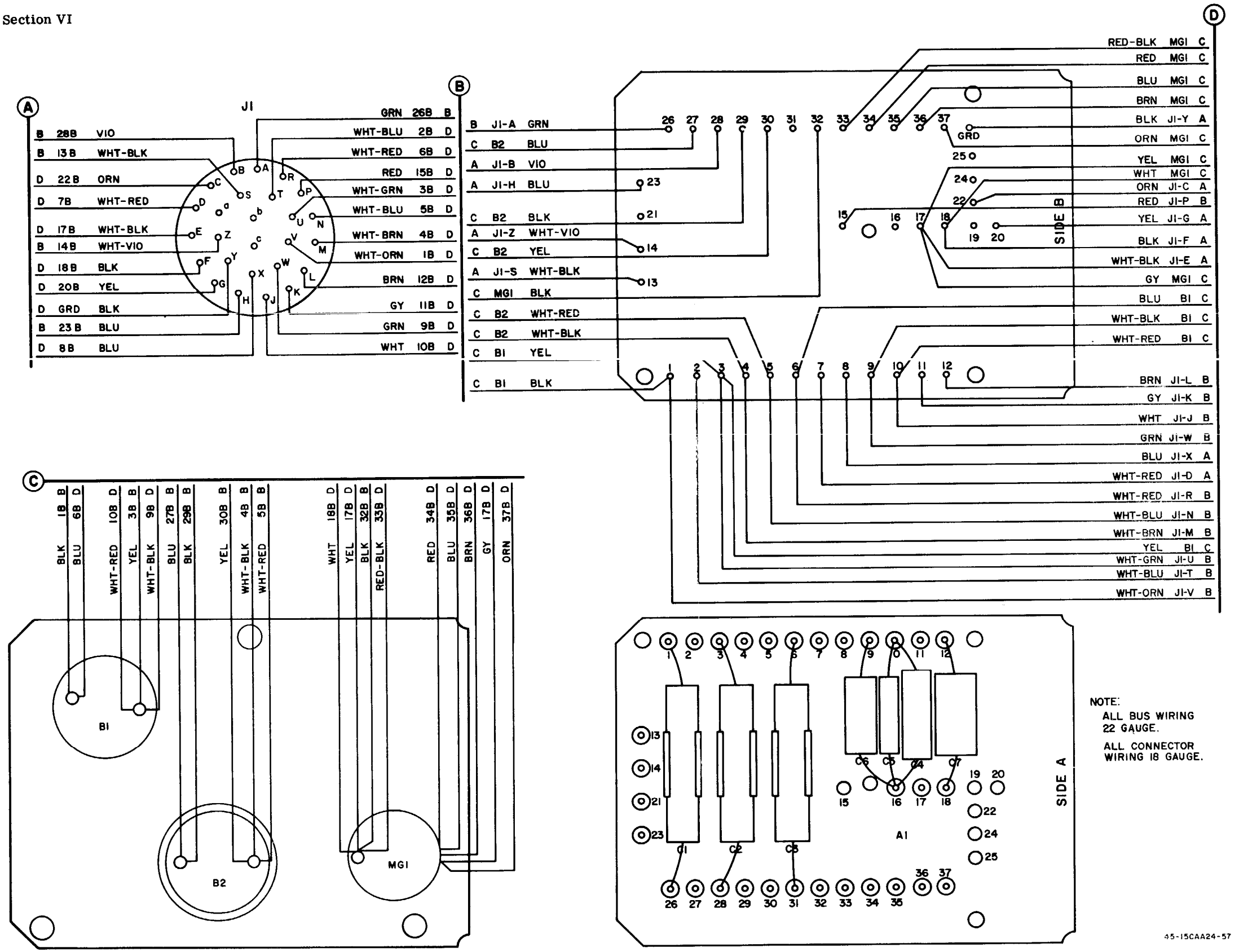

Figure 6-17. Wiring Diagram for Angle Indicator Used in Console, Part No. 2588219 and 2591798

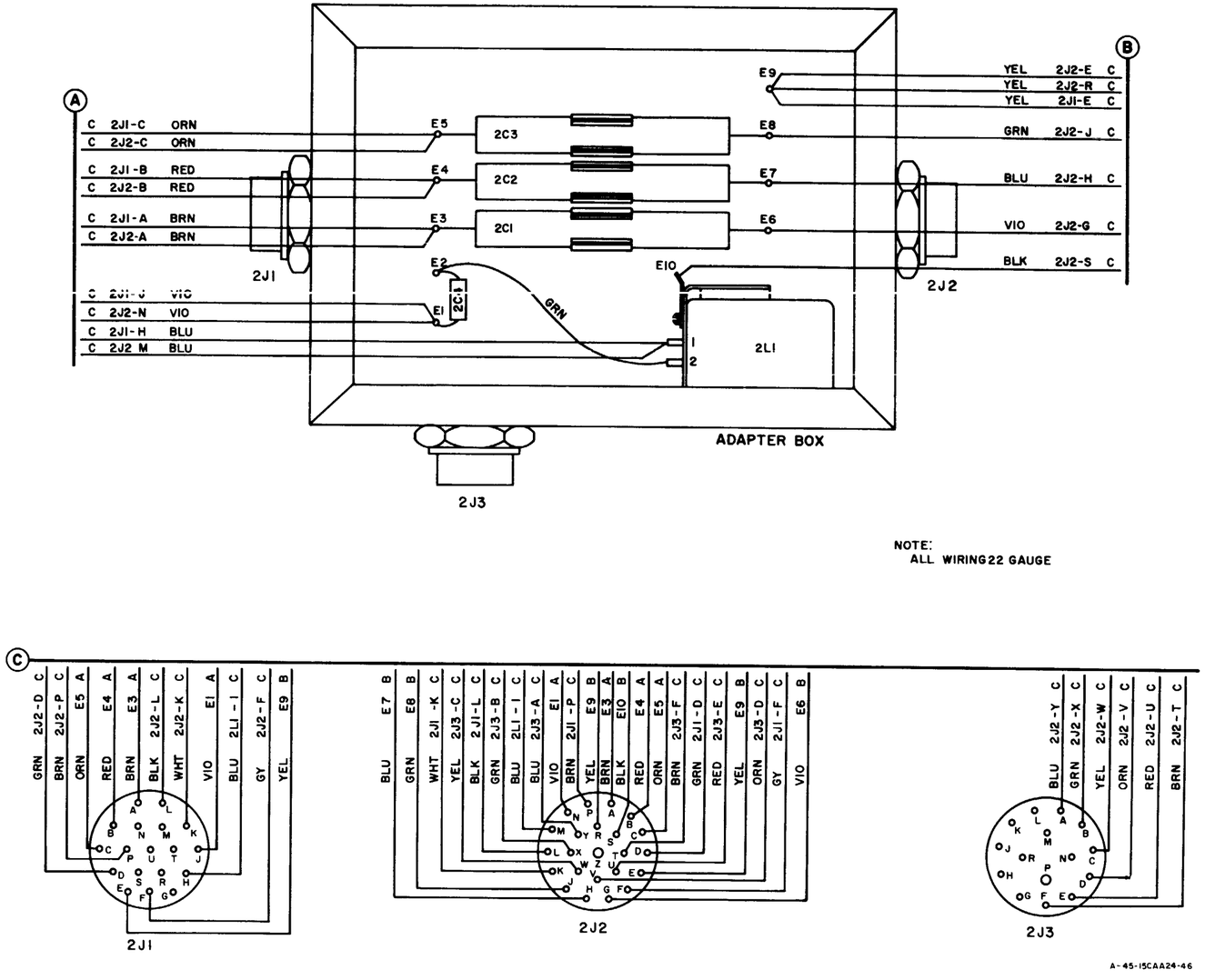

Figure 6-18. Adapter Box Wiring Diagram

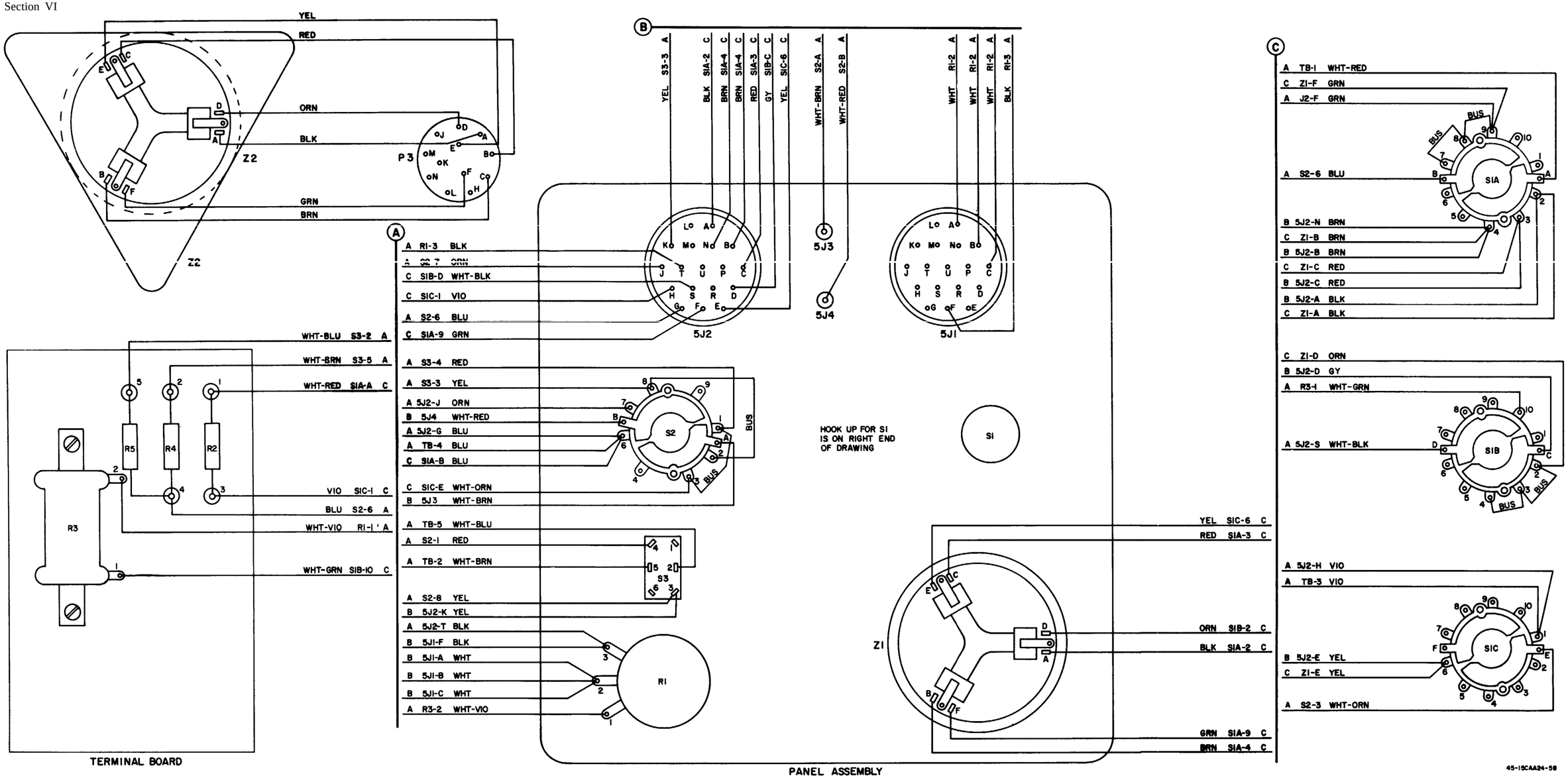

Figure 6-19. Field Tester Wiring Diagram

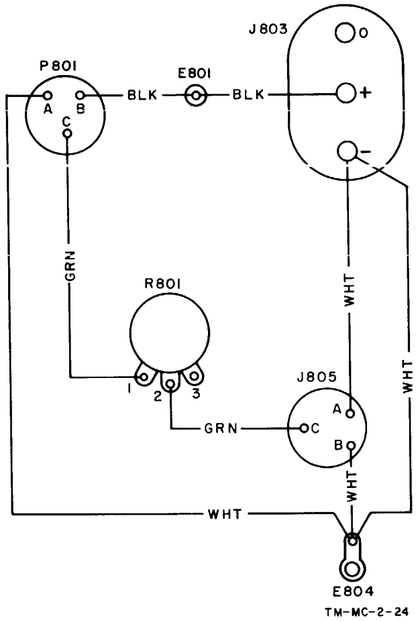

Figure 6-20. Power Supply Base Wiring Diagram

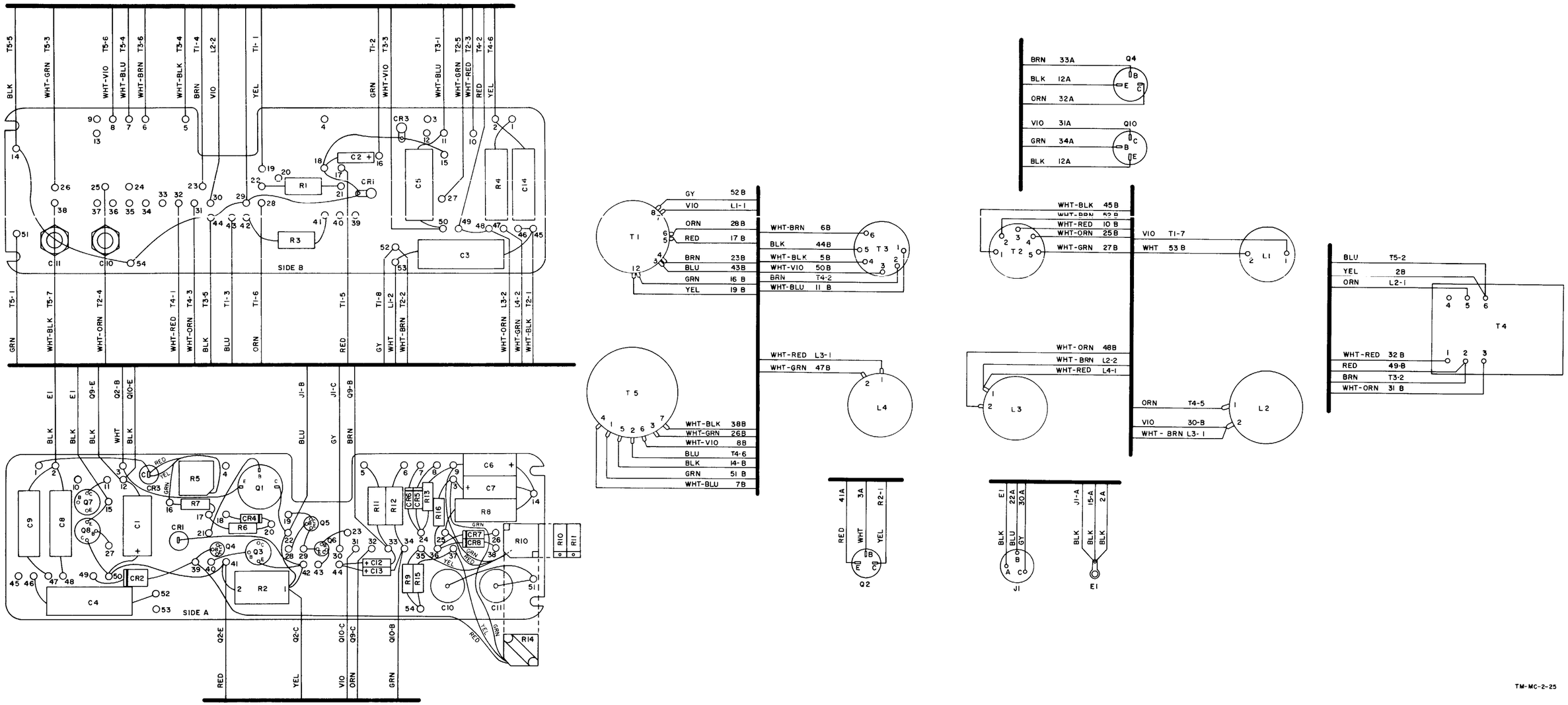

Figure 6-21. Inverter Wiring Diagram

SECTION VII
CALIBRATION

7-1. GENERAL.

7-2. This section provides complete step-by-step procedures for checking the reliability of Compass Calibrator indications and the steps required to restore the Compass Calibrator to new equipment performance standards.

7-3. Test equipment required for calibration and testing procedures is given in table 7-1.

7-4. (Applicable to Part No. 2592080-2, -4, and -5.) Calibrate and test the Compass Calibrator every 6 months by performing Console test procedures of table 7-2, and operational tests of paragraph 7-13. The Field Tester is used to conduct E1 and E2 power supply load and regulation tests. index error check. and demagnetization of the Monitor or transmitter sensitive element. Operational test procedures complete checkout of the Console to determine its reliability and serviceability.

7-4A. (Applicable to Part No, 2592080- 8.) Calibrate and test the Compass Calibrator every 6 months by performing flight line certification procedure in accordance with table 7-2A. Perform steps in the order given.

7-5. Troubleshooting procedures of table 6-1 are keyed to the calibration procedure of Section VII to provide a comprehensive system checkout procedure.

7-6. (Applicable to Part No. 2592080-2, -4, and -5.) The Field Tester is energized by turning on Console power. The Power Cart must be connected and energized prior to start of testing operations.

TABLE 7-1. TEST EQUIPMENT REQUIREMENTS FOR CALIBRATION

Nomenclature	Model or Part Number	Application	Range	Accuracy
Field Tester with adapter cable (Part of Compass Calibrator, Part No. 2592080-5) and-8	MC-2	~~Load regulation, and~~ ~~1800 cps index~~ Console tests. Demagnetization.		
Multimeter, Type ME-26/U	FSN 6625-544-8691	Continuity and d-c voltage measurement.	0 to 5 megohms 0 to 10 volts dc	±4 percent
A-c Vacuum Tube Voltmeter (a- c vtvm)	Hewlett- Packard Model 400D FSN 6625-643-1670	A-c voltage measurement.	0 to 120 volts ac	±3 percent
Electrical Power Test Set, Type AN/UPM-93	FSN 6625-581-2097	Frequency measurement.	36010420 cps 0 to 130 volts ac	±0.5 percent
Flux Valve Continuity Checker	Sperry T-100870 FSN 4920-569-5099	Check continuity of valve assembly in Field Tester.	0 to ∞ ohms ac 0 to 150 volts ac	±4 percent
Synchro Standard	Astrosystems Inc Model A202S-5 FSN 6625-973-4767	400 cps index tests.	0° to 360°	±0.001 percent

TABLE 7-2. CONSOLE TEST PROCEDURES

Step	Procedure	Normal Indication	Circuit or Function Tested	If Indication Is Abnormal
1 Part I	Console Power Test Remove panel assembly from case and connect Electrical Power Test Set to EXC VOLTS meter terminals. Connect cable assembly W1 from 1J1 of Console to Power Cart, MODE SELECTOR of Console to CAL. POWER ON-OFF of Console to POWER-ON.	POWER ON indicater shall light.	This light is paralleled with input power and verifies the application of 115 volts, 400 cps to power voltage control.	Replace burned out lamps and fuses. Check that power cables are properly and securely connected. Check Power Cart output for 115±10 volts, 400±5 cps. Check power cable and replace if faulty. Check POWER ON-OFF switch. Replace if faulty.
1 Part II	Rotate VOLTS ADJUST control to obtain 23.5 volts on EXC VOLTS meter. Observe FREQUENCY and EXC VOLTS meters of Console, and Electrical Power Test Set frequency meter and voltmeter.	The FREQUENCY meter of Console and Power Test Set frequency meter shall indicate 400±5 cps. EXC VOLTS meter of Console and voltmeter of Electrical Power Test Set shall indicate 23.5±0.5 volts.	These meters are connected across power voltage control to verify presence of correct voltage and frequency.	If no indication on either meter, check Power Cart output for 115±10 volts, 400+5 Cps. Check Console wiring. Check variable power transformer. Check for 23. 5-volt output at 1P7-W. If no indication on Console FREQUENCY meter, and if Electrical Power Test Set frequency meter indication is norreal, replace meter. If no indication on Console EXC VOLTS meter, and Electrical Power Test Set voltmeter indication is normal, replace meter.
1 Part III	Same as part II, this step except: MODE SELECTOR to VOLTS meter terminal.	Same as part II, this step.	Same as part II, this step.	Replace MODE SELECTOR switch.

TABLE 7-2. CONSOLE TEST PROCEDURES (cont)

Step	Procedure	Normal Indication	Circuit or Function Tested	If Indication Is Abnormal
1 Part IV	Same as part II, this step except: MODE SELECTOR to COMP.	No indication on ExC VOLTS meter.	Meter is not in circuit.	Short in wiring. Check out and repair.
1 Part V	El and E2 NORM. -REV. switches to NORM. , then REV. Observe E1 and E2 indicater lights.	Indicator lights shall light at each position.	These indicators are connected in parallel with E1 and E2 voltages and indicate presence of E1 and E2 power supply voltages.	Check for burned out lamps. Perform E1 and E2 voltage range checks, steps 4 and 5.
1 Fart VI	E1-E2 CHECK switch to E1 CHECK and E2 CHECK. Observe E1 CHECK and E2 CHECK indicator lights. Replace rack-panel assembly in case.	Indicator lights shall light at each position.	These indicators verify operation of E1-E2 CHECK switch.	Check for burned out lamps. Check E1-E2 CHECK switch.
2 Part I	Angle Indicator Control Transformer 1A8B1 Index Error Test Connect cable assembly W1 from 1J1 of Console to Power Cart. Connect Field Tester cable assembly W4 end W4P1 to field tester 5J2. Connect Field Tester cable assembly W4 end W4P2 to Console 1J4, and end W4P3 to Console 1J3. See figure 7-1. E1 NORM. -REV. to E1 REV. El magnitude controls to 90-10-0. MODE SELECTOR to MON. E2 NORM. -REV. to OFF. E1-E2 CHECK to OFF. POWER ON-OFF switch to POWER ON. (Continued)	Refer to part VII, this step. HEADING ERROR readout shall indicate 0 DEGREE ±60 MINUTES.	Field Tester generates magnetic heading information to control transformer 1A13B1 and null detection circuits in angle indicator and angle indicator amplifier.	Replace angle indicator. Replace angle indicator amplifier. If neither of the above, replace Console.

TABLE 7-2. CONSOLE TEST PROCEDURES (cont)

Step	Procedure	Normal Indication	Circuit or Function Tested	If Indication Is Abnormal
2 Part I (cont)	READOUT SELECT to FV. FV SELECT to 1 or 2. Rotate ADJUST VOLTS control of Console until EXC VOLTS meter of Console indicates 23.5 volts. S1 of Field Tester to 1. HEADING SELECTOR of Console to 0 DEGREES. Observe error in ERROR window and record.			
2 Part II	Same as part I, this step except set Field Tester S1 to 2.	Refer to part VII this step. HEADING ERROR readout shall indicate 120 DEGREES ±60 MINUTES.	Same as part I, this step.	Refer to part I, this step.
2 Part III	Same as part I, this step except set Field Tester S1 to 3.	Refer to part VII, this step. HEADING ERROR readout shall indicate 240 DEGREES ±60 MINUTES.	Same as part I, this step.	Refer to part I, this step.
2 Part IV	Same as part I, this step except set Console El NORM. -REV. switch to El NORM.	Refer to part VII, this step. HEADING ERROR readout shall indicate 180 DEGREES ±60 MINUTES.	Same as part I, this step,	Refer to part I, this step.
2 Part V	Same as part IV, this step except set Field Tester S1 to 2.	Refer to part VII, this step. HEADING ERROR readout shall indicate 300 DEGREES ±60 MINUTES.	Same ae part I, this step.	Refer to part I, this step.
2 Part VI	Same as part IV, this step except set Field Tester S1 to 3.	Refer to part VII, this step. HEADING ERROR readout shall indicate 60 DEGREES ±60 MINUTES.	Same as part I, this step.	Refer to part I, this step.

TABLE 7-2. CONSOLE TEST PROCEDURES (cont)

Step	Procedure	Normal Indication	Circuit or Function Tested	If Indication Is Abnormal
2 Part VII	Calculate the index error by adding the six errors algebraically, one for each heading, and divide the sum by six. See following example:	Index error shall be 0±3 minutes.	Same as part I, this step.	Refer to part I, this step.
	EXAMPLE:			

Console El NORM. -REV. Switch	Field Tester S1 Switch	Heading	Console Readout Indication	Difference (minutes)
REV	1	0	0 DEGREES -7 MINUTES	-7 (red error scale*)
REV	2	120	120 DEGREES -5 MINUTES	-5 (red error scale*)
REV	3	240	240 DEGREES +6 MINUTES	+6 (white error scale*)
NORM	1	180	160 DEGREES -15 MINUTES	-15 (red error scale*)
NORM	2	300	300 DEGREES -3 MINUTES	-3 (red error scale*)
NORM	3	60	60 DEGREES +20 MINUTES	+20 (white error scale*)

-4 min ÷ 6 = -0.66 minute -4

*Only when testing Console, Part No. 2588219. For Console, Part No. 2587177, refer to note after paragraph 4-12. h.

3 art I	El Voltage Range Test Connect equipment as in step 2, part I. Set multimeter to DC VOLTS and connect to field tester 5J3 and 5J4. See figure 7-1. Set the Console as follows: El NORM. -REV. to NORM. MODE SELECTOR to MON. E2 NORM. -REV. to OFF. POWER ON-OFF to POWER ON. Rotate ADJUST VOLTS control of Console to obtain a reading of 23.5 volts on EXC VOLTS meter and allow 2 minutes to stabilize. S2 of field tester to E1. (Continued)	Multimeter shall indicate within 5 percent of voltage indications on E1 VOLTS and vernier controls at each setting.	Multimeter reads E1 voltage supply output at E1 switch 1S1A5 and 8.	Check circuit wiring. Replace as required. Substitute E2 subassembly for suspected defective E1 subassembly. Check switches and controls. Replace as necessary.

TABLE 7-2. CONSOLE TEST PROCEDURES (cont)

Step	Procedure	Normal Indication	Circuit or Function Tested	If Indication Is Abnormal
3 Part (cont)	READOUT SELECT to 0. E1 0 to 10 VOLTS of Console to 0. E1 vernier of Console to 0. S1 of Field Tester to OFF. While observing multimeter, set E 1 5 to 90 VOLTS to each position from 5 through 90.			
3 Part II	E1 5 to 90 VOLTS to 5. While observing multimeter, set E1 0 to 10 VOLTS to each position from 1 through 10.	Same as part I, this step.	Same as part I, this step.	Same as part I, this step.
3 Part III	El 5 to 90 VOLTS to 5. E1 0 to 10 VOLTS to 0. While observing multimeter, set E1 vernier to 500.	Multimeter shall indicate 6.00± 0.30 volts.	Same as part I, this step.	Same as part I, this step.
3 Part IV	While observing multimeter, set E1 vernier to 1000.	Multimeter shall indicate 7.00± 0.35 volts.	Same as part I, this step.	Ssme as part I, this step.
4	E2 Voltage Range Test Same as step 3 except: S2 of field tester to E2. E2 NORM. -REV. of Console to E2 NORM. While observing multimeter, set E2 vernier as in step 2, parts I, II, III, and IV.	Same as step 3, except applicable to E2 VOLTS and vernier controls.	Multimeter reads E2 voltage supply output at E2 switch 1S2A5 and 8.	Same as step 3, except applicable to E2 power supply circuit.
5	E1/E2 Load Regulation Check Set up equipment as in step 3 and figure 7-1. (Continued)	Multimeter shall indicate 0.050 volt dc or less at each setting. (Continued)	This test checks regulation of E1 and E2 circuits by connecting (Continued)	Replace subassemblies to isolate trouble to E1 or E2 power supply circuit.

TABLE 7-2. CONSOLE TEST PROCEDURES (cont)

Step	Procedure	Normal Indication	Circuit or Function Tested	If Indication Is Abnormal
5 (cont)	S2 of Field Tester to E1/E2. S3 of Field Tester to OFF. E1 NORM. -REV. of Console to E1 NORM. E2 NORM. -REV. of Console to E2 NORM. MODE SELECTOR to MON. El and E2 VOLTS and vernier of Console to 90-9-500. Adjust E2 VOLTS and vernier of Console until multimeter indicates 0 volts. S3 of Field Tester to E1 and then to E2,	**Note** Momentary deflection exceeding 0.050 volt is normal.	E1 and E2 voltages to a common ground. The multimeter measures the differential voltage. To check load regulation, an 18K resistor is applied across E1 output or a 56K resistor across E2 output, and the dfffer - ential voltage is measured.	
6	<u>E1/E2 Line Regulation Check</u> S3 of Field Tester to OFF. Adjust EXC VOLTS of Console to 22.5 volts, then 24.5 volts.	Multimeter shall show a momentary deflection and then indicate 0. 050 volt or less.	The a-c input voltage is varied by adjusting output of variable power transformer.	Substitute for E1 and E2 regulator amplifier subassembly, one at a time. Replace faulty regulator amplifier subassembly.
7 Part I	<u>Angle Indicator Control Transformer 1A8B2 Index Error Test</u> Connect cable assembly W1 from 1J1 of Console to Power Cart. Connect synchro standard to Console 1J4 as follows: **S1 BLUE to 1J4-~~C~~ A** **S2 BLACK to 1J4-~~A~~ C**	Refer to part VII, this step. HEADING ERROR readout shall indicate 0 DEGREES **±60 MINUTES.**	Synchro standard supplies magnetic heading information for control transformer 1A6B2 anc null detection circuits in angle indicator and angle indicator amplifier.	Replace angle indicator. Replace angle indicator amplifier. If neither of the above, replace Console.

TABLE 7-2. CONSOLE TEST PROCEDURES (cont)

Step	Procedure	Normal Indication	Circuit or Function Tested	If Indication Is Abnormal
7 Part (cont)	S3 ~~GREEN~~ YELLOW to 1J4-B R1 RED to 1J4-D R2 BLACK to 1J4-E El NORM. -REV. to El REV. El magnitude controls to 90-10-0. MODE SELECTOR to MON. E2 NORM. -REV. to OFF. E1-E2 CHECK to OFF. POWER ON-OFF switch to POWER ON. READOUT SELECT to EXT CX. FV SELECT to 1 or 2. Rotate ADJUST VOLTS control on Console until EXC VOLTS meter of Console indicates 23.5 volts. Synchro standard readout to 0. HEADING SELECTOR of Console to 0 DEGREES. Observe error in ERROR window and record.			
7 Part II	Same as part I, this step, except set synchro standard readout to 60.	Refer to part VII, this step. HEADING ERROR readout shall indicate 60 DEGREES ±60 MINUTES.	Same as part I, this step.	Refer to part I, this step.
7 Part III	Same as part I, this step, except set synchro standard readout to 120.	Refer to part VII, this step. HEADING ERROR readout shall indicate 120 DEGREES ±60 MINUTES.	Same as part I, this step.	Refer to part I, this step.

TABLE 7-2. CONSOLE TEST PROCEDURES (cont)

Step	Procedure	Normal Indication	Circuit or Function Tested	If Indication Is Abnormal
7 Part IV	Same as part I, this step, except set synchro standard readout to 180.	Refer to part VII, this step. HEADING ERROR readout shall indicate 180 DEGREES ±6 MINUTES.	Same as part I, this step.	Refer to part I, this step.
7 Part V	Same as part I, this step, except set synchro standard readout to 240.	Refer to part VII, this step. HEADING ERROR readout shall indicate 240 DEGREES ±6 MINUTES.	Same as part I, this step .	Refer to part I, this step.
7 Part VI	Same as part I, this step, except set synchro standard readout to 300.	Refer to part VII, this step. HEADING ERROR readout shall indicate 300 DEGREES ±6 MINUTES.	Same as part I, this step.	Refer to part I, this step.
7 Part VII	Calculate the index error by adding the six errors algebraically, one for each heading, and divide the sum by six. See following example:	Index error shall be 0±3 minutes.	Same as part I, this step.	Refer to part I, this step.

EXAMPLE :

Synchro Standard Readout	Heading	Console Readout Indication	Difference (minutes)
0	0	0 DEGREES -7 MINUTES	-7 (red error scale*)
60	60	60 DEGREES +20 MINUTES	+20 (white error scale*)
120	120	120 DEGREES -5 MINUTES	- 5 (red error scale*)
180	180	180 DEGREES -15 MINUTES	-15 (red error scale*)
240	240	240 DEGREES +6 MINUTES	+6 (white error scale*)
300	300	300 DEGREES -3 MINUTES	-3 (red error scale*)
		-4 min ÷ 6 = -0.66 minute	-4

*Only when testing Console, Part No. 2588219. For Console, Part No. 2587177, refer to note after paragraph 4-12. h.

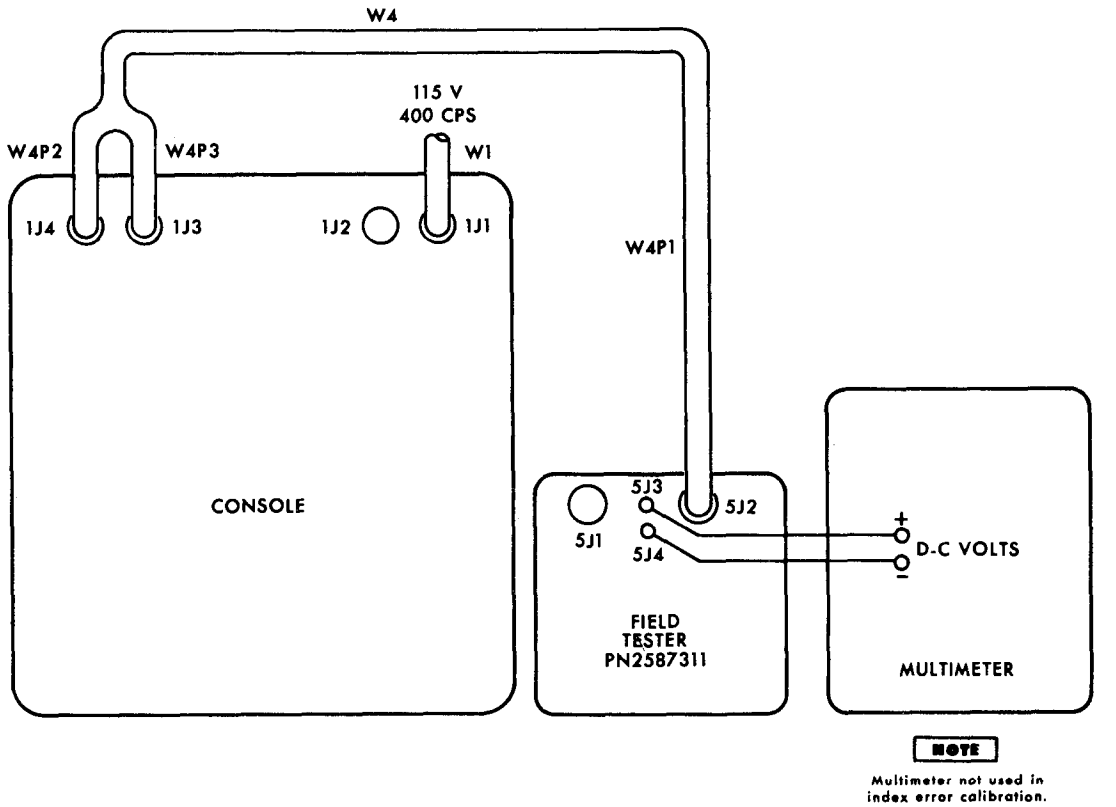

Figure 7-1. Test Setup for E1 and E2 Voltage Range and Regulation Check and Index Error Calibration

(Applicable to Part No. 2592080-2, -4, and -5.)

7-7. MAGNETIC ALIGNMENT CALIBRATION. Check alignment of Monitor telescope as follows:

a. Mount magnetic azimuth reference detector of field tester on Turntable, in a magnetically stable area, using mounting screws provided, and accurately level the Turntable. With telescope upright, tighten mounting screws on magnetic azimuth reference detector.

b. Connect cable assembly W2 to 1J3 connector of Console and magnetic azimuth reference detector P3 to Turntable. See figure 7-2. Set up Console as follows :

E 1, E2 switches to OFF.
MODE SELECTOR to MON.
POWER ON-OFF to POWER ON.
VOLTS ADJUST to 23.5 on EXC VOLTS meter.
READOUT SELECT to FV .

c. Rotate Turntable to obtain 0 ± 10 minutes on readout and set azimuth scale to 0. Record readout error.

Note

Readout error is defined as the difference between Monitor, Turntable, or HEADING SELECTOR heading and the heading indicated by readout of Console when at null. Positive errors appear on white scale of MINUTES window and negative errors on red scale.

d. Rotate Turntable to 90-, 180-, and 270-degree headings. Record error at each heading.

e. Add the errors at the four headings (0, 90, 180, 270 degrees) algebraically and divide by four. This is the index error (11). Record this value.

f. Sight a target at a distance of at least 1/2 mile, using the magnetic azimuth reference detector tele - scope. Target elevation shall be within ±5 degrees of horizontal. Record the bearing (B) of this target.

TABLE 7-2A. FLIGHT LINE CERTIFICATION PROCEDURE

Step	Procedure	Normal Indication	Circuit or Function Tested	If Indication Is Abnormal
1 Part I	Power Test Set Console and Field Tester controls to OFF, 0, or fully counterclockwise position. Connect cable W1 between J805 of Power Supply and 1J1 POWER of Console. Connect Field Tester cable W4 between 5J2 INPUT of Field Tester and 1J4 EXT CX & TEST and 1J3 MONITOR of Console. Connect multimeter between 5J3 and 5J4 (low) of Field Tester. Set multimeter to +DC VOLTS. Connect J803 of Power Supply to 28-volt d-c power source. POWER ON-OFF to POWER ON.	POWER ON indicater shall light and FREQUENCY meter shall indicate 400 ±5 cps.	This indicator and meter are connected in parallel with input power and verifies the application of 115 volts, 400 cps to Console.	Replace defective fuse 1F1 or 1F2, switch 1S7, lamp 1DS1, transformer 1T1, meter 1M2, or Power Supply.
1 Part II	MODE SELECTOR to CAL. Adjust VOLTS ADJUST control until EXC VOLTS meter indicates 23.5 volts . Set MODE SELECTOR to each position.	EXC VOLTS meter shall indicate 23.5 ±0. 5 volts in each position except COMP, where there shall be no indication.	This meter is connetted across voltage control and monitors excitation voltage applied to Monitor or transmitter.	Replace defective transformer 1T1, meter 1M1, or switch 1S8.
2 Part I	E1 Voltage Range Test MODE SELECTOR to MON. El NORM. -REV. to E1 NORM .	E1 NORM. indicator shall light.	This indicator verifies that E1 NORM. -REV. switch is in E1 NORM. position.	Replace defective switch 1S1 or lamp 1DS2.

TABLE 7-2A. FLIGHT LINE CERTIFICATION PROCEDURE (CONT)

Step	Procedure	Normal Indication	Circuit or Function Tested	If Indication Is Abnormal
2 Part 11	S2 to E1. Set E1 VOLTS (5-90) to each position.	Multimeter shall indicate same as E1 VOLTS setting ±5 percent.	These switches adjust d-c output of El regulated power supply.	Replace defective regulator supply 1A5, regulater amplifier 1A1, gearcase motor 1A3, switch 1AT2 or 1AT4, variable resistor 1R3, or Field Tester. Isolate trouble by substituting regulator supply 1A6 for 1A5, regulator amplifier 1A2 for 1A1, and gearcase motor 1A4 for 1A3. Perform Field Tester d-c continuity check in accordance with paragraph 7-7B.
2 Part III	E1 VOLTS (5-90) to 5. Set E1 VOLTS (1-10) to each position.	Multimeter shall indicate same as E1 VOLTS setting ±5 percent.		
2 Part IV	El VOLTS (0-10) to 0. E1 vernier to 500.	Multimeter shall indicate 6.00 ± 0.30 volts.		
2 Part V	E1 vernier to 1000.	Multimeter shall indicate 7.00 ± 0.35 volts.		
3	<u>E2 Voltage Range Test</u> El NORM.-REV. to OFF. Repeat step 2 substituting E2 for all references to E1.	Same as step 2 except substitute E2 for all references to E1.	Same as step 2 except substitute E2 for all references to E1.	Replace defective regulater supply 1A6, regulator amplifier 1A2, gearcase motor 1A4, switch 1AT3 or 1AT5, variable resistor 1R4, or Field Tester. Isolate trouble by substituting regulator supply 1A5 for 1A6, regulator amplifier 1A1 for 1A2, and gearcase motor 1A3 for 1A4. Perform Field Tester d-c continuity check in accordance with paragraph 7-7B.
4	<u>E1- E2 Load Regulation Test</u> S2 to E1/E2. E1 NORM.-REV. to E1 NORM. E1 NORM.-REV. to E1 controls to 90-9-500. Adjust E2 vernier until multimeter indicates o volt. S3 to E1, then to E2.	Multimer shall indicate 50 millivolts or less in each Note Disregard momentary deflection exceeding 50 millivolts.	Load regulation of E1 and E2 regulated power supplies.	Replace defective regulator amplifier 1A1 or 1A2 or gearcase motor 1A3 or 1A4. Isolate trouble by changing position of regulator amplifiers. If results are the same, change position of gearcase motors.

TABLE 7-2A. FLIGHT LINE CERTIFICATION PROCEDURE (CONT)

Step	Procedure	Normal Indication	Circuit or Function Tested	If Indication Is Abnormal
5 Part I	E1-E2 Line Regulation Test S3 to OFF. Adjust VOLTS ADJUST control until EXC VOLTS meter indicates 22.5 volts.	Multimeter shall indicate 50 millivolts or less. **Note** Disregard momentary deflection exceeding 50 millivolts.	Line regulation of E1 and E2 regulated power supplies.	Same as step 4.
5 Part II	Adjust VOLTS ADJUST control until EXC VOLTS meter indicates 24.5 volts.			
6 Part I	Readout Command Accuracy Test READOUT SELECT to 90.	HEADING and ERROR readout shall indicate 90 DEGREES ±15 MINUTES.	This switch selects an internally generated reference signal for presentation on HEADING and ERROR readout.	Replace defective switch 1S9, transformer 1T2, angle indicator amplifier 1A7, or angle indicator 1A8.
6 Part II	READOUT SELECT to 0.	HEADING and ERROR readout shall indicate 0 DEGREES ±15 MINUTES.	This switch selects an internally generated reference signal for presentation on HEADING and ERROR readout.	Replace defective switch 1S9.
7 Part I	800-Cycle Index Error Test E1 NORM. -REV. to E1 REV. E2 NORM. -REV. to OFF. El VOLTS controls to 90-10-0. READOUT SELECT to F. V. F. V. SELECT to 2. Adjust VOLTS ADJUST control until EXC VOLTS meter indicates 23.5 volts , S1 to 1, 2, and 3. Record ERROR readout indication at each position.	HEADING readout shall indicate 0, 120, and 240 DEGREES	Field Tester supplies magnetic heading information for 800-cycle control transformer and null detection circuits in angle indicator and angle indicator amplifier.	Replace defective switch 1S8, angle indicator amplifier 1A7, angle indicator 1A8, or Field Tester. Perform Field Tester a-c continuity check in accordance with paragraph 7-7A.

TABLE 7-2A. FLIGHT LINE CERTIFICATION PROCEDURE (CONT)

Step	Procedure	Normal Indication	Circuit or Function Tested	If Indication Is Abnormal
7 Part II	El NORM. -REV. to E1 NORM. Record ERROR readout indication.	HEADING readout shall indicate 60 DEGREES.		
1 Part III	S1 to 1 and 2. Record ERROR readout indication at each position.	HEADING readout shall indicate 180 and 300 DEGREES.		
7 Part IV	Add the six recorded errors algebraically and divide the sum by six.	Resultant index error shall not exceed 0 ± 3 minutes.		
8 Part I	<u>400-Cycle Accuracy and Repeatability Test</u> POWER ON-OFF to POWER OFF. Disconnect Field Tester cable W4 from Console. Connect synchro standard to 1J4 EXT CX & TEST pins as follows: S1 BLU to A S2 BLK to C S3 YEL to B R1 RED to D R2 BLK to E E1 NORM. -REV. to OFF. READOUT SELECT to EXT CX. POWER ON-OFF to POWER ON. Set synchro standard to increasing 15-degree increments through 360 degrees. Record ERROR readout indication at each setting.	HEADING and ERROR readout indications shall not exceed ±6 minute cliff erenc e from synchro standard settings.	Synchro standard supplies heading information for 400-cycle control transformer in angle indicator and angle indicator amplifier.	Replace defective switch 1S9, angle indicator amplifier 1A7, or angle indicator 1A8.

TABLE 7-2A. FLIGHT LINE CERTIFICATION PROCEDURE (CONT)

Step	Procedure	Normal Indication	Circuit or Function Tested	If Indication Is Abnormal
8 Part II	Set synchro standard to decreasing 15-degree increments through 360 degrees. Record ERROR readout indication at each setting.	ERROR readout indications recorded at each setting shall be within ±2 minutes of those recorded in part I of this step.		
9	Monitor Telescope Alignment Test POWER ON-OFF to POWER OFF. Disconnect synchro standard from Console. Set up and level Monitor on Tripod. Rotate Monitor to sight any distant target. Read and record bearing indicated on azimuth scale. Rotate telescope 180 degrees in vertical plane. Rotate Monitor to sight same target. Read and record bearing indicated on azimuth scale. Compute difference of the two recorded bearings.	Computed difference shall be 180 degrees ±1 minute.	Alignment of telescope with respect to azimuth scale.	Replace defective Monitor.
10 Part I	Monitor Magnetic Alignment Test **Note** All remaining tests shall be performed in an area that has been surveyed.	Index error shall be 0 ± 6 minutes.	Monitor magnetic sensing element.	Demagnetize Monitor magnetic sensing element in accordance with paragraph 6-8. Perform crosshair test in accordance with paragraph 7-7C.

TABLE 7-2A. FLIGHT LINE CERTIFICATION PROCEDURE (CONT)

Step	Procedure	Normal Indication	Circuit or Function Tested	If Indication Is Abnormal
10 Part 1 (cont)	Set up and level Turntable at Turntable location established during survey. Mount magnetic azimuth reference detector (MARD) on Turntable as shown in figure 7-2. Connect cable W2 between 1J3 MONITOR and 4J1 of Turntable: READOUT SELECT to F. V. POWER ON-OFF to POWER ON. Adjust VOLTS ADJUST control until EXC VOLTS met er indicates 23.5 volts. Rotate Turntable until HEADING and ERROR readout indicates 0 DEGREES ± 10 MINUTES. Record ERROR readout indication. Set azimuth scale to 0 degree. Rotate Turntable to headings of 90, 180, and 270 degrees. Record ERROR readout indication at each heading. Add the four errors algebraically and divide the sum by four. Record this value as index error (I_1). Rotate Turntable to-sight a vertical target at a distant e of at least 1/2 mile. Read and record azimuth scale indication as target bearing (B). Note Target elevation must be within ±5 degrees of horizontal. Use plumb line or corner of building.			Perform telescope elevation tracking test in accordance with paragraph 7-7D. Replace defective Monitor.

TABLE 7-2A. FLIGHT LINE CERTIFICATION PROCEDURE (CONT)

Step	Procedure	Normal Indication	Circuit or Function Tested	If Indication Is Abnormal
10 Part I (cont)	**CAUTION** POWER MUST BE REMOVED DURING THE FOLLOWING OPERATION IF CONNECTOR OF MAGNETIC AZIMUTH REFERENCE DETECTOR IS DISCONNECTED. Remove MARD from top of Turntable plate and mount upside down so that telescope is below Turntable plate. Rotate Turntable to sight same target. Set azimuth scale to target bearing (B). Rotate Turntable to heading of 0, 90, 180, and 270 degrees. Record ERROR readout indication at each heading. **Note** Disregard HEADING readout indications. Add the four errors algebraically and divide the sum by four. Record this value as index error (I_2). **Note** The remainder of this step must be completed witbin 30 minutes to minimize errors due to shifting of earth's magnetic field.			

TABLE 7-2A. FLIGHT LINE CERTIFICATION PROCEDURE (CONT)

Step	Procedure	Normal Indication	Circuit or Function Tested	If Indication Is Abnormal
10 Part I (cont)	Determine and record the true magnetic bearing of target (B_{MAG}) by solving the following equation: $B_{MAG} = B + \frac{(I_1 - I_2)}{2}$ POWER ON-OFF to POWER OFF. Disconnect cable W2 from Turntable and Console. Without moving Tripod, remove Turntable from Tripod. Set up and level Monitor on Tripod as shown in figure 7-2. Connect cable W3 between 1J3 MONITOR and Monitor. POWER ON-OFF to POWER ON. Rotate Monitor to sight same target. Set azimuth scale to recorded true magnetic bearing of target (B_{MAG}). Rotate Monitor to headings of 0, 90, 180, and 2'70 degrees. Record ERROR readout indication at each heading. Determine the index error by adding the four errors algebraically and dividing the sum by four.			
10 Part II	Determine the 1-cycle error by subtracting the error at 180 degrees algebraically from the error at 0 degrees.	1-Cycle error (0-180) shall be 0 ± 6 minutes.		

TABLE 7-2A. FLIGHT LINE CERTIFICATION PROCEDURE (CONT)

Step	Procedure	Normal Indication	Circuit or Function Tested	If Indication Is Abnormal
10 Part III	Determine the 1-cycle error by subtracting the error at 270 degrees algebraically from the error at 90 degrees.	l-Cycle error (90-270) shall be 0 ± 6 minutes.		
11 Part I	E1-E2 Check Test El NORM. -REV. to E1 NORM. E2 NORM. -REV. to E2 NORM. E1-E2 CHECK to E1 CHECK.	E1 CHECK indicater shall light.	This indicator verifies that E1-E2 CHECK switch is in E1 CHECK position.	Replace defective lamp 1DS4 or switch 1S3.
11 Part II	READOUT SELECT to 90. Rotate AREA COMP vernier control to 500. Adjust El CHECK vernier control until NULL INDICATOR indicates a null.	NULL INDICATOR shall indicate a null.	Earth's magnetic field strength at Monitor location is determined by application of E1 voltage to leg A of Monitor.	Replace defective variable resistor 1R5, meter 1M3 or Monitor. (Applicable to Part No. 2592080-8.) Replace de-f ective variable resistor 1R7, resistor 1R55 or 1R56.
11 Part III	E1-E2 CHECK to E2 CHECK.	E2 CHECK indicater shall light.	This indicator verifies that E1-E2 CHECK switch is in E2 CHECK position.	Replace defective lamp 1DS5 or switch 1S3.
11 Part IV	Adjust E2 CHECK vernier control until NULL INDICATOR indicates a null.	NULL INDICATOR shall indicate a null.	Earth's magnetic field strength at Monitor location is determined by application of E2 voltage to leg A of Monitor.	Replace defective variable resistor 1R6, resistor 1R57 or 1R58.
12	Manual and Electrical Swing Test E1-E2 CHECK to OFF. E1 and E2 NORM. -REV. to OFF. POWER ON-OFF to POWER OFF.	Corrected manual swing error shall equal electrical swing error within 0 ± 6 minutes at each heading.	This test verifies correct operation of the Compass Calibrator and proper calibration of the Monitor, Console, and MARD.	Replace defective switch 1AT1, 1AT6, 1AT7, 1AT8, 1S4, 1S5, or 1S6.

TABLE 7-2A. FLIGHT LINE CERTIFICATION PROCEDURE (CONT)

Step	Procedure	Normal Indication	Circuit or Function Tested	If Indication Is Abnormal
12 (cont)	Set up and level Monitor and Turntable at locations established during survey. Rotate Monitor to sight target established during area magnetic survey. Set azimuth scale to target bearing. Rotate Monitor to 0-degree heading. Mount MARD on Turntable. Comect cable W3 between 1J3 MONITOR of Console and 3J1 of Monitor. Connect cable W2 between 1J2 TRANS of Console and 4J1 of Turntable. POWER ON-OFF to POWER ON. Adjust VOLTS ADJUST control until EXC VOLTS meter indicates 23.5 volts. MODE SELECTOR to CAL. READOUT SELECT to F. V. Rotate Turntable until HEADING and ERROR readout indicates 0 DEGREES ± 10 MINUTES. Record ERROR readout indication. **Note** The remainder of this step must be completed within 30 minutes to minimize errors due to shifting of earth's magnetic field. Set azimuth scale to 0 degree. Rotate Turntable to headings of 90, 180, and 270 degrees. Record ERROR readout indication at each heading.			

TABLE 7-2A. FLIGHT LINE CERTIFICATION PROCEDURE (CONT)

Step	Procedure	Normal Indication	Circuit or Function Tested	If Indication Is Abnormal
12 (cont)	Add the four errors algebraically and divide the sum by four. Record this value as MARD index error. Set MISAL polarity and MINUTES controls to value of MARD index error. Set AREA COMP vernier control to setting established during survey. Set E1 CHECK, E2 CHECK, A 180, and A270 controls to values marked on MARD. El NORM. -REV. to E1 NORM. E2 NORM. -REV. to E2 NORM. READOUT SELECT to 90. MODE SELECTOR to MON. E1-E2 CHECK to E1 CHECK. Adjust E1 VOLTS controls until NULL INDICATOR indicates a null. E1-E2 CHECK to E2 CHECK. Adjust E2 VOLTS controls until NULL INDICATOR indicates a null. E1-E2 CHECK to OFF. MODE SELECTOR to CAL. READOUT SELECT to F. V. Rotate Turntable to 0-degree heading.			

TABLE 7-2A. FLIGHT LINE CERTIFICATION PROCEDURE (CONT)

Step	Procedure	Normal Indication	Circuit or Function Tested	If Indication Is Abnormal
12 (cont)	Set HEADING SELECTOR to each position from 0 through 345 DEGREES. Record ERROR readout indication at each setting as electrical swing error. E1 and E2 NORM. -REV. to OFF. HEADING SELECTOR to 0 DEGREES. Rotate Turntable to 0- through 345-degree headings in 15-degree increments. Record ERROR readout indication at each heading as manual swing error. Add the manual swing errors at 0, 90, 180, and 270 degrees algebraically and divide the sum by four. Record this value as manual swing index error. Subtract the manual swing index error algebraically from each manual swing error. Record these values as corrected manual swing errors.			

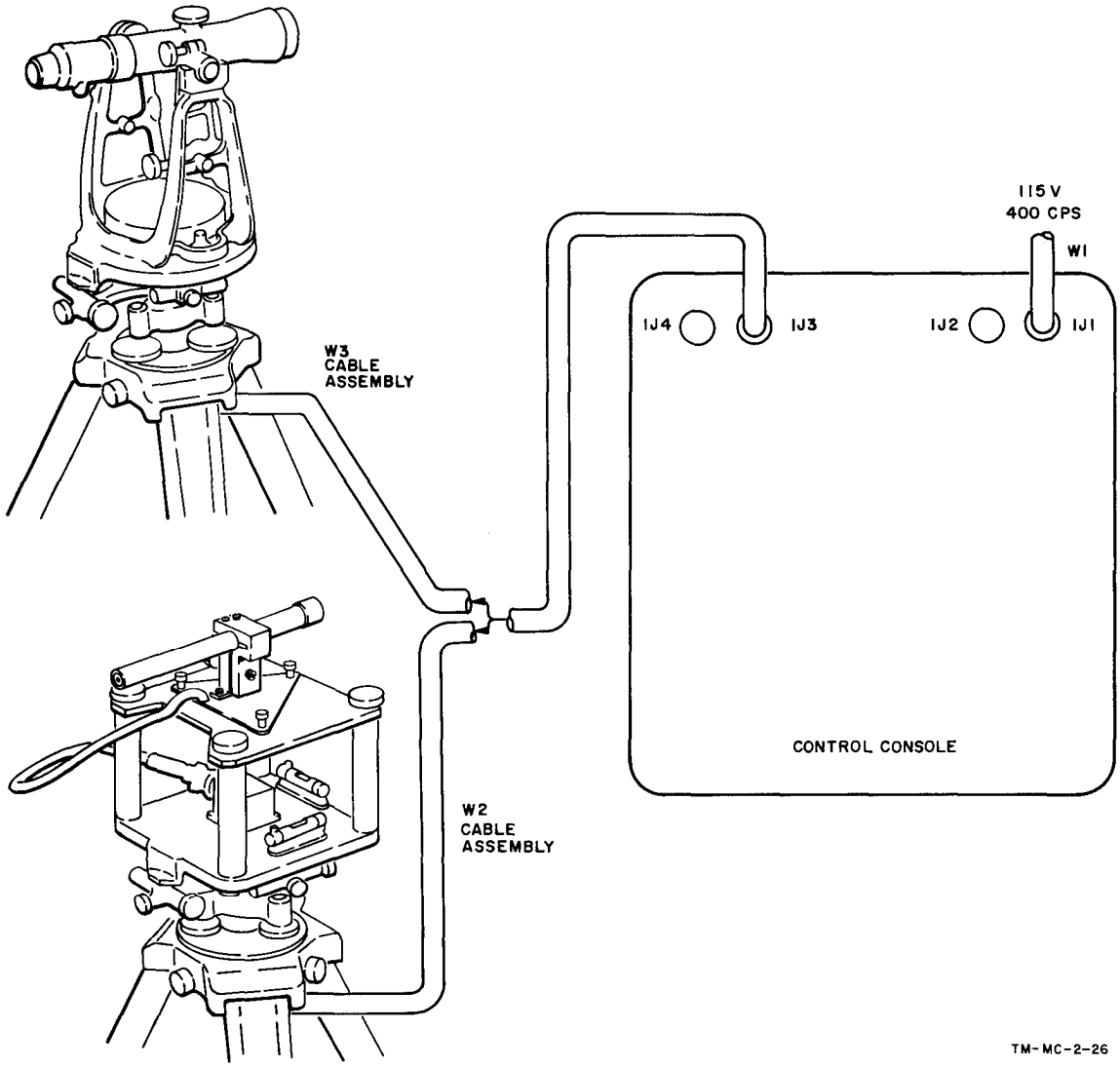

Figure 7-2. Test Setup for True Magnetic Alignment and Remote Transmitter Monitor Calibration

g. Invert magnetic azimuth reference detector on Turntable so that telescope is below the unit. To accomplish this inversion, remove the three magnatic azimuth reference detector mounting screws, place magnetic azimuth reference detector upside down so that telescope is below Turntable top mounting plate, and replace the mounting screws into the plate.

h. Sight the same target recorded in paragraph 7-7.f. Set Turntable azimuth scale to target bearing. Rotate Turntable to headings of 0, 90, 180, and 270 degrees. Record error at each heading. Calculate algebraic average index error (I_2) as in Steps 7-7.e, and record this value.

Note

With the inversion fixture inverted, readout error at a 90-degree Turntable heading will be read at about 270 DEGREES on the readout ; at a 270-degree Turntable heading, readout error will be read at about 90 DEGREES on the readout.

i. True magnetic bearing of target (B_{MAG}) is bearing (B) of step 7-7.f plus (index error o step 7-7.e (I_1) minus error of step 7-7.h (I_2), divided by two) :

$$B_{MAG} = B + \frac{(I_1 - I_2)}{2}$$

j. Replace Turntable with Monitor to be tested, without moving Tripod. (See figure 7-2.) Sight target with Monitor and set azimuth scale to bearing (B_{MAG}) of step 7-7.~~f~~ i.

k. Rotate Monitor to headings of 0, 90, 180, and 270 degrees and record READOUT ERROR at each heading. Subtract the indicator index error of step 2, Part VII of table 7-2. Calculate monitor index error as in step 7-7.e. This index error is the difference between the optical axis of the Monitor telescope and the magnetic axis of the Monitor transmitter. This error shall be equal to or less than 6 minutes.

1. If this error exceeds 6 minutes, return Monitor to depot for repair and calibration.

Note

Step 7-7.k shall be completed within 30 minutes of step 7-7.i to minimize errors due to shifting of the earth's magnetic field.

7-7A. FIELD TESTER A-C CONTINUITY CHECK.

a. Using Flux Valve Continuity Checker, (Continuity Checker, figure 2-1) connect power cable supplied with Continuity Checker to pins 1 and 2 of the rear panel 8-pin connector and to a 115-volt ac, 400-cycle, single phase power supply.

CAUTION

Never use a d-c ohmmeter to check valve assembly continuity.

b. Connect test leads supplied with Continuity Checker to GRD and CONT connectors on front panel.

c. Turn Continuity Checker selector switch knob to A-CONT position.

d. Connect uninsulated portion of Continuity Checker test probes together and turn variable resistor knob until fullscale reading, zero ohms, is indicated on meter.

WARNING

Handle probes by insulated portion only.

e. Connect Continuity Checker GRD test probe to common connection of the three secondary (pick-up) coils of the valve assembly (pin F of Field Tester connector P2).

f. Use Continuity Checker CONT test probe to check continuity of secondary coils. When the CONT probe makes connection with pin A, B, or C of Field Tester connector P2, the meter shall indicate 10 to 52 ohms.

g. Connect the GRD test probe to pin E of Field Tester connector P2, and the CONT probe to pin D of Field Tester connector P2 with Tester switch S4 set to INDEX, to check continuity. The meter shall indicate 500 to 3000 ohms.

CAUTION

Return variable resistor knob to OFF position after each test, and before disconnecting power cable. This will preclude possibilities of magnetizing the valve assembly and causing consequent inaccuracies in its operation.

7-7B. FIELD TESTER D-C CONTINUITY CHECK. Ensure that the Tester is disconnected from any other equipment, connect the multimeter across the check points of table ~~7-2A,~~ set multimeter to ohms scale, and check for resistance as listed for the designated settings. 7-2B

7-7C. CROSS HAIR CALIBRATION. To determine that the cross hairs in the telescope are vertical, perform the following operations:

a. Mount the magnetic azimuth reference detector with the telescope up on the Turntable and tighten mounting screws.

b. Carefully level the Turntable, noting that the bubbles remain centered for complete rotation of the Turntable.

c. Sight a vertical target a convenient distance away. The recommended target is a plumb bob line; however, a corner of a building may be used.

d. The cross hair shall coincide with the line over the entire visible distance.

7-7D. TELESCOPE ELEVATION TRACKING. To check the vertical tracking of the magnetic azimuth reference detector telescope, perform the following operations:

a. Mount the Monitor on the tripod and carefully level.

b. Using the target determined in 7-7C.c, sight a point 5 degrees below horizontal with the vertical scale of the Monitor and mark this point.

TABLE 7-2. FIELD TESTER CONTINUITY AND RESISTANCE TEST

From Ckt Pt	To Ckt Pt	Switch Positions S1	S2	S3	Multimeter Resistance Range	Resistance Value (ohms)
J1-A	J1-B	-	-	-	X1	0 - 0.1
J1-A	J1-C	-	-	-	X1	0 - 0.1
J1-F	J2-T	-	-	-	X1	0 - 0.1
J2-B	J2-N	-	-	-	X1	0 - 0.1
J2-H	J3	OFF	E1	-	X1	0 - 0.1
J2-G	J4		E1	-	X1	0 - 0.1
J2-K	J3		E2	-	X1	0 - 0.1
J2-J	J4		E2	-	X1	0 - 0.1
J2-H	J3	OFF	E1/E2	-	X1	0 - 0.1
J2-K	J4		E1/E2	-	X1	0 - 0.1
J3	J4		E1	E1	X10,000	18K±1.8K
J2-K	J4		E1	E2	X10,000	56K±5.6K
J2-H	J2-A	1	-	OFF	X10,000	100K±10K
J2-H	J2-C	2	-	-	X10,000	100K±10K
J2-H	J2-B	3	-	-	X10,000	100K±10K
J2-C	J2-F	1	-	-	X1	0 - 0.1
J2-G	J2-F	2	-	-	X1	0 - 0.1
J2-G	J2-F	3	-	-	X1	0 - 0.1
J2-S	J1-F	DEMAG	-	-	X1	77±7.7

c. Rotate the telescope of the Monitor to sight a point 5 degrees above horizontal and mark this point.

d. Replace the Monitor with the Turntable and magnetic azimuth reference detector as in step 7-7C.a.

e. Level the Turntable and sight the point 5 degrees below horizontal determined in step c above. Lock both motions of the Turntable and record the azimuth bearing.

f. Rotate only the telescope of the magnetic azimuth reference detector to sight the elevation of the point 5 degrees above horizontal with the horizontal cross hair.

g. Using the upper motion vernier of the Turntable, rotate the unit until the vertical cross hair is coincident with the point and record the azimuth bearing. This bearing shall be within 3 minutes of the bearing determined in step 7-7D.e.

7-8. Set POWER ON-OFF switch of Console to POWER OFF. Disconnect and dismantle all equipment and store cables in their proper compartments.

(Applicable to Part No. 2592080-2, -4, and -5.)

7-9. OPERATIONAL TESTS.

7-10. Perform the following flight line and Console certification procedures to determine if Compass Calibrator is operational.

(Applicable to Part No. 2592080-2, -4, and -5.)

7-11. FLIGHT LINE CERTIFICATION PROCEDURE. Conduct parallel alignment of the levels of the Monitor and Turntable as follows:

a. Mount Monitor or Turntable on Tripod.

b. Level unit approximately. Unlock upper and lower motions.

c. Using one level only, level table precisely at one position.

d. Rotate Turntable 180 degrees and read level.

e. If level shows error, take out one-half error with turntable leveling screws; take out one-half error with small level adjustment screw found under one end of the level.

f. Rotate Turntable to original position and read level.

g. If level shows error, repeat above steps until parallel alignment of levels is precise.

h. Repeat steps c through g for other level.

i. Lock upper and lower motions.

(Applicable to Part No. 2592080-2,-4, and-5.)

7-12. MONITOR TELESCOPE ALIGNMENT PROCEDURE.

a. Set up Monitor for normal operation.

b. Loosen upper motion and sight through telescope on any distant target. Lock upper motion.

c. Read and record bearing on A index of Monitor azimuth scale.

d. Rotate telescope 180 degrees in vertical plane (telescope level now on top of telescope).

e. Loosen lower motion. Rotate Monitor 180 degrees and sight on same target. Lock lower motion.

f. Read and record bearing on A index of Monitor azimuth scale.

g. The difference of the readings in steps c and f should be 180 degrees ±1 minute.

h. If the results of step g are out of tolerance, return Monitor to depot for repair.

(Applicable to Part No. 2592080-2,-4, and-5.)

7-13. CERTIFICATION OF CONSOLE.

a. Set up equipment according to instructions in paragraph 4-40 except for the following: Connect transmitter cable between TRANS connector 1J2 on Console and Monitor.

b. Since sensitive element in Monitor is not pendulous, tapping instrument before each reading is not necessary.

c. Set switches and controls of Console as follows:

MODE SELECTOR to CAL.
HEADING SELECTOR to 0 DEGREES.
E 1 NORM. -REV. to OFF.
E2 NORM. -REV. to OFF.
Δ180, Δ270, and MISAL controls to 0 MINUTES.
FV SELECT to 2.
READOUT SELECT to FV.

d. Rotate Monitor to obtain 0 DEGREES ±15 MINUTES on angle indicator readout. Set azimuth scale to 0. Record readout ERROR.

e. Rotate Monitor to headings of 90, 180, and 270 degrees. Record readout ERROR at each heading.

f. Compute average index error.

g. Subtract index error of step f algebraically from readings obtained in steps d and e.

h. Calibrate E1 VOLTAGE for the Monitor.

i. Change the following switches and controls:

E1 NORM. -REV. to E1 NORM.
HEADING SELECTOR to 90 DEGREES.
READOUT SELECT to 90.

j. Set Monitor to a 0-degree heading and adjust E1 VOLTAGE controls to null the NULL INDICATOR.

k. Record E1 VOLTAGE control reading.

l. Set Monitor to 180 degrees and E1 NORM. -REV. switch to E1 REV.

m. Adjust E1 VOLTAGE controls to null the NULL INDICATOR.

n. Record E1 VOLTAGE control reading.

o. Average the readings obtained in steps k and n.

p. Set E1 VOLTAGE control to value obtained in step o.

q. Calibrate E2 VOLTAGE for Monitor.

r. Set Monitor to 90 degrees, E1 switch to OFF, E2 switch in REV, and READOUT SELECT to 0.

s. Adjust E2 VOLTAGE controls to null the NULL INDICATOR.

t. Record E2 VOLTAGE control reading.

u. Set Monitor to 270 degrees and E2 NORM. -REV. to E2 NORM.

v. Adjust E2 VOLTAGE control to null the NULL INDICATOR.

w. Record E2 VOLTAGE control reading.

x. Average the readings obtained in steps t and w.

y. Set E2 VOLTAGE controls to value obtained in step x.

z. Calibrate Δ160 and Δ270 settings.

as. Set E1 and E2 switches to NORM. and Monitor to 0 degrees.

ab. Set index error computed in step f in on the MISAL dial.

ac. Conduct a four-heading electrical swing as in paragraph 4-50.e.

ad. Subtract error at 180 degrees obtained in step g from error at 180 degrees obtained in step ac: $(180_{ac} - 180_{g})$.

ae. Repeat step ad for 90-degree errors.

af. Repeat step ad for 270-degree errors.

ag. Add results of steps ae and af.

ah. Set Δ180 control to value obtained in step ad.

ai. Set Δ270 control to value obtained in step ag.

aj. Perform a 24-heading electrical swing using the Monitor. Refer to paragraph 4-50.

ak. Set El and E2 to OFF.

al. Perform a 24-heading manual swing using the Monitor instead of the Turntable. Refer to paragraph 4-41.

am. Compute the average Monitor index error for 0-, 90-, 180-, and 270-degree computed headings and subtract algebraically from readings obtained in step al. Refer to paragraph 4-50.

an. Compare corrected manual readings obtained in step am with respective electrical readings obtained in step aj. The differences should not exceed 8 minutes on any heading. However, one heading may exceed 6 minutes if the average deviation is 4 minutes or less.

Note

These tests shall be performed within a period of 30 minutes or less. By completing the test in as short a period of time as possible, the diurnal effect (daily shift in magnetic field) will be minimized. The test shall be performed in an area free of magnetic disturbances. As the test is repeated from time to time using the same Monitor, the Δ180 and Δ270 readings should remain fairly constant (within 6 minutes).

ao. If the results in step ap are out of tolerance, return Console to depot for repair.

ap. After performing the 24-heading swing, check MISAL, Δ270, and Δ180 switches as directed in table 7-3.

TABLE 7-3. MISAL Δ180 AND Δ270 CIRCUIT TESTS

Step	Procedure	Normal Indication	Circuit or Function Tested	If Indication Is Abnormal
1 Part I	MISAL Circuit Test Connect Console and Monitor as in paragraph 4-12. d. El NORM. -REV. switch to El NORM. E2 NORM. -REV. switch to E2 NORM. HEADING SELECTOR to O DEGREE. MODE SELECTOR to CAL. Monitor to a 0-degree heading. READOUT SELECT to FV. FV SEL to 1 or 2. Null the NULL INDICATOR with E1 VOLTS and vernier controls. MISAL MINUTES switch to 0. MISAL polarity switch to ±MISAL. Record initial readout ERROR. While observing ERROR readout, rotate the MISAL MINUTES switch clockwise from 0 to 120 MINUTES. Record final ERROR indication.	ERROR readout shall drive negatively in increments each time switch is moved, with a final readout of 120 ± 6 MINUTES more negative than initial recorded reading in this step.	MINUTES switch is rotated through each of its series resistors to detect an open resister or contact. A 120-MINUTE ERROR is switched into the circuit at full rotation of MINUTES switch.	Check circuit wiring. Check polarity switch and replace if defective. Clean MINUTES switch contacts. Replace defective MINUTES switch.
1 Part II	MISAL polarity switch to -MISAL. MISAL MINUTES switch to 0.	ERROR readout shall drive to a final readout of 120 ± 6 MINUTES more positive than initial recorded reading.	The negative polarity switch position is checked for good contact and action.	Replace polarity switch.

TABLE 7-3. MISAL Δ180 AND Δ270 CIRCUIT TESTS (cont)

Step	Procedure	Normal Indication	Circuit or Function Tested	If Indication Is Abnormal
2 Part I	Δ270 Circuit Test Same as step 1, part I except: HEADING SELECTOR to 90 DEGREES. Δ270MINUTES switch to 0. Δ270 polarity switch to +Δ270. Record initial ERROR. Rotate Δ270MINUTES switch clockwise from 0 to 60 MINUTES.	Same as step 1, part I except: Readout shall show a final reading of 30 ± 3 minutes more negative than initial recorded reading of this step.	Same as step 1, part I except: A 30-MINUTE ERROR is switched into circuit at full switch rotation.	Same as step 1, part I.
2 Part II	Δ270 polarity switch to −Δ270. Δ270MINUTES switch to 0.	ERROR readout shall drive to a final readout of 30 ± 3 MINUTES more positive than initial recorded reading.	Same as step 1, part II.	Same as step 1, part II.
3 Part I	Δ180 Circuit Test Same as step 2, part I except: Applicable to Δ180 switches. HEADING SELECTOR to 180 degrees.	Same as step 2, part I except: Readout shall show a final reading of 60 ± 4 MINUTES more negative than initial recorded reading of this step.	Same as step 2, part I.	Same as step 2, part I.
3 Part II	Δ180 polarity switch to −Δ180. Δ180MINUTES switch to 0.	ERROR readout shall drive to a final reading of 60 ± 4 MINUTES more positive than initial recorded reading.	Same as step 2, part II.	Same as step 2, part II.

SECTION VIII

MAGNETIC COMPASS CALIBRATOR SET ADAPTER KIT MK-1040A/ASN

8-1. Purpose and Use

a. Magnetic Compass Calibrator Set Adapter Kit MK–1040A/ASN consists of mechanical adapters and adapter cables used with Magnetic Compass Calibrator Set AN/ASM–339 (V) 1 (compass calibrator), Sperry part No. 2592080–8, to perform an electrical compass swing. The mechanical adapters and adapter cables are used to adapt the compass calibrator to various aircraft and magnetic compass system configurations.

b. The mechanical adapters are used with Azimuth Telescope SU-45/ASM-339 (V) (part of compass calibrator) to align the aircraft compass transmitter magnetic axis with the aircraft centerline.

c. The adapter cables provide the electrical connection between the compass calibrator and the aircraft compass system being calibrated.

8-2. Technical Characteristics

The weight of the MK-1040A/ASN is approximately 38 pounds.

8-3. List of Components

Quantity	Nomenclature	Sperry part No.
1	Adapter Kit Case CY-6508/ASN	2592747
1	Compass Calibrator Set Adapter MX-8162/ASN	2592699
1	Compass Calibrator Set Adapter MX-8163/ASN	2592'710
1	Compass Calibrator Set Adapter MX-8164/ASN	2592721
1	Compass Calibrator Set Adapter MX-8165/ASN	2592725
1	Compass Calibrator Set Adapter MX-8166/ASN	2592734-901
1	Compass Calibrator Set Adapter MX-8167/ASN	2592738
1	Electrical Special Purpose Cable Assembly CX-10934/ASN	2582942
1	Branched Electrical Special Purpose Cable Assembly CX-10935/ASN	2592647
1	Electrical Special Purpose Cable Assembly CX-10936/ASN	2592729
1	Branched Electrical Special Purpose Cable Assembly CX-10937/ASN	2591786
1	Electrical Special Purpose Cable Assembly CX-10938/ASN	2581617
1	Electrical Special Purpose Cable Assembly CX-10939/ASN	2587151
1	Branched Electrical Special Purpose Cable Assembly CX-10940/ASN	2587152
1	Branched Electrical Special Purpose Cable Assembly CX-10941/ASN	2587153
1	Transmitter Mounting Plate MX-8112A/ASM-339 (V)	2582951
1	Turntable extension legs	2557345
2	Ring spacer (angular)	2557365
2	Ring spacer (flat)	2557364
6	Special bolt No. 4-40	1700924
2	Special bolt No. 2-56	2519197
1	Hardware container	2500420

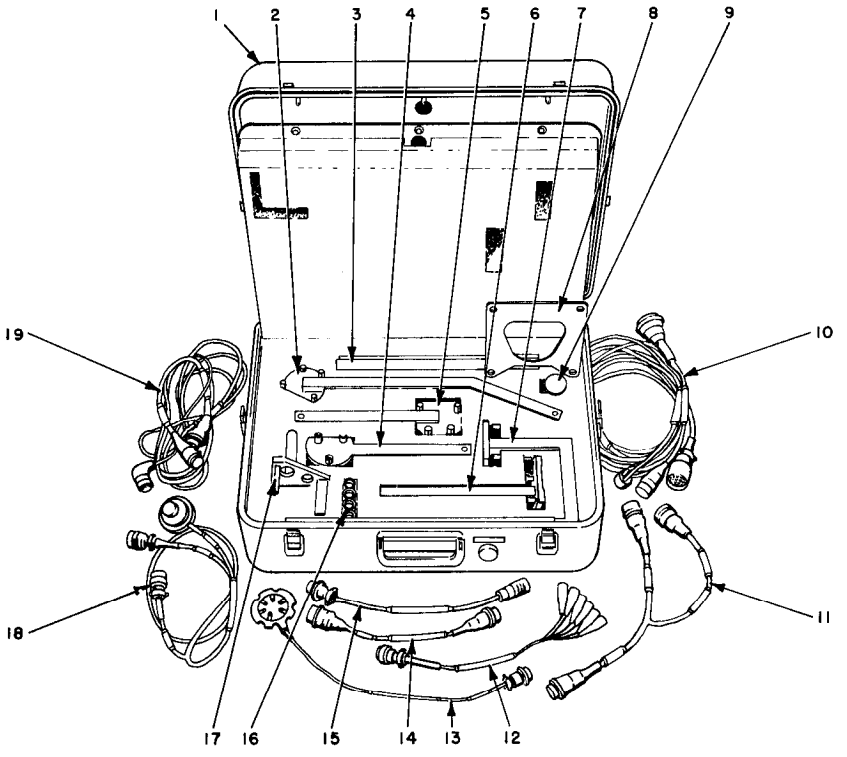

1. ADAPTER KIT CASE CY-6506/ASN
2. COMPASS CALIBRATOR SET AOAPTER MX-8165/ASN
3. FOUR TURNTABLE EXTENSION LEGS
4. COMPASS CALIBRATOR SET AOAPTER MX-6167/ASN
5. COMPASS CALIBRATOR SET AOAPTER MX-6166/ASN
6. COMPASS CALIBRATOR SET AOAPTER MX-6162/ASN
7. COMPASS CALIBRATOR SET AOAPTER MX-8164/ASN
8. TRANSMITTER MOUNTING PLATE MX-6112A/ASM-339(V)
9. HAROWARE CONTAINER (WITH 9 SPECIAL BOLTS)
10. BRANCHED ELECTRICAL SPECIAL PURPOSE CABLE ASSEMBLY CX-10935/ASN
II. BRANCHEO ELECTRICAL SPECIAL PURPOSE CABLE ASSEMBLY CX-10940/ASN
12. ELECTRICAL SPECIAL PURPOSE CABLE ASSEMBLY CX-10934/ASN
13. ELECTRICAL SPECIAL PURPOSE CABLE ASSEMBLY CX-10936/ASN
14. ELECTRICAL SPECIAL PURPOSE CABLE ASSEMBLY CX-10939/ASN
15. ELECTRICAL SPECIAL PURPOSE CABLE ASSEMBLY CX-10936/ASN
16. FOUR RING SPACERS
17. COMPASS CALIBRATOR SET ADAPTER MX-8163/ASN
16. BRANCHEO ELECTRICAL SPECIAL PURPOSE CABLE ASSEMBLY CX-10S37/ASN
19. BRANCHED ELECTRICAL SPECIAL PURPOSE CABLE ASSEMBLY CX-10941/ASN

EL4920-292-15-C2-TM-I

Figure 8-1. Magnetic compass calibrator set adapter kit MK-1040A/ASN.

8-4. Description of Equipment (fig. 8-1)

a. The MK-1040A/ASN includes six mechanical adapters (MX-8162/ASN, MX-8163/ASN, MX-8164/ASN, MX-8165/ASN, MX-8166/ASN, and MX-8167/ASN), a transmitter mounting plate (MX-8112A/ASM-339 (V)), four turntable extension legs, four ring spacers, and eight adapter cables (CX-10934/ASN, CX-10935/ASN, CX-10936/ASN, CX-10937/ASN, CX-10938/ASN, CX-10939/ASN, CX-10940/ASN, and CX-10941/ASN).

b. The mechanical adapters are used in a compass swing to align the compass transmitter with the aircraft centerline. These adapters are necessary to mount the telescope furnished with the compass calibrator to the compass transmitter. An adapter is provided for the compass transmitter installation in each type of aircraft listed in e below.

c. Transmitter Mounting Plate MX-8112A/ASM-339 (V), turntable extension legs, and ring spacers are used to mount Induction Compass Transmitter T-611/ASN or Remote Compass Transmitter ML-1 for calibration and optical transfer.

d. The adapter cables are used during the compass swing for interconnection of the compass calibrator with each compass system listed in e below.

e. The MK-1040A/ASN is used whenever the compass calibrator is used to electrically swing the following compass system/aircraft combinations:

Compass system	*Aircraft type*
AN/ASN-13 with Indicator ID-567	U-1A and U-8D.
AN/ASN-43 with Radio Magnetic Compass Indicator ID-998/ASN.	AH-1G, CH-47A, CH-54, UH-1B, UH-1C, UH-1D, UH-1H, and U-21.
AN/ASN43 with Heading-Radio Bearing Indicator ID-1351/A.	OH-6A.
C-12	U-1A, U-6, and U-8D.
J-2 with Radio-Magnetic Compass Indicator ID-998/ASN.	CH-47A, UH-1B, UH-1C, U-1A, U-6, and U-8D.
MA-1	OV-1 and U-8.

8-5. Description of Major Units

a. Description of Compass Calibrator Set Adapters.

(1) The MX-8162/ASN is used to attach the telescope to Induction Compass Transmitter DT-309/AJN or T-611/ASN used in U-1A, U-6, U-8D, and U-21 aircraft.

(2) The MX-8163/ASN is used to attach the telescope to Induction Compass Transmitter T-611/ASN used in CH-54 aircraft.

(3) The MX-8164/ASN is used to attach the telescope to Induction Compass Transmitter T-611/ASN used in AH-1G, UH-1B, UH-1C, UH-1D, and UH-1H aircraft.

(4) The MX-8165/ASN is used to attach the telescope to Induction Compass Transmitter T-611/ASN used in OH-6A aircraft equipped with a Particle Separator Donaldson Filter. (This adapter will not function in OH-6A aircraft equipped with the Michigan Dynamics Incorporated Barrier Filter.)

(5) The MX-8166/ASN is used to attach the telescope to Induction Compass Transmitter T–611/ASN used in CH-47 and CH-47A aircraft.

(6) The MX-8167/ASN is used to attach the telescope to Remote Compass Transmitter ML-1 used in OV-1 aircraft.

b. Description of Electrical Special Purpose Cable Assemblies.

(1) The CX-10934/ASN is used to adapt the compass calibrator to Remote Compass Transmitter ML-1 for calibration.

(2) The CX-10935/ASN is used to adapt

the compass calibrator to compass systems with Radio-Magnetic Compass Indicator ID-998/ASN for electrical compass swing.

(3) The CX-10936/ASN is used to adapt the compass calibrator to Induction Compass Transmitter T-611/ASN for one-cycle error compensation.

(4) The CX-10937/ASN is used in conjunction with the CX-10936/ASN to adapt the compass calibrator to Compass System AN/ASN-13 with Indicator ID-567, and to Gryomagnetic Compass Set AN/ASN-43 with Heading-Radio Bearing Indicator ID-1351/A, for electrical compass swing.

(5) The CX-10938/ASN is used to adapt the compass calibrator to aircraft with Gryoscopic Compass System C-12 for electrical compass swing.

(6) The CX-10939/ASN is used to adapt the compass calibrator to aircraft with Compass System MA-1 for one-cycle error compensation,

(7) The CX-10940/ASN is used in conjunction with CX-10941/ASN to adapt the compass calibrator to aircraft with Compass System MA-1 for electrical compass swing,

(8) The CX-10941/ASN is used in conjunction with CX-10940/ASN to adapt the compass calibrator to aircraft with Compass System MA-1 for electrical compass swing.

8-6. Description of Minor Assemblies

a. Adapter Kit Case CY-6508/ASN is of aluminum construction and contains all the assemblies of the MK-1040A/ASN.

h. Transmitter Mounting Plate MX-8112A/ASM-339 (V) is of aluminum construction. This plate is used to mount Induction Compass Transmitter T-611/ASN used in CH-54 and UH-1 aircraft during calibration.

c. The aluminum angular ring spacers and flat ring spacers are used to provide a 6° pitch-up position of Remote Compass Transmitter ML-1 used in OV-1 aircraft during calibration and optical transfer.

d. The aluminum turntable extension legs raise the height of the MX-8112A/ASM-339 (V) to allow the MX-8163/ASN and the MX-8164/ASN to be attached to Induction Compass Transmitter T-611/ASN used in CH-54, AH-1G, and UH-1 aircraft.

e. Magnetic Compass Calibrator Set AN/ASM-339 (V) 1.

f. Measuring tape.

g. Power source: 28 volts dc, 5 amperes minimum.

h. Aircraft stand or ladder that will reach compass transmitter location.

SECTION IX

OPERATING INSTRUCTIONS FOR ELECTRICAL COMPASS SYSTEM CALIBRATION

9-1. General

a. The electrical compass system calibration is a two-part procedure: part one consists of an area magnetic survey, and part two consists of an electrical compass swing. An area magnetic survey is the selection of a proper area to be used as a compass swing site, The survey must establish the magnetic acceptability of the area, a north-south reference line for aligning the aircraft, and the location of the turntable assembly and the monitor assembly for each aircraft type to be calibrated. The survey is to be performed annually, and as necessary to add turntable assembly locations to accommodate new aircraft types. Operating instructions for an area magnetic survey are contained in paragraphs 4-7 through 4-35.

NOTE

An area magnetic survey must be performed prior to an electrical compass swing.

b. An electrical compass swing is performed to calibrate and insure the accurate performance of the aircraft compass system, This section describes the necessary procedures using the compass calibrator with the MK-1040A/ASN.

9-2. Equipment Required

a. The equipment listed below is required to perform an electrical compass swing.

(1) Magnetic Compass Calibrator Set AN/ASM-339 (V) 1.

(2) Magnetic Compass Set Adapter Kit MK-1040A/ASN.

(3) Measuring tape.

(4) Power source: 28 volts dc, 5 amperes minimum.

(5) Aircraft stand or ladder that will reach compass transmitter location.

b. Table 9-1 lists the nomenclature and common names for the compass calibrator and its components.

9-3. Equipment Setup

a. Remove the following equipment from the compass calibrator case:

(1) Tripod (two required).

(2) Magnetic field monitor.

(3) Remote transmitter turntable.

(4) Control console.

(5) 400-cycle power supply.

(6) Alignment equipment.

(7) Cable (W1) and reel.

(8) Cable (W2) and reel.

(9) Cable (W3) and reel.

b. Place one tripod over the turntable location for the aircraft being calibrated (established during area magnetic survey). Adjust the legs to convenient operator height.

c. Remove the turntable assembly from the case and mount it on the tripod.

d. Place the second tripod over the monitor location (established during area magnetic survey). Adjust the legs to convenient operator height.

e. Remove the monitor assembly from the case and mount it on the tripod.

f. Place the control console within 10 to 40 feet of the turntable location.

g. Place the 400-cycle power supply 80 feet, or more, away from the other equipment.

h. Unreel cable (WI) and connect it as follows :

(1) W1P1 to 1J1 POWER of control console.

(2) W1P2 to J805 of 400-cycle power supply.

i. Unreel cable (W2) and connect it as follows :

(1) W2P1 to 1J2 TRANS of control console.

(2) W2P2 to 4J1 (bottom connector) of turntable assembly.

j. Level the turntable assembly, Check the bubble level by rotating the turntable assembly 180". If the bubble goes off center by more than one division, take out half of unlevel with leveling screws, and half by adjusting the level itself.

k. Unreel cable (W3) and connect it as follows :

(1) W3P1 to 1J3 MONITOR of control console.

(2) W3P2 to 3J1 (bottom connector) of monitor assembly.

l. Level the monitor assembly according to procedures given in j above.

m. Set the control console switches and controls to OFF or 0, or fully counterclockwise.

n. Connect J803 of the 400-cycle power supply to 28-volt dc power source.

9-4. Mounting Compass Transmitter on Turntable Assembly

The procedures given in pargraphs 9-4, 9-5 and 9-6 are required for calibration of existing compass transmitters that are not precali-

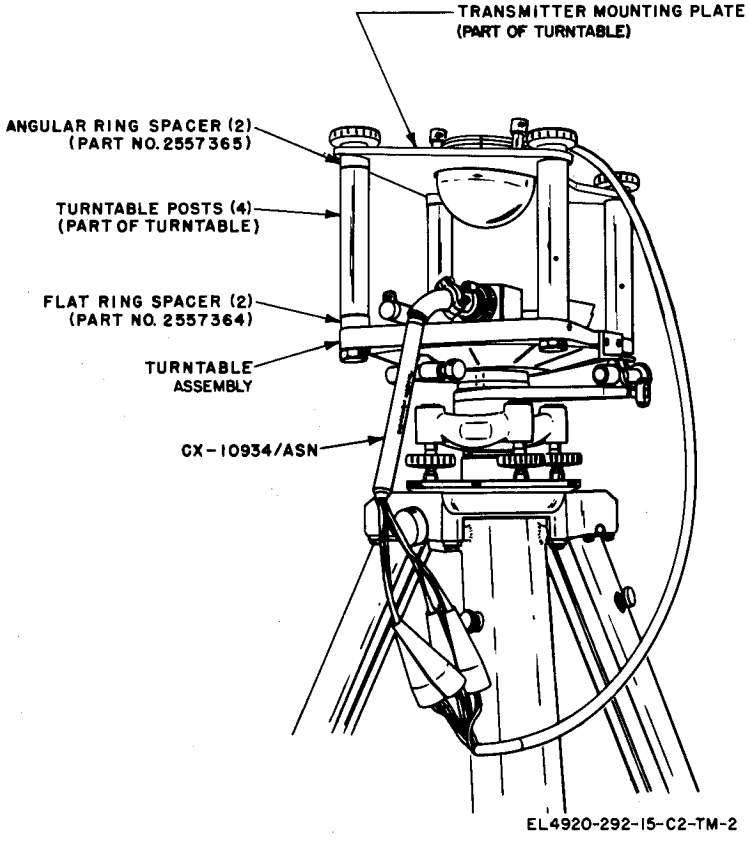

Figure *9-1, Remote Compass Transmitter ML-1 mounted on turntable assembly for OV-1 aircraft.*

brated or preindexed. The compass calibrator is designed to simplify calibration procedures through the application of compass transmitters that are preindexed or precalibrated. A preindexed compass transmitter eliminates the optical transfer procedure described in paragraph 9-6. A precalibrated compass transmitter eliminates the calibrating and optical transfer procedures described in paragraphs 9-4, 9-5 and 9-6. Until preindexed or precalibrated compass transmitters are available for the applicable aircraft, the complete procedure described in this manual must be performed to accurately calibrate the compass system. Mount the compass transmitter on the turntable assembly in accordance with *a, b, c,* or *d* below.

NOTE

Part numbers shown in parentheses throughout this section are Sperry part numbers for parts which have no other identification.

a. Mount Remote Compass Transmitter ML-1, used in OV-1 aircraft in accordance with figure 9-1 and the following instructions:

(1) Remove the following equipment from the MK-1040A/ASN:

(a) CX-10934/ASN (W17 cable).

(b) Two angular ring spacers (part No. 2557365).

(c) Two flag ring spacers (part No. 2557364).

(2) Insert the flat spacers under the front posts of the turntable assembly, and the angular spacers on top of the posts but under the front of the transmitter mounting plate (part No. 2580974). The result should be a 6° incline from rear to front.

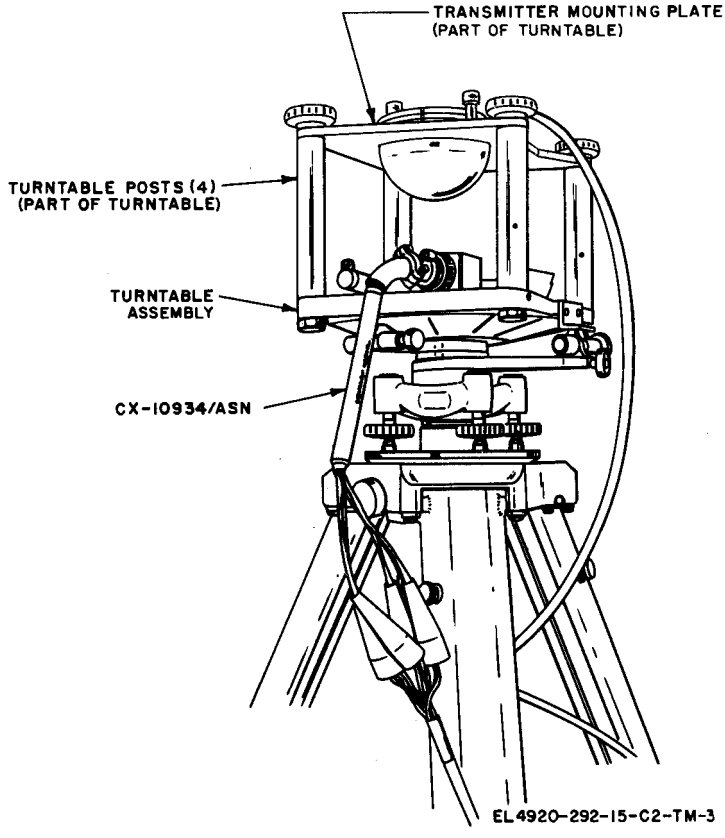

Figure 9-2. Remote Compass Transmitter ML-1 mounted on turntable assembly for U-S aircraft.

(3) Mount the ML-1 on the transmitter mounting plate.

(4) Connect the CX-10934/ASN to the top connector of the turntable assembly.

(5) Connect CX-10934/ASN clips to like-colored ML-1 leads.

b. Mount Remote Compass Transmitter ML-1, used in U-8 aircraft, in accordance with figure 9-2 and the following instructions:

(1) Remove CX-10934/ASN (W17 cable) from the MK-1040A/ASN.

(2) Mount the ML-1 on the transmitter mounting plate.

(3) Connect the CX-10934/ASN to the top connector of the turntable assembly.

(4) Connect the CX-10934/ASN clips to like-colored ML-1 leads.

c. Mount Induction Compass Transmitter T-611/ASN, used in CH-54, AH-1G, and UH-1 aircraft, inaccordance with figure 9-3 and the following instructions:

(1) Remove the transmitter mounting plate and the four posts from the turntable assembly.

(2) Remove the following equipment from the MK-1040A/ASN:

(a) Four turntable extension legs (part No. 2557345)

(b) MX-8112/ASM-339 (V).

(3) For CH-54 aircraft, mount the T-611/ASN under the MX-8112/ASM-339 (V).

(4) For AH-1G and UH-1 aircraft, mount the T-611/ASN on top of the MX-8112/ASM-339(V).

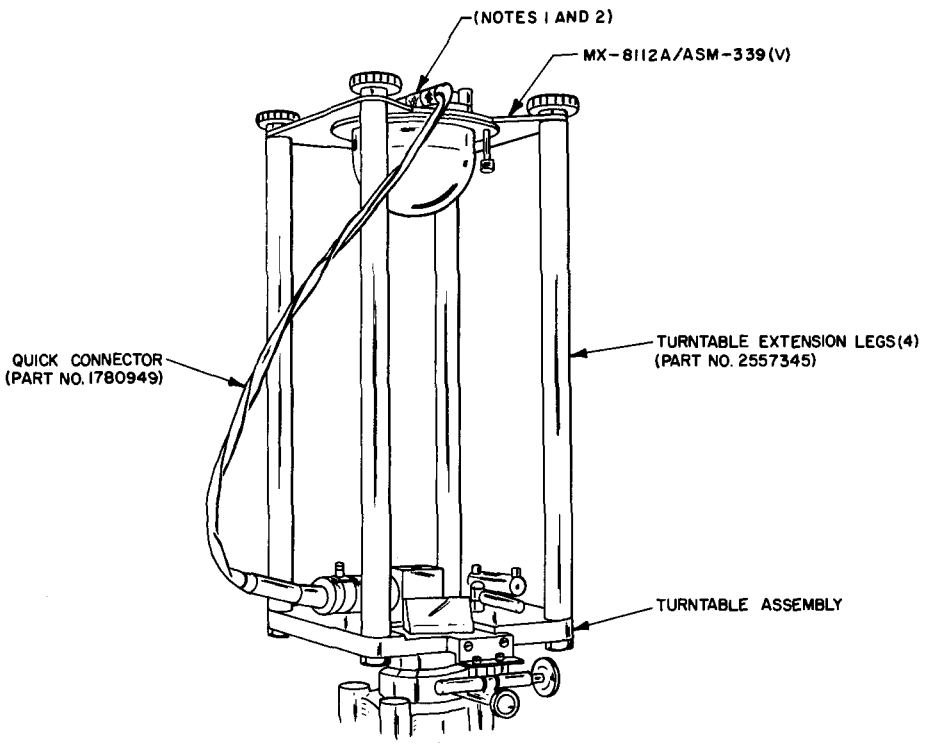

NOTES:
1. FOR CH-54 AIRCRAFT, MOUNT TRANSMITTER UNDER MX-8112A/ASM-339 (V)
2. FOR AH-1G AND UH-1 AIRCRAFT, MOUNT TRANSMITTER ON TOP OF MX-8112A/ASM-339(V)

EL4920-292-15-C2-TM-4

Figure 9-3. Induction Compass Transmitter T-611/ASN mounted on turnable assembly for AH-1G, CH-54 and UH-1 aircraft.

(5) Remove the quick connector (part No. 1780949) from the alignment equipment case.

(6) Connect the quick connector between the T-611/ASN and, the top connector of the turntable assembly.

d. Mount Induction Compass Transmitter T-611/ASN, used in U-1A, U-8D, U-21, CH-47, or CH-47A aircraft; or Induction Compass Transmitter DT-309/AJN, used in U-1A or U-8D aircraft, in accordance with figure 9-4 and the following instructions:

(1) Remove the transmitter mounting plate (part No. 2580974) from turntable assembly.

(2) Remove the MX-8112/ASM-339 (V) from the turntable assembly case.

(3) Mount the MX-8112/ASM-339 (V) on the turntable assembly.

(4) Mount the T-611/ASN or the DT-309/AJN on the turntable assembly.

(5) Remove the quick connector (part No. 1780949) from the alignment equipment case.

(6) Connect the quick connector between the T-611/ASN or the DT-309/AJN and the top connector of the turntable assembly. Use the rear portion only of the quick connector for the DT-309-AJN.

9-5. Calibrating Compass Transmitter

a. Check the magnetic bearing at the monitor assembly location as follows:

(1) Set the control console switches as follows :

(a) Δ 180 MINUTES, Δ 270 MINUTES, and MISAL MINUTES: 0.

(b) E1 CHECK-E2 CHECK: OFF.

(c) E1 NORM. El REV.: OFF.

(d) E2 NORM.-E2 REV.: OFF.

(e) MODE SELECTOR : MON.

(f) HEADING SELECTOR : 0 DEGREES.

(9) READOUT SELECT : F.V.

(h) DAMPING : OFF.

(i) FV SELECT:

1. For ML-1: 1.

2. For T-611/ASN and DT-309/AJN: 2.

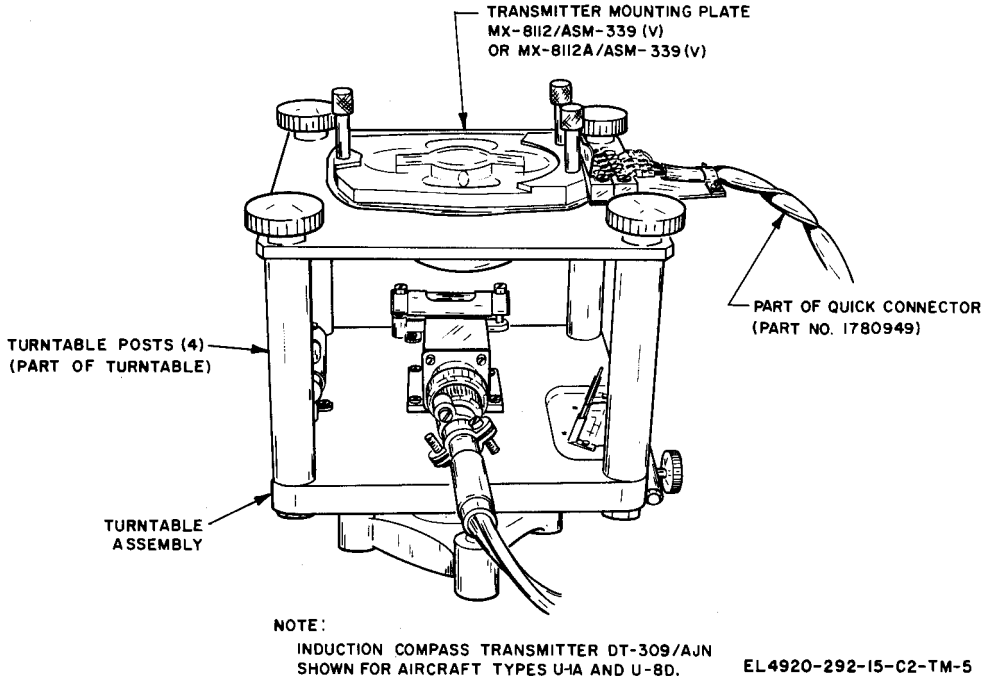

Figure 9-4. Induction Compass Transmitter T-611/ASN or DT-309/AJN mounted on turntable assembly for CH-47, CH-47A, U–1A, U-8D, and U-21 aircraft.

(j) POWER ON-POWER OFF: POWER ON.

(2) Adjust the VOLTS ADJUST control until the EXC VOLTS meter indicates 23.5 volts. Check to see that the FREQUENCY meter indicates 400 ±5 cycles per second (cps).

(3) Rotate the monitor assembly to sight the compass swing target established during the area magnetic survey (line 8-4 on area magnetic survey data sheet (fig. 4-4)). The target bearing should be permanently marked at the monitor location. Set the azimuth scale to target bearing. Record the bearing on line A-1 of compass swing data sheet (fig. 9-5).

(4) Rotate the monitor assembly to headings (azimuth scale settings) of 0, 90, 180, and 270°. Record the control console ERROR readout indications at each heading in table A of the swing data sheet.

NOTE

Errors are positive when white divisions appear in the ERROR readout, and negative when red divisions appear.

(5) Algebraically add the four errors and divide the sum by 4. Record the resultant monitor index error on line A-2 of swing data sheet.

(6) Record the turntable location correction (from line 10B of area magnetic survey data sheet (fig. 4-4) on line A-3 of the swing data sheet.

(7) Algebraically add values recorded on lines A-2 and A-3 of swing data sheet. Record the resultant corrected monitor index on line A4 of swing data sheet. This value represents initial magnetic bearing of north-south line.

(8) Rotate monitor assembly to heading of 0°. Record the ERROR readout indication as a monitor zero error on line A-5 of swing data sheet. This value serves as a reference to determine subsequent shifts in the direction of the earth's magnetic field.

(9) Set the control console AREA COMP control dial to the area compensation value established during the area magnetic survey (line 10D of area magnetic survey data sheet) and record the value on line A-6 of the swing data sheet.

b. Align the compass transmitter magnetically as follows:

(1) Set the MODE SELECTOR switch to CAL.

(2) Rotate the turntable assembly until the HEADING and ERROR readout indicates 0 DEGREES ±10 MINUTES. Set the turntable assembly azimuth scale to 0°.

(3) Rotate the turntable assembly to headings of 0, 90, 180, and 270°, tapping the compass transmitter lightly at each heading. Record the ERROR readout indication at each heading in table B of the swing data sheet,

(4) Algebraically add the four errors and divide the sum by 4. If the resultant index error exceeds ±10 minutes, change the azimuth scale setting by the amount and in the direction of the index error.

(5) Rotate the turntable assembly to heading of 0°. Record the ERROR readout indication three times, tapping the compass transmitter lightly before each reading. Algebraically add the three errors and divide the sum by 3. Record the resultant average error in table B of the swing data sheet.

(6) Repeat the procedure given in (5) above for headings of 90°, 180°, and 270°. Make recordings in appropriate columns of table B of the swing data sheet.

(7) Algebraically add the four average errors and divide the sum by 4. Record the resultant compass transmitter index error on line B-1 of the swing data sheet. If the index error exceeds ±15 minutes, repeat the procedure given in (2) above.

(8) Algebraically subtract the compass transmitter index error (line B-1) from each average error (table B) and record as corrected manual swing error in table B of the swing data sheet.

(9) Set the MODE SELECTOR switch to MON. Record the ERROR readout indication as monitor zero error on line B-2 of the swing data sheet.

NOTE

If the compass transmitter has been previously calibrated with an AN/ASM-339(V)1, the values of E1

COMPASS SWING DATA SHEET		LOCATION	
AIRCRAFT TYPE	COMPASS SYSTEM	TRANSMITTER PN	SN

SECTION A CHECK THE MAGNETIC BEARING AT THE MONITOR LOCATION

SWITCH AND CONTROL SETTINGS

Δ180, Δ270, Misal to 0.
Heading Selector to 0 Degrees.
E1-E2 Check to Off.
E1, E2 Volts to Off.
Mode Selector to Mon.
Readout Select to FV.
FV Select to 1 (ML-1)
2 (T-611 and DT-309)
Power On-Off to Power On.
Exc Volts to 23.5.

TABLE A

MONITOR HEADING	READOUT ERROR
0	
90	
180	
270	
ALGEBRAIC SUM	

Reference Target Bearing _____ A-1

Monitor Index Error = $\frac{\text{Algebraic Error Sum}}{4}$ _____ A-2

Turntable Location Correction _____ A-3

Corrected Monitor Index (A-2) + (A-3) _____ A-4

Monitor Zero Error _____ A-5

Area Comp Setting _____ A-6

SECTION B ALIGN THE TRANSMITTER MAGNETICALLY

SWITCH AND CONTROL SETTINGS

Change: Mode Selector to Cal.

TABLE B

TURNTABLE HEADING	READOUT ERRORS					CORRECTED MANUAL SWING ERROR (AVG MINUS INDEX B-1)
	INITIAL	1ST	2ND	3RD	AVG	
0						
90						
180						
270						
ALGEBRAIC SUM						

Transmitter Index Error =

$\frac{\text{Algebraic Sum}}{4}$ _____ B-1

NOTE

Correct index until error is within ±15 minutes.

Change: Mode Selector to Mon.

Monitor Zero Error _____ B-2

SECTION C DETERMINE THE E1 AND E2 VOLTAGES FOR THE TRANSMITTER

SWITCH AND CONTROL SETTINGS

Change: Mode Selector to Cal.
E1, E2 Volts as specified in tables C1 and C2.
Heading Selector to 90 Degrees.
Readout Select as specified in tables C1 and C2.

TABLE C1	E2	TABLE C2	E1
E1 TO OFF E2 TO NORM READOUT TO 0 TURNTABLE 270		E1 TO REV E2 TO OFF READOUT TO 90 TURNTABLE 180	
E2 TO REV READOUT TO 0 TURNTABLE 90		E1 TO NORM READOUT TO 90 TURNTABLE 0	
VERNIER SUM		VERNIER SUM	

E2 Vernier Average =

$\frac{\text{E2 Vernier Sum}}{6}$ _____ C-1

E1 Vernier Average =

$\frac{\text{E1 Vernier Sum}}{6}$ _____ C-2

Change: Mode Selector to Mon.
E1-E2 to Norm.
E1 Volts to C-2.
E2 Volts to C-1.
E1-E2 Check as required.
Readout Select to 90.

E1 Check Control Setting, E1-E2 Check Switch to E1 Check. _____ C-3

E2 Check Control Setting, E1-E2 Check Switch to E2 Check. _____ C-4

SECTION D DETERMINE THE Δ180 AND Δ270 VALUES

Change: E1-E2 Check to Off.
Readout Select to FV.

Monitor Zero Error _____ D-1

Misal Control Setting: (B-1) + (D-1) - (B-2) _____ D-2

Change: Mode Selector to Cal.
E1 Volts to C-2.
E2 Volts to C-1.
Misal to D-2.
Heading Selector as indicated.
E1-E2 to Norm.

(Turntable to 0 Heading.)

TABLE D

HDG. SELECTOR	READOUT ERROR				CORRECTED MANUAL SWING ERROR (From Table B)	(E-M) ELECTRICAL ERROR MINUS MANUAL ERROR	CORRECTED ELECTRICAL SWING
	1	2	3	AVG			
0							
90							
180							
270							

$\Delta 180: (E\text{-}M)_{180} =$ _____ D-3

$\Delta 270: (E\text{-}M)_{90} + (E\text{-}M)_{270} =$ _____ D-4

$(E\text{-}M)_{90}$ shall be equal to $(E\text{-}M)_{270}$ ± 9 minutes; if not, repeat sections B and C.

EL4920-292-15-C2-TM-5 ①

Figure 9-5①. Typical compass swing data sheet (steet 1 of 2).

SECTION E OPTICAL TRANSFER OF THE TRANSMITTER

Plumb Bob Separation Along Aircraft	_____ E-1
Displacement of Nose of Aircraft from N-S Line (East +, West -)	_____ E-2
Displacement of Tail of Aircraft from N-S Line (East +, West -)	_____ E-3
Plumb Bob Total Displacement (E-2) - (E-3)	_____ E-4
Aircraft Misalignment with N-S Line	_____ E-5
Optical Alignment Correction = (E-5) + (A-4) + (B-2) - (A-5) - (B-1)	_____ E-6

SWITCH AND CONTROL SETTINGS / SECTION F COMPASS SWING

E1-E2 to Norm.
E1-E2 Check to Off.
Mode Selector to Mon.
Heading Selector to 0 Degrees.
Readout Select to FV.
E1 Check to C-3.
E2 Check to C-4.
Area Comp to A-6.
FV Select to 1 (ML-1)
2 (T-611 and DT-309)

Monitor Zero Error	_____ F-1
Misal Control Setting (E-5) + (A-4) + (F-1) - (A-5)	_____ F-2
Δ180 Correction Value (from D-3)	_____ F-3
Δ270 Correction Value (from D-4)	_____ F-4
E1 Check Control Setting (from C-3)	_____ F-5
E2 Check Control Setting (from C-4)	_____ F-6

Change: Readout Select to 90.
E1, E2 Volts to null Null Indicator.

E1 Recorded with E1-E2 Check to E1 Check.	_____ F-7
E2 Recorded with E1-E2 Check in E2 Check.	_____ F-8

Change: E1-E2 Check to Off.
Misal to F-2.
Mode Selector as required.
Heading Selector as required.
Readout Select as required.

ONE-CYCLE ERROR COMPENSATION

TABLE F1

HDG. SELECTOR	SYSTEM READOUT ERROR 1	2	3	4
0				
90				
180				
270				

$$\text{Index} = \frac{E_0 + E_{90} + E_{180} + E_{270}}{4}$$

$$\text{N-S Error} = \frac{E_0 - E_{180}}{2}$$

$$\text{E-W Error} = \frac{E_{90} - E_{270}}{2}$$

SYSTEM ERROR COMPENSATION

TABLE F2

HDG. SELECTOR	SYSTEM READOUT ERROR 1	2	3	HDG. SELECTOR	SYSTEM READOUT ERROR 1	2	3	HDG. SELECTOR	SYSTEM READOUT ERROR 1	2	3
0				120				240			
15				135				255			
30				150				270			
45				165				285			
60				180				300			
75				195				315			
90				210				330			
105				225				345			

REMARKS

Figure 9-5 ②. Typical compass swing data sheet (Sheet 2 of 2). *EL4920-292-15-C2-TM-5* ②

CHECK, E2 CHECK, Δ 180 MINUTES, and Δ 270 MINUTES and polarity determined at that time can be used in any subsequent calibration of the same compass transmitter. If these values are available, the procedures given in c and d below maybe omitted.

c. Determine E1 and E2 voltages for the compass transmitter as follows:

(1) Set the control console switches as follows :

(a) MODE SELECTOR: CAL

(b) HEADING SELECTOR: 90 DEGREES.

(c) E2 NORM.-E2 REV.: E2 NORM.

(d) READOUT SELECT :0.

(2) Rotate the turntable assembly to a heading of 2700. Tap the compass transmitter lightly.

(3) Adjust the E2 VOLTS controls until the NULL INDICATOR meter indicates a null. Record E2 VOLTS and vernier setting in table C1 of the swing data sheet.

NOTE

If the compass transmitter error at 0° is more positive than the error at 180° (table B of the swing data sheet), the E2 VOLTS vernier control setting should be 500, or less. If the error at 180° is more positive than the error at 0°, the setting should be more than 500. If setting is incorrect readjust the E2 VOLTS (0 to 10) switch by 1 volt to achieve the correct vernier range setting.

(4) Repeat the procedures given in (3) above twice, tapping the compass transmitter lightly before each null.

(5) Rotate the turntable assembly to a heading of 90°. Tap the compass transmitter lightly.

(6) Set the E2 NORM.-E2 REV. switch to E2 REV.

(7) Adjust the E2 VOLTS vernier control until the NULL INDICATOR meter indicates a null. Record the vernier setting in table C1 of the swing data sheet.

NOTE

If a null cannot be obtained using only the E2 VOLTS vernier, the compass transmitter probably is out of tolerance.

(8) Repeat the procedure given in (7) above twice, tapping the compass transmitter lightly before each null.

(9) Add the six settings recorded in table Cl of the swing data sheet and divide the sum by 6. Set the E2 VOLTS controls to this average value and record value on line C-1 of the swing data sheet.

(10) Set the control console switches as follows :

(a) E2 NORM.-E2 REV,: OFF.

(b) E1 NORM.-E1 REV. : E1 REV.

(c) READOUT SELECT : 90.

(11) Rotate the turntable assembly to a heading of 1800. Tap the compass transmitter lightly.

(12) Adjust the El VOLTS control until the NULL INDICATOR meter indicates a null. Record the El VOLTS and vernier setting in table C2 of the swing data sheet.

NOTE

If the compass transmitter error at 90° is more positive than the error at 270° (table B), El VOLTS vernier control setting should be 500, or more. If the error at 2700 is more positive than the error at 900, the setting should be less than 500. If the setting is incorrect, readjust the El VOLTS (O to 10) switch as required and adjust vernier for a null.

(13) Repeat the procedures given in (12) above twice, tapping the compass transmitter lightly before each null.

(14) Rotate the turntable assembly to a heading of 0°. Tap the compass transmitter lightly.

(15) Set the El NORM-El REV. switch to El NORM.

(16) Adjust the El VOLTS vernier control until the NULL INDICATOR meter indicates a null. Record the vernier setting in table C2 of the swing data sheet,

NOTE

If a null cannot be obtained using the El VOLTS vernier control, the compass transmitter probably is out of tolerance.

(17) Repeat the procedures given in (16) above twice, tapping the compass transmitter lightly before each null.

(18) Add the six settings recorded in table C2 of the swing data sheet and divide the sum by 6, Set the E1 VOLTS controls to this average value and record the value on line C-2 of the swing data sheet.

(19) Set the control console switches as follows:

(a) AREA COMP to setting recorded on line A-6 of the swing data sheet.

(b) E2 NORM.-E2 REV.: E2 NORM.

(c) HEADING SELECTOR: 0 DEGREES.

(d) MODE SELECTOR : MON.

(e) E1 CHECK-E2 CHECK: E1 CHECK.

(20) Adjust the E1 CHECK vernier until the NULL INDICATOR meter indicates a null. Record the vernier setting on line C-3 of the swing data sheet.

(21) Set the E1 CHECK-E2 CHECK switch to E2 CHECK.

(22) Adjust the E2 CHECK vernier until the NULL INDICATOR meter indicates a null. Record the vernier setting on line C-4 of the swing data sheet.

d. Determine Δ 180 MINUTES and Δ 270 MINUTES and polarity values as follows:

(1) Set the control console switches as follows :

(a) READOUT SELECT: F.V.

(b) E1 CHECK-E2 CHECK: OFF,

(2) Record the ERROR readout indication as monitor zero error on line D-1 of the swing data sheet.

(3) Using the swing data sheet, calculate the misalignment value as the algebraic sum of transmitter index error (line B-1) plus monitor zero error (line D-1) minus monitor zero error (line B-2). Record the value on line D-2 of the swing data sheet.

NOTE

Set this value on the MISAL MINUTES switch (to the nearest 3-minute position). Set the MISAL polarity switch to the sign (+ or –).

(4) Set the MODE SELECTOR switch to CAL.

(5) Tap the compass transmitter lightly.

(6) Set HEADING SELECTOR switch to 0, 90, 180, and 270 DEGREES, Record the ERROR readout indication at each heading in table D of the swing data sheet,

(7) Repeat the procedures given in (5) and (6) above twice.

(8) Algebraically add the three errors at each heading and divide each sum by 3. Record the average errors in table D of the swing data sheet.

(9) Record the corrected manual swing errors (table B) in table D of the swing data sheet.

(10) Algebraically subtract the corrected manual swing errors from the average electrical swing errors (table D) and record in E-M column of table D of the swing data sheet; resultant values shall be as follows:

(a) The E-M values at each cardinal heading shall

1. not exceed:
2. At 0°: ±5 minutes.
3. At 90°: ±30 minutes.
4. At 180°: ±60 minutes.
5. At 270°: ±30 minutes,

(b) The E-M value at 90 minus the E-M value at 270° shall be ±9 minutes, or less; if it is not, recheck calculations given in table B of the swing data sheet and repeat the compass transmitter calibration procedure (c above).

(11) The Δ 180 crosstalk error is the E-M value at 1800. Record this value on line D-3 of the swing data sheet. Set the Δ 180 MINUTES switch to the nearest 3-minute position, and the Δ 180 polarity switch to the sign (+ or –) of the error.

(12) Calculate the Δ 270 crosstalk error as the algebraic sum of the E-M value at 900 plus the E-M value at 2700. Record this value on line D-4 of the swing data sheet. Set the Δ

270 MINUTES switch to the nearest 3-minute position, and the Δ 270 polarity switch to the sign (+ or –) of the error.

(13) Set the HEADING SELECTOR switch to 0, 90, 180, and 270 DEGREES, Record the ERROR readout indication at each heading in the corrected electrical swing column of table D of the swing data sheet. Errors shall be within ±6 minutes of corrected manual swing errors at each heading.

(14) Set the POWER ON-POWER OFF switch to POWER OFF.

9-6. Optical Transfer Procedure

CAUTION

Optical transfer is a critical procedure; be extremely careful to prevent the compass transmitter from being jarred, upset, or knocked out of adjustment before it is fully secured in aircraft.

a. Set up the equipment as follows:

(1) Remove the telescope from the alignment equipment case. (Refer to figure 9-6 for location of the telescope controls.)

(2) Refer to the chart below and remove applicable compass calibrator set adapter from the MK-1040A/ASN.

Refer to fig. No.	For aircraft type-	Compass calibrator set adapter	Sperry part No.
9–6	U-1A, U-6, U-8D, U-21.	MX-8162/ASN	2592699
9–7	CH-47, CH-47A-	MX-8166/ASN	2592734-901
9-8	AH-lG, UH–1B, UH-1C, UH-1D, UH-1H.	MX-8164/ASN	2592721
9-9	OH-6A --------	MX-8165/ASN	2592725
9–10	OV-1 ----------	MX-8167/ASN	2592738
9-11	CH-54 ---------	MX-8153/ASN	2592710
9-12	U-8 ----------		

[1]Optical transfer adapter for U-8 aircraft with ML-1 is not p: of the MK-1040A/ASN. Use coupling shaft (part No. 2680256) a plate (part No. 2566563) from alignment equipment case.

(3) Loosen the turntable assembly upper motion lock during the following procedures to prevent any inadvertent torque against lower motion.

(4) Remove electrical connections from the compass transmitter.

(5) Mount the adapter on the compass transmitter in accordance with the applicable figure (figs. 9-6 through 9-12).

(6) Mount the telescope on the adapter. Be sure that all screws are properly seated and there is no motion in adapters.

NOTE

On horizontal adapters, the telescope may be attached in an upright or inverted position.

b. Sight the target from the turntable location as follows:

(1) Rotate the turntable assembly to a heading of 0°.

(2) Lock the turntable assembly upper motion.

(3) Loosen the telescope azimuth clamp.

(4) Rotate the telescope to sight the target which is at least $^1/_2$ mile away. Be sure that the target can also be sighted when the compass transmitter is mounted in the aircraft,

(5) Tighten the telescope azimuth clamp.

(6) Loosen the telescope fine adjustment clamp.

(7) Make a fine adjustment on the target with the telescope fine azimuth adjustment screw.

(8) Center the telescope bubble level. Be sure that target remains centered in crosshair. If necessary, adjust the telescope.

(9) Tap the telescope lightly at the eye end. Be sure that the target remains centered in the crosshair. If necessary, tighten the mounting screws and adjust the telescope.

(10) Tighten the telescope fine adjustment clamp.

(11) Set the telescope drum dial to 0 by rotating the drum dial itself. Be sure that the target remains centered in the crosshair and the level bubble is centered. If necessary, adjust telescope.

(12) Move the turntable assembly (with the optical transfer equipment attached) aside.

c. Determine the aircraft misalignment as follows :

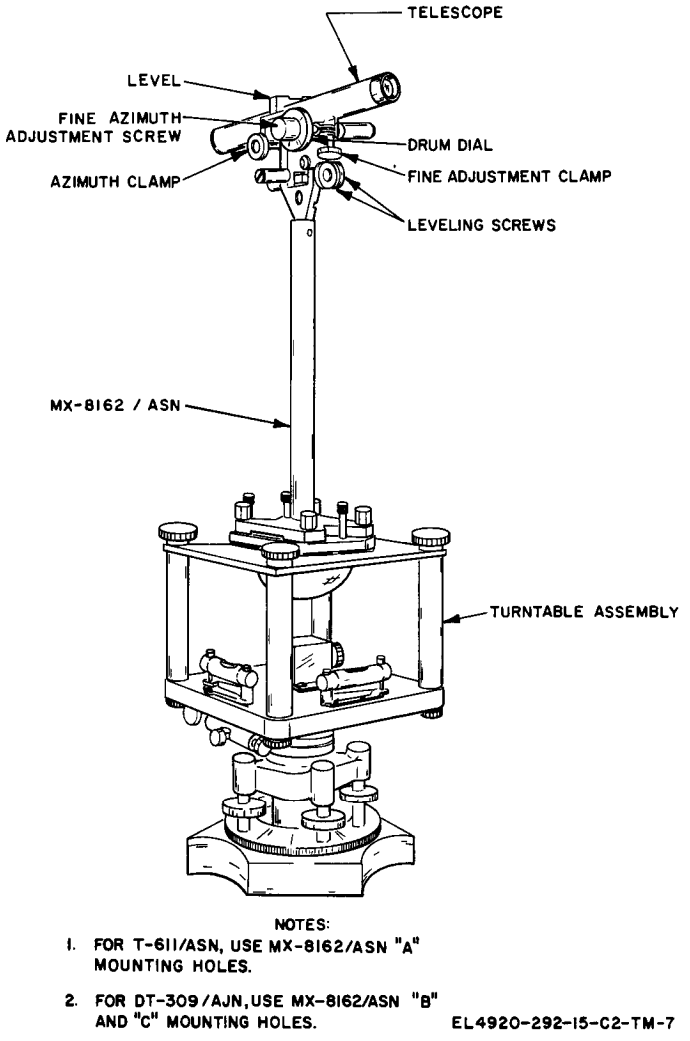

Figure 9-6. Optical transfer setup for Induction compass Transmitter T-611/ASN or DT-809/AJN in U-1A, U-6, U-8D, and *U-21 aircraft.*

(1) Tow the aircraft into position with the centerline of the aircraft located as directly as possible over the north-south line established during the area magnetic survey, The nose of the aircraft must be at north heading. The compass transmitter access must be directly over the turntable location.

(2) Remove the plumbline from the alignment equipment case.

(3) Drop the plumb line from the aircraft centerline at the nose and tail. Mark the points where the plumb bob comes to rest. With the measuring tape, measure the distance between these two points. Record this distance as the plumb bob separation on line E-1 of the swing data sheet.

(4) Measure the lateral displacement of lines E-2 and E-3 of the swing data sheet.

NOTE

If this displacement is west of the north-south line, it shall have a negative value, and if it is east, a positive value.

(5) Algebraically subtract the lateral displacement at the tail from the lateral displacement at the nose and record on line E-4 of the swing data sheet.

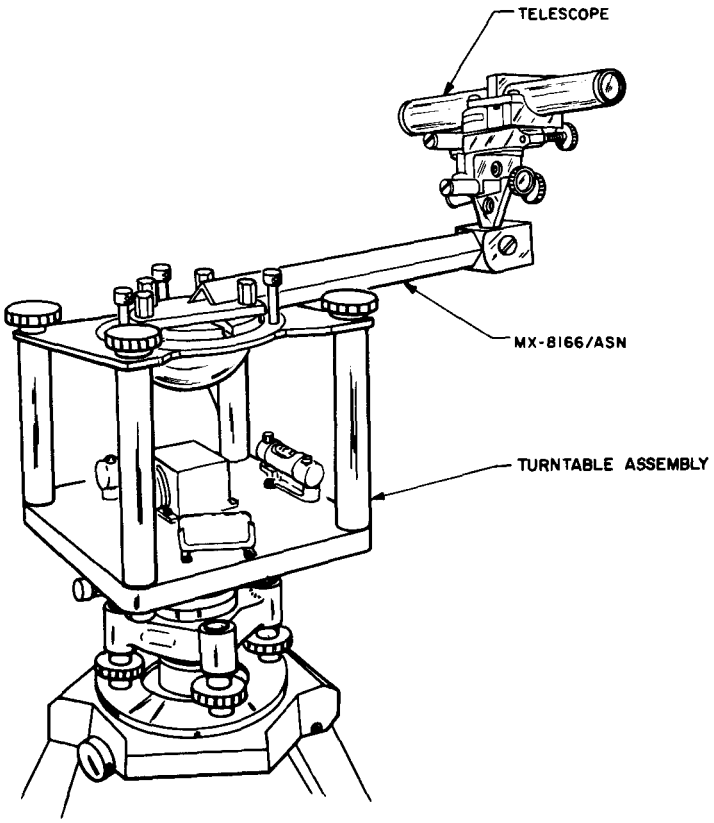

NOTE:
FOR CH-47 AND CH-47A AIRCRAFT, USE MX-8166/ASN "A" MOUNTING HOLES.

EL4920-292-15-C2-TM-8

Figure 9-7. Optical transfer setup for Induction Compass *Transmitter T-611/ASN in CH-47 and CH-47A aircraft.*

(6) Determine aircraft misalignment (minutes) from nomograph shown in figure 9-13. Record this value on line E-5 of the swing data sheet. Polarity is same as on line E-4 of the swing data sheet.

(7) Determine optical alignment correction from the equation given in section E of the swing data sheet and record on line E-6 of the swing data sheet.

(8) Loosen the telescope fine adjustment clamp.

(9) Rotate the telescope fine azimuth adjustment screw by an amount equal to optical alignment correction of line E-6 of the swing data sheet.

NOTE

Clockwise rotation of the drum dial corresponds with increasing heading. One turn of the dial is equivalent to 1° of correction, Each dial division is equal to 1 minute. If E-6 is positive, rotate the fine azimuth adjustment clockwise for upright optics and counterclockwise for inverted optics.

(10) Tighten the telescope fine adjustment clamp,

d. Install the compass transmitter in the aircraft as follows:

(1) Remove the compass transmitter with the optical transfer equipment attached from the turntable assembly.

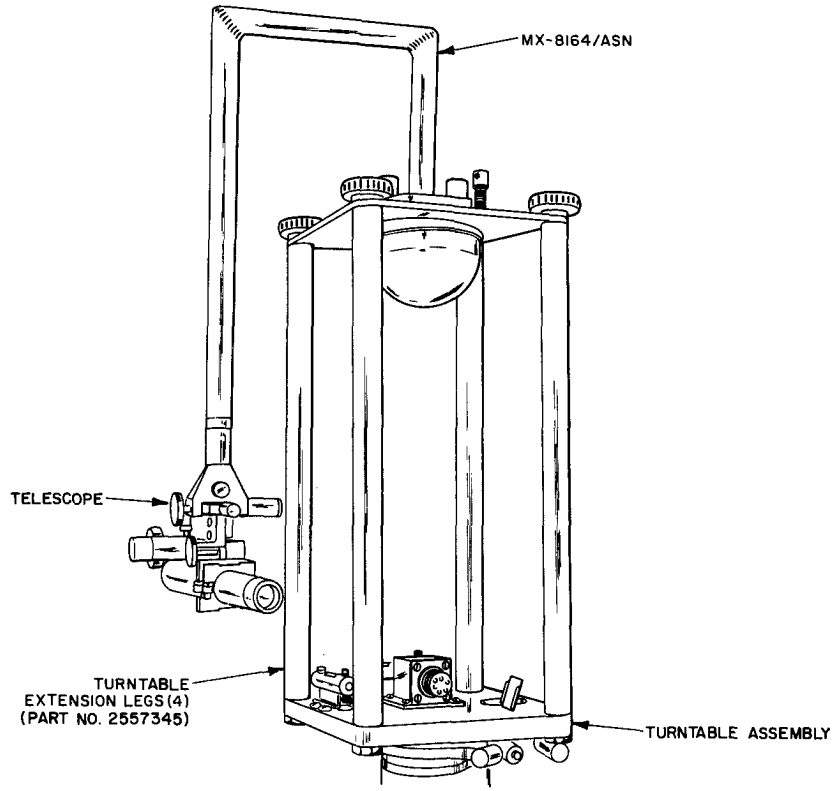

NOTES:
1. FOR UH-IB, UH-IC, UH-ID, AND UH-IH AIRCRAFT, USE MX-8164/ASN "A" MOUNTING HOLES.
2. FOR AH-IG AIRCRAFT, USE MX-8164/ASN "B" MOUNTING HOLES.

EL4920-292-15-C2-TM-9

Figure 9-8. Optical transfer setup for Induction Compass Transmitter T-611/ASN in AH-1G and UH-1 aircraft.

(2) Place the compass transmitter in the aircraft mounting bracket and partially fasten the three mounting screws.

NOTE

For bottom-mounted compass transmitters, make aircraft electrical connections and mount the compass system magnetic compensator before installing the compass transmitter in the aircraft.

(3) Sight the telescope on the target established in b(4) above by rotating the compass transmitter until the target is aligned with the vertical crosshair.

(4) Level the telescope with the leveling adjustment screws until the bubble level is centered and the target is aligned with the horizontal crosshair.

(5) Be sure that the target is centered in the crosshair.

(6) Secure the compass transmitter by tightening the mounting screws.

(7) Check the alignment.

(8) Remove the optical transfer equipment from the compass transmitter.

9-7. Compass Swing Procedure

a. Set up the equipment as follows:

(1) Disconnect cable (W2) from the turntable assembly.

(2) Refer to table 9-1 and perform the compass system calibration in accordance with

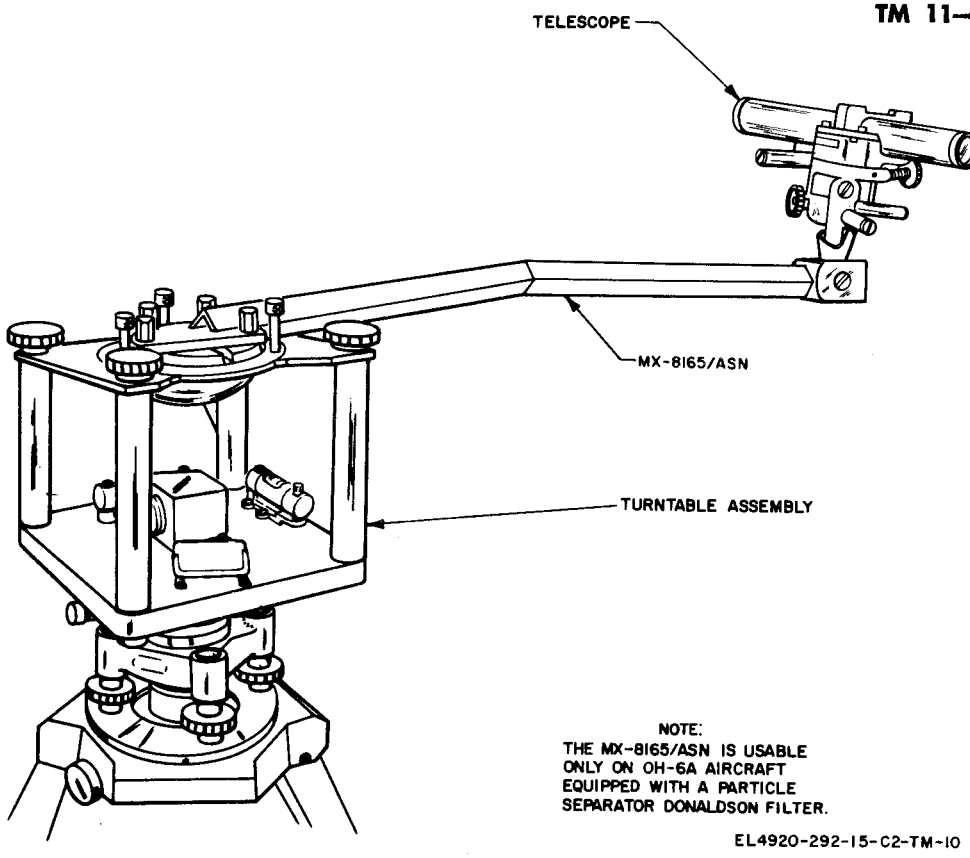

Figure 9-9. Optical transfer setup for Induction Compass Transmitter T-611/ASN in OH-6A aircraft.

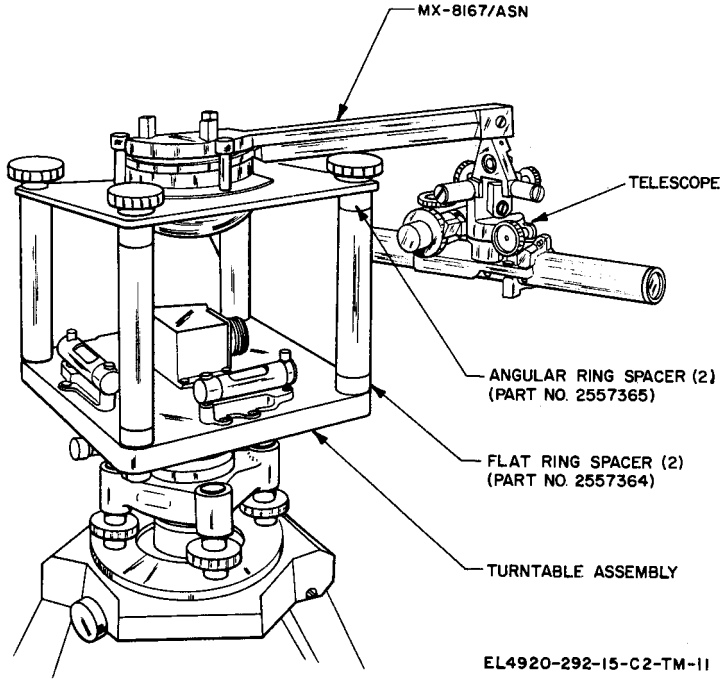

Figure 9-10. Optical transfer setup for Remote Compass Transmitter ML-1 in OV-1 aircraft.

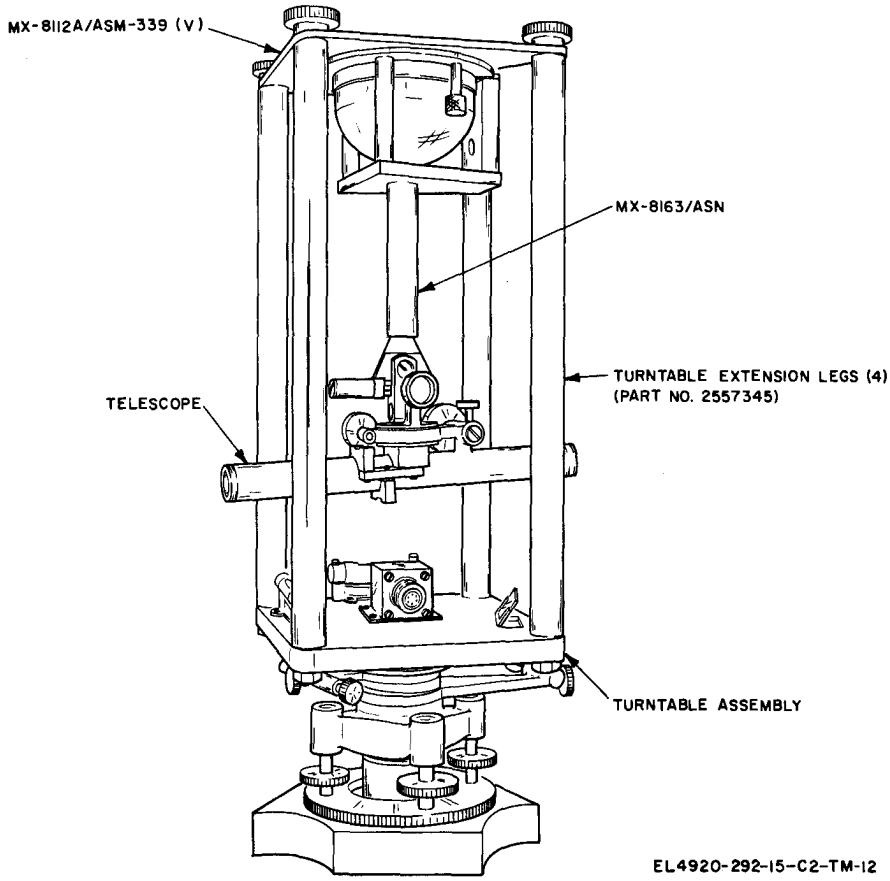

Figure 9-11. Optical transfer setup for Induction Compass Transmitter T-611/ASN in CH-54 aircraft.

the procedures applicable to the aircraft and compass system being calibrated. Table 9-1 defines reference numbers. In sequence, perform only the procedures which are applicable to the compass system aircraft combination that is to be calibrated.

b. Perform one-cycle error compensation for Reference Nos. 1,2,4, 6, or 7 as follows:

(1) Connect the compass calibrator to the aircraft compass transmitter in accordance with figure 9-14 for reference Nos. 1, 2, 4, or 6. Temporarily mount the magnetic compensator with the rubber gasket on the compass transmitter,

(2) Connect the compass calibrator to the aircraft wiring in accordance with figure 9-15 for reference No, 7. Mount the magnetic compensator on the ML-1 and connect ML-1 leads to the aircraft terminal strip in accordance with the aircraft technical manual.

(3) Set the control console switches as follows :

(a) E1 NORM.-E1 REV. : El NORM.

(b) E2 NORM.-E2 REV. : E2 NORM.

(c) AREA COMP to value on line A-6 of swing data sheet.

(d) E1 CHECK-E2 CHECK: OFF.

(e) Δ180 MINUTES and polarity to value on line D-3 of swing data sheet.

(f) Δ270 MINUTES and polarity to value on line D-4 of swing data sheet.

(g) MODE SELECTOR : MON.

(h) HEADING SELECTOR : 0 DEGREES.

(i) FV SELECT:

1. For ML-1: 1.

Table 9-1. Compass Swing Procedure

Reference No.	Compass system	Indicator	Compass transmitter	Aircraft type	One-cycle compensation		System swing	
					Procedure para	Setup fig.	Procedure para	Setup fig.
1	AN/ASN-13	ID-567	T-611/ASN	U-1A, U-8D	9-7*b*	9-14	9-7*c*	9-16
2	AN/ASN-43	ID-998/ASN	T-611/ASN	AH-1G, CH-47, UH-1 (B, C, D, and H), U-21.	9-7*b*	9-14	9-7*d*	9-17
3	AN/ASN-43	ID-998/ASN	T-611/ASN	CH-54	9-7*f*	9-17	9-7*f*	9-17
4	AN/ASN-43	ID-1351/A	T-611/ASN	OH-6A	9-7*b*	9-14	9-7*c*	9-16
5	C-12	----------	DT-309/AJN	U-1A, U-6, U-8D	9-7*g*	9-19	9-7*g*	9-19
6	J-2	ID-998/ASN	T-611/ASN	CH-47A, U-1A, UH-1 (B, and C), U-6, U-8D.	9-7*b*	9-14	9-7*d*	9-17
7	MA-1	----------	ML-1	OV-1, U-8	9-7*b*	9-15	9-7*e*	9-18

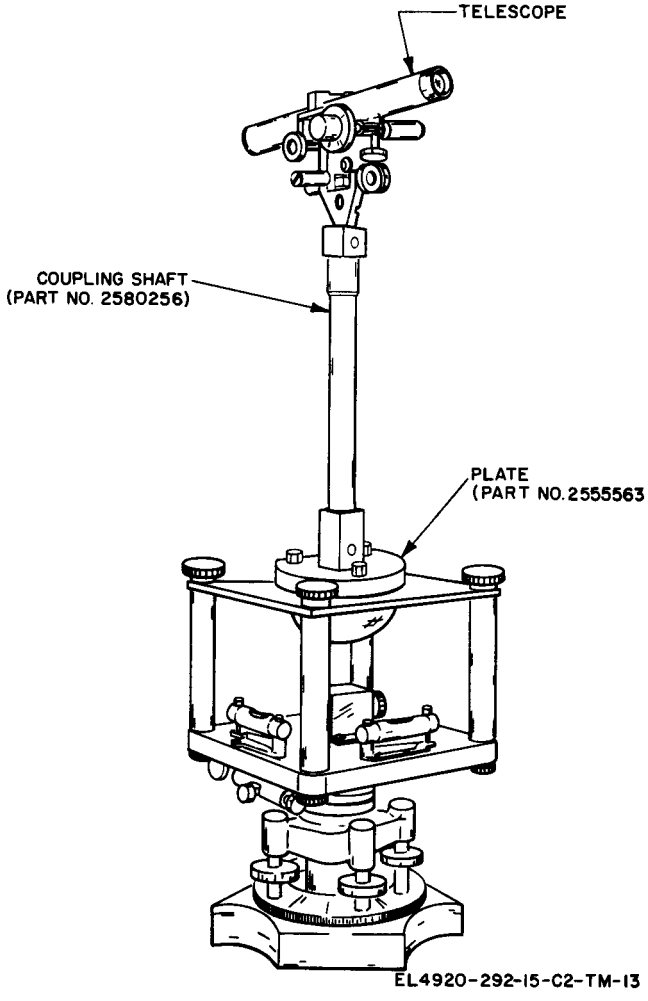

Figure 9-12. Optical transfer setup for Remote Compass Transmitter ML-1 in U-8 aircraft.

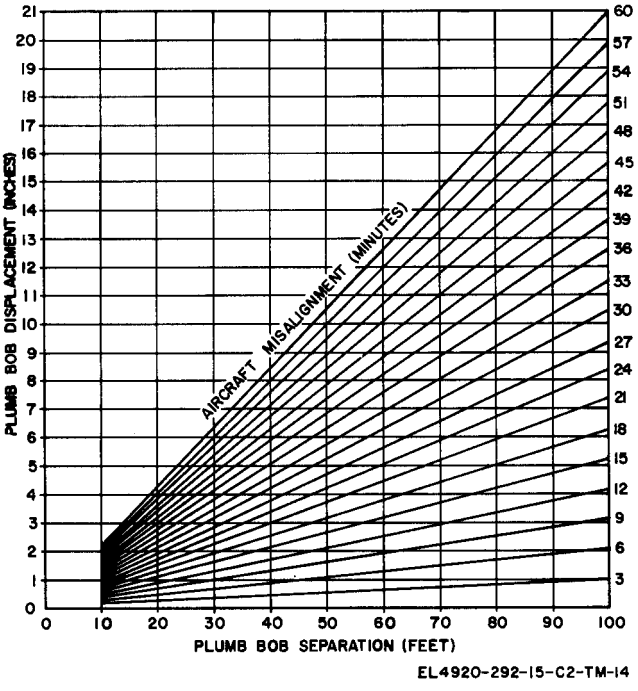

Figure 9-13. Nomograph.

2. For T-611/ASN and DT-309/AJN: 2

(j) READOUT SELECT: F.V.

(k) POWER ON-POWER OFF: POWER ON.

(4) Adjust the VOLTS ADJUST control until the EXC VOLTS meter indicates 23.5 volts.

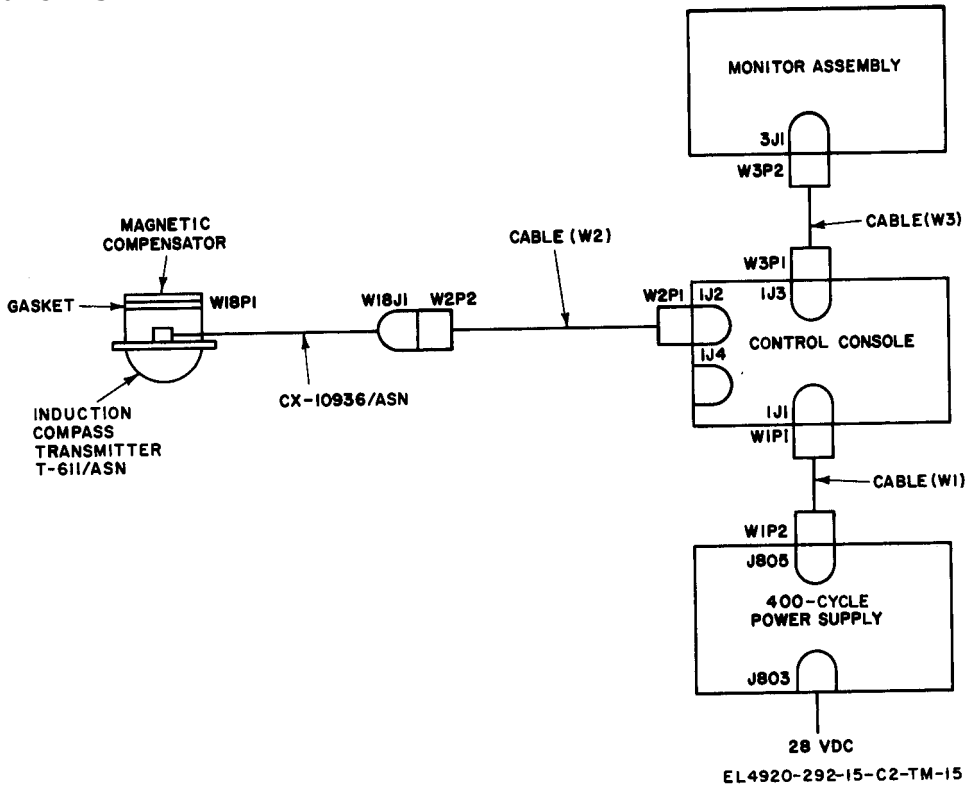

Figure 9-14. Adapter cable interconnection for one-cycle calibration of Induction Compass Transmitter T-611/ASN.

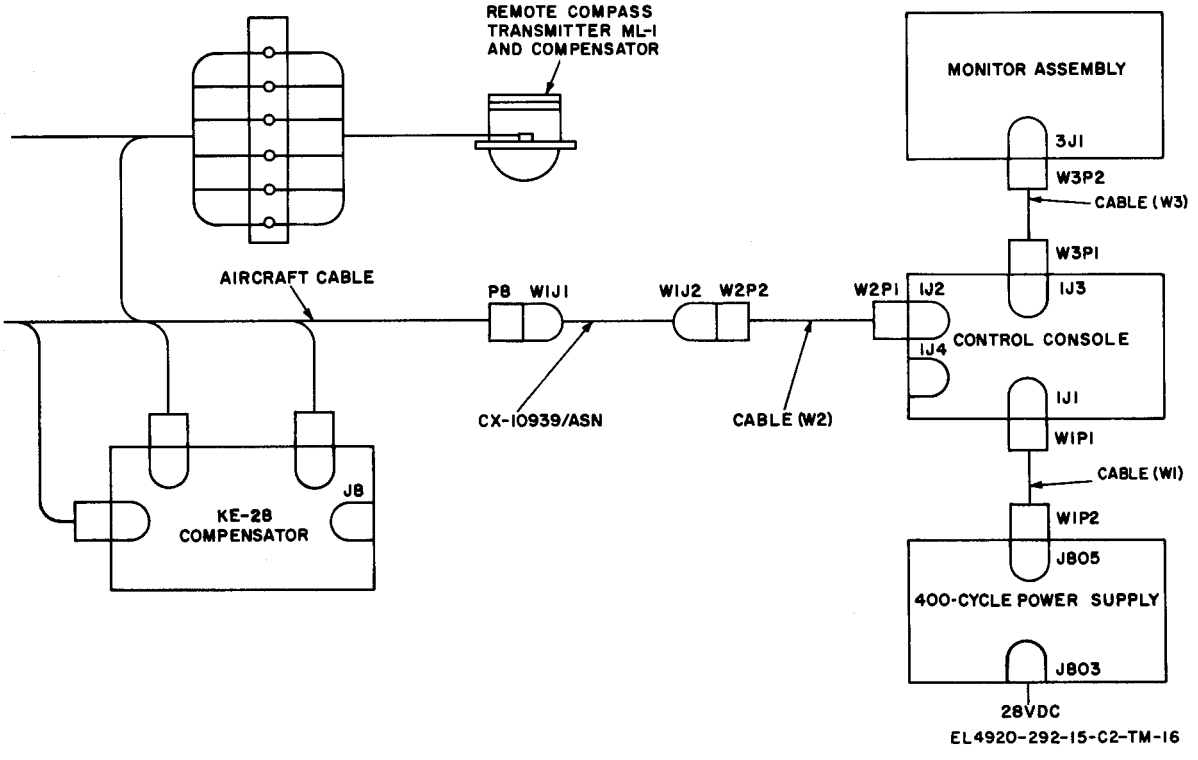

Figure 9-15. Adapter cable interconnection for one-oycle calibration of Compass Ststem MA -1.

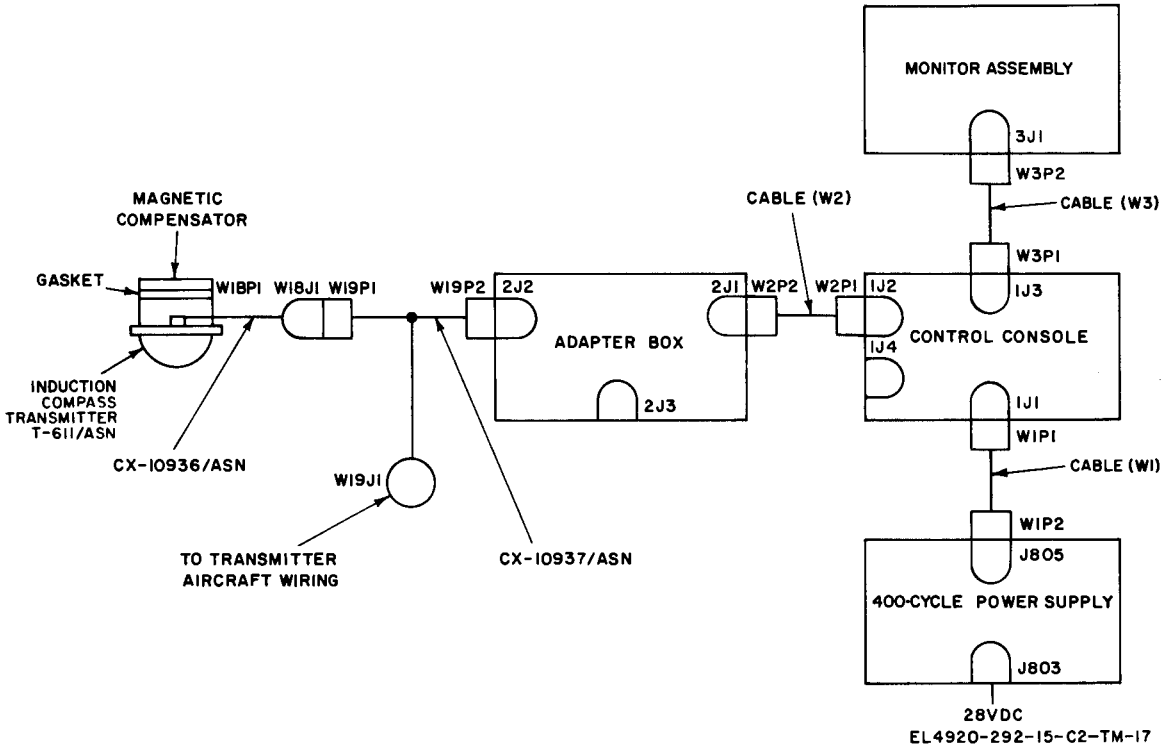

Figure 9-16. Adapter cable interconnection for system compass swing on AN/ASN-13 and AN/ASN-43 with ID-1851/A.

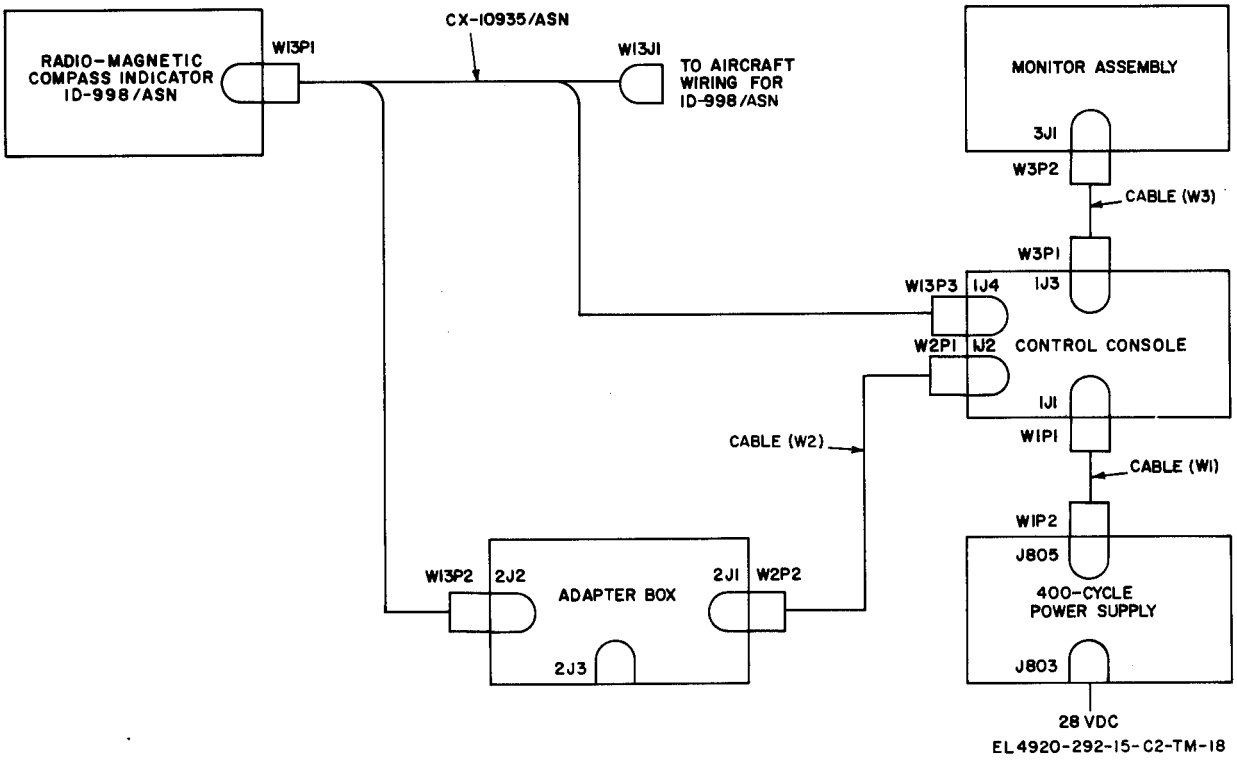

Figure 9-17. Adapter cable interconnection for system compass swing on J-2 and AN/ASN-43 a with ID-998/ASN.

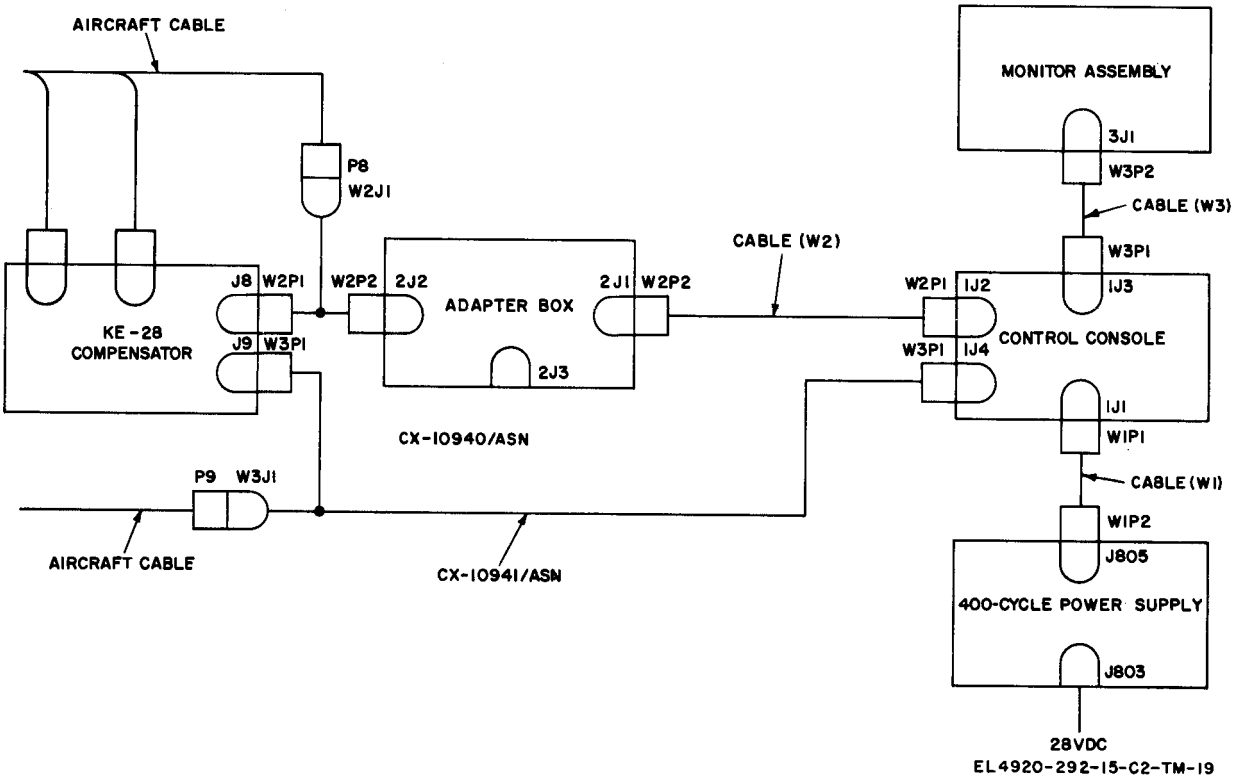

Figure 9-18. Adapter cable interconnection for system compass swing on MA-1.

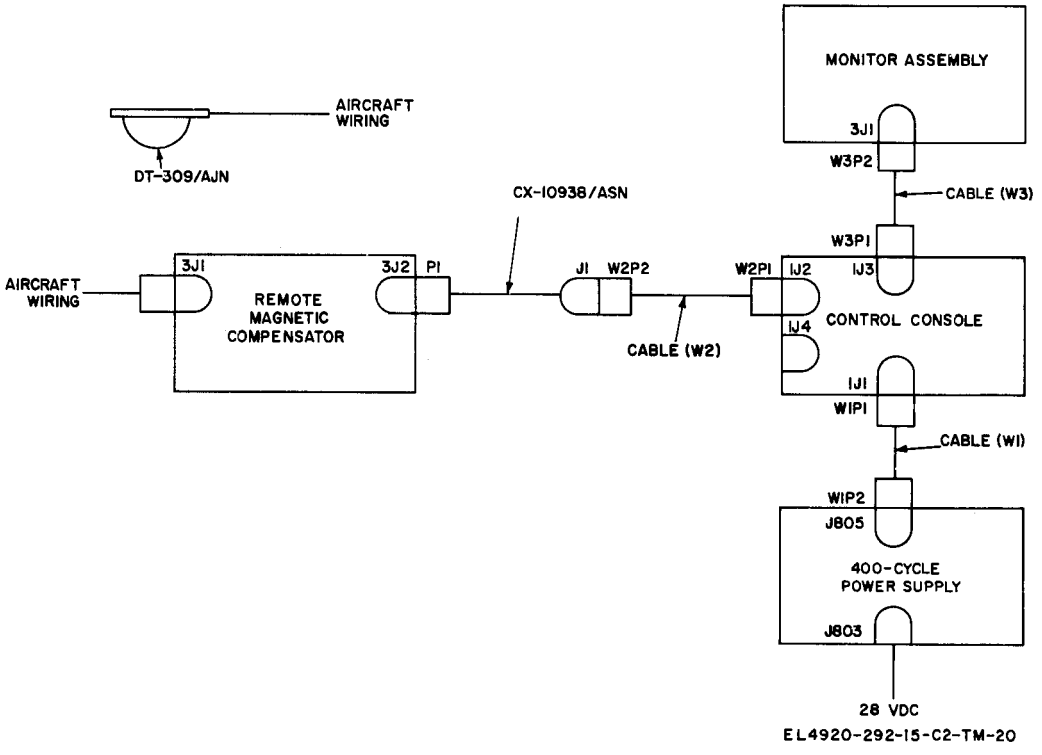

Figure 9-19. Adapter cable interconnection for system compass swing on C-12.

(5) Record the ERROR readout indication as monitor zero error on line F-1 of the swing data sheet.

(6) Determine the MISAL switch settings from the equation given in section F of the swing data sheet. Record this value on line F-2 of the swing data sheet. Set the MISAL MINUTES and polarity switches to this value.

(7) Check to see that the E1 CHECK, E2 CHECK, Δ180 MINUTES, and Δ270 MINUTES and polarity settings have not been changed from those values recorded on lines C-3, C-4, D-3, and D4 of the swing data sheet. Record these values on lines F-3 through F-6 of the swing data sheet.

(8) Set the E1 CHECK-E2 CHECK switch to E1 CHECK.

(9) Set the READOUT SELECT switch to 90.

(10) Adjust the E1 VOLTS controls until the NULL INDICATOR meter indicates a null. Record the E2 VOLTS control settings on line F-7 of the swing data sheet.

(11) Set the E1 CHECK-E2 CHECK switch to E2 CHECK.

(12) Adjust the E2 VOLTS controls until the NULL INDICATOR meter indicates a null. Record the E VOLTS control settings on line F-8 of the swing data sheet.

(13) Se the E1 CHECK-E2 CHECK switch to OFF.

(14) Set the MODE SELECTOR switch to CAL.

(15) Set the HEADING SELECTOR switch to O DEGREES. Adjust the compensator N-S screw to obtain a HEADING and ERROR readout indication of 0 DEGREES ±15 MINUTES. Record the error in table F1 of the swing data sheet. Use the nonmagnetic (brass) screwdriver from the alignment equipment case.

(16) Set the HEADING SELECTOR switch to 90 DEGREES. Adjust the compensator E-W screw for a HEADING and ERROR readout indication of 90 DEGREES ±15 MINUTES. Record in table F1 of swing data sheet.

(17) Set the HEADING SELECTOR switch to 180 DEGREES. Adjust the compensator N-S screw to remove one-half the error. Record in table F1 of swing data sheet.

(18) Set the HEADING SELECTOR switch to 270 DEGREES. Adjust the compensator E-W screw to remove one-half the error. Record in table F1 of swing data sheet.

(19) Set the HEADING SELECTOR switch to 0, 90, 180, and 270 DEGREES. Record the ERROR readout indication at each heading in table F1 of the swing data sheet.

(20) The error at 0° shall equal the error at 180° (N-S) within ±12 minutes. The error at 90° shall equal error at 270° (E-W) within ±12 minutes. If necessary, repeat compensation beginning with the procedures given in (15) above.

(21) Set the POWER ON-POWER OFF switch to POWER OFF.

(22) Refer to table 9-2 and select the applicable compass system swing procedure,

c. Perform system error compensation for reference Nos. 1 and 4 as follows:

(1) Connect the compass calibrator to the aircraft compass system in accordance with figure 9-16.

(2) Apply power to the compass system.

(3) Set the control console switches as follows:

(a) MODE SELECTOR: IND.
(b) READOUT SELECT: 0.
(c) POWER ON-POWER OFF: POWER ON.

(4) Adjust the VOLTS ADJUST control until the EXC VOLTS meter indicates 23.5 volts.

(5) Set the HEADING SELECTOR switch in 15° increments. At each heading, synchronize the compass system with the synchronizing control on the compass indicator. Record the heading errors as read on the aircraft compass indicator in table F2 of the swing data sheet.

NOTE

Synchronization is accomplished by pressing and rotating the synchronizing knob in the direction of the symbol appearing in the annunciator window

until the window is blank.
Allow sufficient time for system synchronization to settle out before recording error readings.

(6) Set the POWER ON-POWER OFF switch to POWER OFF.

(7) Remove power to the compass system.

CAUTION

Do not disturb N-S and E-W adjustments of the magnetic compensator when removing the one-cycle cable,

(8) Remove all adapter cables and return the system to its original configuration.

d. Perform system error compensation for reference Nos. 2 and 6 as follows:

CAUTION

Do not disturb N-S and E-W adjustments of the magnetic compensator when removing the adapter cable.

(1) Remove the one-cycle adapter cable from the compass transmitter. Connect aircraft wiring and compensator to the compass transmitter.

(2) Connect the compass calibrator to the aircraft compass system as shown in figure 9-17.

(3) Apply power to the compass system.

(4) Set the control console switches as follows:

(a) MODE SELECTOR: IND.
(b) READOUT SELECT: EXT CX.
(c) POWER ON-POWER OFF: POWER ON.

(5) Adjust the VOLTS ADJUST control until the EXC VOLTS meter indicates 23.5 volts.

(6) Set the HEADING SELECTOR switch in 150 increments. At each heading, synchronize the compass system with the synchronizing control on the compass indicator. Record the heading errors as read on the ERROR readout in table F2 of the swing data sheet.

NOTE

Synchronization is accomplished by pressing and rotating the synchronizing knob in the direction of the symbol appearing in the annunciator window until the window is blank.
Allow sufficient time for system synchronization to settle out before recording error readings.

(7) Set the POWER ON-POWER OFF SWITCH to POWER OFF.

(8) Remove power to the compass system.

(9) Remove all adapter cables and return the system to its original configuration.

e. Perform system error compensation for reference No. 7 as follows:

(1) Disconnect the CX-10939/ASN from cable (W2).

(2) Connect the compass calibrator to the aircraft compass system in accordance with figure 9-18.

(3) Apply power to the compass system.

(4) Set the control console switches as follows:

(a) MODE SELECTOR: IND.
(b) READOUT SELECT: EXT CX,
(c) POWER ON-POWER OFF: POWER ON.

(5) Adjust the VOLTS ADJUST control until the EXC VOLTS meter indicates 23.5 volts.

(6) Set the HEADING SELECTOR switch in 150 increments. Synchronize Compass System MA-1 with its controller, and adjust Compensator KE-28 to obtain zero error at each heading as read on the ERROR readout. Make recordings in table F2 of the swing data sheet.

NOTE

Allow sufficient time for slaving signal to reach a null after synchronizing the system.

(7) When the system is fully compensated, remove all adapter cables and return the system to its original configuration.

f. Perform one-cycle and system error compensation for reference No. 3 as follows:

(1) Connect the compass calibrator to the aircraft compass system in accordance with figure 9-17.

(2) Apply power to the compass system.

(3) Set the control console switches as follows :

(a) E1 NORM.-E1 REV.: E1 NORM.

(b) E2 NORM.-E2 REV.: E2 NORM.

(c) AREA COMP to value on line A-6 of swing data sheet.

(d) E1 CHECK-E2 CHECK: OFF.

(e) Δ 180 MINUTES and polarity to value on line D-3 of swing data sheet.

(f) Δ 270 MINUTES and polarity to value on line D-4 of swing data sheet.

(g) MODE SELECTOR : MON.

(h) HEADING SELECTOR : 0 DEGREES.

(i) FV SELECT:

1. For ML-1: 1.
2. For DT-309/AJN and T-611/ASN: 2.

(j) READOUT SELECT: F.V.

(k) POWER ON-POWER OFF: POWER ON.

(4) Adjust the VOLTS ADJUST control until the EXC VOLTS meter indicates 23.5 volts.

(5) Record the ERROR readout indication as monitor zero error in line F-1 of the swing data sheet.

(6) Determine the MISAL switch settings from the equation given in section F of the swing data sheet. Record this value on line F-2 of the swing data sheet. Set the MISAL MINUTES and polarity switches to this value.

(7) Be sure that E1 CHECK, E2 CHECK, Δ 180 MINUTES, and Δ 270 MINUTES and polarity settings have not been changed from those values recorded on lines C-3, C-4, D-3 and D-4 of the swing data sheet. Record these values on lines F-3 through F-6 of the swing data sheet.

(8) Set the E1 CHECK-E2 CHECK switch to E1 CHECK.

(9) Set the READOUT SELECT switch to 90.

(10) Adjust the E1 VOLTS controls until the NULL INDICATOR meter indicates a null. Record the E1 VOLTS control settings on line F-7 of the swing data sheet.

(11) Set the E1 CHECK-E2 CHECK switch to E2 CHECK.

(12) Adjust the E2 VOLTS controls until the NULL INDICATOR meter indicates a null. Record the E2 VOLTS control settings on line F-8 of the swing data sheet,

(13) Set the E1 CHECK-E2 CHECK switch to OFF.

(14) Set the control console switches as follows :

(a) MODE SELECTOR: IND.

(b) READOUT SELECT: EXT CX.

(15) Set the HEADING SELECTOR switch to 0 DEGREES. Synchronize the compass system with the synchronizing control on the compass indicator.

NOTE

Synchronization is accomplished by pressing and rotating the synchronizing knob in the direction of the symbol appearing in the annunciator window until the window is blank.

(16) Alternately adjust the compensator N-S screw and synchronize the compass system until the HEADING and ERROR readout indicates 0 DEGREES ±15 MINUTES. Record the error in table F1 of the swing data sheet.

NOTE

Allow sufficient time for system synchronization to settle out before recording error readings.

Use the nonmagnetic (brass) screwdriver from the alignment equipment to adjust compensator.

(17) Set the HEADING SELECTOR switch to 90 DEGREES. Alternately synchronize the compass system and adjust the compensator E-W screw until the HEADING and ERROR readout indicates 90 DEGREES ±15 MINUTES. Record the error in table F1 of the swing data sheet.

(18) Set the HEADING SELECTOR switch to 180 DEGREES. Alternately synchronize the compass system and adjust the compensator N-S screw to remove one-half the initial error. Record the error in table F1 of the swing data sheet.

(19) Set the HEADING SELECTOR switch to 270 DEGREES. Alternately synchronize the compass system and adjust the compensator E-W screw to remove one-half the initial error. Record the error in table F1 of the swing data sheet.

(20) Set the HEADING SELECTOR switch to 0, 90, 180, and 270 DEGREES. Synchronize the compass system at each heading and record the ERROR readout indications in table F1 of the swing data sheet.

(21) The error at 0° shall equal the error at 180° (N-S) within ±12 minutes. The error at 90° shall equal error at 2700 (E-W) within ±12 minutes. If necessary, repeat compensation beginning with (15) above,

(22) Set the HEADING SELECTOR switch in 150 increments. Synchronize the compass system at each heading and record the ERROR readout indications in table F2 of the swing data sheet.

NOTE

Allow sufficient time for slaving signal to reach a null after synchronizing the system,

(23) Set the POWER ON-POWER OFF switch to POWER OFF.

(24) Remove power to the compass system.

(25) Remove all adapter cables and return the system to its original configuration.

g. Perform one-cycle, index, transmission, and system error compensation for reference No. 5 as follows:

(1) Set up the equipment and the compass system as follows:

(a) Connect the compass calibrator to the aircraft compass system in accordance with figure 9-19.

(b) Set the compass system remote magnetic compensator controls as shown in figure 9-20.

(c) Apply power to compass system.

(d) Set the control console switches as follows :

1. E1 NORM.-E1 REV. : E1 NORM.

2. E2 NORM-E2 REV.: E2 NORM.

3. AREA COMP to value on line A-6 of swing data sheet.

4. E1 CHECK-E2 CHECK: OFF.

5. Δ180 MINUTES and polarity to value on line D-3 of swing data sheet.

6. Δ270 MINUTES and polarity to value on line D-4 of swing data sheet.

7. MODE SELECTOR: IND.

8. HEADING SELECTOR: 0 DEGREES.

9. FV SELECT:

a. For ML-1: 1.

b. For DT-309/AJN and T-611/ASN: 2.

10. READOUT SELECT: 0.

11. POWER ON-POWER OFF: POWER ON.

(e) Set the compass swinging switch on the compass system amplifier power supply to the up position.

(f) Rotate the HEADING SELECTOR switch in 15° increments and observe the heading indicator in the digital controller. Its operation shall be to follow the heading change and stop with a response characteristic of damped oscillations. If it does not, adjust the compass system fast swing gain (amplifier power supply, Sperry part No. 2589226-1 only).

NOTE

To adjust the fast swing gain, rotate variable resistor 1R16, below the handle on the amplifier power supply front panel, fully counterclockwise. Rotate 1R16 clockwise until a 15° heading change causes a continued oscillation in the digital controller heading indicator; then, rotate 1R16 counterclockwise until the oscillations stop. Check to see that the desired operation with damped oscillation has been achieved.

(2) Determine magnetic field changes in the area as follows:

(a) Set the control console switches as follows :

1. MODE SELECTOR: MON.

2. HEADING SELECTOR: 0 GREES.

3. READOUT SELECT: F.V.

(b) Adjust the VOLTS ADJUST

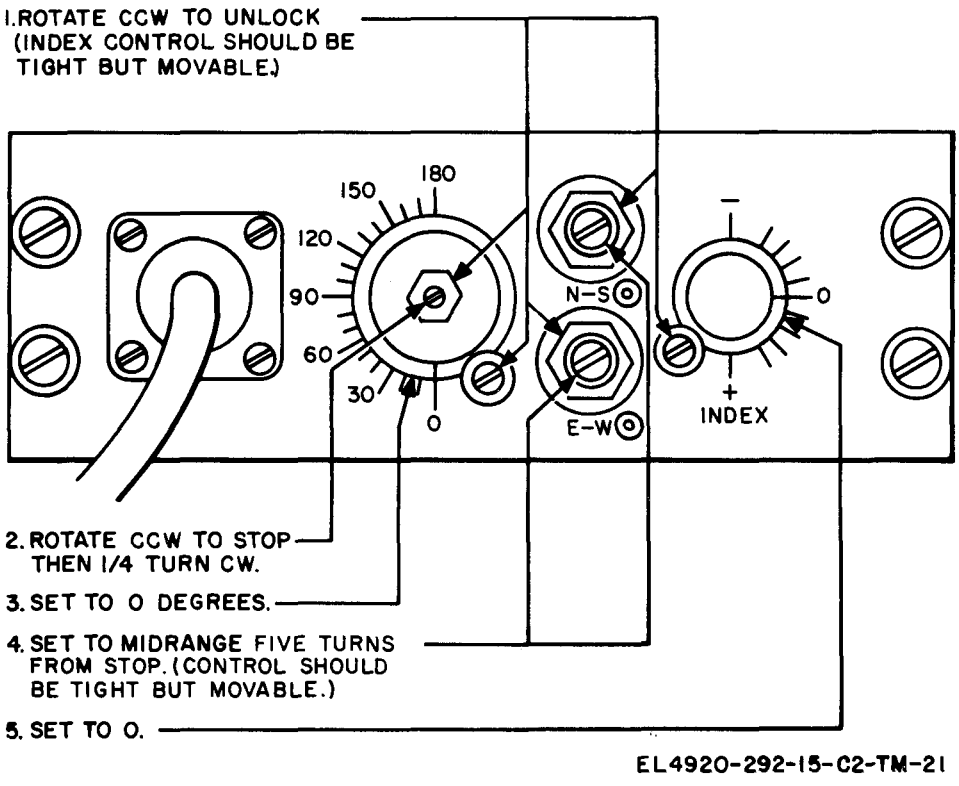

Figure 9-20. Remote magnetic compensator (part No. 2586257-1) controls.

trol until the EXC VOLTS meter indicates 23.5 volts.

(c) Record the ERROR readout indication as monitor zero error on line F-1 of the swing data sheet.

(d) Determine the MISAL switch settings from the equation given in section F of the swing data sheet. Record on line F-2 and set the MISAL MINUTES and polarity switches to this value.

(e) Be sure that E1 CHECK, E2 CHECK, Δ180 MINUTES, and Δ270 MINUTES controls and polarity settings have not been changed from those recorded on lines C-3, C-4, D-3, and D-4 of the swing data sheet. Record these values on lines F-3 through F-6 of the swing data sheet.

(e) Set the E1 CHECK-E2 CHECK switch to E1 CHECK.

(g) Set the READOUT SELECT switch to 90.

(h) Adjust the E1 VOLTS controls until the NULL INDICATOR meter indicates a null. Record the E1 VOLTS control settings on line F-7 of the swing data sheet.

(i) Set the E1 CHECK-E2 CHECK switch to E2 CHECK.

(j) Adjust the E2 VOLTS control until the NULL INDICATOR meter indicates a null. Record the E2 VOLTS control settings on line F-8 of the swing data sheet.

(k) Set the E1 CHECK-E2 CHECK switch to OFF.

(3) Determine one-cycle and index errors as follows:

(a) Set the control console switches as follows:

1. MODE SELECTOR: IND.
2. READOUT SELECT: 0.

(b) Adjust the remote magnetic compensator N-S compensator control to obtain 0° heading on the digital controller.

(c) Set the HEADING SELECTOR switch to 180 DEGREES.

(d) Adjust the remote magnetic compensator N-S compensator control to remove

one-half the initial error; *for example,* if the digital controller indicates 180.6°, adjust the N-S compensator control until the digital controller indicates 180.3°.

(e) Set the HEADING SELECTOR switch to 90 DEGREES.

(f) Adjust the remote magnetic compensator E-W compensator control to obtain a 900 heading on the digital controller.

(g) Set the HEADING SELECTOR switch to 270 DEGREES.

(h) Adjust the remote magnetic compensator E-W compensator control to remove one-half the initial error; *for example, if* the digital controller indicates 269.3°, adjust the E-W compensator control until the digital controller indicates 269.65°.

(i) Set the HEADING SELECTOR switch to O, 90, 180, and 270 DEGREES. Record errors indicated by the digital controller at each heading in table F1 of the swing data sheet.

NOTE

If the digital controller indication is greater than the HEADING SELECTOR switch setting, the error is positive; if it is less, the error is negative,

(j) Determine the index error by adding the four errors algebraically and dividing the sum by 4,

(k) Set the HEADING SELECTOR switch to 0 DEGREES, Remove the index error by turning the remote magnetic compensator INDEX knob until the heading indication changes by an amount equal to and opposite the index error.

(l) Tighten the remote magnetic compensator INDEX control locking screw and check to see that the digital controller heading indication does not change,

(m) Set the HEADING SELECTOR switch to 0, 90, 180, and 270 DEGREES. Record errors indicated by the digital controller at each heading in table F1 of the swing data sheet.

(n) Compute the N-S error by algebraically subtracting the error at 1800 from the error at 00 and dividing the results by 2. Set the HEADING SELECTOR switch to 0 DEGREES. Remove the N-S error by adjusting the remote magnetic compensator N-S control until the heading indication changes by an amount equal to and opposite the computed N-S error.

(o) Tighten the compensator N-S control locking nut and check to see that the digital controller heading indication does not change.

(p) Compute the E-W error by algebraically subtracting the error at 270° from the error at 900 and dividing the result by 2. Set the HEADING SELECTOR switch to 90 DEGREES. Remove the E-W error by adjusting the remote magnetic compensator E-W control until the heading indication changes by an amount equal to and opposite the computed E-W error.

(g) Tighten the compensator E-W control locking nut and check to see that the digital controller heading indication does not change.

(r) Set the HEADING SELECTOR switch to 0, 90, 180, and 270 DEGREES. Record errors indicated by the digital controller at each heading in table F1 of the swing data sheet,

(s) Error at 0° shall equal error at 180°, and error at 900 shall equal error at 270° within ±0.2 degree.

(4) Determine transmission (two-cycle) (two cycle) error as follows:

(a) Set the HEADING SELECTOR switch to 0, 45, 90, 135, 180, 225, 270, and 315 DEGREES. Record errors indicated by digital controller at each heading in table F2 of the swing data sheet,

(b) Compute the D and E coefficients as follows:

$$D = \tfrac{1}{4}\,(\Sigma_{45} - \Sigma_{135} + \Sigma_{335} - \Sigma_{315})$$
$$E = \tfrac{1}{4}\,(\Sigma_{0} - \Sigma_{90} + \Sigma_{180} - \Sigma_{270})$$

(c) Graphically determine the magnitude and direction of the error coefficient. (Refer to graph in figure 9-21.)

(d) Draw a horizontal line between the D and D' scales at the calculated value of the D coefficient, and draw a vertical line between the E and E' scales at the calculated value of the E coefficient; then draw a line from the center of the figure through the intersection of these lines. This line determines the magnitude and direction of the transmission error.

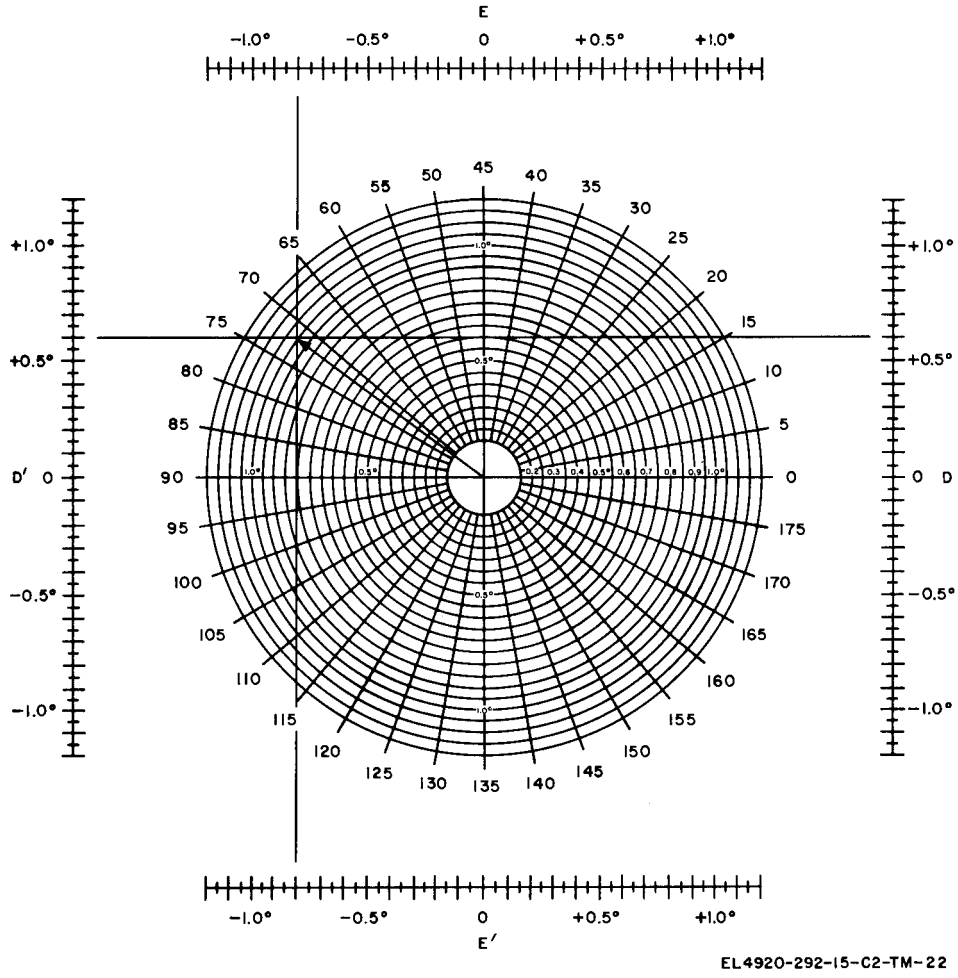

Figure 9-21. Transmission error correction graph.

(e) The magnitude of the transmission error is the length of the line from the center of the figure to the intersection point and is read on the concentric ring scale.

(f) The direction of the transmission error is determined by the intersection of the line with the polar scale.

(5) Remove transmission error as follows:

(a) Set the remote magnetic compensator TRANSMISSION outer control knob to the direction of the transmission error and tighten the locking screw.

(b) Set the HEADING SELECTOR switch to the heading division nearest the direction of the transmission error.

(c) Rotate the center slotted shaft of the TRANSMISSION control until the heading indicated on the digital controller decreases by the magnitude of the transmission error ((4) *(e)* above). Tighten the center locking nut on the TRANSMISSION control.

(6) Update the control console voltages for magnetic field changes. If the compensation procedure required more than 45 minutes, repeat the procedures given in (2) above.

(7) Perform 24-heading electrical swing as follows:

(a) Set the control console switches as follows :

1. MODE SELECTOR: IND.
2. READOUT SELECT: 0.

(b) Set the HEADING SELECTOR switch in 15° increments. Record errors as in-

dicated by the digital controller in table F2 of the swing data sheet.

(c) Determine the remaining compass system error. Square each error and add the values. If this total is greater than 1.5, the system is not properly calibrated. Set the remote magnetic compensator TRANSMISSION ERROR controls as indicated in figure 9-20 and repeat calibration procedures.

NOTE

The total value of 1.5 is equivalent to an rms error of 0.25°. If the rms error is desired, divide the total of the added values by 24 and compute the square root of the result.

(d) When the system is fully compensated, remove all adapter cables and return the system to its original configuration.

SECTION X

MK-1040A/ASN MAINTENANCE

10-1. Scope of Maintenance

The maintenance duties assigned to the operator of MK-1040A/ASN are listed below together with a reference to the paragraphs covering the specific maintenance function. These duties do not require special tools or test equipment.

a. Preventive maintenance (para 10-2).

b. Cleaning (para 10-3).

c. Touchup painting (para 10-4).

d. Troubleshooting (para 10-5).

10-2. Preventive Maintenance

Preventive maintenance is the systematic care, servicing, and inspection of the MK-1040A/ASN to prevent the occurrence of trouble, reduce downtime, and assure that the adapters are serviceable.

10-3. Cleaning

Inspect the exterior surfaces of the CY-6508/ASN and internal adapters. Exterior surfaces should be free of dust, dirt, grease, and fungus.

a. Remove dust and loose dirt with a clean, soft cloth.

WARNING

The fumes of trichloroethane are toxic. Provide thorough ventilation whenever used. DO NOT use near an open flame. Trichloroethane is not flammable but exposure of fumes to an open flame converts the fumes to highly toxic, dangerous gases.

b. Remove grease, fungus, and ground-in dirt from the CY-6508/ASN; use a cloth dampened (not wet) with trichloroethane.

c. Remove dust or dirt from plugs and jacks with a brush.

10-4. Touchup Painting

Remove rust and corrosion from metal surfaces by lightly sanding them with fine sandpaper. Brush two thin coats of paint on the bare metal for protection against further corrosion. Refer to applicable cleaning and refinishing practices specified in TB 746-10.

10-5. Troubleshooting

Troubleshooting the MK-1040A/ASN consists of performing continuity and insulation resistance tests on the adapter cables using Multimeter AN/USM-223 and Ohmmeter ZM-21/U. Refer to schematic diagrams shown in figures 10-1 through 10-8.

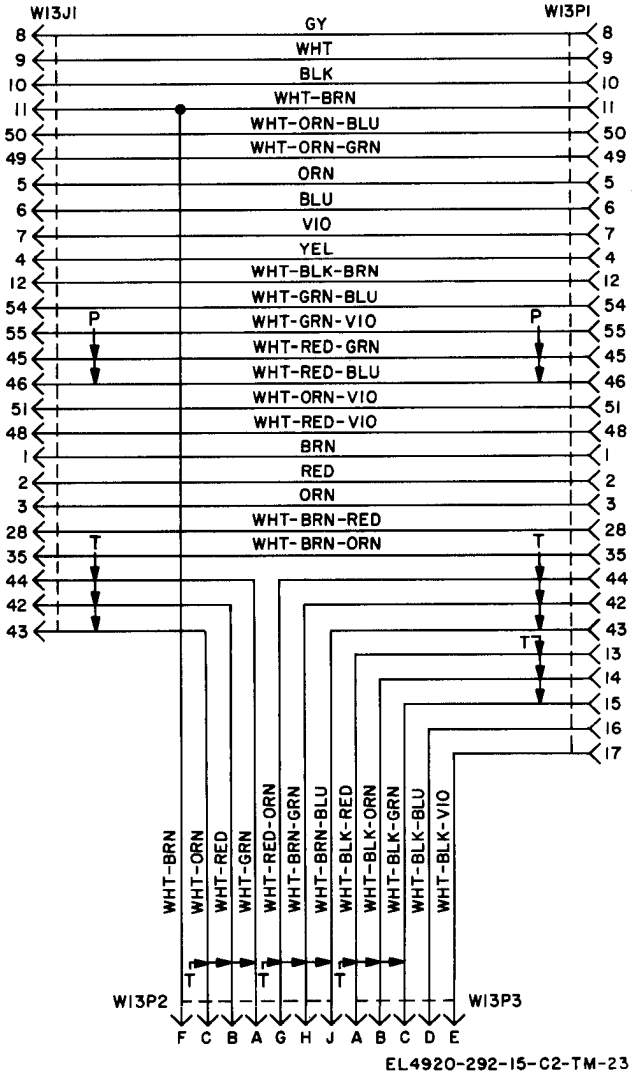

Figure 10-1. CX-10934/ASN schematic diagram.

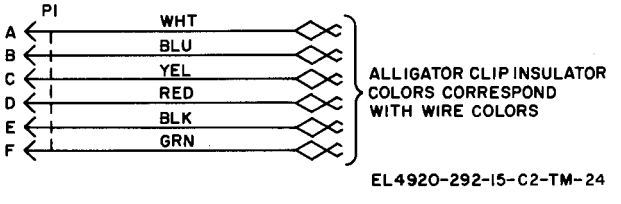

Figure 10-2. CX-10935/ASN schematic diagram.

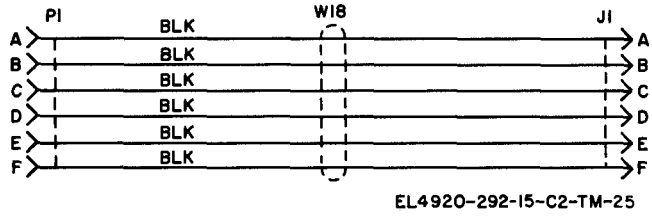

Figure 10-3. CX-10936/ASN schematic diagram.

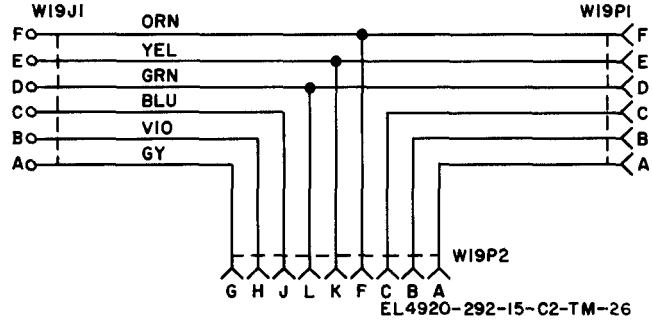

Figure 10-4. CX-10937/ASN schematic diagram.

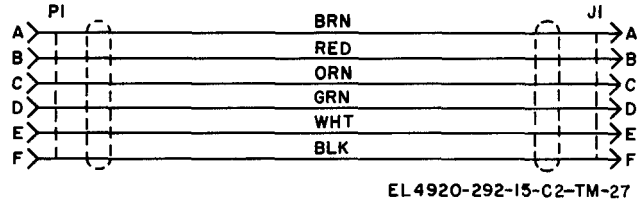

Figure 10-5. CX-10938/ASN schematic diagram.

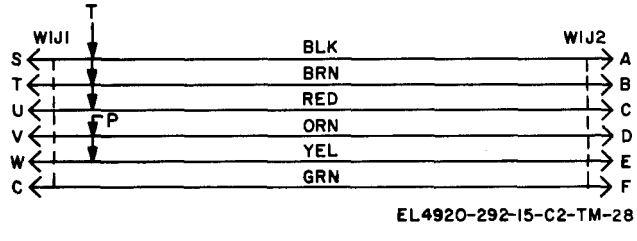

Figure 10-6. CX-10939/ASN schematic diagram.

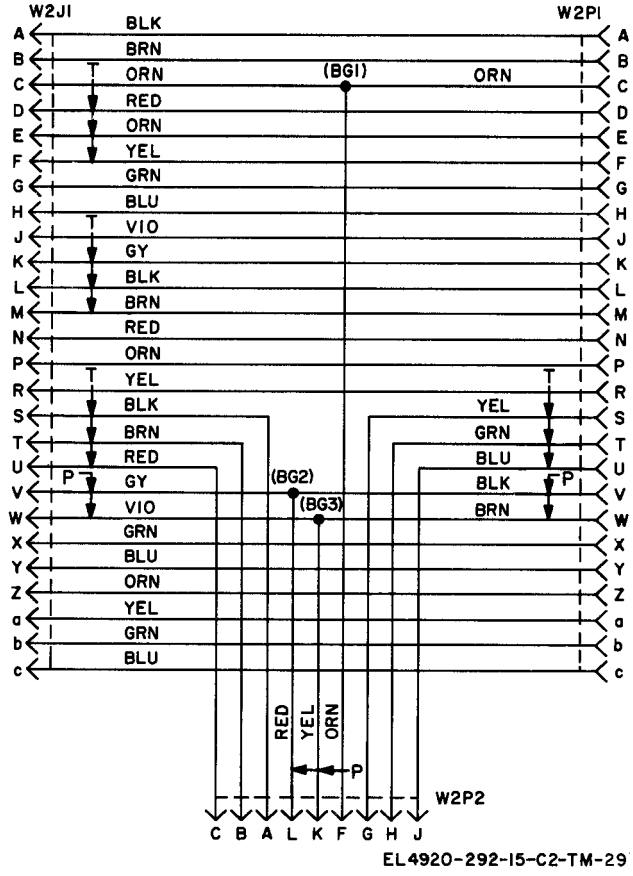

Figure 10-7. CX-10940/ASN schematic diagram.

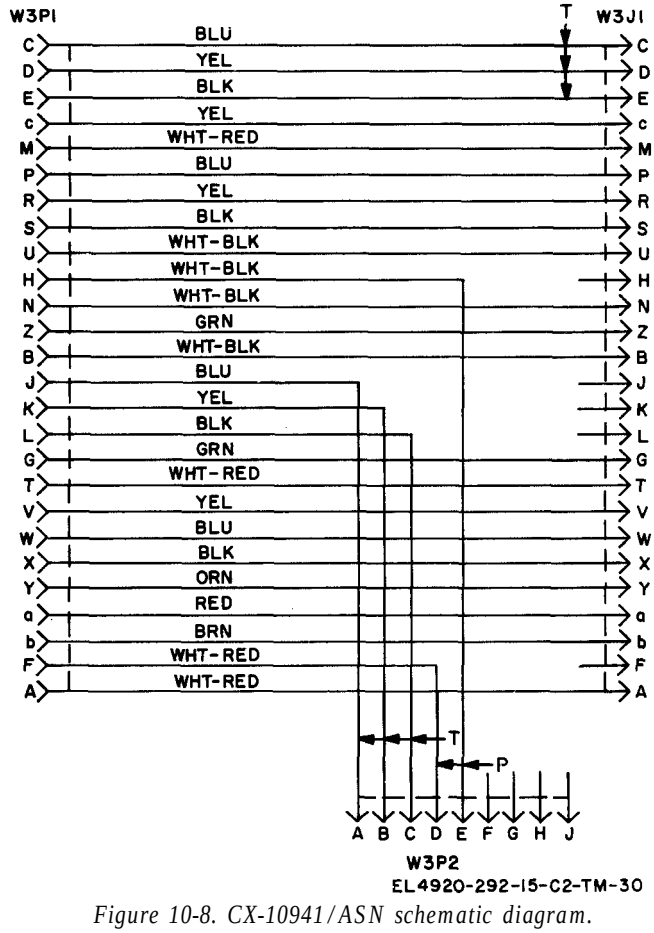

Figure 10-8. CX-10941/ASN schematic diagram.

SECTION XI

DEPOT OVERHAUL STANDARDS

11-1. Applicability of Depot Overhaul Standards

Magnetic Compass Calibrator Set AN/ASM-339 (V) 1 (compass calibrator) and Magnetic Compass Calibrator Set Adapter Kit MK-1040A/ASN must be tested thoroughly after rebuild or repair to insure that they meet adequate performance standards for return to stock or reissue. Use the tests described in this section to measure the performance of the repaired equipment. It is mandatory that repaired equipments to be reissued, or returned to stock for reissue, meet all of the performance standards given in this section.

11-2. Applicable References

a. Repair Standards. Applicable procedures of the Army depot performing these tests and its general standards for repaired signal equipment form a part of the requirements for testing this equipment.

b. Modification Work Orders. Perform all modification work orders applicable to this equipment before performing the tests specified. DA Pam 310-7 lists all available modification work orders.

11-3. Assigned Nomenclature for the AN/ASM-339(V)1

The following table identifies common names used in the text with the applicable military nomenclature:

Common name	Army nomenclature
Compass calibrator	Calibrator Set Magnetic Compass AN/ASM-339-(V)1.
Control console	Control, Magnetic Compass Calibrator C-7694/ASM-339(V).
Cable W1	Cable Assembly, Special Purpose, Electrical CX-10868/U (100 foot).
400-cycle power supply	Power Supply PP-6056/ASM-339(V).
Field tester	Field Tester, Magnetic Compass Calibrator AN/ASM-344.
Cable W4	Cable Assembly, Special Purpose, Electrical, Branched CX-10869/ASM-344.
Monitor assembly	Monitor Assembly MX-8113/ASM-339(V).
Turntable assembly	Turntable Assembly, Remote Transmitter MX-8111/ASM-339(V).
Magnetic azimuth reference detector.	Detector Assembly, Magnetic Azimuth DT-354/ASM-344.
Cable W2	Cable Assembly, Special Purpose, Electrical CX-10867/U (50 foot).
Tripod	Tripod, Electronic Equipment MX-8114/U.
Cable W3	Cable Assembly, Special Purpose, Electrical CX-10867/U (200 foot).

11-4. Test Facilities Required for Depot Testing of the AN/ASM-339(V)1

The following items are required:

Test equipment	Literature	Common name
Multimeter TS-352B/U.	TM-11-6625-366-12	Multimeter
Simulator, Gyro and Compass Signal SM-486/ASN.		
Simulator adapter cable (fabricated, see fig. 11-3.	TM-11-6615-251-12	Simulator

11-5. Field Tester De Continuity Check

a. Make sure that the field tester is disconnected from any other item of equipment.

b. Set the multimeter to indicate in ohms and connect it successively across the test points listed in the following table. Check for resistante values as listed for the designated settings.

From-		Switch positions S1	S2	S3	Multimeter resistance range	Resistance (ohms)
5J1–A	5J1–B	----------	----------	----------	X1	0 to 0.01
J1–A	J1–C	----------	----------	----------	X1	0 to 0.01
J1–F	J2–T	----------	----------	----------	X1	0 to 0.01
J2–B	J2–N			----------	X1	0 to 0.01
J2–H	J3	OFF	E1	----------	X1	0 to 0.01
J2–B	J4	----------	E1	----------	X1	0 to 0.01
J2–K	J3	----------	E2	----------	X1	0 to 0.01
J2–J	J4	----------	E2	----------	X1	0 to 0.01
J2–H	J3	E1/E2 --		OFF	X1	0 to 0.01
J2–K	J4	----------	E1/E2	----------	X1	0 to 0.01
J3	J4	----------	E1	E1	X10,000	18K ± 1.8K
J2–K	J4	----------	E1	E2	X10,000	56K ± 5.6K
5J2-H	5J2–A	1	----------	OFF	X10,000	100K ± 10K
5J2–H	5J2–C	2	----------	----------	X10,000	100K ± 10K
J2–H	J2–B	3	----------	----------	X10,000	100K ± 10K
J2–G	J2–F	1	----------	----------	X1	0 to 0.1
J2–G	J2–F	2	----------	----------	X1	0 to 0.1
J2–G	J2–F	3	----------	----------	X1	0 to 0.1
J3–S	J1–F	DEMAG	----------	----------	X1	77.0 ± 7.7
5J1–A	5J1–F	OFF	E1	OFF	X1	Step –5c

c. Resistance shall vary smoothly and uniformly from 0 to 50 ±7 ohms to 0 as R1 is slowly rotated from the fully counterclockwise position to fully clockwise and back to fully counterclockwise.

11-6. Magnetic Azimuth Reference Detector Valve Continuity Test

CAUTION

Do not allow more than 1.0 milliampere to flow through valve sensing element. More than 1.0 milliampere will magnetize the element.

a. Set multimeter selector switch to position Rx 100.

b. Connect multimeter ground test probe to common connection of the three secondary coils of the valve assembly and pin F or magnetic azimuth reference detector connector P2.

c. Using continuity test probe, check continuity of valve secondary coils. When the continuity test probe makes contact with pin, A, B, or C of connector P2, the multimeter shall indicate from 10 to 50 ohms.

d. Connect multimeter ground test probe to pin E of connector P2 and the continuity probe to pin D. The multimeter shall indicate 100 to 200 ohms.

11-7. Power Test

a. Set controls as follows:

Control	*Position*
Control console:	
All controls ---	OFF, 0, or fully counterclockwise

Note. The E1 CHECK, E2 CHECK, and AREA COMP controls will not necessarily indicate 0-0 when controls are fully counterclcock wise. Do not adjust dials to 0. E1 VOLTS vernier and E2 VOLTS vernier shall indicate 0-0 when controls are fully counterclockwise.

Field tester:	
All controls ---	OFF, 0, or fully counterclockwise

b. Using the field tester with cable W4, connect the equipment as shown in figure 11-1.

c. Connect cable W1 between J805 of 400-cycle power supply and 1J1 POWER of control console.

d. Connect cable W4 between 5J2 INPUT of field tester and 1J4 EXT CX & TEST and 1J3 MONITOR of control console.

e. Connect J803 of 400-cycle power supply to 28-volt dc power source.

f. Set POWER ON-POWER OFF switch of control console to POWER ON. POWER ON indicator shall light and FREQUENCY meter shall indicate 400 ± 5 cycles. If these values are not obtained, perform steps *g* and *h*, below.

g. Check $1^1/_2$-ampere fuses. Replace defective fuse.

h. Check indicator lamp. Replace defective lamp.

i. Set MODE SELECTOR to CAL and adjust VOLTS ADJUST control until EXC VOLTS meter indicates 23.5 volts.

j. Rotate MODE SELECTOR clockwise to MON, COMP, and IND positions successively while observing EXC VOLTS meter at each setting. EXC VOLTS meter shall indicate 23.5 volts in MON and IND positions of MODE SELECTOR and 0 volt in COMP position.

k. Set E1 NORM-El REV switch to E1 NORM. El NORM indicator shall light.

l. Set E1 NORM-El REV switch to E1 REV. El REV indicator shall light.

m. Set E2 NORM-E2 REV switch to E2 NORM. E2 NORM indicator shall light.

n. Set E2 NORM-E2 REV switch to E2 REV. E2 REV indicator shall light.

o. Set E2 NORM-E2 REV switch to OFF.

p. Set E1 CHECK-E2 CHECK switch to E1 CHECK. E1 CHECK indicator shall light.

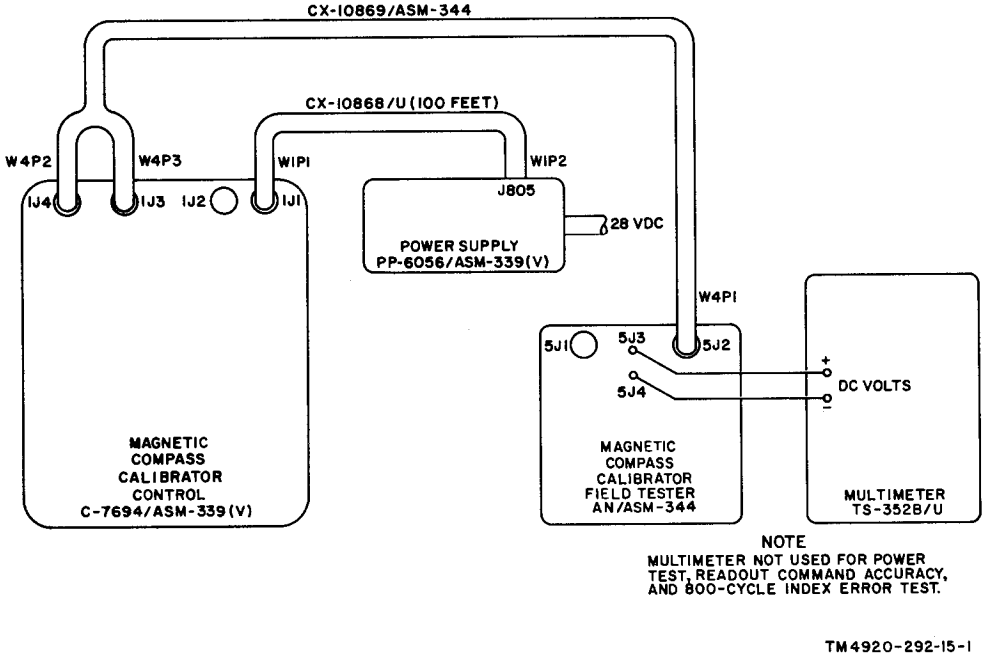

Figure 11-1. Test setup for power test, E1 and E2 range, E1 and E2 load regulation, E1 and E2 line regulation, readout command accuracy, and 800-cycle index error tests.

q. Set E1 CHECK-E2 CHECK switch to E2 CHECK, E2 CHECK indicator shall light.

r. Set E1 CHECK-E2 CHECK switch to OFF.

11-8. E1 Voltage Engage Test

a. Set MODE SELECTOR switch to MON position.

b. Set E1 NORM-E1 REV switch to E1 NORM.

c. Set multimeter to + DC VOLTS and connect to 5J3 and 5J4 (low) of field tester.

d. Set S2 switch of field tester to El position,

e. Rotate E1 VOLTS (6-90) control slowly through each position while observing multimeter indications. Multimeter shall indicate same as E1 VOLTS setting ±5 percent at each position of E1 VOLTS control.

f. Set E1 VOLTS (5-90) to 6. Rotate E1 VOLTS (1-10) slowly through each position while observing multimeter indications. Multimeter shall indicate sum of E1 VOLTS (5-90 and 1-10) settings ±5 percent at each position.

g. Set E1 VOLTS (0-10) to 0. Set El vernier to 500. Multimeter shall indicate 6.00 ±0.30 volts.

h. Set E1 vernier to 1000. Multimeter shall indicate 7.00 ±0.35 volts.

i. Set E1 vernier to 0.

11-9. E2 Voltage Range Test

a. Set E1 NORM-El REV to OFF.

b. Set S2 switch on field tester to E2.

c. Repeat paragraph 11-8, substituting E2 for all references to E1.

11-10. E1 and E2 Load Regulation Test

a. Set switch S2 on field tester to E1/E2 position.

b. Set E1 NORM-E1 REV to E1 NORM,

c. Set E1 VOLTS and E2 VOLTS controls to 90-9-500.

d. Adjust E2 vernier until multimeter indicates 0 volt.

e. Set switch S3 on field tester to E1 position, OFF, E2 position, and then OFF while observing multimeter indications. Multimeter shall indicate 50 millivolts or less in each position.

NOTE

Disregard momentary deflections exceeding 50 millivolts,

11-11. E1 and E2 Line Regulation Test

a. Set switch S3 to OFF position.

b. Adjust VOLTS ADJUST control for indication of 22.5 volts on EXC VOLTS meter; then adjust VOLTS ADJUST control for 24.5 volts on EXC VOLTS meter. Multimeter shall indicate 50 millivolts or less at each position of VOLTS ADJUST control.

NOTE

Disregard momentary deflections exceeding 50 millivolts.

c. Disconnect multimeter from field tester.

11-12. Readout Command Accuracy Test

a. Adjust VOLTS ADJUST control for 23.5 volts on EXC VOLTS meter.

b. Set READOUT SELECT switch to position 0. HEADING and ERROR readout shall indicate 0 DEGREES ±15 MINUTES.

c. Set READOUT SELECT switch to position 90. HEADING and ERROR readout shall indicate 90 DEGREES ±15 MINUTES.

11-13. 800-Cycle Index Error Test

a. Set field tester switch S1 to position 1.

b. Set READOUT SELECT switch to F.V.

c. Set El NORM-El REV switch to El REV.

d. Set E2 NORM-E2 REV switch to OFF.

e. Set E1 VOLTS controls to 90-10-0.

f. Set F.V. SELECT switch to position 2.

g. Adjust VOLTS ADJUST control for 23.5 volts on EXC VOLTS meter.

h. Set field tester switch S1 successively to positions 1, 2, and 3, and record ERROR readout indication at each position. HEADING

readout shall indicate 0, 120, and 240 DEGREES successively,

i. Set E1 NORM-E1 REV switch to E1 NORM, Record ERROR readout indication. HEADING readout shall indicate 60 DEGREES with S1 in position 3.

j. Set switch S1 to position 2 and then to position 1. Record ERROR readout indication at each position. HEADING readout shall indicate 300 DEGREES, then 180 DEGREES.

k. Algebraically add the six errors recorded above and divide the sum by 6. The resultant is the 800-cycle synchro index error and shall not exceed 0 ± 3 minutes.

11-14. 400-Cycle Accuracy and Repeatability Test

a. Set POWER ON-POWER OFF switch to POWER OFF.

b. Disconnect cable W4 from connectors 1J4 and 1J3 of control console.

c. Connect the equipment as shown in figure 11-2.

d. Connect simulator connector J1 to control console connector 1J4, using simulator adapter cable. Simulator adapter cable shall be fabricated in accordance with figure 11-3.

e. Set E1 NORM-E1 REV to OFF.

f. Set READOUT SELECT to EXT CX.

g. Set POWER ON-POWER OFF to POWER ON.

h. Set simulator GYRO XMTR #1 to increasing headings in 15-degree increments from 0 through 360 degrees, using indicated angle values from GYRO XMTR #1 calibration card supplied with simulator. Record ERROR readout indication at each setting. HEADING and ERROR readout indications shall not exceed ± 6 minutes difference from corrected simulator settings.

i. Set READOUT SELECT to 0.

j. Set simulator for 45 degrees.

k. Set READOUT SELECT to EXT CX. Record ERROR readout indication.

l. Set READOUT SELECT to 90.

m. Set READOUT SELECT to EXT CX. ERROR readout indication shall be within ±2 minutes of indication recorded in *k*, above.

n. Set POWER ON-POWER OFF switch to POWER OFF.

o. Disconnect simulator from control console.

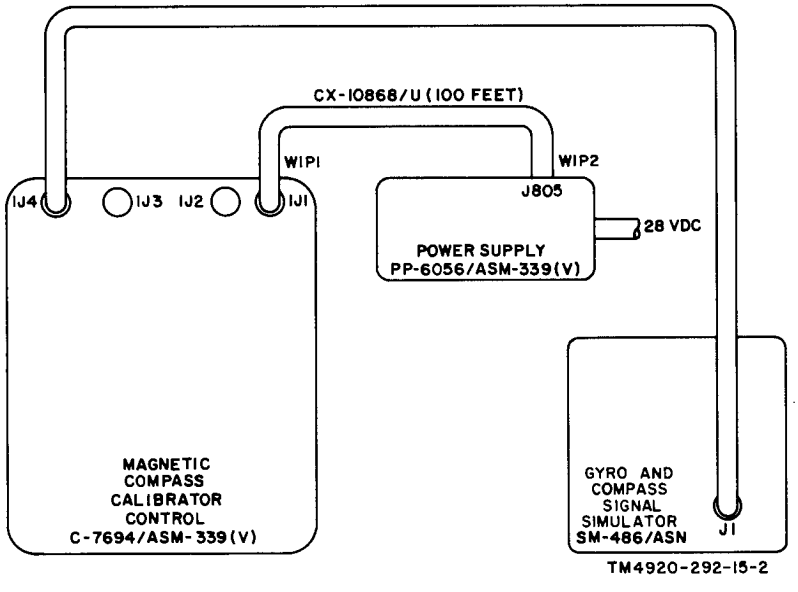

Figure 11-2. Test setup for .400-cycle accuracy and repeatability test.

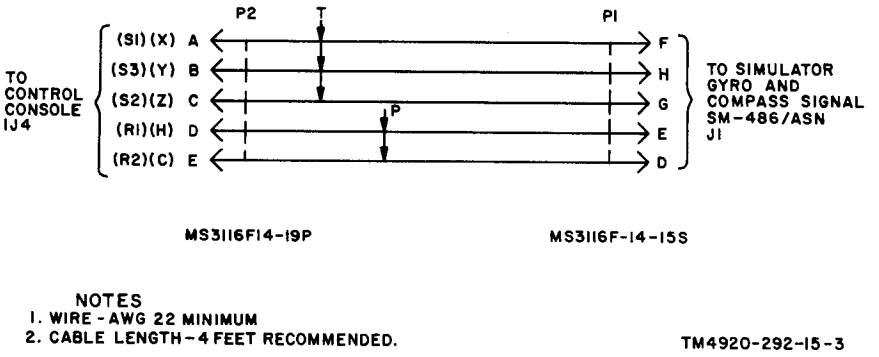

Figure 11-3. Simulator adapter cable for 400-cycle accuracy and repeatability test.

11-15. Monitor Assembly Telescope Alignment Test

a. Set up and level monitor assembly on tripod.

b. Rotate monitor to sight any distant target.

c. Set azimuth scale to 0 degree ±0 minute.

NOTE

Monitor headings are set by loosening lower clamp and rotating monitor to obtain desired setting on azimuth scale. Lower clamp should then be tightened at desired heading and ver. nier used to fine-adjust for exact alignment of monitor scales. To set azimuth scale, upper clamp should be loosened and scale rotated to desired heading. Then upper clamp should be tightened and vernier used to fine-adjust.

d. Rotate telescope 180 degrees in vertical plane.

e. Rotate monitor in horizontal plane to sight some target.

f. Bearing indicated on the azimuth scale shall be 180 degrees ±1 minute.

g. Return the telescope to its original position in the vertical plane.

NOTES

1. All remaining tests (paragraph 11-16, 11-17, 11-18, and 11-19) shall be performed in an area that has been magnetically surveyed. Value for AREA COMP dervied from area magnetic survey is required for use on following test,
2. No personnel shall be within 10 feet of turntable assembly or monitor assembly when readings are being made.
3. Heavy power equipment must be located at least 80 feet from turntable assembly.

11-16. Monitor Assembly Magnetic Alignment Test

a. Set up equipment as shown in figure 11-4.

NOTE

Monitor assembly is not set up initially but will be used later in test.

b. Set up and level turntable assembly at monitor location established during survey.

c. Mount magnetic azimuth reference detector on turntable assembly as shown in figure 11-4.

d. Connect cable W2 between control console connector 1J3 MONITOR and 4J1 of turntable assembly,

e. Set MODE SELECTOR switch to MON.

f. Set READOUT SELECT control to F.V.

g. Set POWER ON-POWER OFF switch to POWER ON.

h. Adjust VOLTS ADJUST control until EXC VOLTS meter indicates 23.5 volts.

i. Rotate turntable until HEADING and ERROR readout indicates 0 DEGREES ±10 MINUTES. Set turntable azimuth scale to 0 degree. Record ERROR readout indication.

j. Rotate turnable to heading of 90, 180, and 270 degrees. Record ERROR readout indication at each heading.

k. Add the four recorded ERROR readout indications algebraically and divide the sum by 4. Record the resultant value as index error (I_1).

l. Rotate turntable to sight a target at a distance of at least $^1/_2$ mile, Record turntable azimuth scale indication as target bearing (B).

NOTE

Target elevation should be within ±5 degrees of horizontal, Use a flagpole or corner of building for target.

NOTE

Power must be off during the following operation if connector on magnetic azimuth reference detector is disconnected.

m. Remove magnetic azimuth reference detector from top of turntable assembly mounting plate and remount in inverted position so that the telescope is below the turnable assembly mounting plate,

n. Rotate turntable to sight on original target.

o. Set aximuth scale to previously recorded target bearing (B).

p. Rotate turntable to headings of 0, 90, 180, and 270 degrees. Record ERROR readout indication at each heading, disregarding the HEADING readout indications (at 90- and 270-degree headings, the HEADING readout indications are 270 and 90, respectively).

q. Add the four recorded errors algebraically and divide the sum by 4. Record the resultant value as index error (I_2).

r. Determine and record the true magnetic bearing of the target (B_{MAG}) by solving the following equation:

$$B_{MAG} = B + \frac{(I_1 - I_2)}{2}$$

NOTE

The remaining steps of this test must be completed within 30 minutes to minimize errors due to shifting of earth's magnetic field.

s. Set POWER ON-POWER OFF switch to POWER OFF.

t. Disconnect cable W2 from turntable assembly.

u. Without moving tripod, remove turntable assembly from tripod.

v. Set up and level monitor assembly on tripod as shown in figure 11-4.

w. Connect cable W2 between control console connector 1J3 MONITOR and monitor assembly.

x. Set POWER ON-POWER OFF switch to POWER ON.

y. Rotate monitor to sight target.

z. Set aximuth scale of monitor to recorded true magnetic bearing (B_{MAG}) of target.

aa. Adjust VOLTS ADJUST control for 23.5 volts on EXC VOLTS meter.

ab. Rotate monitor to headings of 0, 90, 180, and 270 degrees and record ERROR readout indication at each heading,

ac. Determine the monitor index error by adding the four recorded error algebraically and dividing the sum by 4.

ad. Determine the corrected monitor index error by algebraically subtracting the synchro index error (para 11-13k) from the monitor index error *(ac* above) to determine true index error. True index error shall be 0 ±6 minutes.

11-17. E1 and E2 Check Test

a. Rotate monitor to a 0-degree heading.

b. Set E1 CHECK, E2 CHECK, and AREA COMP controls to 500,

c. Set E1 NORM-E1 REV switch to E1 NORM.

d. Set E2 NORM-E2 REV switch to E2 NORM.

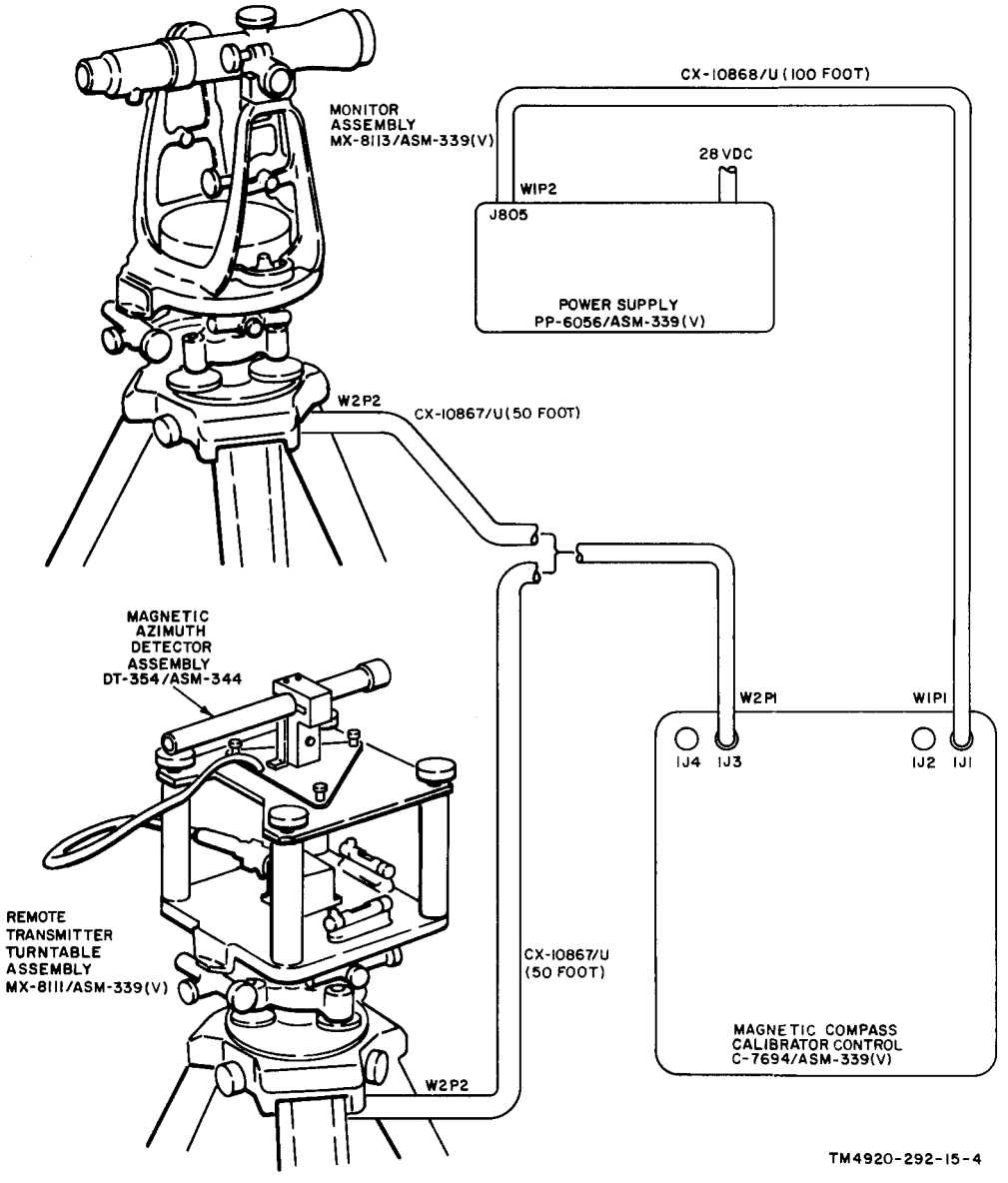

Figure 11-4. Test setup for monitor assembly magnetic alignment test.

e. Set READOUT SELECT switch to 90.

t. Set E1 CHECK-E2 CHECK switch to E1 CHECK,

g. Adjust E1 VOLTS controls to null the NULL INDICATOR meter,

h. Observe that a clockwise rotation of the E1 VOLTS controls vernier will cause a left-scale deflection on NULL INDICATOR.

i. Observe that a clockwise rotation of AREA COMP control will cause a right-scale deflection on NULL INDICATOR.

j. Observe that a clockwise rotation of E1

CHECK control will cause a right-scale deflection on NULL INDICATOR,

k. Set E1 CHECK-E2 CHECK switch to E2 CHECK.

l. Adjust E2 VOLTS controls to null the NULL INDICATOR meter.

m. Observe that a clockwise rotation of the E2 VOLTS controls vernier will cause a left-scale deflection on NULL INDICATOR.

n. Observe that a clockwise rotation of E2 CHECK control will cause a right-scale deflection on NULL INDICATOR.

o. Set POWER ON-POWER OFF switch to POWER OFF.

11-18. Misalignment, Δ180, and Δ270 Range Test

a. Set up equipment as shown in figure 11-5.

b. Set up and level monitor assembly and turntable assembly on tripods at respective locations established during area magnetic survey.

c. Mount magnetic azimuth reference detector on turntable assembly with telescope above turntable assembly plate.

d. Connect cable W3 between control console connector 1J3 MONITOR and connector 3J1 of monitor assembly.

e. Connect cable W2 between control console connector 1J2 TRANS and connector 4J1 of turntable assembly,

f. Set E1 CHECK-E2 CHECK switch to OFF.

g. Set E1 NORM-E1 REV switch to OFF,

h. Set E2 NORM-E2 REV switch to OFF.

i. Set POWER ON-POWER OFF switch to POWER ON.

j. Adjust VOLTS ADJUST control for 23.5 volts on EXC VOLTS meter.

k. Set READOUT SELECT control to F.V.

l. Rotate monitor to sight target established during the area magnetic survey,

m. Set azimuth scale to previously determined target bearing marked at monitor location.

n. Rotate monitor to 0-degree heading. HEADING and ERROR readout shall indicate 0 DEGREES ±30 MINUTES.

o. Set MODE SELECTOR control to CAL.

p. Rotate turntable until HEADING and ERROR readout indicates 0 DEGREES ±10 MINUTES,

q. Set azimuth scale of turntable to 0 degree.

r. Set E1 CHECK, E2 CHECK, and AREA COMP controls to 500.

s. Set E1 NORM-E1 REV switch to E1 NORM.

t. Set E2 NORM-E2 REV switch to E2 NORM.

u. Set READOUT SELECT control to 90.

v. Set MODE SELECTOR control to MON.

w. Set E1 CHECK-E2 CHECK switch to E1 CHECK.

x. Adjust El VOLTS control until NULL INDICATOR indicates a null. Lock E1 VOLTS control.

y. Set E1 CHECK-E2 CHECK switch to E2 CHECK.

z. Adjust E2 VOLTS control until NULL INDICATOR indicates a null. Lock E2 VOLTS control.

aa. Set E1 CHECK-E2 CHECK switch to

ab. Set MODE SELECTOR control to CAL,

ac. Set READOUT SELECT control to F.V.

ad. Set MISAL polarity switch to +MISAL.

ae. Record readout ERROR.

af. Rotate MISAL MINUTES switch clockwise, step by step. Readout ERROR shall change in-a negative direction in increments of about 3 minutes for each position. At +120 minutes, the error shall be 120 ±4 minutes more negative than error recorded in step *ae,* above.

ag. With MISAL MINUTES switch at 120, set MISAL polarity switch to - MISAL, The error shall be 120 ±4 minutes more positive than error recorded in step *ae,* above.

ah. Rotate MISAL MINUTES switch to 0.

ai. Set Δ180 polarity switch to + Δ180,

aj. Set HEADING SELECTOR to 180 DEGREES.

ak. Record readout ERROR.

al. Rotate Δ180 MINUTES switch clockwise, step by step. Readout ERROR shall change in a negative direction in increments of about 3 minutes for each position. At +60 minutes, the error shall be 60 ± 3 minutes more negative than error recorded in *ak* above.

am. With A 180 MINUTES switch at 60, set Δ180 polarity switch to - Δ180. Readout error shall be 60 ± 3 minutes more positive than error recorded in step *ak*, above.

an. Rotate Δ180 MINUTES switch to 0.

ao. Set Δ270 polarity switch to + Δ270.

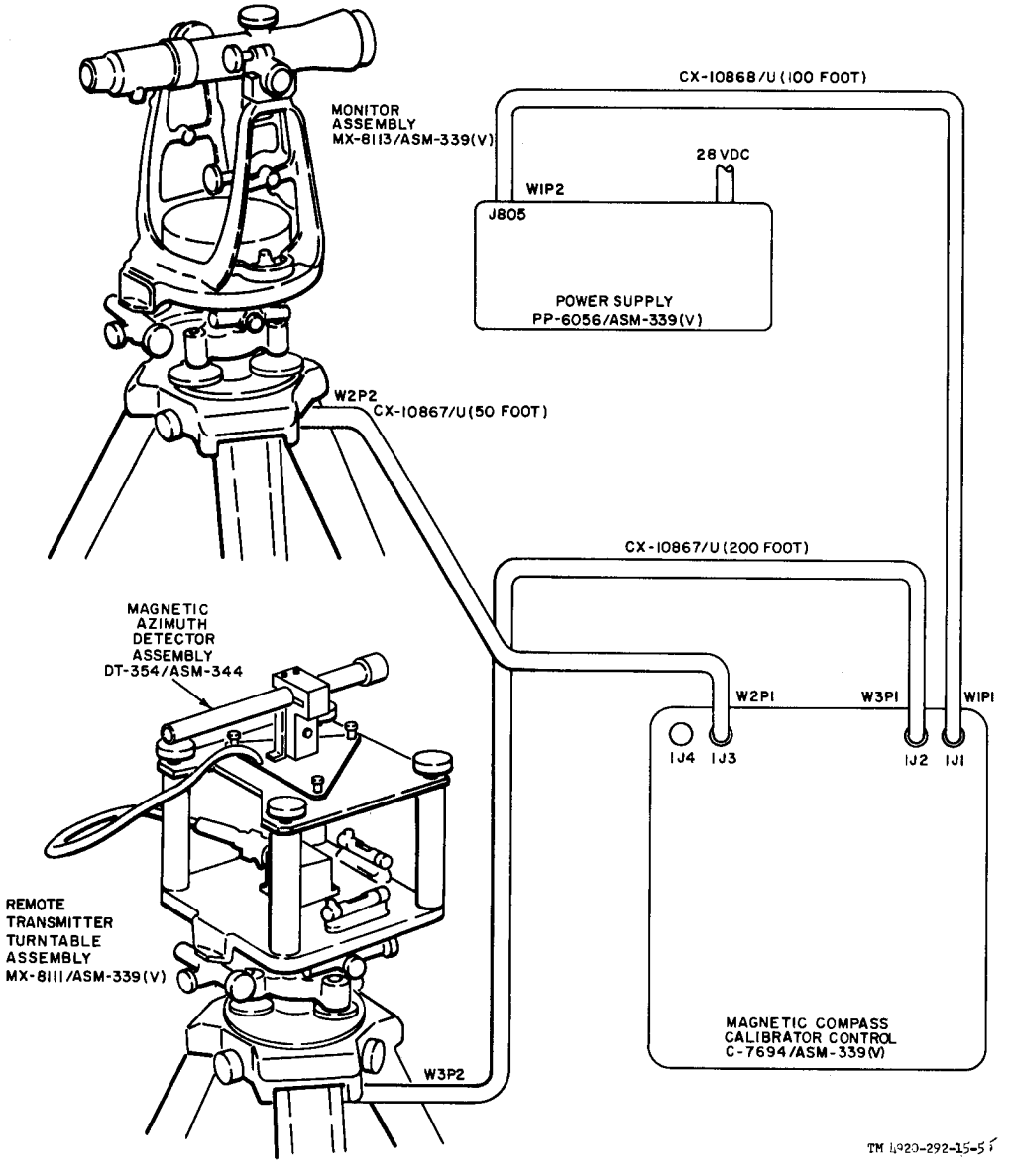

Figure 11-5. Teet setup for misalignment, range test, and monitor assembly manual and electrical swing test.

ap. Set HEADING SELECTOR to 270 DEGREES.

aq. Record readout ERROR.

ar. Rotate Δ270 MINUTES switch clockwise, step by step. Readout error shall change in a negative direction in increments of about $1^1/_2$ minutes for each position. At +60 minutes, the error shall be 30 ± 2 minutes more negative than error recorded in *aq* above.

as. With Δ270 MINUTES switch at 0, set Δ270 polarity switch to –Δ270. Readout error shall be 30 ± 2 minutes more positive than error recorded in *aq* above.

at. Rotate Δ270 MINUTES switch to 0.

11-19. Manual and Electrical Monitor Assembly Swing Test

NOTE

This test must be completed within 30 minutes to minimize errors due to shifting of earth's magnetic field.

a. Set E1 NORM-E1 REV switch to OFF.

b. Set E2 NORM-E2 REV switch to OFF.

c. Set HDG SELECTOR control to 0 DEGREES.

d. Rotate turntable from 0-degree through 345-degree headings in 15-degree increments. Record ERROR readout indication at each setting as manual swing error.

e. Add the manual swing errors recorded at 0-, 90-, 180-, and 270-degree headings algebraically and divide the sum by 4. Record the result as manual swing index error.

f. Subtract the manual swing index error algebraically from each manual swing error. Record the resulting values as corrected manual swing errors.

g. Set MISAL polarity switch and MINUTES control to value nearest that of manual swing index error.

k Set AREA COMP vernier control to value established during area magnetic survey.

i. Set E1 CHECK, E2 CHECK, Δ180, and Δ270 controls to values marked on magnetic azimuth reference detector.

j. Set E1 NORM-E1 REV switch to E1 NORM.

k. Set E2 NORM-E2 REV switch to E2 NORM.

l. Set READOUT SELECT control to 90.

m. Set MODE SELECTOR control to MON.

n. Set E1 CHECK-E2 CHECK switch to E1 CHECK.

o. Adjust E1 VOLTS control until NULL INDICATOR indicates a null. Lock E1 VOLTS control.

p. Set E1 CHECK-E2 CHECK switch to E2 CHECK.

q. Adjust E2 VOLTS control until NULL INDICATOR indicates a null. Lock E2 VOLTS control.

r. Set E1 CHECK-E2 CHECK switch to OFF,

s. Set MODE SELECTOR control to CAL.

t. Set READOUT SELECT control to F.V.

u. Rotate turntable to 0-degree heading.

v. Set HDG SELECTOR control to each position from 0 through 345 DEGREES. Record ERROR readout indication at each setting as electrical swing error.

w. Algebraically subtract the electrical swing errors of *v*, above, from the corrected manual swing errors of *f* above, at each heading. The difference shall not exceed 10 minutes at any of the 24 headings.

11-20. Test Facilities Required for Depot Testing of the MK-1040A/ASN

The following items are required:

Item		*Technical manual*	*Common name*
Multimeter	ME-26B/U	TM 11-6625-200-12	Multimeter
Ohmmeter	ZM-21/U	TM 11-2050A	Ohmmeter

11-21. Electrical Special Purpose Cable Assembly CX-10934/ASN Test

a. Measure resistance between connector pins and alligator clips using multimeter. Continuity shall exist between the following pins and clips:

P1-A and WHT
P1-B and BLU
P1-C and YEL
P1-D and RED
P1-E and BLK
P1-F and GRN

b. Measure insulation resistance between connector pins and between each connector pin and connector shell P1 using ohmmeter. With 250 volts dc applied, insulation resistance shall be 20 megohms or more.

11-22. Branched Electrical Special Purpose Cable Assembly CX-10935/ASN Test

a. Measure resistance between connector pins using multimeter. Continuity shall exist between the following pins:

P1-1 and J1-1
P1-1 and J1-1
P1-2 and J1-2
P1-3 and J1-3
P1-4 and J1-4
P1-5 and J1-5
P1-6 and J1-6
P1-7 and J1-7
P1-8 and J1-8
P1-9 and J1-9
P1-10 and J1-10
P1-11 and J1-11
P1-12 and J1-12
P1-13 and P3-A
P1-14 and P3-B
P1-15 and P3-C
P1-16 and P8-D
P1-17 and P3-E
P1-28 and J1-28
P1-35 and J1-35
P1-42 and P2-H
P1-43 and P2-J
P1-44 and P2-G
P1-45 and J1-45
P1-46 and J1-46
P1-48 and J1-48
P1-49 and J1-49
P1-50 and J1-50
P1-51 and J1-51
P1-54 and J1-54
P1-55 and J1-55
J1-42 and P2-B
J1-43 and P2-C
J1-44 and P2-A
J1-11 and P2-F

b. Measure insulation resistance between connector pins and between each connector pin and connector shells J1, P1, P2, and P3 using ohmmeter. With 250 volts dc applied, insulation resistance shall be 20 megohms or more.

11-23. Electrical Special Purpose Cable Assembly CX-10936/ASN Test

a. Measure resistance between connector pins using multimeter, Continuity shall exist between the following pins:

J1-A and P1-A
J1-B and P1-B
J1-C and P1-C
J1-D and P1-D
J1-E and P1-E
J1-F and P1-F

b. Measure insulation resistance between connector pins and between each connector pin and connector shell J1 using ohmmeter. With 250 volts dc applied, insulation resistance shall be 20 megohmsor more.

11-24. Branched Electrical Special Purpose Cable Assembly CX-10937/ASN Test

a. Measure resistance between connector pins using multimeter. Continuity shall exist between the following pins:

J1-F and P1-F
J1-E and P1-E
J1-D and P1-D
J1-F and P2-F
J1-E and P2-K
J1-D and P2-L
J1-A and P2-G
J1-B and P2-H

J1-C and P2-J
P1-A and P2-A
P1-B and P2-B
P1-C and P2-C

b. Measure insulation resistance between connector pins and between each connector pin and connector shells P1 and P2 using ohmmeter. With 250 volts dc applied, insulation resistance shall be 20 megohms or more.

11-25. Electrical Special Purpose Cable Assembly CX-10938/ASN Test

a. Measure resistance between connector pins using multimeter. Continuity shall exist between the following pins:

J1-A and P1-A
J1-B and P1-B
J1-C and P1-C
J1-D and P1-D
J1-E and P1-E
J1-F and P1-F

b. Measure insulation resistance between connector pins and between each connector pin and connector shells J1 and P1 using ohmmeter. With 250 volts dc applied, insulation resistance shall be 20 megohms or more.

11-26. Electrical Special Purpose Cable Assembly CX-10939/ASN Test

a. Measure resistance between connector pins using multimeter. Continuity shall exist between the following pins:

J1-S and J2-A
J1-T and J2-B
J1-P and J2-C
J1-V and J2-D
J1-W and J2-E
J1-C and J2-F

b. Measure insulation resistance between connector pins and between each connector pin and connector shells J1 and J2 using ohmmeter. With 250 volts dc applied, insulation resistance shall be 20 megohms or more.

11-27. Branched Electrical Special Purpose Cable Assembly CX-10940/ASN Test

a. Measure resistance between connector pins using multimeter. Continuity shall exist between the following pins:

J1-A and P1-A
J1-B and P1-B
J1-C and P1-C
J1-D and P1-D
J1-E and P1-E
J1-F and P1-F
J1-G and P1-G
J1-H and P1-H
J1-J and P1-J
J1-K and P1-K
J1-L and P1-L
J1-M and P1-M
J1-N and P1-N
J1-P and P1-P
J1-R and P1-R
J1-V and P1-V
J1-W and P1-W
J1-X and P1-X
J1-Y and P1-Y
J1-Z and P1-Z
J1-a and P1-a
J1-b and P1-b
J1-c and P1-c
J1-C and P2-F
J1-S and P2-A
J1-T and P2-B
J1-U and P2-C
J1-V and P2-L
J1-W and P2-K
P1-S and P2-G
P1-T and P2-H
P1-U and P2-J

b. Measure insulation resistance between connector pins and between each connector pin and connector shells J1, P1, and P2 using ohmmeter. With 250 volts dc applied, insulation resistance shall be 20 megohms or more.

11-28. Branched Electrical Special Purpose Cable Assembly CX-10941/ASN Test

a. Measure resistance between connector pins using multimeter. Continuity shall exist between the following pins:

P1-A and J1-A
P1-B and J1-B
P1-C and J1-C

P1-D and J1-D
P1-E and J1-E
P1-F and P2-D
P1-G and J1-G
P1-H and P2-E
P1-J and P2-A
P1-K and P2-B
P1-L and P2-C
P1-M and J1-M
P1-N and J1-N
P1-P and J1-P
P1-R and J1-R
P1-S and J1-S
P1-T and J1-T
P1-U and J1-U
P1-V and J1-V
P1-W and J1-W
P1-X and J1-X
P1-Y and J1-Y
P1-Z and J1-Z
P1-a and J1-a
P1-b and J1-b
P1-c and J1-c

b. Measure insulation resistance between connector pins and between each connector pin and connector shells J1, P1, and P2 using ohmmeter. With 250 volts dc applied, insulation resistance shall be 20 megohms or more.

APPENDIX A

BASIC ISSUE ITEMS

Section I. INTRODUCTION

A-1. Scope

This appendix lists items comprising an operable equipment and those required for installation, operation, or operator's maintenance for Magnetic Compass, Calibrator Set AN/ASM-339(V)1.

A-2. Explanation of Columns

The following is a list of explanations of columns in section II.

a. Source, Maintenance, and Recoverability Codes (SMR) Column.

(1) Source *code (S).* The selection status and source for the listed item is the first code indicated in this column. The source codes and their explanations are:

Code	Explanation
P-	Applies to repair parts that are stocked in or supplied from GSA/DSA, or Army supply system, and authorized for use at indicated maintenance categories.
AH-	Applies to repair parts requiring test at a category higher than that authorized to replace the part.

(2) *Maintenance code (M).* The lowest category of maintenance authorized to install the item is indicated by the second code in the column. The maintenance category code and its explanation is:

Code	Explanation
0	Organizational Maintenance

(3) *Recoverability code (A!).* The recoverability code is the third code in this column. It indicates whether unserviceable items should be returned for recovery or salvage. Recoverability code and its explanation is as follows:

Note: When no code is indicated in the recoverability column, the part will be considered expendable.

Code	Explanation
R—	Applies to repair parts and assemblies that are economically repairable at DSU and GSU activities and are normally furnished by supply on an exchange basis.

b. Federal Stock Number Column. This column indicates the Federal stock number for the item.

c. Description Column. This column includes the Federal item name and any additional description of the item which may be required. A part number or other reference number is followed by the applicable five-digit Federal Supply Code for Manufacturers.

Note. Usable on code column is not used.

d. Unit of Issue Column The unit used as a basis of issue (e.g., ea, pr, ft, yd, etc.) is given in this column.

e. Quantity Incorporated in Unit Pack Column. Not used.

f. Quantity Incorporated in Unit Column. The total quantity of the item used in the equipment is given in this column.

g. Quantity Furnished with Equipment Column. This column lists the quantity of the item supplied for initial operation of the equipment and/or the quantities authorized to be kept on hand by the operator for maintenance of the equipment.

h. Quantity Authorized Column. Not used.

i. Illustration Column.

(1) *Figure number (a).* The number of

the illustration on which the item is shown is indicated in this column.

(2) *Item No. or reference designation (b).* The reference designation and/or item number callout used to reference the item on the illustration appears in this column.

A-3. Federal Supply Codes

This paragraph lists the Federal supply code with the associated manufacturer's name.

Code	*Manufacutrer's Name*
07187	Sperry Phoenix Co. Div. of Sperry Rand Corp.
98376	Zero Mfg. Co.

SECTION II. BASIC ISSUE ITEMS

(1) SMR CODE	(2) FEDERAL STOCK NUMBER	(3) DESCRIPTION — Reference Number & Mfr Code / USABLE ON CODE	(4) QTY FOR ISSUE	(5) QTY INCL IN UNIT PACK	(6) QTY INCL IN UNIT	(7) QTY ORDERED WITH EQUIP	(8) QTY AUTH	(a) LOC. CODE	(9) (b) ILLUSTRATIONS ITEM NO. OR REFERENCE DESIGNATION
-O-I	605- 782-0281	AGNETIC COMPASS CALIBRATOR SET AN/ASM-339(V)1: 2592080-8; 07187 This item is nonexpendable.)							
		ECHNICAL MANUAL TM 11-4920-292-15	a			1			
		Requisition through pinpoint account number if assigned; therwise through nearest Adjutant General facility.							
		NOTE: For technical manuals the quantity indicates the maximum umber of copies authorized for packing (or issue) with the quipment. Where a number of these equipments are concentrated n a small area, the quantity on hand may be reduced to the minimum ctual requirements as determined by the Commanding Officer of the nit.							
O-R	605-782-0282	DAPTER BOX, COMPASS: 2587103; 07187	a		1	1			
-O-		DAPTER KIT, MAGNETIC COMPASS CALIBRATOR SET: 2592511; 07187	a		1	1			
O-R		ABLE ASSEMBLY, MONITOR (W3): 2580315; 07187	a		1	1			
O-R	605-782-0291	ABLE ASSEMBLY, SPECIAL PURPOSE (W1): 2589076; 07187	a		1	1			
O-R	605-782-0288	ABLE ASSEMBLY, TRANSMITTER (W2): 2580314; 07187	a		1	1			
-O-	605-782-0300	ASE SHIPPING : R2456 ; 98376	a		1	1			
O -R	605-782-0231	ONSOLE CONTROL: 2591798; 07187	a		1	1			
O	340-880-7987	RANK ASSEMBLY, HAND : 2580284 ; 07187	a		1	1			
O-R	920-089-0186	IELD TESTER, MAGNETIC COMPASS CALIBRATOR: 2587311 ; 7187	a		1	1			A
O-R	605-782-0276	ONITOR, MAGNETIC FIELD : 2591799; 07187	a		1	1			
O-R	605-782-0226	OWER SUPPLY: 2588320; 07187	a		1	1			B
-O-	130-935-7132	EEL, RACK ASSEMBLY: 2587139-1; 07187	a		1	1			
-O-	130-935-7133	EEL, RACK ASSEMBLY : 2587139-2; 07187	a		1	1			
-O-	130-935-7134	EEL, RACK ASSEMBLY : 2587139-3; 07187	a		1	1			
O-R	605-782-0256	OOL KIT, ALIGNMENT EQUIPMENT : 2588225 ; 07187	a		1	1			A
-O-	605-782-0229	RIPOD ASSEMBLY, SURVEYING: 2587149-1; 07187	a		2	2			
-O-R	605-782-0234	URNTABLE, REMOTE TRANSMITTER : 2588223; 07187	a		1	1			A
		NO ACCESSORIES, TOOLS OR TEST EQUIPMENT ARE TO BE ISSUED WITH THIS EQUIPMENT							
		THE FOLLOWING ITEMS AND THEIR QUANTITIES ARE MOUNTED IN OR ON EQUIPMENT LISTED FOR STORAGE PURPOSES							
		CONSOLE, CONTROL							
	5920-879-3577	FUSE, CARTRIDGE : 5	a						
	5240-223 -9100	LAMP GLOW : 2	a						

AMSEL - MRFORM 6010 (Previous edition is obsolete) 1 Jun 67 AN/ASM-339(V)1 ESC-FM 2258-67

APPENDIX B

MAINTENANCE ALLOCATION

Section I. INTRODUCTION

B-1. General

This appendix provides a summary of the maintenance operations covered in the equipment literature for Magnetic Compass Calibrator Set AN/ASM-339 (V) 1. It authorized categories of maintenance for specific maintenance functions on repairable items and components and the tools and equipment required to perform each function. This appendix may be used as an aid in planning maintenance operations.

B-2. Explanation of Format for Maintenance Allocation Chart

a. Group Number. Group numbers correspond to the reference designation prefix assigned in accordance with ASA Y32.16, Electrical and Electronics Reference Designations. They indicate the relation of listed items to the next higher assembly.

b. Component Assembly Nomenclature. This column lists the item names of component units, assemblies, subassemblies, and modules on which maintenance is authorized.

c. Maintenance Function. This column indicates the maintenance category at which performance of the specific maintenance function is authorized. Authorization to perform a function at any category also includes authorization to perform that function at higher categories. The codes used represent the various maintenance categories as follows:

Code	*Maintenance Category*
C	Operator/Crew
O	Organizational Maintenance
F	Direct Support Maintenance
H	General Support Maintenance
D	Depot Maintenance

d. Tools and Equipment. The numbers appearing in this column refer to specific tools and equipment which are identified by these numbers in section III.

e. Remarks. Self explanatory.

B-3. Explanation of Format for Tool and Test Equipment Requirements

The columns in the tool and test equipment requirements chart are as follows:

a. Tools and Equipment. The numbers in this column coincide with the numbers used in the tools and equipment column of the MAC. The numbers indicate the applicable tools for the maintenance function.

b. Maintenance Category. The codes in this column indicate the maintenance category normally allocated the facility.

c. Nomenclature. This column lists tools, test, and maintenance equipment required to perform the maintenance functions.

d. Federal Stock Number. This column lists the Federal stock number.

e. Tool Number. Not used.

SECTION II. MAINTENANCE ALLOCATION CHART

MAINTENANCE ALLOCATION CHART

GROUP NUMBER	COMPONENT ASSEMBLY NOMENCLATURE	MAINTENANCE FUNCTIONS											TOOLS AND EQUIPMENT	REMARKS
		INSPECT	TEST	SERVICE	ADJUST	ALIGN	CALIBRATE	INSTALL	REPLACE	REPAIR	OVERHAUL	REBUILD		
A	MAGNETIC COMPASS CALIBRATOR SET AN/ASM-339(V)1	O												Visual inspection
			O											Operation
				O									5	Clean and lubricate periodically
									O				5	Black box
												D	8	
1A	CRANK HANDLE MX-8108/U	O												Visual inspection
									O				5	Replace handle
2A	INTERCONNECTING BOX J-2812/ASM-339(V)	O												Visual inspection
									O				5	Black box
			H										1,7	Operation
										H			6	Piece part
3A	REEL CABLE RL-255/U	O												Visual inspection
									O				5	Replace reel
										H			6	Piece parts
3A1	CABLE ASSY, SPECIAL PURPOSE ELECTRICAL (W2) CX-10867/U (50 ft)	O												Visual inspection
			O										1	Continuity check
									O					Replace cable
			H										1	Continuity
										H			6	Piece parts
4A	REEL, CABLE RL-256/U	O												Visual inspection
									O				5	Replace reel
										H			6	Piece parts
4A1	CABLE ASSY, SPECIAL PURPOSE, ELECTRICAL (W1) CX-10868/U (100 ft)	O												Visual inspection
			O										1	Continuity check
									O					Replace cable
			H										1	Continuity
										H			6	Piece parts
5A	REEL CABLE RL-257/U	O												Visual inspection
									O				5	Replace reel
										H			6	Piece parts

MAINTENANCE ALLOCATION CHART

GROUP NUMBER	COMPONENT ASSEMBLY NOMENCLATURE	MAINTENANCE FUNCTIONS											TOOLS AND EQUIPMENT	REMARKS
		INSPECT	TEST	SERVICE	ADJUST	ALIGN	CALIBRATE	INSTALL	REPLACE	REPAIR	OVERHAUL	REBUILD		
	AN/ASM-339(V)1 (continued)													
5A1	CABLE, ASSY, SPECIAL PURPOSE, ELECTRICAL (W3) CX-10867/U (200 ft)	O												Visual inspection
			O										1	Continuity check
									O					Replace cable
			H										1	Continuity
										H			6	Piece parts
6A	TRIPOD ELECTRONIC EQUIPMENT MX-8114/U	O												Visual inspection
									O					Replace tripod
										H			6	Piece parts
7A	FIELD TESTER, MAGNETIC COMPASS CALIBRATOR AN/ASM-344	O												Visual inspection
									O				5	Knobs, black box
			H										1	Continuity, resistance checks
7A1	CABLE ASSY, SPECIAL PURPOSE ELECTRICAL BRANCHED (W4) CX-10869/ASM-344	O												Visual inspection
										H			6	Piece parts
			O										1	Continuity checks
									O					Replace cable
			H										1	Continuity
										H			6	Piece parts
7A2	DETECTOR ASSY, MAGNETIC AZIMUTH DT-354/ASM-344	O												Visual inspection
			O										1	Continuity
									O				5	Black box
			H										1	Operation
										H			6	Piece parts
8A	CONTROL, MAGNETIC COMPASS CALIBRATOR SET C-7694/ASM-339(V)	O												Visual inspection
			O											operation
									O					Knobs, fuses, lamps, black box
			H										1,2,3,6,7,8	Operation
						H							1,2,3,8	Transformer
										H			6	Piece parts
											H	D	1,2,3,4,6,7,8	

AMSEL-MR Form 1 Jan 66 6031 (Supersedes edition of 1 Feb 65, which is obsolete) AN/ASM-339(V)1 ESC-FM 97-66

MAINTENANCE ALLOCATION CHART

GROUP NUMBER	COMPONENT ASSEMBLY NOMENCLATURE	MAINTENANCE FUNCTIONS											TOOLS AND EQUIPMENT	REMARKS
		INSPECT	TEST	SERVICE	ADJUST	ALIGN	CALIBRATE	INSTALL	REPLACE	REPAIR	OVERHAUL	REBUILD		
	AN/ASM-339(V)1 (continued)													
9A	TURNTABLE GROUP, REMOTE TRANSMITTER OQ-30/ASM-339(V)	O												Visual inspection
			O											Check operation
									O					Knobs, black box
			H										1	Check operation
										H			6	Piece parts
											H	D	1,6	Piece parts
9A1	MOUNTING PLATE, TRANSMITTER MX-8112/ASM-339(V)	O												Visual inspection
									O				5	knobs, black box
			H											Test operation
										H			6	Piece parts
												D		
9A2	TURNTABLE ASSY, REMOTE TRANSMITTER MX-8111/ASM-339(V)	O												Visual inspection
									O				5	Knobs, black box
			H										1	Test operation
										H			6	Piece parts
												D		
10A	MONITOR, MAGNETIC FIELD OQ-31/ASM-339(V)	O												Visual inspection
			O										1	Check operation
									O				5	Knob, black box
			H										1	Test operation
										H			6	Piece parts
												D		
10A1	COVER, PROTECTIVE INSTRUMENT CW-999/ASM-339(V)	O												Visual inspection
									O					Replace cover
10A2	MONITOR ASSEMBLY MX-8113/ASM-339(V)	O												Visual inspection
			O										1	Check operation
									O				5	Knobs, black box
			H										1	Test operation
										H			6	Piece parts
												D		

MAINTENANCE ALLOCATION CHART

GROUP NUMBER	COMPONENT ASSEMBLY NOMENCLATURE	MAINTENANCE FUNCTIONS											TOOLS AND EQUIPMENT	REMARKS
		INSPECT	TEST	SERVICE	ADJUST	ALIGN	CALIBRATE	INSTALL	REPLACE	REPAIR	OVERHAUL	REBUILD		
	AN/ASM-339(V)1 (continued)													
11A	ALIGNMENT KIT, ELECTRONIC EQUIPMENT MK-1106/ASM-339(V)	O												Visual inspection
			O										1	Continuity cable assys
									O					Individual tool and assys
			H										1	Continuity cable assys
										H			6	Cable assys, piece parts
11A1	TELESCOPE, AZIMUTH SU-45/ASM-339(V)	O												Visual inspection
									O				5	Knob
										H			6	Replace telescope
11A2	PLATE ASSEMBLY, SUPPORT MT-3986/ASM-339(V)	O												Visual inspection
									O					Replace plate
										H			6	Piece parts
11A3	PLATE ASSEMBLY, SUPPORT MT-3987/ASM-339(V)	O												Visual inspection
									O					Replace plate
										H			6	Piece parts
12A	POWER SUPPLY PP-6056/ASM-339(V)	O												Visual inspection
			O											Check operation
									O				5	Knobs, bulbs, fuses, black box
			H										1,2,3,4,7	Test operation
							H						1,2,3,4	Voltage
										H			6	Piece parts
											H	D	1,2,3,4,6,7	

SECTION III. TOOL AND TEST EQUIPMENT REQUIREMENTS

TOOL AND TEST EQUIPMENT REQUIREMENTS

TOOLS AND EQUIPMENT	MAINTENANCE CATEGORY	NOMENCLATURE	FEDERAL STOCK NUMBER	TOOL NUMBER
		AN/ASM-339(V)1 (continued)		
1	O,H,D	MULTIMETER AN/USM-223	6625-999-7465	
2	H,D	MULTIMETER ME-26A/U	6625-646-9409	
3	H,D	VOLTMETER, ELECTRONIC ME-30E/U	6624-643-1670	
4	H,D	TEST SET, ELECTRICAL POWER AN/UPM-93A	6625-581-2097	
5	O	TOOL KIT TK-101/G	5180-064-5178	
6	H,D	TOOL KIT TK-105/G	5180-610-8177	
7	H,D	TEST SET, SEMICONDUCTOR DEVICE TS-1836/U	6625-893-2628	
8	H,D	SIMULATOR, GYRO AND COMPASS SIGNAL SM-486/ASN	6615-851-8753	

APPENDIX C

ORGANIZATIONAL, DS, GS, AND DEPOT MAINTENANCE REPAIR PARTS AND DEPOT MAINTENANCE REPAIR PARTS AND SPECIAL TOOLS LIST

Section I. INTRODUCTION

C-1. Scope

This appendix lists repair parts and special tools required for the performance of organizational, direct support, general support, and depot maintenance of the AN/ASM-339 (V)1 (secs. II through VIII) and the MX-1040A/ASM (sees. IX through XV). Appendix C is current as of 26 *June 1970.*

C-2. General

This repair parts and special tools list is divided into the following sections:

a. Prescribed Load Allowance (PLA)-Sections II and IX. A composite listings of repair parts, special tools, test and support equipment having quantitative allowances for initial stockage at the organizational level.

b. Repair Parts for Organizational Maintenance-Sections III and X. A list of repair parts authorized for the performance of maintenance at the organizational level.

c. Special Tools, Test and Support Equipment for Organizational Maintenance-Sections IV and XI. Not applicable.

d. Repair Parts for Direct Support, General Support, and Depot Maintenance-Sections V and XII. A list of repair parts authorized for the performance of maintenance at the direct support, general support, and depot level,

e. Special Tools, Test and Support Equipment for Direct Support, General Support, and Depot Maintenance-Sections VI and XIII. A list of special tools, test and support equipment authorized for the performance of maintenance at the direct support, general support, and depot level.

NOTE

There are no special tools, test or support equipment for section XIII.

f. Index-Federal Stock Number Cross-Reference to Figure and Item Number or Reference Designation-Sections VII and XIV. A list of Federal stock numbers in ascending numerical sequence, followed by a list of reference numbers appearing in ascending alphanumeric sequence, cross referenced to the figure number, reference designation, and item number. The item number will appear directly above the reference designation (shown in parentheses).

g. Index-Reference Designation Cross-Reference to Page Number-Sections VIII and XV. A list of reference designations cross-referenced to page numbers.

C-3. Explanation of Columns

The following provides an explanation of columns in the tabular lists:

a. Source, Maintenance, and Recoverability Codes (SMR).

(1) Source codes indicate the selection status and source for the listed item. Source codes are-

Code	*Explanation*
P-	Repair parts which are stocked in or supplied from the GSA/DSA, or Army supply system, and authorized for use at indicated maintenance categories.
P2-	Repair parts which are procured and stocked for insurance purposes because the combat or military essentiality of the end item dictates that a minimum quantity be available in the supply system.
P9-	Assigned to items which are NSA design controlled: unique repair parts, special tools, test, measuring, and diagnostic equipment, which are stocked and supplied by the Army COMSEC logistic system, and which are not subject to the provisions of AR 380-41.
P10-	Assigned to items which are NSA design controlled: special tools, test, measur-

Code *Explanation*

ing, and diagnostic equipment for COMSEC support, which are accountable under the provisions of AR 380-41, and which are stocked and supplied by the Army COMSEC logistic system.

M-Repair parts which are not procured or stocked, but are to be manufactured in indicated maintenance levels. Assemblies which are not procured or stocked as such, but are made up of two or more units. Such component units carry individual stock numbers and descriptions, are procured and stocked separately, and can be assembled to form the required assembly at indicated maintenance categories.

X-Parts and assemblies which are not procured or stocked and the mortality of which normally is below that of the applicable end item or component. The failure of such part or assembly should result in retirement of the end item from the supply system.

X1-Repair parts which are not procured or stocked. The requirement for such items will be filled by use of the next higher assembly or component.

X2-Repair parts which are not socked. The indicated maintenance category requiring such repair parts will attempt to obtain same through cannibalization. Where such repair parts are not obtainable through cannibalization, requirements will be requisitioned, with accompanying justification, through normal supply channels.

G-Major assemblies that are procured with PEMA funds for initial issue only as exchange assemblies at DSU and GSU level. These assemblies will not be stocked above DS and GS level or returned to depot supply level.

(2) Maintenance codes indicate the lowest category of maintenance authorized to install the listed item. The maintenance level codes are-

Code *Explanation*

C ---- Operator/crew
O ---- Organizational maintenance
F ---- Direct support maintenance
H---- General support maintenance
D ---- Depot maintenance

(3) Recoverability codes indicate whether unserviceable items should be returned for recovery or salvage. Items not coded are expendable. Recoverability codes are-

Code *Explanation*

R-Repair parts and assemblies that are economically repairable at DSU and GSU activities and are normally furnished by supply on an exchange basis.

S-Repair parts and assemblies which are economically repairable at DSU and GS activities and which normally are furnished by supply on an exchange basis. When items are determined by GSU to be uneconomically repairable, they will be evacuated to a depot for evaluation and analysis before final disposition.

T-High-dollar value recoverable repair parts which are subject to special handling and are issued on an exchange basis. Such repair parts normally are repaired or overhauled at depot maintenance activities.

U-Repair parts specifically selected for salvage by reclamation units because of precious metal content, critical materials, or high-dollar value reusable casings or castings.

b. Federal Stock Number. Indicates the Federal stock number assigned to the item and will be used for requisitioning purposes.

c. Description. Indicates the Federal item name and any additional description of the item required. The index number has been included as part of the description to aid in the location of "same as" items. A part number or other reference number is followed by the applicable five-digit Federal supply code for manufacturers in parentheses.

d. Unit of Measure (U/M). A two character alphabetic abbreviation indicating the amount or quantity of the item upon which the allowances are based, e.g., ft, ea, pr, etc.

e. Quantity Incorporated in Unit. Indicates the quantity of the item used in the AN/ASM-339 (V) 1 and the MX-1040A/ASN. Subsequent appearances of the same item in the same assembly are indicated by the letters "REF."

f. 15-Day Organizational Maintenance Allowances.

(1) The allowance columns are divided into four subcolumns. Indicated in each subcolumn opposite the first appearance of each item is the total quantity of items authorized for the number of equipments supported. Subsequent appearances of the same item will have the letters "REF" in

the allowance columns. Items authorized for use as required, but not for initial stockage, are identified with an asterisk in the allowance column.

(2) The quantitative allowances for organizational level of maintenance represents one inial prescribed load for a 15-day period for the umber of equipments supported. Units and organizations authorized additional prescribed loads will multiply the number of prescribed loads authorized by the quantity of repair parts reflected in the density column applicable to the number of items supported to obtain the total quantity of repair parts authorized.

(3) Organizational units providing maintenance for more than 100 of these equipments shall determine the total quantity of parts required by converting the equipment quantity to a decimal factor by placing a decimal point before the next to last digit of the number to indicate hundredths, and multiplying the decimal factor by the parts quantity authorized in the 51-100 allowance column. *Example,* authorized allowance for 51-100 equipments is 40; for 150 equipments multiply 40 by 1.50 or 60 parts required.

(4) Subsequent changes to allowances will be limited as follows: No change in the range of items is authorized. If additional items are considered necessary, recommendation should be forwarded to Commanding General, U.S. Army Electronics Command, ATTN: AMSEL-ME-NMP-EM, Fort Monmouth, N.J. 07703 for exception or revision to the allowance list. Revisions to the range of items authorized will be made by the USAECOM National Maintenance Point based upon engineering experience, demand rate, or TAERS information.

g. 30-Day DS/GS Maintenance Allowances.

NOTE

Allowances in GS column are for GS maintenance only.

(1) The allowance columns are divided into three subcolumns. Indicated in each subcolumn, opposite the first appearance of each item, is the total quantity of items authorized for the number of equipments supported. Subsequent appearances of the same item will have the letters "REF" in the applicable allowance columns. Items authorized for use as required, but not for initial stockage, are identified with an asterisk in the allowance column.

(2) The quantitative allowances for DS/GS levels of maintenance will represent initial stockage for a 30-day period for the number of equipments supported.

(3) Determination of the total quantity of parts required for maintenance of more than 100 of these equipments can be accomplished by converting the equipment quantity to a decimal factor by placing a decimal point before the next to last digit of the number to indicate hundredths, and multiplying the decimal factor by the parts quantity authorized in the 51-100 allowance column. *Example,* authorized allowance for 51-100 equipments is 40; for 150 equipments multiply 40 by 1.50 or 60 parts required.

h. One-Year Allowance per 100 Equipments/ Contingency Planning Purposes. Indicates opposite the first appearance of each item the total quantity required for distribution and contingency planning purposes. The range of items indicates total quantities of all authorized items required to provide for adequate support of 100 equipments for 1 year.

i. Depot Maintenance Allowance per 100 Equipments, Indicates opposite the first appearance of each item the total quantity authorized for depot maintenance of 100 equipments. Subsequent appearances of the same item wil have the letters "REF" in the allowance column. Items authorized for use as required, but not for initial stockage, are identified with an asterisk in the allowance column.

j. Illustrations.

(1) *Figure number.* Indicates the figure number in which the item is shown.

(2) *Item number or reference designation.* Indicates the item number or reference designation used to identify the item in the illustration. The item number will appear directly above the reference designation (shown in parentheses).

C-4. Special Information

a. Repair parts mortality is computed from failure rates derived from experience factors with the individual parts in a variety of equipments. Variations in the specific application and periods of use of electronics equipment, the fragility of electronic piece parts, plus intangible material and quality factors intrinsic to the manufacture of electronic parts, do not permit mortality to be based on hours of end item use. However, long periods of continuous use under adverse conditions are likely to increase repair parts mortality.

b. Parts which require manufacture or assem-

bly at a category higher than that authorized for installation will indicate in the source column the higher category; i.e. PH, AH, etc.

C-5. Location of Repair Parts

a. This appendix contains four cross-reference indexes (secs. VII, VIII, XIV, and XV) to be used to locate a repair part when either the Federal stock number, reference number (manufacturer's part number), item number, or reference designation is known. The first column in each index is prepared in numerical or alphanumerical sequence in ascending order. Where a Federal stock number is not listed, refer to the reference number (manufacturer's part number) immediately following the Federal stock number column.

b. When the Federal stock number is known, follow the procedures given in (1) and (2) below.

(1) Refer to the index of Federal stock numbers (secs. VII or XIV) and locate the Federal stock number. The FSN is cross-referenced to the applicable figure and reference designation.

(2) When the reference designation is determined, refer to the reference designation index (sec. VIII or XV). The reference designations are listed in numerical ascending order and are cross-referenced to the page number on which they appear in the repair parts lists (secs. III and V, or X and XII). Refer to the page number noted in the index and locate the reference designation in the repair parts list (col. 7b or col. 10b). If the description column indicates that it is a "same as" item, locate the first appearance of the item by the index number referenced.

c. When the reference designation is known, follow the procedures given in b(2) above.

d. When neither the FSN nor reference designation is known, identify the part in the illustration and follow directions given in c above, or scrutinize column 3 of the repair parts lists (secs. III and V, or X and XII).

C-6. Federal Supply Code for Manufacturers

Code	*Manufacturer*
02660	Amphenol Corp.
03296	Nylon Molding Corp.
03508	General Electric Co., Semiconductor Products Dept.
03877	Transitron Electric Corp.
04239	General Electric Co., Metallurgical Products Dept.
04713	Motorola Semiconductor Products, Inc.
05397	Union Carbide Corp., Electronics Division
06001	General Electric Co., Electronic Capacitor and Battery Dept.
06540	Amatom Electronic Hardware Co., Inc,
06751	Semcor Division Components Corp.
06995	Berger, C. L., and Sons
07088	Kelvin Electric Co.
07187	Sperry Flight Systems Division of Sperry Rand Corp.
07239	James G. Biddle Co.
08187	Hargadon, Chas. D., Mfg. Co.
08242	Theta Instrument Corp.
08280	Atocon Co.
08289	The Blinn Delbert Co., Inc.
08718	I T T Cannon Electric, Inc.
08795	Rayclad Tubes, Inc.
09798	Electro Winders Co., Inc.
10066	Richard Mfg. Co.
10109	EMP Electronics, Inc.
12406	Elpac, Inc.
12954	Dickson Electronics Corp.
13209	The Bendix Corp. Semiconductor Div.
13934	Midwec Corp.
18911	Durant Mfg. Co.
21845	Solitron Devices, Inc.
37942	P. R. Mallory and Co., Inc.
38315	Honeywell, Inc., Precision Meter Division
42838	National Rivet and Mfg. Co.
44655	Ohmite Mfg. Co.
46384	Penn. Engineering and Mfg. Corp.
56232	Sperry Gyroscope Division of Sperry Rand Corp.
56289	Sprague Electric Co.
56878	The Standard Pressed Steel Co.
57533	Sterling Precision Corp.
58474	Superior Electric Co.
70276	Allen Mfg. Co.
70318	Allmetal Screw Products Co., Inc.
70854	Barden Corp.
71218	Bud Radio, Inc.
71471	Aerovox Corp. Cinema Plant
71744	Chicago Miniature Lamp Works
76219	Dialight Corp.
72962	Elastic Stop Nut Division of Amerace Esna Corp.
72982	Erie Technological Products, Inc.
73138	Beckman Instruments, Inc.
73439	American Screw Co.
75376	Kurz & Kasch, Inc.
76385	Minor Rubber Co., Inc.
76545	Mueller Electric Co.

Code	Manufacturer
77045	Thomas A. Edison, Instrument Division, McGraw-Edison Co.
77147	Patton-MacGuyer Co. Div. of Avid Corp.
77250	Pheoll Mfg. Co., Division of Allied Products Corp.
77820	The Bendix Corp., Electrical Components Division
79963	Zierick Mfg. Co.
80031	MEPCO Division of Sessions Clock Co.
80223	United Transformer Co.
80294	Bourns, Inc.
81349	Military Specifications
81350	Joint Army-Navy Specifications A. W. Haydon Co.
83003	Varo, Inc.
83086	New Hampshire Ball Bearings, Inc.
83186	Victory Engineering Corp.
83332	Tech Laboratories
86197	Litton Precision Products, Inc.
88044	Aeronautical Standards Group
91506	Augat, Inc.
91663	Armel Electronics, Inc.
91812	Janco Corp.
93389	Proto Tool Co.
95238	Continental Connector Corp.
95987	Weckesser Co., Inc.
96508	Xcelite, Inc.
96733	San Fernando Electric Mfg. Co.
96906	Military Standards
98291	Sealectro Corp.
98298	Century Hydraulics Division of Century & Detroit
98376	Zero Mfg. Co., West Division
98978	International Electronic Research Corp.
99180	Transitron Electronic Corp.
99515	Marshall Industries, Capacitor Division

[Next page is C-4]

SECTION II PRESCRIBED LOAD ALLOWANCE (AN/ASM-339(V)1)

(1) FEDERAL STOCK NUMBER	(2) DESCRIPTION	USABLE ON CODE	(3) 15-DAY ORG MAINT. ALLOWANCE (a) 1-5	(b) 6-20	(c) 21-50	(d) 51-10
920-759-6266	TANGENT SCREW: A9078	(06995)			2	2
305-868-1925	SCREW THUMB: A16067	(06995)			2	2
305-868-1926	KNOB CLAMP: A9091	(06995)				2
355-08 9-2124	KNOB: S649-3LBBALLENSS	(75376)			2	2
355-765-8230	KNOB: S648-3LBBALLENSS	(75376)			2	2
355-814-7236	KNOB: 2503007	(07187)			2	2
355-814-7237	KNOB LEG ADJ: 2503008	(07187)			2	2
920-879-3570	FUSE CARTRIDGE : F02A250V1 1-2AS	(81349)		2	3	5
240-223-9100	LAMP GLOW: NE51	(71744)	2	2	2	4

SECTION III REPAIR PARTS FOR ORGANIZATIONAL MAINTENANCE (AN/ASM-339(V)1)

(1) SMR CODE	2 FEDERAL STOCK NUMBER	(3) DESCRIPTION Reference Number & Mfr Code		USABLE ON CODE	(4) UNIT OF MEAS	5) QTY INC IN UNIT	15-DAY ORGANIZATIONAL MAINTENANCE ALW a) 1-5	(b) 3-2	(c) 1-5	(d) 1-1	7 ILLUSTRATIONS (a) FIG NO.	(b) ITEM NO. OR REFERENCE DESIGNATIO
	6605-782-0281	A001	CALIBRATOR SET, MAGNETIC COMPASS AN/ASM-339(V)1: (This item is nonexpendable)								1	(MC-2)
P-O-R	6605-782-0282	A002	INTERCONNECTING BOX J-2812/ASM-339(V)		EA	1	*	*	*	*	1	6 (2)
PH-OS	6605-782-0256	A023	ALIGNMENT KIT, ELECTRONIC EQUIPMENT MX-1106/ASM-339 (V)1		EA	1	*	*	*	*	1	18
P-O	6605-125-7401	A024	ADAPTER, PLUMB BOB: 2503581 (07187)		EA	1	*	*	*	*	10	50
P-O	5120-106-2462	A086	SCREWDRIVER, FLAT TIP: 9801 (93389)		EA	1	*	*	*	*	10	69
P-O	120-248-117	A087	SCREWDRIVER, FLAT TIP: BR181 (96508)		EA	1	*	*	*	*	10	71
P-O	605-228-843	A088	SHADE, OPTICAL INSTRUMENT: 16283 (06995)		EA	1	*	*	*	*	10	54
P-O-	605-782-029	A099	CABLE ASSY SPECIAL PURPOSE CX-10868/U (100 ft.)		EA	1	*	*	*	*	1	9 (W1)
P-O-R	605-179-170	A105	CABLE ASSY, SPECIAL PURPOSE, ELECT CX-10867/U (200 ft.)		EA	1	*	*	*	*	1	11 (W3)
P-O-R	6605-782-0237	A114	CABLE ASSY, SPECIAL PURPOSE , ELECT CX-10867/U (50 ft.)		EA	1	*	*	*	*	1	7 (W2)
AH-OS		A123	CASE , CALIBRATOR SET CY-6479/ASM-339(V): R2456 (98376)		EA	1					1	20
PH-OS	605-782-023	A125	CONTROL, MAGNETIC COMPASS CALIBRATOR SET C-7694/ASM-339(V)		EA	1	*	*	*	*	1	15
		A126	CASE CONT CSL: ZCC254-254D2454 (98376)		EA	1					7	6
P-O	920-879-357	A127	FUSE CARTRIDGE: F02A250V1 1-2AS (81 349)		EA	5	*	2	3	5	7	5
P-O	6240-223-9100	A128	LAMP GLOW: NE51 (71744)		EA	2	2	2	2	4	7	5A
P-O	5920-879-3570	A303	FUSE CARTRIDGE: SAME AS A127		EA	2	EF	EF	EF	EF	16	21 (1 F1, 1F2)
PH-OS	6605-835-5641	A306	IND HEADING ERROR: 2588156-1 (07187)		EA	1	*	*	*	*	16	35 (1A8)
P-O	5355-089-2124	A376	KNOB: S649-3LBBALLENSS (75376)		EA	4	*	*	2	2	16	18
P-O	5355 -765 -8230	A377	KNOB: S648- 3LBBALLENSS (75376)		EA	8	*	*	2	2	16	3
P-O	6240-223-9100	A378	LAMP GLOW: SAME AS A128		EA	7	EF	EF	EF	EF	16	7 DS1 thru 1DS7)
P-O	5340-880-7987	A468	CRANK ASSY HAND MX-8108/U: 2580284		EA	1	*	*	*	*	1	13
PH-OS	4920-089-0186	A469	FIELD TESTER, MAGNETIC COMPASS CALIBRATOR AN/ASM - 344		EA	1	*	*	*	*	1	19 (5)
P-O-S	6605-782-0227	A470	CABLE ASSY SPECIAL PURPOSE , BRANCHED CX- 10869/ASM- 344		EA	1	*	*	*	*	11	(W4)
P-O	5355-421-1712	A482	KNOB ADJ: 2519208 (07187)		EA	1	*	*	*	*	11	9
P-O	5355-765-8230	A519	KNOB: SAME AS A377		EA	3	EF	EF	EF	EF	14	5

SECTION III REPAIR PARTS FOR ORGANIZATIONAL MAINTENANCE (CONTINUED)

(1) SMR CODE	(2) FEDERAL STOCK NUMBER	(3) DESCRIPTION Reference Number & Mfr Code	USABLE ON CODE	(4) UNIT OF MEAS	(5) QTY INC IN UNIT	(6) 15-DAY ORGANIZATIONAL MAINTENANCE ALW (a) 1-5	(b) 6-20	(c) 21-50	(d) 51-1	(7) ILLUSTRATIONS (a) FIG NO.	(b) ITEM NO. OR REFERENCE DESIGNATION
P-O	5305-868-1926	A585 KNOB CLAMP: A9091 (06995)		EA	1	*	*	*	2	9	15
P-O	4920-759-6266	A586 TANGENT SCREW: A9078 (06995)		EA	1	*	*	2	2	9	12
P-O	4920-957-6903	A587 CAP, OBJECTIVE: 16284 (06995)		EA	1	*	*	*	*	9	11
H-O-S	6605-782-0228	A621 POWER SUPPLY PP-6056/ASM-339(V)		EA	1	*	*	*	*	1	14 (8)
P-O	5340-369-9266	A633 HANDLE BOW: 1751904 (07187)		EA	1	*	*	*	*	6	12
H-O-S		A755 REEL CABLE RL-255/U		EA	1					1	8
H-O-S		A761 REEL RACK ASSY RL-256/U: 2587139-2 (07187)		EA	1					1	10
H-O-S		A767 REEL CABLE RL-257/U: 2587139-3 (07187)		EA	1					1	12
H-O-S		A773 TRIPOD ELECT, EQUIPMENT MX-8114/U: 2587149-1 (07187)		EA	2					1	5
P-O	5355-814-7236	A779 KNOB: 2503007 (07187)		EA	2	*	*	2	2	2	12
P-O	5355-814-7237	A780 KNOB LEG ADJ: 2503008 (07 187)		EA	3	*	*	2	2	2	9
H-O-S	6605-782-0234	A793 TURNTABLE TRANSMITTER QQ-30/ASM-339(V)		EA	1	*	*	*	*	1	16 (4)
P-O	5305-880-7772	A807 KNOB: A29006 (06995)		EA	1	*	*	*	*	8	16
P-O	4920-759-6267	A808 TANGENT, SCREW: A29007 (06995)		EA	1	*	*	*	*	8	15
P-O	4920-759-6266	A809 TANGENT, SCREW: SAME AS A586		EA	1	REF	REF	REF	REF	8	13
P-O	5305-868-1926	A810 KNOB, CLAMP: SAME AS A585		EA	1	REF	REF	REF	REF	8	14
P-O	5305-868-1925	A813 SCREW THUMB: A16067 (06995)		EA	4	*	*	2	2	8	9

SECTION V REPAIR PARTS FOR DIRECT SUPPORT, AND DEPOT MAINTENANCE

(1) SMR CODE	(2) FEDERAL STOCK NUMBER	(3) DESCRIPTION REFERENCE NUMBER & MFR. CODE	USABLE ON CODE	(4) UNIT OF MEAS	(5) QTY INC IN UNIT	(6) 30 Y DS ALLOWA (a) 1-20	(b) 1-50	INT (c) 1-10	(7) 30- GS ALLOWA (a) 1-20	(b) 1-5	INT (c) 1-10	(8) LYE WPE QUI TGC	(9) DEPOT MAINT AWPEI TOO QUIP	(10) ILLUSTRATIONS (a) FIG NO.	(b) ITEM NO. OR REFERENCE DESIGNATION
	305-782-0281	A001 CALIBRATOR SET, MAGNETIC COMPASS AN/ASM-339(V)1: (This item is non-expendable)												1	(MC-2)
P-O-R	305-782-0282	A002 INTERCONNECTING BOX J-281 2/ASM- 339(V)		EA	1	*	*	*	*	*	*	10	3	1	6 (2)
P-H	910-754-9376	A003 CAP FIXED ELECT: 29 F532G4 (06001)		EA	3				*	2	2	33	8	3	10 2C1, 2C2, 2C3)
P-H	910-712-6166	A004 CAP FIXED MICA DIALECTRIC: CM35FC103G03 (81349)		EA	1				*	*	2	13	6	3	11 (2C4)
X1-H		A005 CASE ELEC EQUIP: 2587104 (07187)		EA	1									3	
X1-H		A006 CHASSIS: CB629 (71218)		EA	1									3	23
P-H	940-914-9030	A007 CLIP SPG TENSION: 100-300-7-1 (08280)		EA	3				*	2	2	33	7	3	21
X2-H	910-815-8064	A008 INSERT SCREW: S440-0C (46384)		EA	8									3	22
X1-H		A009 RIVET ROUND HEAD: CRES3-32X1-8 (42838)		EA	10									3	20
P-H	905-435-2601	A010 BASE PLATE , INTER-CONNECTING BOX: 1751835 (07187)		EA	1				*	*	*	10	2	3	3
P-H	905-229-6584	A011 PLATE IDENTIFICATION: 2503555-10 (07187)		EA	1				*	*	*	10	2	3	2
X2-H	305-550-5001	A012 SCR MACH PAN HD: MS35233-12 (96906)		EA	9									3	16
X2-H	305-550-5002	A013 SCR MACH PAN HD: MS35233-13 (96906)		EA	10									3	4, 12
P-H	940-549-8176	A014 TERM STANDOFF: TMT12M (91663)		EA	9				2	2	3	77	2	3	18
P-H	940-6 81-818	A015 TERMINAL LUG: MS35431-2 (96906)		EA	1				*	2	2	19	13	3	15 (2E10)
P-H	950-556-1533	A016 TOROID: MQA17 (80223)		EA	1				*	*	*	5	1	3	14 (2L1)
X2-H	910-058-3599	A017 WASHER LOCK: MS35 335-57 (96906)		EA	2									3	13
X2-H	910-550-3715	A018 WASHER LOCK: MS35333-70 (96906)		EA	17									3	5, 17
M-H		A019 WIRING HARNESS: 2580232 (07187)		EA	1									3	
P-H	935-776-7099	A020 CONN RECP ELEC: MS3114P14-15S (96906)		EA	1				*	*	2	13	14	3	9 (2J3)
P-H	935-812-5001	A021 CONN RECP ELEC: PT07A16-23S (77820)		EA	1				*	*	2	13	14	3	8 (2J2)
P-H	935-904-0042	A022 CONN RECP ELEC: PT07A14-18P (77820)		EA	1				*	2	2	13	28	3	7 (2J1)
P-H-O-R	305-782-0256	A023 ALIGNMENT KIT, ELECTRONIC EQUIPMENT MX-1106/ASM-339 (V)1		EA	1	*	*	*	*	*	*	5	3	1	18

SECTION v REPAIR PARTS FOR DIRECT SUPPORT, GENERAL SUPPORT, AND DEPOT MAINTENANCE (CONTINUED)

(1) SMR CODE	(2) FEDERAL STOCK NUMBER	(3) DESCRIPTION REFERENCE NUMBER & MFR. CODE USABLE ON CODE	(4) UNIT OF MEAS	(5) QTY INC IN UNIT	(6) 30-DAY DS MAINT ALLOWANCE (a) 1-20	(b) 21-50	(c) 51-100	(7) 30-DAY GS MAINT ALLOWANCE (a) 1-20	(b) 21-50	(c) 51-100	(8) 1 YR ALW PER EQUIP CNTGCY	(9) DEPOT MAINT ALW PER 100 EQUIP	(10) ILLUSTRATIONS (a) FIG NO.	(b) ITEM NO. OR REFERENCE DESIGNATION
P-O	6605-125-7401	A024 ADAPTER, PLUMB BOB: 2503581 (07187)	EA	1	*	*	*	*	*	*	10	12	10	50
X1-H		A025 CASE, ALIGNMENT ELECT EQUIP CY-6481/ASM- 339(V): ZCC192288CD2465 (98376)	EA	1									10	73
X1-H		A026 CHART CONTENTS: 2504226 (07187)	EA	1									10	3
P-H	4920 -715 -9807	A027 CONNECTOR, QUICK, REMOVAL: 1780949 (07187)	EA	1				*	*	2	13	3	10	
P-H-S	5940-442-6141	A028 TERMINAL BOARD: 1753599 (07187)	EA	1				*	*	2	13	3	10	
M-H		A029 CABLE ASSY SP: 17 80948 (07187)	EA	1									10	(W105)
P-H	5935-542-9012	A030 CONN PLUG ELEC: MS3106E14S6P (96906)	EA	1				*	2	2	19	28	10	21 (W105P1)
X2-H		A031 SLEEVE MARKER: 737847-101 (56232)	EA	1									10	24 (W105A)
X2-H		A032 SLEEVE MARKER: 737847-102 (56232)	EA	1									10	25 (W105B)
X2-H		A033 SLEEVE MARKER: 737847-103 (56232)	EA	1									10	26 (W105C)
X2-H		A034 SLEEVE MARKER: 737847-104 (56232)	EA	1									10	27 (W105D)
X2-H		A035 SLEEVE MARKER: 737 847-105 (56232)	EA	1									10	28 (W105E)
X2-H		A036 SLEEVE MARKER: 737847-106 (56232)	EA	1									10	29 (W105F)
X2-H		A037 SLEEVE MARKER: 1752176-14 (07187)	EA	1									10	22 (W105G)
P-H	5940-655-3913	A038 TERMINAL LUG: 881632 (07187)	EA	6				2	3	5	95	13	10	23
P-H	5340 -435 -2598	A039 STRAP, RETAINING: 1717150 (07187)	EA	1				*	*	2	13	9	10	19
X2-H		A040 NUT HEX: BRS2-56 (73439)	EA	4									10	13, 18
P-H	5935-246-4519	A041 PLATE MOUNTING. CONNECTOR: 1717149 (07187)	EA	1				*	*	2	13	3	10	30
X2-H		A042 SCREW MACHINE BINDHD: BRS2-56X1-4 (73439)	EA	8									10	8
X2-H	5305-022-731	A043 SCREW FLAT HEAD: BRS2-56X7-16 (73439)	EA	2									10	11
X2-H		A044 SCREW MACHINE BINDHD: SAME AS A042	EA	REF									10	16
P-H	5940 -420 -7819	A045 LINK, TERMINAL CONNECTING: 1700932 (07187)	EA	6				2	2	3	53	14	10	10
P-H	5940-655-3271	A046 TERMINAL BOARD: 871098 (07187)	EA	1				*	*	2	16	14	10	15 (TB1)
X2-H	6605-650-6785	A047 PLATE, STRADDLE: 329048 (07187)	EA	2									10	14

SECTION V REPAIR PARTS FOR DIRECT SUPPORT, GENERAL SUPPORT, AND DEPOT MAINTENANCE

(1) SMR CODE	(2) FEDERAL STOCK NUMBER	(3) DESCRIPTION REFERENCE NUMBER & MFR. CODE	USABLE ON CODE	(4) UNIT OF MEAS	(5) QTY INCL IN UNIT	(6) 30 (a) -20	(6) DS LOW (b) 1-5	(6) INT (c) 1-10	(7) 30- (a) 1-20	(7) GS OWA (b) 1-5	(7) INT (c) -1(	(8) UNIT WEIGHT EQUIV NTGC	(9) EPO AIN WPI OO QUI	(10) ILLUSTRATIONS (a) FIG NO	(b) ITEM NO. OR REFERENCE DESIGNATION
X2-H	5310-022-111	A048 WASHER LOCK: MS35333-103 (96906)		EA	10									10	9, 12, 17
P-H	6605-715-694	A049 COVER, QUICK CONNECTOR: 1777815 (07187)		EA	1				*	*	*	10	2	10	49
X1-H		A050 LEAD ASSY ELEC: 2587160 (07187)		EA	1									10	
X2-H		A051 SLEEVE MARKER: SAME AS A031		EA	1									10	39
X2-H		A052 SLEEVE MARKER: SAME AS A032		EA	1									10	40
X2-H		A053 SLEEVE MARKER: SAME AS A033		EA	1									10	41
X2-H		A054 SLEEVE MARKER: SAME AS A034		EA	1									10	42
X2-H		A055 SLEEVE MARKER: SAME AS A035		EA	1									10	43
X2-H		A056 SLEEVE MARKER: SAME AS A036		EA	1									10	44
P-H	5940-655-391	A057 TERMINAL LUG: SAME AS A038		EA	6				EF	EF	EF	EF	EF	10	38
P-H	5305-801-316	A058 THUMBSCREW: 1700938 (07187)		EA	4				*	2	2	40	48	10	45
X2-H		A059 SCR MACH BINDHD: SAME AS A042		EA	6									10	31
X2-H		A060 SCR MACH FIL HEAD: BRS2-56X1-16 (73439)		EA	6									10	46
X2-H		A061 SCR MACH FIL HEAD: BRS2-56X1-2 (73439)		EA	2									10	33
X2-H	5305-836-102	A062 SCR MACH FIL H: BRS4-40X1-4 (73439)		EA	2									10	6
P-H	6605-786-979	A063 CONTACT, ELECTRICAL: 1700936 (73439)		EA	6				2	2	3	53	108	10	48
P-H	5940-655-327	A064 TERMINAL BOARD: SAME AS A046		EA	1				EF	EF	EF	EF	EF	10	36 (TB2)
X2-H	6605-650-678	A065 PLATE, STRADDLE: SAME AS A047		EA	2									10	35
X2-H	5310-022-111	A066 WASHER LOCK: SAME AS A048		EA	14									10	32, 34, 47
X2-H	5310-939-106	A067 WASHER LOCK: MS35333-104 (96906)		EA	2									10	7
P-H	3040-220-523	A068 CONNECTING LINK, RIGID: 2580256 (07187)		EA	1				*	*	*	10	2	10	53
X2-H	5120-198-540	A069 KEY SCH SCREW: 0-050X1 3-4 (70276)		EA	1									10	67
P-H	6650-400-262	A070 MAGNIFIER: APP181 (06995)		EA	1				*	*	*	10	1	10	72
P-H	9905-229-658	A071 PLATE IDENTIFICATION: 2500541-9 (07187)		EA	1				*	*	*	10	1	10	2
P-H	6605-782-027	A072 PLATE SUPPORT MT- 3987/AS M- 339(V)		EA	1				*	*	*	10	1	10	

SECTION V REPAIR PARTS FOR DIRECT SUPPORT, GENERAL SUPPOR AND DEPOT MAINTENANCE (CONTINUED)

(1) SMR CODE	(2) FEDERAL STOCK NUMBER	(3) DESCRIPTION REFERENCE NUMBER & MFR. CODE	USABLE ON CODE	(4) UNIT OF MEA	(5) QTY INC UNIT	(6) 30-DAY DS MAINT ALLOWANCE (a) 1-2	(b) 21-50	(c) 51-100	(7) 30-DAY GS MAINT ALLOWANCE (a) 1-2	(b) 21-50	(c) 51-100	(8) UNIT PRICE EQUIP CONTGT	(9) DEPOT MAINT ALLOWANCE EQUIP	(10) ILLUSTRATIONS (a) FIG NO	(b) ITEM NO. OR REFERENCE DESIGNATION
P-H	5306-816-80	A073 BOLT EXT REL: 1700924 (07187)		EA	4				*	2	2	59	5	10	62
X2-H		A074 PIN STRAIGHT, HEADED: 1700921 (07187)		EA	1									10	65
P-H	6605-421-17	A075 PLATE, SUPPORT: 2580257 (07187)		EA	1				*	*	*	10	2	10	66
X2-H		A076 SCREW MACH FH: MS35209-21 (96906)		EA	4									10	64
X2-H	305-059-801	A077 SCREW MACH FH: MS35209-53 (96906)		EA	1									10	63
P-H	605-782-027	A078 PLATE ASSEMBLY, SUPPORT MT-3986/ASM-339(V)		EA	1				*	*	*	10	2	10	
P-H	5305-764-301	A079 BOLT EXT REL: 2519197 (07187)		EA	3				*	2	2	46	5	10	56
X2-H		A080 PIN STRAIGHT, HEADED: SAME AS A074		EA	1									10	59
P-H	6605-421-17	A081 PLATE SUPPORT: 2555562 (07187)		EA	1				*	*	*	10	2	10	60
X2-H		A082 SCREW MACH FH: SAME AS A076		EA	4									10	58
X2-H	5305-059-801	A083 SCREW MACH FH: SAME AS A077		EA	1									10	57
P-H	5210-900-004	A084 PLUMB BOB: B3120 (06995)		EA	1				*	2	2	19	5	10	70
X2-H	5305-790-855	A085 SCREW EXT REL: 1700815 (07187)		EA	1									10	52
P-O	5120-106-246	A086 SCREWDRIVER, FLAT TIP: 9801 (93389)		EA	1	*	*	*	*	*	*	5	1	10	69
P-O	5120-248-117	A087 SCREWDRIVER, FLAT TIP: BR181 (96508)		EA	1	*	*	*	*	*	*	10	2	10	71
P-O	6605-228-843	A088 SHADE, OPTICAL INSTRUMENT: 16283 (06995)		EA	1	*	*	*	*	*	*	5	1	10	54
-H-S	6650-801-167	A089 TELESCOPE AZIMUTH SU-45/ASM-339(V)		EA	1				*	*	*	10	3	10	51
P-H	4920-997-652	A090 SCREW ADJUSTING: 16138 (06995)		EA	1				*	*	*	10	10	10	51D
P-H	4920-929-615	A091 SCREW BINDER: 16145 (06995)		EA	1				*	*	*	10	10	10	51G
P-H	4920-997-653	A092 SCREW CLAMP ASSY: 16185 (06995)		EA	1					*	*	10	10	10	51C
P-H	5305-443-553	A093 SCREW, MACHINE: BB299 (06995)		EA	1					*	*	10	10	10	51B
P-H	5305-443-553	A094 SCREW, MACHINE: BB301 (06995)		EA	1					*	*	10	10	10	51E
P-H	6650-228-843	A095 SPRING ASSY, ADJUSTMENT: 16833 (06995)		EA	1					*	*	10	4	10	51F
P-H	6650-228-843	A096 SPRING ASSY, ADMUSTMENT: 16834 (06995)		EA	1					*	*	10	2	10	51H

SECTION V REPAIR PARTS FOR DIRECT SUPPORT, GENERAL SUPPORT, AND DEPOT MAINTENANCE (CONTINUED)

(1) SMR CODE	(2) FEDERAL STOCK NUMBER	(3) DESCRIPTION REFERENCE NUMBER & MFR. CODE	USABLE ON CODE	(4) UNIT OF MEAS	(5) QTY INC IN UNIT	(6) 30- (a) -20	(6) Y DS LOW (b) 1-5(	(6) INT (c) -1(	(7) 30-D (a) -20	(7) GS OWAR (b) 1-5(	(7) INT (c) 1-10	(8) 1 YR LW PE EQUIP NTGC(	(9) EPOI AINT WPE 100 QUIP	(10) ILLUSTRATIONS (a) FIG NO.	(10) (b) ITEM NO. OR REFERENCE DESIGNATION
P-H	920-929-61544	A0977 SCREWWTANGENTT ASSY: 16136 (06995)		EA	1				*	*	*	10	10	10	51A
P-H	5120-106-0116	A098 WRENCH PIN: A9215 (06995)		EA	1				*	*	*	16	1	10	68
?-O-R	6605-782-0291	A099 CABLE ASSY SPECIAL PURPOSE CX-10868/U (100 ft)		EA	1	*	*	*	*	*	*	10	3	1	9 (W1)
P-H	5970-940-9197	A100 INSULATION SLEEVING: 208A042-3 (08795)		EA	1				*	2	2	27	32	4	4
P-H	5970-104-4708	A101 INSULATION SLEEVING, ELECT: 228A042- 3 (08795)		EA	1				*	2	2	27	32	4	5
P-H	5970-906-1347	A102 BOOT THERMOFIT: 202A142-3 (08795)		EA	1				*	2	2	19	18	4	4
P-H	5935-149-2901	A103 CONN PLUG ELEC: MS3106A14S7P (96906)		EA	1				*	*	2	13	14	4	2 (W1P2)
P-H	5935 -805 -7783	A104 CONN PLUG ELEC: PT06A14-12S (77820)		EA	1				*	*	2	13	14	4	3 (W1P1)
?- O-R	6605-179-1706	A105 CABLE ASSY, SPECIAL PURPOSE ELECT CX-10867/U (200 ft.)		EA	1	*	*	*	*	*	*	10	3	1	11 (W3)
P-H	5970-940-9197	A106 INSULATION SLEEVING: SAME AS A100		EA	1				:EF	:E F	:EF	:E F	.EF	4	4
P-H	5970-104-4708	A107 INSULATION SLEEVING, ELECT: SAME AS A101		EA	1				:EF	:E F	:EF	:E F	.EF	4	5
P-H	5970-906-1347	A108 BOOT THERMOFIT: SAME AS A102		EA	1				:EF	:EF	:EF	:EF	.EF	4	4
P-H	5935 -061 -7372	A109 CONN PLUG ELEC: PT06A14-18S (77820)		EA	1				*	2	2	19	14	4	2 (W3P2)
P-H	5935-865-9599	A110 CONN PLUG ELEC: PT06A14-18P (77820)		EA	1				*	2	2	19	14	4	3 (W3P1)
P-H	5940-682-0768	A111 FERRULE ELEC: D121 (08795)		EA	8				2	3	5	89	512	4	8 (W3E2, W3E3, 3E5 thru W3E10)
P-H	5940-832-5787	A112 FERRULE ELEC CONDUCTOR: D123 (08795)		EA	2				*	2	2	27	32	4	7 (W3E1, W3E4)
P-H	5940-636-5539	A113 SPLICE CONDUCTOR: 34137 (00779)		EA	1				*	2	2	19	12	4	6 (W3BG1)
?-O-R	6605-782-0237	A114 CABLE ASSY, SPECIAL PURPOSE ELECT: CX-10867/U (50 ft.)		EA	1	*	*	*	*	*	*	10	3	1	7 (W2)
P-H	5970-940-9197	A115 INSULATION SLEEVING: SAME AS A100		EA	1				:EF	:E F	:EF	:E F	.EF	4	4
P-H	5970-104-4708	A116 INSULATION SLEEVING, ELECT: SAMEAS A101		EA	1				:EF	:E F	:EF	:E F	EF	4	5
P-H	5970-906-1347	A117 BOOT THERMOFIT: SAMEAS A102		EA	1				.EF	:EF	:E F	:E F	:E F	4	4
P-H	5935-061-7372	A118 CONN PLUG ELEC: SAME AS A109		EA	1				:EF	:EI	:EI	:E F	:EF	4	2 (W2P2)
P-H	5935-865-9599	A1 19 CONN PLUG ELEC: SAME AS A110		EA	1				:EF	:EI	:EI	:EF	:E F	4	3 (W2P1)

SECTION V REPAIR PARTS FOR DIRECT SUPPORT, GENERAL SUPPORT, AND DEPOT MAINTENANCE (CONTINUED)

(1) SMR CODE	(2) FEDERAL STOCK NUMBER	(3) DESCRIPTION REFERENCE NUMBER & MFR. CODE	USABLE ON CODE	(4) UNIT OF MEAS	(5) QTY INC IN UNIT	(6) 30-DAY DOLLAR MAINTENANCE (a) 1-20	(b) 1-5	(c) 51-100	(7) 30-DAYS OWAR (a) -20	(b) 1-50	(c) 1-10	(8) 1 YR ALW PER EQUIP CNTGCY	(9) DEPOT MAIN LWP 100 QUI	(10) ILLUSTRATIONS (a) FIG NO.	(b) ITEM NO. OR REFERENCE DESIGNATION
P-H	5940-682-0768	A120 FERRULE ELEC : SAME AS A111		EA	8				EF	EF	EF	E F	E F	4	8 (W2E2, W2E3, V2E5 thru W2E10)
P-H	5940-832-5787	A121 FERRULE ELEC CONDUCTOR: SAME AS A112		EA	2				EF	E F	E F	E F	E F	4	7 (W2E1, W2E4)
P-H	5940-636-5539	A122 SPLICE CONDUCTOR: SAME AS A113		EA	1				E F	EF	EF	E F	EF	4	6 (W2BG1)
H-O-S		A123 CASE, CALIBRATOR SET CY-6479/ASM-339 (V): R2456 (98376)		EA	1									1	20
X1-H		A124 CHART CONTENTS: 2557574 (07187)		EA	1									1	3
H-O-S	6605-782-0231	A125 CONTROL, MAGNETIC COMPASS CALIBRATOR SET C-7694/ASM-339(V)		EA	1	*	*	*	*	*	*	10	3	1	15
H-O-S		A126 CASE CONT CSL: ZCC254-254D2454 (98376)		EA	1									7	6
P-O	5920-879-3570	A127 FUSE CARTRIDGE: F02A250V1 1- 2AS (81349)		EA	5	2	4	8	3	2	2	175	75	7	5
P-O	6240-223-9100	A128 LAMP GLOW: NE51 (71744)		EA	2	3	7	13	4	4	4	324	900	7	5A
X1-H		A129 PANE L AND RACK ASSY: 2592574 (07187)		EA	1									7	3
-H-S	4920-761-2421	A130 AMPLIFIER REGULATOR: 2587200 (07187)		EA	2				*	1	1	19	6	13	39 (1 A1, 1A2)
P-H	6135-802-5479	A131 BATTERY MERCURY: RM1RT2 (37942)		EA	2				*	2	2	46	20	20	44 (1A1BT1, 1A2BT1)
P-H	5340-721-7384	A132 BUSHING RUBBER: 1700432-2 (07187)		EA	2				2	2	3	53	7	20	8
P-H	5910-754-9392	A133 CAP FXD CERAMIC: 8133003X5 R222M (72982)		EA	2				*	2	2	19	12	20	15 (1A1C4, 1A2C4)
P-H	5910-883-0205	A134 CAP FIXED ELECT: CL37BQ010MN3 (81349)		EA	2				*	2	2	19	8	20	23 (1A1C1, 1A2C1)
P-H	5910-724-5251	A135 CAP FIXED ELECT: CL27BE400UN3 (81349)		EA	2				*	2	2	19	8	20	45 (1A1C6, 1A2C6)
P-H	5910-082-4694	A136 CAP FIXED ELECT: CL27BG200UN3 (81349)		EA	2				*	2	2	19	8	20	42 (1A1C2, 1A2C2)
P-H	5910-851-5465	A137 CAP FIXED ELECT: CL35BD060MP3 (81349)		EA	2				*	2	2	19	8	20	46 (1A1C14, 1A2C14)
P-H	5910-682-3729	A138 CAP FIXED ELECT: CL25BG100UP3 (81349)		EA	6				2	2	3	71	8	20	17 (1A1C8, 1A2C8, 1A2C9) 41 (1A1C11, 1A2C10, 1A2C11)
P-H	5910-057-5218	A139 CAP FIXED ELECT: CL25BJ180TP3 (81349)		EA	1				*	2	2	19	8	20	40 (1 A1C3, 1A2C3)
P-H	5910-849-5261	A140 CAP FIXED PAPER: CP08A1KB334K3 (81349)		EA	1				*	2	2	19	9	20	16 (1A1C7, 1A2C7)
P-H	5910-811-0961	A141 CAP FIXED PAPER: CP08A2KE474K3 (81349)		EA	1				*	2	2	19	9	20	4 (1A1C5, 1A2C5)
P-H	5910-686-9040	A142 CAP FIXED PAPER: 196P56491S4 (56289)		EA	2				*	2	2	19	9	20	5 (1A1C2, 1A2C2)

SECTION V REPAIR PARTS FOR DIRECT SUPPORT, GENERAL SUPPORT, AND DEPOT MAINTENANCE (CONTINUED)

(1) SMR CODE	(2) FEDERAL STOCK NUMBER	(3) DESCRIPTION REFERENCE NUMBER & MFR. CODE	USABLE ON CODE	(4) UNIT OF MEAS	(5) QTY INC IN UNIT	30-DAY DS MAINT ALLOWANCE (a) -20	(b) 1-50	(c) -10	30-D (a) -20	GS .OWAI (b) 1-5	INT (c) 1-10	(8) 1 YR W PER QUIP ITGCY	(9) EPO' AINT WPE 100 QUIP	(10) ILLUSTRATIONS (a) FIG NO.	(b) ITEM NO. OR REFERENCE DESIGNATION
M-H		A143 CHASSIS ELECTRICAL: 2587203 (07187)		EA	1									20	51
P-H	5340-803-5003	A144 CLIP MOUNTING, BATTERY: 1717140 (07187)		EA	1				*	2	2	19	10	20	58
X2-H	5310-801-8544	A145 INSERT SCREW: S256-1C (46384)		EA	2									20	60
X2-H	5310-801-8550	A146 INSERT SCREW: S632-1C (46384)		EA	1									20	59
P-H	5910-608-4544	A147 RETAINER CAPACITOR: 730432-11 (56232)		EA	5				2	3	5	39	7	20	56
P-H	5910-648-8520	A148 RETAINER CAP: 730432-12 (56232)		EA	4				2	3	5	39	7	20	57
P-H	5910-518-4608	A149 RETAINER CAPACITOR: 730432-14 (56232)		EA	2				*	2	2	46	7	20	55
X2-H	5320-233-4781	A150 RIVET SOLID: MS20426AD2-2 (96906)		EA	2									20	52
X1-H		A151 RIVET TUBULAR: MS16535-21 (96906)		EA	6									20	53
X1-H		A152 RIVET TUBULAR: MS16535-22 (96906)		EA	8									20	54
P-H	5961-519-7816	A153 DIODE GERMANIUM: 1N315 (03508)		EA	4				*	2	2	27	32	20	24 1A1CR1, 1A2CR1, 1A1CR2, 1A2CR2)
P-H	5325-884-7160	A154 GROMMET RUBBER: 2223 (76385)		EA	4				2	4	8	175	17	20	49
X1-H		A155 LEAD ASSY, ELECTRICAL: 2580320 (07187)		EA	1									20	
P-H	5961-899-9352	A156 MOUNTING, SINGLE TRANSISTOR: A51042 (08289)		EA	2				*	2	2	40	24	20	47
P-H	5960-991-8781	A157 MOUNTING SINGLE TRANSISTOR: A51043 (08289)		EA	6				2	2	3	71	288	20	48
P-H	5950-773-9958	A158 REACTOR ASSY: 435118 (07187)		EA	1				*	*	2	16	16	20	10 (1A1L1, 1A2L1)
P-H	5905 -279 -1879	A159 RES FIXED COMP: RC20GF270J (81349)		EA	4				*	2	2	40	7	20	13 (1A1R1, 1A2R1, 1A1R2, 1A2R2)
P-H	5905-279-3518	A160 RES FIXED COMP: RC20GF300J (81349)		EA	2				*	2	2	19	7	20	34 (1A1R23, 1A2R23)
P-H	5905-279-1885	A161 RES FIXED COMP: RC20GF360J (81349)		EA	2				*	2	2	19	7	20	18 (1A1R8, 1A2R8)
P-H	5905-279-3517	A162 RES FIXED COMP: RC20GF510J (81 349)		EA	2				*	2	2	19	7	20	32 (1A1R17, 1A2R17)
P-H	5905-279-3514	A163 RES FIXED COMP: RC20GF181J (81349)		EA	1				*	2	2	19	7	20	19 (1A1R6, 1A2R6)
P-H	5905-299-1965	A164 RES FIXED COMP: RC20GF301J (81349)		EA	12				2	3	5	95	7	20	14 (1A1R3, 1A2R3, 1A1R4, 1A2R4, 1A1R10 thru 1A1R13, 1A2R10 thru 1A2R13)

(1) SMR CODE	(2) FEDERAL STOCK NUMBER	(3) DESCRIPTION REFERENCE NUMBER & MFR. CODE	USABLE ON CODE	(4) UNIT OF MEAS	(5) QTY INC IN UNIT	(6) 30-DAY DS MAINT ALLOWANCE (a) 1-20	(b) 21-50	(c) 51-100	(7) 30-DAY GS MAINT ALLOWANCE (a) 1-20	(b) 21-50	(c) 51-100	(8) 1 YR ALW PER EQUIP CNTGCY	(9) DEPOT MAINT ALW PER 100 EQUIP	(10) ILLUSTRATIONS (a) FIG NO.	(b) ITEM NO. OR REFERENCE DESIGNATION
P-H	5905 -279 -3511	A165 RES FIXED COMP:			2				*	2	2	19	7	20	12 (1A1R9, 1A2R9)
P-H	5905-195-6806	A166 RES FIXED COMP: RC20GF102J (81349)		EA	2				*	2	2	19	7	20	21 (1A1R5, 1A2R5)
P-H	5905-279-3505	A167 RES FIXED COMP: RC20GF392J (81349)		EA	4				*	2	2	40	7	20	30 (1A1R18, 1A2R18, 1A1R24, 1A2R24)
P-H	5905-279-3504	A168 RES FIXED COMP: RC20GF472J (81349)		EA	2				*	2	2	19	7	20	33 (1A1R25, 1A2R25)
P-H	5905-279-2019	A169 RES FIXED COMP: RC20GF512J (81349)		EA	8				2	2	3	71	7	20	29 (1A1R15, 1A2R15, 1A1R19, 1A2R19, 1A1R20, 1A2R20, 1A1R22, 1A2R22)
P-H	5905-299-1971	A170 RES FIXED COMP: RC20GF822J (81 349)		EA	2				*	2	2	19	7	20	35 (1A1R7, 1A2R7)
P-H	5905-185-8510	A171 RES FIXED COMP: RC20GF103J (81349)		EA	4				*	2	2	40	7	20	31 (1A1R16, 1A2R16, 1A1R21, 1A2R21)
P-H	5905-195-6761	A172 RES FIXED COMP: RC20GF104J (81349)		EA	2				*	2	2	33	7	20	28 (1A1R14, 1A2R14)
P-H	5905-755-2089	A173 RES FIXED WW: M50-3350-5PCT (80031)		EA	2					2	2	19	12	20	22 (1A1R26, 1A2R26)
P-H	5905-842-0610	A174 RES THERMAL: 23D12 (83186)		EA	2					2	3	59	5	20	20 (1 A1RT1, 1A2RT1)
P-H	5910-578 -8885	A175 RETAINER CAP: 730432-16 (56232)		EA	1					2	2	19	7	20	3
X2-H	5305-531-9520	A176 SCREW MACH PAN HD: MS35233-2 (96906)		EA	4									20	2, 37
X2-H	5305-579-0969	A177 SCR MACH PAN HD: MS35233-31 (96906)		EA	1									20	6
P-H	5940-704-6091	A178 TERM FEEDTHRU, INSULATED: SE089B01 (98291)		EA	69					22	42	990	2	20	50
P-H	5950-657-7708	A179 TRANSFORMER: 618506 (07187)		EA	2					2	2	19	7	20	39 (1A1T1, 1A2T1)
P-H	5961-078-9593	A180 TRANSISTOR: 2N539 (21845)		EA	4					2	2	40	24	20	11 (1A1Q3, 1A2Q3, 1A1Q4, 1A2Q4)
P-H	5961 -892-3473	A181 TRANSISTOR: 2N526 (03508)		EA	9					3	5	95	216	20	43 (1A1Q1, 1A2Q1, 1A1Q2, 1A2Q2, 1A1Q5 thru 1A1Q8, 1A2Q5 thru 1A2Q8)
X2-H	5310 -722-5998	A182 WASHER FLAT: MS15795-805 (96906)		EA	1									20	7
X2-H	5310-619-1148	A183 WASHER FLAT: MS15795-808 (96906)		EA	1									20	9
X2-H	5310 -543-4652	A184 WASHER LOCK: MS35333-69 (96906)		EA	2									20	38
~~H-HS~~		A185 WIRING HARNESS, BRANCHED: 2587196 (07187)		EA	1									20	

SECTION v REPAIR PARTS FOR DIRECT SUPPORT, GENERAL SUPPORT, AND DEPOT MAINTENANCE (CONTINUED)

(1) SMR CODE	(2) FEDERAL STOCK NUMBER	(3) DESCRIPTION REFERENCE NUMBER & MFR. CODE	USABLE ON CODE	(4) UNIT OF MEAS	(5) QTY IN UNIT	(6) 30-DAY DS MAINT ALLOWANCE (a) 1-20	(b) 21-50	(c) 51-100	(7) 30-DAY GS MAINT ALLOWANCE (a) 1-20	(b) 21-50	(c) 51-100	(8) UNIT WT PER UNIT TGC	(9) UNIT CUBE PER UNIT TGC	(10) ILLUSTRATIONS (a) FIG NO.	(b) ITEM NO. OR REFERENCE DESIGNATION
P-H	5935-104-3499	A186 CONN RECP ELEC: 18-20PGDFS (95238)		EA					*		2	9	.4	0	26 (1A1J1, 1A2J1)
P-H	5940-257-5677	A187 TERMINAL LUG: 244848 (07187)		EA					*		2	9	3	0	27 (1E1)
-HS	4920-977-6409	A188 AMPLIFIER ANGLE IND: 2588276 (07187)		EA					*		*	.0	3	3	36 (1A7)
P-H	5340-732-2883	A189 BUSHING RUBBER: 1700432-1 (07187)		EA					*		2	.9	7	9	26
P-H	5340-721-7384	A190 BUSHING RUBBER: SAME AS A132		EA					REF	EF	REF	EF	.E I	9	25
-H-S		A191 CABLE ASSY ELECTRICAL: 2581006 (07187)		EA										9	
P-H	5935-982-7836	A192 CONN RECP ELEC: SM26-20PGDS (95238)		EA					*		2	13	14	9	36 (1A7J1)
C2-H	5940-549-7247	A193 LUG: 341 (79963)		EA										9	37 (E1)
P-H	910-821-447	A194 CAP FXD DIELEC: 118P82492S4 (56289)		EA	1				*		2	13	9	9	55 (1A7C18)
P-H	910-850-0832	A195 CAP FIXED ELECT: D340KN6M1 (12954)		EA	2				2	2	3	71	8	9	46 1A7C28, 1A7C29)
P-H	910-960-8659	A196 CAP FIXED ELECT: K1J35KS (05397)		EA	1				*	2	2	33	8	.9	17 (1 A7C9)
P-H	910-809-4701	A197 CAP FIXED ELECT: K6R8J35KS (05397)		EA	2				2	2	3	59	8	.9	5 (1A7C8, 1A7C14)
P-H	910-574-201	A198 CAP FIXED ELECT: K22J15KS (05397)		EA	4				2	3	5	107	8	19	38 (1A7C25) 51 (1A7C1, 1A7C4, 1A7C12)
P-H	910-851-2095	A199 CAP FIXED ELECT: K22J35KS (05397)		EA	2				2	2	3	59	8	19	57 (1 A7C22, 1A7C24)
P-H	5910-669-1752	A200 CAP FIXED PAPER: 196P10391S4 (56289)		EA	4				*	2	2	40	9	19	54 (1A7C16, 1A7C17) 63 (1A7C6, 1A7C20)
P-H	5910-553-3437	A201 CAP FIXED PAPER: 196P15391S4 (56289)		EA	3				*	2	2	33	9	19	61 (1A7C3) 63 (1A7C6, 1A7C20)
P-H	5910-849-0697	A202 CAP FIXED PAPER: CP09A1KB393K3 (81349)		EA	3				*	2	2	33	9	19	63 (1A7C6, 1A7C20) 67 (1A7C27)
P-H	910-989-126	A203 CAP FIXED ELECT: 196P27391S4 (56289)		EA	2				*	2	2	19	9	19	63 (1A7C6, 1A7C20)
P-H	910-649-063	A204 CAP FIXED ELECT: 196P33391S4 (56289)		EA	2				*	2	2	19	9	19	63 (1A7C6, 1A7C20)
P-H	5910-686-9041	A205 CAP FIXED ELECT: 196P39391S4 (81349)		EA	5				*	2	2	6	9	19	52 (1A7C7, 1A7C13, 1A7C15) 63 (1A7C6, 1A7C20)
P-H	5910-989-1239	A206 CAP FIXED ELECT: 196P47391S4 (56289)		EA	2				*	2	2	19	9	19	63 (1A7C6, 1A7C20)

(1) SMR CODE	(2) FEDERAL STOCK NUMBER	(3) DESCRIPTION REFERENCE NUMBER & MFR. CODE / USABLE ON CODE	(4) UNIT OF MEAS	(5) QTY INC IN UNIT	(6) 30-DAY DS MAINT ALLOWANCE (a) 1-20	(b) 21-50	(c) 51-100	(7) 30-DAY GS MAINT ALLOWANCE (a) 1-20	(b) 21-50	(c) 51-100	(8) 1 YR ALW PER EQUIP CNTGCY	(9) DEPOT MAINT ALW PER 100 EQUIP	(10) ILLUSTRATIONS (a) FIG NO.	(b) ITEM NO. OR REFERENCE DESIGNATION
P-H	5910-826-3122	A207 CAP FIXED ELECT: 196 P56391S4 (56289)	EA	1				*	*	2	13	9	19	49 (1A7C10)
P-H	5910-644-3818	A208 CAP FIXED ELECT: 196 P10491S4 (56289)	EA	2				*	2	2	19	9	19	31 (1A7C5, 1A7C19)
P-H	5910-984-7982	A209 CAP FIXED, ELECTROLYTIC: 3K40-107 (06751)	EA	1				*	*	2	13	8	19	56 (1A7C23)
P-H	5910-940-2972	A210 CAP FIXED, ELECTROLYTIC: 3K50-826 (06751)	EA	2				*	2	2	19	8	19	59 (1A7C21, 1A7C26)
P-H	5961-904-3486	A211 CLIP SPRING TENSION: TXB2P032-037 (98978)	EA	2				*	2	2	46	7	19	70
K1-H		A212 LEAD ASSY ELECTRICAL: 2581007 (07187)	EA	1									19	
K2-H	5310-262-5997	A213 NUT SELF LOCK: MS20365D632A (96906)	EA	1									19	27
P-H	5950-807-8572	A214 REACTOR: DOT27 (80223)	EA	1				*	*	2	13	3	19	22 (1A7L2)
P-H	5950-773-9958	A215 REACTOR ASSY: SAME AS A158	EA	2				REF	REF	REF	REF	REF	19	28 (1A7L1) 65 (1A7L3)
P-H	5905-190-8883	A216 RES FIXED COMP: RC20GF100J (81349)	EA	1				*	*	2	13	7	19	43 (1A7R20)
P-H	5905-299-2041	A217 RES FIXED COMP: RC32GF302J (81349)	EA	1				*	*	2	13	7	19	3 (1A7R21)
P-H	5905-802-6730	A218 RES FIXED COMP: RC07GF470J (81349)	EA	1				*	*	2	13	7	19	13 (1A7R14)
P-H	5905-835-1635	A219 RES FIXED COMP: RC07GF620J (81349)	EA	1				*	*	2	13	7	19	7 (1A7R18)
P-H	5905-683-2239	A220 RES FIXED COMP: RC07GF201J (81349)	EA	1				*	*	2	13	7	19	32 (1A7R23)
P-H	5905-682-4109	A221 RES FIXED COMP: RC07GF561J (81349)	EA	2				*	2	2	19	7	19	14 (1A7R12) 62 (1A7R2)
P-H	5905-801-6998	A222 RES FIXED COMP: RC07GF621J (81349)	EA	1				*	*	2	13	7	19	62 (1A7R2)
P-H	5905-727-8001	A223 RES FIXED COMP: RC07GF681J (81349)	EA	1				*	*	2	13	7	19	62 (1A7R2)
P-H	5905-807-4954	A224 RES FIXED COMP: RC07GF751J (81349)	EA	1				*	*	2	13	7	19	62 (1A7R2)
P-H	5905-686-9996	A225 RES FIXED COMP: RC07GF821J (81349)	EA	1				*	*	2	13	7	19	62 (1A7R2)
P-H	5905-801-6444	A226 RES FIXED COMP: RC07GF911J (81349)	EA	1				*	*	2	13	7	19	62 (1A7R2)
P-H	5905-681-6462	A227 RES FIXED COMP: RC07GF102J (81349)	EA	1				*	*	2	13	7	19	62 (1A7R2)
P-H	5905-686-9994	A228 RES FIXED COMP: RC07GF122J (81349)	EA	1				*	*	2	13	7	19	62 (1A7R2)
P-H	5905-682-4095	A229 RES FIXED COMP: RC07GF162J (81349)	EA	1				*	*	2	13	7	19	64 (1A7R22)

(1) SMR CODE	(2) FEDERAL STOCK NUMBER	(3) DESCRIPTION REFERENCE NUMBER & MFR. CODE	USABLE ON CODE	(4) UNIT OF MEAS	(5) QTY INCL IN UNIT	30- FDS LOWA MAINT CE (a) 1-20	(b) 1-50	(c) 51-100	30-D GS OWANC (a) -20	(b) 1-50	INT (c) -100	(8) 1 YR EW PER EQUIP NTGCY	(9) EPOT AINT W PER 100 QUIP	(a) FIG NO.	ITEM NO. OR REFERENCE DESIGNATION
P-H	905-686-337	A230 RES FIXED COMP: RC07GF202J (81349)		EA	4				*	2	2	40	7	19	19 (1A7R7, 1A7R8) 30 (1 A7R24, 1A7R1)
P-H	905-681-996	A231 RES FIXED COMP: RC07GF332J (81349)		EA	1				*	*	2	13	7	19	60 (1A7R27)
P-H	905-683-224	A232 RES FIXED COMP: RC07GF512J (81349)		EA	3				*	2	2	33	7	19	6 (1A7R19, 1A7R29) 68 (1A7R9)
P-H	905-691-019	A233 RES FIXED COMP: RC07GF562J (81 349)		EA	1				*	*	2	13	7	19	42 (1A7R26)
P-H	905-682-410	A234 RES FIXED COMP: RC07GF622J (81 349)		EA	1				*	*	2	13	7	19	33 (1A7R5)
P-H	905-681-997	A235 RES FIXED COMP: RC07GF822J (81349)		EA	1				*	*	2	13	7	19	58 (1A7R25)
P-H	905-683-233	A236 RES FIXED COMP: RC07GF103J (81349)		EA	4				*	2	2	40	7	19	20 (1 A7R4, 1A7R10, 1A7R13, 1A7R28)
P-H	905- 687-000	A237 RES FIXED COMP: RC07GF183J (81349)		EA	1				*	*	2	13	7	19	34 (1A7R3)
P-H	905-686-336	A238 RES FIDED COMP: RC07GF203J (81349)		EA	2				*	2	2	19	7	19	18 (1A7R11) 53 (1A7R17)
P-H	905-686-383	A239 RES FIXED COMP: RC07GF273J (81 349)		EA	1				*	*	2	13	7	19	12 (1A7R15)
P-H	905-686-335	A240 RES FIXED COMP: RC07GF393J (81349)		EA	1				*	*	2	13	7	19	21 (1 A7R6)
P-H	905-683-224	A241 RES FIXED COMP: RC07GF473J (81349)		EA	1				*	*	2	13	7	19	45 (1A7R16)
P-H	905-681-881	A242 RES FIXED COMP: RC07GF105J (81 349)		EA	1				*	*	2	13	7	19	30A (1A7R30)
X2-1	305-550-500	A243 SCR MACH PAN HD: SAME AS A013		EA	1									19	40
X2-1	305-543-277	A244 SCR MACH PAN HD: MS35233-35 (96906)		EA	1									19	23
P-H	961-653-994	A245 SEMICONDUCTOR: SG28 (99180)		EA	2				*	2	2	46	32	19	48 (1A7CR3A) (1A7CR3B) (1A7CR3C) 15 (1A7CR3D) 47 (1A7CR4A) (1A7CR4B) 16 (1 A7CR4C) (1A7CR4D)
P-H	961-873-197	A246 SEMICCNDUCTOR: JANIN645 (81 350)		EA	8				2	3	5	95	578	19	2 (1A7CR7) (1A7CR8) (1A7CR9) (1A7CR10) (1A7CR11) 50 (1 A7CR12) (1 A7CR13) (1A7CR14)

SECTION v REPAIR PARTS FOR DIRECT SUPPORT, GENERAL SUPPORT, AND DEPOT MAINTENANCE (CONTINUED)

(1) SMR CODE	FEDERAL STOCK NUMBER	DESCRIPTION REFERENCE NUMBER & MFR. CODE	USABLE ON CODE	(4) UNIT OF MEA	(5) QTY INC IN UNIT	(6) 30-DAY DS MAINT ALLOWANCE (a) 1-20	(b) 21-50	(c) 51-100	(7) 30 DAY GS MAINT ALLOWANCE (a) -20	(b) 21-50	(c) 51-100	(8) LWR EQUIP MTG		(10) ILLUSTRATIONS (a) FIG NO	(b) ITEM NO. OR REFERENCE DESIGNATION
P-H	961-068-8551	A247 SEMICONDUCTOR: SG85 (03877)		EA	2				*	*	2	16		19	11 (1A7CR6) 66 (1 A7CR5)
M-H		A248 TERMINAL BOARD: 2588274 (07187)		EA	1									19	75
X2-H		A249 CLIP ELECTRICAL: 6013-15C (91506)		EA	2									19	81
X2-H		A250 CLIP ELECTRICAL: 6007-8C (91506)		EA	3									19	79
X2-H	940-842-3847	A251 CLIP ELECTRICAL: 6009-17C (91506)		EA	7									19	77
X2-H	940-725-6033	A252 CLIP SPG TENSION: MS17160-21 (96906)		EA	2									19	83
P-H	910-518-4608	A253 RETAINER CAPACITOR: SAME AS A149		EA	1				REF	REF	REF	REF		19	85
X1-H		A254 RIVET SOLID AL: UNIVHD1-16X5-32 (42838)		EA	9									19	76, 84
X1-H		A255 RIVETSOLID AL: UNIVHD3-32X5-32 (42838)		EA	9									19	78, 80, 82
M-H		A256 SPACER: 2555743 (07187)		EA	4									19	86
P-H	940-842-6478	A257 TERM FEEDTHRU: FTSM2C6P16 (98291)		EA	1				*	*	2	13		19	74
P-H	940-704-6091	A258 TERM FEEDTHRU INSULATED: SAME AS A178		EA	87				REF	REF	REF	REF		19	72
P-H	40-685-8542	A259 TERM FEEDTHRU: FT995DTUR (98291)		EA	2					2	2	19		19	73
P-H	40-901 -1405	A260 TERMINAL, STUD: SEQ089B01 (81349)		EA	3				*	2	3	71		19	71
P-H	05-850-9100	A261 THERMISTER: TE11C18R (04239)		EA	1					*	2	3		19	44 (1A7RT1)
P-H	70-237-5662	A262 THERMOFIT: D306-11 (08795)		EA	3					2	2	33		19	7
P-H	50-851-4221	A263 TRANSFORMER AUDIO FREQUENCY: DOT25 (80223)		EA	2					2	2	33		19	4 (1A7T3, 1A7T6)
P-H	50-799-4163	A264 TRANSFORMER AF: DOT36 (80223)		EA	4					2	2	40		19	10 (1 A7T1) (1 A7T2) (1 A7T4) (1A7T5)
P-H	50-911-3440	A265 TRANSFORMER EXC: 63099 (10109)		EA	1					*	2	13		19	41 (1A7T7)
P-H	61-104-5855	A266 TRANSISTOR: 2N4221 (04713)		EA	2					2	2	40		19	29 (1A7Q1) (1 A7Q7)
P-H	61-787-5305	A267 TRANSISTOR: 2N718A (07263)		EA	3					2	2	27		19	8 (1A7Q2) (1A7Q3) (1A7Q4)
P-H	5961-752-6081	A268 TRANSISTOR: JAN2N657 (81350)		EA	2					2	2	40		19	39 (1A7Q5) (1A7Q6)

SECTION v REPAIR PARTS FOR DIRECT SUPPORT, GENERAL SUPPORT, AND DEPOT MAINTENANCE (CONTINUED)

(1) SMR CODE	(2) FEDERAL STOCK NUMBER	(3) DESCRIPTION REFERENCE NUMBER & MFR. CODE	USABLE ON CODE	(4) UNIT OF MEAS	(5) QTY INCL UNIT	(6) 30-DAY DS MAINT ALLOWANCE (a) 1-20	(b) 21-50	(c) 51-100	(7) 30-D (a) -20	(b) 1-5	INT (c) 1-10	(8) LY LW PI EQUI NTGC	(9) EPOI AINT WPE 100 QUIP	(10) ILLUSTRATIONS (a) FIG NO.	(b) ITEM NO. OR REFERENCE DESIGNATION
X2-H	5310-619-1148	A269 WASHER FLAT: SAME AS A183		EA	2									19	24
X2-H	5340-680-4562	A270 CLAMP LOOP: 1-4-4-140 (95987)		EA	1									13	9
X2-H		A271 CLAMP LOOP: 7-16-4-140 (95987)		EA	3									13	5, 10
P-H-S	4920-761-2420	A272 GEAR CASE MOTOR: 2587201 (07187)		EA	2				*	*	2	16	6	13	29 (1A3, 1A4)
P-H	6105-229-6542	A273 BASE MOT CONTROL: 1751618 (07187)		EA	1				*	*	2	16	3	17	20
P-H	3040-220-5238	A274 SHAFT, SHOULDERED: 1717015 (07187)		EA	1				*	2	2	19	2	17	21
P-H	3040-220-5236	A275 SHAFT, SHOULDERED: 1717016 (07187)		EA	1				*	2	2	19	2	17	22
X2-H	6605-715-4761	A276 CLAMP: 327417 (56232)		EA	3									17	13
P-H	6605-787-1617	A277 COLLAR SHAFT: 327470 (56232)		EA	1				*	2	2	19	4	17	6
P-H	5935-104-3498	A278 CONN RECP ELEC: 11-20PGDFS (95238)		EA	2				*	2	2	19	14	17	15 (1A3J1, 1A4J1)
P-H	6605-715-4758	A279 COVER GEARING ASSY: 1717075 (07187)		EA	1				*	2	2	19	12	17	2
P-H	4920-758-1147	A280 GEAR CLUSTER: 1751619 (07187)		EA	2				*	2	2	40	4	17	10
P-H	6605-715-4760	A281 GEAR SUB ASSY: 1751620 (07187)		EA	1				*	2	2	19	4	17	7
P-H	5325-834-7160	A282 GROMMET RUBBER: SAME AS A154		EA	4				REF	REF	REF	REF	REF	17	19
M-H		A283 LEAD ASSY: 2580321 (07187)		EA	1									17	
P-H	6105-806-8614	A284 MOTOR TACH GEN: 6229-12 (77045)		EA	2				*	*	2	16	3	17	14 1A3MG1, 1A4MG1
P-H	5905-755-0858	A285 RESISTOR VAR, LINEAR PREC: 930-6009 (02335)		EA	2				*	2	2	19	3	17	8 (1A3R1, 1A4R1)
P-H	5340-816-2047	A286 RING RETAINING: MS16633-2009 (96906)		EA	2				*	2	2	40	3	17	9
X2-H		A287 SCR MACH FIL H: SS3-48X1-4 (70318)		EA	3									17	11
X2-H	5305-274-0529	A288 SCR MACH FIL H: SS4-40X1 (70318)		EA	4									17	3
X2-H	5305-803-8232	A289 SETSCREW HEX: MS51029-9 (96906)		EA	2									17	5
P-H	5940-665-9580	A290 SPLICE COND: 34130 (00779)		EA	2				*	2	2	40	48	17	17 (1E2, 1E3)
X2-H	5940-050-2308	A291 TERMINAL LUG: MS35431-3 (96906)		EA	1									17	16 (1E1)
X2-H	5310-367-9198	A292 WASHER LOCK: CRESNO-3 (70318)		EA	3									17	12
X2-H	5310-933-8118	A293 WASHER LOCK: MS35338-135 (96906)		EA	4									17	4

SECTION V REPAIR PARTS FOR DIRECT SUPPORT, GENERAL SUPPORT, AND DEPOT MAINTENANCE (CONTINUED)

(1) SMR CODE	(2) FEDERAL STOCK NUMBER	DESCRIPTION REFERENCE NUMBER & MFR. CODE	USABLE ON CODE	(4) UNIT OF MEAS	(5) QTY INCL IN UNIT	(6) 30-DAYS ALLOWANCE (a) -20	(b) 1-50	(c) -100	(7) 30-DAYS ALLOWANCE (a) -20	(b) 1-50	(c) 1-100	(8) 1 YR WPER EQUIP TGCY	(9) DEPOT MAINT. WPER 100 EQUIP	(10) ILLUSTRATIONS (a) FIG NO.	(b) ITEM NO. OR REFERENCE DESIGNATION
M-H		A294 LEAD ASSY: 2580469 (07187)		EA	1									13	
P-H	6645-732-542	A295 METER TIME, TOTALIZING: K19203D0A (82227)		EA	1				*	*	*	10	2	13	35 (1DS8)
K1-H		A296 PANEL ASSY, CONTROLE CONSOLE: 2592573 (07187)		EA	1									13	26
M-H		A297 BRACKET ANGLE : 2555828 (07187)		EA	1									16	28
K2-H	5340-089-066	A298 CLIP ELECTRICAL: 6009-16C (91506)		EA	1									16	30
K1-H		A299 RIVET TUBULAR: MS16535-76 (96906)		EA	1									16	29
P-H	5975-068-079	A300 CABLE NIPPLE : TC4001CRN (08795)		EA	1				*	*	2	13	3	16	25
P-H	4920-114-004	A301 DIAL: H492-3 (80294)		EA	1				*	*	*	10	5	16	11A
P-H	5355-852-052	A302 DIAL CONTROL: RBC (731 38)		EA	4				*	2	2	27	5	16	9
P-O	5920-879-357	A303 FUSE CARTRIDGE : SAME AS A127		EA	2	REF	REF	REF	REF	REF	REF	REF	REF	16	21 (1F1, 1F2)
P-H	5920-892-931	A304 FUSE HOLDER: FHN26G1 (8 1349)		EA	2				*	*	8	16	12	16	22
P-H	6615-092-074	A305 HANDLE , BOW: 224376 (56232)		EA	2				*	2	2	19	14	16	49
H-S	6605-835-564	A306 IND HEADING ERROR: 25 88156-1 (07187)		EA	1	*	*	*	*	*	*	10	3	16	35 (1A8)
P-H	3110-588-735	A307 BEARING, BALL, ANNULAR: SFR1445PP25-24 (83086)		EA	8				2	3	5	107	5	21	61
P-H	5910-815-893	A308 CAP FIXED PAPER: 196P15291S4 (56289)		EA	1				*	*	2	13	9	21	12 (1A8C5)
P-H	5910-669-428	A309 CAP FIXED PAPER: 196P22291S4 (56289)		EA	1				*	*	2	13	9	21	12 (1A8C5)
P-H	5910-615-044	A310 CAP FIXED PAPER: 196P33291S4 (56289)		EA	1				*	*	2	13	9	21	12 (1A8C5)
P-H	5910-660-472	A311 CAP FIXED PAPER: 196P47291S4 (56289)		EA	1				*	*	2	13	9	21	12 (1A8C5)
P-H	5910-538-494	A312 CAP FIXED PAPER: 196P68291S4 (56289)		EA	1				*	*	2	13	9	21	12 (1A8C5)
P-H	3040-946-295	A313 CLAMP GEAR: C57 (57533)		EA	3				*	2	2	33	9	21	35, 46
K2-H	6625-083-733	A314 CLAMP SYNCRO: A1183-1 (08242)		EA	9									21	42
P-H	6605-247-019	A315 COVER, HEADING INDICATOR: 2555554 (07187)		EA	1				*	*	*	10	2	21	3
P-H	5999-220-523	A316 ELEC COMP ASSY: 2580795 (07187)		EA	1				*	*	*	10	3	21	21 (1A8)
P-H	5910-850-083	A317 CAP FIXED ELECT: SAME AS A195		EA	3				REF	REF	REF	REF	REF	21	18 (1A8C1, 1A8C2, 1A8C3)

SECTION V. REPAIR PARTS FOR DIRECT SUPPORT, GENERAL SUPPORT, AND DEPOT MAINTENANCE (CONTINUED)

(1) SMR CODE	(2) FEDERAL STOCK NUMBER	(3) DESCRIPTION REFERENCE NUMBER & MFR. CODE	USABLE ON CODE	(4) UNIT OF MEAS	(5) QTY INC IN UNIT	(6) 30-DAY DS MAINT ALLOWANCE (a) 1-20	(b) 21-50	(c) 51-100	(7) 30-DAY GS MAINT ALLOWANCE (a) 1-20	(b) 21-50	(c) 51-100	(8) 1 YR ALW PER EQUIP CNTGCY	(9) DEPOT MAINT ALW PER 100 EQUIP	(10) ILLUSTRATIONS (a) FIG NO.	(b) ITEM NO. OR REFERENCE DESIGNATION
P-H	5910-617-3246	A318 CAP FIXED PAPER: CP09A1KC333K3 (81349)		EA	1				*	*	2	13	8	21	20 (1A8C4)
P-H	5910-912-9344	A319 CAP FXD PLSTC: DE4-124D (99515)		EA	1				*	*	2	13	3	21	21 (1A8C7)
P-H	5910-913-1073	A320 CAP FXD PLSTC: WPR184-J (96733)		EA	1				*	*	2	13	3	21	19 (1A8C6)
M-H		A321 TERMINAL BOARD: 2587952 (07187)		EA	1									21	23
K2-H	6615-345-3530	A322 NUT PLAIN CLINCH: 048-13 (56232)		EA	1									21	29
K2-H	5310-861-9282	A323 NUT SELFLOCKING PLATE : F22LHA27M22-40 (72962)		EA	1									21	27
K2-H	5310-820-7154	A324 NUT SELFLOCKING: F22LHA27M22-62 (72962)		EA	4									21	28
P-H	5910-648-8521	A325 RETAINER CAPACITOR: 730432-13 (56232)		EA	3				2	3	5	89	7	21	25
K1-H		A326 RIVET UNIVHD: AL1-16X5-32 (42838)		EA	10									21	26
K1-H		A327 RIVET TUBULAR: SAME AS A152		EA	6									21	24
P-H	940-990-1658	A328 TERMINAL STUD: 5675B (06540)		EA	1				*	2	2	33	2	21	30
P-H	940-929-583	A329 TERM- FEEDTHRU INSULATED: FTSM2C4P16 (98298)		EA	31				2	4	10	324	2	21	22
M-H		A330 WIRING HARNESS, BRANCHED: 2588342 (07187)		EA	1									21	
P-H	5935-812-5575	A331 RECEPTACLE ELEC: PT07A16-26P (77820)		EA	1				*	*	2	13	14	21	7 (1A8J1)
P-H	5330-455-6089	A332 GASKET: 2519188 (07187)		EA	1				*	*	2	13	23	21	11
P-H	4920-850-6493	A333 GEAR, ANTIBACKLASH, SPUR: AB650-165-125 (01351)		EA	1				*	*	2	13	4	21	59
P-H	3020-732-2880	A334 GEAR, ANTIBACKLASH, SPUR: MAB550-162CT1200P2 (01351)		EA	2				*	2	2	19	4	21	47
P-H	920-977-632	A335 GEARSHAFT, SPUR: 2556011 (07187)		EA	1				*	*	2	13	4	21	52
P-H	4920-977-636	A336 GEARSHAFT, SPUR: 2580722 (07187)		EA	1				*	*	*	10	4	21	54
P-H	4920-977-6369	A337 GEARSHAFT, SPUR: 2580724 (07187)		EA	1				*	*	*	10	4	21	55
P-H	4920-758-1143	A338 GEAR SPUR: 2555556 (07187)		EA	1				*	*	2	13	4	21	44
P-H	4920-838-1276	A339 GEAR SPUR: 2556010 (07187)		EA	1				*	*	2	13	4	21	60
P-H	4920-850-6501	A340 GEAR SPUR: 2580796 (07187)		EA	1				*	*	*	10	4	21	36

SECTION vREPAIR PARTS FOR DIRECT SUPPORT, GENERAL SUPPORT, AND DEPOT MAINTENANCE (CONTINUED)

(1) SMR CODE	(2) FEDERAL STOCK NUMBER	(3) DESCRIPTION REFERENCE NUMBER & MFR. CODE	USABLE ON CODE	(4) UNIT OF MEAS	(5) QTY INC IN UNIT	(6) 30-DAY DS MAINT ALLOWANCE (a) 1-20	(b) 21-50	(c) 51-100	(7) 30-DAY GS MAINT ALLOWANCE (a) 1-20	(b) 21-50	(c) 51-100	(8) 1 YR ALW PER EQUIP CNTGCY	(9) DEPOT MAINT ALW PER 100 EQUIP	(10) ILLUSTRATIONS (a) FIG NO.	(b) ITEM NO. OR REFERENCE DESIGNATION
›-H-S	6625-837-2416	A341 INDICATOR DIGITAL DISPLAY: 3Y40559-400RCL (18911)		EA	1				*	*	*	5	3	21	39
P-H	6105-733-3090	A342 MOTOR GENERATOR: ALGH10A48A (86197)		EA	1				*	*	2	13	3	21	45 (1A8MG1)
P-H	9905-229-6595	A343 PANEL INDICATOR: 2580723 (07187)		EA	1				*	*	*	10	3	21	9
P-H	5315-584-6422	A344 PIN SPRING: 047-0250MDP (00287)		EA	1				*	*	2	13	3	21	43
P-II	5315-514-1829	A345 PIN SPRING: 047-0375MDP (00287)		EA	1				*	*	2	13	3	21	58
P-H	6605-247-0193	A346 PLATE ASSY INDICATOR: 2587953 (07187)		EA	1				*	*	*	10	2	21	
K1-H		A347 COVER PLATE: 2580654 (07187)		EA	1									21	63
K1-H		A348 PLATE RE TAINING: 2580653 (07187)		EA	1									21	70
K2-H	5305-639-4777	A349 SCREW MACH: MS35233-27 (96906)		EA	6									21	64, 67
X2-H		A350 SPACER STEPPED: 2519352 (07187)		EA	3									21	69
X2-H	5310-722-5998	A351 WASHER FLAT: SAME AS A182		EA	6									21	66, 68
X2-H	5310-929-6395	A352 WASHER LOCK: MS35338-136 (96906)		EA	3									21	65
P-H	9905-229-6586	A353 PLATE IDENTIFICATION: 2500541-10 (07187)		EA	1				*	*	*	10	2	21	2
X2-H	5305-531-9521	A354 SCREW MACH: MS35233-3 (96906)		EA	4									21	6
X2-H	5305-543-2760	A355 SCREW MACH: MS35233-5 (96906)		EA	13									21	37, 40
K2-H	5305-639-4777	A356 SCREW MACH: SAME AS A349		EA	3									21	14
K2-H	5305-045-1628	A357 SCREW MACH: MS35233-28 (96906)		EA	3									21	4
K2-H	5305-543-2773	A358 SCREW MACH: MS35233-29 (96906)		EA	3									21	32
P-H	5305-443-5532	A359 SCREW MACH: 2587183-224 (07187)		EA	4				*	*	2	16	10	21	10
K2-H		A360 SCREW MACH: MS35209- 35 (96906)		EA	1									21	10
K2-H	6605-687-2625	A361 SPACER: B4-1 (00141)		EA	4									21	51, 53, 57
K2-H	5310-802-2359	A362 SPACER: B4-3 (00141)		EA	4									21	51, 53, 57
X2-H	5310-836-4430	A363 SPACER: B4-5 (00141)		EA	1									21	57
X2-H	5310-845-6558	A364 SPACER: B4-6 (00141)		EA	1									21	56
K2-H	531 0-582 -6300	A365 SPACER: B4-7 (00141)		EA	1									21	51

SECTION V REPAIR PARTS FOR DIRECT SUPPORT, GENERAL SUPPORT, AND DEPOT MAINTENANCE (CONTINUED)

(1) SMR CODE	(2) FEDERAL STOCK NUMBER	(3) DESCRIPTION REFERENCE NUMBER & MFR. CODE	USABLE ON CODE	(4) UNIT OF MEAS	QTY CLD UNIT	(6) 30-DAY DS MAINT ALLOWANCE (a) 1-20	(b) 21-50	(c) 51-100	30-DAY GS MAINT ALLOWANCE (a) 1-20	(b) 21-50	(c) 51-100	(8) 1 YR ALW PER EQUIP CNTGCY	(9) DEPOT MAINT ALW PER 100 EQUIP	ILLUSTRATIONS (a) FIG NO.	(b) ITEM NO. OR REFERENCE DESIGNATION
X2-H	5310-687-7738	A366 SPACER: B4-8 (00141)		EA	1									21	51
X2-H	5340-807-198	A367 SPACER: B4-11 (00141)		EA	1									21	50
X2-H		A368 SPACER POST: 2519187-1 (07187)		EA	3									21	34
P-H	5990-835-1582	A369 SYNCRO CONTROL TRANSFORMER: CTH11KS9A012 (86197)		EA	1				*	*	2	13	3	21	49 (1A8B1)
P-H	5990-781-3581	A370 SYNCRO: CTH15D5A626 (86197)		EA	1				*	*	2	13	3	21	48 (1A8B2)
X2-H	5310-928-2690	A371 WASHER LOCK: MS35338-134 (96906)		EA	17									21	7, 38, 41
X2-H	5310-929-6395	A372 WASHER LOCK: SAME AS A352		EA	9									21	5, 15, 33
X2-H		A373 WINDOW DIAL: 2580720 (07187)		EA	1									21	8
P-H	6210-989-9885	A374 INDICATOR LIGHT: 95408 -937 -100K (72619)		EA	7				*	2	2	27	10	16	6
P-H	6635-104-2193	A375 METER, NULL: HS2ZTYPEA (38315)		EA	1				*	*	*	10	2	16	15 (1M3)
P-O	5355-089-2124	A376 KNOB: S649-3LBBALLENSS (75376)		EA	4	*	2	2	2	2	2	40	8	16	18
P-O	5355-765-8230	A377 KNOB: S648-3LBBALLENSS (75376)		EA	8	2	3	5	2	2	2	89	7	16	3
P-O	6240-223-9100	A378 LAMP GLOW: SAME AS A128		EA	7	REF	REF	REF	REF	REF	REF	REF	REF	16	7 (DS1 thru 1DS7)
P-H	6625-844-6631	A379 METER, ELECTRICAL FREQUENCY: MF11-2997SP (07239)		EA	1				*	*	*	10	2	16	17 (1M2)
X1-H		A380 PANEL: 2592539 (07187)		EA	1									16	50
X2-H	5310-680-5754	A381 INSERT SCREW THREAD: S632-3C (46384)		EA	4									16	51
X2-H		A382 POST MOUNTING: 1717065 (07187)		EA	6									16	47
X2-H	6605-767-4730	A383 POST SUPPORTING: 1718792 (07187)		EA	4									16	45
P-H	5905-141-1406	A384 RESISTOR WW: 467P5700-02PCT (07088)		EA	1				*	*	2	13	12	16	31 (1R1)
P-H	5905-912-6865	A385 RES VAR WW: 3500S130-501 (80294)		EA	2				*	2	2	19	8	16	14 (1R3, 1R4)
P-H	5905-369-9298	A386 RES VAR WW: 3500S695-501 (80294)		EA	2				*	2	2	19	8	16	10 (1R6, 1R7)
P-H	5905-247-0195	A387 RES VAR, LINEAR PRECISION: 3500S695-202 (80294)		EA	1				*	*	2	13	8	16	8A (1R5)
X2-H		A388 SCREW MACH FH: SAME AS A360		EA	4									16	36
X2-H		A389 SCREW MACH FH: MS35209-49 (96906)		EA	8									16	39, 41

SECTION V REPAIR PARTS FOR DIRECT SUPPORT, GENERAL SUPPORT, AND DEPOT MAINTENANCE (CONTINUED)

(1) SMR CODE	(2) FEDERAL STOCK NUMBER	(3) DESCRIPTION REFERENCE NUMBER & MFR. CODE	USABLE ON CODE	(4) UNIT OF MEA	(5) QTY INC UNIT	(6) 30-DAY DS MAINT ALLOWANCE (a) -2	(b) 1-5	(c) 1-1	(7) 3 (a) 1-:	(b) 21-5	(c) 1-1(			(10) ILLUSTRATIONS (a) FIG NO	(b) ITEM NO. OR REFERENCE DESIGNATION
X2-H	5305-042-120	A390	SCREW MACH FH: MS35250-73 (96906)	EA	8									16	44, 48
X2-H		A391	SCREW MACH FH: 2587183-357 (07187)	EA	6									16	46
X2-H	5305-042-1205	A392	SCREW MACH FH: MS35250-71 (96906)	EA	1									16	46
P-H	5961-873-1973	A393	SEMICONDUCTOR: SAME AS A246	EA	4				RE	RE1	RE	RE	RE	16	38 (1CR1 thru 1CR4)
P-H	5905-369-9299	A394	ATTENUATOR, VARIABLE: 600- 1S21-1 (83332)	EA	1				*	*	*	10	15	16	4 (1AT7)
P-H	5905-730-4764	A395	RESISTOR, VARIABLE LINEAR PREC: 5061 (71471)	EA	1				*	*	*	10	15	16	5 (1AT8)
P-H	5930-655-1582	A396	SWITCH TOGGLE : MS35059-23 (96906)	EA	3				*	2	2	46	15	16	2 (1S4 thru 1S6)
P-H	5930-615-9376	A397	SWITCH: MS35059-21 (96906)	EA	1				*	2	2	33	15	16	8 (1S3)
P-H	5930-615-7897	A398	SWITCH TOGGLE : MS35059-31 (96906)	EA	1				*	2	2	19	15	16	32 (1S11)
P-H	5930-615-7883	A399	SWITCH TOGGLE : MS25068-21 (96906)	EA	2				*	2	2	33	15	16	11 (1S1, 1S2)
P-H	5930-655-1581	A400	SWITCH TOGGLE: MS25068-23 (96906)	EA	1				*	2	2	12	15	16	20 (1S7)
P-H	5930-843-0245	A401	SWITCH ROTARY: 65054 (71471)	EA	1				*	*	2	13	15	16	42 (1S8)
P-H	5930-106-3842	A402	SWITCH ROTARY: 65059 (71471)	EA	2				*	2	2	19	15	16	13 (1AT4, 1AT5)
P-H	5930-843-0250	A403	SWITCH ROTARY: 65060 (71471)	EA	2				*	2	2	.9	15	16	12 (1AT2, 1AT3)
P-H	6605-179-1830	A404	PANEL, SUBASSEMBLY: 2500372 (07187)	EA	1				*	2	2	9	5	.6	40 (1AT1)
P-H	5930-104-1308	A405	SWITCH ROTARY: 65062 (71471)	EA	1				*	2	2	9	5	.6	43 (1AT6)
P-H	5930-939-4376	A406	SWITCH ROTARY: 1960-3C3 (91812)	EA	1				*	2	2	9	5	6	34 (1S10)
P-H	5930-939-4418	A407	SWITCH ROTARY: 1960-3C4 (91812)	EA	1				*	10	10	9	5	6	27 (1S9)
X2-H	5940-258-2124	A408	TERMINAL LUG: 151 (79963)	EA	1									6	24 (1E2)
P-H	5950-812-7259	A409	TRANSFORMER VAR POWER: 5-1160 (58474)	EA	1				*	*	2	3		6	19 (1T1)
P-H	5950-851-4221	A410	TRANSFORMER AUDIO FREQ: SAME AS A263	EA	1				E	EF	EF	EF	EF	6	26 (1T2)
P-H	6625-912-8335	A411	VOLTMETER AC: 1777729-1 (07187)	EA	1				*			0		6	6 (1M1)
X2-H	5310-655-6151	A412	WASHER LOCK: MS35335-65 (96906)	EA	1									6	23
X2-H		A413	RACK ASSY: 2587172 (07187)	EA	1									3	42

SECTION v REPAIR PARTS FOR DIRECT SUPPORT, GENERAL SUPPORT, AND DEPOT MAINTENANCE (CONTNUED)

(1) SMR CODE	(2) FEDERAL STOCK NUMBER	(3) DESCRIPTION REFERENCE NUMBER & MFR. CODE	USABLE ON CODE	(4) UNIT OF MEAS	(5) QTY CIU NIT	(6) 30-I (a) -20	(6) DS (b) I-5C	(6) NT (c) -10(	(7) 30-i (a) -20	(7) GS (b) -50	(7) NT (c) -10	(8) UNIT WEIGHT EQUIP NTGC	(9) DEPOT MAINT MAN PER 100 EQUIP	(10) ILLUSTRATIONS (a) FIG NO.	(10) (b) ITEM NO. OR REFERENCE DESIGNATION
X2-H		A414 NUT PLAIN CLINCH: 047-13 (56232)		EA	2									13	43
X2-H	5310-827-928	A415 NUT CLINCH: 79NCFMA2-40 (72962)		EA	2									13	44
2-H	5310-988-035	A416 NUT CLINCH: 79NCFMA2-82 (72962)		EA	28									13	45
P- H-S	4920-758-114	A417 REGULATOR SUPPLY: 2587148 (07187)		EA	2				*		2	16	6	13	31 (1A5, 1A6)
K2-H	3120-811-198	A418 BUSHING: 1700781 (07187)		EA	2									18	14
P-H	5910-057-474	A419 CAP FIXED ELECT: CL25BQ130SP3 (81349)		EA	2				*		2	19	8	18	8 (1A5C2, 1A6C2)
P-H	5910-701-911	A420 CAP FIXED ELECT: 29 F2222G2 (06001)		EA	2				*		2	19	8	18	7 (1A5C1, 1A6C1)
P-H	5325-834-716	A421 GROMMET RUBBER: SAME AS A154		EA	4				EF	EF	EF	EF	EF	18	16 (Z223)
K2-H	5970-769-806	A422 INSULATOR: 1717071 (07187)		EA	1									18	15
P-H	5905-141-140	A423 RES FIXED WW: RW57V112 (81349)		EA	4				*		2	40	12	18	6 (1A5R1 , 1A6R1, 1A5R2, 1A6R2)
K2-H	5305-638-065	A424 SCR MACH PAN HD: MS35233-14 (96906)		EA	2									18	10
P-H	5961-064-237	A425 SEMICOND UC TOR: 1N649 (81349)		EA	4				*		2	27	32	18	9 (1 A5CR1, 1A6CR1, 1A5CR2, 1A6CR2)
P-H	5961-752-615	A426 SEMICONDUCTOR: JAN1N3007B (81 350)		EA	2				*		2	27	16	18	5 (1A5CR3, 1A6CR3)
M-H		A427 TERMINAL BOARD: 2580290 (07187)		EA	1									18	18
P-H	5910-648-852	A428 RETAINER CAPACITOR: SAME AS A325		EA	2				EF	EF	EF	EF	EF	18	21
X1 -H		A429 RIVET TUBULAR: SAME AS A152		EA	4									18	20
P-H	5940-990-165	A430 TERMINAL STUD: SAME AS A328		EA	1				EF	EF	EF	EF	EF	18	19
P-H	5940 -068-461	A431 TERM STANDOFF: STSM8P16 (98291)		EA	7				2	1	7	15	2	18	17
P-H	5950-814-714	A432 TRANSFORMER POWER STEP UP: 435219 (07187)		EA	1				*		2	19	7	18	13 (1A5T1, 1A6T1)
X2-H	5310-595-621	A433 WASHER FLAT: MS15795-803 (96906)		EA	2									18	12
X2-H	5310-933-811	A434 WASHER LOCK: SAME AS A293		EA	2									18	11
M-		A435 WIRING HARNESS BRANCHED: 2580285 (07187)		EA	1									18	
P-H	5935-104-842	A436 CONN RECP ELEC: 14-20PGDFS (95238)		EA	2				*	*	2	13	14	18	3 (1 A5J1, 1A6J1)
X2-H	325-263-663	A437 GROMMET RUBBER: MS35489-6 (96906)		EA	1									18	4

SECTION v REPAIR PARTS FOR DIRECT SUPPORT, GENERAL SUPPORT, AND DEPOT MAINTENANCE (CONTINUED)

(1) SMR CODE	(2) FEDERAL STOCK NUMBER	(3) DESCRIPTION REFERENCE NUMBER & MFR. CODE	USABLE ON CODE	(4) UNIT OF MEAS	(5) QTY INC IN UNIT	(6) 30-DAY DS MAINT ALLOWANCE (a) 1-20	(b) 21-50	(c) 51-100	(7) 30-DAY GS MAINT ALLOWANCE (a) 1-20	(b) 21-50	(c) 51-100	(8) 1 YR ALW PER EQUIP CNTGCY	(9) DEPOT MAINT ALW PER 100 EQUIP	(10) ILLUSTRATIONS (a) FIG NO.	(b) ITEM NO. OR REFERENCE DESIGNATION
X2-H	5305-550-5001	A438 SCR MACH PAN HD: SAME AS A012		EA	2									13	33
X2-H	5305-543-2766	A439 SCR MACH PAN HD: MS35233-16 (96906)		EA	2									13	2
X2-H	5305-579-0969	A440 SCR MACH PAN HD: SAME AS A177		EA	2									13	6
X2-H	5305-813-3345	A441 SCR MACH PAN HD: MS35233-45 (96906)		EA	24									13	30, 32, 40
X2-H	5305-558-2857	A442 SCR MACH PAN HD: MS35233-48 (96906)		EA	4									13	37
X2-H	5305-543-2581	A443 SCR MACH PAN HD: MS35234-62 (96906)		EA	6									13	27
P-H	5940-068-4613	A444 TERM STANDOFF: SAME AS A431		EA	16				REF	REF	REF	REF	REF	13	41
X2-H	5310-595-6211	A445 WASHER FLAT: SAME AS A433		EA	2									13	4
X2-H	5310-722-5998	A446 WASHER FLAT: SAME AS A182		EA	2									13	8
X2-H	5310-880-5978	A447 WASHER FLAT: MS15795-807 (96906)		EA	4									13	38
X2-H	5310-933-8118	A448 WASHER LOCK: SAME AS A293		EA	4									13	3, 34
X2-H	5310-929-6395	A449 WASHER LOCK: SAME AS A352		EA	2									13	7
X2-H	5310-933-8120	A450 WASHER LOCK: MS35338-138 (96906)		EA	6									13	28
M-H		A451 WIRING HARNESS BRANCHED: 2587423 (07187)		EA	1									13	
P-H	5935-841-7256	A452 CONN RECP ELEC: 11-20SSKGD (95238)		EA	2				*	*	2	16	14	13	23 (1P3, 1P4)
P-H	5935-761-3871	A453 CONN RECP ELEC: 14-20SSKGD (95238)		EA	2				*	2	2	19	14	13	24 (1P5, 1P6)
P-H	5935-841-7265	A454 CONN RECP ELEC: 18-20SSKGD (95238)		EA	2				*	2	2	19	14	13	22 (1P1, 1P2)
M-H		A455 WIRING HARNESS BRANCHED: 2587424 (07187)		EA	1									13	
P-H	5935-998-6239	A456 CONN RECP ELEC: PT07A14-12P (77820)		EA	1				*	*	2	13	14	13	12 (1J1)
M-H		A457 WIRING HARNESS BRANCHED: 2592541 (07187)		EA	1									13	
P-H	5935-982-7836	A458 CONN PLUG ELEC: SAME AS A192		EA	1				REF	REF	REF	REF	REF	13	16 (1P7)
P-H	5935-903-3512	A459 CONN PLUG ELEC: MS3116F16-26S (96906)		EA	1				*	*	2	13	14	13	17 (1P8)
P-H	5935-893-7307	A460 CONN RECP ELEC: PT07A14-18S (77820)		EA	2				*	2	2	33	14	13	14 (1J2, 1J3)
P-H	5935-973-5409	A461 CONN RECP ELEC: PT07A14-19S (77820)		EA	1				*	*	2	13	14	13	15 (1J4)

SECTION V REPAIR PARTS FOR DIRECT SUPPORT, GENERAL SUPPORT, AND DEPOT MAINTENANCE (CONTINUED)

(1) SMR CODE	(2) FEDERAL STOCK NUMBER	(3) DESCRIPTION REFERENCE NUMBER & MFR. CODE	USABLE ON CODE	(4) UNIT OF MEAS	(5) QTY IN UNIT	(6) 30-DAY DS MAINT ALLOWANCE a) -20	b) -50	c) -10	30-DAY GS MAINT ALLOWANCE (a) -20	(b) -50	(c) -10	(8) 1 YR WPER QUIP ITGCY	(9) DEPOT MAINT WPER 100 QUIP	ILLUSTRATIONS a) FIG NO.	(b) ITEM NO. OR REFERENCE DESIGNATION
P-H	5940-920-3331	A462 FERRULE ELEC CONDUCTOR: D100 (08795)		EA	3				2	2	3	33	90	3	18
P-H	5940-872-0881	A463 FERRULE ELEC: D101 (08795)		EA	3				2	1	3	198	540	3	19
P-H	5940-923-4491	A464 FERRULE ELEC: D103 (08795)		EA	3				2	1	3	198	540	3	19A
P-H	5940-500-8721	A465 SPLICE COND: 34318 (00779)		EA	2				*	2	2	33	20	3	20 (BG1, BG2)
P-H	9905-229-6594	A466 PLATE IDENTIFICATION: 2500541-6 (07187)		EA	1				*	*	*	10	2		2
X2-H	5305-042-1207	A467 SCR MACH FH: SAME AS A390		EA	3										4
P-O	5340-880-7987	A468 CRANK ASSY HAND MX-8108/U: 2580284		EA	1	*	*	*	*	*	*	10	7		13
H-O-S	4920-089-0181	A469 FIELD TESTER, MAGNETIC COMPASS CALIBRATOR AN/AS M-344		EA	1	*	*	*	*	*	*	5	3	1	19 (5)
P-O-S	6605-782-0221	A470 CABLE ASSY SPECIAL PURPOSE, BRANCHED CX-10869/ASM-344		EA	1	*	*	*	*	*	*	10	13	11	(W4)
P-H	5970-940-9191	A471 INSULATION SLEEVING: SAME AS A100		EA	1				REF	RE	RE	RE F	REF	11	31
P-H	5970-104-4701	A472 INSULATION SLEEVING, ELECT: SAME AS A101		EA	2				REF	RE	RE	RE F	R E	11	30
P-H	5970-104-2651	A473 INSULATION SLEEVING, ELECT, SPEC: 322A012-3 (08795)		EA	1				*	*	*	10	2	11	32
P-H	5935-865-9591	A474 CONN PLUG ELEC: SAME AS A110		EA	1				REF	RE	RE	REF	REF	11	27 (W4P3)
P-H	5935-061-7371	A475 CONN PLUG ELEC: SAME AS A109		EA	1				RE F	RE	RE	REF	RE F	11	29 (W4P1)
P-H	5935-845-6761	A476 CONN PLUG ELEC: PT06A14-19P (77820)		EA	1				*	*	2	13	14	11	28 (W4P2)
X1-H		A477 CASE TEST SET CY-6494/ASM-344: ZCC128-128D (98376)		EA	1									11	33
P-H-S	6605-782-0281	A478 DETECTOR ASSY, MAGNETIC AZIMUTH DT-354/ASM-344		EA	1				*	*	*	5	3	11	
M-H	6605	A479 CABLE ASSY, SP: 2580324 (07187)		EA	1									11	
P-H	5935-542-9011	A480 CONN PLUG ELEC: SAME AS A030		EA	1				REF	RE	RE	REF	REF	11	19 (5P3)
X2-H	4920-977-6791	A481 COVER, COMPASS: 2555626 (07187)		EA	1									11	16
P-O	355-421-1711	A482 KNOB ADJ: 2519208 (07187)		EA	1	*	*	*	*	*	*	10	7	11	9
X2-H		A483 MOUNT TELESCOPE: 2555610 (07187)		EA	1									11	13
X2-H		A484 PIVOT BRACKET: 2555608 (07187)		EA	1									11	15

SECTION V REPAIR PARTS FOR DIRECT SUPPDRT, GENERAL SUPPORT, AND DEPOT MAINTENANCE (CONTINUED)

(1) SMR CODE	(2) FEDERAL STOCK NUMBER	(3) DESCRIPTION REFERENCE NUMBER & MFR. CODE	USABLE ON CODE	(4) UNIT OF MEAS	(5) QTY INC IN UNIT	(6) 30-DAY DS MAINT ALLOWANCE (a) 1-20	(b) 21-50	(c) 51-100	(7) 30-DAY GS MAINT. ALLOWANCE (a) 1-20	(b) 21-50	(c) 51-100	(8) 1 YR ALW PER EQUIP CNTGCY	(9) DEPOT MAINT ALW PER 100 EQUIP	(10) ILLUSTRATIONS (a) FIG NO.	(b) ITEM NO. OR REFERENCE DESIGNATION
P-H	9905-229-6592	A485 PLATE IDENTIFICATION: 2500534 (07187)		EA	1				*	*	*	10	2	11	5
K2-H		A486 PLATE SUPPORT: 2555606 (07187)		EA	1									11	22
P-H	6650-228-8440	A487 TELESCOPE STRAIGHT SU-45/ASM-339(V)		EA	1				*	*	*	10	2	11	8
K2-H	5305-550-9329	A488 SCR MACH PAN H: MS35229-14 (96906)		EA	1									11	10
K2-H	5305-550-9325	A489 SCR MACH PAN H: MS35229-18 (96906)		EA	2									11	6
K2-H	5305-550-9322	A490 SCR. MACH PAN H: MS35229-21 (96906)		EA	3									11	17
K2-H	5305-042-6379	A491 SCR MACH PAN H: MS35229-27 (96906)		EA	2									11	14
K2-H	5305-550-9340	A492 SCR MACH PAN H: MS35229-8 (96906)		EA	3									11	21
P-H	6605-650-6791	A493 VALVE ASSY XMTR: 736194 (07187)		EA	1				*	2	2	19	12	11	20
A-H		A494 BASE VALVE: 609709 (07187)		EA	1									22	18
A-H		A495 WASHER. NONMETALLIC: 249385 (07187)		EA	6									22	3
A-H		A496 CORE ELECTRO - MAGNETIC: 736185 (07187)		EA	1									22	
A-H		A497 CORE, ELECTRO- MAGNETIC: 871022 (07187)		EA	1									22	13 (5L4)
A-H		A498 CORE, ELECTRO- MAGNETIC: 871023 (07187)		EA	3									22	9 (5L1, 5L2, 5L3)
A-H		A499 NUT HEXAGON: BRS2-48 (73439)		EA	2									22	10
A-H		A500 SPIDER XMTR: 232698 (07187)		EA	2									22	11
A-H		A501 SPIDER CORE XMTR: 232699 (07187)		EA	2									22	12
A-H		A502 NUT HEXAGON: 130630 (56232)		EA	9									22	2
A-H		A503 PLATE INSULATOR: 327302 (07187)		EA	3									22	14
A-H		A504 PLATE INSULATOR: 327303 (07187)		EA	3									22	5
A-H		A505 PLATE VALVE: 232689 (07187)		EA	30									22	7
A-H		A506 RING, EXTERNALLY, THREADED: 871020 (07187)		EA	1									22	16
A-H		A507 RING: 232688 (07187)		EA	1									22	6
A-H		A508 SPACER RING SEGMENT: 327305 (07187)		EA	6									22	15

SECTION v REPAIR PARTS FOR DIRECT SUPPORT, GENERAL SUPPORT, AND DEPOT MAINTENANCE (CONTINUED)

(1) SMR CODE	(2) FEDERAL STOCK NUMBER	(3) DESCRIPTION REFERENCE NUMBER & MFR. CODE	USABLE ON CODE	(4) UNIT OF MEAS	(5) QTY NCI UNIT	(6) 31 (a) -2	(6) (b) 1-5	(6) INT (c) 1-1	(7) 30- (a) 1-20	(7) (b) 21-5	(7) INT (c) -1	(8)	(8)	(10) ILLUSTRATIONS (a) FIG NO	(b) ITEM NO. OR REFERENCE DESIGNATION
A-H		A509 STRAP RETAINING: 232687 (07187)		EA	3									22	4
A-H		A510 STUD PLAIN: 327304 (07187)		EA	6									22	17
X2-H	5310-939-106	A511 WASHER LOCK: SAME AS A067		EA	3									11	7, 11
P-H	5310-103-064	A512 WASHER SPRING TENSION: SP1102 (11427)		EA	1				*	2	2	10	8	11	12
X1-H		A513 PANEL TEST, ELECTRICAL SB-3198/ASM-344: 2587955 (07187)		EA	1									11	23
P-H	6615-421-175	A514 ADAPTER, ELECTRICAL: 2555607 (07187)		EA	1				*	*	*	10	12	14	10
P-H	6605-247-019	A515 BRACKET, SHIELD ASSY: 2555332 (07187)		EA	1				*	*	*	10	9	14	14
P-H	5340-226-502	A516 HANDLE BOW: 5548 (06540)		EA	2				*	*	2	16	9	14	43
P-H	5935-539-204	A517 JACK TIP: MS16108-2C (96906)		EA	1				*	*	2	13	3	14	37 (5J3)
P-H	5935-687-109	A518 JACK TIP: MS16108 -3C (96906)		EA	1				*	*	2	13	3	14	38 (5J4)
P-O	5355-765-823	A519 KNOB: SAME AS A377		EA	3	E	E	E	E	E	E	E	E	14	5
K2-H		A520 LEAD ASSY ELEC: 2580883 (07187)		EA	1									14	
K2-H	31 0-061-886	A521 NUT SELFLOCKING: 79NM62 (72962)		EA	2									14	13
K2-H	5310-982-681	A522 NUT SELFLOCKING: 79NM82 (72962)		EA	2									14	31
K2-H		A523 PANEL BLANK: 2587948 (07187)		EA	1									14	44
P-H	5905-195-676	A524 RES FIXED COMP: SAME AS A172		EA	1				E	E	E	E	E	14	35 (5R2)
P-H	5905-279-350	A525 RES FIXED COMP: RC20GF183J (81349)		EA	1				*	*	2	13	7	14	34 (5R4)
P-H	5905-171-198	A526 RES FIXED COMP: RC20GF563J (81349)		EA	1				*	*	2	13	7	14	33 (5R5)
P-H	5905-879-824	A527 RESISTOR FXD WW: RW21V270 (81349)		EA	1				*	*	2	13	12	14	32 (5R3)
P-H	5905-946-949	A528 RESISTOR VAR: 0149 (44655)		EA	1				*	*	2	13	3	14	11 (5R1)
K2-H		A529 SCREW MACH FH: MS35209-11 (96906)		EA	2									14	9
K2-H		A530 SCREW MACH FH: 2587183-225 (07187)		EA	2									14	12
K2-H	5305-059-800	A531 SCREW MACH FH: MS35209-36 (96906)		EA	1									14	12
K2-H	5305-558-285	A532 SCR MACH PAN H: SAME AS A442		EA	2									14	30
K2-H	5305-543-435	A533 SCR MACH PAN H: MS35234-63 (96906)		EA	4									14	40

SECTION v REPAIR PARTS FOR DIRECT SUPPORT, GENERAL SUPPORT, AND DEPOT MAINTENANCE (CONTINUED)

(1) SMR CODE	(2) FEDERAL STOCK NUMBER	DESCRIPTION REFERENCE NUMBER & MFR. CODE	USABLE ON CODE	(4) UNIT OF MEAS	(5) QTY INCL IN UNIT	(6) 30-DAY DS ALLOWAN (a) -20	(b) 1-50	INT (c) 1-10	30- (a) 1-20	GS OWAI (b) 1-5	NT (c) -10	(8) 1 YR WPE QUI ITGC	(9) EPOT AINT WPE 100 QUIP	ILLUSTRATIONS (a) FIG NO.	(b) ITEM NO. OR REFERENCE DESIGNATION
A-H		A534 SHIELD CAN ASSY: 2587166 (07187)		EA	1									14	14 (5Z1)
K2-1		A535 BRACKET: 2555609 (07187)		EA	1									14	25
K2-1		A536 CABLE ASSY: 2580323 (07187)		EA	1									14	20
K2-1	310-208-53	A537 NUT PLAIN HEX: MS35649-25 (96906)		EA	3									14	24
K2-1		A538 SCR MACH PAN H: MS35229- 10 (96906)		EA	3									14	22
K2-1	920-977-67	A539 SHIELD BASE: 2503376-1 (07187)		EA	1									14	26
K2-1	525-908-08	A540 SHIELD, MAGNETIC: 2503376-3 (07187)		EA	1									14	29
K2-1	920-977-68	A541 SHIELD COVER: 2503376-2 (07187)		EA	1									14	18
K2-1	525-908-08	A542 SHIELD, MAGNETIC: 2503376-4 (07187)		EA	1									14	16
K2-1		A543 SNUBBER LARGE: 2519206 (07187)		EA	1									14	19
K2-1		A544 SNUBBER SMALL: 2519205 (07187)		EA	2									14	17
K2-1		A545 SPACER: 2519204 (07187)		EA	1									14	28
P-H	305-650-67	A546 VALVE ASSY XMTR: SAME AS A493		EA	1				REF	EF	EF	EF	EF	14	21
A-H		A547 BASE VALVE: SAME AS A494		EA	1									22	18
A-H		A548 WASHER, NONMETALLIC: SAME AS A495		EA	6									22	3
A-H		A549 CORE, ELECTRO-MAGNETIC: SAME AS A496		EA	1									22	
A-H		A550 CORE, ELECTRO-MAGNETIC: SAME AS A497		EA	1									22	13 (5Z1L4)
A-H		A551 CORE, ELECTRO-MAGNETIC: SAME AS A498		EA	3									22	9 (5Z1L1, 5Z1L2, 5Z1L3)
A-H		A552 NUT HEXAGON: SAME AS A499		EA	2									22	10
A-H		A553 SPIDER XMTR: SAME AS A500		EA	2									22	11
A-H		A554 SPIDER XMTR: SAME AS A501		EA	2									22	12
A-H		A555 NUT HEXAGON: SAME AS A502		EA	9									22	2
A-H		A556 PLATE INSULATOR: SAME AS A503		EA	3									22	14
A-H		A557 PLATE INSULATOR: SAME AS A504		EA	3									22	5

SECTION v REPAIR PARTS FOR DIRECT SUPPORT, GENERAL SUPPORT, AND DEPOT MAINTENANCE (CONTINUED)

(1) SMR CODE	(2) FEDERAL STOCK NUMBER	(3) DESCRIPTION REFERENCE NUMBER & MFR. CODE	USABLE ON CODE	(4) UNIT OF MEAS	(5) QTY IN UNIT	30-DAY DS MAINT ALLOWANCE (a) 1-20	(b) 1-5	(c) -10	(7) 30-DAY GS ALLOWANCE (a) -20	(b) 1-5	(c) 1-10	(8)	(9)	(10) ILLUSTRATIONS (a) FIG NO.	(b) ITEM NO. OR REFERENCE DESIGNATION
A-H		A558 PLATE VALVE: SAME AS A505		EA	30									22	7
A-H		A559 RING, EXTERNALLY, THREADED: SAME AS A506		EA	1									22	16
A-H		A560 RING: SAME AS A507		EA	1									22	6
A-H		A561 SPACER RING SEGMENT: SAME AS A508		EA	6									22	15
A-H		A562 STRAP RETAINING: SAME AS A509		EA	3									22	4
A-H		A563 STUD PLAIN: SAME AS A510		EA	6									22	17
P-H	5930-939-4376	A564 SWITCH ROTARY: SAME AS A406		EA	1				REF	REF	REF	REF	REF	14	6 (5S2)
P-H	5930-843-0276	A565 SWITCH ROTARY: 1960-3C5 (91812)		EA	1				*	2	2	19	14	14	7 (5S1)
P-H	5930-615-9376	A566 SWITCH TOGGLE: SAME AS A397		EA	1				REF	REF	REF	REF	REF	14	8 (5S3)
M-H		A567 TERMINAL BOARD: 2580298 (07187)		EA	1									14	42
P-H	5940-901-1405	A568 TERMINAL, STUD: SAME AS A260		EA	5				REF	REF	REF	REF	REF	14	39
X2-H	5310-933-8120	A569 WASHER LOCK: SAME AS A450		EA	4									14	41
M-H		A570 WIRING HARNESS, BRANCHED: 2588057 (07187)		EA	1									14	
P-H	5935-893-7307	A571 CONN RECP ELEC: SAME AS A460		EA	1				REF	REF	REF	REF	REF	14	3 (5J1)
P-H	5935-904-0042	A572 CONN RECP ELEC: SAME AS A022		EA	1				REF	REF	REF	REF	REF	14	4 (5J2)
P-H	9905-178-5840	A573 PLATE IDENTIFICATION: 2500541-5 (07187)		EA	1				*	*	*	5	2	11	2
X2-H	5305-543-4357	A574 SCR MACH PAN H: SAME AS A533		EA	4									11	24
X2-H	5305-835-1680	A575 SCREW THUMB: 2519201 (07187)		EA	3									11	4
X2-H	5310-543-5933	A576 WASHER LOCK: MS35333-73 (96906)		EA	4									11	25
P-H-S	6605-782-0276	A577 MONITOR MAGNETIC FIELD OQ- 31/ASM-339(V)		EA	1				*	*	*	10	3	1	17 (3)
A-H		A578 CASE TEST EQUIPMENT CY-6482/ASM-339 (V): ZCC192288CD3138 (98376)		EA	1									9	20
P-H	6605-872-2073	A579 COVER, PROTECTIVE, INSTRUMENT CW- 999/ASM- 339(V)		EA	1				*	*	*	10	2	9	3
H-S		A580 MONITOR ASSEMBLY MX-8113/ASM-339(V) 2591847 (07187)		EA	1									9	
KI-H		A581 FIE LD MONITOR: 16490 (06995)		EA	1									9	10

SECTION V REPAIR PARTS FOR DIRECT SUPPORT, GENERAL SUPPORT, AND DEPOT MAINTENANCE (CONTINUED)

(1) SMR CODE	(2) FEDERAL STOCK NUMBER	(3) DESCRIPTION REFERENCE NUMBER & MFR. CODE	USABLE ON CODE	(4) UNIT OF MEAS	5) QTY INCL IN UNIT	(6) 30-DAY DS MAINT ALLOWANCE (a) -20	(b) -50	(c) -10	30-D (a) -20	GS WAN (b) -50	NT (c) -10	8) YR PER QUIP TGCY	9) SPOT MAINT PER 00 QUIP	(10) ILLUSTRATIONS (a) FIG NO.	(b) ITEM NO. OR REFERENCE DESIGNATION
X1-H		A582 CONN ADAPTER: A16118 (06995)		EA	1									9	17
P-H	5935-683-602	A583 CONN RECP ELEC: PT02A14-18P (77820)		EA	1				*		2	9	4	9	18 (3J1)
X1-H		A584 COVER: 16120 (06995)		EA	1									9	14
P-O	5305-868-192	A585 KNOB CLAMP: A9091 (06995)		EA	1	*	2	2	*		2	9		9	15
P-O	4920-759-626	A586 TANGENT SCREW: A9078 (06995)		EA	1	*	2	2	*		2	13		9	12
P-O	4920-957-690	A587 CAP, OBJECTIVE: 16284 (06995)		EA	1	*	*	2	*		2	3	3	9	11
P-H	4920-758-115	A588 LEVEL ASSY TURN-TABLE: 9603 (06995)		EA	2				*		2	10	24	9	19
X1-H		A589 MOUNTING BASE: B16025 (06995)		EA	1									9	16
P-H	6605-198-594	A590 SHADE, HORIZONTAL SCALE: 9229 (06995)		EA	1				*		*	10	2	9	13
M-H		A591 LEAD SET ELEC: 2592547 (07187)		EA	1									9	
X1-H		A592 MOUNT VALVE PLATE ASSY: 2592591 (07187)		EA	1									9	6
X1-H		A593 MOUNT: 2592578 (07187)		EA	1									23	24
P-H	5905-120-902	A594 RESISTOR VAR, NONLINEAR: 2500382-7 (07187)		EA	1				*		2	13	3	23	22 (3R1)
X2-H		A595 SCR MACH FIL H: BRS1-72X5-16 (77250)		EA	1									23	20
X2-H	5305-813-427	A596 SCR MACH FIL H: BRS3-56X3-4 (77250)		EA	3									23	2
P-H	5940-068-461	A597 TERM STANDOFF: SAME AS A431		EA	1				REF	REF	REF	REF	REF	23	23
P-H	6605-369-927	A598 VALVE ASSY, TRANSMITTER: 2591820 (07187)		EA	1				*	*	*	10	2	23	
X1-H		A599 BASE VALVE: 2591988 (07187)		EA	1									23	19
X1-H		A600 CLIP RETAINER: 2557455 (07187)		EA	3									23	6
X1-H		A601 CORE ASSY: 2591989 (07187)		EA	1									23	
X1-H		A602 COIL ASSY: 2557458 (07187)		EA	3									23	12 3L1, 3L2, 3L3)
X1-H		A603 ELECTROMAGNET ASSY: 2557457 (07187)		EA	1									23	16 (3L4)
X1-H		A604 LEAD ELEC: 736196 (07187)		EA	1									23	

SECTION v REPAIR PARTS FOR DIRECT SUPPORT, GENERAL SUPPORT, AND DEPOT MAINTENANCE (CONTINUED)

(1) SMR CODE	(2) FEDERAL STOCK NUMBER	(3) DESCRIPTION REFERENCE NUMBER & MFR. CODE	USABLE ON CODE	(4) UNIT OF MEAS	(5) QTY NC II UNIT	(6) 30-DAY DS MAINT ALLOWANCE (a) -2C	(b) 1-5C	(c) 1-1C	30-I (a) 1-20	GS OWAN (b) 1-5C	INT (c) 1-10	(8) J YI W PE EQUI NTGC	(9) EPOT AINT W PE 100 QUIP	(10) ILLUSTRATIONS (a) FIG NO.	(b) ITEM NO. OR REFERENCE DESIGNATION
X1-E		A605 NUT PLAIN HEX: 2519386 (07187)		EA	2									23	13
A-H		A606 SPIDER XMTR: SAME AS A500		EA	2									23	14
A-H		A607 SPIDER CORE XMTR: SAME AS A501		EA	2									23	15
A-H		A608 PLATE INSULATOR: SAME AS A503		EA	3									23	10
A-H		A609 PLATE INSULATOR: SAME AS A504		EA	3									23	7
X2-E		A610 NUT SELFLOCK: BRSNO-0-80 (56878)		EA	6									23	5
X1-E		A611 PLATE VALVE: 2557456 (07187)		EA	6									23	9
X1-E		A612 PLATE V COMPR: 2557452 (07187)		EA	3									23	8
X2-E		A613 SE TSCREW: 2519374-6 (07187)		EA	1									23	18
X2-E		A614 WASHER FLAT BRS: 0187-2 (07187)		EA	1									23	21
P-H	310-812-565	A615 WASHER: 0197-2 (07187)		EA	3				*	2	2	46	3	23	3
P-H	905-229-659	A616 PLATE IDENTIFICATION: 2500541-4 (07187)		EA	1				*	2	2	19	5	9	5
P-H	905-229-658	A617 PLATE IDENTIFICATION: 2500541-8 (07187)		EA	1				*	2	2	19	5	9	2
P-H	905-229-658	A618 PLATE IDENTIFICATION: 2500535 (07187)		EA	1				*	2	2	19	5	1	2
H-O	305-782-022	A621 POWER SUPPLY PP-6056/ASM-339(V)		EA	1	*	*	*	*	*	*	5	3	1	14 (8)
M-H		A622 CABLE ASSY, POWER ELECT: 2581041 (07187)		EA	1									6	
P-H	935-259-201	A623 ADAPTER: AN3057-6B (88044)		EA	1				*	*	2	13	12	6	18
P-H	5935 -148 -937	A624 CONN PLUG ELEC: MS3106A14S7SC (96906)		EA	1				*	*	2	13	14	6	19 (8 P801)
X1-H		A625 CHAS ELEC EQUIP: 2588334 (07187)		EA	1									6	41
X2-H	5340-989-576	A626 INSERT SCREW THREAD: S832-2C (46384)		EA	8									6	43
P-H	5940-054-763	A627 TERM STANDOFF: TMRR12M (91663)		EA	1				*	*	2	13	2	6	42 (8E801)
X2-H	5340-205-630	A628 CLAMP LOOP: MS21919DG5 (96906)		EA	2									6	16
P-H	5935 -755 -368	A629 CONN RECP ELEC: MS3102R14S7SC (96906)		EA	1				*	*	2	13	14	6	37 (8J805)
P-H	5935-549-469	A630 CONN RECP ELEC: AN2552-3A (88044)		EA	1				*	*	*	10	14	6	29 (8J803)
P-H	5325-290-616	A631 GROMMET RUBBER: MS35489-13 (96906)		EA	1				*	2	2	19	7	6	39

SECTION V REPAIR PARTS FOR DIRECT SUPPORT, GENERAL SUPPORT, AND DEPOT MAINTENANCE (CONTINUED)

(1) SMR CODE	(2) FEDERAL STOCK NUMBER	(3) DESCRIPTION REFERENCE NUMBER & MFR. CODE	USABLE ON CODE	(4) UNIT OF MEA	(5) QTY NC UNI	(6) 3 (a) -2	(b) 1-5	(c) 1-1			(c) 1-1	(8)	(9)	(a) FI NC	(10) ILLUSTRATIONS (b) ITEM NO. OR REFERENCE DESIGNATION
P-H	5325-767-8101	A632 GROMMETT PLASTIC: G51HBBLACK (03296)		EA	1						2	19	7	6	40
P-O	5340-369-9266	A633 HANDLE, BOW: 1751904 (07187)		EA	1	*	*	2			2	13	9	6	12
P-H-S	6130-131-6340	A634 INVERTER PWR, STATIC: 2588528 (07187)		EA	1						*	4	3	6	22
X2-H	5310-934-9759	A635 NUT PLAIN HEX: MS35649-284 (96906)		EA	6									6	15, 25
X2-H	5305-812-0041	A636 SCR MACH FIL HD: CRES8-32X9-16 (70318)		EA	4									6	23
X2-H	5310-933-8119	A637 WASHER LOCK: MS35338-137 (96906)		EA	4									6	24
P-H	5910-369-9274	A638 CAP FIXED PLSTC: M7-674-1 (13934)		EA	1						2	13	3	12	25 (8C14)
P-H	910-369 -9275	A639 CAP FIXED PLSTC: M7-674-2 (13934)		EA	1						2	13	3	12	25 (8C14)
P-H	5910-369-9276	A640 CAP FIXED PLSTC: M7-674-3 (13934)		EA	1						2	13	3	12	25 (8C14)
P-H	5910-369-9277	A641 CAP FIXED PLSTC: M7-674-4 (13934)		EA	1						2	13	3	12	25 (8C14)
P-H	5910 -369 -9278	A642 CAP FIXED PLSTC: M7-674-5 (1 3934)		EA	1						2	13	3	12	25 (8C14)
P-H	5910 -369 -9279	A643 CAP FIXED PLSTC: M7-674-6 (13934)		EA	1						2	13	3	12	25 (8C14)
P-H	5910-369-9280	A644 CAP FIXED PLSTC: M7-674-7 (13934)		EA	1						2	13	3	12	25 (8C14)
M-H		A645 COVER PLATE ACCESS: 2588527 (07187)		EA	1									12	55
X1-H		A646 ELEC COMP ASSY: 2588456 (07187)		EA	1									12	22
P-H	5910-913-7135	A647 CAP FIXED ELECT: CSR13G105KM (81349)		EA	2						2	19	3	15	32 (8C12, 8C13)
P-H	5910-116-8610	A648 CAP FIXED ELECT: 137D156C2030F2 (56289)		EA	1						2	13	3	15	45 (8C2)
P-H	5910-369-9286	A649 CAP FIXED ELECT: 137D686C2030F2 (56289)		EA	1						2	.3	3	15	19 (8C6)
P-H	5910-116-8611	A650 CAP FIXED ELECT: 137D476C2050F2 (56289)		EA	1						2	3	3	15	20 (8C7)
P-H	5910-116-8612	A651 CAP FIXED ELECT: 137D826C2050T2 (56289)		EA	1						2	3	3	15	4 (8C1)
P-H	5910-781-2675	A652 CAP FIXED PLSTC: 137D187C2010F2 (56289)		EA	2						2	9	.2	15	2 (8C8, 8C9)
P-H	5910-369-9292	A653 CAP FIXED PLSTC: 137D107C2040T2 (56289)		EA	1						2	3	3	15	42 (8C3)
P-H	5910-956-3241	A654 CAP FIXED PLSTC: CTM334VAK (81349)		EA	1						2	3	3	.5	40 (8C4)
P-H	5910-835-2739	A655 CAP FIXED PLSTC: CTM154VBK (81349)		EA	1						2	3	3	.5	43 (8C5)
P-H	5910-369 -9294	A656 CAP FIXED PLSTC: ZDT4613 (12406)		EA	2						2	9	2	5	30 (8C10, 8C11)

SECTION v REPAIR PARTS FOR DIRECT SUPPORT, GENERAL SUPPORT, AND DEPOT MAINTENANCE (CONTINUED)

(1) SMR CODE	(2) FEDERAL STOCK NUMBER	(3) DESCRIPTION REFERENCE NUMBER & MFR CODE	USABLE ON CODE	(4) UNIT OF MEA	(5) QTY INCL IN UNIT	30 (a)	Y I LC (b)	INT (c)	30 (a)	GS (b)	INT (c)	(8) I YR LW PE EQUIP NTGC	(9) DEPOT MAINT ILW PE 100 EQUIP	(10) ILLUSTRATIONS (a) FIG NO	(b) ITEM NO. OR REFERENCE DESIGNATION
		57 CLIP SPRING TENSION: SAME AS A211		EA	3				REF	REF	REF	REF	REF	15	47
P-H	5961-951-5681	A658 HOLDER: TXB2P019-028 (98978)		EA	3				*	2	2	33	7	15	48
M-H		A659 LEAD ASSY ELEC: 2581224 (07187)		EA	1									15	
X2-H	5310-938-2013	A660 NUT PLAIN HEX: MS35649-224 (96906)		EA	6									15	8, 24, 35
X2-H	5310-849-6895	A661 NUT PLAIN HEX: MS35691-15 (96906)		EA	2									15	28
P-H	5905-279-3520	A662 RES FIXED COMP: RC20GF200J (81349)		EA	2				*	2	2	19	7	15	12 (8R6, 8R9)
P-H	5905-299-1541	A663 RES FIXED COMP: RC20GF151J (81349)		EA	1				*	*	2	13	7	15	17 (8R13)
P-H	5905-279-1757	A664 RES FIXED COMP: RC20GF152J (81349)		EA	1				*	*	2	13	7	15	11 (8R7)
P-H	5905-279-3507	A665 RES FIXED COMP: RC20GF162J (81349)		EA	1				*	*	2	13	7	15	18 (8R16)
P-H	5905-190-8887	A666 RES FIXED COMP: RC20GF202J (81349)		EA	1				*	*	2	13	7	15	31 (8R15)
P-H	5905-849-7677	A667 RES FIXED FILM: RN70C49R9F (81349)		EA	1				*	*	2	13	7	15	21 (8R8)
P-H	5905-901-2818	A668 RESISTOR VAR: RT22C2L500 (81349)		EA	1				*	*	2	13	8	15	10 (8R5)
P-H	5905-763-8281	A669 RESISTOR VAR: RT22C2L101 (81349)		EA	1				*	*	2	13	8	15	27 (8R10)
P-H	5905-880-0942	A670 RESISTOR VARIABLE: RT22C2L102 (81349)		EA	1				*	*	2	13	8	15	26 (8R14)
P-H	5905-837-4768	A671 RESISTOR WW: RW57V680 (81349)		EA	1				*	*	2	13	12	15	41 (8R4)
P-H	5905-686-3060	A672 RESISTOR WW: RW59V1R0 (81349)		EA	2				*	2	2	19	12	15	16 (8R11, 8R12)
P-H	5905-836-4559	A673 RESISTOR WW: RW59V750 (81349)		EA	2				*	2	2	19	12	15	44 (8R1, 8R3)
P-H	5905-060-7569	A674 RESISTOR WW: RE65G20R0 (81349)		EA	1				*	*	2	13	12	15	36 (8R2)
X2-H	5305-054-5638	A675 SCR MACH PAN H: MS51957-4 (96906)		EA	2									15	33
X2-H	5305-054-5639	A676 SCR MACH PAN H: MS51957-5 (96906)		EA	2									15	6
X2-H	5305-054-5642	A677 SCR MACH PAN H: MS51957-8 (96906)		EA	2									15	22
P-H	5961-873-1973	A678 SEMICONDUCTOR: SAME AS A246		EA	5				REF	REF	REF	REF	REF	15	13 8CR4 thru 8CR8)
P-H	5961-104-3489	A679 SEMICONDUCTOR: DZ41216D (12954)		EA	1				*	*	*	10	2	15	5 (8CR3)
P-H	5961-847-5508	A680 SEMICONDUCTOR: JAN1N3024B (81350)		EA	1				*	*	*	10	2	15	39 (8CR2)
P-H	5961-893-5939	A681 SEMICONDUCTOR: JAN1N2980B (81350)		EA	1				*	*	*	10	2	15	38 (8CR1)

SECTION V REPAIR PARTS FOR DIRECT SUPPORT, GENERAL SUPPORT, AND DEPOT MAINTENANCE (CONTINUED)

(1) SMR CODE	(2) FEDERAL STOCK NUMBER	(3) DESCRIPTION REFERENCE NUMBER & MFR. CODE	USABLE ON CODE	(4) UNIT OF MEAS	(5) QTY INC IN UNIT	30-DAY DS MAINT ALLOWANCE (a) 1-20	(b) 1-50	(c) 1-10	30- (a) 1-20	GS ALLOWAN (b) 1-6	INT (c) 1-10	(8) 1 YR LW PER EQUIP MTGCY	(9) DEPOT MAINT LW PER 100 EQUIP	(10) ILLUSTRATIONS (a) FIG NO.	(b) ITEM NO. OR REFERENCE DESIGNATION
		A682 STRAP MOUNTING: H25 (80294)		EA	2									15	9, 25
		A683 TERMINAL BOARD: 2588455 (07187)		EA	1									15	51
		A684 RETAINER CAPACITOR: SAME AS A147		EA	1				REF	REF	REF	REF	REF	15	55
		A685 RETAINER CAP: SAME AS A148		EA	3				REF	REF	REF	REF	REF	15	53
		A686 RETAINER CAPACITOR: SAME AS A325		EA	4				REF	REF	REF	REF	REF	15	54
		A687 RIVIT TUBULAR: SAME AS A152		EA	8									15	52
		A688 TERM FEEDTHRU INSOLATED: SAME AS A329		EA	31				REF	REF	REF	REF	REF	15	50
		A689 TERM FEEDTHRU INSULATED: FTSM1L2 (98291)		EA	23				2	4	8	175	2	15	49
		A690 TRANSISTOR: B3358 (13209)		EA	1				*	2	2	27	32	15	14 (8Q1)
		A691 TRANSISTOR: SDT4265 (21845)		EA	1				*	*	2	13	3	15	37 (8Q3)
		A692 TRANSISTOR: SAME AS A267		EA	3				REF	REF	REF	REF	REF	15	15 (8Q4, 8Q5, 8Q6)
		A693 TRANSISTOR: SAME AS A268		EA	2				REF	REF	REF	REF	REF	15	3 (8Q7, 8Q8)
		A694 WASHER LOCK: SAME AS A371		EA	6									15	7, 23, 34
		A695 WASHER LOCK: MS35333-75 (96906)		EA	2									15	29
		A696 HOUSING INVERTER: 2588526 (07187)		EA	1				*	*	*	5	1	12	4
		A697 HEATSINK ELEC: 2504247 (07187)		EA	1									12	10
		A698 HEAT SINK ELEC: 2504254 (07187)		EA	1									12	9
		A699 RIVET TUBULAR: MS16535-157 (96906)		EA	8									12	8
		A700 NUT PLAIN CAP: 2504253 (07187)		EA	3									12	20
		A701 PLATE IDENTIFICATION: 2504366 (07187)		EA	1				*	*	2	13	3	12	2
		A702 PLATE INSTRUCTION: 2556266 (07187)		EA	1				*	*	2	13	3	12	3
		A703 POST ELEC EQUIP: 2556347 (07187)		EA	5									12	54
		A704 POST ELEC EQUIP: 2556348 (07187)		EA	2									12	29
		A705 REACTOR: 953-0950 -400 (83003)		EA	1				*	*	2	13	3	12	44 (8L1)
		A706 REACTOR: C969 (09798)		EA	1				*	*	2	13	3	12	37 (8L3)

SECTION V REPAIR PARTS FOR DIRECT SUPPORT, GENERAL SUPPORT, AND DEPOT MAINTENANCE (CONTINUED)

(1) SMR CODE	(2) FEDERAL STOCK NUMBER	(3) DESCRIPTION REFERENCE NUMBER & MFR. CODE	USABLE ON CODE	(4) UNIT OF MEA	(5) QTY NC II UNIT	(6) 30 (a) -2C	(6) (b) 1-5	(6) (c) 1-10	(7) 30- (a) 1-20	(7)	(7) (c) -1(	(8)		(10) ILLUSTRATIONS (a) FI NO	(b) ITEM NO. OR REFERENCE DESIGNATION
P-H	5950-106-38	A707 REACTOR: C970 (09798)		EA	1				*		2	13		12	41 (8L4)
P-H	5950-106-38	A708 REACTOR: C991 (09798)		EA	1				*		2	13		12	45 (8L2)
X2-H	5305-054-56	A709 SCR MACH PAN H: SAME AS A675		EA	4									12	12
X2-H	5305-054-56	A710 SCR MACH PAN H: MS51957-12 (96906)		EA	1									12	49
X2-H	5305-054-56	A711 SCR MACH PAN H: MS51957-15 (96906)		EA	14									12	5, 23, 27, 52
X2-H	5305-054-66	A712 SCR MACH PAN H: MS51957-27 (96906)		EA	4									12	46
X2-H	5305-054-66	A713 SCR MACH PAN H: MS51957-34 (96906)		EA	2									12	34, 38
X2-H	5305-054-66	A714 SCR MACH PAN H: MS51957-36 (96906)		EA	1									12	30
X2-H	5305-054-66	A715 SCR MACH PAN H: MS51957-37 (96906)		EA	1									12	42
X2-H	5940-614-05	A716 TERMINAL LUG: MS35431-1 (96906)		EA	1									12	51
P-H	5950-106-38	A717 TRANSFORMER: C935 (09798)		EA	1				*		2	13		12	32 (8T1)
P-H	5950-106-38	A718 TRANSFORMER PWR: C934 (09798)		EA	1				*		2	13		12	36 (8T2)
P-H	5950-106-38	A719 TRANSFORMER PWR: C947-2 (09798)		EA	1				*		2	13		12	33 (8T5)
P-H	5950-106-38	A720 TRANSFORMER PWR: C929-4 (09798)		EA	1				*		2	13		12	40 (8T3)
P-H	5950-106-38	A721 TRANSFORMER PWR: C936 (09798)		EA	1				*		2	13		12	48 (8T4)
P-H	5961-865-00	A722 TRANSISTOR: SAME AS A690		EA	3				REI		tE	tEF		12	21 (8Q2, 8Q9, 8Q10)
X2-H	5310-595-67	A723 WASHER FLAT: MS15795-802 (96906)		EA	4									12	14
X2-H	5310-595-62	A724 WASHER FLAT: SAME AS A433		EA	2									12	7
X2-H	5310-928-26	A725 WASHER LOCK: SAME AS A371		EA	4									12	13
X2-H	5310-933-81	A726 WASHER LOCK: SAME AS A293		EA	15									12	, 24, 28, 50, 53
X2-H	5310-929-63	A727 WASHER LOCK: SAME AS A352		EA	8									12	1, 35, 39, 43, 47
M-H		A728 WIRING HARNESS, BRANCHED: 2588365 (07187)		EA	1									12	
P-H	5935-179-46	A729 CONN RECP ELEC: 2556310 (07187)		EA	1				*		2	13		12	
X1-H		A730 CONN RECP ELEC: MS3102R14S7P (96906)		EA	1									12	17 (8J801)
X1-H		A731 NUT CLINCH: 79NCFMA2-26 (72962)		EA	4									12	18

SECTION v REPAIR PARTS FOR DIRECT SUPPORT, GENERAL SUPPORT, AND DEPOT MAINTENANCE (CONTINUED)

(1) SMR CODE	(2) FEDERAL STOCK NUMBER	(3) DESCRIPTION REFERENCE NUMBER & MFR. CODE	USABLE ON CODE	(4) UNIT OF MEAS	(5) QTY INCL UNIT	(6) 30-DAY DS MAINT ALLOWANCE (a) 1-2	(b) 1-5	(c) 1-10	(7) 30- (a) 1-20	GS OWA (b) 1-5	INT (c) 1-10	(8) UNIT WEIGHT EQUIV NTGC	(9) EPO MAINT WPI 100 QUI	(10) ILLUSTRATIONS (a) FIG NO	(b) ITEM NO. OR REFERENCE DESIGNATION
X2-H	5940-614-0537	A732 TERMINAL LUG: SAME AS A716		EA	1									12	19 (8E1)
M-H		A733 WIRING HARNESS, BRANCHED: 2588655 (07187)		EA	1									12	
M-H		A734 LEAD ASSY ELEC: 2581042 (07187)		EA	1									6	
P-H	5940-661-0400	A735 TERMINAL LUG: 4026 (77147)		EA	3				*	2	2	33	13	6	21
X2-H	5310-934-9748	A736 NUT PLAIN HEX: MS35649-244 (96906)		EA	8									6	9, 36
X2-H	5310-934-9765	A737 NUT PLAIN HEX: MS35650-304 (96906)		EA	2									6	28
M-H		A738 PLATE BOTTOM: 1751905 (07187)		EA	1									6	2
X2-H	5340-989-5764	A739 INSERT SCREW THREAD: SAME AS A626		EA	4									6	5
P-H	9905-229-6590	A740 PLATE IDENTIFICATION: 2592940 (07187)		EA	1				*	*	2	13	3	6	6
P-H	5905-539-4580	A741 RESISTOR VARIABLE : RP101SA500KK (81 349)		EA	1				*	*	2	13	1	6	33
X2-H	5305-051-8605	A742 SCREW CAP SCH: MS16995-77 (96906)		EA	4									6	10
X2-H	5305-071-1325	A743 SCREW MACH FH: MS51960-68 (96906)		EA	2									6	26
X2-H	5305-054-5648	A744 SCR MACH PAN HD: MS51957-14 (96906)		EA	4									6	7
X2-H	5305-054-5650	A745 SCR MACH PAN HD: MS51957-16 (96906)		EA	4									6	34
X2-H	5305-054-6667	A746 SCR MACH PAN HD: MS51957-42 (96906)		EA	8									6	3
X2-H	5305-054-6668	A747 SCR MACH PAN HD: MS51957-43 (96906)		EA	6									6	13, 30
X2-H	5940-614-0537	A748 TERMINAL LUG: SAME AS A716		EA	4									6	38 (8E804)
X2-H	5310-933-8118	A749 WASHER LOCK: SAME AS A293		EA	4									6	8
X2-H	5310-933-8120	A750 WASHER LOCK: SAME AS A450		EA	2									2	27
X2-H	5310-209-1366	A751 WASHER LOCK: MS35335-58 (96906)		EA	4									6	35
X2-H	5310-543-2739	A752 WASHER LOCK: MS35333-72 (96906)		EA	14									6	4, 14, 31
X2-H	5310-180-0277	A753 WASHER LOCK: MS35333-76 (96906)		EA	4									6	11
P-H	6605-900-9099	A754 WASHER RECESSED: 1700948 (07187)		EA	4				*	2	2	40	1	6	32
H-OS		A755 REEL CABLE RL-255/U		EA	1									1	8
P-H	6605-421-1760	A756 REEL CABLE: 2587129-1 (07187)		EA	1				*	*	*	10	1	5	6

SECTION V. REPAIR PARTS FOR DIRECT SUPPORT, GENERAL SUPPORT, AND DEPOT MAINTENANCE (CONTINUED)

(1) SMR CODE	(2) FEDERAL STOCK NUMBER	(3) DESCRIPTION REFERENCE NUMBER & MFR. CODE	USABLE ON CODE	(4) UNIT OF MEAS	(5) QTY INC IN UNIT	(6) 30- a) -20	(6) DS LOWA b) -50	(6) INT c) -10	(7) 30- a) -20	(7) GS b) -5	(7) NT c) -10	(8)	(9)	(10) ILLUSTRATIONS (a) FIG NO.	(b) ITEM NO. OR REFERENCE DESIGNATION
X2-H	5305-543-281	A757 SCR MACH PAN HD: MS35233-80 (96906)		EA	6									5	3
P-H	6605-247-0190	A758 SPACER REEL: 2555581-1 (07187)		EA	3				*	2	2	33	1	5	5
P-H	5340-400-7268	A759 STRAP WEBBING: 2503586 (07187)		EA	1				*	2	2	33	27	5	2
P-H	6605-421-17554	A760 SUPPORT REEL: 2587131-1 (07187)		EA	2				*	2	2	19	.2	5	4
AH-OS		A761 REEL RACK ASSY RL-256/U: 2587139-2 (07187)		EA	1									1	10
P-H	6605-252-2341	A762 REEL CABLE: 2587129-2 (07187)		EA	1				*	*	*	10		5	6
X2-H	5305-543-2814	A763 SCR MACH PAN HD: SAME AS A757		EA	6									5	3
P-H	6605-247-0189	A764 SPACER REEL: 2555581-2 (07187)		EA	3				*	2	2	33	1	5	5
P-H	5340-400-7268	A765 STRAP WEBBING: SAME AS A759		EA	1				EF	EF	EF	EF	EF	5	2
P-H	6605-421-17553	A766 SUPPORT REEL: 2587131-2 (07187)		EA	2				*	2	2	19	.2	5	4
AH-OS		A767 REEL CABLE RL-257/U: 2587139-3 (07187)		EA	1									1	12
P-H	6605-421-1761	A768 REEL CABLE: 2587129-3 (07187)		EA	1				*	*	*	10	*	5	6
X2-H	5305-543-2814	A769 SCR MACH PAN HD: SAME AS A757		EA	6									5	3
P-H	6605-247-0188	A770 SPACER REEL: 2555581-3 (07187)		EA	3				*	2	2	33	1	5	5
P-H	5340-400-7268	A771 STRAP WEBBING: SAME AS A759		EA	1				EF	EF	EF	EF	EF	5	2
P-H	6605-421-1755	A772 SUPPORT: 2587131-3 (07187)		EA	2				*	2	2	19	12	5	4
AH-OS		A773 TRIPOD ELECT, EQUIPMENT MX-8114/U: 2587149-1 (07187)		EA	2									1	5
P-H	920-787-1623	A774 BALL JOINT ASSY: 2378007 (07187)		EA	3				2	2	3	53	108	2	4
X1-H		A775 DISK: 2518005 (07187)		EA	1									2	7
X2-H	310-903-5966	A776 NUT PLAIN HEX: MS51971-1 (96906)		EA	1									2	5
X2-H	320-117-6939	A777 RIVET SOLID: MS20426AD3-5 (96906)		EA	4									2	6
X1-H		A778 STUD BALL: 2503010 (07187)		EA	1									2	8
P-O	355-814-7236	A779 KNOB: 2503007 (07187)		EA	2	*	2	2	*	2	2	40	18	2	12
P-O	355-814-7237	A780 KNOB LEG ADJ: 2503008 (07187)		EA	3	2	2	3	2	2	2	53	7	2	9

SECTION V REPAIR PARTS FOR DIRECT SUPPORT, GENERAL SUPPORT, AND DEPOT MAINTENANCE (CONTINUED)

(1) SMR CODE	(2) FEDERAL STOCK NUMBER	(3) DESCRIPTION REFERENCE NUMBER & MFR. CODE	USABLE ON CODE	(4) UNIT OF MEA	(5) QTY INC IN UNIT	30-DAY D ALLOW (a)	(b)	INT (c)	30 (a)	GS LOWA (b)	INT (c)	(8) LY LW PR EQUIP MTGC	(9) DEPO MAIN LW P EQUI	(10) ILLUSTRATIONS (a) FIG NO	(b) ITEM NO. OR REFERENCE DESIGNATION
P-H	6605-453-5671	A781 SECTION, COURSE MONITOR, MOUNT: 2587150 (07187)		EA	3				*	2	2	40	72	2	16
P-H	5325-104-5424	A782 GROMMET RUBBER: Z2441 (76385)		EA	2				2	3	5	95	7	2	17 (Z2441)
P-H	5315-104-2999	A783 PIN, SHOULDERED, HEADED: 2518446-1 (07187)		EA	1				2	2	3	53	4	2	19
P-H	5315-104-3000	A784 PIN, SHOULDERED. HEADED: 2518446-2 (07187)		EA	2				2	3	5	95	4	2	18
P-H	6605-013-9291	A785 LEG SECTION, TRIPOD MOUNT: 2553005 (07187)		EA	3				*	2	2	40	72	2	11
X1-H		A786 MOUNT: 2578008 (07187)		EA	1									2	21
P-H	6605-247-0191	A787 PLATE RETAINING TRIPOD: 2503014 (07187)		EA	6				2	3	5	95	432	2	15
X2-H		A788 SCR MACH PAN HD: AL10-32X1-2 (07187)		EA	12									2	13
P-H	5340-104-7981	A789 STRAP WEBBING: 2553899 (07187)		EA	1				*	2	2	19	12	2	3
P-H	5315-104-2989	A790 PIN, SHOULDERED, HEADED: 2518446-3 (07187)		EA	1				*	2	2	19	4	2	2
P-H	4920-787-1621	A791 TIP POINTED: 2503009 (07187)		EA	3				2	2	3	53	108	2	10
X2-H	5310-639-0787	A792 WASHER LOCK: MS35335-74 (96906)		EA	12									2	14
H-OS	6605-782-0234	A793 TURNTABLE TRANSMITTER QQ-30/ASM-339(V)		EA	1	*	*	*	*	*	*	5	3	1	16 (4)
X1-H		A794 CASE TEST EQUIPMENT CY-6480/ASM-339 (V): ZCC192288CD3634 (98376)		EA	1										
P-H	6605-872-2073	A795 COVER, PROTECTIVE, INSTRUMENT CW-999/ASM-339(V): SAME AS A579		EA	1				REF	REF	REF	REF	REF	8	3
P-H	6605-782-0253	A796 MOUNTING PLATE, TRANSMITTER MX-8112/ASM-339(V)		EA	1				*	*	*	10	2	8	21
P-H	9905-144-6954	A797 PLATE IDENTIFICATION: 2500541-7 (07187)		EA	1				*		*	10	2	8	2
X1-H		A798 TURNTABLE ASSY, REMOTE TRANSMITTER MX-81 11/ ASM-339(V): 2581019 (07187)		EA	1									3	4
P-H	6605-244-5700	A799 PLATE FLUX VALVE : 2580974 (07187)		EA	1				*			10	2	3	7
P-H	9905-144-6984	A800 PLATE IDENT: 2500541-2 (07187)		EA	1				*			10	2	3	5
P-H	5305-764-1837	A801 SCREW THUMB: 2519202 (07187)		EA	3				*			33	27	3	6

SECTION V REPAIR PARTS FOR DIRECT SUPPORT, GENERAL SUPPORT, AND DEPOT MAINTENANCE (CONTINUED)

(1) SMR CODE	(2) FEDERAL STOCK NUMBER	(3) DESCRIPTION REFERENCE NUMBER & MFR. CODE	USABLE ON CODE	(4) UNIT OF MEAS	(5) QTY CH UNIT	(6) 30-DAY DS MAINT ALLOWANCE (a) -2C	(b) 1-5C	(c) -10	(7) 30-I (a) -20	GS OWAN (b) 1-5C	NT (c) -10	(8) 1 YR NW PER EQUIP NTGCY	(9) DEPOT MAINT WPE 100 QUIP	(10) ILLUSTRATIONS (a) FIG NO.	(b) ITEM NO. OR REFERENCE DESIGNATION
C1-E		A802 TURNTABLE: 16451 (06995)		EA	1									3	8
C1-E		A803 BASE: A16025 (06995)		EA	1									3	18
D-H	305-229-529	A804 BRACKET LEVEL MOUNTING: 9305 (06995)		EA	2				*	*	2	16	8	3	12
D-H	935-801-662	A805 CONN RECP ELEC: MS3102E14S6SC (96906)		EA	1				*	*	2	13	14	3	19 (4J2)
D-H	935-683-602	A806 CONN RECP ELEC: SAME AS A583		EA	1				REF	REF	REF	REF	REF	3	20 (4J1)
D-O	305-880-777	A807 KNOB: A29006 (06995)		EA	1	*	*	2	*	*	2	13	7	3	16
D-O	920-759-626	A808 TANGENT, SCREW: A29007 (06995)		EA	1	*	*	2	*	*	2	13	7	3	15
D-O	920-759-626	A809 TANGENT SCREW: SAME AS A586		EA	1	REF	REF	REF	REF	REF	REF	REF	REF	3	13
D-O	305-868-192	A810 KNOB, CLAMP: SAME AS A585		EA	1	REF	REF	REF	REF	REF	REF	REF	REF	3	14
D-H	920-758-115	A811 LEVEL, ASSY TURN-TABLE: SAME AS A588		EA	2				REF	REF	REF	REF	REF	B	11
M-H		A812 POST: 16064 (06995)		EA	4									B	10
D-O	305-868-192	A813 SCREW THUMB: A16067 (06995)		EA	4	2	2	2	2	2	2	40	3	B	9
C2-E		A814 STUD: A6047 (06995)		EA	4									B	17

SECTION VI SPECIAL TOOLS, TEST & SUPPORT EQUIPMENT FOR DIRECT SUPPORT, GENERAL SUPPORT & DEPOT MAINTENANCE (AN/ASM-339(V)1) 1)

(1) SMR CODE	(2) FEDERAL STOCK NUMBER	DESCRIPTION REFERENCE NUMBER & MFR. CODE	USABLE ON CODE	(4) UNIT OF MEAS	(5) QTY INC IN UNIT	(6) 30-DAY DS MAINT ALLOWANCE (a) 1-20	(b) 21-50	(c) 51-100	(7) 30-DAY GS MAINT ALLOWANCE (a) 1-20	(b) 21-50	(c) 51-100	(8) 1 YR ALW PER 100 EQUIP CNTGCY	(9) DEPOT MAINT ALW PER 100 EQUIP	(10) ILLUSTRATIONS (a) FIG NO.	(b) ITEM NO. OR REFERENCE DESIGNATION
--H		A815 VOLTMETER, PHASE ANGLE: VM202BRTS104 (07342)		EA	1	*	*	*	*	*	*	*	*	26	1
--H	6625-714-4057	A816 GALVONAMETER: 204A (05157)		EA	1	*	*	*	*	*	*	*	*	26	2
--H		A817 MAGNETOMETER, TRANSIT: 132 (26612)		EA	1	*	*	*	*	*	*	*	*	26	3
--H	6625-793-1341	A818 VOLTAGE STANDARD, DC: 301 (05157)		EA	1	*	*	*	*	*	*	*	*	26	4
--H		A819 MEGOHMMETER: 1620C (73386)		EA	1	*	*	*	*	*	*	*	*	26	5
--H	6130-043-2321	A820 POWER SUPPLY, DC: TUR040- 30 (94660)		EA	1	*	*	*	*	*	*	*	*	26	6
--H	6625-936-6294	A821 VOLTMETER, DIFFERENTIAL, AC/DC: 873A (89536)		EA	1	*	*	*	*	*	*	*	*	26	7
--H		A822 VOLTMETER, DIGITAL: 5500-130 (03155)		EA	1	*	*	*	*	*	*	*	*	26	8
--H		A823 POWER SUPPLY, DC: 6116A (28480)		EA	2	*	*	*	*	*	*	*	*	26	9
--H	5915-863-8818	A824 PHASE SHIFTER: PG1AT (08242)		EA	1	*	*	*	*	*	*	*	*	26	10
--H	6625 -058 -8698	A825 POWER SUPPLY, DC: 6224A (28480)		EA	2	*	*	*	*	*	*	*	*	26	11
--H		A826 HELMHOLTZ CAGE: T307829 (07187)		EA	1	*	*	*	*	*	*	*	*	26	12
--H		A827 READOUT, HEADING: T321463 (07187)		EA	1	*	*	*	*	*	*	*	*	26	13
--H		A828 SIMULATOR, GYRO AND COMPASS SIGNAL: SM486/ASN (97424)		EA	1	*	*	*	*	*	*	*	*	26	14
--H		A829 TEST FIXTURE, FLUX VALVE CALIBRATION: T321424 (07187)		EA	1	*	*	*	*	*	*	*	*	26	15
--H		A830 BOARD, BREAKOUT: NO NUMBER (07187)		EA	1	*	*	*	*	*	*	*	*	26	
--H		A831 TEST FIXTURE, SELECTOR, HEADING: (07187)		EA	1	*	*	*	*	*	*	*	*	26	

SECTION VII INDEX-FEDERAL STOCK NUMBER CROSS REFERENCE

TO FIGURE AND ITEM NUMBER OR REFERENCE DESIGNATION AN/ASM-339(V)1)

FEDERAL STOCK NUMBER	FIGURE NUMBER	ITEM NUMBER OR REF. DESIGNATION
3020-732-2880	21	47
3040-220-5235	10	53
3040-220-5236	17	22
3040-220-5238	17	21
3040-946-2952	21	35
3040-946-2952	21	36
3110-588-7350	21	61
3120-811-1982	18	14
4920-089-0186	1	19
		(5)
4920-114-0040	16	11A
4920-758-1143	21	44
4920 -758-1147	17	10
4920-758-1149	13	31
		(1A5)
4920-758-1149	13	31
		(1A6)
4920-758-1150	8	11
4920-758-1150	9	19
4920-759-6266	9	12
4920-759-6266	8	13
4920-759-6267	8	15
4920-761-2420	13	29
		(1A3)
4920-761-2420	13	29
		(1A4)
4920-761-2421	13	39
		(1A1)
4920-761-2421	13	39
		(1A2)
4920 -787-1621	2	10
4920-787-1623	2	4
4920-838-1276	21	60
4920-850-6498	21	59
4920-850-6501	21	36
4920-929-6154	10	51A
4920-929-6156	10	51G
4920-957-6903	9	11
4920-977-6325	21	52
4920-977-6367	21	54
4920-977-6369	21	55
4920-977-6409	13	36
		(1A7)
4920-977-6790	11	16
4920-977-6791	14	26
4920-977-6834	14	18
4920-997-6529	10	51D
4920-997-6530	10	51C
5120-106-0116		68
5120-106-2462	10	69
5120-198-5401	10	67
5120-248-1178	10	71
5210-900-0048	10	70
5305-022-7310	10	11
5305-042-1205	16	46
5305-042-1207	7	4
5305-042-1207	16	48
5305-042-6379	11	14
5305-045-1628	21	4
5305-051-8605	6	10
5305-054-5638		12
5305-054-5638	15	33
5305-054-5639	15	
5305-054-5642	15	22
5305-054-5646	12	49
5305-054-5648	6	7
5305-054-5649	12	5
5305-054-5649	12	23
5305-054-5649	12	27
5305-054-5649	12	52
5305-054-5650	6	34
5305-054-6651	12	46
5305-054-6658	12	34
5305-054-6658	12	38
5305-054-6660	12	30
5305-054-6661	12	42
5305-054-6667	6	3
5305-054-6668	6	13
5305-054-6668	6	30
5305-059-8002	14	12
5305-059-8019	10	57
5305-059-8019	10	63
5305-071-1325	6	26
5305 -274-0529	17	3
5305-443-5530	10	51B
5305-443-5531	10	51E
5305-443-5532	21	10
5305-531-9520	20	2
5305-531-9520	20	37
5305-531-9521	21	6
5305-543-2581	13	27
5305-543-2760	21	37
5305-543-2760	21	40
5305-543-2766	13	2
5305-543-2773	21	32
5305-543-2777	19	23
5305-543-2814	5	3
5305-543-4357	11	24
5305-543-4357	14	40
5305-550-5001	3	16
5305-550-5001	13	33
5305-550-5002	3	4
5305-550-5002	3	12
5305-550-5002	19	40
5305-550-9322	11	17
5305-550-9325	11	6
5305-550-9329	11	10
5305-550-9340	11	21
5305-558-2857	14	30
5305-558-2857	13	37
5305-579-0969	20	6
5305-579-0969	13	6
5305-638-0653	18	10
5305-639-4777	21	14
5305-639-4777	21	64
5305-639-4777	21	67
5305-764-1837	8	6
5305-764-3013	10	56
5305-790-8557	10	52
5305-801-3166	10	45
5305-803-8232	17	5
5305-812-0041	6	23
5305-813-3345	13	30
5305-813-3345	13	32

SECTION VII INDEX-FEDERAL STOCK NUMBER CROSS REFERENCE TO FIGURE AND ITEM NUMBER OR REFERENCE DESIGNATION (AN/ASM-339(V)1

FEDERAL STOCK NUMBER	FIGURE NUMBER	ITEM NUMBER OR REF. DESIGNATION
5305-813-3345	13	40
5305-813-4277	23	2
5305-835-1680	11	4
5305-836-1029	10	6
5305-868-1925	8	9
5305-868-1926	8	14
5305-868-1926	9	15
5305-880-7772	8	16
5306-816-8057	10	62
5310-022-1117	10	9
5310-022-1117	10	12
5310-022-1117	10	17
5310-022-1117	10	32
5310-022-1117	10	34
5310-022-1117	10	47
5310-058-3599	3	13
5310-061-8867	13	14
5310-103-0645	11	12
5310-178-8631	15	29
5310-180-0277	6	11
5310-208-5335	14	24
5310-209-1366	6	35
5310-262-5997	19	27
5310-367-9198	17	12
5310-543-2739	6	4
5310-543-2739	6	14
5310-543-2739	6	31
5310-543-4652	20	38
5310-543-5933	11	25
5310-550-2715	3	5
5310-550-3715	3	17
5310-582-6300	21	51
5310-595-6211	13	4
5310-595-6211	12	7
5310-595-6211	18	12
5310-595-6761	12	14
5310-619-1148	20	9
5310-619-1148	19	24
5310-639-0787	2	14
5310-655-6151	16	23
5310-680-5754	16	51
5310-687-7738	21	51
5310-722-5998	20	7
5310-722-5998	13	8
5310-722-5998	21	66
5310-722-5998	21	68
5310-801-8544	20	60
5310-801-8550	20	59
5310-802-2359	21	51
5310-802-2359	21	53
5310-802-2359	21	57
5310-812-5654	23	3
5310-815-8064	3	22
5310-820-7154	21	28
5310-827-9286	13	44
5310-836-4430	21	57
5310-845-6558	21	56
5310-849-6895	15	28
5310-861-9282	21	27
5310-880-5978	13	38
5310-903-5966	2	5
5310-928-2690	15	7
5310-928-2690	21	7
5310-928-2690	12	13
5310-928-2690	15	23
5310-928-2690	15	34
5310-928-2690	21	38
5310-928-2690	21	41
5310-929-6395	21	5
5310-929-6395	13	7
5310-929-6395	21	15
5310-929-6395	12	31
5310-929-6395	21	33
5310-929-6395	12	35
5310-929-6395	12	39
5310-929-6395	12	43
5310-929-6395	12	47
5310-929-6395	21	65
5310-933-8118	13	3
5310-933-8118	17	4
5310-933-8118	12	6
5310-933-8118	6	8
5310-933-8118	18	11
5310-933-8118	12	24
5310-933-8118	12	28
5310-933-8118	13	34
5310-933-8118	12	50
5310-933-8118	12	53
5310-933-8119	6	24
5310-933-8120	2	27
5310-933-8120	13	28
5310-933-8120	14	41
5310-934-9748	6	9
5310-934-9748	6	36
5310-934-9759	6	15
5310-934-9759	6	25
5310-934-9765	6	28
5310-938-2013	15	8
5310-938-2013	15	24
5310-938-2013	15	35
5310-939-1061	10	7
5310-939-1061	11	7
5310-939-1061	11	11
5310-982-6814	14	31
5310-988-0358	13	45
5315-104-2989	2	2
5315-104-2999	2	19
5315-104-3000	2	18
5315-514-1829	21	58
5315-584-6422	21	43
5320-117-6939	2	6
5320-233-4781	20	52
5320-850-2272	12	8
5325-104-5424	2	17 (Z2441)
5325-263-6632	18	3 (1A6J1)
5325-290-6163	6	39
5325-767-8101	6	40
5325-834-7160	18	16 (Z223)
5325-834-7160	17	19
5325-834-7160	20	49
5330-455-6089	21	11

SECTION VII INDEX-FEDERAL STOCK NUMBER CROSS REFERENCE TO FIGURE AND ITEM NUMBER OR REFERENCE DESIGNATION

AN/ASM-339 (V)1

FEDERAL STOCK NUMBER	FIGURE	ITEM NUMBER OR REF. DESIGNATION
5340-089-0669	16	30
5340-104-7981	2	3
5340-205-6302	6	16
5340-226-5022	14	43
5340-369-9266	6	12
5340-400-7268	5	2
5340-435-2598	10	19
5340-680-4562	13	9
5340-721-7384	20	8
5340-721-7384	19	25
5340-725-6033	19	83
5340-732-2883	19	26
5340-803-5003	20	58
5340-807-1986	21	50
5340-816-2047	17	9
5340-880-7987	1	13
5340-914-9030	3	21
5340-989-5764	6	5
5340-989-5764	6	43
5355-089-2124	16	18
5355-421-1712	11	9
5355-765-8230	16	3
5355-765-8230	14	5
5355-814-7236	2	12
5355-814-7237	2	9
5355-852-0527	16	9
5905-060-7569	15	36 (8R2)
5905-120-9022	23	22 (3R1)
5905-141-1406	6	31 (1R1)
5905-141-1407	8	6 (1A5R1)
5905-141-1407	8	6 (1A5R2)
5905-141-1407	8	6 (1A6R1)
5905-141-1407	18	6 (1A6R2)
5905-171-1986	14	33 (5R5)
5905-185-8510	20	31 (1A1R16)
5905-185-8510	20	31 (1A1R21)
5905-185-8510	20	31 (1A2R16)
5905-185-8510	20	31 (1A2R21)
5905-190-8883	19	43 (1 A7R20)
5905-190-8887	15	31 (8R15)
5905-195-6806	20	21 (1A1R5)
5905-195-6806	20	21 (1A2R5)
5905-195-6761	20	28 (1A1R14)
5905-195-6761	20	28 (1A2R14)
5905-195-6761	14	35 (5R2)
5905 -247-0195		8A (1R5)
5905-279-1757	15	11 (8R7)
5905-279-1879	20	13 (1A1R1)
5905-279-1879	20	13 (1 A1R2)
5905-279-1879	20	13 (1 A2R1)
5905 -279 -1879	20	13 (1 A2R2)
5905-279-1885	20	18 (1A1R8)
5905-279-1885	20	18 (1A2R8)
5905-279-2019	20	29 (1A1R15)
5905-279-2019	20	29 (1 A1R19)
5905-279-2019	20	29 (1A1R20)
5905-279-2019	20	29 (1 A1R22)
5905-279-2019	20	29 (1 A2R15)
5905-279-2019	20	29 (1 A2R19)
5905-279-2019	20	29 (1 A2R20)
5905-279-2019	20	29 (1A2R22)
5905-279-3500	14	34 (5R4)
5905-279-3504	20	33 (1 A1R25)
5905-279-3504	20	33 (1 A2R25)
5905-279-3505	20	30 (1A1R18)
5905-279-3505	20	30 (1A1R24)
5905 -279-3505	20	30 (1A2R18)
5905-279-3505	20	30 (1A2R24)
5905-279-3507	15	18 (8R16)
5905-279-3511	20	12 (1A1R9)
5905-279-3511	20	12 (1A2R9)
5905-279-3514	20	19 (1A1R6)
5905-279-3514	20	19 (1A2R6)
5905-279-3517	20	32 (1A1R17)
5905-279-3517	20	32 (1 A2R17)

SECTION VII INDEX-FEDERAL STOCK NUMBER CROSS REFERENCE TO FIGURE AND ITEM NUMBER OR REFERENCE DESIGNATION AN/ASM-339(V)1

FEDERAL STOCK NUMBER	FIGURE NUMBER	ITEM NUMBER OR REF. DESIGNATION
5905-279-3518	20	34 (1A1R23)
5905-279-3518	20	34 (1A2R23)
5905-279-3520	15	12 (8R6)
5905-279-3520	15	12 (8R9)
5905-299-1541	15	17 (8R13)
5905-299-1965	20	14 (1A1R3)
5905-299-1965	20	14 (1A1R4)
5905-299-1965	20	14 (1A1R10)
5905-299-1965	20	14 (1A1R11)
5905-299-1965	20	14 (1 A1R12)
5905-299-1965	20	14 (1A1R13)
5905-299-1965	20	14 (1A2R3)
5905-299-1965	20	14 (1A2R4)
5905-299-1965	20	14 (1A2R10)
5905-299-1965	20	14 (1 A2R11)
5905-299-1965	20	14 (1A2R12)
5905-299-1965	20	14 (1A2R13)
5905-299-1971	20	35 (1A1R7)
5905-299-1971	20	35 (1 A2R7)
5905-299-2041	19	3 (1A7R21)
5905-369-9298	16	10 (1R6)
5905-369-9298	16	10 (1R7)
5905-369-9299	16	4 (1AT7)
5905-539-4580	6	33
5905-681-6462	19	62 (1A7R2)
5905-681-8817	19	30A (1A7R30)
5905-681-9969	19	60 (1A7R27)
5905-681-9970	19	58 (1A7R25)
5905-682-4095	19	64 (1A7R22)
5905-682-4100	19	33 (1A7R5)
5905-682-4109	19	14 (1A7R12)
5905-682-4109	19	62 (1A7R2)
5905-683-2239	19	32 (1A7R23)
5905-683-2241	19	6 (1A7R19)
5905-683-2241	19	6 (1 A7R29)
5905-683-2241	19	68 (1 A7R9)
5905-683-2246	19	45 (1 A7R16)
5905-683-2338	19	20 (1A7R4)
5905-683-2338	19	20 (1 A7R10)
5905-683-2338	19	20 (1A7R13)
5905-683-2338	19	20 (1A7R28)
5905-686-3060	15	16 (8R11)
5905-686-3060	15	16 (8R12)
5905-686-3358	19	21 (1A7R6)
5905-686-3368	19	18 (1 A7R11)
5905-686-3368	19	53 (1A7R17)
5905-686-3370	19	19 (1A7R7)
5905-686-3370	19	19 (1A7R8)
5905-686-3370	19	30 (1 A7R1)
5905-686-3370	19	30 (1A7R24)
5905-686-3838	19	12 (1A7R15)
5905-686-9994	19	62 (1A7R2)
5905-686-9996	19	62 (1A7R2)
5905-687-0000	19	34 (1A7R3)
5905-691-0195	19	42 (1 A7R26
5905-727-8001	19	62 (1A7R2)
5905-730-4764	16	5 (1AT8)
5905-755-0858	17	8 (1A3R1)
5905-755-0858	17	8 (1A4R1)
5905-755-2089	20	22 (1A1R26)
5905-755-2089	20	22 (1A2R26)
5905-763-8281	15	27 (8R10)
5905-801-6444	19	62 (1A7R2)

SECTION VII INDEX-FEDERAL STOCK NUMBER CROSS REFERENCE TO FIGURE AND ITEM NUMBER OR REFERENCE DESIGNATION AN/ASM-339(V)1

FEDERAL STOCK NUMBER	FIGURE NUMBER	ITEM NUMBER OR REF. DESIGNATION
5905-801-6998	19	62 (1A7R2)
5905-802-6730	19	13 (1A7R14)
5905-807-4954	19	62 (1A7R2)
5905-835-1635	19	9 (1A7R18)
5905-836-4559	15	44 (8R1)
5905-836-4559	15	44 (8R3)
5905-837-4768	15	41 (8R4)
5905-842-0610	20	20 (1A1RT1)
5905-842-0610	20	20 (1A2RT1)
5905-849-7677	15	21 (8R8)
5905-850-9100	19	44 (1A7RT1)
5905-879-8240	14	32 (5R3)
5905-880-0942	15	26 (8R14)
5905-901-2818	15	10 (8R5)
5905-912-6865	16	14 (1R3)
5905-912-6865	16	14 (1R4)
5905-946-9497	14	11 (5R1)
5910-057-4742	18	8 (1A5C2)
5910-057-4742	18	8 (1A6C2)
5910-057-5218	20	40 (1A1C3)
5910-057-5218	20	40 (1A2C3)
5910-082-4964	20	42 (1A1C2)
5910-082-4694	20	42 (1A2C2)
5910-116-8610	15	45 (8C2)
5910-116-8611	15	20 (8C 7)
5910-116-8612	15	4 (8C1)
5910-369-9274	12	25 8C14)
5910-369-9275	12	25 (8C14)
5910 -369 -9276	12	25 (8C14)
5910-369-9277	12	25 (8C14)
5910-369-9278	12	25 (8C14)
5910-369-9279	12	25 (8C14)
5910-369-9280		25 (8C14)
5910-369-9288	15	19 (8C6)
5910-369-9292	15	42 (8C3)
5910-369-9294	15	30 (8C10)
5910-369-9294	15	30 (8C11)
5910-518-4608	20	55
5910-518-4608	19	85
5910-538-4942	21	12 (1A8C5)
5910-553-3437	19	61 (1A7C3)
5910-553-3437	19	63 (1A7C6)
5910-553-3437	19	63 (1 A7C20)
5910-574-2013	19	38 (1A7C25)
5910-574-2013	19	51 (1A7C1)
5910-574-2013	19	51 (1 A7C4)
5910-574-2013	19	51 (1A7C12)
5910-578-8885	20	3
5910-608-4544	15	55
5910-608-4544	20	56
5910-615-0442	21	12 (1 A8C5)
5910-617-3246	21	20 (1A8C4)
5910-644-3818	19	31 (1A7C5)
5910-644-3818	19	31 (1A7C19)
5910-648-8520	15	53
5910-648-8520	20	57
5910-648-8521	18	21
5910-648-8521	21	25
5910-648-8521	15	54
5910-649-0632	19	63 (1A7C6)
5910-649-0632	19	63 (1A7C20)
5910-660-4728	21	12 (1A8C5)
5910-669-1752	19	54 (1 A7C16)
5910-669-1752	19	54 (1A7C17)
5910-669-1752	19	63 (1A7C6)
5910-669-1752	19	63 (1A7C20)
5910-669-4281	21	12 (1A8C5)

SECTION VII INDEX-FEDERAL STOCK NUMBER CROSS REFERENCE TO FIGURE AND ITEM NUMBER OR REFERENCE DESIGNATION AN/ASM-339(V)1

FEDERAL STOCK NUMBER	FIGURE NUMBER	ITEM NUMBER OR REF. DESIGNATION
5910-682-3729	20	17 (1A1C8)
5910-682-3729	20	41 (1A1C11)
5910-682-3729	20	17 (1A2C8)
5910-682-3729	20	17 (1 A2C9)
5910-682-3729	20	41 (1A2C10)
5910-682-3729	20	41 (1A2C11)
5910-686-9040	20	5 (1A1C2)
5910-686-9040	20	5 (1A2C2)
5910-686-9041	19	52 (1A7C7)
5910-686-9041	19	52 (1A7C13)
5910-686-9041	19	52 (1A7C15)
5910-686-9041	19	63 (1A7C6)
5910-686-9041	19	63 (1A7C20)
5910-701-9116	18	7 (1A5C1)
5910-701-9116	18	7 (1A6C1)
5910-712-6166	3	11 (2C4)
5910-724-5251	20	45 (1A1C6)
5910-724-5251	20	45 (1A2C6)
5910-754-9376	3	10 (2C1)
5910-754-9376	3	10 (2C2)
5910-754-9376	3	10 (2C3)
5910-754-9392	20	15 (1A1C4)
5910-754-9392	20	15 (1A2C4)
5910-781-2675	15	2 (8C8)
5910-781-2675	15	2 (8C9)
5910-809-4701	19	5 (1A7C8)
5910-809-4701		5 (1A7C14)
5910-811-0961	20	4 (1A1C5)
5910-811-0961	20	4 (1A2C5)
5910-815-8932	21	12 (1A8C5)
5910-821-4470	19	55 (1A7C18)
5910-826-3122	19	49 (1 A7C10)
5910-835-2739	15	43 (8C5)
5910-849-0697	19	63 (1 A7C6)
5910-849-0697	19	63 (1A7C20)
5910-849-0697	19	67 (1A7C27)
5910-849-5261	20	16 (1A1C7)
5910-849-5261		16 (1A2C7)
5910-850-0832	19	46 (1 A7C28)
5910-850-0832	19	46 (1A7C29)
5910-850-0832	21	18 (1A8C1)
5910-850-0832	21	18 (1A8C2)
5910-850-0832	21	18 (1A8C3)
5910-851-2095	19	57 (1A7C22)
5910-851-2095	19	57 (1 A7C24)
5910-851-5465	20	46 (1 A1C14)
5910-851-5465	20	46 (1A2C14)
5910-883-0205	20	23 (1A1C1)
5910-883-0205	20	23 (1 A2C1)
5910-912-9344	21	21 (1A8C7)
5910-913-1073	21	19 (1A8C6)
5910-913-7135	15	32 (8C12)
5910-913-7135	15	32 (8C13)
5910-940-2972	19	59 (1A7C21)
5910-940-2972	19	59 (1A7C26)
5910-956-3241	15	40 (8C4)
5910-960-8659	19	17 (1A7C9)
5910-984-7982	19	56 (1A7C23)
5910-989-1239	19	63 (1A7C6)
5910-989-1239	19	63 (1A7C20)
5910-989-1263	19	63 (1A7C6)
5910-989-1263	19	63 (1A7C20)

SECTION VII INDEX-FEDERAL STOCK NUMBER CROSS REFERENCE TO FIGURE AND ITEM NUMBER OR REFERENCE DESIGNATION AN/ASM-339(V)1

FEDERAL STOCK NUMBER	FIGURE NUMBER	ITEM NUMBER OR REF. DESIGNATION
5920 -879 -3570	7	5
5920-879-3570	16	21 (1F1)
5920-879-3570	16	21 (1F2)
5920-892-9311	16	22
5930-104-1308	16	43 (1AT6)
5930-106-3842	16	13 (1AT4)
5930-106-3842	16	13 (1AT5)
5930-615-7883	16	11 (1S1)
5930-615-7883	16	11 (1S2)
5930-615-7897	16	32 (1S11
5930-615-9376	16	8 (1S3)
5930-615-9376	14	8 (5S3)
5930-655-1581	16	20 (1S7)
5930-655-1582	16	2 (1S4)
5930-655-1582	16	2 (1S5)
5930-655-1582	16	2 (1S6)
5930-843-0245	16	42 (1S8)
5930-843-0250	16	12 (1AT2)
5930-843-0250	16	12 (1AT3)
5930-843-0276	14	7 (5S1)
5930-939-4376	14	6 (5S2)
5930-939-4376	16	34 (1S10)
5930-939-4418		27 (1S9)
5935-061-7372	4	2 (W2P2)
5935-061-7372		2 (W3P2)
5935-061-7372	11	29 (W4P1)
5935-104-3498	17	15 (1A3J1)
5935-104-3498	17	15 (1A4J1)
5935-104-3499	20	26 (1A1J1)
5935-104-3499	20	26 (1A2J1)
5935-104-8427	18	3 (1A5J1)
5935-148-9378		19 (8P801)
5935-149-2901	4	2 (W1P2)
5935-246-4519	10	30
5935-259-2019	6	18
5935-539-2045	14	37 (5J3)
5935-542-9012	11	19 (5P3)
5935-542-9012	10	21 (W105P1)
5935-549-4690	6	29 (8J803)
5935-683-6028	9	18 (3J1)
5935-683-6028	8	20 (4J1)
5935-687-1093	14	38 (5J4)
5935-755-3688	6	37 (8J805)
5935-761-3871	13	24 (1P5)
5935-761-3871	13	24 (1P6)
5935-776-7099	3	9 (2J3)
5935-801-6620	8	19 (4J2)
5935-805-7783	4	3 (W1P1)
5935-812-5001	3	8 (2J2)
5935-812-5575	21	7 (1A8J1)
5935-841-7256	13	23 (1P3)
5935-841-7256	13	23 (1P4)
5935-841-7265	13	22 (1P1)
5935-841-7265	13	22 (1P2)
5935-845-6764	11	28 (W4P2)
5935-865-9599	4	3 (W2P1)
5935-865-9599		3 (W3P1)
5935-865-9599	11	27 (W4P3)
5935-893-7307	14	3 (5J1)
5935-893-7307	13	14 (1J2)
5935-893-7307	13	14 (1J3)
5935-903-3512	13	17 (1P8)
5935-904-0042	3	7 (2J1)
5935-904-0042	14	4 (5J2)

SECTION VII INDEX-FEDERAL STOCK NUMBER CROSS REFERENCE TO FIGURE AND ITEM NUMBER OR REFERENCE DESIGNATION AN/ASM-339(V)1

FEDERAL STOCK NUMBER	FIGURE NUMBER	ITEM NUMBER OR REF. DESIGNATION
5935 -973-5409	13	15 (1J4)
5935-982-7836	13	16 (1P7)
5935-982-7836	19	36 (1A7J1)
5935-998-6239	13	12 (1J1)
5940-050-2308	17	16 (1E1)
5940-054-7630	6	42 (8E801)
5940-068-4613	18	17
5940-068-4613	13	41
5940-068-4613	23	23
5940-257-5677	20	27 (1E1)
5940-258-2124	16	24 (1E2)
5940 -270 -3274	15	49
5940-420-7819	10	10
5940-500-8722	13	20 (BG1)
5940-500-8722	13	20 (BG2)
5940 -549 -7247	19	37 (E1)
5940-549-8176	3	18
5940-614-0537	12	19 (8E1)
5940-614-0537	6	38 (8E804)
5940-614-0537	12	51
5940-636-5539	4	6 (W2BG1)
5940-636-5539	4	6 (W3BG1)
5940-655-3271	10	15 (TB1)
5940-655-3271	10	36 (TB2)
5940-655-3913	10	23
5940-655-3913	10	38
5940-661-0400	6	21
5940-665-9580	17	17 (1E21)
5940-665-9580	17	17 (1E3)
5940-681-8183	3	15 (2E10)
5940-682-0768	4	8 (W2E2)
5940-682-0768	4	8 (W2E3)
5940-682-0768	4	8 (W2E5)
5940 -682 -0768	4	8 (W2E6)
5940-682-0768	4	8 (W2E7)
5940-682-0768	4	8 (W2E8)
5940 -682 -0768	4	8 (W2E9)
5940-682-0768	4	8 (W2E10)
5940-682-0768	4	8 (W3E2)
5940-682-0768	4	8 (W3E3)
5940-682-0768	4	8 (W3E3)
5940-682-0768	4	8 (W3E5)
5940-682-0768	4	8 (W3E6)
5940-682-0768	4	8 (W3E7)
5940-682-0768	4	8 (W3E8)
5940-682-0768	4	8 (W3E9)
5940-682-0768	4	8 (W3E10)
5940-685-8542	19	73
5940-704-6091	20	50
5940-704-6091	19	72
5940-832-5787	4	7 (W2E1)
5940-832-5787	4	7 (W2E4)
5940-832-5787	4	7 (W3E1)
5940-832-5787	4	7 (W3E4)
5940-842-3847	19	77
5940-842-6478	19	74
5940-872-0888	13	19
5940-901-1405	14	39
5940-901-1405	19	71
5940-920-3339	13	18
5940-923-4493	13	19A
5940-929-5830	21	22
5940-929-5830	15	50
5940-990-1658	18	19
5940-990-1658	21	30
5950-106-3809	12	40 (8T3)
5950-106-3810	12	32 (8T2)
5950-106-3811	12	32 (8T1)
5950-106-3812		48 (8T4)
5950-106-3813	12	33 (8T5)
5950-106-3814	12	37 (8L3)
5950-106-3815	12	41 (8L4)
5950-106-3816	12	45 (8L2)
5950-556-1533	3	14 (2L1)

SECTION VII INDEX-FEDERAL STOCK NUMBER CROSS REFERENCE TO FIGURE AND ITEM NUMBER OR REFERENCE DESIGNATION AN/ASM-339(V)1

FEDERAL STOCK NUMBER	FIGURE NUMBER	ITEM NUMBER OR REF. DESIGNATION
5950-657-7708	20	39 (1A1T1)
5950-657-7708	20	39 (1A2T1)
5950 -773-9958	20	10 (1A1L1)
5950-773-9958	20	10 (1A2L1)
5950-773-9958	19	28 (1A7L1)
5950-773-9958	19	65 (1A7L3)
5950-799-4163	19	10 (1 A7T1)
5950-799-4163	19	10 (1A7T2)
5950-799-4163		10 (1A7T4)
5950-799-4163	19	10 (1A7T5)
5950-812-7259	16	19 (1T1)
5950-814-7146	18	13 (1A5T1)
5950-814-7146	18	13 (1A6T1)
5950-851-4221	19	4 (1A7T3)
5950-851-4221	19	4 (1A7T6)
5950-851-4221	16	26 (1T2)
5950-911-3440	19	41 (1A7T7)
5950-969-9738	12	44 (8L1)
5960-991-8781	20	48
5961-064-2379	18	9 (1A5CR1)
5961-064-2379	18	9 (1A5CR2)
5961-064-2379	18	9 (1A6CR1)
5961-064-2379	18	9 (1A6CR2)
5961-068-8551	19	11 (1A7CR6)
5961-068-8551	19	66 (1A7CR5)
5961 -078 -9593	20	11 (1A1Q3)
5961 -078-9593	20	11 (1A1Q4)
5961-078-9593	20	11 (1A2Q3)
5961-078-9593	20	11 (1A2Q4)
5961-104-3489	15	5 (8CR3)
5961-104-5855	19	29 (1A7Q1)
5961-104-5855	19	29 (1A7Q7)
5961-519-7816	20	24 (1A1CR1)
5961-519-7816	20	24 (1A1CR2)
5961-519-7816	20	24 (1 A2CR1)
5961-519-7816	20	24 (1A2CR2)
5961-653-9945	19	15 (1A7CR3D)
5961-655-9945	19	16 (1A7CR4C)
5961-653-9945	19	16 (1 A7CR4D)
5961-653-9945	19	47 (1A7CR4A)
5961-653-9945	19	47 (1A7CR4B)
5961-653-9945	19	48 (1A7CR3A)
5961-653-9945	19	48 (1A7CR3B)
5961-653-9945	19	48 (1A7CR3C)
5961-752-6081	15	3 (8Q7)
5961-752-6081	15	3 (8Q8)
5961-752-6081	19	39 (1 A7Q5)
5961-752-6081	19	39 (1A7Q6)
5961-752-6159	18	5 (1A5CR3)
5961-752-6159	18	5 (1A6CR3)
5961-787-5305	19	8 (1A7Q2)
5961-787-5305	19	8 (1A7Q3)
5961-787-5305	19	8 (1A7Q4)
5961-787-5305	15	15 (8Q4)
5961-787-5305	15	15 (8Q5)
5961-787-5305	15	15 (8Q6)
5961-847-5508	15	39 (8CR2)
5961-865-0029	15	14 (8Q1)
5961-865-0029	12	21 (8Q2)
5961-865-0029	12	21 (8Q9)
5961-865-0029	12	21 (8Q10)
5961-873-1973	19	2 (1A7CR7)

SECTION VII INDEX-FEDERAL STOCK NUMBER CROSS REFERENCE TO FIGURE AND ITEM NUMBER OR REFERENCE DESIGNATION AN/ASM-339(V)1

FEDERAL STOCK NUMBER	GU	ITEM NUMBER OR REF. DESIGNATION
5961-873-1973	19	2 (1A7CR8)
5961-873-1973	19	2 (1A7CR9)
5961-873-1973	19	2 (1A7CR10)
5961-873-1973	19	2 (1A7CR11)
5961-873-1973	15	13 (8CR4)
5961-873-1973	15	13 (8CR5)
5961-873-1973	15	13 (8CR6)
5961-873-1973	15	13 (8CR7)
5961-873-1973	15	13 (8CR8)
5961-873-1973	16	38 (CR1)
5961-873-1973	16	38 (CR2)
5961-873-1973	16	38 (CR3)
5961-873-1973	16	38 (CR4)
5961-873-1973	19	50 (1A7CR12)
5961-873-1973	19	50 (1A7CR13)
5961-068-8551	19	50 (1A7CR14)
5961-891-7175	15	37 (8Q3)
5961-892-3473	20	43 (1A1Q1)
5961-892-3473	20	43 (1A1Q2)
5961-892-3473	20	43 (1A1Q5)
5961-892-3473	20	43 (1A1Q6)
5961-892-3473	20	43 (1A1Q7)
5961-892-3473	20	43 (1A1Q8)
5961-892-3473	20	43 (1A2Q1)
5961-892-3473	20	43 (1A2Q2)
5961-892-3473	20	43 (1A2Q5)
5961-892-3473	20	43 (1A2Q6)
5961-892-3473	20	43 (1A2Q7)
5961-892-3473	20	43 (1A2Q8)
5961-893-5939	15	38 (8CR1)
5961-899-9352	20	47
5961-904-3486	15	47

FEDERAL STOCK NUMBER	FIGURE NUMBER	ITEM NUMBER OR REF. DESIGNATION
5961-904-3486	19	70
5961-951-5681	15	48
5970-104-2650	11	32
5970-104-4708	4	5
5970-104-4708	11	30
5970-237-5662	19	7
5970-769-8068	18	15
5970-906-1347	4	4
5970-940-9197	4	4
5970-940-9197	11	31
5975-068-0790	16	25
5990-781-3581	21	48 (1A8B2)
5990-835-1582	21	49 (1 A8B1)
5999-220-5237	21	21 (1A8)
6105-229-6542		20
6105-733-3090	21	45 (1 A8MG1)
6105-806-8614	17	14 (1A3MG1)
6105-806-8614	17	14 (1 A4MG1)
6130-131-6340	6	22
6130-228-8445	12	4
6135-802-5479	20	44 (1A1BT1)
6135-802-5479	20	44 (1 A2BT1)
6210-989-9885	16	6
6240-223-9100	7	5A
6240-223-9100	16	7 (1DS1)
6240-223-9100	16	7 (1DS2)
6240-223-9100	16	7 (1DS3)
6240-223-9100	16	7 (1DS4)
6240-223-9100	16	7 (1DS5)
6240-223-9100	16	7 (1DS6)
6240-223-9100	16	7 (1DS7)
6605-013-9291	2	11
6605-125-7401	10	50
6605-179-1706	1	11 (W3)
6605-179-1830	16	40 (1AT1)
6605-198-5946	9	13
6605-228-8439	10	54
6605-229-5296	8	12
6605-244-5700	8	7
6605-247-0188	5	5
6605-247-0189	5	5
6605-247-0190	5	5
6605-247-0191	2	15
6605-247-0192	21	3
6605-247-0194	14	14

SECTION VII INDEX-FEDERAL STOCK NUMBER CROSS REFERENCE TO FIGURE AND ITEM NUMBER OR REFERENCE DESIGNATION AN/ASM-339(V)1

FEDERAL STOCK NUMBER	FIGURE NUMBER	ITEM NUMBER OR REF. DESIGNATION
6605-252-2341	5	6
6605-421-1753	5	4
6605-421-1754	5	4
6605-421-1755	5	4
6605-421-1756	66	10
6605-421-1757	10	60
6605-421-1760	5	6
6605-421-1761	5	6
6605-435-2601	3	3
6605-453-5671	2	16
6605-650-6785	10	14
6605-650-6785	10	35
6605-650-6791	11	20
6605-650-6791	14	21
6605-687-2625	21	51
6605-687-2625	21	53
6605-687-2625	21	57
6605-715-4758	17	2
6605-715-4760	17	7
6605-715-4761	17	13
6605-715-6944	10	49
6605-767-4730	16	45
6605-782-0227	11	(W4)
6605-782-0228	1	14
		(8)
6605-782-0231	1	15
6605-782-0234	1	16
		(4)
6605-782-0237	1	7
		(W2)
6605-782-0253	8	21
6605-782-0256	1	18
6605-782-0276	1	17
		(3)
6605-782-0281	1	(MC-2)
6605-782-0282		6
		(2)
6605-782-0291	1	9
		(W1)
6605-786-9791	10	48
6605-787-1617	17	6
6605-835-5641	16	35
		(1A8)
6605-872-2073	9	3
6605-872-2073	8	3
6605-900-9099	6	32
6615-092-0749	16	49
6615-345-3530	21	29
6615-421-1759	14	10
6625-083-7332	21	42
6625-837-2416	21	39
6625-844-6631	16	17
		(1M2)
6625-908-0883	14	16
6625-908-0884	14	29
6625-912-8335	16	6
		(1M1)
6635-104-2193	16	15
		(1M3)
6645-732-5425	13	35
		(1DS8)
6650-228-8437	10	51H
6650-228-8438	10	51F
6650-228-8440	11	8
6650-400-2625	10	72
6650-801-1672	10	51
9905-144-6954	8	2
9905-144-6984	8	5
9905-178-5840	11	2
9905-229-6584	3	2
9905-229-6585	9	2
9905-229-6586	21	2
9905-229-6587	1	2
9905-229-6588	12	2
9905-229-6589	10	2
9905-229-6590	6	6
9905-229-6591	9	5
9905-229-6592	11	5
9905-229-6593	12	3
9905-229-6594	7	2
9905-229-6595	21	9

Reference No.	Mfg. Code	Fig. No.	Ref. Desig.
AL10-32X1-2	07187	2	13
AL1-16X5-32	42838	21	26
A16025	06995	8	18
A16118	06995	9	17
A6047	06995	8	17
BRSNO-0-80	56878	23	5
BRS1-72X5-16	77250	23	20
BRS2-48	73439	22	10
BRS2-56	73439	10	13
BRS2-56	73439	10	18
BRS2-56X1-2	73439	10	33
BRS2-56X1-4	73439	10	8
BRS2-56X1-4	73439	10	16
BRS2-56X1-4	73439	10	31
BRS2-56X1-16	73439	10	46
B16025	06995	9	16
CB629	71218	3	23
CRES3-32X1-8	42838	3	20
H25	80294	15	9
H25	80294	15	25
MS16535-21	96906	20	53
MS16535-22	96906	18	20
MS16535-22	96906	21	24
MS16535-22	96906	15	52
MS16535-22	96906	20	54
MS16535-76	96906	16	29
MS16535-157	96906	12	8
MS3102R14S7P	96906	12	17
			(8J801)
MS35209-11	96906	14	9
MS35209-21	96906	10	58
MS35209-21	96906	10	64
MS35209-35	96906	21	10
MS35209-35	96906	16	36
MS35209-49	96906	16	39
MS35209-49	96906	16	41
MS35229-10	96906	14	22
R2456	98376	1	20
SS3-48X1-4	70318	17	11

SECTION VII INDEX-FEDERAL STOCK NUMBER CROSS REFERENCE TO FIGURE AND ITEM NUMBER OR REFERENCE DESIGNATION AN/ASM-339(V)1

Reference No.	Mfg. Code	Fig. No.	Ref. Desig.
UN1VHD1-16X5-32	42838	19	76
UN1VHD1-16X5-32	42838	19	84
UN1VHD3-32X5-32	42838	19	78
UN1VHD3-32X5-32	42838	19	80
UN1VHD3-32X5-32	42838	19	82
ZCC128-128D	98376	11	33
ZCC192288CD2465	98376	10	73
ZCC192288CD3138	98376	9	20
ZCC254-254D2454	98376	7	6
0187-2	07187	23	21
047-13	56232	13	43
130630	56232	22	2
16064	06995	8	10
16120	06995	9	14
16451	06995	8	8
16490	06995	9	10
1700921	07187	10	59
1700921	07187	10	65
1717065	07187	16	47
1751905	07187	6	2
1752176-14	07187	10	22 (W105G)
1780948	07187	10	(W105)
232687	07187	22	4
232688	07187	22	6
232689	07187	22	7
232698	07187	22	11
232698	07187	23	14
232699	07187	22	12
232699	07187	23	15
249385	07187	22	3
2503010	07187	2	8
2504226	07187	10	3
2504247	07187	12	10
2504253	07187	12	20
2504254	07187	12	9
2518005	07187	2	7
2519187-1	07187	21	34
2519204	07187	14	28
2519205	07187	14	17
2519206	07187	14	19
2519352	07187	21	69
2519374-6	07187	23	18
2519386	07187	23	13
2555606	07187	11	22
2555608	07187	11	15
2555609	07187	14	25
2555610	07187	11	13
2555743	07187	19	86
2555828	07187	16	28
2556347	07187	12	54
2556348	07187	12	29
2557452	07187	23	8
2557455	07187	23	6
2557456	07187	23	9
2557457	07187	23	16 (3L4)
2557458	07187	23	12 (3L1)

Reference No.	Code		
2557458	07187		
2557458	07187		12 (3L3)
2557574	07187	1	3
2578008	07187	2	21
2580290	07187	18	18
2580298	07187	14	42
2580323	07187	14	20
2580653	07187	21	70
2580654	07187	21	63
2580720	07187	21	8
2581019	07187	8	4
2587139-1	07187	1	8
2587139-2	07187	1	10
2587139-3	07187	1	12
2587149-1	07187	1	5
2587166	07187	14	14 (5Z1)
2587172	07187	13	42
2587183-225	07187	14	12
2587183-357	07187	16	46
2587203	07187	20	51
2587948	07187	14	44
2587952	07187	21	23
2587955	07187	11	23
2588274	07187	19	75
2588334	07187	6	41
2588455	07187	15	51
2588456	07187	12	22
2588527	07187	12	55
2591988	07187	23	19
2592539	07187	16	50
2592573	07187	13	26
2592574	07187	7	3
2592578	07187	23	24
2592591	07187	9	6
327302	07187	23	10
327302	07187	22	14
327303	07187	22	5
327303	07187	23	7
327304	07187	22	17
327305	07187	22	15
6007-8C	91506	19	79
6013-15C	91506	19	81
609709	07187	22	18
7-16-4-140	95987	13	5
7-16-4-140	95987	13	10
737847-101	56232	10	24 (W105A)
737847-101	56232	10	39
737847-102	56232	10	25 (W105B)
737847-102	56232	10	40
737847-103	56232	10	26 (W105C)
737847-103	56232	10	41
737847-104	56232	10	27 (W105D)

SECTION VII INDEX-FEDERAL STOCK NUMBER CROSS REFERENCE TO FIGURE AND ITEM NUMBER OR REFERENCE DESIGNATION

AN/ASM-339(V)1

Reference No.	Mfg. Code	Fig. No.	Ref. Desig.
737847-104	56232	10	42
737847-105	56232	10	28 (W105E)
737847-105	56232	10	43
737847-106	56232	10	29 (W105F)
737847-106	56232	10	44
79NCFMA2-26	72962	12	18
871020	07187	22	16
871022	07187	22	13 (5L4)
871022	07187	22	13 (5Z1L4)
871023	07187	22	9 (5L1)
871023	07187	22	9 (5L2)
871023	07187	22	9 (5L3)
871023	07187	22	9 (5Z1L1)
871023	07187	22	9 (5Z1L2)
871023	07187	22	9 (5Z1L3)

Reference No.	Mfg. Code	Fig. No.	Ref. Desig.

SECTION VIII INDEX. REFERENCE DESIGNATION

CROSS REFERENCE TO PAGE NUMBER (AN/ASM-339(V)1)

REFERENCE DESIGNATION	PAGE NUMBER	REFERENCE DESIGNATION	PAGE NUMBER	REFERENCE DESIGNATION	PAGE NUMBER
BG1	C-27	1DS3	C-5,C-23	1A1Q6	C-14
BG2	C-27	1DS4	C-5,C-23	1A1Q7	C-14
CR1	C-24	1DS5	C-5,C-23	1A1Q8	C-14
CR2	C-24	1DS6	C-5,C-23	1A1R1	C-13
CR3	C-24	1DS7	C-5,C-23	1A1R2	C-13
CR4	C-24	1DS8	C-20	1A1R3	C-13
E1	C-15	1E1	C-15	1A1R4	C-13
MC-2	C-5,C-7	1E2	C-19	1A1R5	C-14
TB1	C-8	1E3	C-19	1A1R6	C-13
TB2	C-9	1F1	C-5,C-20	1A1R7	C-14
W1	C-5,C-11	1F2	C-5,C-20	1A1R8	C-13
W1P1	C-11	1J1	C-26	1A1R9	C-14
W1P2	C-11	1J2	C-26	1A1R10	C-13
W2	C-5,C-11	1J3	C-26	1A1R11	C-13
W2BG1	C-12	1J4	C-26	1A1R12	C-13
W2E1	C-12	1M1	C-24	1A1R13	C-13
W2E2	C-12	1M2	C-23	1A1R14	C-14
W2E3	C-12	1M3	C-23	1A1R15	C-14
W2E4	C-12	1P1	C-26	1A1R16	C-14
W2E5	C-12	1P2	C-26	1A1R17	C-13
W2E6	C-12	1P3	C-26	1A1R18	C-14
W2E7	C-12	1P4	C-26	1A1R19	C-14
W2E8	C-12	1P5	C-26	1A1R20	C-14
W2E9	C-12	1P6	C-26	1A1R21	C-14
W2E10	C-12	1P7	C-26	1A1R22	C-14
W2P1	C-11	1P8	C-26	1A1R23	C-13
W2P2	C-11	1R1	C-23	1A1R24	C-14
W3	C-5,C-11	1R3	C-23	1A1R25	C-14
W3BG1	C-11	1R4	C-23	1A1R26	C-14
W3E1	C-11	1R5	C-23	1A1RT1	C-14
W3E2	C-11	1R6	C-23	1A1T1	C-14
W3E3	C-11	1R7	C-23	1A2	C-12
W3E4	C-11	1S1	C-24	1A2BT1	C-12
W3E5	C-11	1S2	C-24	1A2C1	C-12
W3E6	C-11	1S3	C-24	1A2C2	C-12
W3E7	C-11	1S4	C-24	1A2C3	C-12
W3E8	C-11	1S5	C-24	1A2C4	C-12
W3E9	C-11	1S6	C-24	1A2C5	C-12
W3E10	C-11	1S7	C-24	1A2C6	C-12
W3P1	C-11	1S8	C-24	1A2C7	C-12
W3P2	C-11	1S9	C-24	1A2C8	C-12
W4	C-5,C-27	1S10	C-24	1A2C9	C-12
W4P1	C-27	1S11	C-24	1A2C10	C-12
W4P2	C-27	1T1	C-24	1A2C11	C-12
W4P3	C-27	1T2	C-24	1A2C14	C-12
W105	C-8	1A1	C-12	1A2CR1	C-13
W105A	C-8	1A1BT1	C-12	1A2CR2	C-13
W105B	C-8	1A1C1	C-12	1A2J1	C-15
W105C	C-8	1A1C2	C-12	1A2L1	C-13
W105D	C-8	1A1C3	C-12	1A2Q1	C-14
W105E	C-8	1A1C4	C-12	1A2Q2	C-14
W105F	C-8	1A1C5	C-12	1A2Q3	C-14
W105G	C-8	1A1C6	C-12	1A2Q4	C-14
W105P1	C-8	1A1C7	C-12	1A2Q5	C-14
Z223	C-25	1A1C8	C-12	1A2Q6	C-14
Z2441	C-40	1A1C11	C-12	1A2Q7	C-14
1AT1	C-24	1A1C14	C-12	1A2Q8	C-14
1AT2	C-24	1A1CR1	C-13	1A2R1	C-13
1AT3	C-24	1A1CR2	C-13	1A2R2	C-13
1AT4	C-24	1A1J1	C-15	1A2R3	C-13
1AT5	C-24	1A1L1	C-13	1A2R4	C-13
1AT6	C-27	1A1Q1	C-14	1A2R5	C-14
1AT7	C-24	1A1Q2	C-14	1A2R6	C-13
1AT8	C-24	1A1Q3	C-14	1A2R7	C-14
1DS1	C-5,C-23	1A1Q4	C-14	1A2R8	C-13
1DS2	C-5,C-23	1A1Q5	C-14	1A2R9	C-14

SECTION VIII. INDEX- REFERENCE DESIGNATION

CROSS REFERENCE TO PAGE NUMBER (CONTINUED)

REFERENCE DESIGNATION	PAGE NUMBER
1A2R10	C-13
1A2R11	C-13
1A2R12	C-13
1A2R13	C-13
1A2R14	C-14
1A2R15	C-14
1A2R16	C-14
1A2R17	C-13
1A2R18	C-14
1A2R19	C-14
1A2R20	C-14
1A2R21	C-14
1A2R22	C-14
1A2R23	C-13
1A2R24	C-14
1A2R25	C-14
1A2R26	C-14
1A2RT1	C-14
1A2T1	C-14
1A3	C-19
1A3J1	C-19
1A3MG1	C-19
1A3R1	C-19
1A4	C-19
1A4J1	C-19
1A4MG1	C-19
1A4R1	C-19
1A5	C-25
1A5C1	C-25
1A5C2	C-25
1A5CR1	C-25
1A5CR2	C-25
1A5CR3	C-25
1A5J1	C-25
1A5R1	C-25
1A5R2	C-25
1A5T1	C-25
1A6	C-25
1A6C1	C-25
1A6C2	C-25
1A6CR1	C-25
1A6CR2	C-25
1A6CR3	C-25
1A6J1	C-25
1A6R1	C-25
1A6R2	C-25
1A6T1	C-25
1A7	C-15
1A7C1	C-15
1A7C3	C-15
1A7C4	C-15
1A7C5	C-16
1A7C6	C-15
1A7C7	C-15
1A7C8	C-15
1A7C9	C-15
1A7C10	C-16
1A7C12	C-15
1A7C13	C-15
1A7C14	C-15
1A7C15	C-15
1A7C16	C-15
1A7C17	C-15
1A7C18	C-15
1A7C19	C-16
1A7C20	C-15
1A7C20	C-15
1A7C21	C-16
1A7C22	C-15
1A7C23	C-16
1A7C24	C-15
1A7C25	C-15
1A7C26	C-16
1A7C27	C-15
1A7C28	C-15
1A7C29	C-15
1A7CR3A	C-17
1A7CR3B	C-17
1A7CR3C	C-17
1A7CR3D	C-17
1A7CR4A	C-17
1A7CR4B	C-17
1A7CR4C	C-17
1A7CR4D	C-17
1A7CR5	C-18
1A7CR6	C-18
1A7CR7	C-17
1A7CR8	C-17
1A7CR9	C-17
1A7CR10	C-17
1A7CR11	C-17
1A7CR12	C-17
1A7CR13	C-17
1A7CR14	C-17
1A7J1	C-15
1A7L1	C-16
1A7L3	C-16
1A7Q1	C-18
1A7Q2	C-18
1A7Q3	C-18
1A7Q4	C-18
1A7Q5	C-18
1A7Q6	C-18
1A7Q7	C-18
1A7R1	C-17
1A7R2	C-16
1A7R3	C-17
1A7R4	C-17
1A7R5	C-17
1A7R6	C-17
1A7R7	C-17
1A7R8	C-17
1A7R9	C-17
1A7R10	C-17
1A7R11	C-17
1A7R12	C-16
1A7R13	C-17
1A7R14	C-16
1A7R15	C-17
1A7R16	C-17
1A7R17	C-17
1A7R18	C-16
1A7R19	C-17
1A7R20	C-16
1A7R21	C-16
1A7R22	C-16
1A7R23	C-16
1A7R24	C-17
1A7R25	C-17
1A7R26	C-17
1A7R27	C-17
1A7R28	C-17
1A7R29	C-17
1A7R30	C-17
1A7RT1	C-18
1A7T1	C-18
1A7T2	C-18
1A7T3	C-18
1A7T4	C-18
1A7T5	C-18
1A7T6	C-18
1A7T7	C-18
1A8	C-5, C-20
1A8B1	C-23
1A8B2	C-23
1A8C1	C-20
1A8C2	C-20
1A8C3	C-20
1A8C4	C-21
1A8C5	C-20
1A8C6	C-21
1A8C7	C-21
1A8J1	C-21
1A8MG1	C-22
2	C-5, C-7
2C1	C-7
2C2	C-7
2C3	C-7
2C4	C-7
2E10	C-7
2J1	C-7
2J2	C-7
2J3	C-7
2L1	C-7
3	C-31
3J1	C-32
3L1	C-32
3L2	C-32
3L3	C-32
3L4	C-32
3R1	C-32
4	C-6, C-40
4J1	C-41
4J2	C-41
5	C-5, C-27
5J1	C-31
5J2	C-31
5J3	C-29
5J4	C-29
5L1	C-28
5L2	C-28
5L3	C-28
5L4	C-28
5P3	C-27
5R1	C-29
5R2	C-29
5R3	C-29
5R4	C-29
5R5	C-29
5S1	C-31
5S2	C-31
5S3	C-31
5Z1L1	C-30
5Z1L2	C-30
5Z1L3	C-30

SECTION VIII. INDEX- REFERENCE DESIGNATION CROSS REFERENCE TO PAGE NUMBER (CONTINUED)

REFERENCE DESIGNATION	PAGE NUMBER	REFERENCE DESIGNATION	PAGE NUMBER	REFERENCE DESIGNATION	PAGE NUMBER
5Z1L4	C-30	8T4	C -37		
8	C-6,C -33	8T5	C -37		
8C1	C-34				
8C2	C-34				
8C3	C -34				
8C4	C-34				
8C5	C-34				
8C6	C -34				
8C7	C -34				
8C8	C -34				
8C9	C -34				
8C10	C-34				
8C11	C-34				
8C12	C -34				
8C13	C -34				
8C14	C -34				
8CR1	C -35				
8CR2	C -35				
8CR3	C-35				
8CR4	C -35				
8CR5	C -35				
8CR6	C -35				
8CR7	C -35				
8CR8	C -35				
8E1	C -38				
8E801	C -33				
8E804	C -38				
8J801	C -37				
8J803	C -33				
8J805	C -33				
8L1	C -36				
8L2	C-37				
8L3	C -36				
8L4	C-37				
8P801	C -33				
8Q1	C -36				
8Q2	C -37				
8Q3	C -36				
8Q4	C -36				
8Q5	C -36				
8Q6	C -36				
8Q7	C -36				
8Q8	C -36				
8Q9	C -37				
8Q10	C -37				
8R1	C -35				
8R2	C -35				
8R3	C -35				
8R4	C -35				
8R5	C -35				
8R6	C -35				
8R7	C -35				
8R8	C -35				
8R9	C -35				
8R10	C -35				
8R11	C -35				
8R12	C -35				
8R13	C -35				
8R14	C -35				
8R15	C -35				
8R16	C -35				
8T1	C -11				
8T2	C -37				
8T3	C -37				

SECTION IX PRESCRIBED LOAD ALLOWANCE (MX-1040A/ASN)

FEDERAL STOCK NUMBER	(2) DESCRIPTION	USABLE ON CODE	(3) 15-DAY ORG. MAINT. ALLOWANCE (a) 1-5	(b) 6-2	(c) 21-50	(d) 1-10
5305-764-3013	BOLT EXT RELIEVED BODY: 2519197	(07187)			2	2
5306-816-8057	BOLT EXT REL: 1700924	(07187)			2	2

SECTION x REPAIR PARTS FOR ORGANIZATIONAL MAINTENANCE (MX-1040A/ASN)

(1) SMR CODE	(2) FEDERAL STOCK NUMBER	(3) DESCRIPTION Reference Number & Mfr Code — USABLE ON CODE	(4) UNIT OF MEAS	(5) QTY INC IN UNIT	(6) 15-DAY ORGANIZATIONAL MAINTENANCE ALW (a) 1-5	(b) 6-20	(c) 21-50	(d) 51-100	(7) ILLUSTRATIONS (a) FIG NO.	(b) ITEM NO. OR REFERENCE DESIGNATION
H-O-S		A001 ADAPTER KIT, MAGNETIC COMPASS CALIBRATOR SET MX-1040A/ASN: 2592511 (07187) (This item is nonexpendable)							24	1
H-O-S		A002 ADAPTER, COMPASS CALIBRATOR SET MX-8163/ASN: 2592710 (07187)	EA	1					24	21
H-O-S		A003 ADAPTER OPT MT: 2582952 (07187)	EA	1					24	22
?-O	5306-816-8057	A012 BOLT EXT REL: 1700924 (07187)	EA	4	*	*	2	2	24	11
?-O	5306-816-8057	A015 BOLT EXT REL: SAME AS A012	EA	4	REF	REF	REF	REF	24	14
?-O	5306-816-8057	A018 BOLT EXT REL: SAME AS A012	EA	2	REF	REF	REF	REF	24	17
?-O	5305-764-3013	A019 BOLT EXT RE LIEVED BODY: 2519197 (07187)	EA	2	*	*	2	2	24	18
?-O	5306-816-8057	A022 BOLT EXT REL: SAME AS A012	EA	4	REF	REF	REF	REF	24	34
?-O	5305-764-3013	A025 BOLT EXT RELIEVED BODY: SAME AS A019	EA	3	REF	REF	REF	REF	24	31
?-O	5306-816-8057	A026 BOLT EXT REL: SAME AS A012	EA	6	REF	REF	REF	REF	24	6
?-O	5305-764-3013	A027 BOLT EXT RELIEVED BODY: SAME AS A019	EA	2	REF	REF	REF	REF	24	7

SECTION XII REPAIR PARTS FOR DIRECT SUPP(; (IERAL SUPPOR AND DEPOT MAINTENANCE (MX-1040A/ASN)

(1) SMR CODE	(2) FEDERAL STOCK NUMBER	DESCRIPTION / REFERENCE NUMBER & MFR CODE	USABLE ON CODE	(4) UNIT OF MEAS	(5) QTY C II NIT	(6) 30 (a) -2C	(6) (DS LOWA (b) 1-5C	(6) INT (c) 1-1C	(7) 30-((a) -20	(7) GS W OWANC (b) 1-50	(7) INT (c) -10	(8) I YI W PE EQUI NTGC	(9) EPOT AINT W PEI OO UIP	(10) ILLUSTRATIONS (a) FIG NO.	(10) (b) ITEM NO. OR REFERENCE DESIGNATION
		A001 ADAPTER KIT MAGNETIC COMPASS CALIBRATOR SET MX-1040A/ASN: 2592511 (07187) (This item is nonexpendable)												24	1
		A002 ADAPTER, COMPASS CALIBRATOR SET MX-8163/ASN: 2592710 (07187)		EA	1									24	21
AH-OS		A003 ADAPTER OPT MT: 2582952 (07187)		EA	1									24	22
X2-H		A004 CLAMP LOCKING: 1700916 (07187)		EA	1									24	24
X2-H		A005 LEG ADJUSTING: 1717135 (07187)		EA	1									24	26
X2-H		A006 LEG ALIGN EQUIP: 1717134 (07187)		EA	2									24	27
X2-H	5305-829-03	A007 SCREW MACH FH: CRES4-40X9-32 (70318)		EA	2									24	23
X2-H	5305-042-12(	A008 SCREW MACH FH: MS35250-71 (96906)		EA	2									24	25
X2-H	5305-042-12(	A009 SCREW MACH FH: MS35250-73 (96906)		EA	2									24	28
A-H		A010 ADAPTER, COMPASS CALIBRATOR MX-8166/ASN: 2592734-901 (07187)		EA	2									24	9
A-H		A011 ADAPTER OPT MT: 2592549-901 (07187)		EA	1									24	10
P-O	5306-816-80	A012 BOLT EXT REL: 1700924 (07187)		EA	4	2	3	5	2	2	2	89	5	24	11
A-H		A013 ADAPTER, COMPASS CALIBRATOR SET MX-8164/ASN (For UH-1): 2592721 (07187)		EA	1									24	12
A-H		A014 ADAPTER OPT MT: 2591979 (07187)		EA	1									24	13
P-O	5306-816-80	A015 BOLT EXT REL: SAME AS A012		EA	4	RE	REF	REF	REF	REF	REF	REF	EF	24	14
A-H		A016 ADAPTER, COMPASS CALIBRATOR SET MX-8162/ASN: 2592699 (07187)		EA	1									24	15
A-H		A017 ADAPTER OPT MT: 2591808 (07187)		EA	1									24	16
P-O	5306-816-80	A018 BOLT EXT REL: SAME AS A012		EA	2	RE	REF	REF	REF	REF	REF	REF	EF	24	17
P-O	5305-764-30	A019 BOLT EXT RELIEVED BODY: 2519197 (07187)		EA	2	*	2	2	*	2	2	33	5	24	18
A-H		A020 ADAPTER, COMPASS CALIBRATOR SET MX-8165/ASN (For OH-6A): 2592725 (07187)		EA	1									24	32
A-H		A021 ADAPTER OPT MT: 2592540 (07187)		EA	1									24	33

SECTION XII REPAIR PARTS FOR DIRECT SUPPORT, GENERAL SUPPORT, AND DEPOT MAINTENANCE (CONTINUED)

(1) SMR CODE	(2) FEDERAL STOCK NUMBER	(3) DESCRIPTION REFERENCE NUMBER & MFR. CODE	USABLE ON CODE	(4) UNIT OF MEAS	(5) QTY IN UNIT	(6) 30-DAY DS MAINT ALLOWANCE (a) -20	(b) -50	(c) -100	30-D (a) -20	GS DWA (b) -5	NT (c) -10	(8) YR (PE OUT TGC	(9) EPO MAINT WPE 100 QUIP	(a) FIG NO.	ITEM NO. OR REFERENCE DESIGNATION
P-O	306-816-80	A022 BOLT EXT REL: SAME AS A012		EA	4	REF	REF	REF	REF	REF	REF	REF	REF	24	34
A-H		A023 ADAPTER, COMPASS CALIBRATOR SET MX-8167/ASN: 2592738 (07187)		EA	1									24	29
A-H		A024 ADAPTER OPT MT: 2591796 (07187)		EA	1									24	30
P-O	305-764-30	A025 BOLT EXT RELIEVED BODY: SAME AS A019		EA	3	REF	REF	REF	REF	REF	REF	REF	REF	24	31
P-O	306-816-80	A026 BOLT EXT REL: SAME AS A012		EA	6	REF	REF	REF	REF	REF	REF	REF	REF	24	6
P-O	305-764-30	A027 BOLT EXT RELIEVED BODY: SAME ASA019		EA	2	REF	REF	REF	REF	REF	REF	REF	REF	24	7
H-H		A028 CABLE ASSY SPECIAL CX-10938/ASN (For C-12): 2581617 (07187)		EA	1									25	1
P-H	935-786-24	A029 CONN PLUG ELEC: PT01E14-18P (77820)		EA	1				*	2	2	19	14	25	2 (J1)
P-H	935-581-04	A030 CONN PLUG ELEC: 165-10 (02660)		EA	1				*	*	2	13	14	25	3 (P1)
H-R		A031 CABLE ASSY SPECIAL CX- 10934/ASN (For ML-1 FLUX VALVE) : 2582942 (07187)		EA	1									25	4 (W17)
P-H	940 -220-97	A032 CLIP SPG TENS: 45C (76545)		EA	6				2	2	3	53	7	25	6
P-H	935-542-90	A033 CONN PLUG ELEC: MS3106E14S6P (96906)		EA	1				*	*	2	13	14	25	5 (W17P1)
P-H	970- 370-39	A034 INSULATOR BUSHING: 47B (76545)		EA	2				*	2	2	13	6	25	7
P-H	97 0-370-39	A035 INSULATOR BUSHING: SAME AS A034		EA	REF				REF	RE	REF	REF	REF	25	8
P-H	975-105-30	A036 CABLE NIPPLE, ELECTRICAL: 47GREEN (76545)		EA	1				*	*	2	13	9	25	9
P-H	975-105-30	A037 CABLE NIPPLE, ELECTRICAL: 47 RED (76545)		EA	1				*	*	2	13	9	25	10
P-H	975-105-30	A038 CABLE NIPPLE, E LECTRICAL: 47WHITE (76545)		EA	1				*	*	2	13	9	25	11
P-H	975-105-30	A039 CABLE NIPPLE, ELECTRICAL: 47 YELLOW (76545)		EA	1				*	*	2	13	9	25	12
H-S		A040 CABLE ASSY SPECIAL CX-10939/ASN (For MA-1): 2587151 (07187)		EA	1									25	13 (W1)
P-H	970-940-91	A041 INSULATION SLEEVING: 208A042-3 (08795)		EA	2				*	2	2	19	36	25	16
P-H	935-062-40	A042 CONN PLUG ELEC: PT01A14-18P (77820)		EA	1				*	*	2	13	14	25	14 (W1J2)

SECTION XII REPAIR PARTS FOR DIRECT SUPPORT, GENERAL SUPPOR AND DEPOT MAINTENANCE (CONTINUED)

(1) SMR CODE	(2) FEDERAL STOCK NUMBER	(3) DESCRIPTION REFERENCE NUMBER & MFR. CODE	USABLE ON CODE	(4) UNIT OF MEAS	(5) QTY NC II UNIT	(6) 30-DAY DS MAINT ALLOWANCE (a) -2C	(b) 1-5C	(c) 1-1C	30- (a) 1-20	Y GS LOWA (b) 21-5	INT (c) 1-1	(8) I YI .W PE EQUI NTGC	(9) DEPO MAIN LW PI 100 QUI	(10) ILLUSTRATIONS (a) FIG NO	(b) ITEM NO. OR REFERENCE DESIGNATION
P-H	5935-883-0378	A043 CONN PLUG ELEC: PT01A16-26P (77820)		EA	1				*	2	2	19	14	25	15 (W1J1)
~~H-H-S~~		A044 CABLE ASSY SPECIAL CX-10940/ASN (For MA-1): 2587152 (07187)		EA	1									25	17
P-H	5970-940-9197	A045 INSULATION SLEEVING: SAME AS A041		EA	1				REI	REI	REI	RE F	REF	25	21 (W2)
P-H	5970-950-6331	A046 BOOT THERMOFIT: 208A053-3 (08795)		EA	2				*	2	2	19	12	25	22
P-H	5970-828-3452	A047 BOOT THERMOFIT: 202A153-3 (08795)		EA	3				*	2	2	33	50	25	23
P-H	5935 -883-0378	A048 CONN PLUG ELEC: SAME AS A043		EA	1				RE I	RE I	RE I	REF	REF	25	18 (W2J1)
P-H	5935-729-8802	A049 CONN PLUG ELEC: PT06A16-26S (77820)		EA	1				*	*	2	13	14	25	19 (W2P1)
P-H	5935-850-2618	A050 CONN PLUG ELEC: PT06A16-23P (77820)		EA	1				*	2	2	19	14	25	20 (W2P2)
P-H	5940-665-9580	A051 SPLICE CONDUCTOR: 34130 (00779)		EA	3				*	2	2	46	45	25	24 (W2BG1, W2BG2, W2BG3)
P-H	5970-923-7173	A052 TEE THERMOFIT: 301A022-3 (08795)		EA	1				*	2	2	19	5	25	25
~~H-H-S~~		A053 CABLE ASSY SPECIAL CX-10941/ASN (For MA-1): 2587153 (07187)		EA	1									25	26 (W3)
P-H	5970-940-9197	A054 INSULATION SLEEVING: SAME AS A041		EA	2				REI	REI	RE I	REF	REI	25	30
P-H	5970-104-4708	A055 INSULATION SLEEVING, ELECT: 228A042-3 (08795)		EA	1				*	2	2	19	12	25	32
P-H	5970-828-3452	A056 BOOT THE RMOFIT: SAME AS A047		EA	2				REI	RE I	RE I	RE F	RE F	25	31
P-H	5935-913-0767	A057 CONN PLUG ELEC: PT01A16-26PW (77820)		EA	1				*	*	2	13	14	25	27 (W3J1)
P-H	5935-803-3604	A058 CONN PLUG ELEC: PT06A16-26SW (77820)		EA	1				*	*	2	13	14	25	29 (W3P1)
P-H	5935-845-6764	A059 CONN PLUG ELEC: PT06A14-19P (77820)		EA	1				*	2	2	19	14	25	28 (W3P2)
P-H	6760-903-3283	A060 TRANSISTION, CABLE: 322A112-3 (08795)		EA	1				*	2	2	19	5	25	33
~~A-H-S~~		A061 CABLE ASSY SPECIAL CX-10937/ASN (For T-611 FLUX VALVE): 2591786 (07187)		EA	1									25	34 (W19)
P-H	5975-134-0957	A062 CLAMP CABLE: 2557509 (07187)		EA	1				*	*	*	5	9	25	36
P-H	5935-134-5284	A063 COVER ELEC CONN: 2582953 (07187)		EA	1				*	*	*	5	1	25	44
P-H	5935-133-3369	A064 HOUSING ELEC CONNECTOR: 2582955 (07187)		EA	1				*	*	*	5	1	25	38
P-H	5355-135-6698	A065 KNOB: 2557351 (07187)		EA	1				*	*	*	5	7	25	42

SECTION XII REPAIR PARTS FOR DIRECT SUPPORT, GENERAL SUPPOI AND DEI NT ANCE (CONTINUED)

(1) SMR CODI	(2) FEDERAL STOCK NUMBER	DESCRIPTION REFERENCE NUMBER & MFR. CODE	USABLE O CODE	(4) UNI OF MEA	(5) QTY NC UNI	(6) 30-DAY DS MAINT ALLOWANCE (a) 1-2	(b) 21-1	(c) 1-1	(7) 30 (a) 1-2	GS OWA (b) 1-5	(8) I Y WP EQU NTG	(9) DEPO MAINT LWPE 100 QUIF	(10) ILLUSTRATIONS (a) FI NC	(b) ITEM NO. OR REFERENCE DESIGNATION
X2-	5310-616-30	A066 NUT: MS35649-45 (96906)		EA	6								25	47
M-I		A067 POST ELECTRICAL: 2557353 (07187)		EA	3								25	39
X2-	5305-550-93	A068 SCREW MACH PANH: MS35229-12 (96906)		EA	1								25	40
X2-	5305-550-93	A069 SCREW MACH PANH: MS35229-15 (96906)		EA	6								25	45
X2-	5305-550-93	A070 SCREW MACH PANH: MS35229-3 (96906)		EA	6								25	37
X2-	5305-550-93	A071 SCREW MACH PANH: MS35229-6 (96906)		EA	2								25	35
P-H	5940-132-491	A072 TERMINAL BOARD: 2557352 (07187)		EA	1				*	*	5	9	25	48
X2-1	5310-045-52	A073 WASHER FLAT: MS15795-903 (96906)		EA	1								25	41
X2-1		A074 WASHER FLAT: 2503594-11 (07187)		EA	1								25	43
X2-1	5310-939-106	A075 WASHER LOCK: MS35335-71 (96906)		EA	6								25	46
M-H		A076 WIRING HARNESS, BRANCHED: 2592563 (07187)		EA	1								25	49
X2-1		A077 BUSHING RUBBER: AN3420- 4A (88044)		EA	2								25	52
X2-1		A078 BUSHING RUBBER: AN3420-6A (88044)		EA	1								25	53
P-H	5935-812-302	A079 CONN PLUG ELEC: PT06E14-18S (77820)		EA	1				*		13	14	25	50 (W19P1)
P-H	5935-754-872	A080 CONN PLUG ELEC: PT06E16-23P (77820)		EA	1				*		13	14	25	51 (W19P2)
P-H	5940-878-118	A081 FERRULE, ELECT, CONDUCTOR: D100 (08795)		EA	3				*		16	16	25	56 W19BS1, W19BS2, W19BS3)
P-H	5940-614-053	A082 TERMINAL LUG: MS35431-1 (96906)		EA	6				2		3	13	25	55
P-H	5970-908-500	A083 TEE THERMOFIT: 301A011-3 (08795)		EA	1				*		19		25	54
M-H		A084 CABLE ASSY SPECIAL PURPOSE, BRANCHED CX-10935/ASN: 2592647 (07187)		EA	1								25	57 (W13)
P-H	5935-104-120	A085 ADAPTER CONN TO CLAMP: G61474 (06324)		EA	1				*		3	2	25	25
P-H	5970-940-919	A086 INSULATION SLEEVING: SAME AS A041		EA	1				EF	EF	EF	EF	25	25
P-H	5970-104-470	A087 INSULATION SLEEVING, ELECT: SAME AS A055		EA	1				EF	EF	EF	EF	25	63
X2-H	5340-598-528	A088 BUSHING RUBBER: AN3420- 12A (88044)		EA	1								25	68

SECTION XII REPAIR PARTS FOR DIRECT SUPPORT, GENERAL SUPPORT, AND DEPOT MAINTENANCE (CONTINUED)

(1) SMR CODE	(2) FEDERAL STOCK NUMBER	(3) DESCRIPTION REFERENCE NUMBER & MFR. CODE / USABLE ON CODE	(4) UNIT OF MEAS	(5) QTY INC IN UNIT	(6) 30-DAY DS MAINT ALLOWANCE (a) 1-20	(b) 21-50	(c) 51-100	(7) 30-DAY GS MAINT ALLOWANCE (a) 1-20	(b) 21-50	(c) 51-100	(8) 1 YR ALW PER EQUIP CNTGCY	(9) DEPOT MAINT ALW PER 100 EQUIP	(10) ILLUSTRATIONS (a) FIG NO.	(b) ITEM NO. OR REFERENCE DESIGNATION
X2-H		A089 BUSHING RUBBER: AN3420-8A (88044)	EA	1									25	61
P-H	5935-104-3494	A090 CLAMP CABLE, ELECT, CONN: 10-15 0980-205 (77820)	EA	1				*	*	2	13	9	25	60
P-H	5935-845-6764	A091 CONN PLUG ELEC: SAME AS A059	EA	1				REF	REF	REF	REF	REF	25	62 (W13P3)
P-H	5935-850-2618	A092 CONN PLUG ELEC: SAME AS A050	EA	1				REF	REF	REF	REF	REF	25	64 (W13P2)
P-H	5935-897-9834	A093 CONN PLUG ELEC: 1406-555Q (77820)	EA	1				*	*	2	13	14	25	66 (W13P1)
P-H	5935-104-1306	A094 CONN RECP ELEC: CA102356-1 (08718)	EA	1				*	*	2	13	14	25	58 (W13J1)
P-H	5940-878-1180	A095 FERRULE, ELECT, CONDUCTOR: SAME AS A081	EA	1				REF	REF	REF	REF	REF	25	69 (W13BS1)
P-H	5935-472-9526	A096 SHLD ELEC CONN: 14064 (95238)	EA	1				*	*	2	13	3	25	67
P-H	6605-179-8843	A097 CABLE ASSY, SPECIAL PURPOSE CX-10936/ASN	EA	1				*	*	*	5	3	25	70 (W18)
P-H	5935-786-2468	A098 CONN PLUG ELEC: SAME AS A029	EA	1				REF	REF	REF	REF	REF	25	71 (W18J1)
X1-H		A099 TERMINAL LUG: 2519933 (07187)	EA	6									25	72
X1-H		A100 CASE ASSEMBLY ADAPTER KIT CY-6508/ASN: 2592747 (07187)	EA	1									24	36
X1-H		A101 CASE TRANSIT: D21942 (98376)	EA	1									24	37
X1-H		A102 PAD CUSHIONING: 2557517 (07187)	EA	1									24	41
X1-H		A103 PAD CUSHIONING: 2592717 (07187)	EA	1									24	40
X1-H		A104 PAD CUSHIONING: 2592718 (07187)	EA	1									24	38
X1-H		A105 PAD CUSHIONING: 2592719 (07187)	EA	1									24	39
X1-H		A106 CHART LIST OF CONTENTS: 2592779 (07187)	EA	1									24	4
X1-H		A107 CONTAINER HARDWARE: 1POLYCON (10066)	EA	1									24	8
X2-H		A108 LEG SET: 2557345 (07187)	EA	1									24	35
X1-H		A109 PLATE IDENT: 2500445 (07187)	EA	1									24	3
X2-H	6605-044-1960	A110 MOUNTING PLATE, TRANSMITTER MX-8112A/ASM-339(V)	EA	1									24	5
X2-H	5305-253-5606	A111 SCREW: MS21318-7 (96906)	EA	4									24	2
P-H	5365-178-8221	A112 SPACER SLEEVE: 2557364 (07187)	EA	2				*	*	*	10	12	24	19

SECTION XII REPAIR PARTS FOR DIRECT ?P(GENERAL SUPPOR' ıND DEPOT MAINTENANC(CONTINUED)

(1) SMR ODE	(2) FEDERAL STOCK NUMBER	(3) DESCR IPT ION / EFERENCE NUMBER & MFR. CODE	USABLE ON CODE	4) NIT OF EAS	5) TY :II IIT	30-DAY DS ALLOW a) -2C	b) -5C	NT c) :10	30-I a) :20	GS WAN b) -5C	NT c) -10	8) YE VPE QUI TGC'	9) POT INT IPE IO JIP	(10) LLUSTRAT IONS a) IG O.	(b) ITEM NO. OR REFERENCE DESIGNATION
-H	65-178-795	ı113 SPACER SLEEVE, ANGULAR: 2557365 (07187)		:A						F	*	10	2	4	20

SECTION XIV INDEX-FEDERAL STOCK NUMBER CROSS REFERENCE TO FIGURE AND ITEM NUMBER OR REFERENCE DESIGNATION MX-1040A/ASN

CALIBRATOR SET MX-1040A/ASN

FEDERAL STOCK	FIGURE NUMBER	ITEM NUMBER OR REF. DESIGNATION
5305-042-1205	24	25
5305-042-1207	24	28
5305-253-5606	24	2
5305-550-9328	25	45
5305-550-9331	25	40
5305-550-9335	25	37
5305-550-9338	25	35
5305-764-3013	24	7
5305-764-3013	24	18
5305-764-3013	24	31
5305-829-0375	24	23
5306-816-8057	24	6
5306-816-8057	24	11
5306-816-8057	24	14
5306-816-8057	24	17
5306-816-8057	24	34
5310-045-5202	25	41
5310-616-3092	25	47
5310-939-1063	25	46
5340-598-5287	25	68
5355-135-6698	25	42
5365-178-7954	24	20
5365-178-8221	24	19
5935-062-4016	25	14 (W1J2)
5935-104-1200	25	25
5935-104-1306	25	58 (W13J1)
5935-104-3494	25	60
5935-133-3369	25	38
5935-134-5284	25	44
5935-472-9526	25	67
5935-542-9012	25	5 (W17P1)
5935-581-0422	25	3 (P1)
5935-754-8726	25	51 (W19P2)
5935-786-2468	25	2 (J1)
5935-786-2468	25	71 (W18J1)
5935-803-3604	25	29 (W3P1)
5935-812-3021	25	50 (W19P1)
5935-845-6764	25	28 (W3P2)
5935-845-6764	25	62 (W13P3)
5935-850-2618	25	20 (W2P2)
5935-850-2618	25	64 (W13P2)
5935-883-0378	25	15 (W1J1)
5935-883-0378	25	18 (W2J1)
5935-897-9834	25	66 (W13P1)
5935-913-0767	25	27 (W3J1)
5940-132-4910	25	48
5940-220-9775	25	6
5940-614-0537	25	55
5940-665-9580	25	24 (W2BG1)
5940-665-9580	25	24 (W2BG2)
5940-665-9580		24 (W2BG3)
5940-878-1180	25	56 (W19BS1)
5940-878-1180	25	56 (W19BS2)
5940-878-1180	25	56 (W19BS3)
5940-878-1180	25	69 (W13BS1)
5970-104-4708	25	32
5970-104-4708	25	63
5970-370-3969	25	7
5970-370-3969	25	8
5970-828-3452	25	23
5970-828-3452	25	31
5970-908-5002	25	54
5970-923-7173	25	25
5970-940-9197	25	16
5970-940-9197	25	21 (W2)
5970-940-9197	25	30
5970-940-9197	25	25
5970-950-6331	25	22
5975-105-3094	25	9
5975-105-3095	25	10
5975-105-3096	25	11
5975-105-3097	25	12
5975-134-0957	25	36
6605-044-1960	24	5
6605-179-8843	25	70 (W18)
6605-815-9957	25	57 (W13)
6760-903-3283	25	33

Reference No.	Mfg. Code	Fig. No.	Ref. Desig.
AN3420-4A	88044	25	52
AN3420-6A	88044	25	53
AN3420-8A	88044	25	61
D21942	98376	24	37
1POLYCON	10066	24	8
1700916	07187	24	24
1717134	07187	24	27
1717135	07187	24	26
2500445	07187	24	3
2503594-11	07187	25	43
2519933	07187	25	72

SECTION XIV INDEX-FEDERAL STOCK NUMBER CROSS REFERENCE TO FIGURE AND ITEM NUMBER OR REFERENCE DESIGNATION MX-1040A/ASN

Reference No.	Mfg. Code	Fig. No.	Ref. Desig.
2557345	07187	24	35
2557353	07187	25	39
2557517	07187	24	41
2581617	07187	25	1
2582942	07187	25	4 (W17)
2582952	07187	24	22
2587151	07187	25	13 (W1)
2587152	07187	25	17
2587153	07187	25	26 (W3)
2591786	07187	25	34 (W19)
2591796	07187	24	30
2591808	07187	24	16
2591979	07187	24	13
2592511	07187	24	1
2592540	07187	24	33
2592549-901	07187	24	10
2592563	07187	25	49
2592699	07187	24	15
2592710	07187	24	21
2592717	07187	24	40
2592718	07187	24	38
2592719	07187	24	39
2592721	07187	24	12
2592725	07187	24	32
2592734-901	07187	24	9
2592738	07187	24	29
2592747	07187	24	36
2592779	07187	24	4

Reference No.	Mfg. Code	Fig. No.	Ref. Desig.

SECTION XV. INDEX-REFERENCE DESIGNATION

CROSS REFERENCE TO PAGE NUMBER (CONTINUED) MX-1040A/ASN

REFERENCE DESIGNATION	PAGE NUMBER	REFERENCE DESIGNATION	PAGE NUMBER	REFERENCE DESIGNATION	PAGE NUMBER
J1	C-62				
P1	C-62				
W1	C-62				
W1J1	C-63				
W1J2	C-62				
W2	C-63				
W2BG1	C-63				
W2BG2	C-63				
W2BG3	C-63				
W2J1	C-63				
W2P1	C-63				
W2P2	C-63				
W3	C-63				
W3J1	C-63				
W3P1	C-63				
W3P2	C-63				
W13	C-64				
W13BS1	C-65				
W13J1	C-65				
W13P1	C-65				
W13P2	C-65				
W13P3	C-65				
W17	C-62				
W17P1	C-62				
W18	C-65				
W18J1	C-65				
W19	C-63				
W19BS1	C-64				
W19BS2	C-64				
W19BS3	C-64				
W19P1	C-64				
W19P2	C-64				

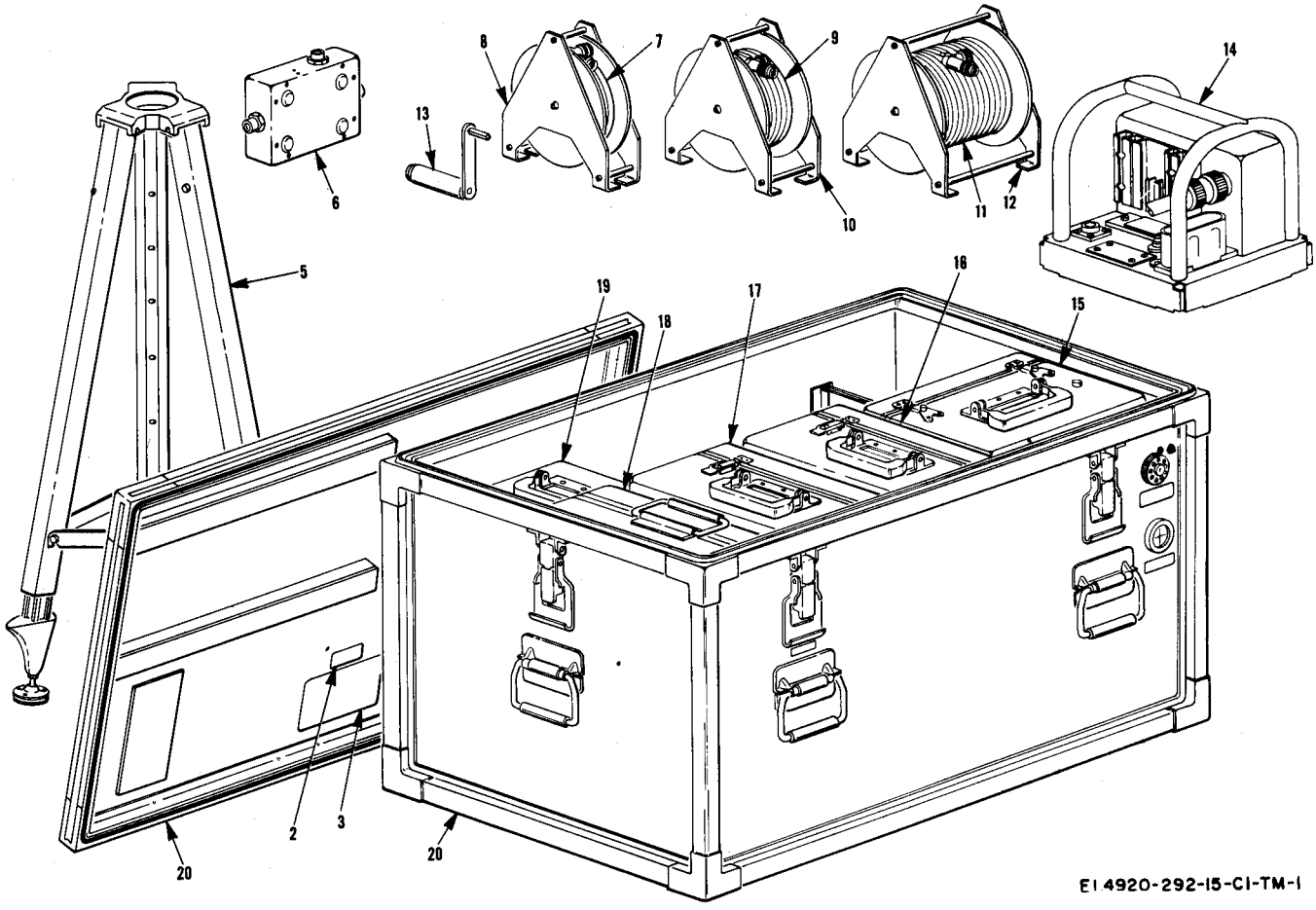

Figure 1. MC-2 magnetic compass calibration set.

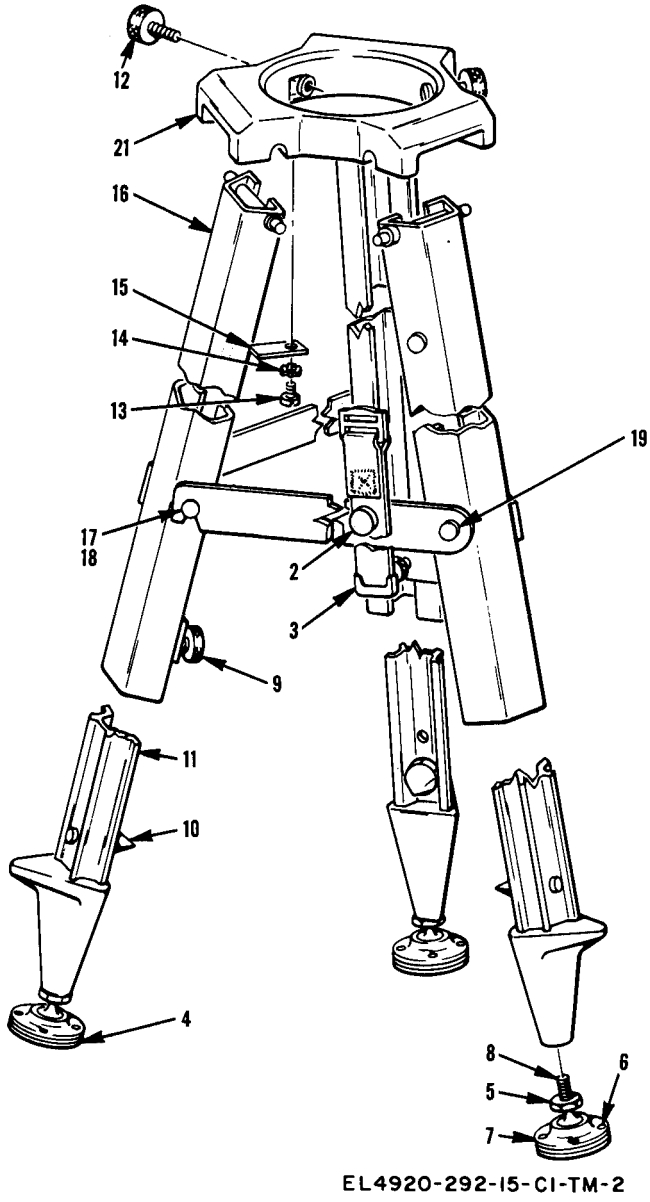

Figure 2. Electronic equipment tripod.

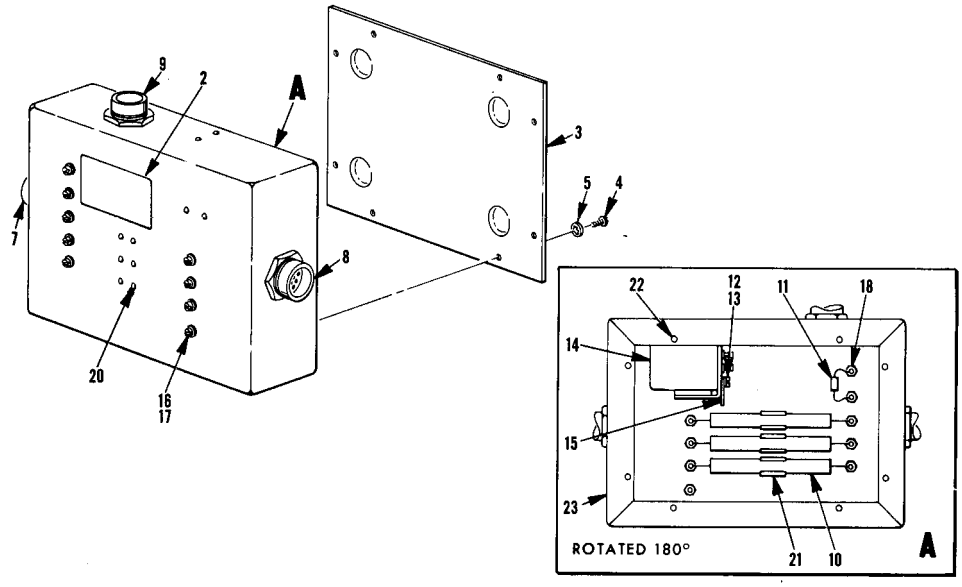

EL4920-292-15-CI-TM-3

Figure 3. Interconnecting box.

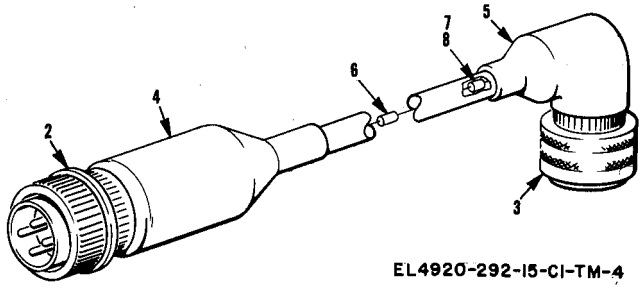

EL4920-292-15-CI-TM-4

Figure 4. Electrical special purpose cable assembly.

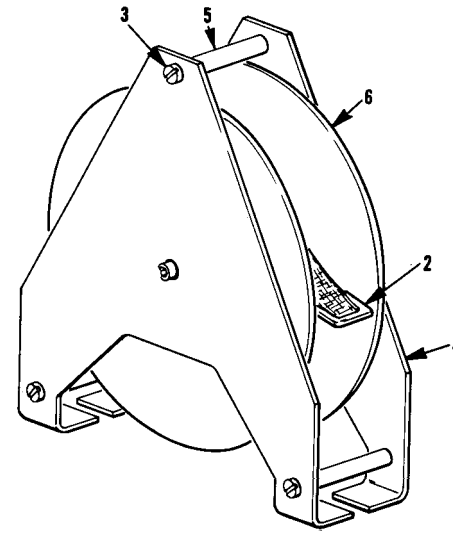

EL4920-292-15-CI-TM-5

Figure 5. Cable reel.

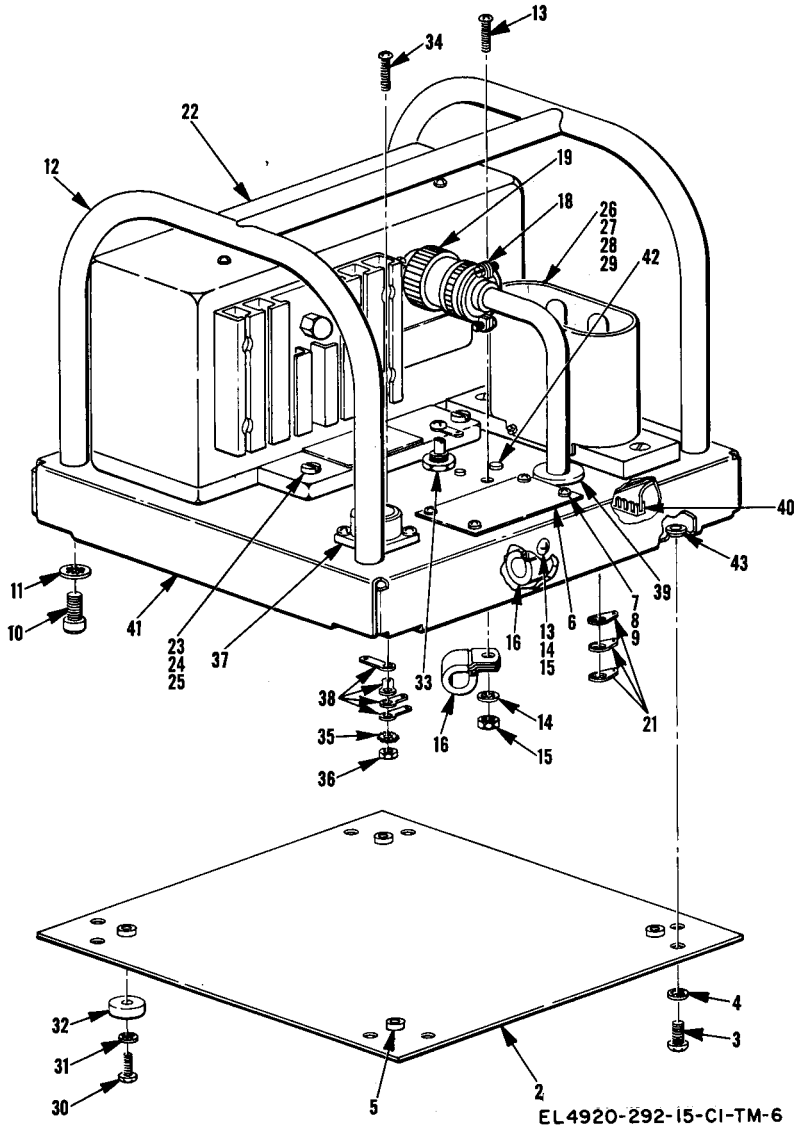

Figure 6. Power supply.

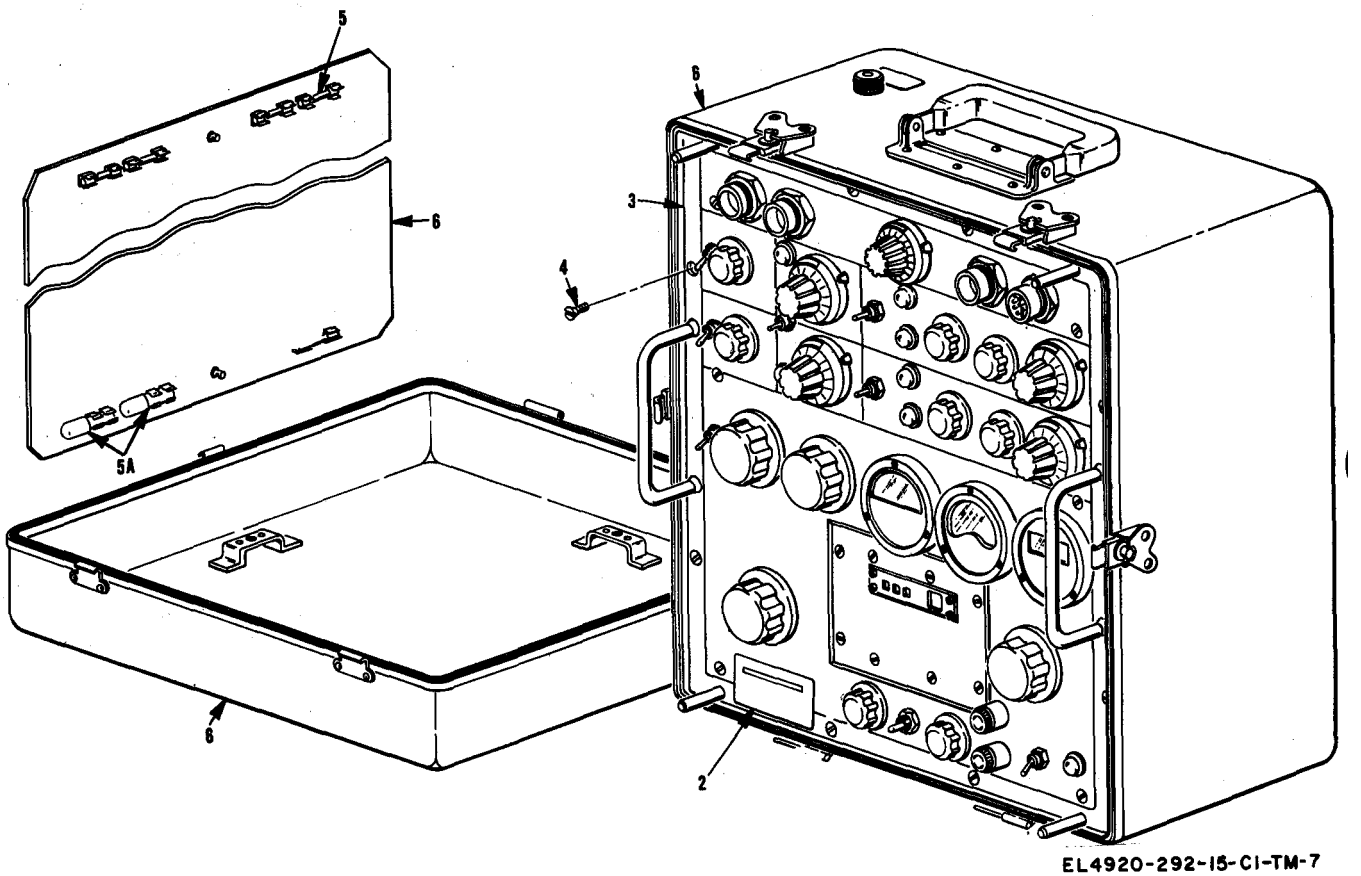

Figure 7. Magnetic compass control.

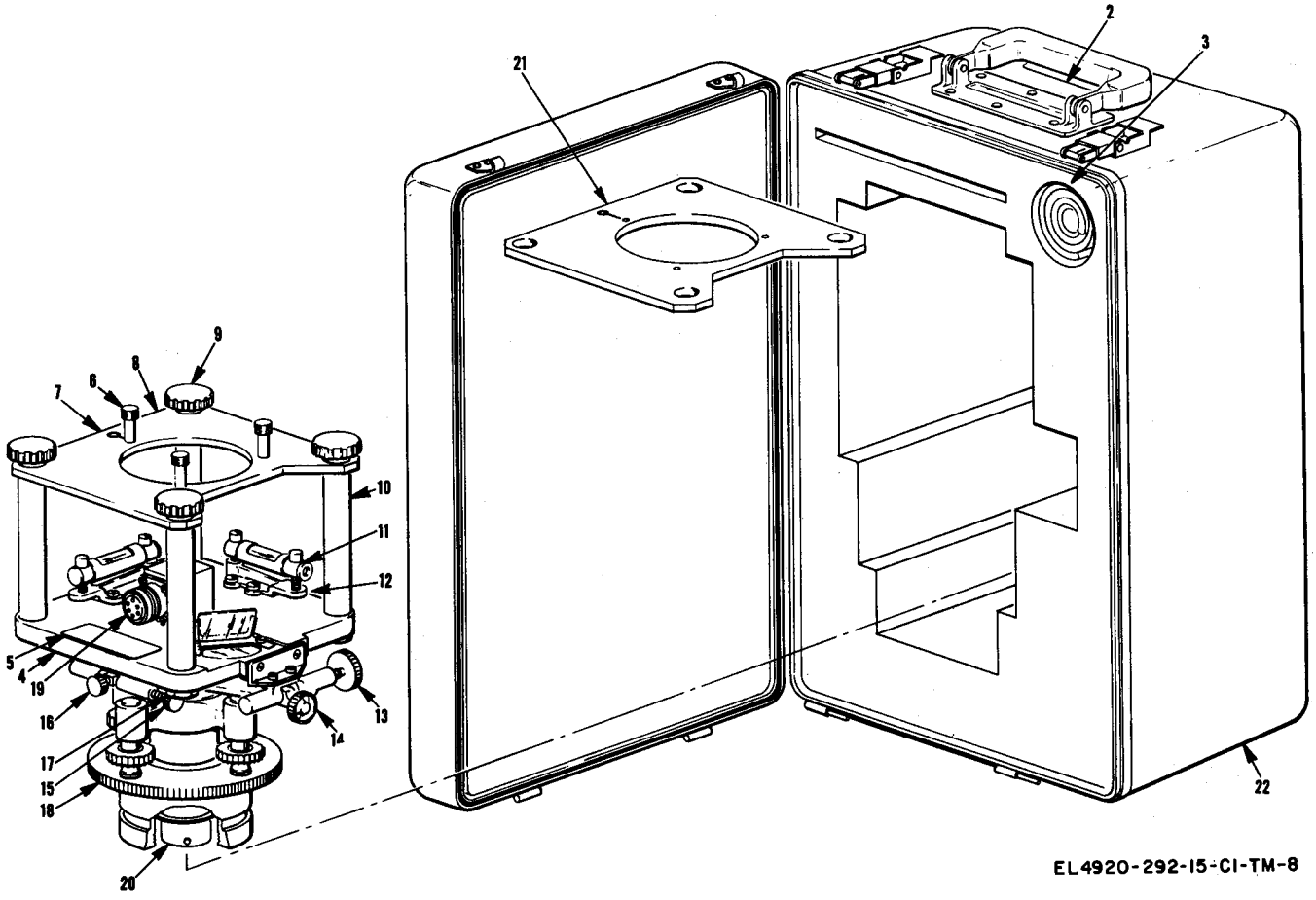

Figure 8. Remote transmitter turntable group.

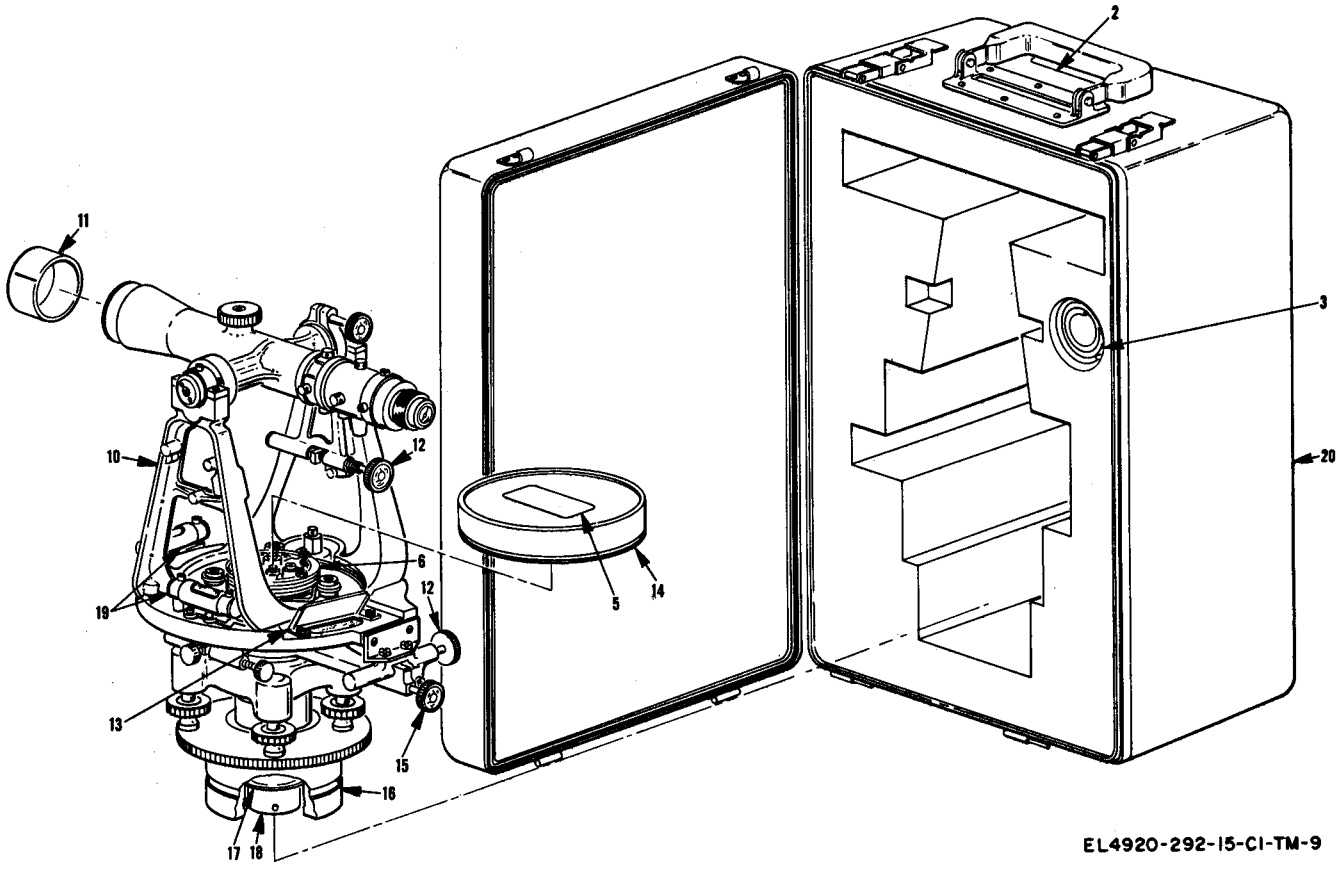

Figure 9. Magnetic field monitor.

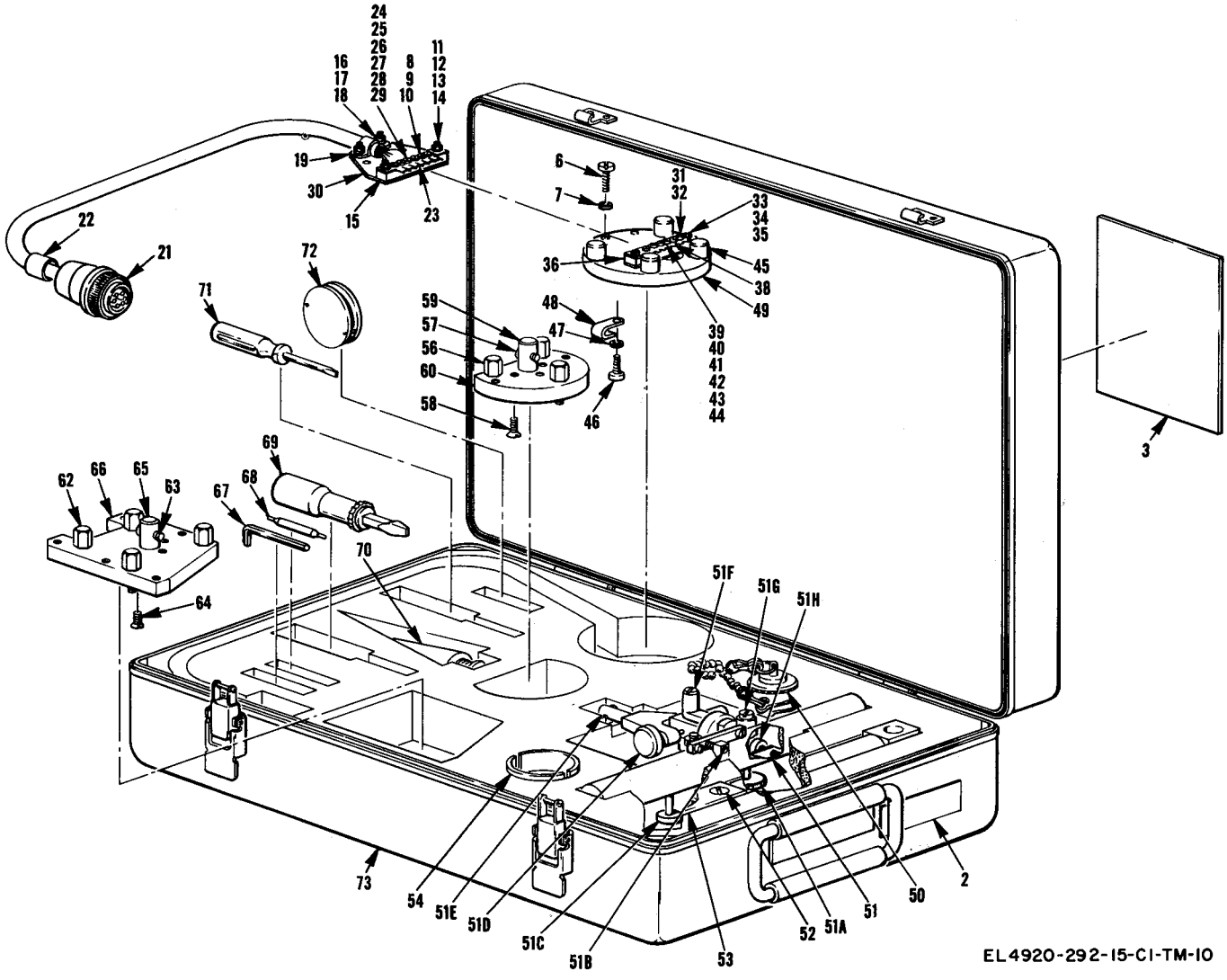

Figure 10. Electronic equipment alignment kit.

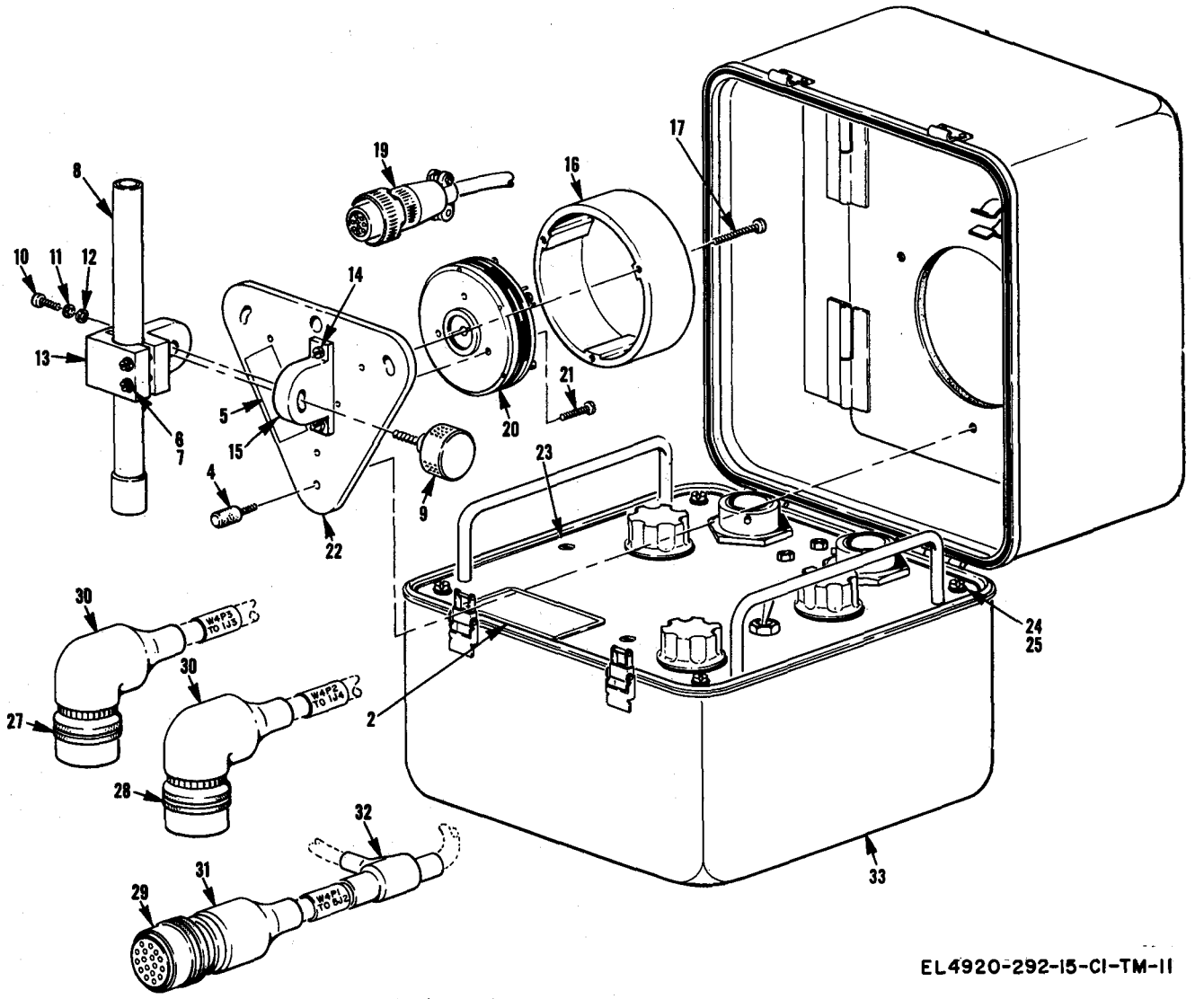

Figure 11. Magnetic compass calibrator field tester.

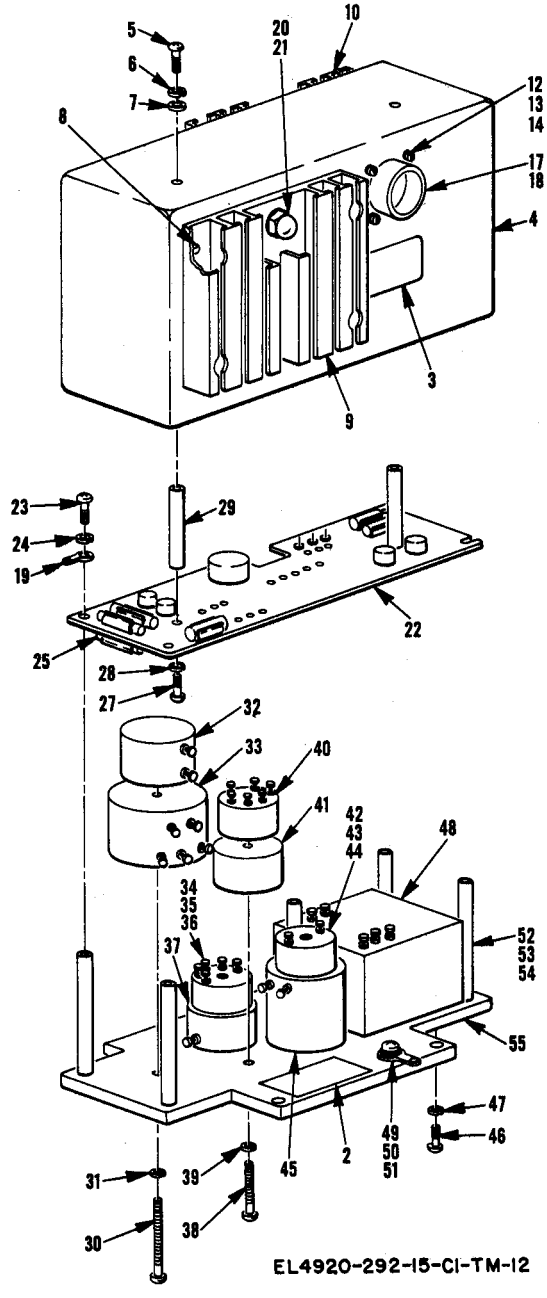

Figure 12. Static power inverter.

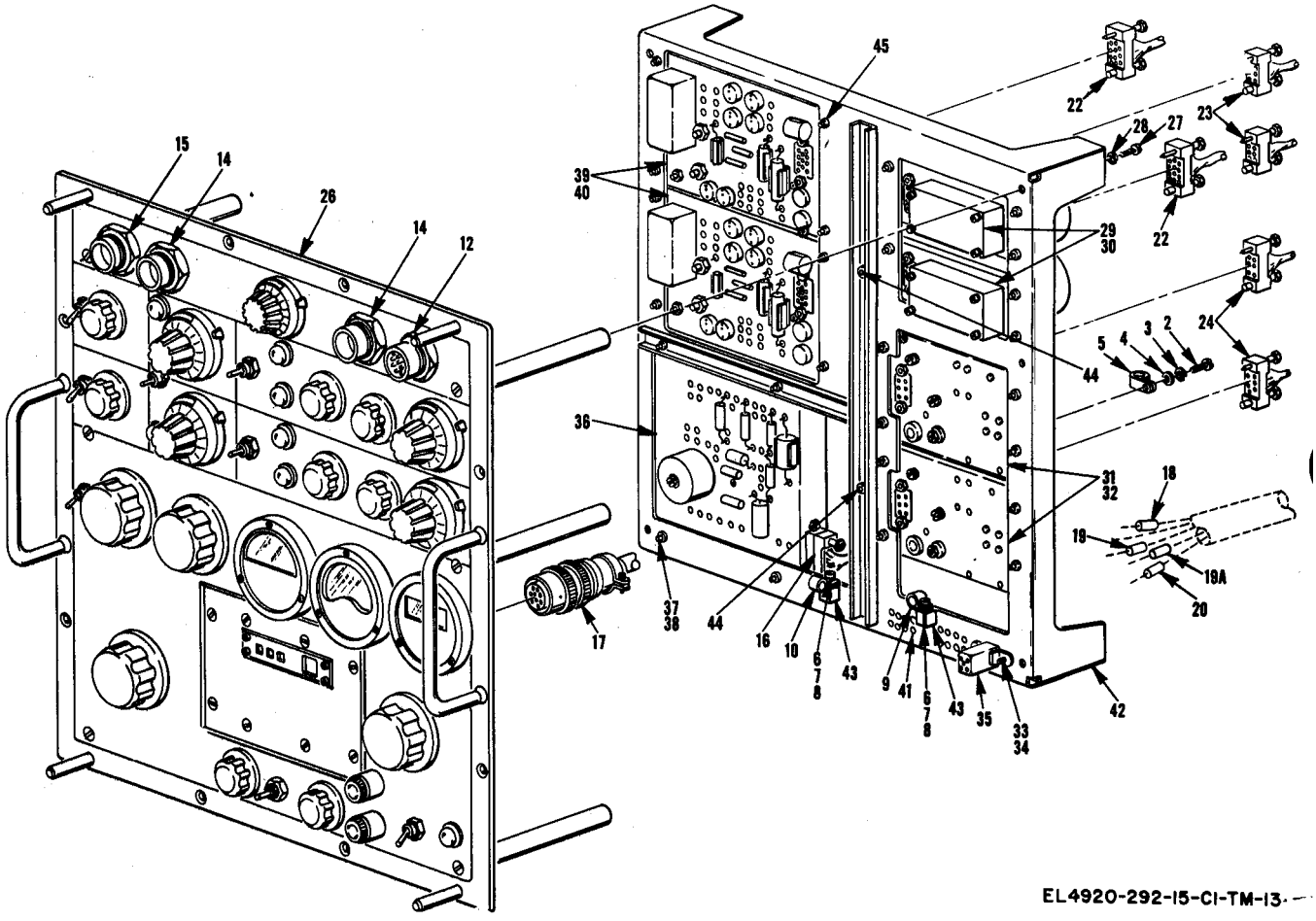

Figure 13. Panel and rack assembly.

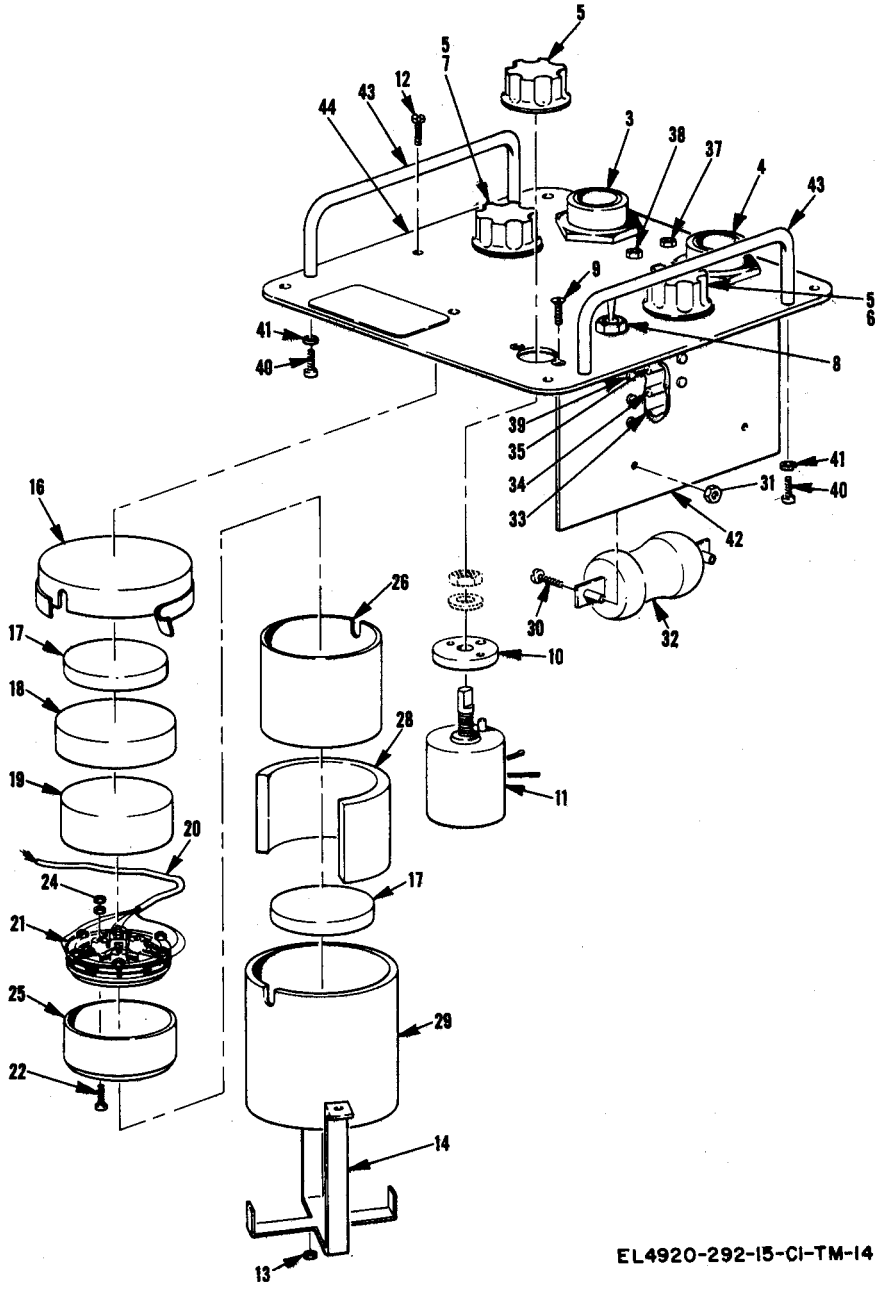

Figure 14. Electrical test panel.

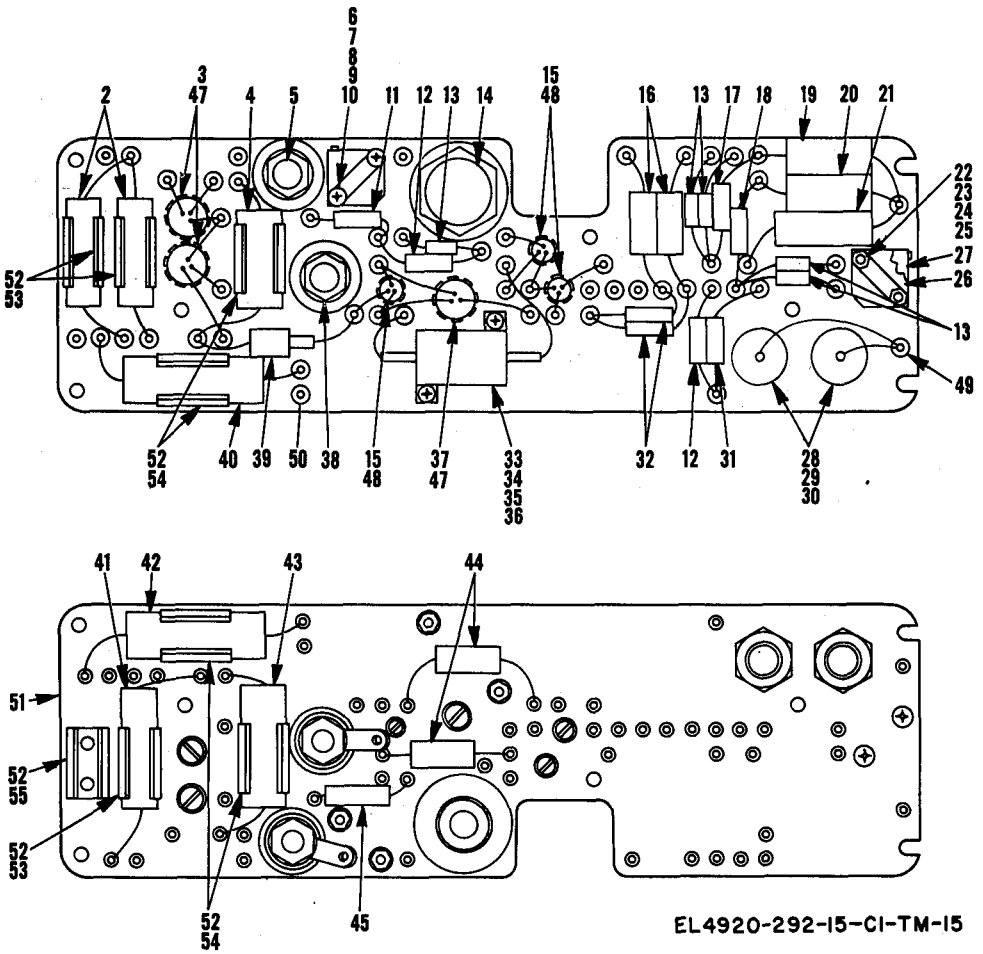

Figure 15. Electronic components assembly.

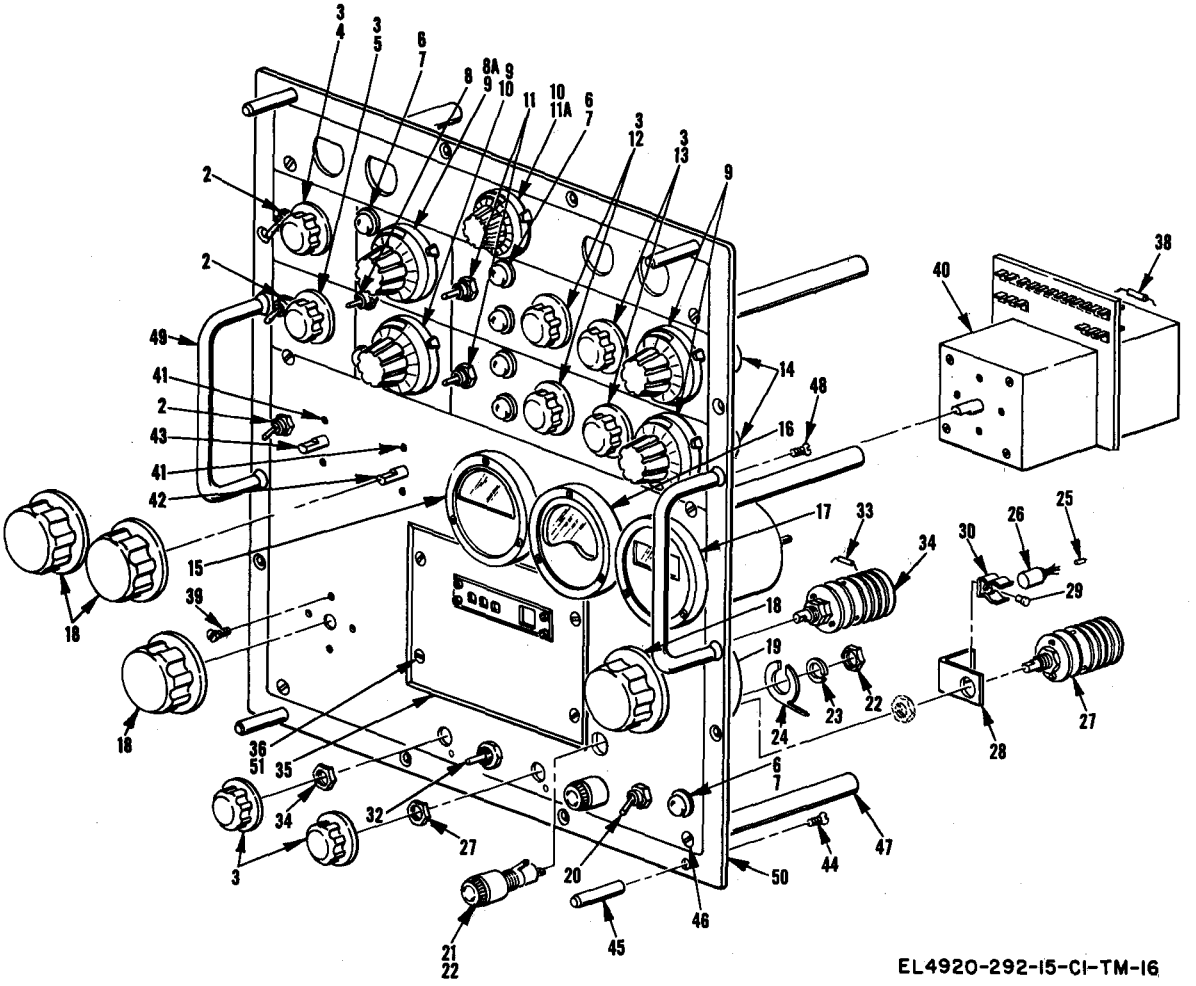

Figure 16. Control console panel assembly.

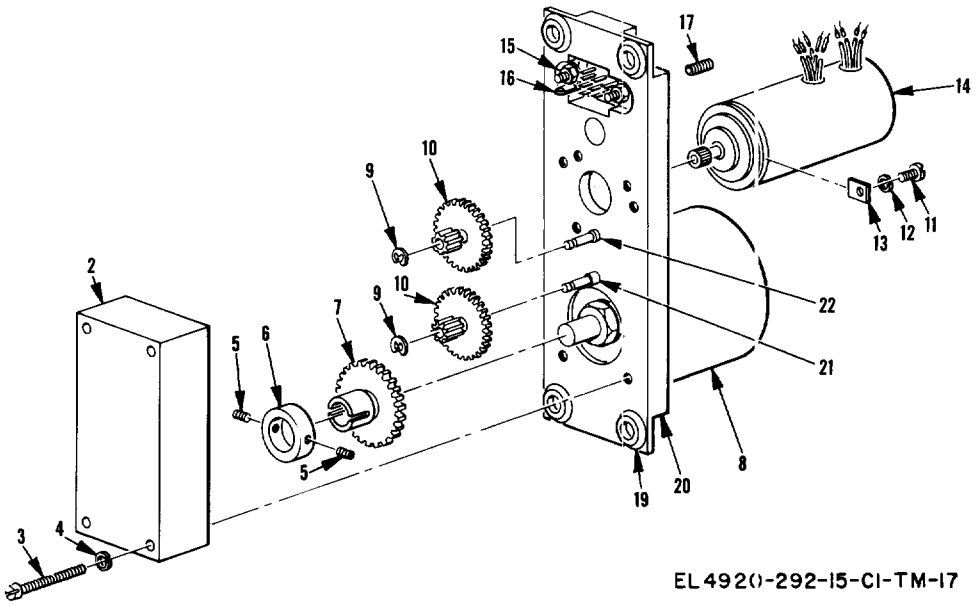

Figure 17. Gearcase—motor.

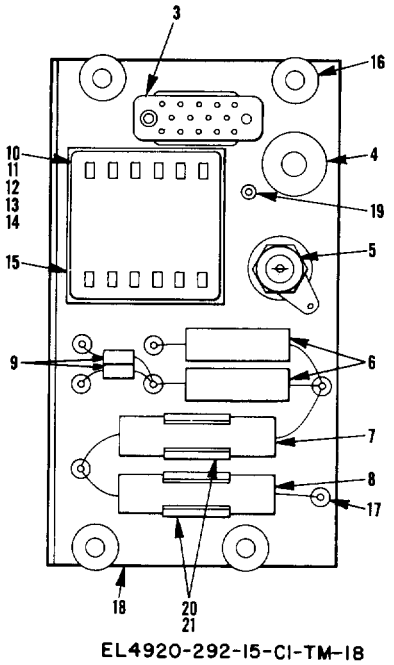

Figure 18. Supply regulator.

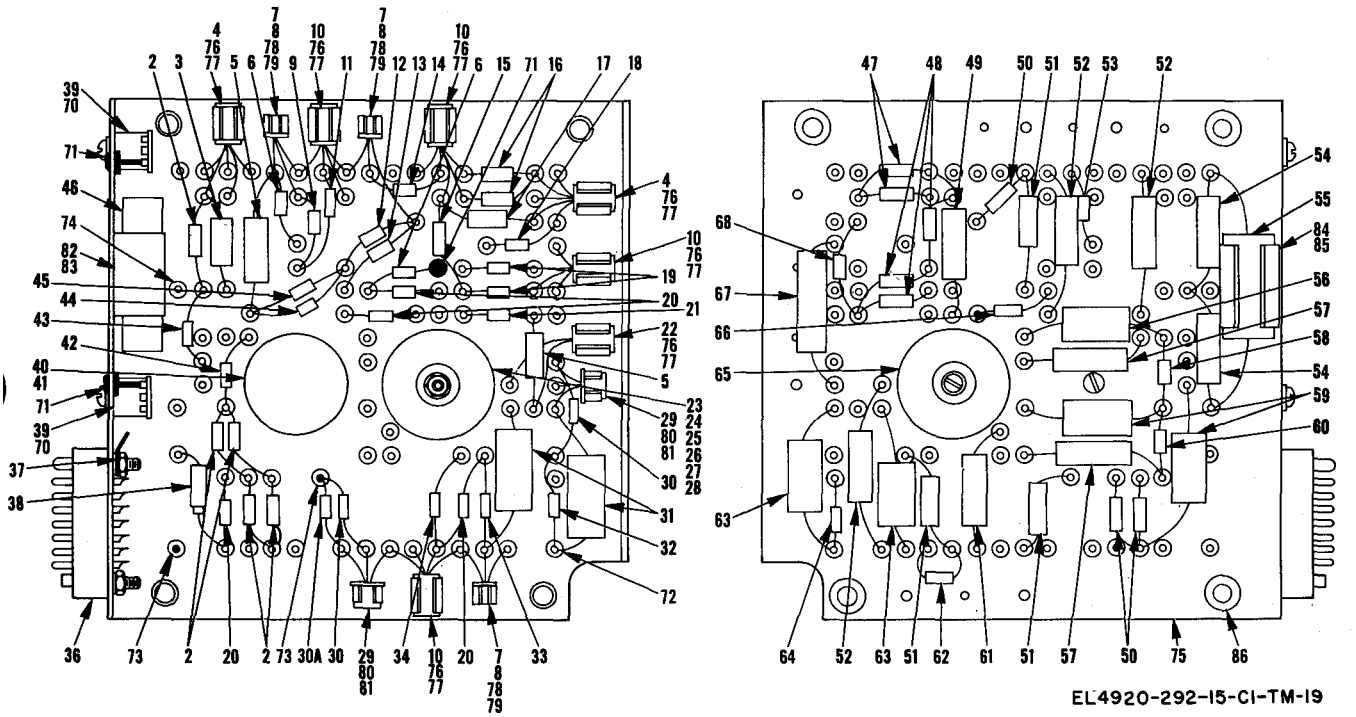

Figure 19. Electronic control amplifier.

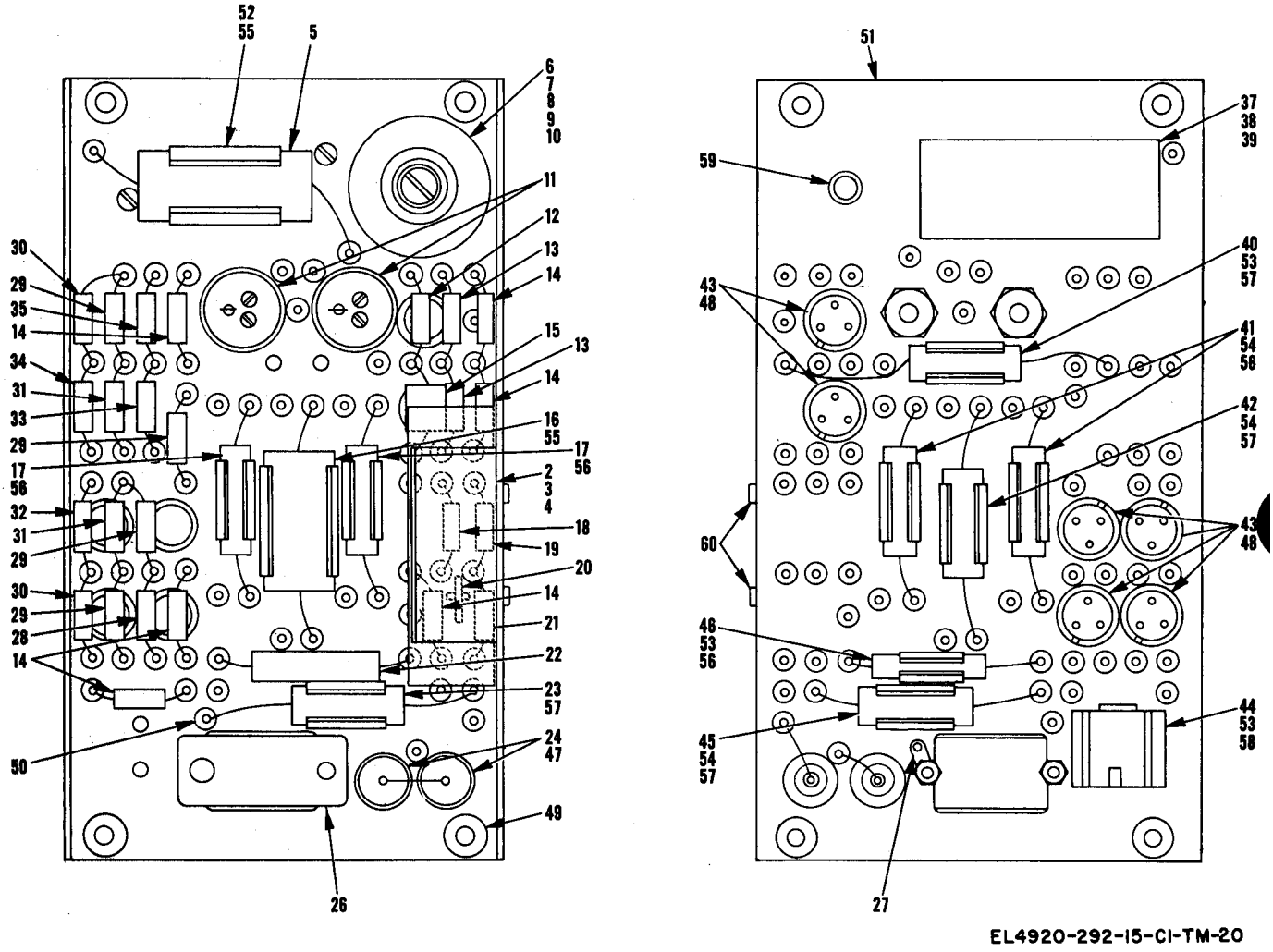

Figure 20. Regulator amplifier.

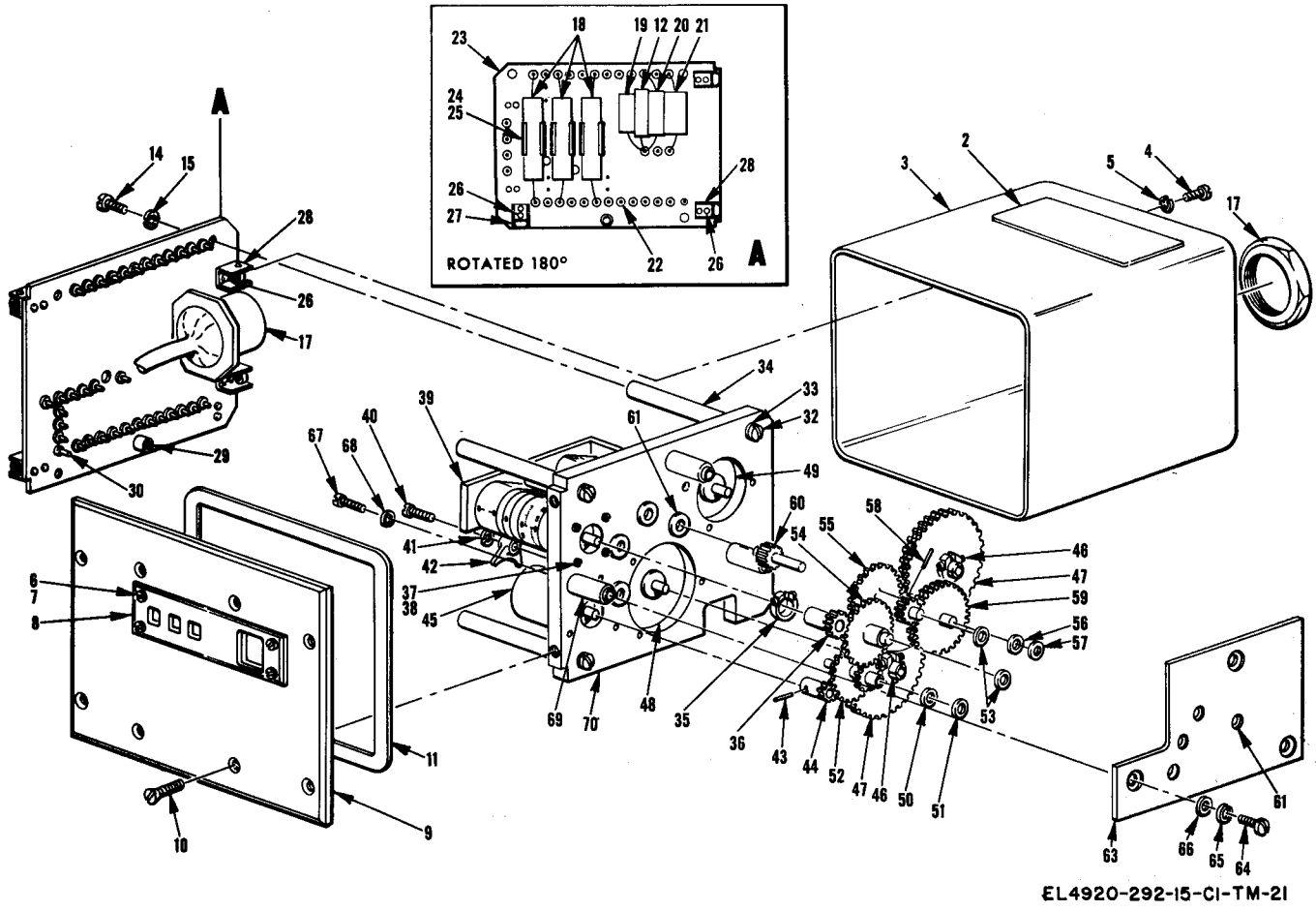

Figure 21. Heading indicator.

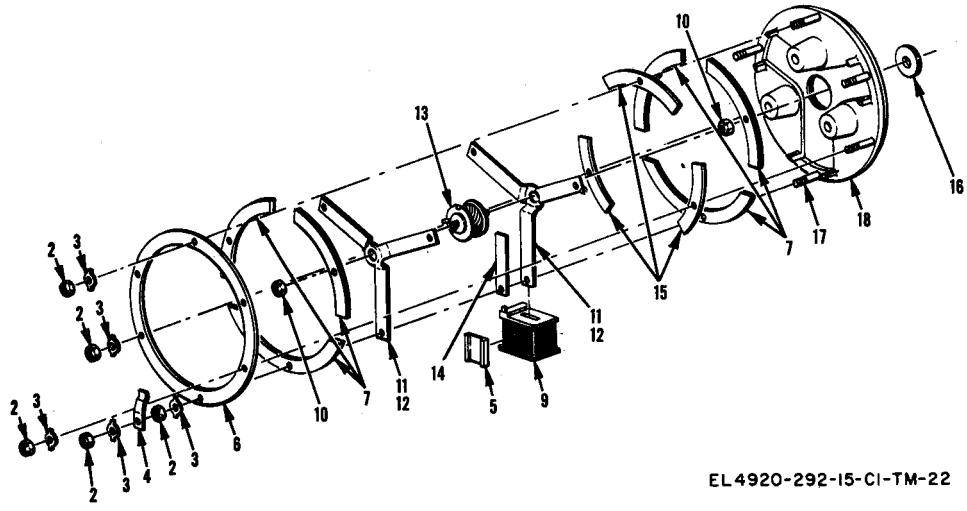

Figure 22. Transmitter valve assembly.

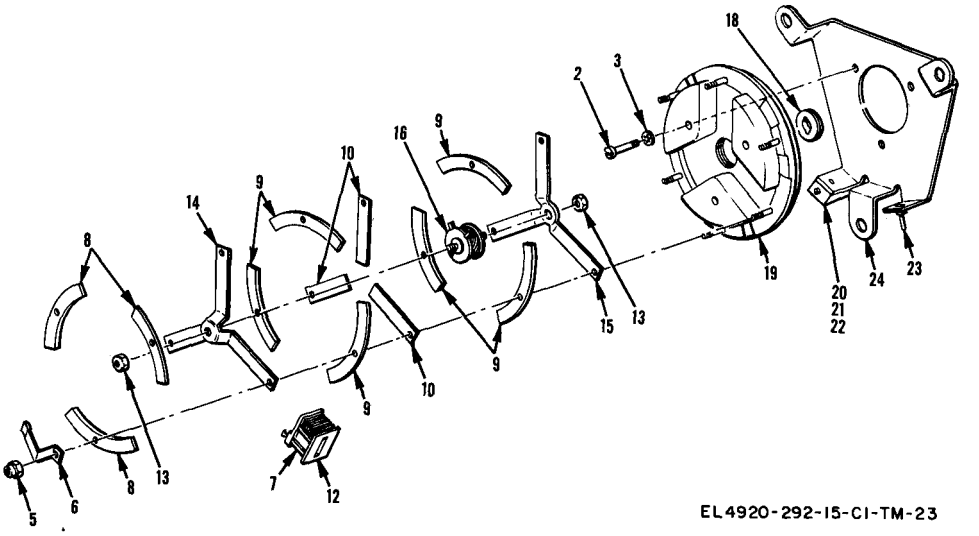

Figure 23. Mount-valve plate assembly.

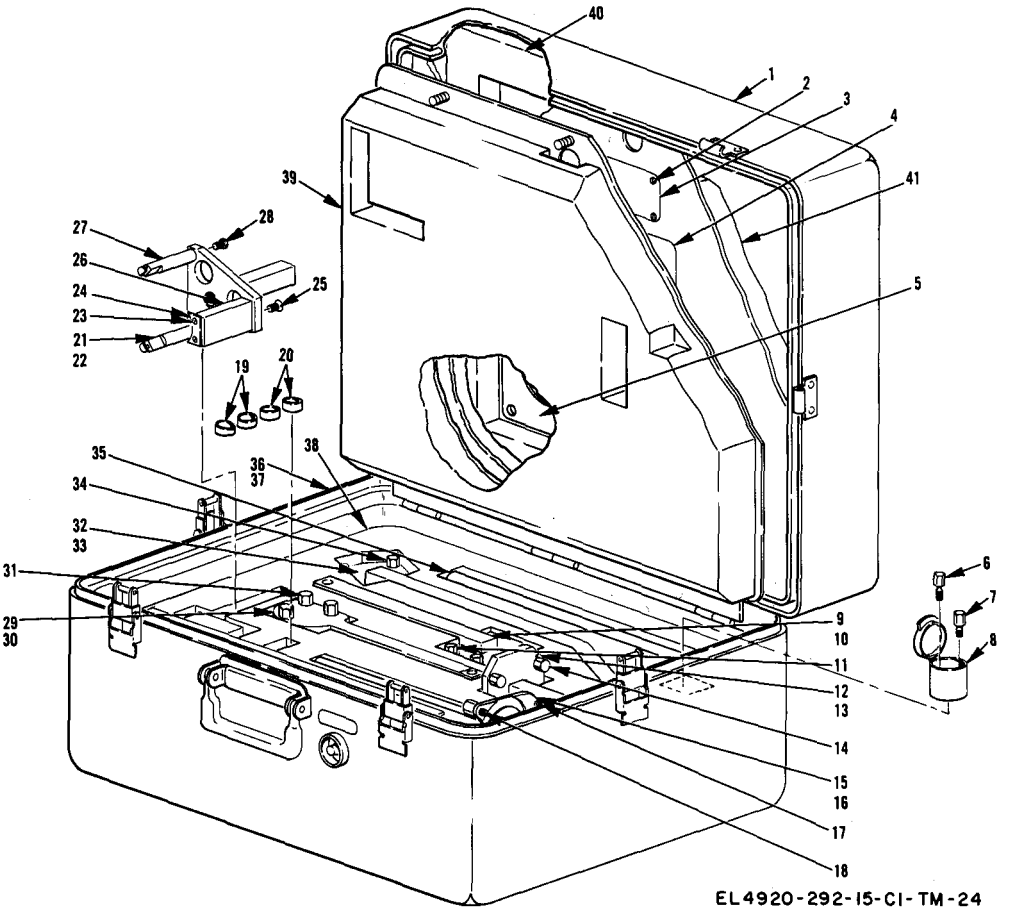

Figure 24. Magnetic compass calibrator set.

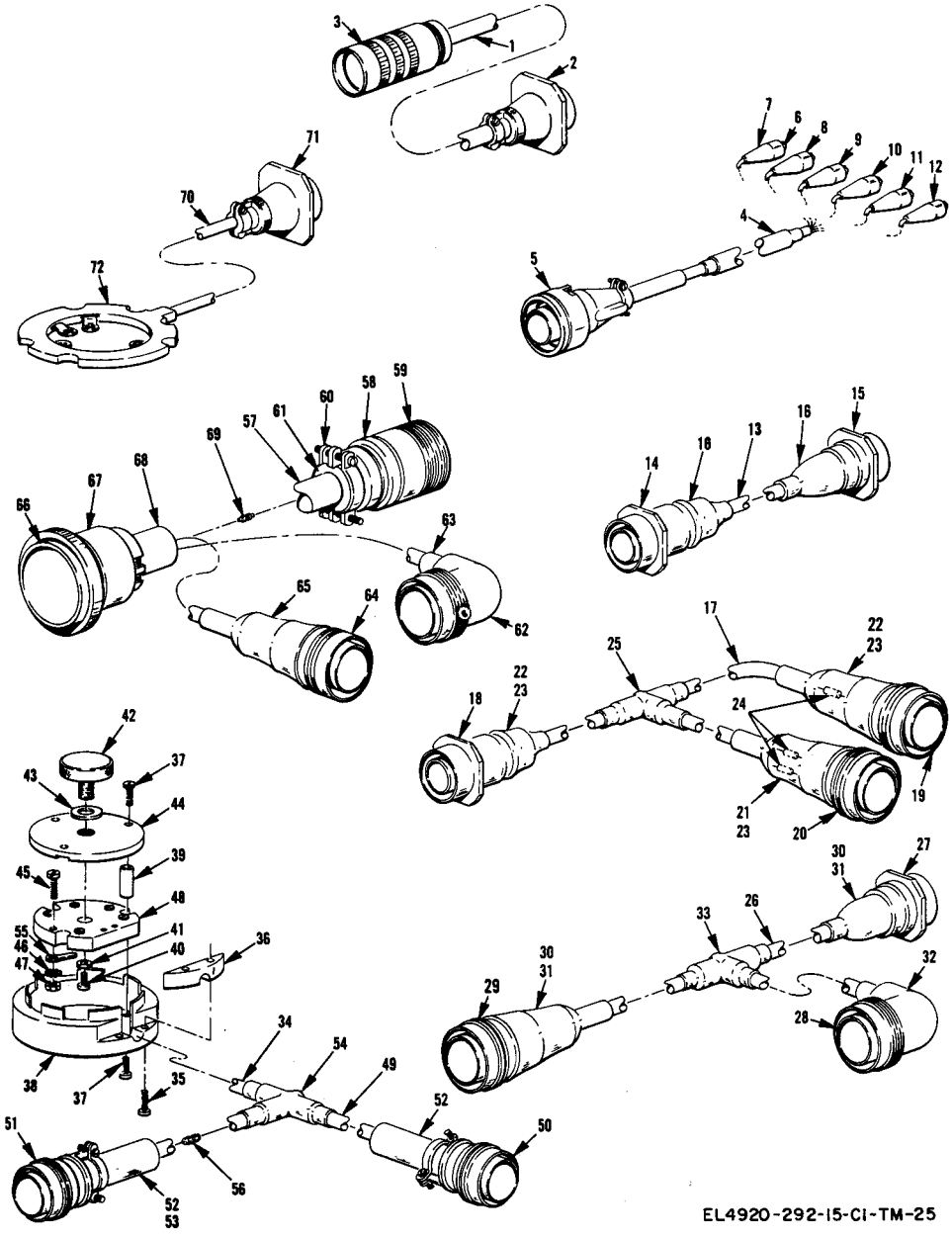

Figure 25. Adapter kit cable assemblies.

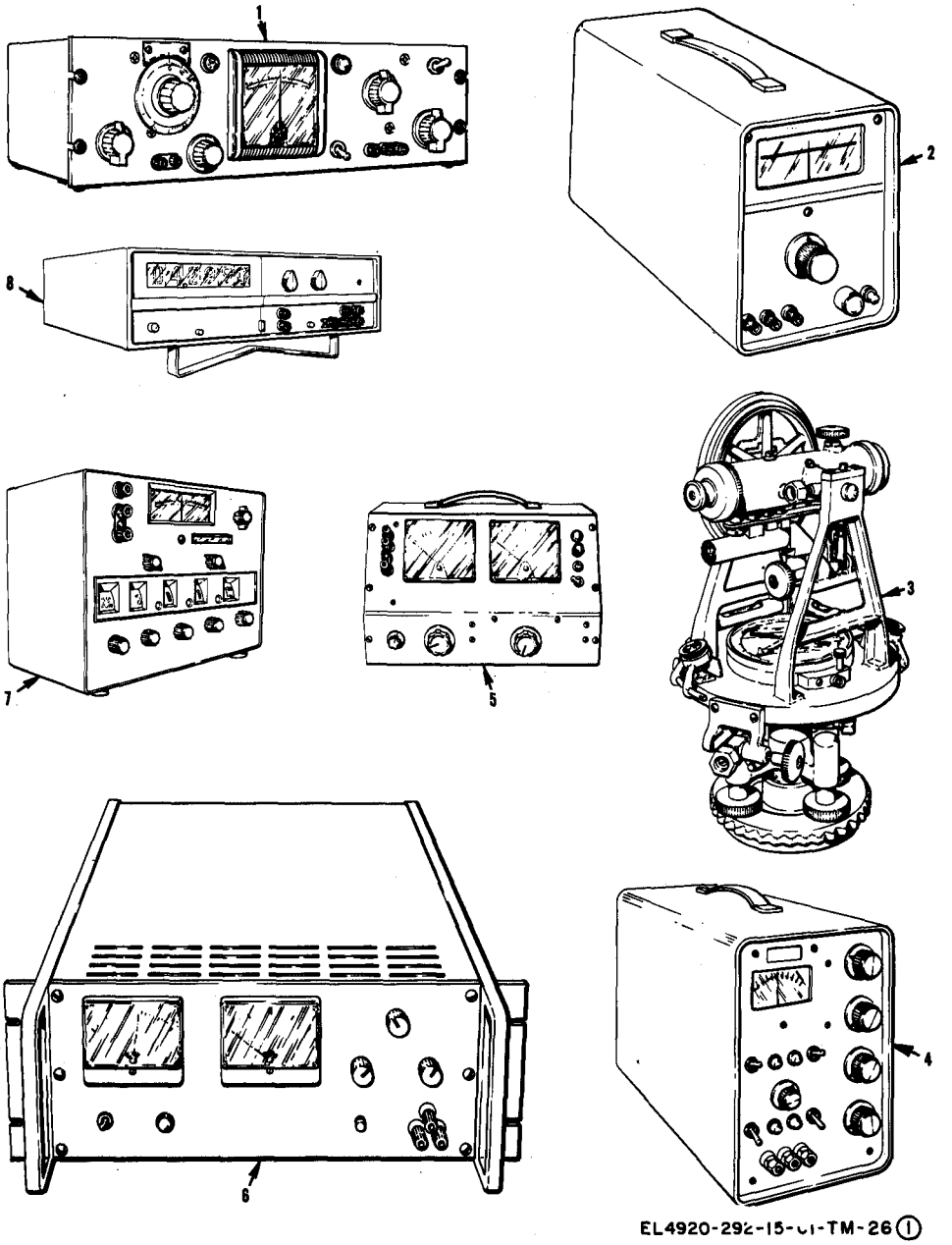

Figure 26①. Special tools, test and support equipment (sheet 1 of 2).

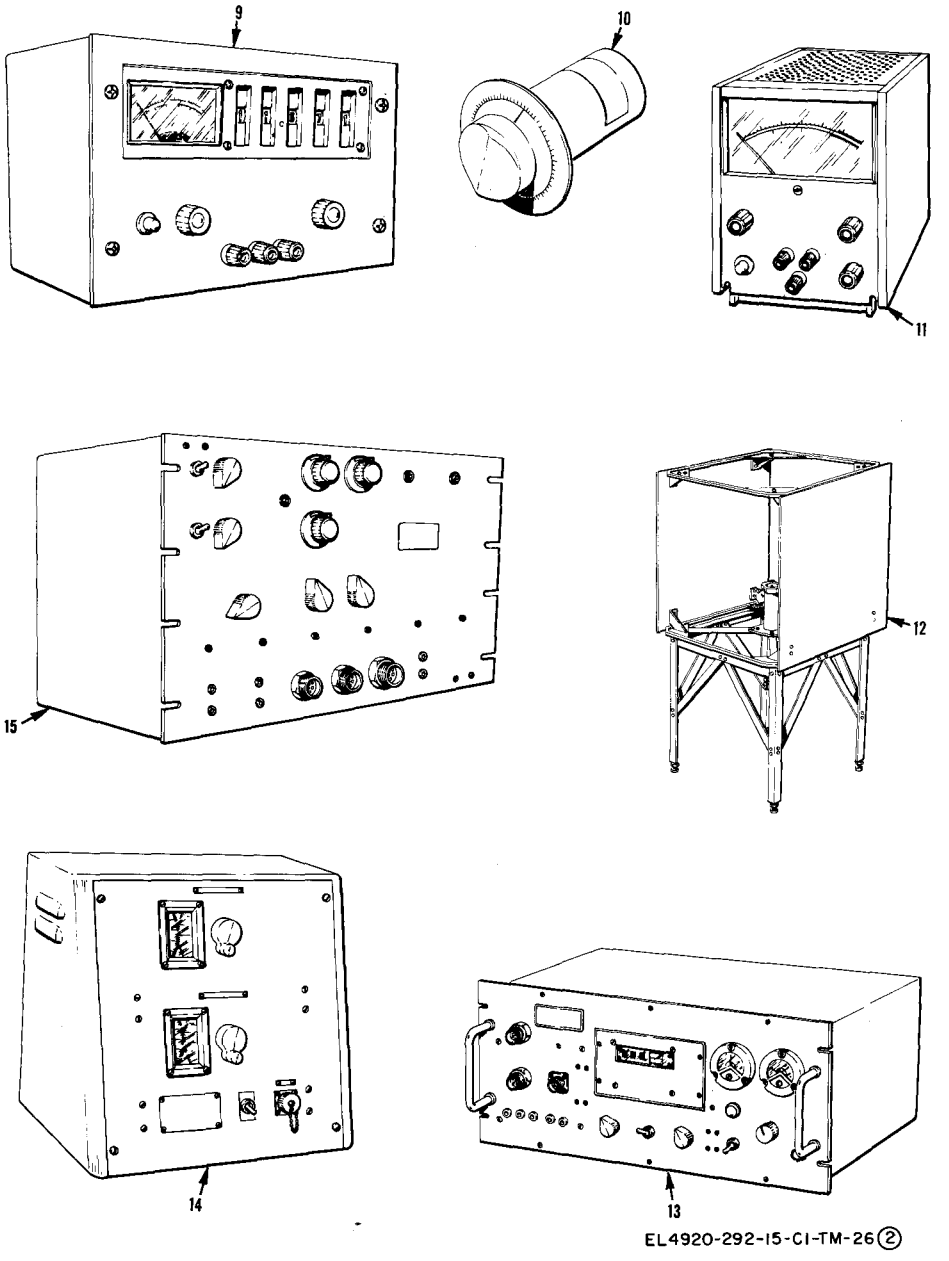

Figure 26②. Special tools, test and support equipment (sheet 2 of 2).