TM 9-2590-213-15

DEPARTMENT OF THE ARMY TECHNICAL MANUAL

Operator, Organizational, Direct Support, General Support, and Depot Maintenance Manual (Including Repair Parts List) For

BULLDOZER, EARTH MOVING: TANK MOUNTING, M8A3 (2590-944-4903)

This copy is a reprint which includes current pages from Changes 1.

HEADQUARTERS, DEPARTMENT OF THE ARMY

AUGUST 1970

WARNING
CARBON MONOXIDE POISONING CAN BE DEADLY

CARBON MONOXIDE IS A COLORLESS, ODORLESS, DEADLY POISONOUS GAS, WHKCH, WHEN BREATHED, DEPRIVES THE BODY OF OXYGEN AND CAUSES SUFFOCATION. EXPOSURE TO AIR CONTAM,INATED WITH CARBON MONOXIDE PRODUCES SYMPTOMS OF HEADACHE, DIZZINESS, LOSS OF MUSCULAR CONTROL, APPARENT DROWSINESS, COMA. PERMANENT BRAIN DAMAGE OR DEATH CAN RESULT FROM SEVERE EXPOSURE.

IT OCCURS IN THE EXHAUST FUMES OF FUEL-BURNING HEATERS AND INTERNAL-COMBUSTION ENGINES AND BECOMES DANGEROUSLY CONCENTRATED UNDER CONDITION OF INADEQUATE VENTILATION. THE FOLLOWING PRECAUTIONS MUST BE OBSERVED TO INSURE THE SAFETY OF PERSONNEL WHENEVER THE PERSONNEL HEATER, MAIN, OR AUXILIARY ENGINE OF ANY VEHICLE IS OPERATED FOR MAINTENANCE PURPOSES OR TACTICAL USE.

1. **DO NOT OPERATE HEATER OR ENGINE OF VEHICLE IN AN ENCLOSED AREA UNLESS IT IS ADEQUATELY VENTILATED.**
2. **DO NOT IDLE ENGINE FOR LONG PERIODS WITHOUT MAINTAINING ADEQUATE VENTILATION IN PERSONNEL COMPARTMENT.**
3. **DO NOT DRIVE ANY VEHICLE WITH INSPECTION PLATES, COVER PLATES, ENGINE COMPARTMENT DOORS REMOVED UNLESS NECESSARY FOR MAINTENANCE PURPOSES.**
4. **BE ALERT AT ALL TIMES DURING VEHICLE OPERATION FOR EXHAUST ODORS AND EXPOSURE SYMPTOMS. IF EITHER ARE PRESENT, IMMEDIATELY VENTILATE PERSONNEL COMPARTMENTS. IF SYMPTOMS PERSIST, REMOVE AFFECTED PERSONNEL FROM VEHICLE AND TREAT AS FOLLOWS: EXPOSE TO FRESH AIR; KEEP WARM; DO NOT PERMIT PHYSICAL EXERCISE; IF NECESSARY, ADMINISTER ARTIFICIAL RESPIRATION.**

THE BEST DEFENSE AGAINST CARBON MONOXIDE POISONING IS ADEQUATE VENTILATION.

Change No. 1

HEADQUARTERS
DEPARTMENT OF THE ARMY
Washington D.C., 12 *February 1974*

Operator, Organizational, Direct Support,
General Support, and Depot Maintenance Manual
(Including Repair Parts List)
For
BULLDOZER,
EARTH MOVING:
TANK MOUNTING, M8A3
(2590-944-4903)

TM 9-2590-213-15, 27 August 1970, is changed as follows.

1. Remove old page and insert new page as indicated below. New or changed material Is indicated by a vertical bar in the margin of the page.

Remove pages	*Insert pages*
AC-1 through AC-3	AC-1 through AC-3

2. File this change in the front of the manual for reference purposes.

By Order of the Secretary of the Army:

CREIGHTON W. ABRAMS
General, United States Army
Chief of Staff

Official:

VERNE L. BOWERS
Major General. United States Army
The Adjutant General

Distribution:

To be distributed in accordance with DA Form 12-37 (qty rqr block No. 300) Operator's Maintenance Requirements for Bulldozer, Tank Mounting, M8A3.

Technical Manual

No. 9-2590-213-15

HEADQUARTERS,
DEPARTMENT OF THE ARMY
Washington, D.C., 20025, 27 *August 1970*

OPERATOR, ORGANIZATIONAL, DIRECT SUPPORT, GENERAL SUPPORT, AND DEPOT MAINTENANCE MANUAL (INCLUDING REPAIR PARTS LIST) FOR BULLDOZER, EARTH MOVING: TANK MOUNTING M8A3 2590-944-4903

			Paragraph	Page
CHAPTER	**1.**	**INTRODUCTION**		
Section	I.	General	1-1	1-1
Section	II.	Description and Data	1-15	1-2
CHAPTER	**2.**	**OPERATING INSTRUCTIONS**		
Section	I.	Service Upon Receipt of Materiel	2-1	2-1
Section	II.	Controls	2-9	2-3
Section	III.	Operation	2-14	2-5
CHAPTER	**3.**	**ORGANIZATIONAL MAINTENANCE**		
Section	I.	Parts, Special Tools, and Equipment	3-1	3-1
Section	II.	Lubrication Instructions	3-9	3-1
Section	III.	Preventive Maintenance Check and Services	3-17	3-1
Section	IV.	Troubleshooting	3-32	3-4
Section	V.	Headlight Assemblies	3-53	3-29
Section	VI.	Hydraulic Cylinders Piping and Guards	3-65	3-31
Section	VII.	Front Mounting Brackets and Moldboard	3-91	3-53
Section	VIII.	Control Assembly *	3-106	3-62
Section	IX.	Electromagnetic Clutch' Electrical System	3-114	3-67
CHAPTER	**4.**	**DIRECT SUPPORT, GENERAL SUPPORT, AND DEPOT MAINTENANCE**		
Section	I.	General	4-1	4-1
Section	II.	Description and Data	4-5	4-1
Section	III.	Parts, Special Tool and Equipment	4-7	4-1
Section	IV.	Troubleshooting	4-12	4-2
Section	V.	General Maintenance Instructions	4-19	4-5
Section	VI.	Headlight Adapter Assembly	4-24	4-8
Section	VII.	Moldboard Cylinder and Ram	4-27	4-10
Section	VIII.	Power Take-Off Assembly	4-30	4-13

			Paragraph	Page
CHAPTER	**5.**	**SHIPMENT AND LIMITED STORAGE AND DEMOLITION TO PREVENT ENEMY USE**		
Section	I.	Shipment and Limited Store	5-1	5-1
Section	II.	Demolition d Material to Prevent Enemy Use	5-4	5-3
APPENDIX	A.	REFERENCES.....	A-1	AA-1
APPENDIX	B.	MAINTENANCE ALLOCATION CHART.....	B-1	AB-1
APPENDIX	C.	BASIC ISSUE ITEMS LIST	C-1	AC-1
APPENDIX	D.	REPAIR PARTS LIST AND SPECIAL TOOLS	D-1	AD-1
APPENDIX	E.	OPERATION AND MAINTENANCE OF PECULIAR COMPONENTS INCLUDING REPAIR PARTS LIST FOR EARLY MODEL BULLDOZER.....	E-1	AE-1

CHAPTER 1
INTRODUCTION

Section I. General

1-1. Scope

1-2. This technical manual contains instruction for operation, organizational, direct, general and depot maintenance including repair parts list for the Tank Mounting, Earth Moving Bulldozer] M8A3 u installed on an M48A3 Tank. The M8A3 bulldozer was developed in two stage of production, and therefore component difference of items occur. The early model M8A3 bulldozer are in the serial number range of 1 through 59. All bulldozers built after this are current model M8A3 bulldozers Hereafter, the bulldozers are referred to as early M8A3 bulldozers or current M8A3 bulldozers. Many maintenance procedures are common to both early and current M8A3 bulldozers although slight differences in configuration exist. Unless otherwise specified the information, data and procedures contained in this manual are applicable to both the early M8A3 and the current M8A3 bulldozers.

1-3. Appendix A contains a list of current references including supply manual, technical manuals, forms and other available publications applicable to this material.

1-4. Appendix B contains the maintenance allocation chart.

1-5. Appendix C lists the Basic Issue Items that are required for stockage for crew maintenance, and includes accessories, attachments, components assemblies and sub assemblies with quantities thereof, which constitute the major end item of equipment. The list includes the crew maintenance accessories, tool, supplies and repair part assemblies accompanying the equipment; all of which constitute the major end item for issue to users.

1-6. Appendix D contains a listing of repair parts for current model M8A3 bulldozer and common repair parts for early M8A3 bulldozer Required for stockage by organizational, direct, general and depot maintenance.

1-7. Appendix E contains instructions for operation and maintenance of peculiar components including peculiar repair parts list for the early model M8A3 bulldozers. The early model M8A3 bulldozers are in the serial number range of 1 through 59.

1-8. Any errors or omissions will be entered on DA Form 2028 and forwarded directly to the Commanding General, U. S. Army Tank Automotive Command, Warren, Michigan, 18090, Attn: AMSTA-MCP.

1-9. Maintenance Allocation

1-10. The prescribed maintenance responsibilities will apply as reflected in the maintenance allocation chart (Appendix B). In all cases, where the nature of the repair, modification, or adjustment is beyond the scope or facilities of organizational maintenance, the supporting unit should be informed in order that trained personnel with suitable tools and equipment may be provided or other instructions issued.

1-11. Forms, Records, and Reports

1-12. General

The forms generally pliable to units maintaining this equipment are listed in Appendix A. No forms other than those approved for the Department of the Army will be used. For a current and complete listing of all forms, refer to DA Pam 310-2. For instructions on use of these forms, refer to TM 38-750.

1-13. Field Report of Accidents Whenever injury to personnel or damage to material occurs, the reports necessary to comply with requirements of the Army safety program are prescribed in AR 385-40, and TM 38-750.

1-14. Equipment Improvement Recommendations.

Equipment faults detected in the equipment or materials should be reported using the equipment improvement recommendations section of DA Form 2407 in accordance with TM 38-750.

Section II. DESCRIPTION AND DATA

1-15. Description

1-16. General

The Tank-Mounting, Earth Moving Bulldozer M8A3 is a hydraulically operated unit for mounting on the M48A3 Tank. (figure 1-1). The bulldozer consists of the following:

(a) A moldboard, with push beams and tilt arms.
(b) Electromagnetic clutch and controls.
(c) Moldboard control handle and linkage.
(d) Carrying hooks and handle.
(e) Hydraulic control system consisting of a mount assembly, an oil reservoir, a control valve manifold, and hydraulic cylinders, tubing and hoses.
(f) Armor guards.

1-17. Moldboard

The moldboard is the earth-moving portion d the bulldozer. The unit is supported by a linkage consisting of two push beams and four tilt arms.

1-18. Electromagnetic Clutch and Control

The electromagnetic clutch is controlled by actuating a switch mounted on the driver's instrument panel. The switch is turned "on" to engage the clutch and turned "off" to disengage the clutch.

1-19. Moldboard Control Linkage

A control handle in the driver's compartment, and a linkage connected to the control valve manifold, controls the operation of the moldboard.

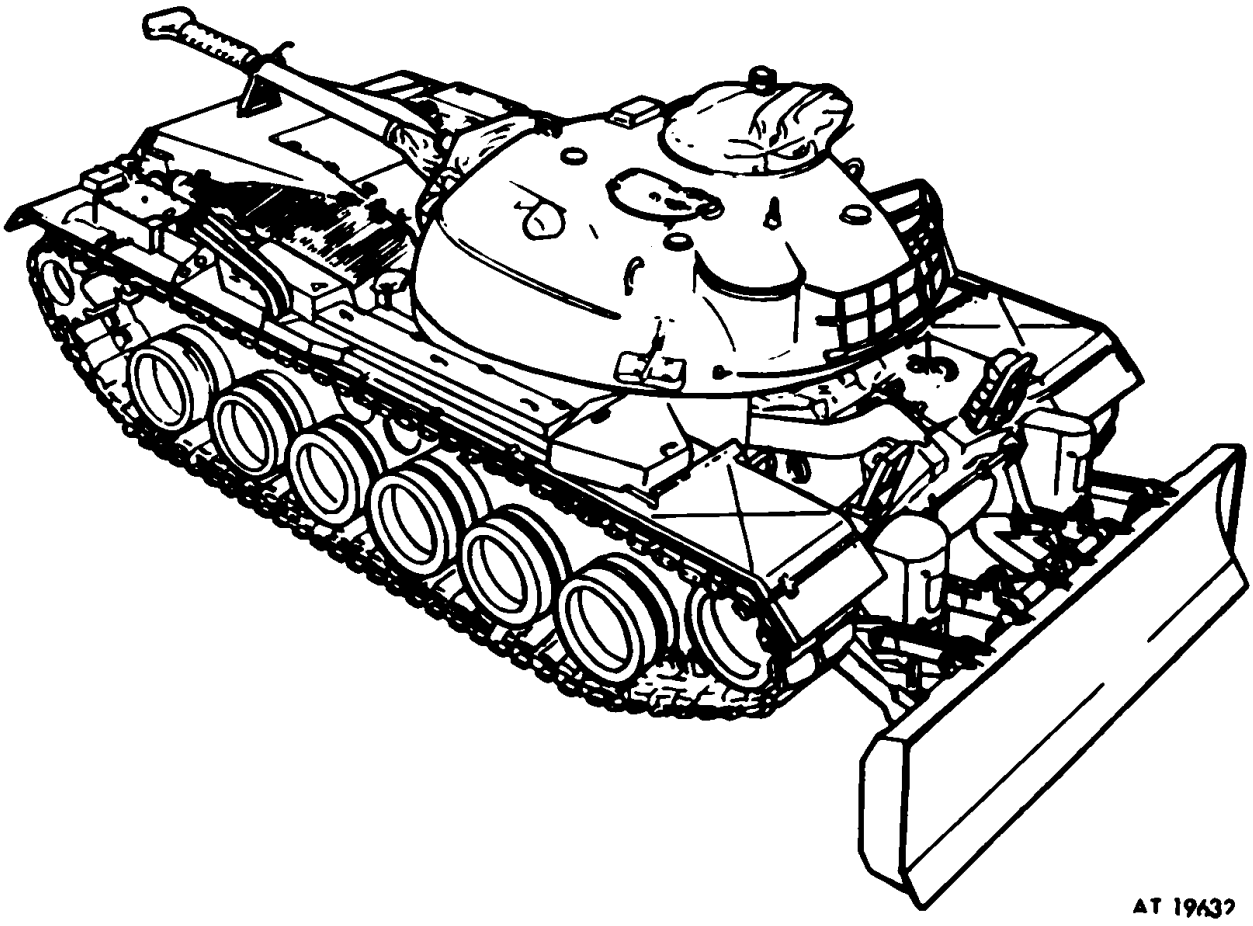

Figure 1-1. Bulldozer, earth moving, tank mounting, M8A3, mounted on tank, combat, full tracked, 90-mr. gun, M48A3.

1-20. Carrying Hooks

Two carrying hooks hold the moldboard in raised position for tank travel. The hoods are manually operated from outside the driver's compartment by pulling on the handle to disengage the hooks and by pushing on the handle to engage the hooks.

1-21. Hydraulic System

The hydraulic system uses oil under pressure to actuate two hydraulic cylinders which raise and lower the moldboard. The mount assembly, which attaches to the power take-off shaft at the rear of the transmission, consists 'of an integral right angle drive, clutch, and pump. The flow of oil to the cylinders is directed by a control valve manifold. The oil reservoir is located at the left rear of the tank. Tubing and hoses connect the hydraulic components.

1-22. Armor Guards

Armor guards protect linkages, tubing, hydraulic cylinders, and other vulnerable portions of the bulldozer.

1-23. Data

The following data provide the operator and organizational maintenance personnel with information for operating and servicing the M8A3 bulldozer:

1-24. General

Angle of moldboard cutting edge (with horizontal):

Float position ..... 59 deg
Lowest position ..... 65 deg

Relation of moldboard cutting edge to ground:
Lowest position ..... 10-in. below
Highest position ..... 30-in. above
Carrying position ..... 29-in. above
Width and Height: Moldboard width..... 146-in.
Moldboard height 36-in
Rate of lift:
Tank main engine at 1,500 rpm..... 5.5-in. per second
Tank main engine at 2,800 rpm..... 10.5-in per second
Forward speed of tank while bulldozing:
Engine at 1,500 rpm and low gear..... 1-3 mph
Recommended maximum speed of tank with bulldozer installed ..... 5 mph
Hydraulic oil data: Reservoir capacity 15gal
Hydraulic system capacity..... I5 gal

1-25. Weights

Reservoir, tubes and guards 298lb
Control valve, manifold, tubes and guards 702lb
Control linkage and guards ..... 41 lb
Mount assembly..... 105 lb
Right headlamp extension and guard ..... 18 lb
Left headlamp extension and guard ..... 18 lb
Moldboard..... 3,004 lb
Pushbeams..... 1,347 lb
Tilt arms ..... 256 lb
Mounting brackets..... 1,816 lb
Cylinders, piping, and guards..... 795 lb
Total weight less oil..... 8,400 lb

CHAPTER 2
OPERATING INSTRUCTIONS

Section I. SERVICE UPON RECEIPT OF MATERIEL

2-1. General

2-2. When new, used or reconditioned material is first received by the using organization, it is the responsibility of the officer in charge to determine whether the equipment has been properly prepared for service by the supplying organization and to insure it is in condition to perform its intended function.

2-3. Services to be performed by the operator or user upon receipt of material are designated in paragraph 2-5. Whenever practicable, the operator or crew will assist organizational personnel in the performance of their service.

2-4. Receiving Inspection

Upon arrival of a new or reconditioned bulldozer. the using organizational maintenance mechanics will inspect all assemblies, subassemblies, and accessories to ensure that they are properly assembled, secured, clean, correctly adjusted, and lubricated. Cheek all tool and equipment (Appendix CI to ensure that all items are present. in good condition, and properly mounted or stowed.

2-5. Service Instructions

2-6. Prior to operating the bulldozer, the driver must become familiar with the control (fig. 2-1) and operating procedures Section II of this chapter.

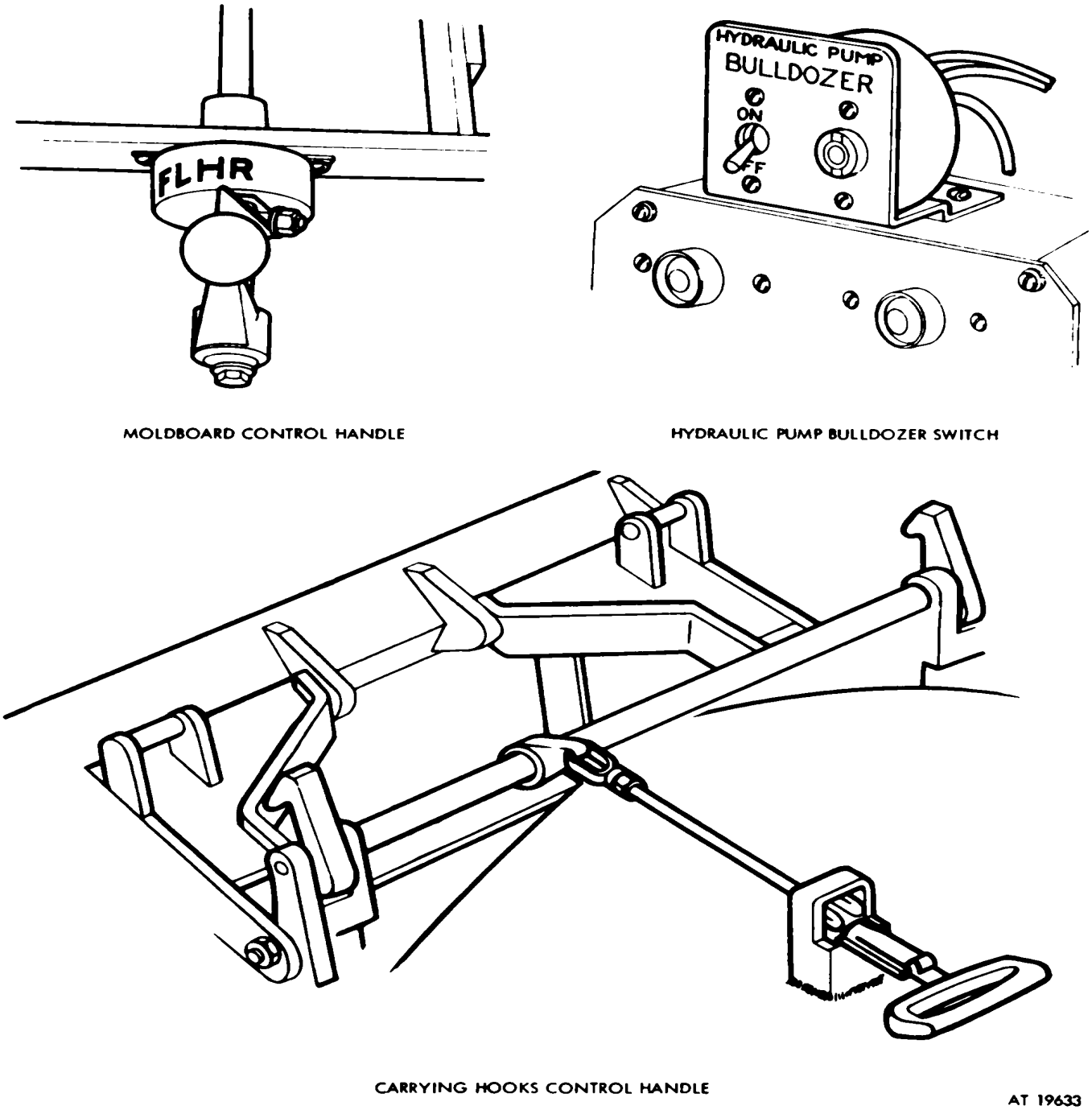

Figure 2-1. Bulldozer controls.

2-7. When assigned a bulldozer for the first time, the operator should start vehicle engine in accordance with TM 9-2350-22410. Engage bulldozer clutch (fig. 2-2) and release moldboard carrying hooks (fig. 2-2). With engine at idle speed, raise and lower moldboard several times. Lower moldboard to ground and check oil level in the oil reservoir (fig. 2-2). If level is low, fill with OE 10 lubricant to "FULL" level mark on dipstick. Inspect all hydraulic cylinders, hoses, tubes, and fittings for leaks, and check all mechanical linkage and connections (fig. 2-3). Disengage and engage the carrying hooks several times to become familiar with the operation of the controls before attempting to move any earth or obstacles.

2-8. During initial operation, the bulldozer must be checked thoroughly for operation of controls, unusual noise, or vibrations. Adjustments and corrections within the scope of the operator should be accomplished. All other deficiencies should be reported to the responsible commander.

Section II. CONTROLS

2-9. General

2-10. Description

This section describes, locates, illustrates, and furnishes the operator with sufficient information pertaining to the control provided for the operation of the M8A3 bulldozer when mounted on the M48A3 tank.

2-11. Electromagnetic Clutch and Control

The hydraulic pump electromagnetic clutch is controlled by actuating a switch mounted on the driver's instrument panel. The switch is turned "on" to engage the clutch and turned "off" to disengage the clutch.

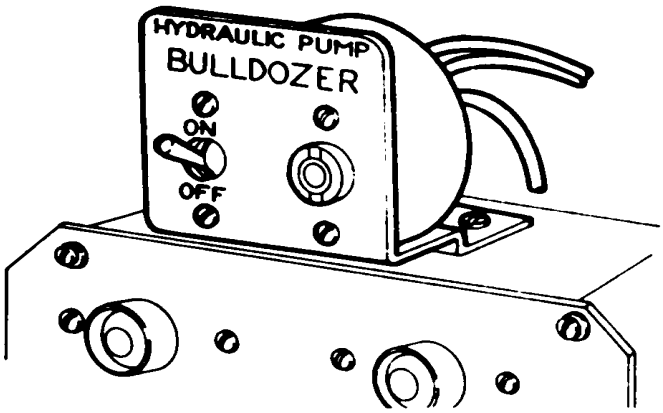

1 WITH TANK ENGINE IDLING, TURN HYDRAULIC PUMP BULLDOZER SWITCH TO "ON" POSITION.

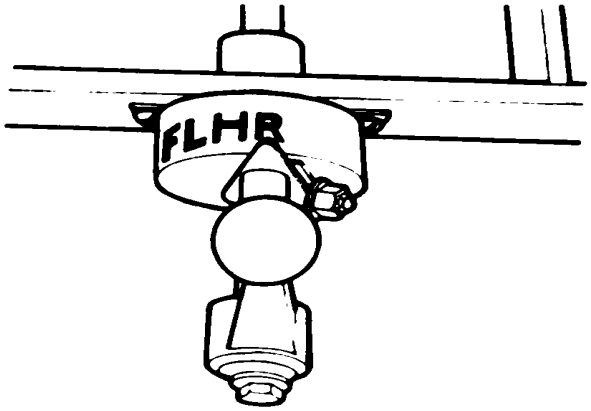

2 MOVE CONTROL HANDLE TO RAISE "R" POSITION.

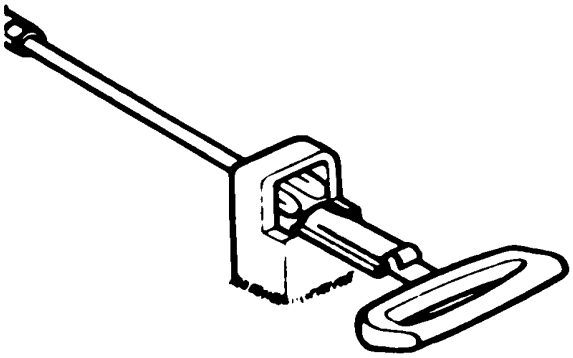

3 PULL CARRYING HOOK HANDLE TO DISENGAGE HOOKS.

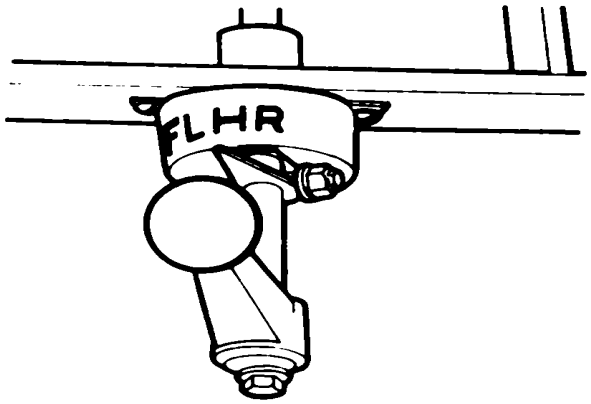

4 MOVE CONTROL HANDLE TO LOWER "L" POSITION AND LOWER MOLDBOARD TO FULL LIMIT OF TRAVEL.

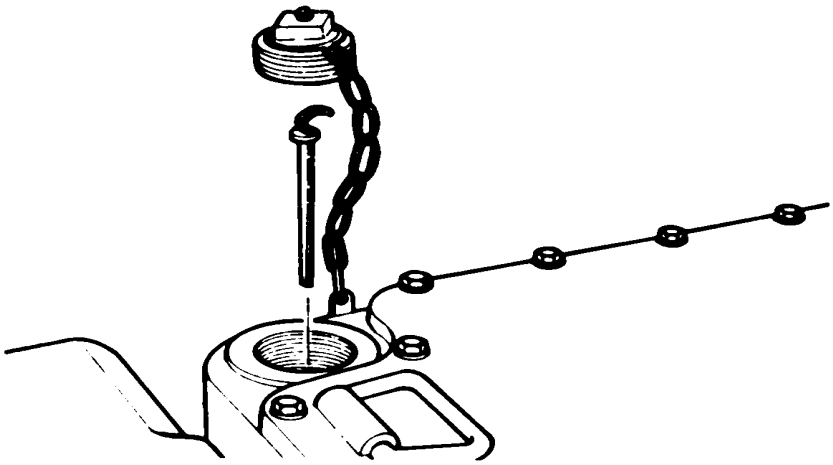

5 RAISE AND LOWER MOLDBOARD SEVERAL TIMES BEFORE CHECKING THE OIL LEVEL IN RESERVOIR. REPLENISH AS NECESSARY.

AT 19634

Figure 2-2. Preliminary operating procedures.

2-12. Moldboard Control

The directional control valve handle (fig. 2-3) that controls the moldboard operation is located in the driver's compartment. The control handle will automatically return to the hold "H" position from the raise "R" or lower "L" position. Additional effort is required in order to engage the float "F" position. When engaged in the float "F" or hold "H" position, the control handle will maintain position until physically moved.

2-13. Carrying Hooks Control

The carrying hooks are engaged or disengaged by a manual control handle mounted to the hull in front d the driver's hatch. Pulling the control handle release the carrying hooks when the moldboard is raised.

Section III. OPERATION

2-14. General

This section contains operating instructions for the Tank-Mounting Earth-Moving Bulldozer M8A3.

2-15. Bulldozer Operation

2-16. Start the vehicle engine and actuate the hydraulic oil pump electromagnetic clutch switch (par. 2-9). Move the operating handle to the "R" (raise) position (fig. 2-2) to fully elevate the moldboard. Keeping the moldboard at the highest position, pull the carrying hooks control handle to the disengaged position (fig. 2-2).

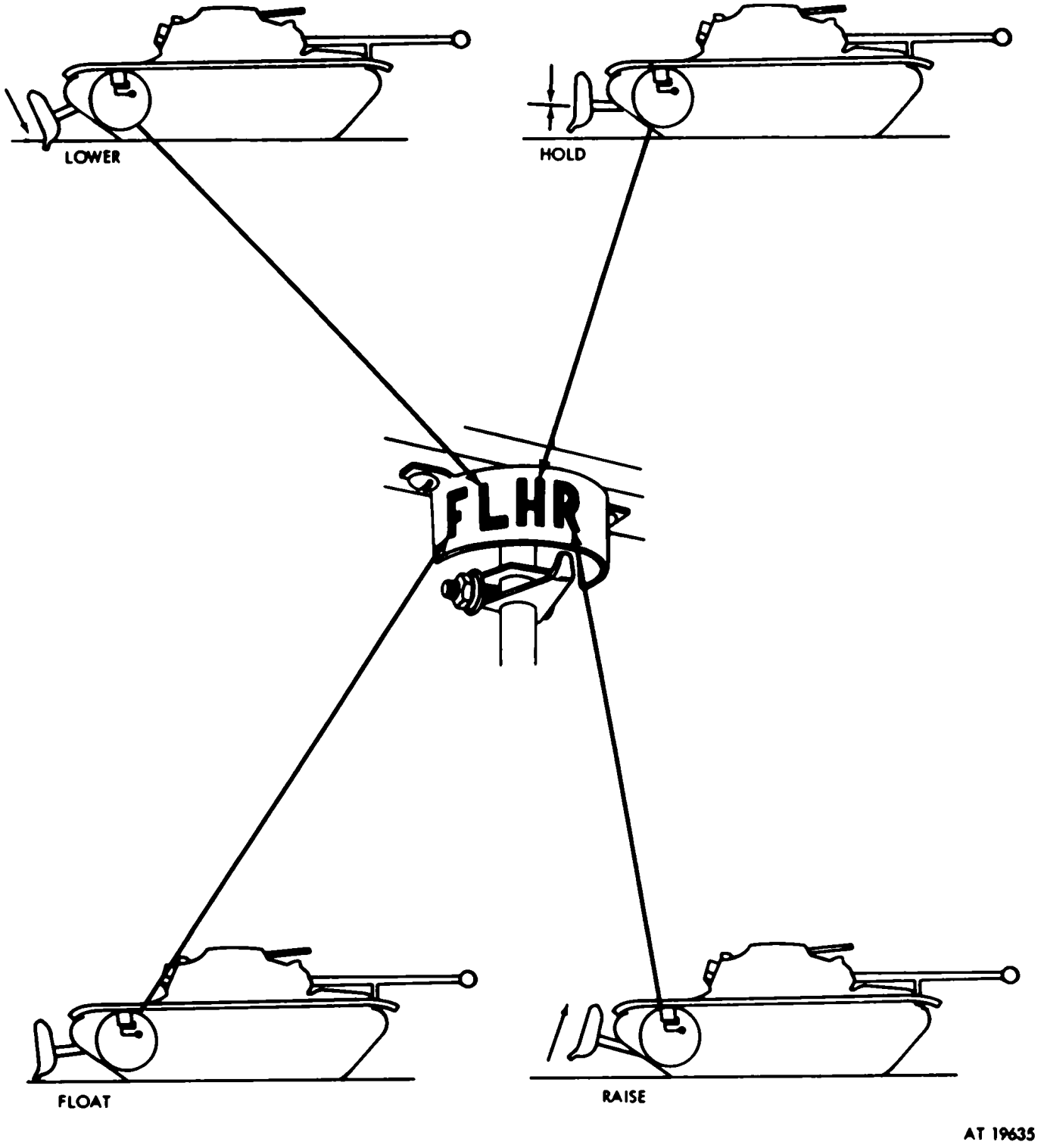

Figure 2-3. Operation of moldboard control handle

2-17. The bulldozer is operated by placing the moldboard control handle into the raise "R", hold "H", lower "L", or float "F" position. In the float position (fig. 2-4), the moldboard rides on the ground with only its weight for downward pressure. This position is extremely useful in moving loose material on hard surfaces or in helping to level the ground in the working area. When the control handle is in lower position, the moldboard will continue to be lowered until it rets on the ground or reaches the lowest point of its travel. The hold position (fig. 2-5) hydraulically retains the moldboard in a fixed position of raise or lower as selected by the operator.

2-18. Up-and-down motion d the vehicle must be compensated for by lowering or raising the moldboard. When the front of the vehicle starts to "nose up," lower the moldboard far enough to compensate for the vehicle motion. If the vehicle engine becomes overloaded when cutting through very hard material, raise the moldboard until the load on the engine is reduced. When the moldboard is lowered and digging, lift it slightly before turning the vehicle.

Note. **The vehicle turning radius is greatly increased when the bulldozer moldboard is in digging position.**

2-19. Emergency lifting cables can be utilized to raise the moldboard when the hydraulic system is inoperative. In this procedure, the cables are attached to the moldboard and track end connectors. The moldboard is lifted by reversing travel of the tank. Detailed operating procedures are shown in figures 2-6 and 2-7. Operation of the M48A3 tank is described in TM 9-2350-224-10, Operator's Manual.

2-20. The bulldozer is taken out of operation by raising the moldboard, engaging the carrying hooks, and turning "off" the hydraulic oil pump electromagnetic clutch switch (fig. 2-8).

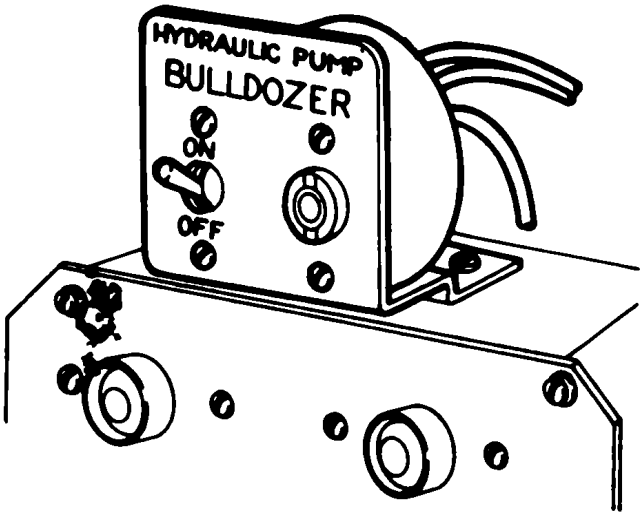

1 WITH ENGINE RUNNING, TURN HYDRAULIC PUMP BULLDOZER SWITCH TO "ON" POSITION.

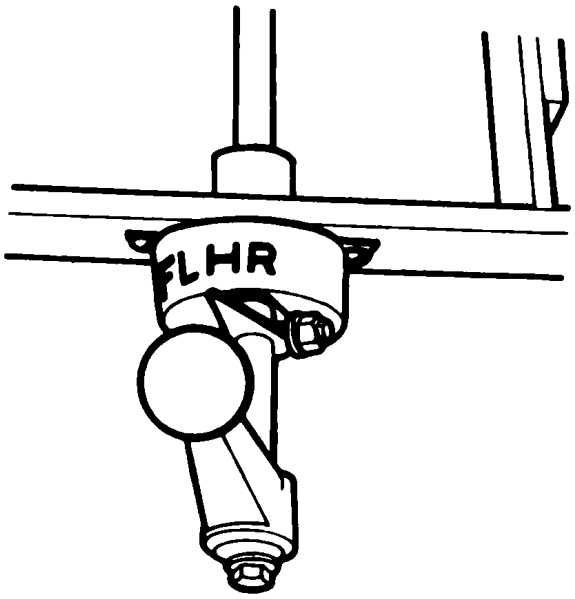

2 HOLD MOLDBOARD CONTROL HANDLE IN "L" POSITION.

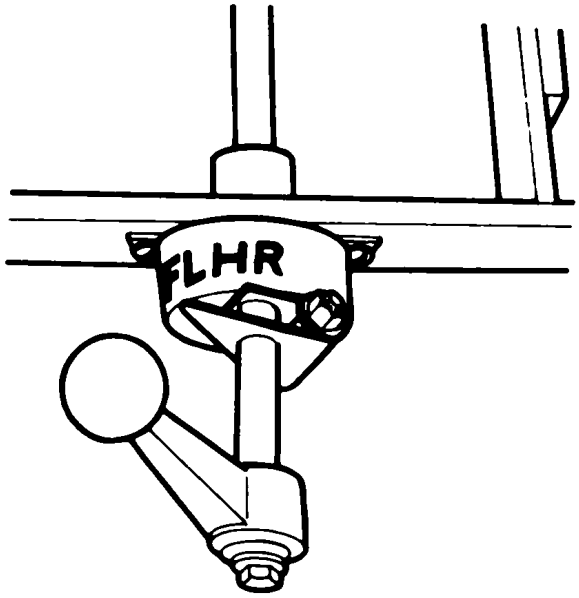

3 WHEN MOLDBOARD TOUCHES GROUND, MOVE CONTROL HANDLE TO "F" POSITION.

NOTE: WHEN THE MOLDBOARD CONTROL HANDLE IS IN THE FLOAT "F" POSITION, OIL PRESSURE HAS BEEN DIVERTED FROM THE CYLINDERS. THE RESULT IS THAT THE MOLDBOARD CAN RIDE ON THE GROUND WITH ONLY ITS WEIGHT AS DOWNWARD PRESSURE.

AT 19636

Figure 2-4. Operating bulldozer in float position.

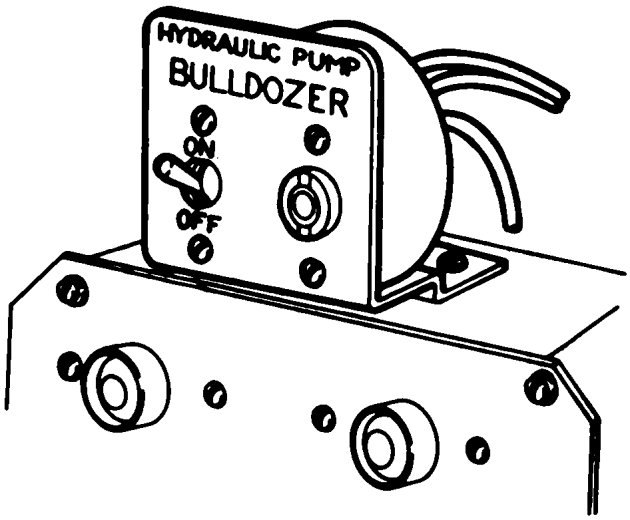

1 WITH TANK ENGINE IDLING, TURN HYDRAULIC PUMP BULLDOZER SWITCH TO 'ON' POSITION.

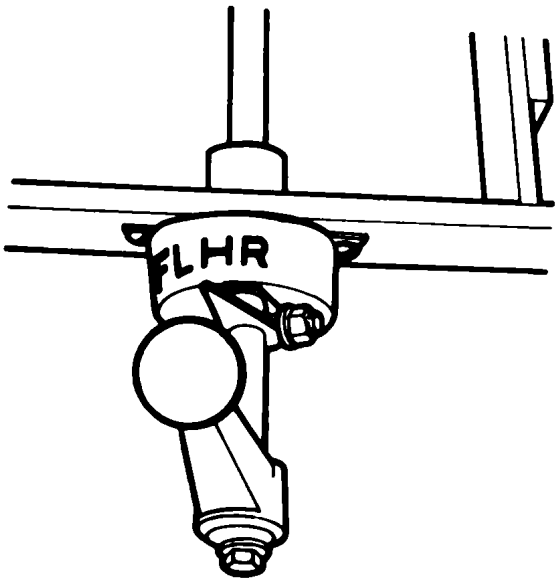

2 WITH TANK MOVING IN LOW GEAR, MOVE THE MOLDBOARD CONTROL HANDLE TO "L' POSITION.

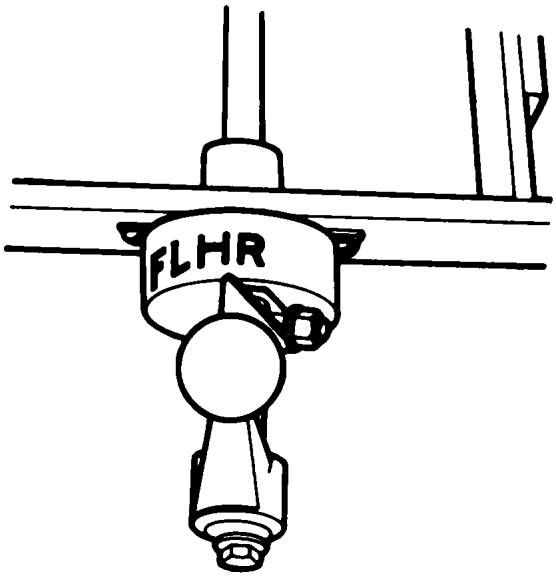

3 WHEN THE MOLDBOARD REACHES THE DESIRED POSITION, RELEASE THE CONTROL HANDLE, IT WILL AUTOMATICALLY RETURN TO HOLD '"H POSITION.

<u>NOTE</u>: KEEP THE TANK AT A STEADY SPEED WHEN BULLDOZING, RAISING, OR LOWERING THE MOLDBOARD, AS REQUIRED TO COMPENSATE FOR UNEVENI GROUND. ALWAYS OPERATE TANK IN LOW GEAR.

CAUTION: <u>DO NOT USE BULLDOZER AS A RAM, THE MOLDBOARD MUST BE USED IN A PUSHING TECHNIQUE RATHER THAN A RAMMING ACTION. WHEN THE MOLDBOARD BECOMES LOADED AND IT IS DESIRED TO TURN THE TANK, LIFT MOLDBOARD SLIGHTLY. DO NOT LOWER THE MOLDIOARD TO THE EXTENT THAT IT WILL STALL THE TANK ENGINE. TAKE ONLY SUCH A CUT AS CAN BE MOVED WITHOUT SLOWING DOWN THE ENGINE. WHEN BULLDOZING MOIST EARTH OR STICKY MATERIAL, KEEP MOLDBOARD CLEAN BY KEEPING IT AT BULLDOZING LEVEL DURING THE LAST FEW FEET OF FORWARD TRAVEL, THEN SHIFT INTO REVERSE AND BACK UP SEVERAL FEET REFORE RAISING MOLDBOARD.</u>

AT 19637

Figure 2-5. Operating bulldozer in hold position.

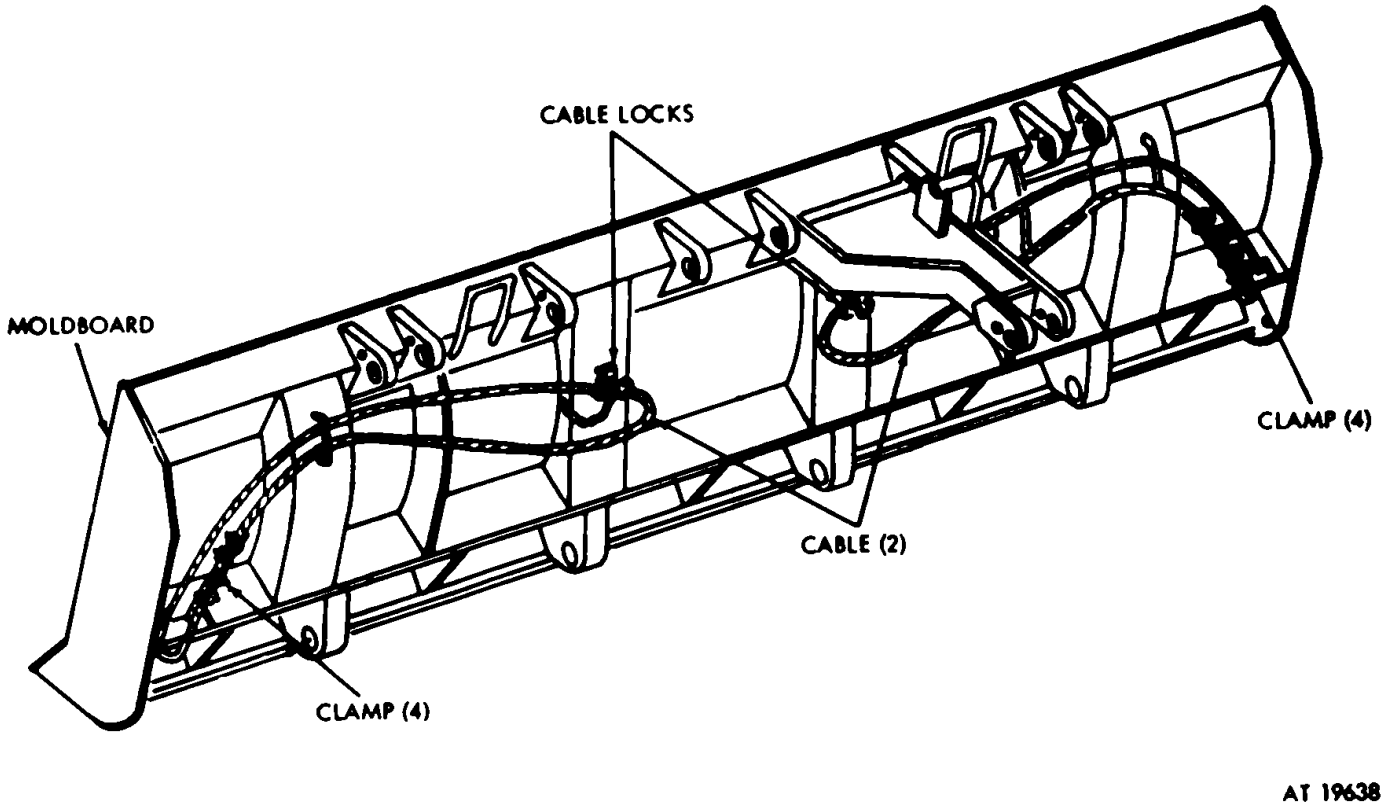

Figure 2-6. Emergency lifting cables - stowed on moldboard.

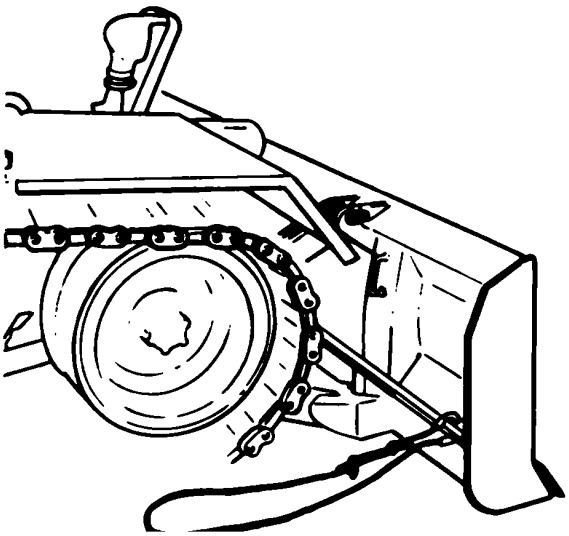

1 OPEN CABLE LOCKS AND DETACH FREE LOOP OF CABLE ASSEMBLY (FIG. 2-6).

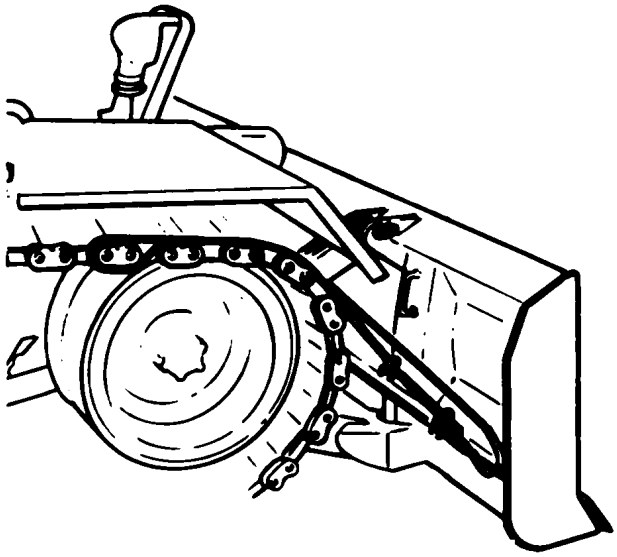

2 SECURE THE FREE LOOP OF EACH CABLE AROUND A TRACK END CONNECTOR LOCATED AT A POINT ON TOP OF THE COMPENSATING IDLER WHEEL.

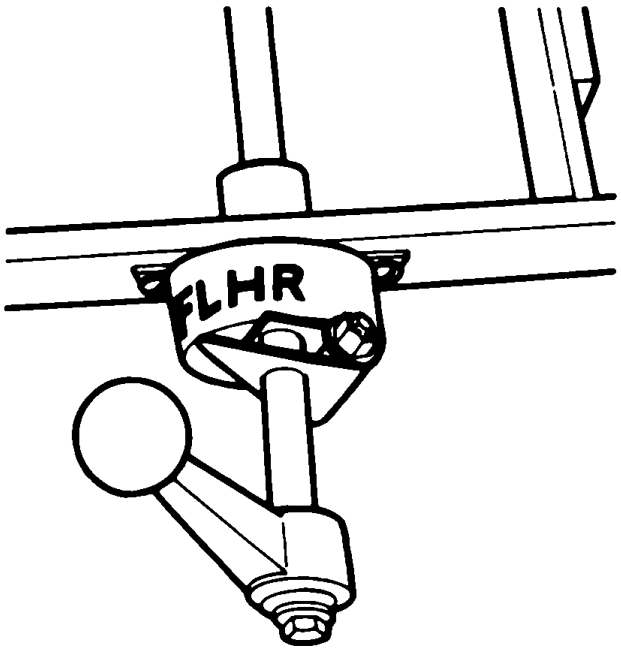

3 PLACE MOLDBOARD CONTROL HANDLE IN 'F" POSITION AND DRIVE TANK SLOWLY IN REVERSE UNTIL MOLDBOARD IS FULLY ELEVATED.

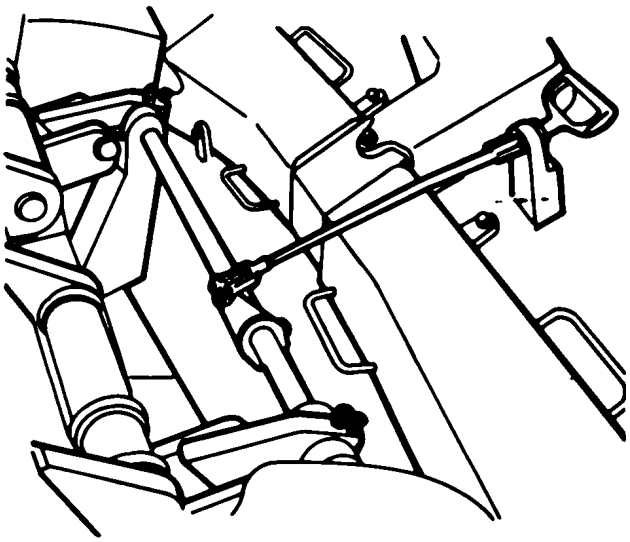

4 ENGAGE CARRYING HOOKS. DRIVE TANK FORWARD SLIGHTLY, REMOVE CABLES FROM TRACK END CONNECTORS, AND PLACE CABLES IN STOWED POSITION.

AT 19639

Figure 2-7. Emergency lifting procedure

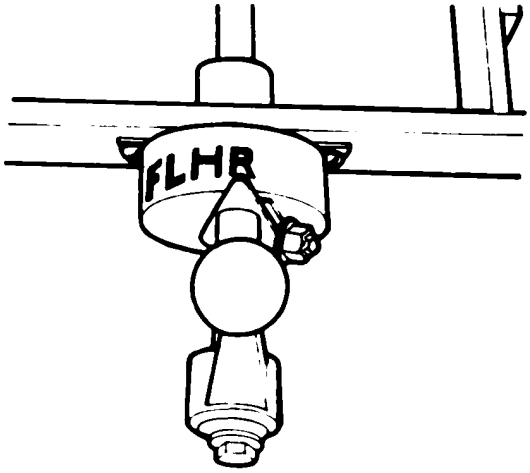

1 MOVE MOLDBOARD CONTROL HANDLE TO "R" POSITION.

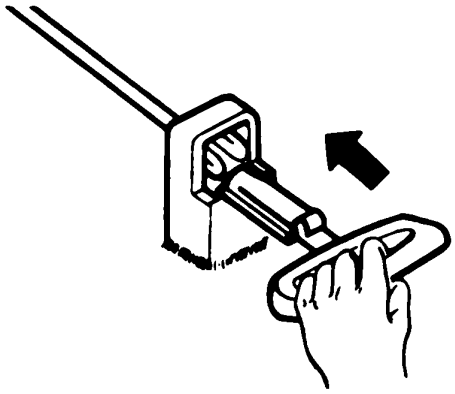

2 PUSH HANDLE TO ENGAGE CARRYING HOOKS.

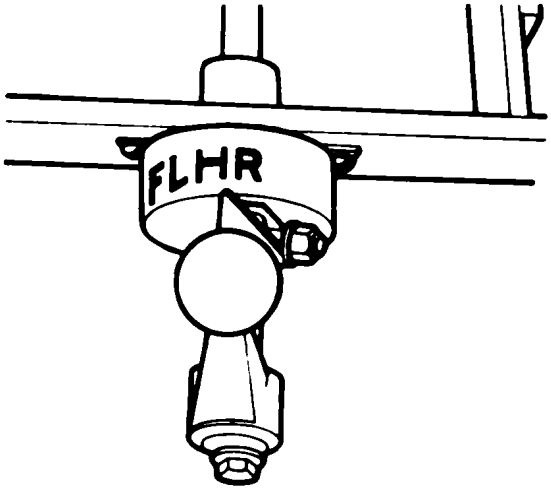

3 WHEN THE CARRYING HOOKS ARE ENGAGED, CONTROL HANDLE WILL AUTOMATICALLY RETURN TO "H" POSITION.

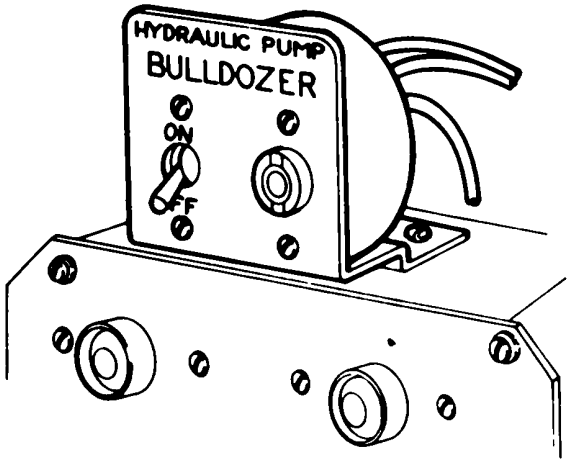

4 TURN HYDRAULIC PUMP BULLDOZER SWITCH TO "OFF" POSITION.

AT 19640

Figure 2-8. Removing bulldozer from operation

CHAPTER 3
ORGANIZATIONAL MAINTENANCE

Section I. PARTS, SPECIAL TOOLS, AND EQUIPMENT

3-1. General.

3-2. Tools, equipment, and repair parts are issued to organizational maintenance personnel for maintaining the material Tools and equipment should not be used for purposes other than those prescribed. All tools and equipment not in use should be properly stored.

3-3. Repair Parts.

3-4. Operator and Crew. No repair parts are issued to the operator and crew for the M8A3 bulldozer.

3-5. Organizational. Repair parts for replacement of worn, broken, or otherwise unserviceable parts are issued to organizational maintenance personnel, provided the replacement of these parts is within their allocated responsibility. Repair parts issued and authorized for the various levels of maintenance are covered in Appendix D.

3-6. Tools and Equipment.

3-7. Common. Standard and commonly used tools and equipment having general application to this material are authorized for issue by Tables of Allowances and Tables of Organization and Equipment.

3-8. Special. None.

SECTION II. LUBRICATION INSTRUCTIONS

3-9. General.

3-10. For lubrication instructions pertaining to the vehicle refer to LO 9-2350-22412.

3-11. Lubrication Instructions

3-12. The lubrication order (LO 9-2590-213-12) prescribes cleaning and lubrication procedures, lubricant points, intervals, and proper lubricants to be used for the bulldozer.

3-13. General. Each vehicle is supplied with lubrication equipment adequate for its maintenance. Clean the equipment before and after use. Operate the lubricating guns carefully and in such a manner as to ensure a proper distribution of the lubricant.

3-14. Reports and Records. Unsatisfactory performance of prescribed lubricants, preserving materials, and lubricating equipment should be reported on DA For 2407.

3-15. A record of lubrication will be maintained on DA Form 2408-2.

3-16. Arctic conditions. For instructions when lubricating under arctic conditions refer to the lubrication order (LO 9-2590-213-12) and TM 9-207.

Section III. PREVENTIVE MAINTENANCE CHECKS AND SERVICES

3-17. General.

3-18. Preventive maintenance is the systematic care, inspection, and service of equipment to maintain it in serviceable condition and to detect faults and failures before extensive and time consuming repairs or replacements are required, The Army system of maintenance prescribes two types of preventive-maintenance services which are described in paragraph 3-19. Refer to TM 38-750 for complete information pertaining to forms and reporting procedure for preventive-maintenance services.

3-19. Responsibilities and Intervals.

3-20. Operator and Crew. The operator d crew are personally responsible for assigned vehicles. Squad, section, and platoon leaders a charged with a supervisory responsibility for vehicles pertaining to their command. The daily preventive-maintenance service (table 3-1) will be performed by the operator and crew each day the bulldozer is operated. This service is divided into three parts.

Table 3-1. Daily Preventive Maintenance Services (Operator and Crew)

Before Operation	Intervals During Operation	After Operation	Procedure
			GENERAL SERVICE OPERATIONS
			*Caution: Place *U tap describing condition of the vehicle in the compartment in a conspicuous location so that thy will not be overlooked*
X		X	Oil Check the amount of oil in the reservoir (fig. 2-3) Add oil a necessary.
X		X	Leaks, general Check around the hydraulic cylinder, directional control valve, line, and fitting for any indication of oil leakage
X		X	Vehicle equipment Inspect the equipment for any visible me that would make it unfit for use Inspect the moldboard cutting edge to make certain it is securely mounted and is not nicked or dulled.
X	X		Control With the engine running, operate the bulldozer control to determine whether they are in good operating condition
	X		Operating observations. While the bulldozer is in operation, be alert for any sounds, such as rattle knocks, or squeaks that may indicate signs of trouble Note any usual or unsatisfactory performance Unusual noises or unsatisfactory performance should be investigated at once.
		X	Clean equipment Wipe dirt, oil and grease from all components.

a. Before-operation service. This is a brief service to determine if the bulldozer is ready for operation. It is a check to see if conditions affecting the readiness status have changed since the last after operation service.

b. During-operation service. This service consist of detecting any unsatisfactory performance. While operating the bulldozer the operator or crew should be alert for any unusual noises or any indications of malfunction. All deficiencies detected while operating the bulldozer shall be investigated, and either corrected r reported to a higher level of maintenance.

c. After operation service. The purpose of the after-operation is to prepare the equipment to operate at a moment's notice. This basic daily service is particularly important that the operator or crew inspects the equipment thoroughly to detect any deficiencies that may have developed during operation. Assemblies that require inspection or service shall be inspected as soon as possible after parking the vehicle. Defect and malfunctions that occurred during the day must be corrected. All defects not authorized for repair by driver or crew, must be reported to the squad, section, or platoon leader, or other designated authority.

3-21. Inspection and Procedures.

3-22. Organization. The quarterly "Q" preventive-maintenance service (table 3-2) will be performed by the organizational maintenance personnel, with the assistance of operator or crew, every three months, or 750 miles, whichever occurs first.

Table 3-2. Quarterly "Q" Preventive-Maintenance Services (Organizational)

Intervals Quarterly "Q" (or 750 miles)	Procedure
	INSPECTION AND ROAD TEST
X	Hydraulic system Operate bulldozer. Check for oil leaks at hydraulic cylinders and all hydraulic lines and connections
X	Hydraulic control system. Operate bulldozer. Check for hydraulic leaks at oil pump, oil reservoir, and directional control valve and oil line connections.
X	Carrying hooks Operate the carrying hooks control handle to determine whether hooks will properly engage and disengage the moldboard.
X	MAINTENANCE OPERATIONS Lubrication. Lubricate in accordance with lubrication order (LO 9-2590-213-12).
X	Moldboard carrying hook arms, push beams, and trunnion cap assemblies Examine carefully for cracks or distortion.
X	Pins. Examine pins which attach the moldboard to the push beams, push beams to the mounting brackets, upper arms to the trunnion and cap assemblies, upper arms to the moldboard, and the hydraulic cylinder piston rams to the push beams. Also, examine the stub shafts by which the hydraulic cylinders are retained in the trunnion and cap. assemblies Check for distortion and wear. Tighten nuts and/or bolts which secure the pins Tighten all screws that support the cylinder brackets to the front eyes on the hull.
X	Carrying hooks shafts. Examine shafts for distortion Tighten carrying hooks screws and setscrews.
X	Hydraulic cylinders Examine hydraulic cylinder piston rams for distortion and scoring. Tighten the screws securing the hydraulic cylinder heads to the cylinders and screws securing piston ram packing glands to cylinder heads Check tightness of all screws securing cylinder guards to cylinder brackets.
X	Cables. Examine emergency lift cables for fraying and/or loose connections.
X	Directional control valve and moldboard control handle. Test operation of the bulldozer and note the reaction to positions selected. Check moldboard control handle (fig. 2-1 for distortion and
X	excessive play. Hydraulic pump and mount assembly. Tighten all mounting screws Check clutch equipment.
X	Guards-hydraulic lines reservoir, directional control valve Check all screws, nuts, and bolts for tightness

3-23. The following general procedures apply to both operator and crew organizational preventive-maintenance service, and all inspections. The general procedures are just as important as the specific procedures.

3-24. Inspections will be made to assure if items are in good condition, correctly assembled or stored, secure, not excessively worn, not leaking, and adequately lubricated. Any or all of these checks that are pertinent to any item (including supporting, attaching, or connecting members) will be performed automatically, as general procedures, in addition to any specific procedures given.

a. Inspection for "good condition" is usually visual inspection to determine if the unit is safe or serviceable. Good condition is explained further as meaning: not bent or twisted, not chafed or burned, not broken or cracked, not bare or frayed, not dented or collapsed, not torn or cut, and not deteriorated.

b. Inspection of a unit to see that it is correctly assembled or stored is usually a visual inspection. The inspection determines if the unit is in its normal position in the vehicle and if all its parts are present and in their correct relative positions.

c. Inspection of a unit to see that it is "secure" is usually a visual, hand-feel, prybar, wrench, or screwdriver inspection for looseness in the unit. This inspection will include brackets, lockwashers, locknuts, locking wires, and cotter pins as well as connecting tubes, hoses, or wires.

d. "Excessively worn" is understood to mea worn beyond serviceable limits or likely to fail, not replaced before the next scheduled inspection Excessive wear of mating parts or linkage connections usually is evidenced by too much play flash or lost motion. The term "excessively worn" includes illegibility as applied to markings, data and caution plates, and printed matter.

3-25. Where the instruction "tighten" appears i the procedures, it means tighten with a wrench even if the item appears to be secure.

3-26. Such expressions a "adjust if necessary are not used in the specific procedures. It understood that whenever inspection reveals the need of adjustments, repairs, or replacements, the necessary action will be taken.

3-27. Cleaning.

3-28. Any special cleaning instructions require for specific mechanism or parts are contained in the pertinent section. General cleaning instructions are as follows:

a. Use dry-cleaning solvent or mineral spirit paint thinner to clean or wash grease or oil frog all parts.

b. A solution of one part grease-cleaning compound to four parts of dry-cleaning solvent c mineral spirits paint thinner may be used for dissolving grease and oil from components of the bulldozer. After cleaning, use cold water to rinse off any solution which remains.

c. After the parts are cleaned, rinse and dry them thoroughly. Apply a light grade of oil to a polished metal surfaces to prevent rusting.

d. When authorized to install new parts remove any preservative materials, such as rust-preventive compound, protective grease etc.; prepare parts as required (oil seals, etc.); for those parts requiring lubrication, apply the lubricant prescribed in the lubrication order.

e. Nameplates, caution plates, and instruction plates made of steel rust rapidly. When they are found to be in a rusty condition, they should be thoroughly cleaned and heavily coated with an application of clear lacquer.

3-29. General precautions in cleaning are as follows:

a. Dry-cleaning solvent or mineral spirits paint thinner is flammable and should not be used near an open flame. Fire extinguisher should be provided when this material is used. Use only in well-ventilated places.

b. This cleaner evaporates quickly and has a drying effect on the skin. If used without gloves, it may cause cracks in the skin. In some individuals, a mild irritation or inflammation will result.

c. Avoid spilling petroleum products, such as dry-cleaning solvent, mineral spirits paint thinner, engine fuels, or lubricants on rubber parts as they will deteriorate the rubber.

3-30. Painting.

3-31. Instructions for cleaning and for the preparation of the material for painting are contained in TM 9-208-1. Methods of painting and materials to be used are contained in TM 9213. Instructions for camouflage painting are contained in FM 5-20.

Section IV. TROUBLESHOOTING

3-32. General.

3-33. This section contains troubleshooting in formation and tests for locating and correcting some of the troubles that may develop in the equipment. The information is arranged to provide the mechanic with a flexible and logical step-by-step method of troubleshooting. Once f malfunction is recognized, the mechanic is guidance in solving the maintenance problem by the use o troubleshooting routines or by the combined us of a qualification procedure, troublehooting routines and tables, and various supporting information.

3-34. This manual cannot cover all possible troubles which may occur under the many operating conditions. If a specific trouble, test, and remedy is not covered, proceed to isolate the system in which the trouble occurs and then locate the defective component. Standard automotive theories and principles of operation apply in troubleshooting the equipment. Use all senses and methods to observe and to locate troubles. Do not

neglect the use of any test instruments such as multimeters, voltmeters, ammeters, test lamps, hydrometers, and pressure and vacuum gages which may be available. To obtain the maximum number of observed symptoms of trouble, question the vehicle crew about the conditions under which the symptoms occurred. The greater the number of symptoms of troubles that can be evaluated, and the more detailed the knowledge of the conditions under which they occurred, the easier it will be to isolate the defect.

3-35. The troubleshooting information contained in this section parallels the concept of organizational maintenance and the level of responsibility prescribed in the Maintenance Allocation Chart (Appendix B).

3-36. Instructions on using the multimeter for electrical troubleshooting are presented in paragraph 3-49.

3-37. Troubleshooting Technique.

3-38. When a malfunction is detected perform a troubleshooting routine to determine the probable cause of the malfunction and the proper action to take to correct it. The proper troubleshooting routine may be determined by using one of the three approaches shown in figure 3-1 and described in the following test:

a. Malfunction Approach. The malfunction approach consists of referring to the troubleshooting table (table 3-4) and selecting the probable cause of a particular malfunction. Table 3-4 lists various abnormal operations and indications which may occur during inspection and operation of the vehicle. It provides a list of probable causes of the malfunction, corrective actions to be taken, and/or reference to the appropriate troubleshooting routines for isolating the faulty circuit or component.

b. Test Approach. The test approach may be used to isolate trouble to a particular system or circuit by performing the qualification procedure in table 3-3. The qualification procedure is a progressive check-out procedure, consisting of commands, responses and references to the appropriate troubleshooting routine to be performed when abnormal results are obtained. The qualification procedure can be used independently as a check-off list to certify correct operation or to requalify systems after completion of corrective maintenance.

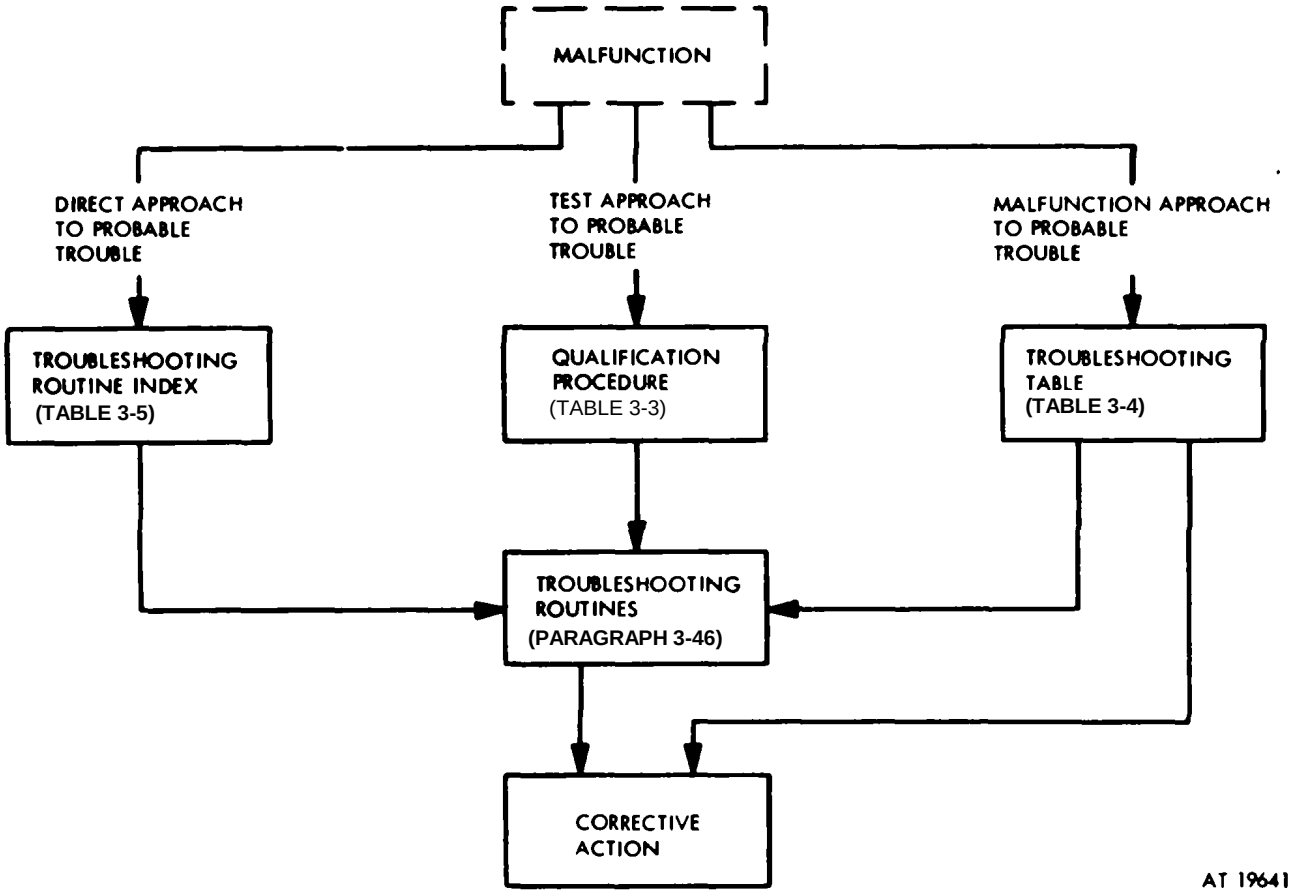

Figure 3-1. Troubleshooting technique.

Table 3-3. Qualification Procedure

Command	***Response***	***Troubleshooting Reference (Figure No.)***
1. Pre-requisites for test (with engine not running). *a.* If moldboard is full-raised position, ensure carrying hooks are engaged. *b.* Ensure vehicle batteries are fully charged (minimum specific gravity of 1.225). *c.* Ensure hydraulic system is complete and there is no evidence of damage. *d.* Ensure vehicle is on level ground and in an area permitting operation of bulldozer.		

Table 3-3. Qualification Procedure - Continued

Command	***Response***	***Troubleshooting Reference (Figure No.)***
e. Check bulldozer operating control handle for proper motion without binding or looseness.		
f. Check oil in right-angle drive and magnetic clutch for proper level.	Oil in right-angle drive and magnetic clutch at proper level (see lubrication order).	LO 9-2590-213-12
g. Ensure bulldozer operating control handle is in HOLD (H) position.		
h. If tank is equipped with generator switch, ensure switch is closed.		
2. Place MASTER SWITCH in the ON position.	MASTER SWITCH indicator is ON.	TM 9-2350-224-20
3. Start engine and allow engine to idle.		
4. Check oil in reservoir for proper level.	Oil in reservoir at proper level (see lubrication order).	LO 9-2590-213-12
5. Place HYDRAULIC PUMP switch in the ON position	HYDRAULIC PUMP indicator is ON. Clutch engages hydraulic pump.	3-2
6. Allow engine to operate at 1500 RPM.		
7. Place bulldozer operating control handle in the RAISE (RI position **(Note: If moldboard is already in raised position and carrying hooks are engaged, disengage carrying hooks.**	Moldboard elevates to full-raise position	3-2
8. Place bulldozer operating handle in the LOWER (L) position.	Moldboard lowers to ground level	3-2
9. Place bulldozer operating handle in the RAISE (R) position and allow moldboard to raise to mid-position between ground level and carrying hook height, then allow bulldozer operating handle to return to HOLD (H) position. Allow moldboard to remain in mid-position for one (1). minute.	Moldboard remains in mid-position for one (1) minute without the moldboard drifting downward more than 1/4 inch.	3-2
10. Place bulldozer operating handle in the LOWER (LI position and allow moldboard to lower to ground level	Moldboard lowers to ground level	3-2
***Note*: Use a stop watch to time the response of the next step.**		
11. Place bulldozer operating handle in the RAISE (RI position and allow moldboard to elevate to the full-raised position.	Moldboard elevates downward to ground level to the full-raised position within 5.0 to 6.0 seconds.	3-2
12 Place bulldozer operating handle in the FLOAT (F) position and allow moldboard to drift downward to ground level.	Moldboard drifts downward to ground level.	3-2

Table 3-3. Qualification Procedure - Continued

Command	***Response***	***Troubleshooting Reference (Figure No.)***
13. Place bulldozer operating handle on RAISE IRI position and raise moldboard to full-raised position.	Moldboard elevates to full-raised position	3-2
14. Position the carrying hook operating handle to the engage positions and engage carrying hooks.	Carrying hooks engaged.	
15. Place HYDRAULIC PUMP switch in the OFF position goes	HYDRAULIC PUMP indicator OFF. Clutch disengages hydraulic pump.	
16. Stop engine and place the MASTER SWITCH in the Off position.	MASTER SWITCH indicator goes OFF.	

Table 3-4. Troubleshooting

Malfunction	Probable cause	Corrective action
1. Moldboard fails to maintain desired HOLD position responds sluggishly to control when being raised or lowered.	*a.* Insufficient oil in the hydraulic and system 213-12.	*a.* Refill reservoir see 1I0 9-2590-
	b. Restricted oil flow caused by clogged reservoir screen	*b.* Remove and clean screen (figs 3-34).
	c. Damaged hydraulic lines and fittings.	*c.* Replace all punctured flexible hose and metal tubing or damaged fittings. Repair or replace metal tubing that is damaged to the point where it is restricting oil flow.
	d. Damaged cylinder seals.	*d.* Replace cylinder seals damaged by abrasives or wear (fig 4-3).
	e. Faulty hydraulic pump.	*e.* Inspect pump and listen for unusual noises Determine that (1) pump bearings, (2) seals, (3) shafts, and (4) wear plates are in good condition This requires removal of pump Replace pump if necessary (par 4-32).
	f. Faulty operation of directional control valve or mechanical linkage.	*f.* Adjust control valve linkage if it is binding or distorted Check valve springs and seals (para. 3-89).
	g. Presence of air in hydraulic line.	*g.* Operate moldboard continuously until air is completely disseminated as evidenced by fully effective moldboard control. **Note: Hydraulic system is self-purging.**
	h. Decrease in oil supply in the hydraulic system, causing overheating of pump.	*h.* Check oil level in hydraulic system and refill reservoir if necessary see LO 9-2590-213-12.

Table 3-4. Troubleshooting - Continued

Malfunction	Probable cause	Corrective action
	i. Restriction of oil flow caused by improper operation of safety unloader assembly	i. Inspect check valve for proper operation Removal is necessary to check cracking pressure of 5000 psi (fig 3-36) Check contamination of tube assembly (fig 3-36) routed from control valve outlet to unloader valve.
2. Right-angle drive over-heating.	a. Lack of lubricating oil in right-angle drive housing.	a. Fill right-angle drive housing see LO 92590-213-12.
	b. Gears worn.	b. Remove and replace worn gears para 4-33l.
	c. Gears broken.	c. Replace broken gears (para 4-33).
	d. Improper backlash.	d. Adjust or replace gears (para 4-33).
	e. Bearings worn.	e. Remove and replace worn bearings (para 4-33).
	f. Seals damaged.	i. Replace damaged seals (par 4-33).
3. Moldboard fails to rise high enough to engage carring hooks.	a. Linkage distorted or obstructed.	a. Inspect linkage at front of vehicle for interference caused by dirt or rocks wedged between members Remove obstructions
	b. Interference with carrying hooks.	b. Check the carrying hooks for looseness of shaft Correct the position of carrying hooks on shaft and tighten hooks set-screws (fig. 3-44).
4. Moldboard fail to dig properly.	a. Moldboard cutting edge loose or worn.	a. Inspect cutting edge for looseness andtighten attaching bolts if required. If cutting edge is excessively worn, reverse or replace (fig. 3-42).
	b. Moldboard or attaching linkage damaged or loose.	b. Check for misalinement of moldboard pushbeams or tilt arms Replace damaged parts (fig. 3-38). Tighten loose components

c. Direct Approach. The direct approach may be used when a malfunction is encountered. Find the appropriate troubleshooting routine index table 3-5. This table contains a listing of trouble indicating elements which are arranged alphabetically and keyed to applicable troubleshooting routines. From table 3-5, select the proper troubleshooting routine for troubleshooting the malfunction encountered. With the aid of the referenced troubleshooting routine, and supporting data (schematic diagrams and locational views), the exact cause of the trouble and the required corrective action may be determined.

3-39. Troubleshooting Table (Malfunction Approach)

3-40. The troubleshooting table (table 3-4) is used in conjunction with the malfunction approach in troubleshooting the bulldozer. The table contains a list of various malfunctions which may occur during operation of inspection of the vehicle. The malfunctions are grouped by systems (control assembly, electromagnetic clutch system, hydraulic cylinder piping and guards, etc.). Each malfunction is followed by a list of probable causes. These causes are listed in the order of probability and should be considered in this order when troubleshooting. Following each probable cause are instructions for performing corrective action. Table 3-4 provides either specific instructions for correcting the fault, or references to a specific troubleshooting routine.

3-41. Table 3-4 does not list malfunctions or probable causes for which corrective action is beyond the scope of organizational maintenance. Notify supporting maintenance personnel of malfunctions not listed.

3-42. Qualification Procedure

3-43. General. The qualification procedure (table 3-3) is used for the test approach method of electrical troubleshooting. It is a progressive checkout procedure. Therefore, each command must be performed in consecutive order beginning with command No. 1. After performing the indicated command, observe all the normal indications listed in the response column. When the normal response is not indicated, refer to the troubleshooting routine figure number referenced under the troubleshooting reference column. After correcting the malfunction, repeat the applicable portion of the qualification procedure to assure that normal responses are obtained.

3-44. Prerequisites for Test. Prior to testing the vehicle, check that:

a. Vehicle is intact with all ground leads secure and connectors tight; there is a full complement of lamps, and no physical evidence of damage to electrical components.

b. Specific gravity of vehicle batteries is not less than 1.225 (temperature corrected).

3-45. Schematic diagrams and locational views (figures 3-2 through 3-13) are provided as supporting aide to the troubleshooting routines. The schematic diagrams and the locational views are keyed together by a harness-to-view index (table 3-6). Figure 3-11 illustrate the various symbols used in the electrical schematics.

3-46. When using the troubleshooting routines, observe the following guide lines:

SEE WIRING SCHEMATIC FIGURE 3-12

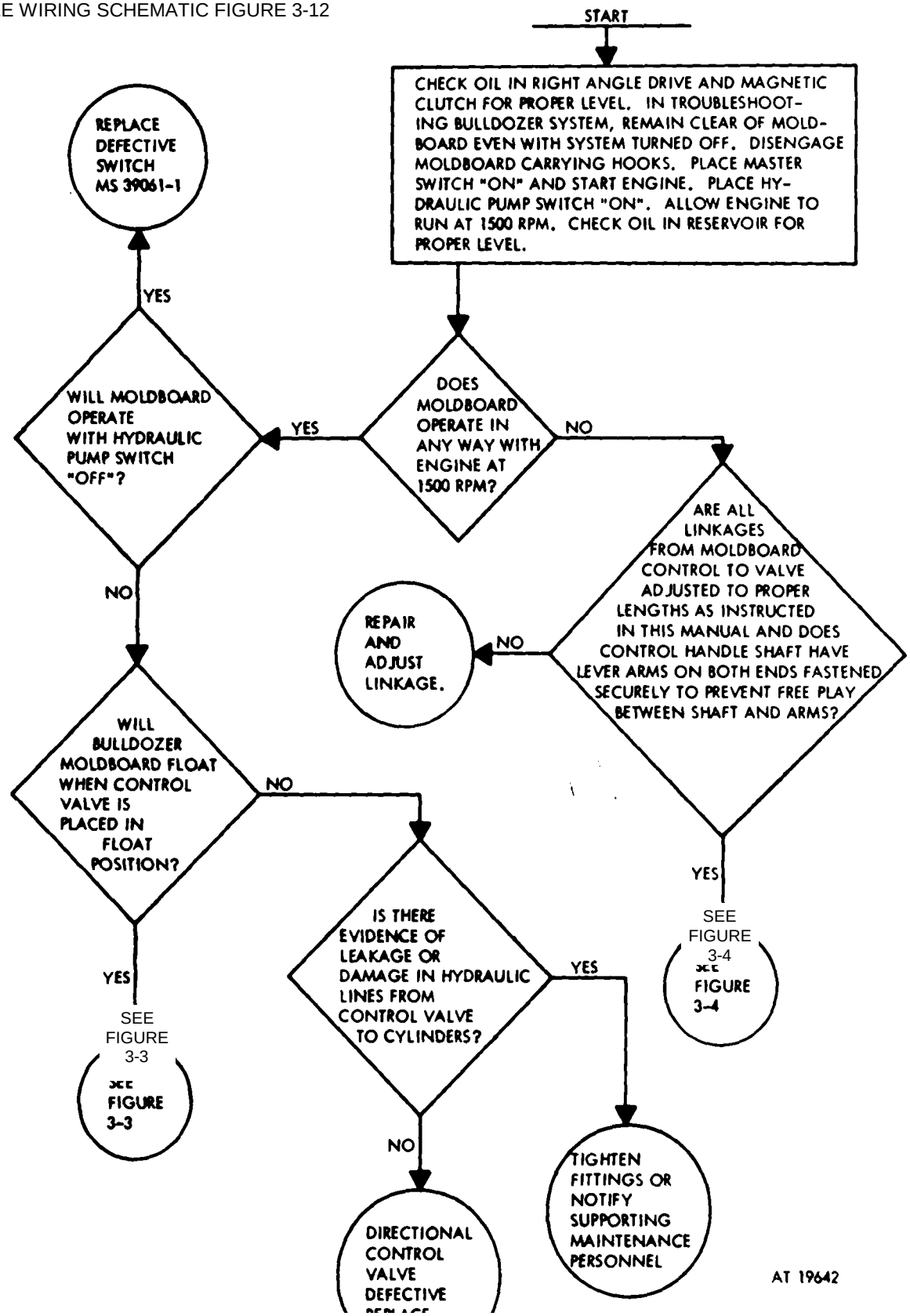

Figure 3-2. Troubleshooting (sheet 1 of 9).

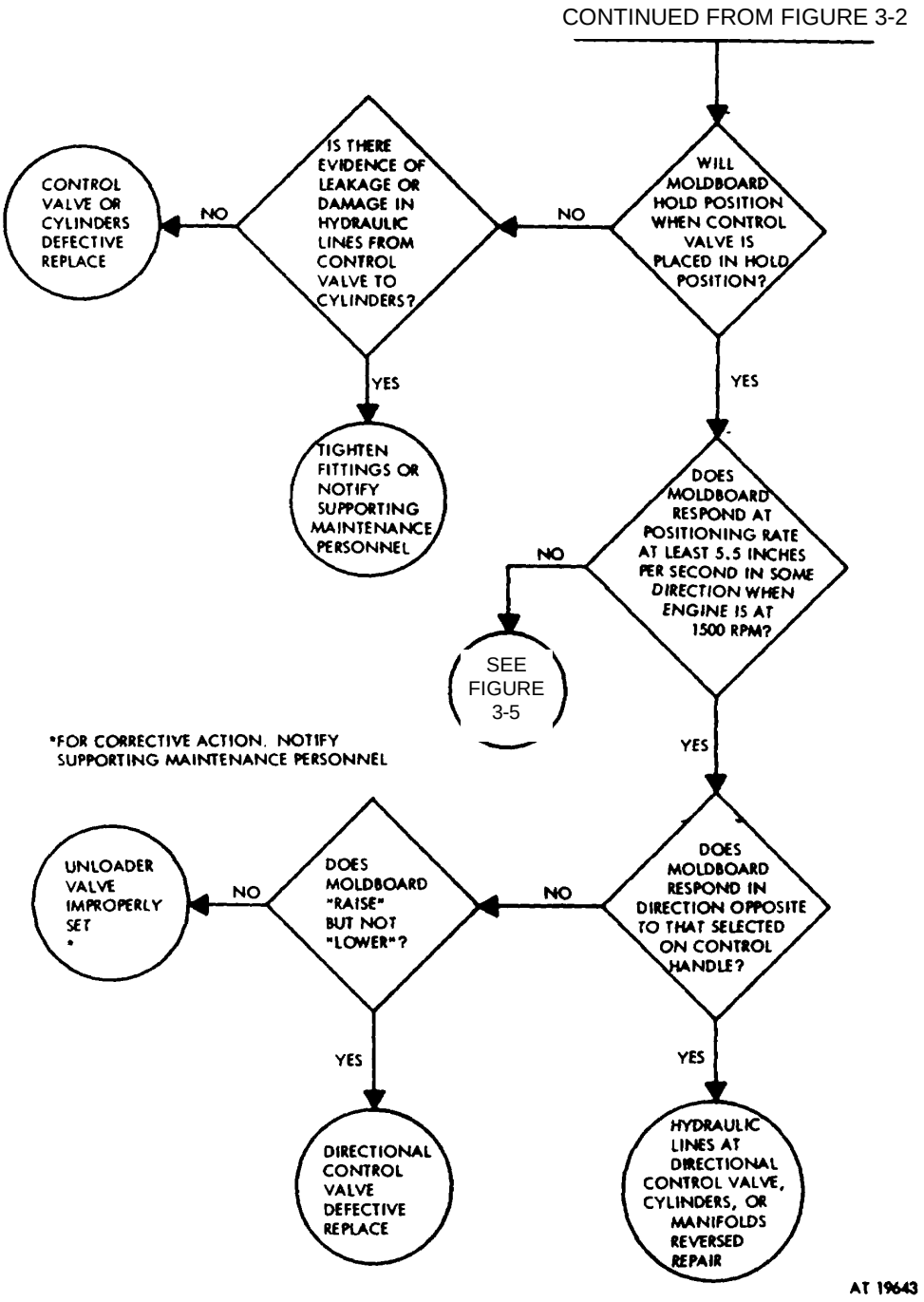

Figure 3-3. Troubleshooting (sheet 2 of 9).

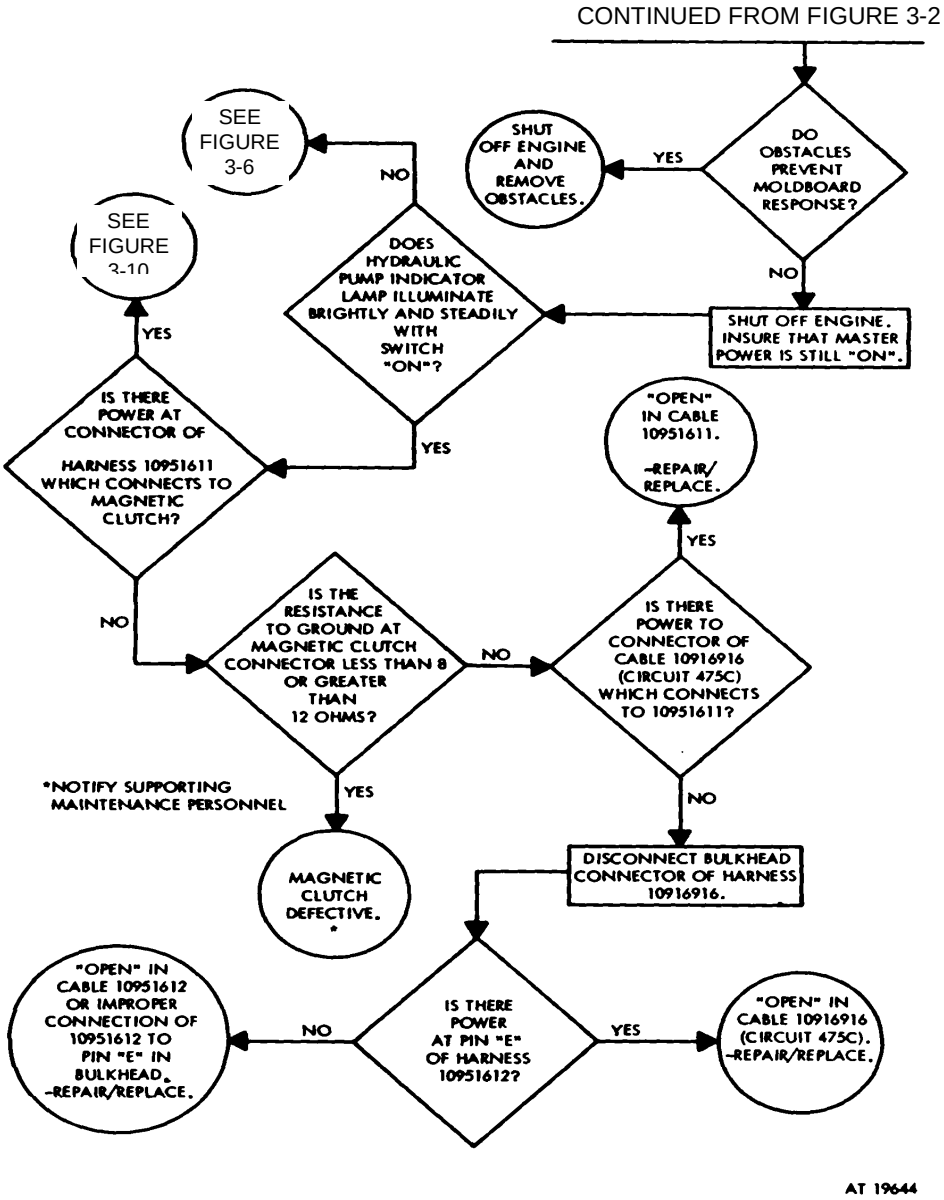

Figure 3-4. Troubleshooting (sheet 3 of 9).

CONTINUED FROM FIGURE 3-3

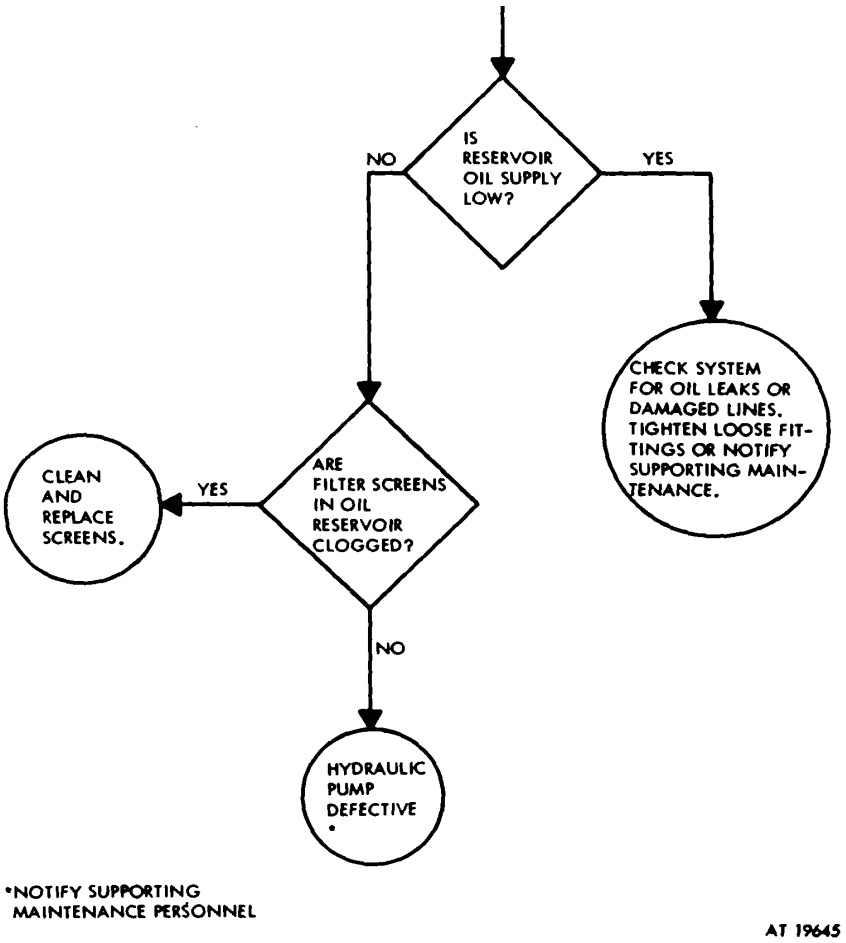

Figure 3-5. Troubleshooting (sheet 4 of 9).

CONTINUED FROM FIGURE 3-4

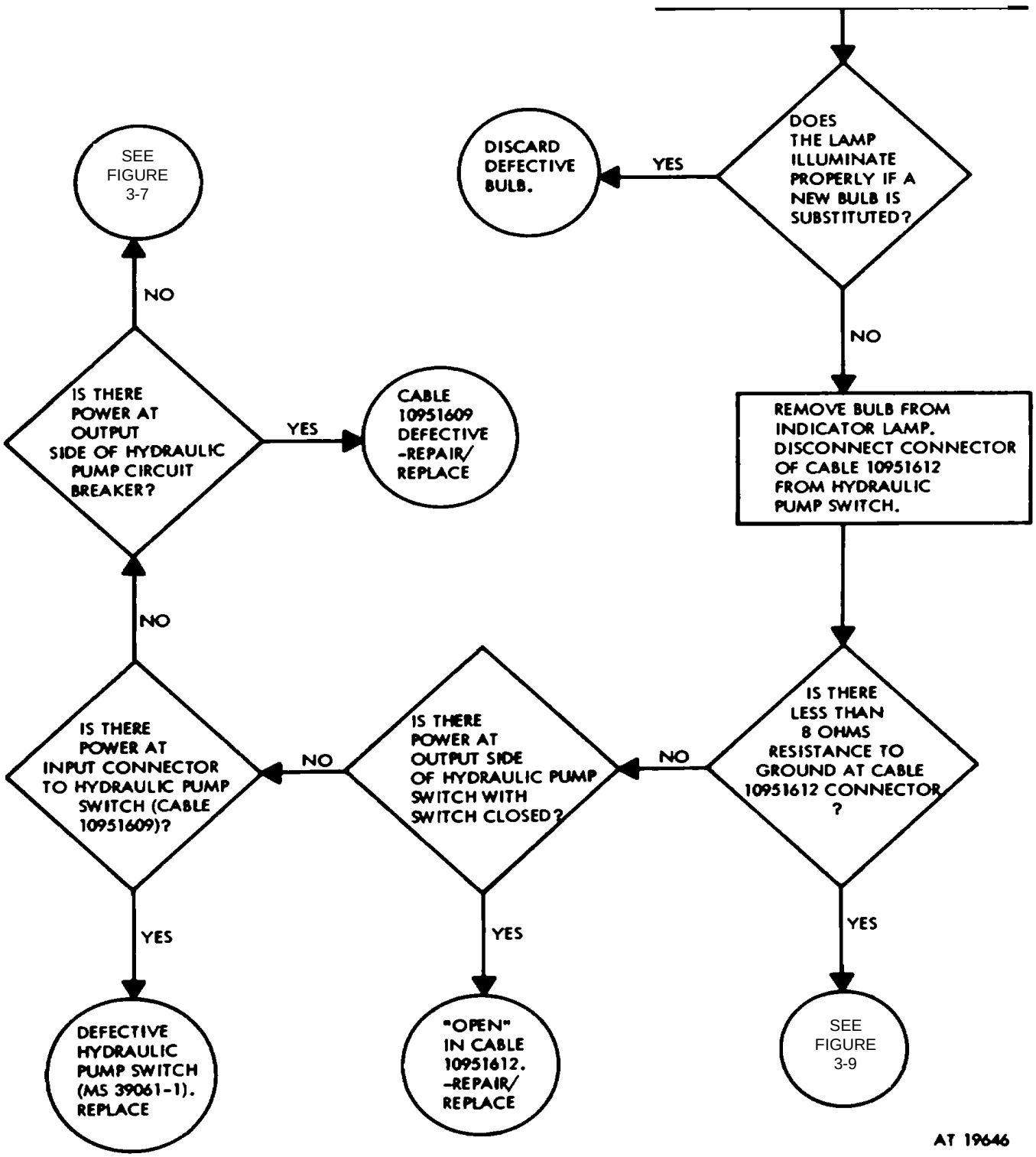

Figure 3-6. Troubleshooting (sheet 5 of 9).

CONTINUED FROM FIGURE 3-6

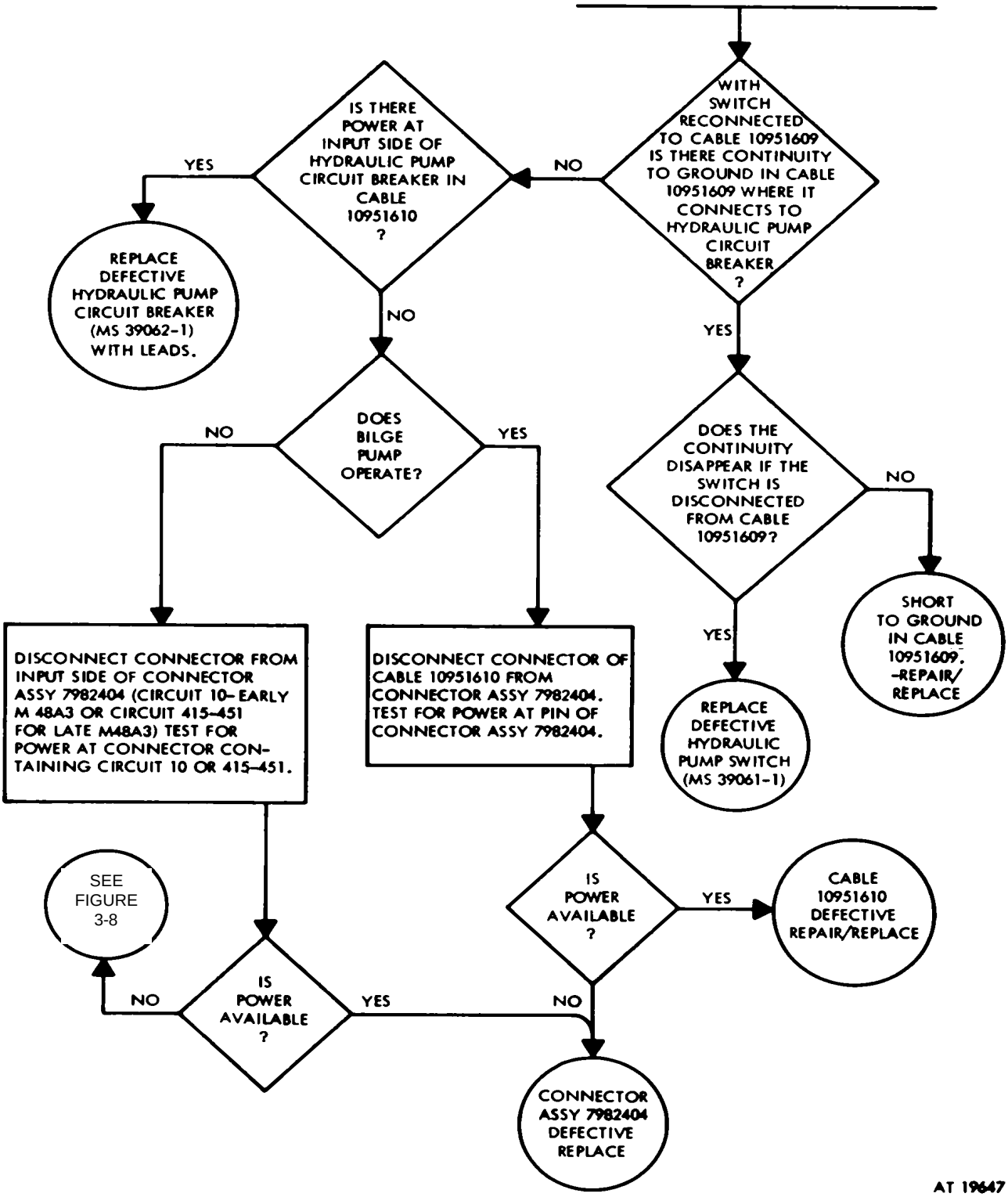

Figure 3-7. Troubleshooting (sheet 6 of 9).

CONTINUED FROM FIGURE 3-7

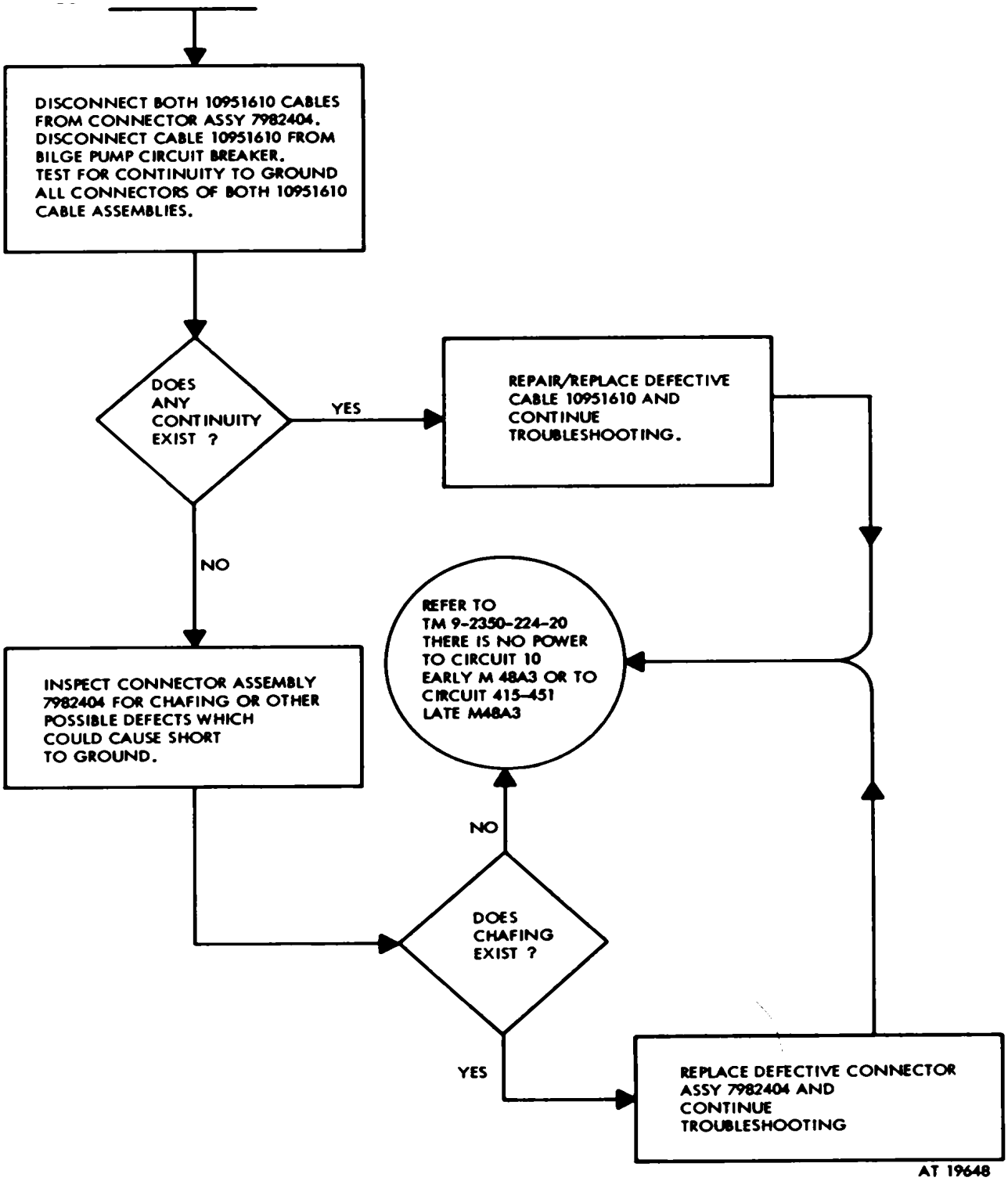

Figure 3-8. Troubleshooting (7 of 9).

CONTINUED FROM FIGURE 3-6

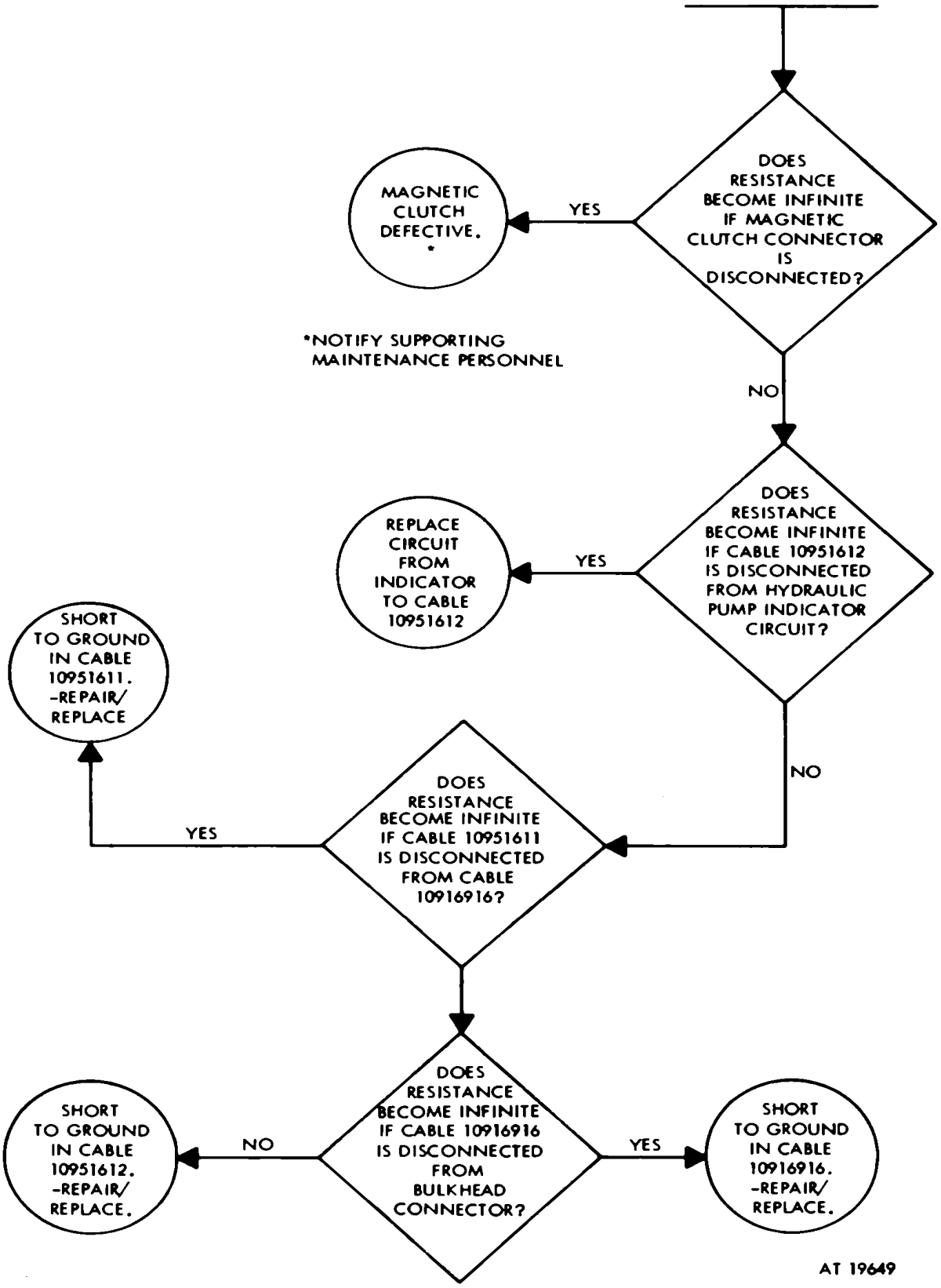

Figure 3-9. Troubleshooting (sheet 8 of 9).

CONTINUED FROM FIGURE 3-2

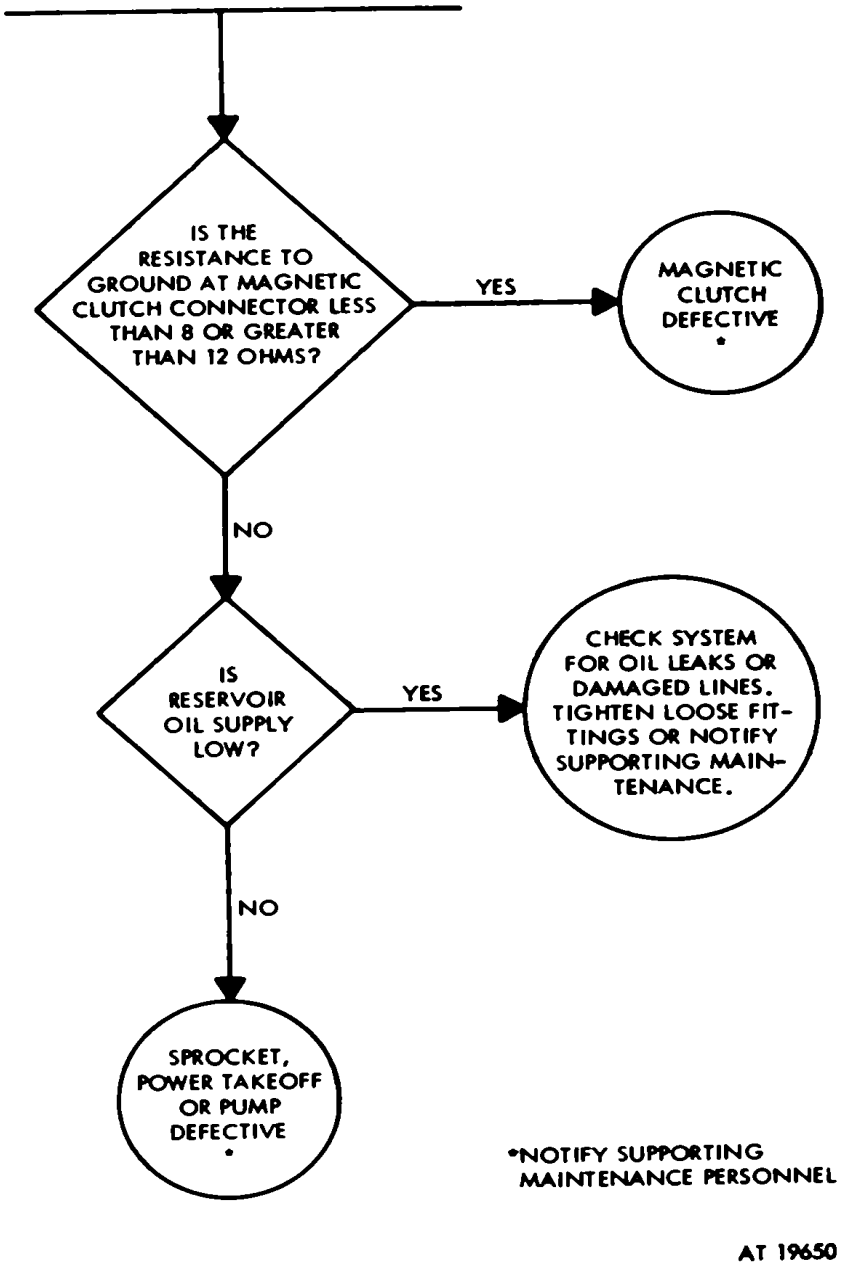

Figure 3-10. Troubleshooting (sheet 9 of 9).

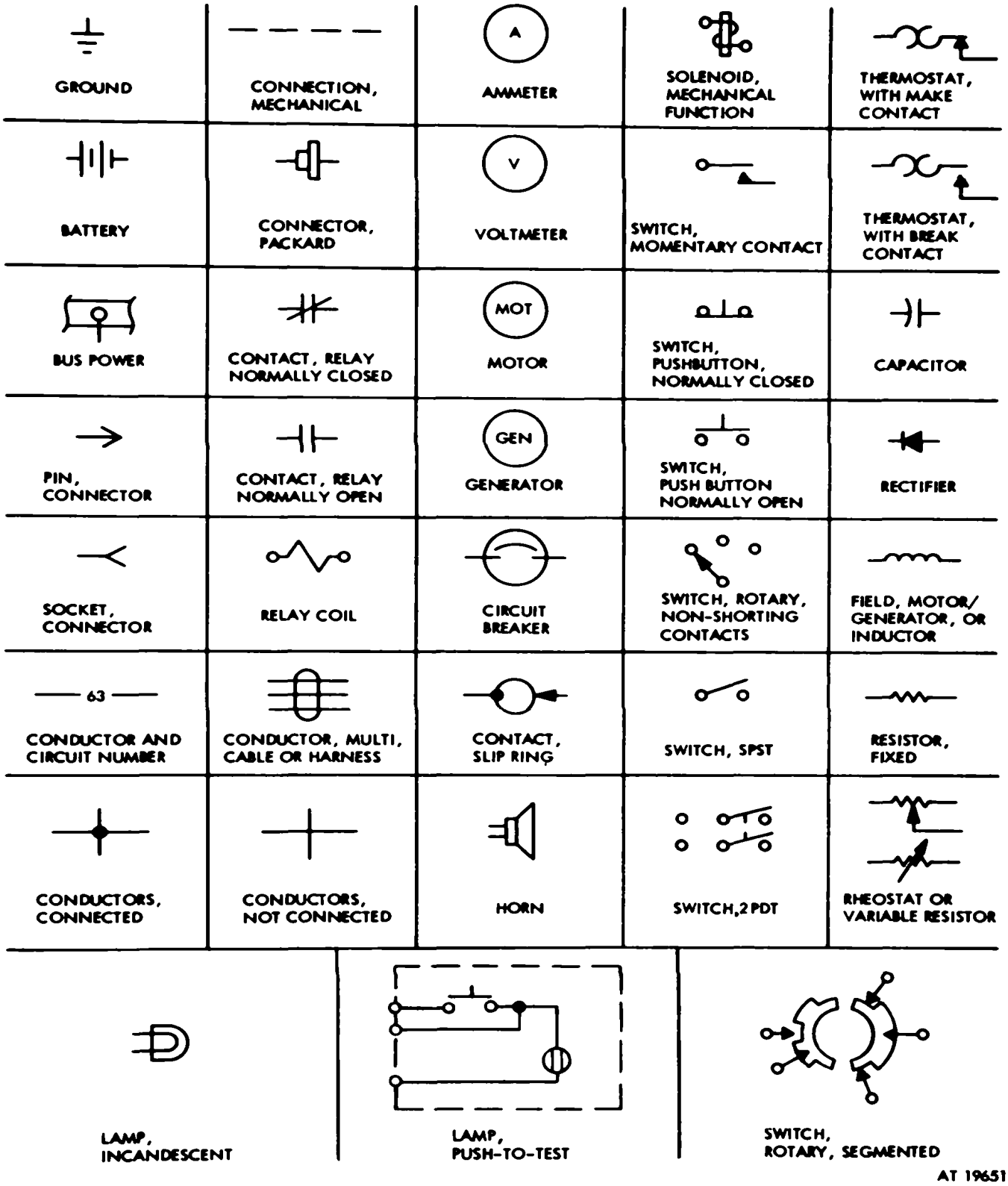

Figure 3-11. Electrical symbol

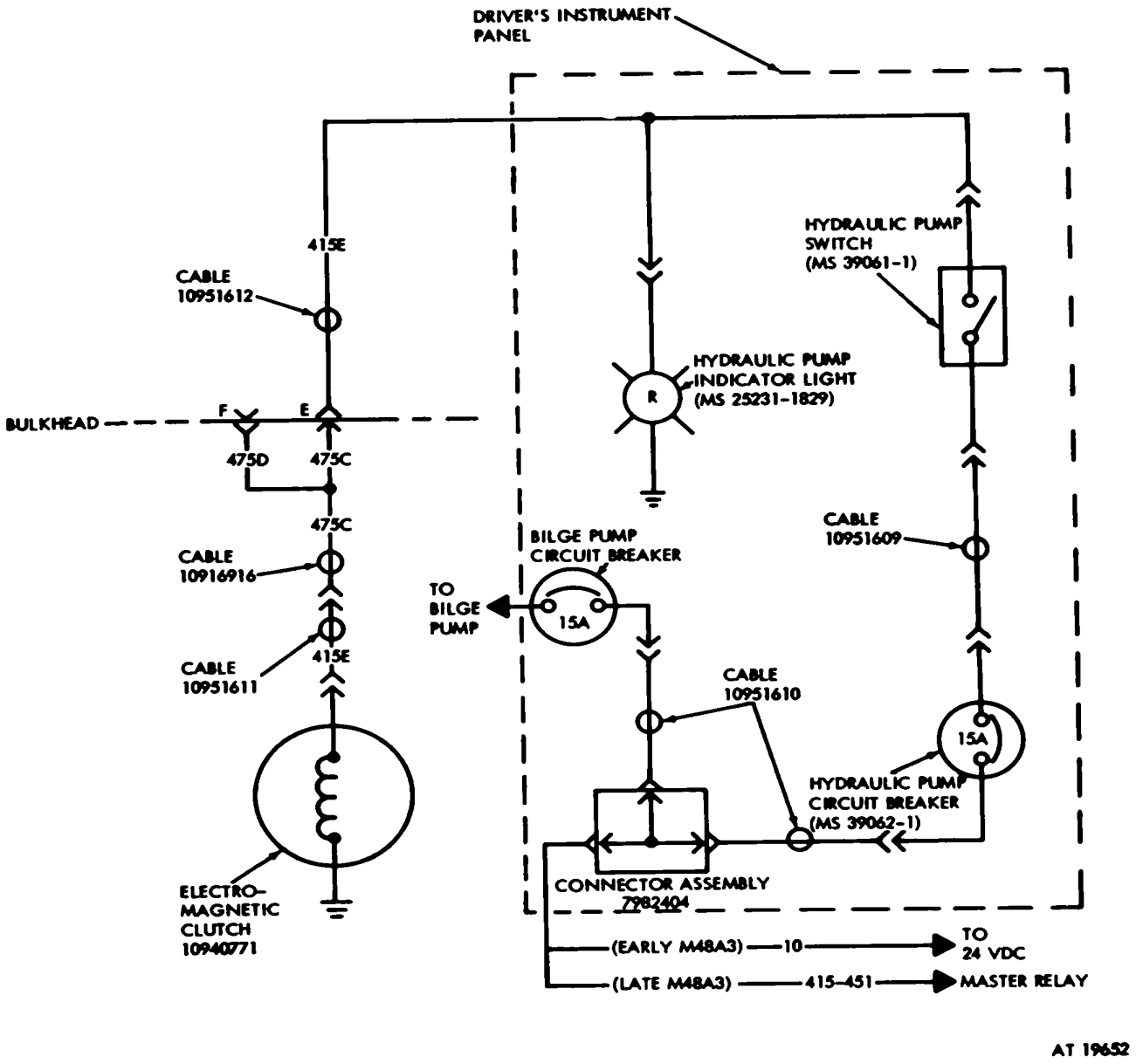

Figure 3-12. Bulldozer electrical circuit - wiring diagram.

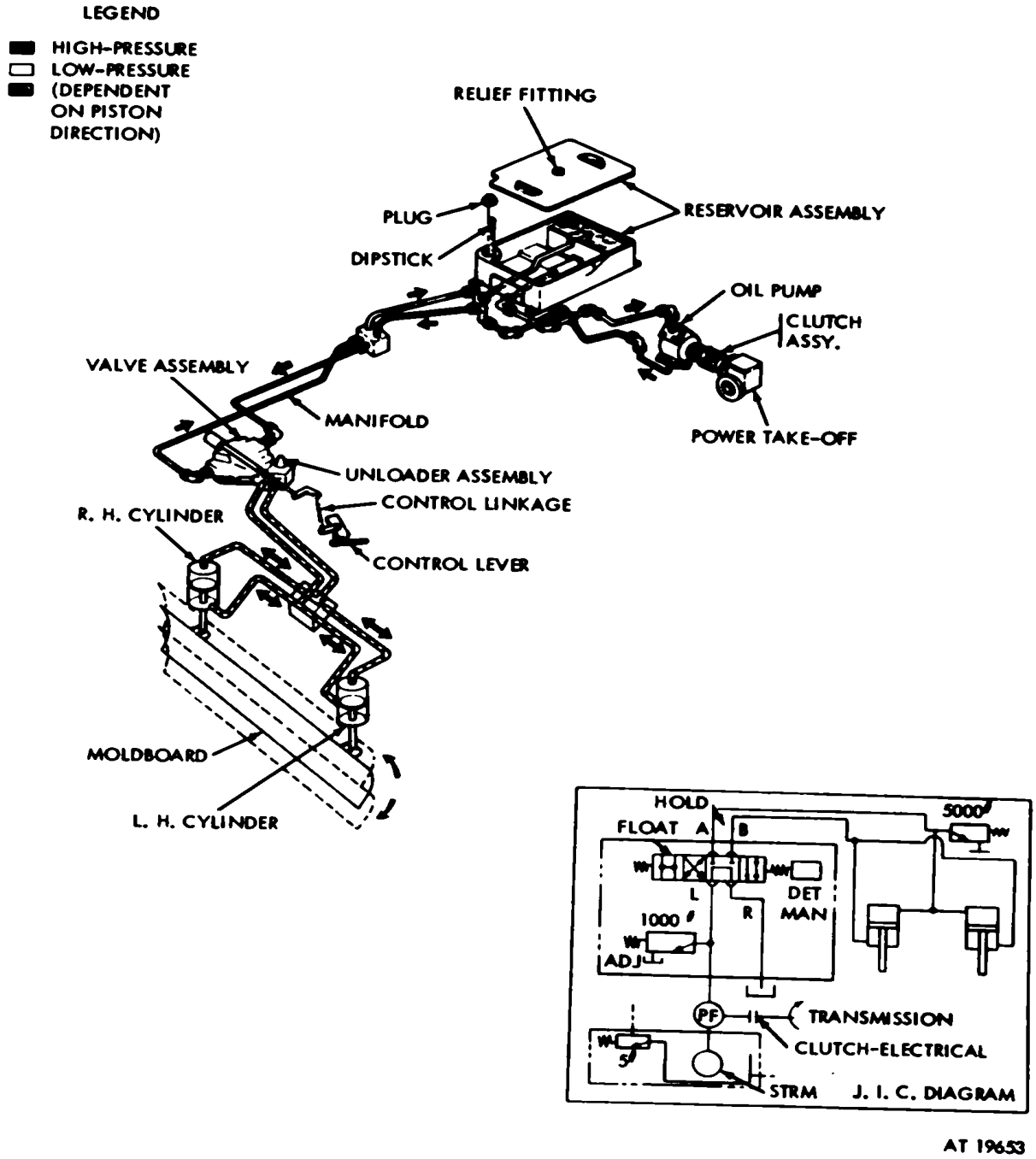

Figure 3-13. Bulldozer hydraulic system - schematic diagram.

a. The symbols used in the troubleshooting routines have definite meanings. Diamonds enclose "Yes" or "No" questions, rectangles enclose special instructions, and circles enclose problem solutions (conclusions) or continuation references to other routines.

b. Each troubleshooting routine has a schematic diagram reference (s) keyed to it. The harness-to-view index (electrical system only) lists the harness numbers on schematic diagram in numerical order. Next to each harness number is a locational view reference and related circuit numbers.

c. In troubleshooting routines, there are many questions (enclosed in diamonds) that carry implicit actions using standard operating procedures For example, a question such as "Will electromagnetic clutch operate?" implies that the mechanic must activate the control switch to see if the electromagnetic clutch will operate.

d. The conclusions in the troubleshooting routines (enclosed in circles) specify the corrective action that should be taken. In reaching a conclusion, the part most likely to have failed is noted. This conclusion does not eliminate the possibility that associated components (as wiring to the part) may be at fault. With a conclusion such as "Repair/Replace Electromagnetic Clutch," the mechanic has a responsibility to check the complete hook-up of the wiring and mechanical attachments and make necessary repair. Repair implies that action is needed to put the part back in service as dictated by the Maintenance Allocation Chart. This may include a complete replacement of authorized components by any action required.

e. The limitation of the troubleshooting routine is important to recognize. One fault may cause another so that logic will not necessarily uncover both. A short circuit condition, for instance, will in many cases be manifested as an open circuit breaker. Replacement of the circuit breaker will not eliminate the short circuit condition. The mechanic has a responsibility to visually inspect harnesses for obvious conditions such as frayed insulation or severed conductors and make necessary repairs prior to troubleshooting. The same troubleshooting routine may have to be used more than once. The user should not be discouraged from searching for two or more interacting faults. Such malfunctions present the problems which can only be countered by a ready knowledge of the vehicle and systems, and a general troubleshooting "know how." Reliance is often placed on the skill of the mechanic to pinpoint the actual fault from a general localization of possible faults.

f. The multimeter does not provide the loading required to detect poor conductance. If a circuit were loaded, the voltage or loss of voltage is assumed to be at the point of measurement To preclude misleading indications, the circuit under test should be loaded as would be the case if a test lamp were employed.

g. In high current circuits such as the starter, generator and battery, the necessity of almost perfect conductance must be recognized. The mechanic must check all connections, especially connector pins and sockets. Components terminal must be clean, bright, and bonded securely. A fraction of an ohm resistance at a connection not measurable with an ohmmeter can cause malfunction.

Table 3-5. Troubleshooting Routine Index

Components and Systems	*Troubleshooting Routine Figure No.*	*Schematic Figure No.*
Bilge pump	3-7	3-12
Cable	3-4	3-12
	3-6	3-12
	3-7	3-12
	3-8	3-12
	3-9	3-13
Circuit breaker	3-6	3-12
Connector	3-8	3-12
Control handle	3-3	3-13
Control valve	3-2	3-13
	3-3	3-13
Cylinder	3-3	3-13
Filter screen	3-5	3-13
Fitting	3-3	3-13
	3-5	3-13
Harness	3-4	3-12
Hydraulic pump	3-5	3-13
	3-7	3-13
	3-9	3-13
Hydraulic pump switch	3-6	3-12
Lamp	3-4	3-12
	3-6	3-12
Lines	3-2	3-13
	3-3	3-13
Linkage	3-2	3-13
	3-3	3-13
Magnetic clutch	3-2	3-12
	3-4	3-12
	3-9	3-12
	3-10	3-12
Manifold	3-3	3-13
Moldboard	3-2	3-13
	3-3	3-13
	3-4	3-13
Pump switch	3-2	3-12
Reservoir	3-2	3-13
	3-5	3-13
	3-10	3-13
Right angle drive	3-2	3-12
Switch	3-7	3-12
Unloader	3-3	3-13

Table 3-6. Harness-To View Index - Electrical wiring

Note. This index provides information to support the troubleshooting routines. All harness, cable and lead assemblies are listed in numerical order. The circuit numbers are also listed to facilitate the location of a view or harness assembly. Extensive wiring assemblies are identified on more than one view.

Harness No. On Electrical Schematic	*Locational View Figure No*	*Circuit No.*
10916916	3-12	415C and 415D
10951609	3-12	
10951611	3-12	415E
10951612	3-12	415E

3-47. Multimeter Method of Electrical Troubleshooting.

3-48. General. Direct current electrical circuits and components are tested by checking continuity and measuring resistance to determine if the circuit or component under test has a continuous electrical path through the cables and units connected between the two test points. Multimeter 6625-543-1438 (figure 3-14) indicate on preselected, calibrated scales, the resistance of the circuit or component being tested. When using the multimeter for testing a multiple-jointed conductor, isolate each section of the conductor to determine the location of the open or short circuit.

3-49. Resistance Tests. All electrical circuits possess some resistance. Some resistances, however, are so small and others so large that they cannot be read on the same scale. When a reading, using is obtained, it indicates the circuit has continuity (no break or openings). The following procedure must be followed to perform the continuity tests:

a. Place the SCALE SELECTOR OUTPUT-A. C.-D.C. switch in the D.C. position.

b. Rotate the range selector switch to the required range.

(1) R x 1 to measure resistance between 0 and 2,000 ohms.

(2) R x 100 to measure resistance between 0 and 200,000 ohms.

(3) R x 10,000 to measure resistance between 0 and 20 megohms.

c. Plug the black ad into the jack marked COMMON and the red lad into the jack marked "+". Short the ends of the leads together and turn the ZERO OHMS knob until the pointer is at zero.

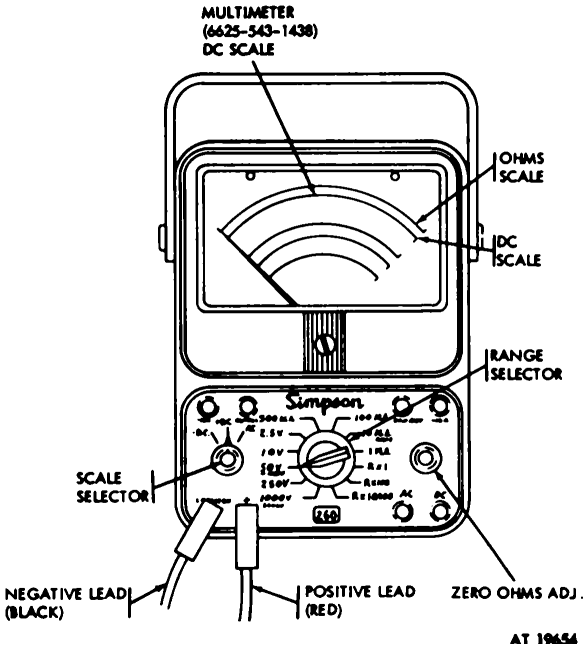

Figure 3-14. Multimeter (6625-543-1438).

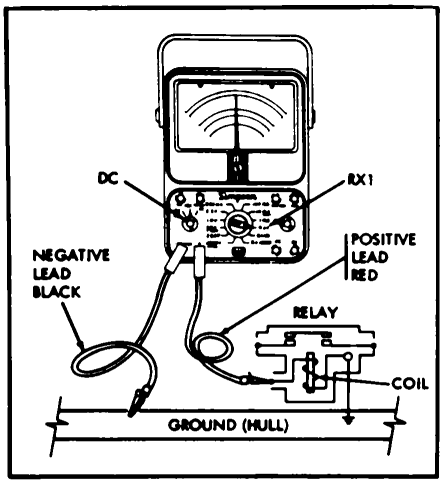

USE TO MEASURE RESISTANCE OF RELAY COILS OR RESISTORS AND SHORT CIRCUITS.

1. SET SCALE SELECTOR SWITCH ON DC.
2. SET RANGE SELECTOR SWITCH ON R x 1.
3. TOUCH METER LEADS TOGETHER AND TURN ZERO OHMS ADJUSTER TO POSITION NEEDLE ON "0".
4. ATTACH NEGATIVE LEAD TO GROUND.
5. TOUCH POSITIVE LEAD TO COMPONENT POSITIVE TERMINAL.
6. FULL SCALE READING INDICATES OPEN CIRCUIT.

AT 19655

Figure 3-15. Resistance Test.

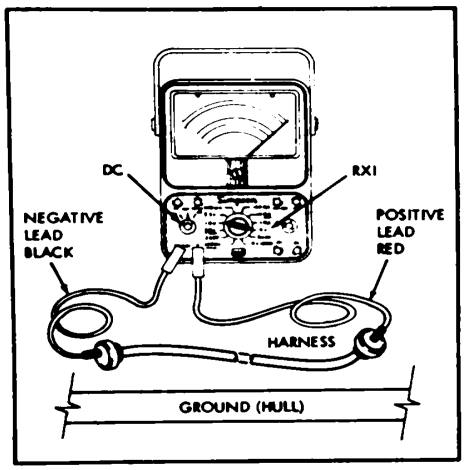

USE TO TEST FOR OPEN CIRCUITS

1. SET SCALE SELECTOR SWITCH ON DC.
2. SET RANGE SELECTOR SWITCH ON R x 1.
3. ATTACH NEGATIVE LEAD TO CIRCUIT CONNECTOR (ONE END OF CABLE OR HARNESS).
4. TOUCH POSITIVE LEAD TO CIRCUIT CONNECTOR (OTHER END OF CABLE OR HARNESS).
5. NO NEEDLE DEFLECTION INDICATES OPEN CIRCUIT.

AT 19656

Figure 3-16. Continuity test.

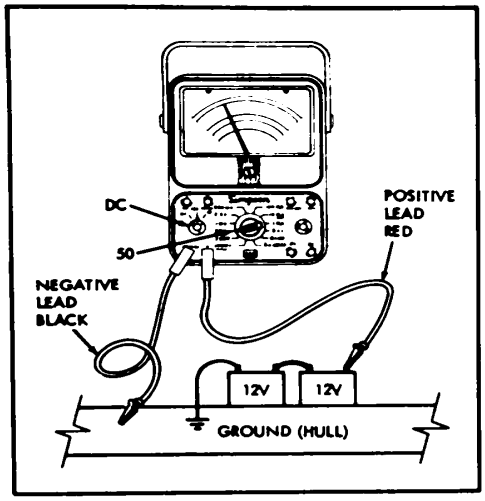

DC VOLTAGE TEST

USE TO MEASURE BATTERY OR GENERATOR (VOLTAGE)

1. SET SCALE SELECTOR SWITCH ON DC.
2. SET RANGE SELECTOR SWITCH ON 50 V.
3. CONNECT NEGATIVE LEAD OF METER TO GROUND (COLORED BLACK OR MARKED WITH MINUS (-) SIGN).
4. TOUCH POSITIVE LEAD OF METER TO (POSITIVE) TERMINAL POST OF BATTERY. IF NEEDLE DOES NOT MOVE OR INDICATE VOLTAGE, A MALFUNCTION EXISTS.

AT 19657

Figure 3-17. D.C. voltage test.

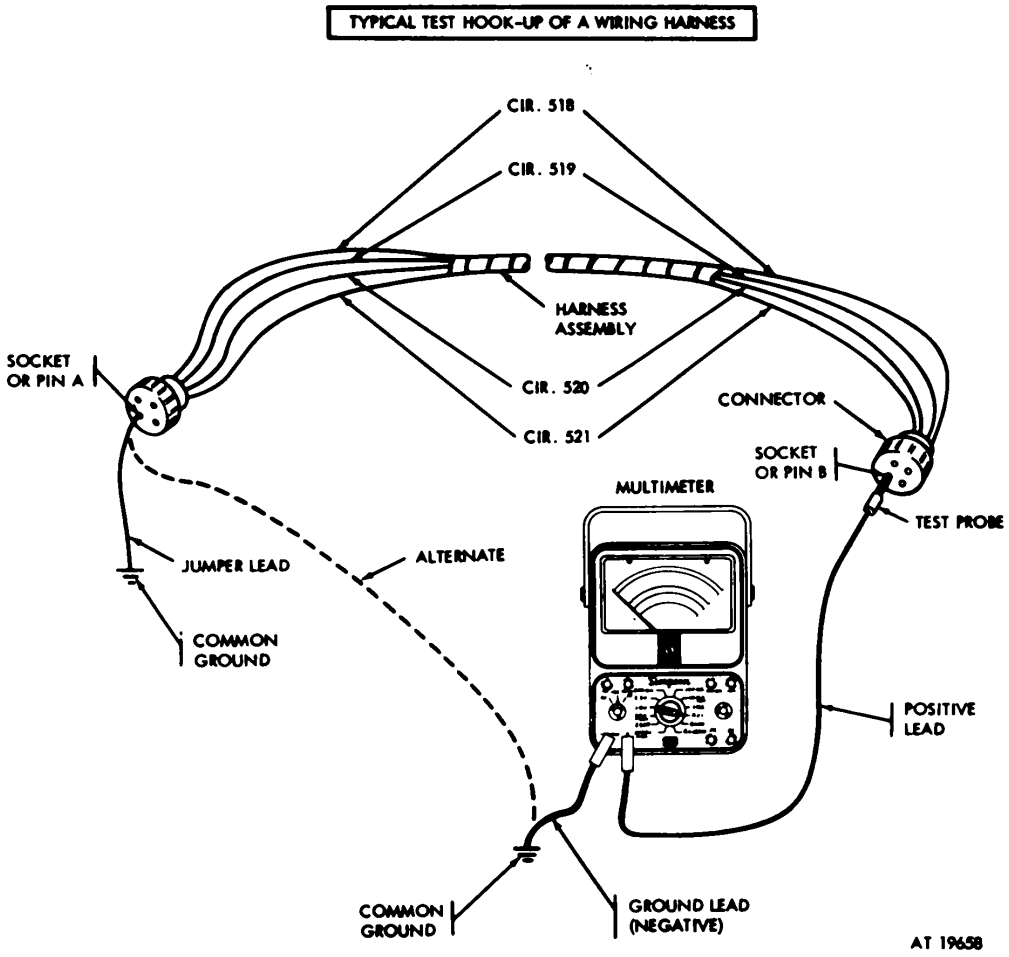

Figure 3-18. Electrical harness or cable test.

Caution: Never attempt to make resistance tests until all sources f power connected to the circuit or device to be tested are disconnected. The muitimeter will be damaged if this procedure is not followed.

d. Separate the ends of the test leads and clip the leads across the portion of the circuit or component being tested. (Either one of the two colored leads may be clipped to the test points.)

e. Read the ohms on the black area at the top of the scale.

***Note*. For range R x 1, read the fur directly; for range R x 100, multiply the reading indicted by 100 or add two zeros l, the reading; for range R x 10,000, multiply the reading indicated by 10,000 or add four zero to the reading.**

Example: A 20,000-ohm resistance should be checked on the R x 100 range scale. The reading on the scale will be 200. Adding two zero will give 20,000 ohms.

3-50. Infinite and Zero Multimeter Readings.

a. Infinite reading. An infinite reading is open circuit (direct-current) reading. There will be no movement of the multimeter pointer when an open circuit exists. Infinite position on the ohmmeter range scale is marked with the symbol oo .

b. Zero reading. A zero reading indicates a continuous circuit with too small resistance to be measured with multimeter.

3-51. Resistance Readings. A resistance reading is taken to determine either the electrical condition of a component or circuit continuity. When the correct resistance of the component or circuit is known, a resistance test will indicate, after interpretation of the readings, the fault in the circuit. Resistance readings of components in the equipment are nominal only and may vary slightly from equipment to equipment and also depend upon the accuracy and condition of the multimeter being used to perform the required test.

Caution: Never attempt to make resistance tests until all sources of power connected to the circuit or device to be tested are disconnected. The multimeter will be damaged if this procedure is not followed.

3-52. Troubleshooting Electrical Harnesses and Cables. The following method should be used to determine if a malfunction exists in a harness or cable:

a. Visually inspect harness or cable for breaks cuts or other damage that could cause a "short" or "open" circuit.

b. Disconnect both ends of the harness or cable containing the circuit.

c. Connect a jumper lead between the circuit socket or pin contact and a common ground (hull, turret, etc.).

d. Attach the "ground" (negative) led of the multimeter to the common ground.

e. Present multimeter for continuity test.

f. Check circuit for continuity by touching socket or pin contact in opposite end of harness or cable with meter (positive) lad test probe.

g. Full-sale deflection of needle indicates a complete circuit. An intermittent or no needle deflection indicates an "open" circuit.

h. Install new harness or cable if circuit is "open" (broken).

***Note.* Harness or cables may be repaired if damage is light.**

Caution: Set range selector on R x I scale and voltage (V) selector switch on "0' for all continuity tests on wiring harnesses and cables. Range selector switch must be set on 50 V for all voltage tests of wiring harnesses and cables unless otherwise specified.

Section V. HEADLIGHT ASSEMBLIES

3-53. General.

3-54. This section contains instruction for removal and installation of the headlight assemblies.

3-55. Description and Data.

3-56. Description. Two headlight clusters remounted on the front of the hull; each is protected by a brush guard. The headlight assemblies are elevated above the

height of the moldboard to facilitate light projection when moldboard is in raised position. Each headlight cluster has two seal-beam units: a service drive headlight and a blackout drive (infrared) headlight. The blackout drive unit is a standard seal-beam lamp with a special infrared filter placed on the light beam. A hooded blackout drive lamp and a blackout marker lamp complete the headlight assembly. The blackout drive lamp is connected to the vehicle power on the left side only.

3-57. Data.

Headlight Assemblies

Service drive
headlamp 24V sealed beam, no. 4811

Blackout drive (infrared)
headlamp 24V seed beam, no. 4811

Blackout drive lamp 32cp, 24-28V, no. 1683

Blackout marker lamp 3 cp, 24-28V, No. 1251

3.58. Replace of Brush Guards

3-59. Removal and Installation. Refer to figure 3-19 for removal and installation instructions.

3-60. Replacement of Headlight and Adapter.

3-61. Removal and Installation. Refer to figure 3-19 for removal and installation instruction.

3-62. Cleaning Inspection and Repair. Refer to TM 9-2350-224-20 for cleaning, inspection_and repair and replacement instructions.

3-63. Disassembly and Assembly. Refer to TM 9-2350-224-20 for disassembly and assembly.

3-64. Headlight Adjustment. Refer to TM 92350-224-20 for headlight adjustment.

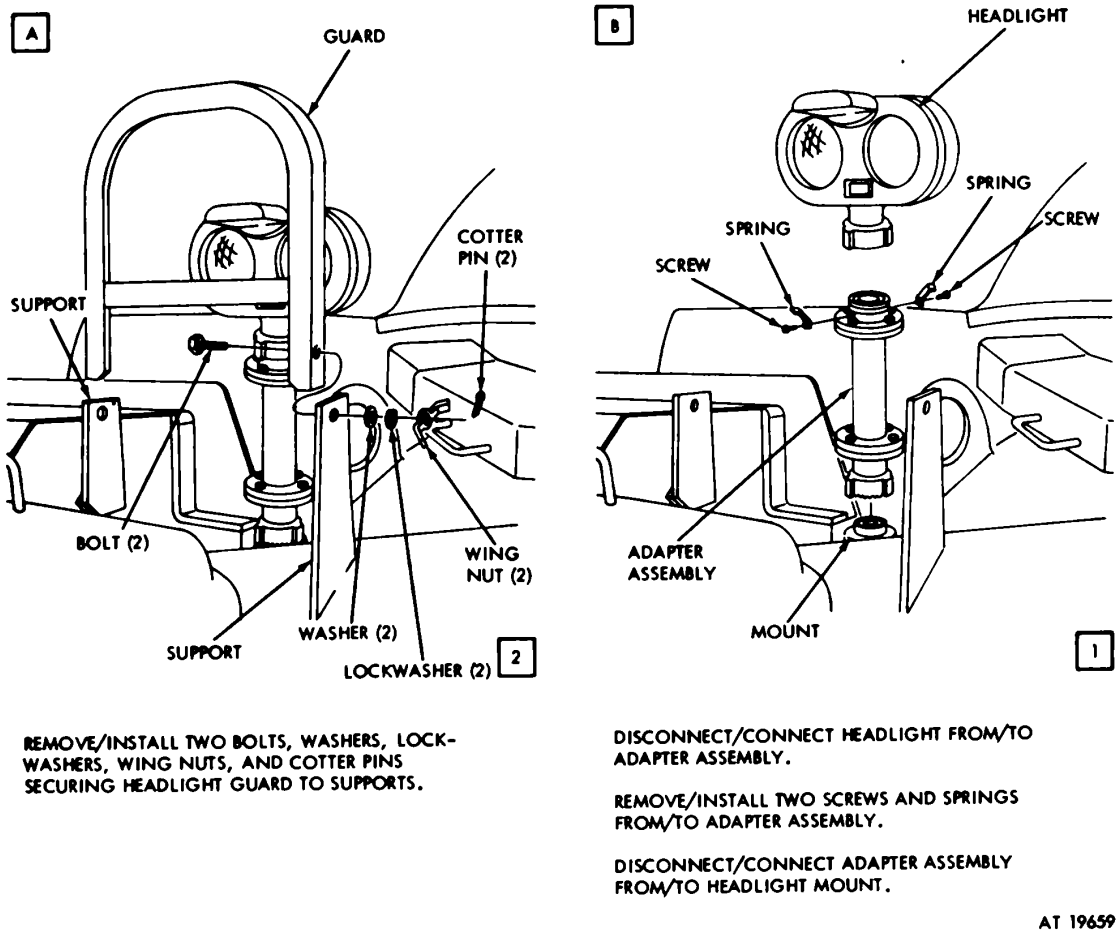

Figure 3-19. Removal or installation of brush guard and adapter assembly.

Section VI. HYDRAULIC CYLINDER PIPING AND GUARDS

3-65. General.

3-66. This section covers the description and maintenance of the hydraulic cylinder piping and guard & Organizational maintenance of the components consist of: replacement of armor guards for cylinders and hydraulic system; servicing and replacement of hydraulic valves, hoses, lines, tubes and fittings; replacement of hydraulic cylinder and ram assemblies; servicing and replacement of reservoir assembly; and servicing and replacement of hydraulic line filters and filter elements.

a. Hydraulic Lines and Fittings.

(1) Removal. Before disconnecting a hydraulic line for removal, tag the line to avoid loss of identity. Handle lines carefully to prevent damage. To

remove the lines and fittings. proceed as follows:

(a) Isolate the line and relieve hydraulic system pressure.

(b) To disconnect a hydraulic line, hold the connector firmly with one wrench and apply the turning force to the nut with another wrench. Disconnect and remove the line assemblies at the connections with associated parts, and between lines at elbows, unions, and tees as required. Be sure to remove line clips, if present, before attempting to remove the line.

(c) Plug all open hydraulic lines and ports with appropriate plugs to prevent entry of foreign matter.

(2) Installation. Assure that the connector is installed in the final position on the component to which the connection will be made. To install lines and fittings, proceed as follows: (a) Remove protective plugs from ends of line assemblies and clean line assemblies thoroughly, using drycleaning solvent or mineral spirits paint thinner. Dry with dry compressed air.

Note. **If dry compressed air is not available, place line assembly on a previously cleaned area and allow to set for a minimum of five minutes prior to installation.**

3-67. Description.

3-68. The system pressure is developed by a hydraulic pump unit mounted on the transmission. The pump unit is driven through the right-angle drive, which engages the transmission power take-off. A magnetic clutch engage the pump unit with the right-angle drive. System oil is contained in a 15-gallon reservoir mounted on the rear right fender. A selector valve, controlled by the driver, directs oil to the hydraulic cylinders.

3-69. Purging Hydraulic System of Air. After replacement of any hydraulic components (valves, filters, ram cylinders, tubing, pumps, etc) or after draining and refilling the reservoir with oil, air must be eliminated from the hydraulic system. Following the replacement of any components, fill reservoir (see lubrication order LO 92590-213-12) and check system for leaks. Activate the hydraulic system and operate the moldboard up and down several times. This action will eliminate air from the lines and restores positive reaction relative to the control levers. Check reservoir oil level and refill if necessary.

Note**. If poor response to the controls persists, notify supporting maintenance personnel.**

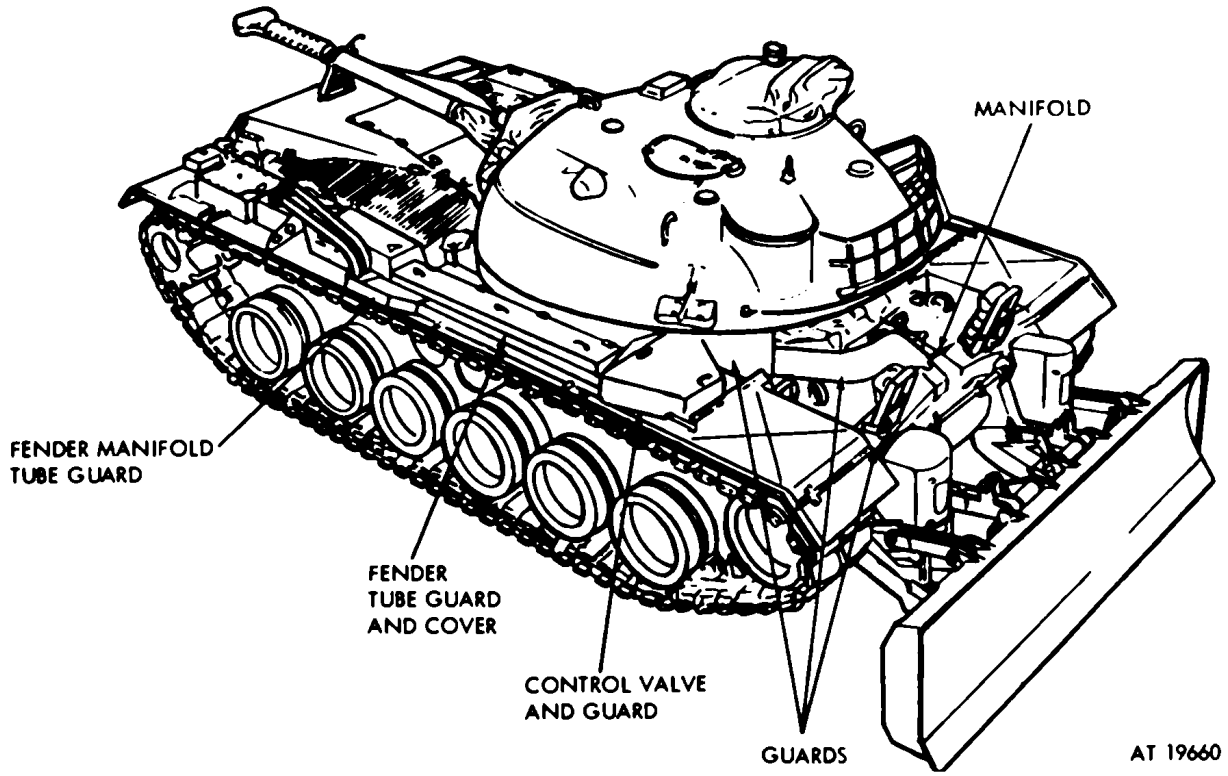

Figure 3-20. Guards and covers for hydraulic system lines and control linkage.

3-70. Draining Hydraulic System.

Warning: Do not remove drain plugs or open tubes while vehicle engine is running.

Note. **Provide a suitable container to catch oil when discharging tubes and fittings. When lines and fittings are disconnected, tape exposed ends to prevent entrance of foreign matter, and plug openings in hydraulic components.**

Caution: Relieve main hydraulic system pressure before relieving hydraulic subsystem pressure.

3-71. Draining the Reservoir. Refer to figure 3-21 for draining instructions.

3-72. Draining the Hydraulic Cylinders.
Refer to figure 3-22 for draining instructions.

3-73. Replacement of Armor Guards for Cylinders and Hydraulic Systems.

3-74. Removal and Installation. Refer to figures 3-23 through 3-25 for removal and installation instructions. Follow the alphabetical sequence of views for removal and the numerical sequence of views for installation.

3-75. Replacement of Hydraulic Valve, Hoses, Lines, Tubes and Fittings.

3-76. General.
The following general procedures apply to the removal and installation and connection of various hydraulic valves, hoses, lines, tubes and fittings used on the bulldozer hydraulic system. Refer to figures 3-26 through 3-31 for removal and installation instructions.

3-77. Removal. Hydraulic tubes and hose assemblies are banded with the assembly part number. To disconnect a line, proceed as follows:

Note**. Handle tubes and hoses carefully to avoid damage.**

a. Hold the component connector firmly with a wrench to prevent turning while loosening the line nut. Disconnect and remove the line assemblies at components and between lines at elbows, unions, and tee as necessary. Be sure to remove line clips and clamps, if present, before attempting to remove line.

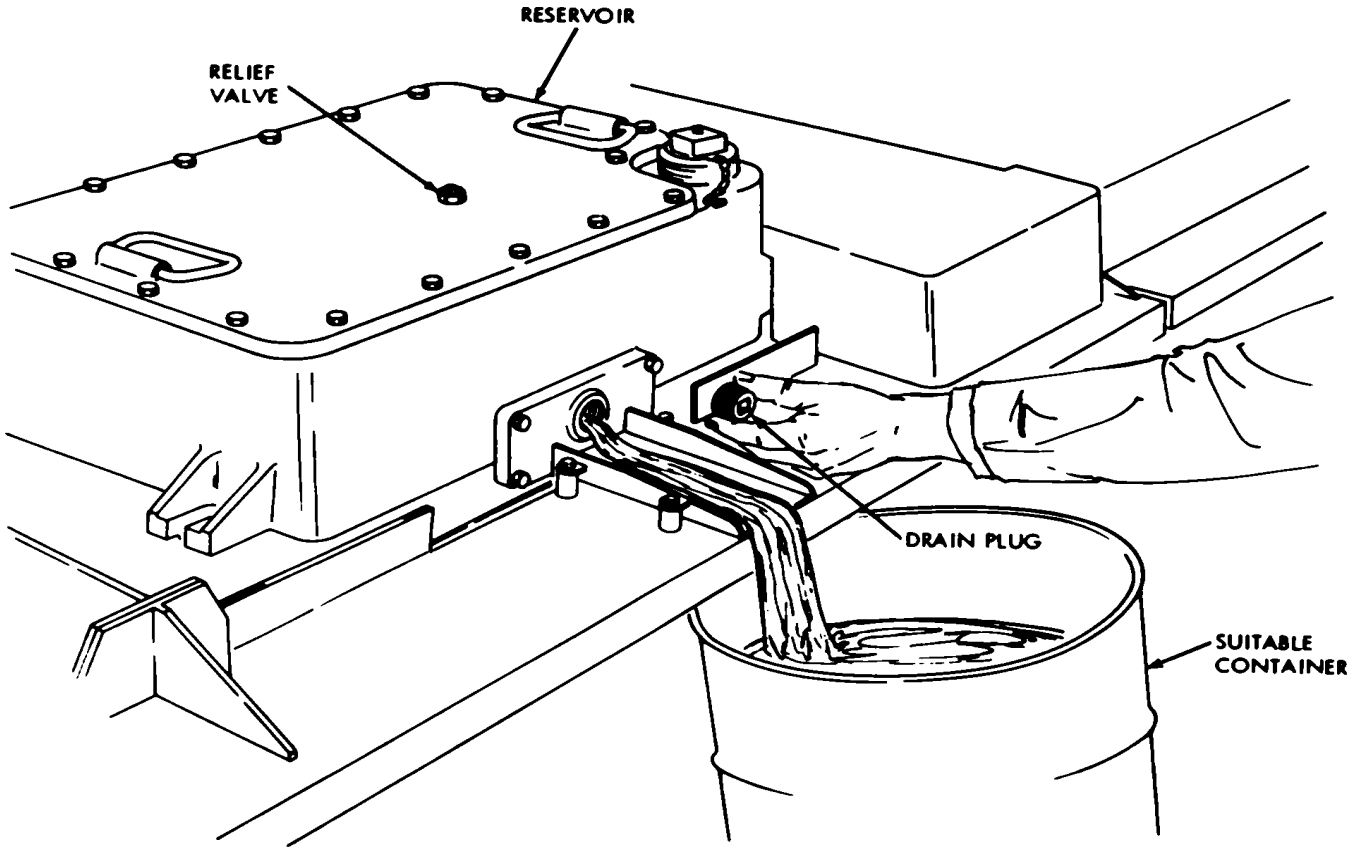

WARNING: DO NOT REMOVE DRAIN PLUG WHILE VEHICLE IS RUNNING.

OPEN/CLOSE RELIEF VALVE ON RESERVOIR COVER.

NOTE: PROVIDE SUITABLE CONTAINER FOR RESERVOIR OIL.

REMOVE/REPLACE DRAIN PLUG.

AT 19661

Figure 3-21. Draining the reservoir.

PRELIMINARY PROCEDURE:
DRAIN RESERVOIR (FIG. 3-21).

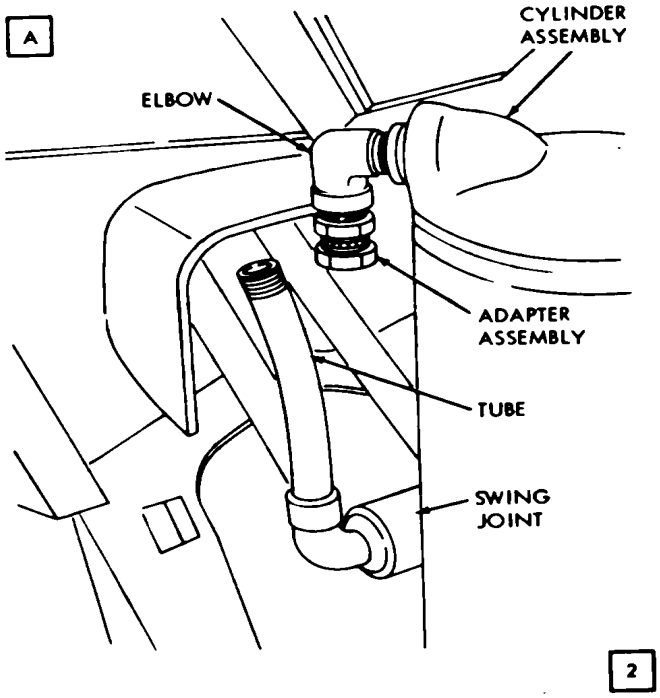

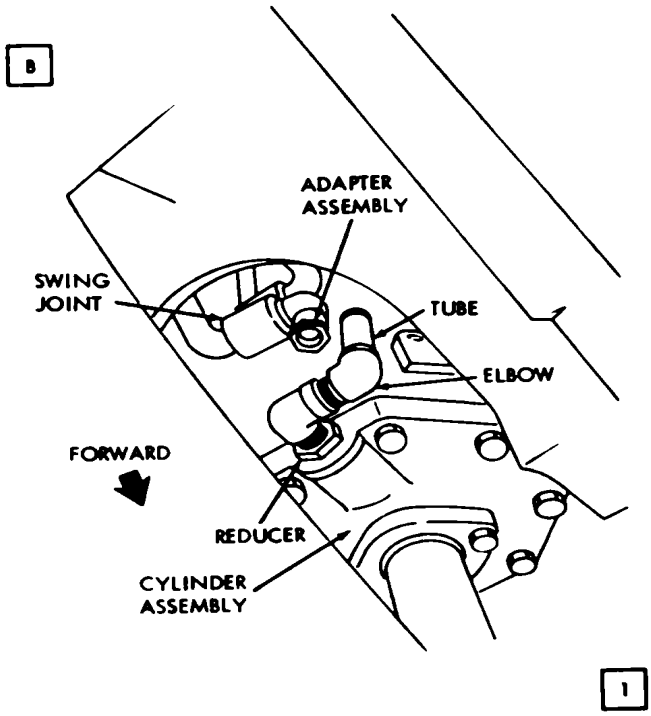

WARNING: DO NOT OPEN TUBES WHILE VEHICLE IS RUNNING.

NOTE. PROCEDURE IS THE SAME FOR BOTH LEFT AND RIGHT CYLINDERS.

WARNING: OPEN LINES CAREFULLY TO RELIEVE PRESSURE.

DISCONNECT/CONNECT TUBE FROM/TO ADAPTER ASSEMBLY.

DISCONNECT/CONNECT TUBE FROM/TO ADAPTER ASSEMBLY.

AT 19662

Figure 3-22. Draining the hydraulic cylinders.

PRELIMINARY PROCEDURE:
LOWER MOLDBOARD TO GROUND.
STOP VEHICLE ENGINE AND APPLY BRAKES.

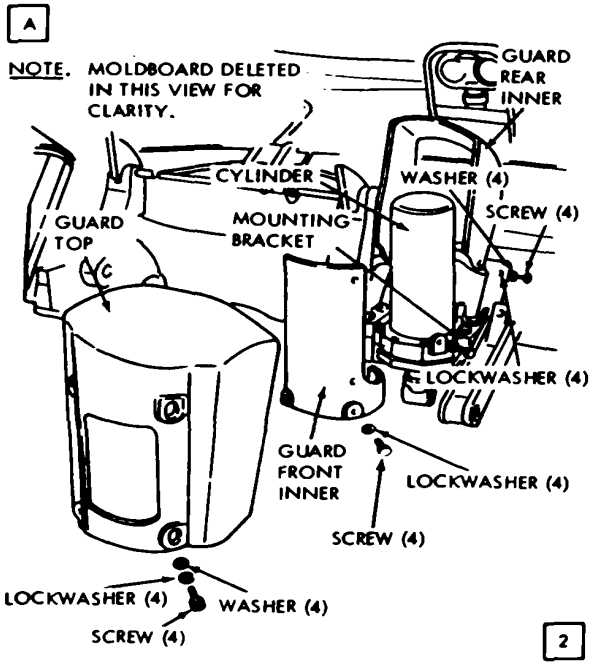

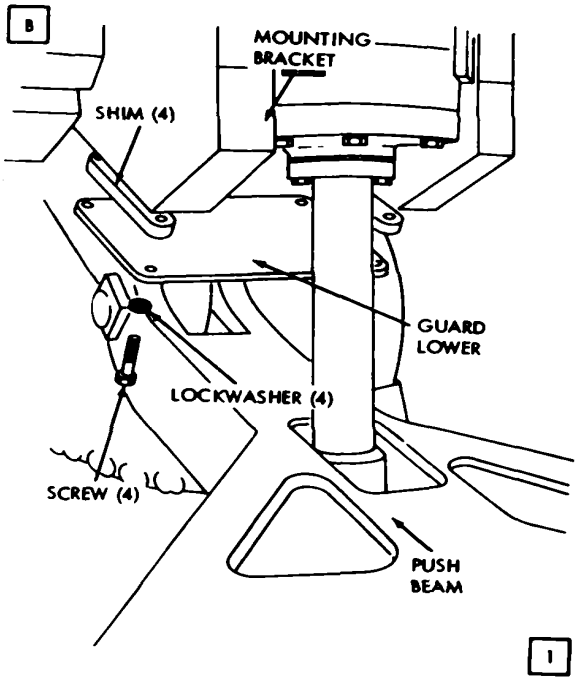

NOTE. SAME PROCEDURE APPLIES TO BOTH LEFT AND RIGHT SIDE.

REMOVE/INSTALL FOUR SCREWS, LOCKWASHERS, AND WASHERS FROM/TO TOP GUARD.

REMOVE/INSTALL FOUR SCREWS FROM/TO SIDE OF TOP GUARD.

REMOVE/INSTALL TOP GUARD.

REMOVE/INSTALL FOUR SCREWS, LOCKWASHERS, AND WASHERS FROM/TO FRONT INNER GUARD.

REMOVE/INSTALL FRONT INNER GUARD.

REMOVE/INSTALL FOUR SCREWS, LOCKWASHERS, AND WASHERS FROM/TO REAR INNER GUARD.

REMOVE/INSTALL REAR INNER GUARD.

REMOVE/INSTALL FOUR SCREWS, LOCKWASHERS, AND WASHERS FROM/TO LOWER GUARD.

REMOVE/INSTALL LOWER GUARD AND FOUR SHIMS.

AT 19663

Figure 3-23. Removal or installation of right and left cylinder armor guards.

PRELIMINARY PROCEDURE: LOWER MOLDBOARD TO GROUND. STOP VEHICLE ENGINE AND APPLY BRAKES.

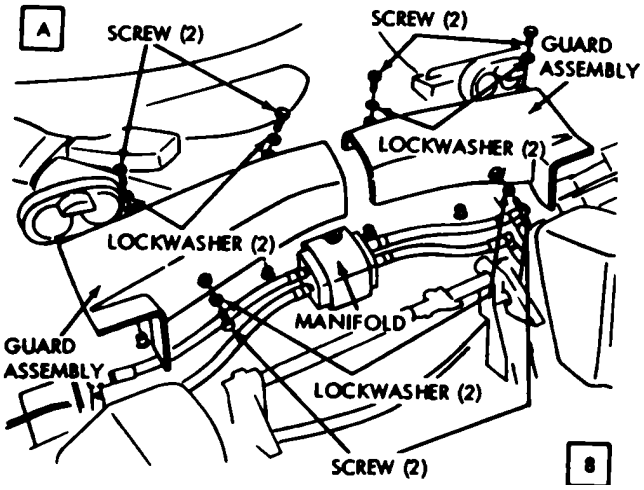

REMOVE/INSTALL SIX SCREWS AND LOCKWASHERS SECURING FRONT MANIFOLD-TO-LEFT HYDRAULIC CYLINDER HOSES GUARD ASSEMBLY.

REMOVE/INSTALL SIX SCREWS AND LOCKWASHERS SECURING FRONT MANIFOLD-TO-RIGHT HYDRAULIC CYLINDER HOSES GUARD ASSEMBLY.

REMOVE/INSTALL LEFT AND RIGHT HYDRAULIC HOSES GUARD ASSEMBLIES.

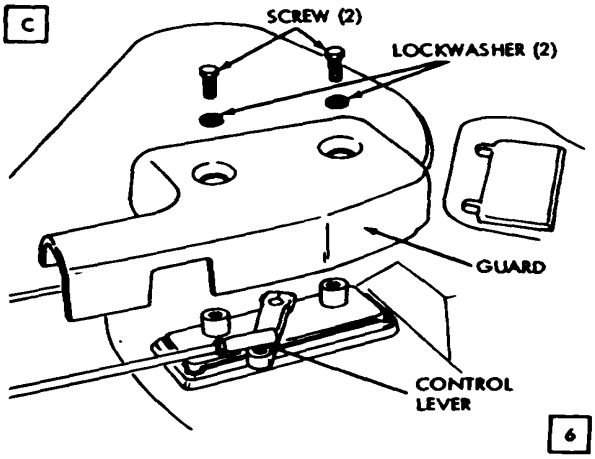

REMOVE/INSTALL TWO SCREWS AND LOCKWASHERS SECURING CONTROL LEVER GUARD.

REMOVE/INSTALL CONTROL LEVER GUARD.

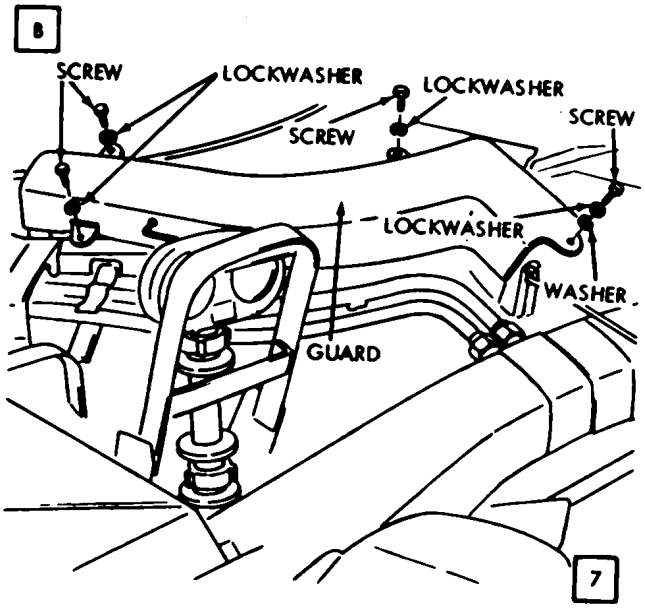

REMOVE/INSTALL THREE SCREWS AND LOCKWASHERS SECURING CONTROL VALVE-TO-FRONT MANIFOLD TUBE ASSEMBLY GUARD.

REMOVE/INSTALL TUBE ASSEMBLY GUARD.

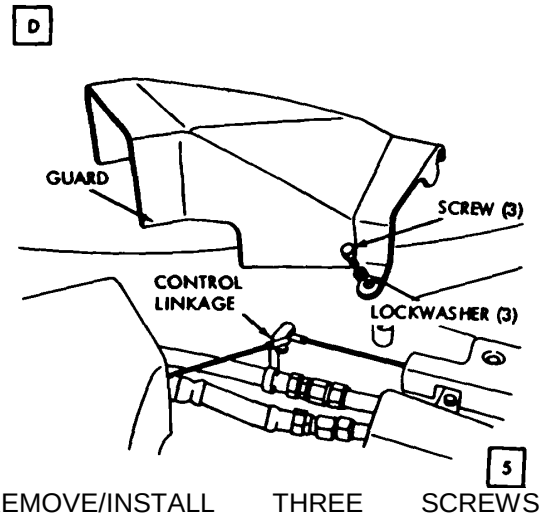

REMOVE/INSTALL THREE SCREWS AND LOCKWASHERS SECURING CONTROL LINKAGE GUARD.

REMOVE/INSTALL CONTROL LINKAGE GUARD.

AT 19664

Figure 3-24. Removal or installation of hydraulic system armor guards (sheet 1 of 2).

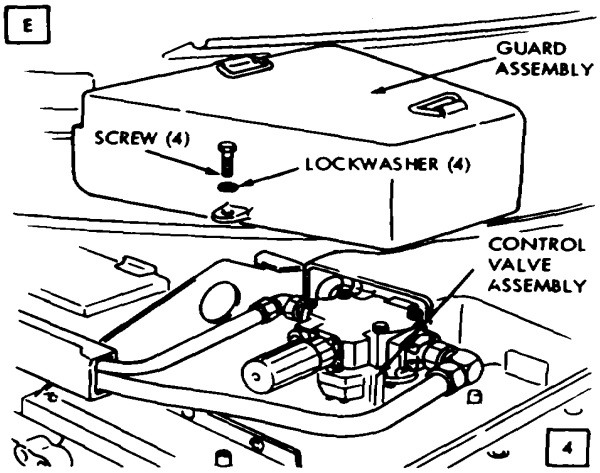

REMOVE/INSTALL FOUR SCREWS AND LOCKWASHERS SECURING CONTROL VALVE ASSEMBLY GUARD ASSEMBLY.

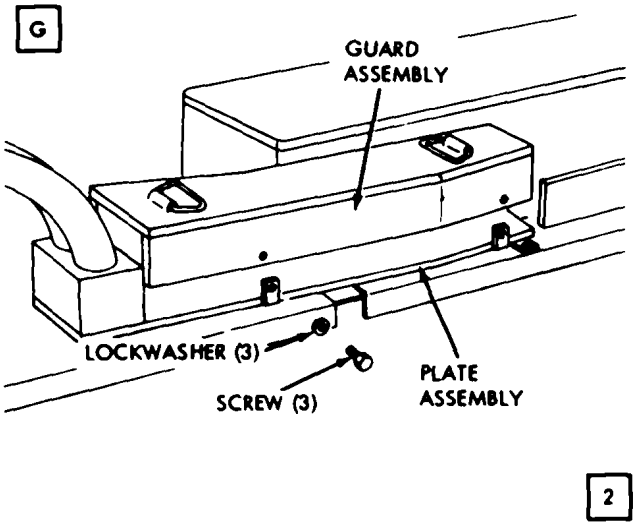

REMOVE/INSTALL THREE SCREWS AND LOCKWASHERS SECURING REAR GUARD ASSEMBLY TO PLATE ASSEMBLY.

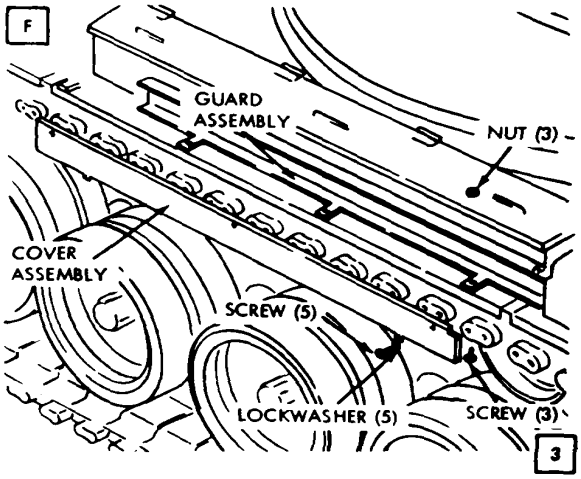

REMOVE/INSTALL FIVE SCREWS AND LOCKWASHERS SECURING HYDRAULIC TUBES FRONT COVER ASSEMBLY TO GUARD ASSEMBLY.

REMOVE/INSTALL COVER ASSEMBLY.

REMOVE/INSTALL FOUR SCREWS AND NUTS SECURING GUARD ASSEMBLY TO FENDER.

REMOVE/INSTALL GUARD ASSEMBLY.

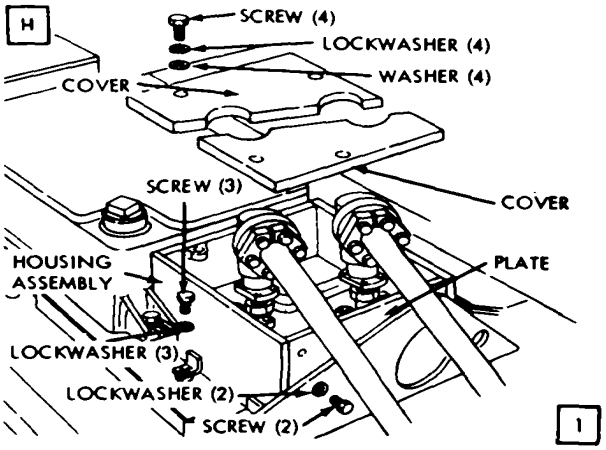

REMOVE/INSTALL THREE SCREWS AND LOCKWASHERS SECURING HOUSING ASSEMBLY TO FENDER.

REMOVE/INSTALL FOUR SCREWS, LOCKWASHERS AND WASHERS SECURING COVERS TO PLATE AND HOUSING ASSEMBLY.

REMOVE/INSTALL TWO SCREWS AND LOCKWASHERS SECURING PLATE TO HOUSING ASSEMBLY.

REMOVE/INSTALL PLATE AND HOUSING ASSEMBLY.

AT 19665

Figure 3-25. Removal or installation of hydraulic system armor guards (sheet 2 of 2).

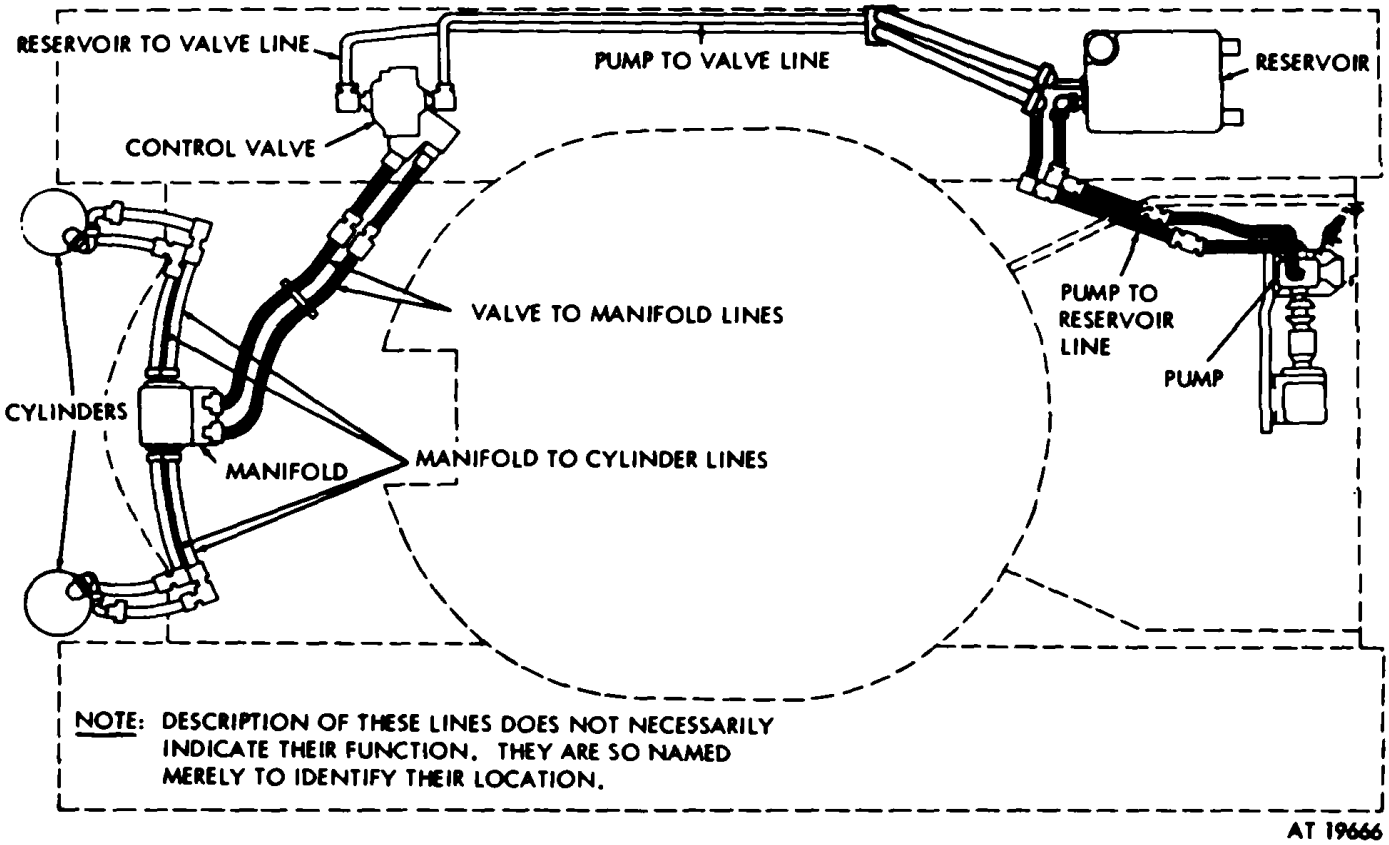

Figure 3-26. Schematic diagram of hydraulic lines.

PRELIMINARY PROCEDURE:
LOWER MOLDBOARD TO GROUND.
STOP VEHICLE ENGINE AND APPLY BRAKES.
OPEN GRILLE DOORS.
DRAIN HYDRAULIC SYSTEM (FIGS. 3-21 AND 3-22).
REMOVE RIGHT AND LEFT CYLINDER ARMOR GUARDS (FIG. 3-23).
REMOVE HYDRAULIC SYSTEM ARMOR GUARDS (FIGS. 3-24 AND 3-25).

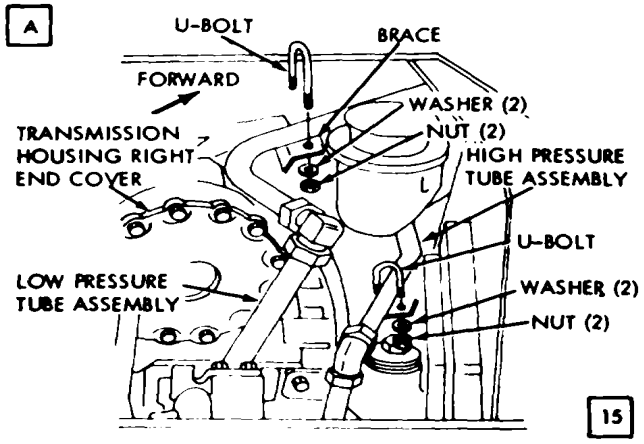

REMOVE/INSTALL TWO WASHERS AND NUTS ON EACH U-BOLT SECURING HIGH AND LOW PRESSURE TUBE ASSEMBLIES FROM/TO BRACES.

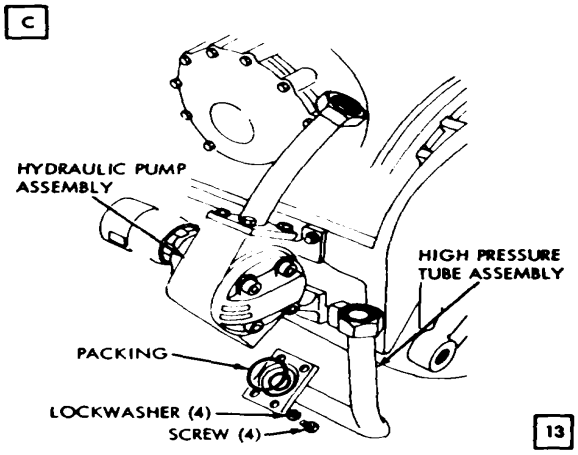

REMOVE/INSTALL FOUR SCREWS AND LOCKWASHERS SECURING HIGH PRESSURE TUBE ASSEMBLY FROM/TO HYDRAULIC PUMP ASSEMBLY.

DISCONNECT/CONNECT TUBE ASSEMBLY.

REMOVE/POSITION PACKING FROM/TO HYDRAULIC PUMP ASSEMBLY.

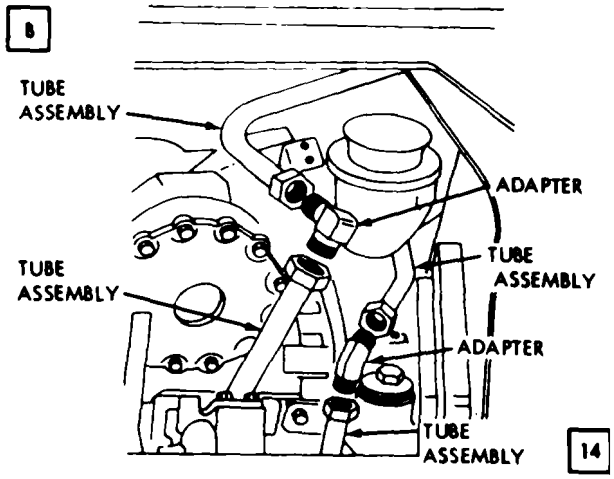

DISCONNECT/CONNECT TWO ADAPTERS FROM/TO
HIGH AND LOW PRESSURE TUBE ASSEMBLIES.

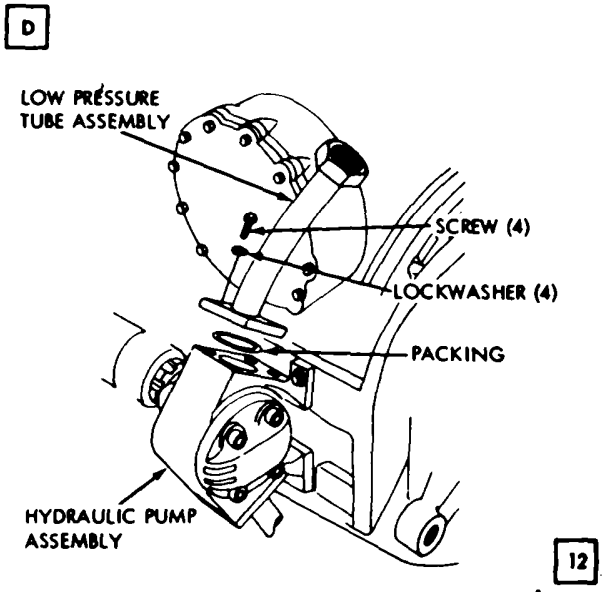

REMOVE/INSTALL FOUR SCREWS AND LOCKWASHERS SECURING LOW PRESSURE TUBE ASSEMBLY FROM/TO HYDRAULIC PUMP ASSEMBLY.

DISCONNECT/CONNECT TUBE ASSEMBLY.

REMOVE/POSITION PACKING FROM/TO HYDRAULIC PUMP ASSEMBLY.

AT 19667

Figure 3-27. Removal or installation of hydraulic hose, lines, tubes, fittings and valves (sheet 1 of 5).

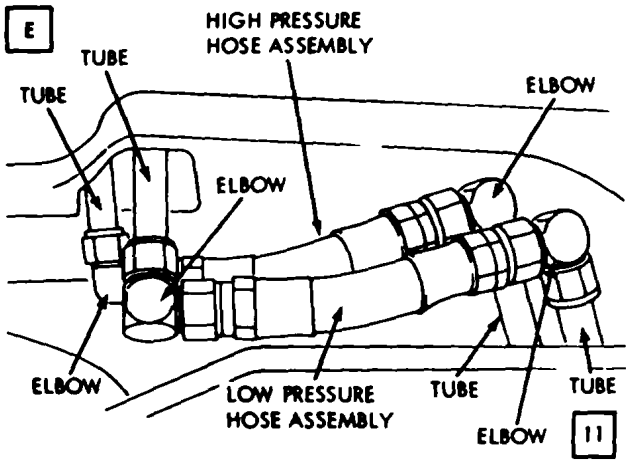

DISCONNECT/CONNECT HIGH AND LOW PRESSURE HOSE ASSEMBLIES FROM/TO ELBOWS.

DISCONNECT/CONNECT FOUR ELBOW FROM/TO TUBES.

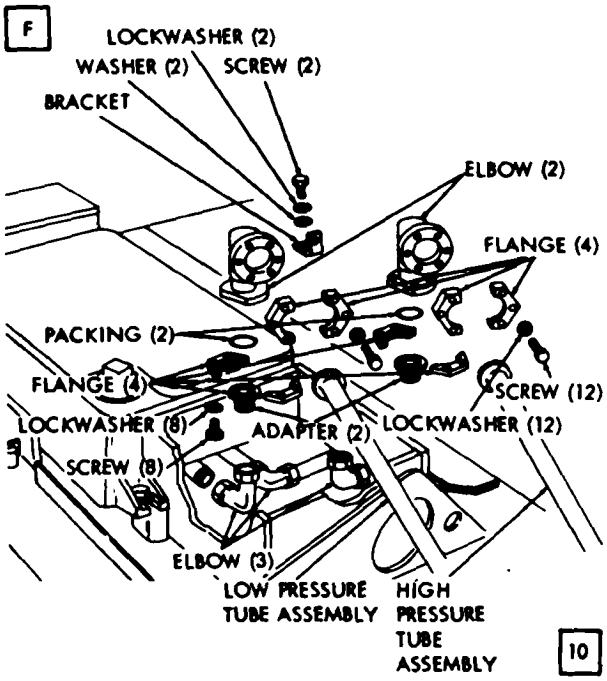

REMOVAL:

REMOVE SIX SCREWS AND LOCKWASHERS SECURING HIGH PRESSURE TUBE ASSEMBLY TO ELBOW.

MOVE TWO FLANGES FROM ELBOW

REMOVE SIX SCREWS AND LOCKWASHERS SECURING LOW PRESSURE TUBE ASSEMBLY TO ELBOW.

REMOVE TWO FLANGES FROM ELBOW.

REMOVE FOUR SCREWS AND LOCKWASHERS SECURING ADAPTER TO HIGH PRESSURE ELBOW.

REMOVE PACKING AND TWO FLANGES FROM HIGH PRESSURE ELBOW.

REMOVE FOUR SCREWS AND LOCKWASHERS SECURING ADAPTER TO LOW PRESSURE ELBOW.

REMOVE PACKING AND TWO FLANGES FROM LOW PRESSURE ELBOW.

REMOVE TWO SCREWS, LOCKWASHERS, AND WASHERS SECURING BRACKET.

DISCONNECT ELBOW FROM ADAPTER TO HIGH PRESSURE TUBE.

DISCONNECT ELBOW FROM ADAPTER TO RESERVOIR.

DISCONNECT ELBOW FROM RESERVOIR TO HYDRAULIC PUMP TUBE.

INSTALLATION:

CONNECT ELBOW BETWEEN HYDRAULIC PUMP TUBE AND RESERVOIR.

CONNECT ELBOW BETWEEN ADAPTER AND RESERVOIR.

CONNECT ELBOW BETWEEN HIGH PRESSURE TUBE AND ADAPTER.

INSTALL BRACKET AND SECURE WITH TWO SCREWS, LOCKWASHERS, AND WASHERS.

POSITION PACKING AND TWO FLANGES TO LOW PRESSURE ELBOW.

INSTALL ADAPTER TO LOW PRESSURE ELBOW AND SECURE WITH FOUR SCREWS AND LOCKWASHERS.

POSITION PACKING AND TWO FLANGES TO HIGH PRESSURE ELBOW.

INSTALL ADAPTER TO HIGH PRESSURE ELBOW AND SECURE WITH FOUR SCREWS AND LOCKWASHERS.

POSITION TWO FLANGES TO ELBOW.

INSTALL LOW PRESSURE TUBE ASSEMBLY TO ELBOW AND SECURE WITH SIX SCREWS AND LOCKWASHERS.

POSITION TWO FLANGES TO ELBOW.

INSTALL HIGH PRESSURE TUBE ASSEMBLY TO ELBOW AND SECURE WITH SIX SCREWS AND LOCKWASHERS.

AT 19668

Figure 3-28. Removal or installation of hydraulic hoses, lines, tubes, fitting and valves (sheet 2 of 5).

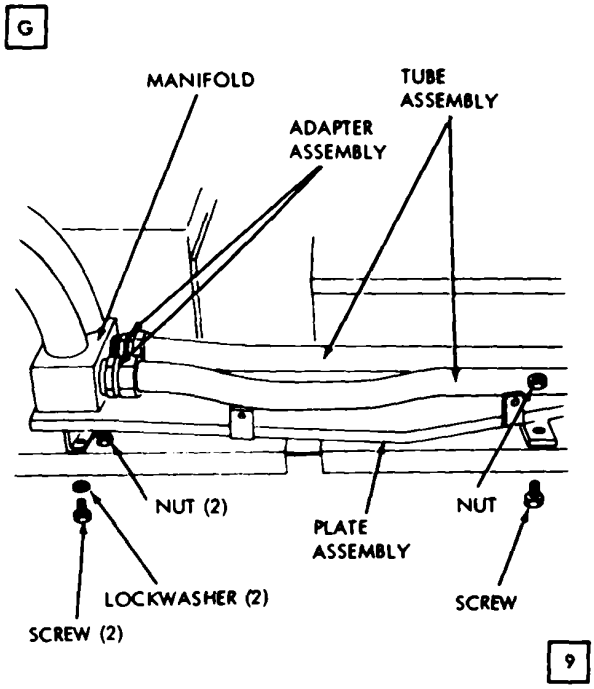

DISCONNECT/CONNECT TWO TUBE ASSEMBLIES FROM/TO ADAPTER ASSEMBLIES.

DISCONNECT/CONNECT TWO ADAPTER ASSEMBLIES FROM/TO MANIFOLD.

REMOVE/INSTALL TWO SCREWS AND LOCKWASHERS SECURING MANIFOLD TO PLATE ASSEMBLY.

REMOVE/POSITION MANIFOLD FROM/TO PLATE ASSEMBLY.

REMOVE/INSTALL THREE SCREWS AND NUTS SECURING PLATE ASSEMBLY TO FENDER.

REMOVE/POSITION PLATE ASSEMBLY FROM/TO FENDER.

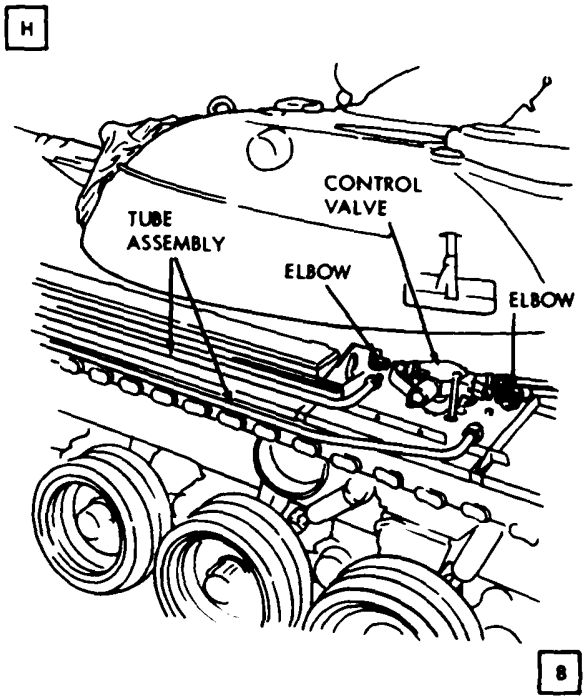

DISCONNECT/CONNECT LOW PRESSURE TUBE ASSEMBLY FROM/TO CONTROL VALVE.

REMOVE/INSTALL LOW PRESSURE TUBE ASSEMBLY.

REMOVE/INSTALL LOW PRESSURE PORT ELBOW FROM/TO CONTROL VALVE.

DISCONNECT/CONNECT HIGH PRESSURE TUBE ASSEMBLY FROM/TO CONTROL VALVE.

REMOVE/INSTALL HIGH PRESSURE TUBE ASSEMBLY.

AT 19669

Figure 3-29. Removal or installation of hydraulic hoses, lines, tubes, fittings and valves (sheet 3 of 5).

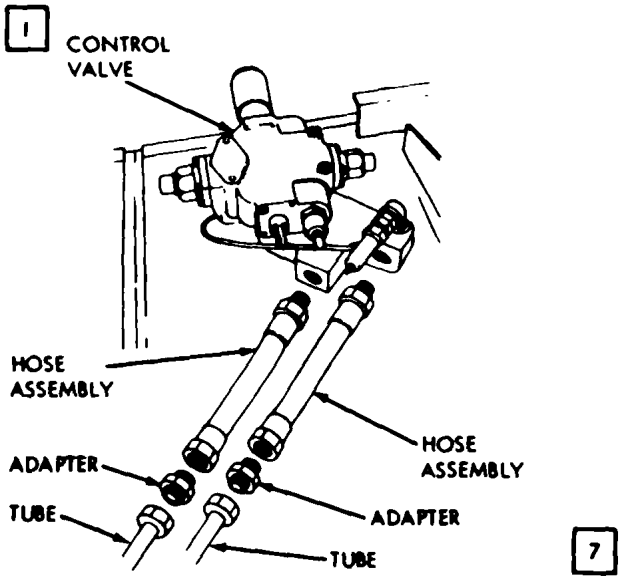

DISCONNECT/CONNECT TWO HOSE ASSEMBLIES FROM/TO CONTROL VALVE.

DISCONNECT/CONNECT TWO HOSE ASSEMBLIES FROM/TO ADAPTERS ON TUBE ASSEMBLIES.

DISCONNECT/CONNECT TWO ADAPTERS FROM/TO TUBE ASSEMBLIES.

REMOVE/INSTALL TWO ADAPTERS.

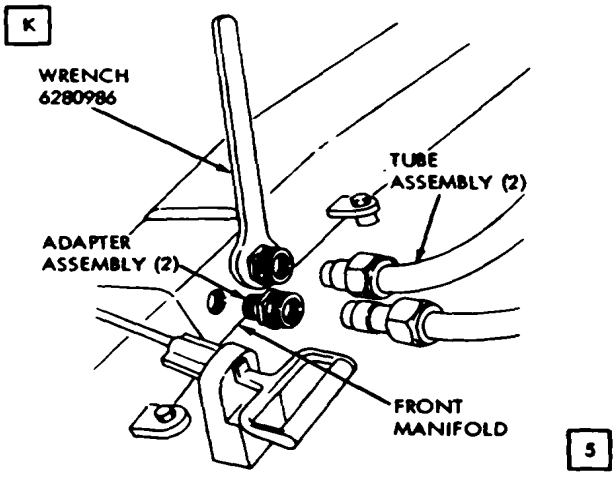

DISCONNECT/CONNECT TWO TUBE ASSEMBLIES FROM/TO ADAPTER ASSEMBLIES ON FRONT MANIFOLD.

REMOVE/INSTALL TWO TUBE ASSEMBLIES.

DISCONNECT/CONNECT TWO ADAPTER ASSEMBLIES FROM/TO FRONT MANIFOLD.

REMOVE/INSTALL ADAPTER ASSEMBLIES.

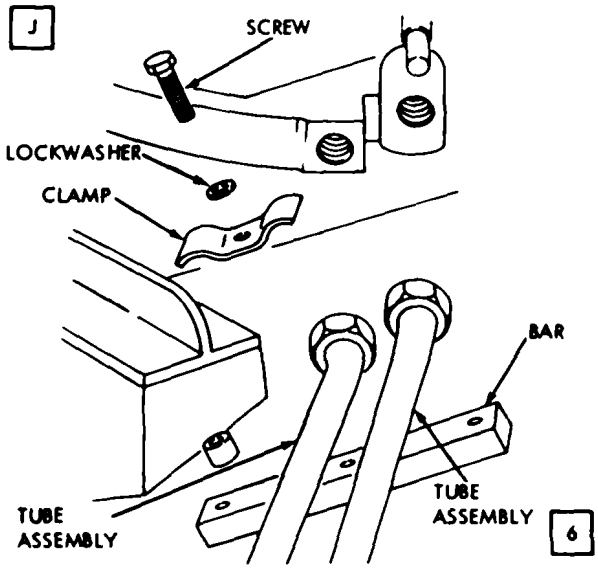

REMOVE/INSTALL SCREW AND LOCKWASHER SECURING TUBE ASSEMBLY CLAMP FROM/TO BAR.

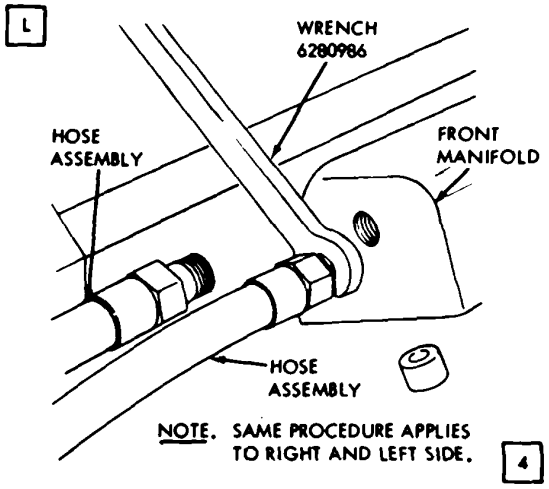

DISCONNECT/CONNECT TWO HOSE ASSEMBLIES FROM/TO FRONT MANIFOLD.

AT 19670

Figure 3-30. Removal or installation of hydraulic hose, lines, tubes, fittings and valves (sheet 4 of 5).

M

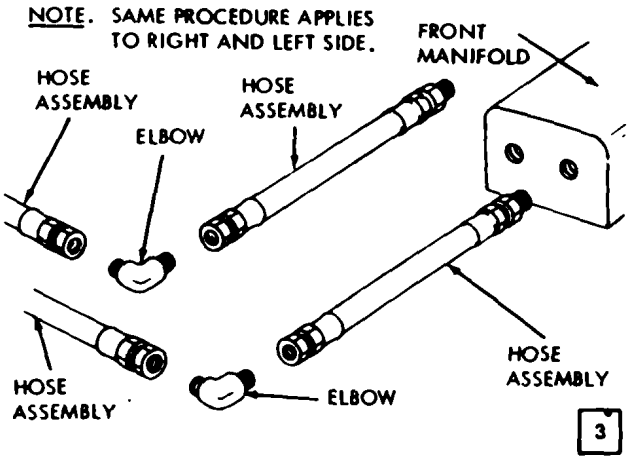

DISCONNECT/CONNECT TWO HOSE ASSEMBLIES FROM/TO ELBOWS.

REMOVE/INSTALL TWO HOSE ASSEMBLIES.

DISCONNECT/CONNECT TWO ELBOWS FROM/TO HOSE ASSEMBLIES.

O

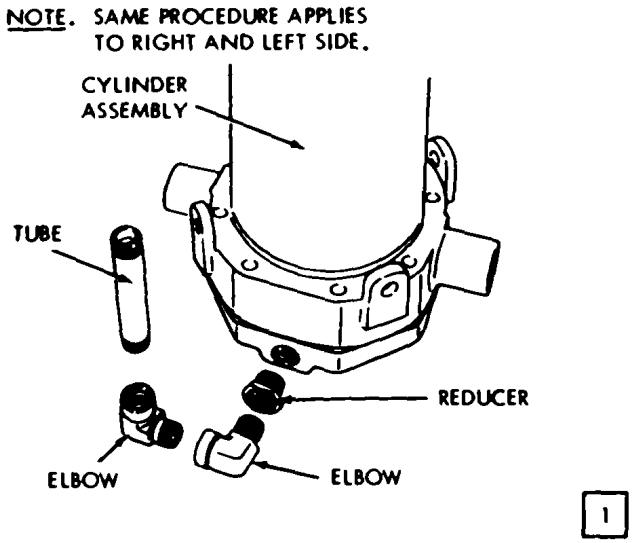

DISCONNECT/CONNECT TUBE FROM/TO ELBOW.

REMOVE/INSTALL TUBE.

DISCONNECT/CONNECT TWO ELBOWS.

DISCONNECT/CONNECT ELBOW FROM/TO REDUCER.

DISCONNECT/CONNECT REDUCER FROM/TO BOTTOM PORT ON CYLINDER ASSEMBLY.

N

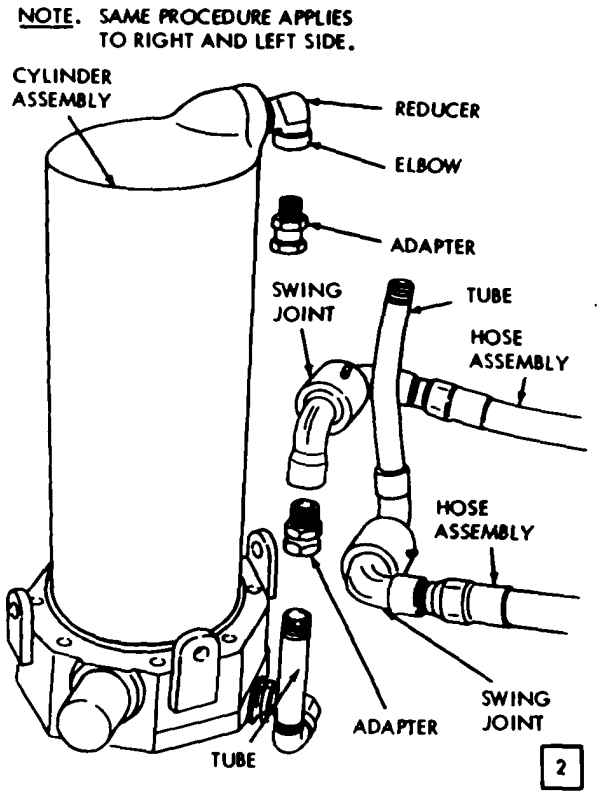

DISCONNECT/CONNECT TWO HOSE ASSEMBLIES FROM/TO SWING JOINTS.

DISCONNECT/CONNECT BOTTOM PORT SWING JOINT FROM/TO ADAPTER.

REMOVE/INSTALL BOTTOM PORT SWING JOINT.

DISCONNECT/CONNECT BOTTOM PORT ADAPTER FROM/TO TUBE.

DISCONNECT/CONNECT TOP PORT SWING JOINT FROM/TO TUBE.

REMOVE/INSTALL TOP PORT SWING JOINT.

DISCONNECT/CONNECT TUBE FROM/TO TOP PORT ADAPTER.

REMOVE/INSTALL TUBE.

DISCONNECT/CONNECT TOP PORT ADAPTER AND REDUCER FROM/TO CYLINDER ASSEMBLY.

AT 19671

Figure 3-31. Removal or installation of hydraulic hoses, lines, tubes, fittings and valves (sheet 5 of 5).

b. Cover open hydraulic lines and ports to prevent entrance of foreign matter.

3-78. Installation. To install Line or tubes, proceed as follows:

a. Assure that contractor is tightened in correct position in the component to which the connection will be made. Where required, install new packing.

b. Position line assembly between connectors and install line clips and clamps, if necessary, to hold in place. Remove plugs from component connectors, and wipe off connectors with a clean, lint-free cloth that has been dampened with drycleaning solvent or mineral-spirits paint thinner.

c. Lubricate thread and sleeve with hydraulic fluid. Aline the line assembly tube ends in the connector and start the nuts on the connectors by hand. Tighten each nut until resistance is felt. Hold component connector firmly with wrench and tighten nut until seated.

d. Note position of turning wrench. Tighten nut an additional one-sixth to one-third turn.

e. Install line clips and clamps.

f. Fill reservoir (see lubrication order LO 92590-213-12). Check for leaks, and purge system f air (paragraph 3-69).

3-79. Replacement of Hydraulic Cylinder and Ram Assembly.

3-80. Removal and Installation. Refer to figure 3-32 for instructions on removal and installation of the left and right hydraulic cylinder and ram assemblies. Follow the alphabetical sequence of views for removal and the numerical sequence of views for installation. Following replacement and connection of hydraulic hoses, check for leaks and purge system of air (paragraph 3-69).

PRELIMINARY PROCEDURE:

LOWER MOLDBOARD TO GROUND.
STOP VEHICLE ENGINE AND APPLY BRAKES.
DRAIN HYDRAULIC SYSTEM (FIGS. 3-21 AND 3-22).

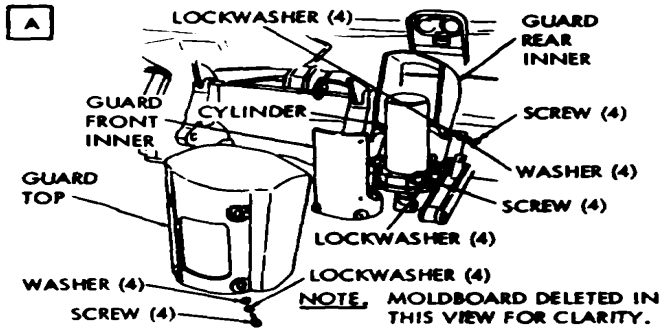

NOTE. SAME PROCEDURE APPLIES TO BOTH LEFT AND RIGHT CYLINDER ASSEMBLIES.

REMOVE/INSTALL FOUR SCREWS LOCKWASHERS, AND WASHERS FROM/TO TOP GUARD.

REMOVE/INSTALL FOUR SCREWS FROM/TO SIDE OF TOP GUARD.

REMOVE/INSTALL TOP GUARD.

REMOVE/INSTALL FOUR SCREWS. LOCKWASHERS. AND WASHERS FROM/TO FRONT INNER GUARD.

REMOVE/INSTALL FRONT INNER GUARD.

REMOVE/INSTALL FOUR SCREWS, LOCKWASHERS. AND WASHERS FROM/TO REAR INNER GUARD.

REMOVE/INSTALL REAR INNER GUARD.

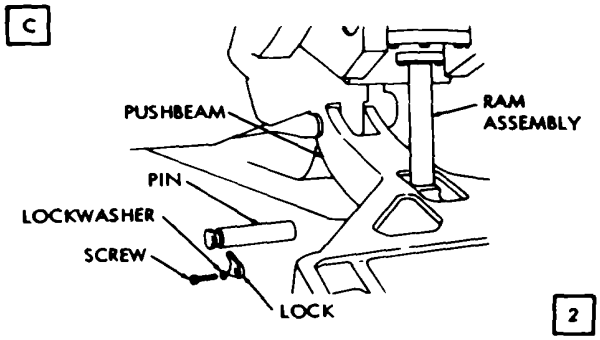

REMOVE/INSTALL SCREW AND LOCKWASHER SECURING LOCK FROM/TO PIN.

REMOVE/INSTALL LOCK.

REMOVE/INSTALL PIN SECURING RAM ASSEMBLY FROM/TO PUSHBEAM.

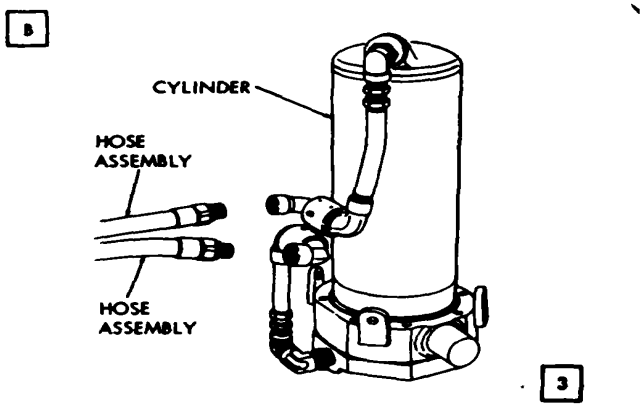

DISCONNECT/CONNECT TWO HOSE ASSEMBLIES FROM/TO SWING JOINTS.

DISCONNECT/CONNECT CYLINDER ASSEMBLY TUBES AND HYDRAULIC FITTINGS (FIG. 3-31).

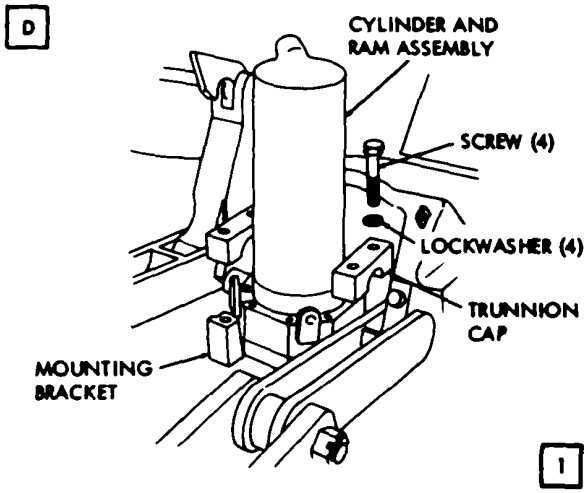

REMOVE/INSTALL FOUR SCREWS AND LOCKWASHERS FROM/TO TRUNNION CAPS.

REMOVE/INSTALL TWO TRUNNION CAPS FROM/TO MOUNTING BRACKET.

REMOVE/INSTALL CYLINDER AND RAM ASSEMBLY FROM/TO MOUNTING BRACKET.

AT 1972

Figure 3-32. Removal or installation of hydraulic cylinder and ram assembly.

3-81. Replacement of Hydraulic Reservoir Assembly.

3-82. Removal and Installation. Refer to figure 3-33 for instructions on removal and installation of reservoir assembly. Follow the alphabetical sequence of views for removal and the numerical sequence of views for installation. Following replacement and connection of hydraulic hoses, check for leaks and purge system of air (paragraph 3-69).

3-83. Servicing Hydraulic Reservoir Relief Fitting.

3-84. The relief fitting, set at 5 psi, is located in the center of the oil reservoir cover (figure 3-35). It should be kept free of debris. Inspect periodically by pulling the fitting stem from its seat making sure it is free. Replace fitting when found defective.

3-85. Servicing of Hydraulic Screen Assembly.

3-86. **Removal and Installation**. Refer to figure 3-34 for instructions on removal or installation of screen assembly. Refer to figure 3-35 for instructions on removal or installation of assembly components.

3-87. Servicing Hydraulic Filter Elements.

3-88. Refer to lubrication order LO 9-2590-21312 for servicing of filter element

3-89. Directional Control Valve.

3-90. Removal and Installation. Refer to figure 3-36 for instructions on removal and installation of the direction control valve. Refer to figure 3-37 for removal or installation of assembly components.

PRELIMINARY PROCEDURE:
LOWER MOLDBOARD TO GROUND.
STOP VEHICLE ENGINE AND APPLY BRAKES.
DRAIN HYDRAULIC SYSTEM (FIGS. 3-21 AND 3-22).
REMOVE HYDRAULIC SYSTEM ARMOR GUARDS (FIG. 3-25, VIEW H).
DISCONNECT ELBOWS FROM RESERVOIR ASSEMBLY (FIG. 3-28, VIEW F).

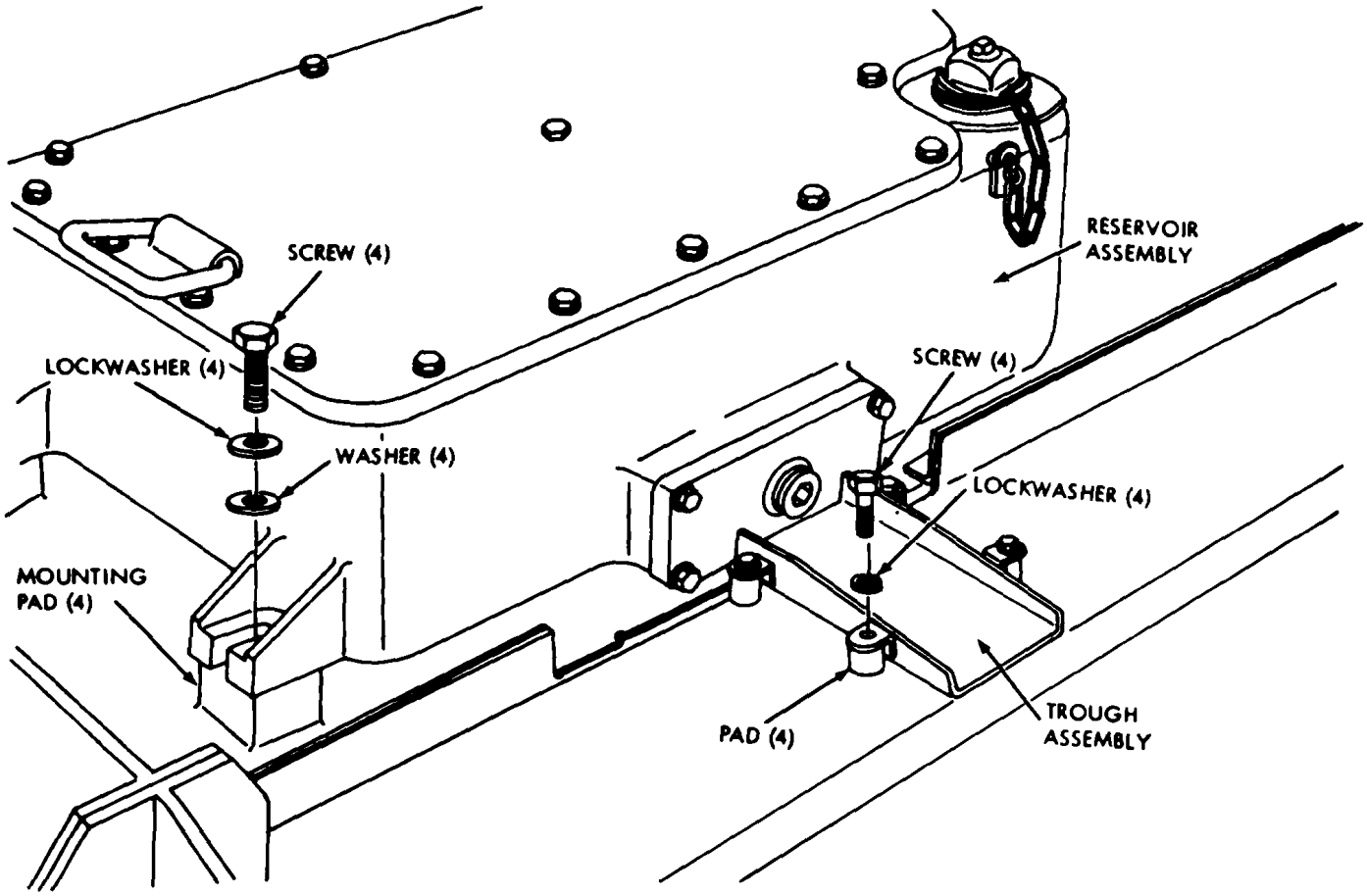

REMOVE/INSTALL FOUR SCREWS AND LOCKWASHERS SECURING TROUGH ASSEMBLY FROM/TO MOUNTING PADS ON FENDER.

REMOVE/POSITION TROUGH ASSEMBLY FROM/TO MOUNTING PADS.

REMOVE/INSTALL FOUR SCREWS, LOCKWASHERS, AND WASHERS SECURING RESERVOIR ASSEMBLY FROM/TO MOUNTING PADS ON FENDER.

REMOVE/POSITION RESERVOIR ASSEMBLY.

AT 19673

Figure 3-33. Removal or installation of hydraulic assembly.

PRELIMINARY PROCEDURE:
LOWER MOLDBOARD TO GROUND.
STOP VEHICLE ENGINE AND APPLY BRAKES.
DRAIN HYDRAULIC SYSTEM (FIGS. 3-21 AND 3-22).
REMOVE HYDRAULIC RESERVOIR TROUGH ASSEMBLY (FIG. 3-33).

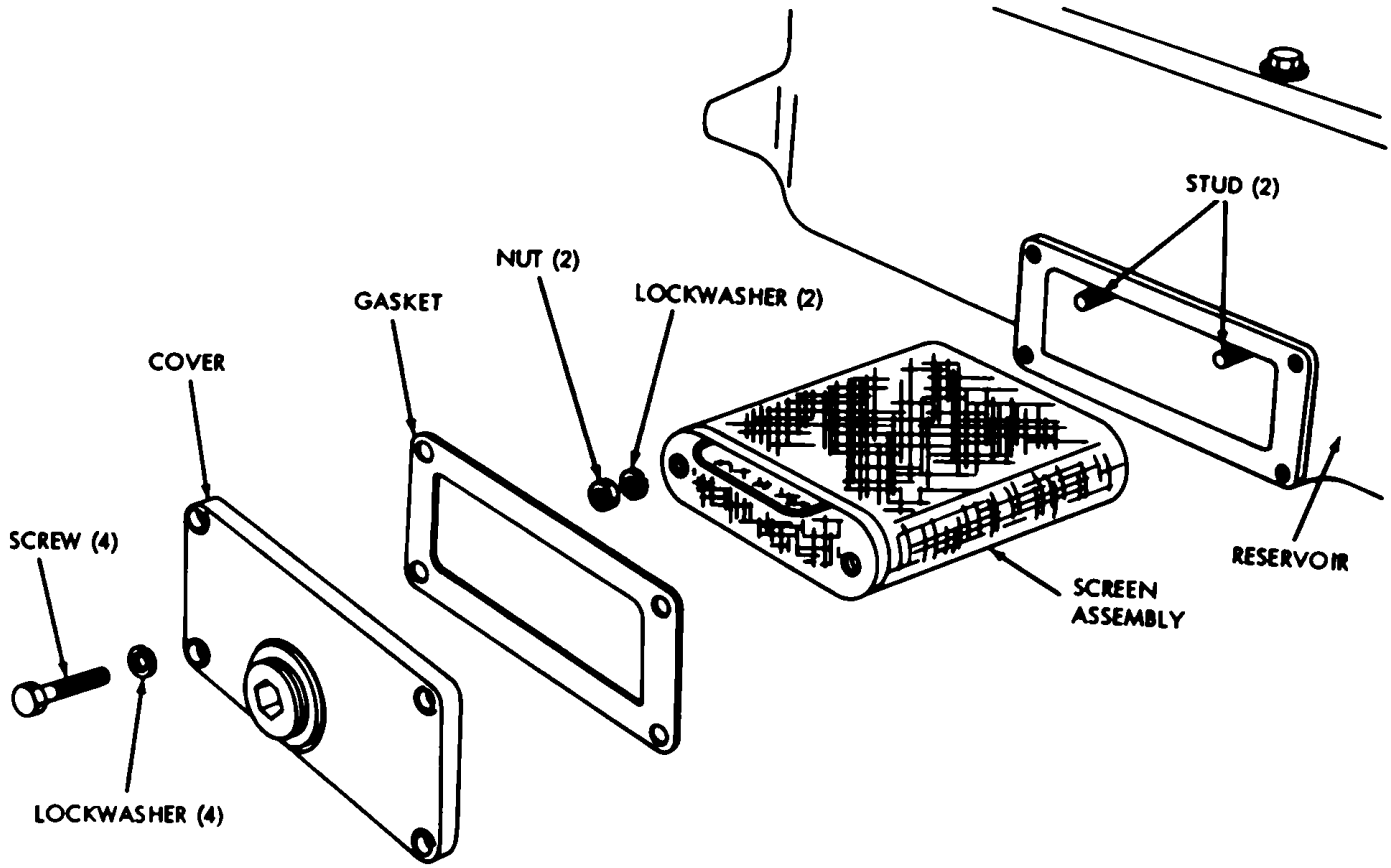

REMOVAL:

REMOVE FOUR SCREWS AND LOCKWASHERS SECURING COVER TO RESERVOIR.

REMOVE AND DISCARD GASKET.

REMOVE TWO NUTS AND LOCKWASHERS SECURING SCREEN ASSEMBLY TO STUDS IN RESERVOIR.

REMOVE SCREEN ASSEMBLY FROM STUDS.

WASH SCREEN ASSEMBLY THOROUGHLY IN DRY-CLEANING SOLVENT OR MINERAL SPIRITS PAINT THINNER. DRY THE PARTS WITH COMPRESSED AIR.

INSTALLATION:

INSTALL SCREEN ASSEMBLY TO STUDS IN RESERVOIR.

INSTALL TWO WASHERS AND NUTS AND SECURE SCREEN ASSEMBLY TO STUDS.

POSITION GASKET TO RESERVOIR.

INSTALL COVER TO RESERVOIR AND SECURE WITH FOUR SCREWS AND LOCKWASHERS.

AT 19674

Figure 3-34. Removal, servicing or installation of reservoir screen assembly.

PRELIMINARY PROCEDURE:
REMOVE HYDRAULIC RESERVOIR ASSEMBLY (FIG. 3-33).

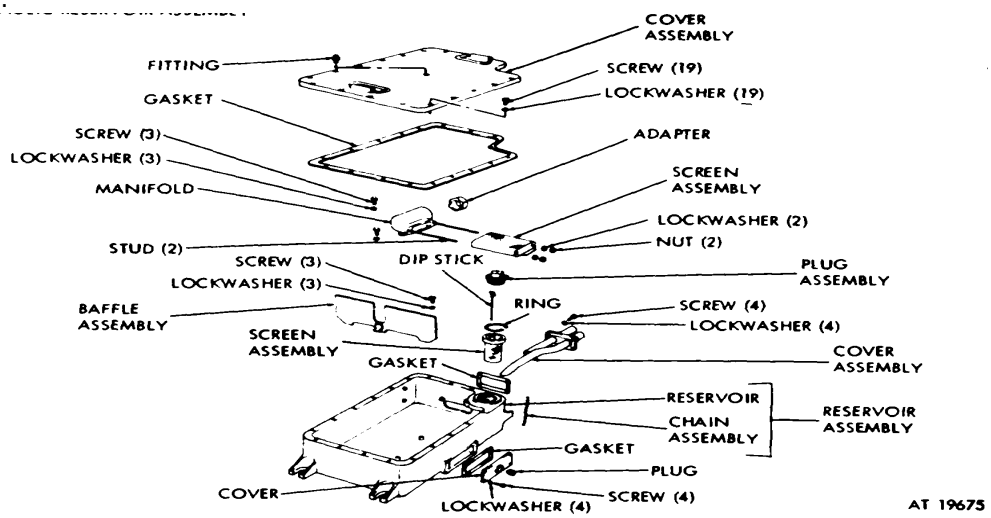

DISASSEMBLY:

REMOVE FITTING FROM COVER.

REMOVE NINETEEN SCREWS AND LOCKWASHERS SECURING COVER AND GASKET TO RESERVOIR AND REMOVE COVER AND GASKET.

REMOVE COVER AND SCREEN ASSEMBLY (FIG. 3-34) AND REMOVE PLUG FROM COVER.

REMOVE FOUR SCREWS AND LOCKWASHERS SECURING TUBE COVER ASSEMBLY AND GASKET.

DISCONNECT ADAPTER SECURING TUBE COVER ASSEMBLY TO MANIFOLD AND REMOVE TUBE COVER ASSEMBLY, ADAPTER, AND GASKET.

REMOVE THREE SCREWS AND LOCKWASHERS SECURING MANIFOLD TO BOTTOM OF RESERVOIR AND REMOVE MANIFOLD.

REMOVE TWO STUDS FROM MANIFOLD.

REMOVE THREE SCREWS AND LOCKWASHERS SECURING BAFFLE ASSEMBLY TO BOTTOM OF RESERVOIR AND REMOVE BAFFLE ASSEMBLY.

OPEN END HOOK OF CHAIN AND REMOVE FILLER PLUG.

REMOVE DIPSTICK.

REMOVE RING SECURING SCREEN ASSEMBLY TO RESERVOIR AND REMOVE SCREEN ASSEMBLY.

ASSEMBLY:

INSTALL DIPSTICK SCREEN ASSEMBLY AND SECURE TO RESERVOIR WITH RING.

INSTALL DIPSTICK AND FILLER PLUG.

CONNECT END HOOK OF CHAIN TO FILLER PLUG AND CLOSE LINK.

INSTALL BAFFLE ASSEMBLY TO BOTTOM OF RESERVOIR AND SECURE WITH THREE SCREWS AND LOCKWASHERS.

INSTALL TWO STUDS TO MANIFOLD.

INSTALL MANIFOLD TO BOTTOM OF RESERVOIR AND SECURE WITH THREE SCREWS AND LOCKWASHERS.

INSTALL ADAPTER TO TUBE COVER ASSEMBLY.

INSTALL TUBE COVER ASSEMBLY, GASKET, AND ADAPTER TO RESERVOIR AND MANIFOLD, TIGHTEN ADAPTER AND SECURE COVER ASSEMBLY WITH FOUR SCREWS AND LOCKWASHERS.

INSTALL PLUG TO SCREEN ASSEMBLY COVER.

INSTALL SCREEN ASSEMBLY AND COVER (FIG. 3-34).

INSTALL GASKET AND COVER TO RESERVOIR AND SECURE WITH NINETEEN SCREWS AND LOCKWASHERS.

INSTALL FITTING TO COVER.

Figure 3-35. Hydraulic reservoir assembly -exploded view.

PRELIMINARY PROCEDURE:
LOWER MOLDBOARD TO GROUND.
STOP VEHICLE ENGINE AND APPLY BRAKES.
DRAIN HYDRAULIC SYSTEM (FIGS. 3-31 AND 3-32).
REMOVE HYDRAULIC SYSTEM ARMOR GUARDS (FIG. 3-25, VIEW E).

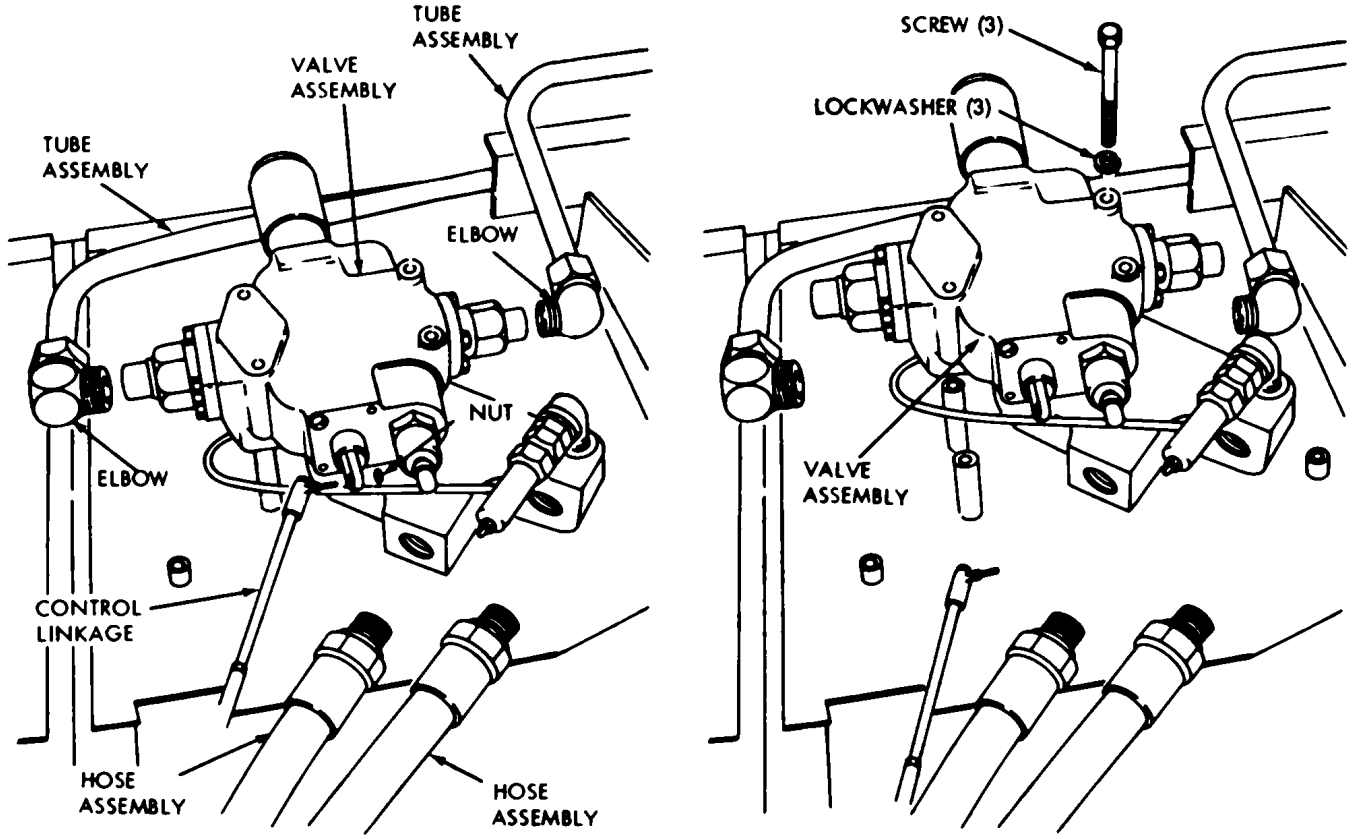

DISCONNECT/CONNECT LOW PRESSURE ELBOW AND TUBE ASSEMBLY FROM/TO CONTROL VALVE.

DISCONNECT/CONNECT HIGH PRESSURE ELBOW AND TUBE ASSEMBLY FROM/TO CONTROL VALVE.

REMOVE/INSTALL NUT SECURING CONTROL LINKAGE TO CONTROL VALVE.

DISCONNECT/CONNECT CONTROL LINKAGE.

DISCONNECT/CONNECT TWO HOSE ASSEMBLIES FROM/TO CONTROL VALVE.

REMOVE/INSTALL THREE SCREWS AND LOCKWASHERS SECURING CONTROL VALVE TO MOUNTING PADS.

REMOVE/POSITION CONTROL VALVE FROM/TO MOUNTING PADS.

AT 19676

Figure 3-36. Removal or installation of directional control valve.

PRELIMINARY PROCEDURE:
REMOVE DIRECTIONAL CONTROL VALVE (FIG. 3-36)

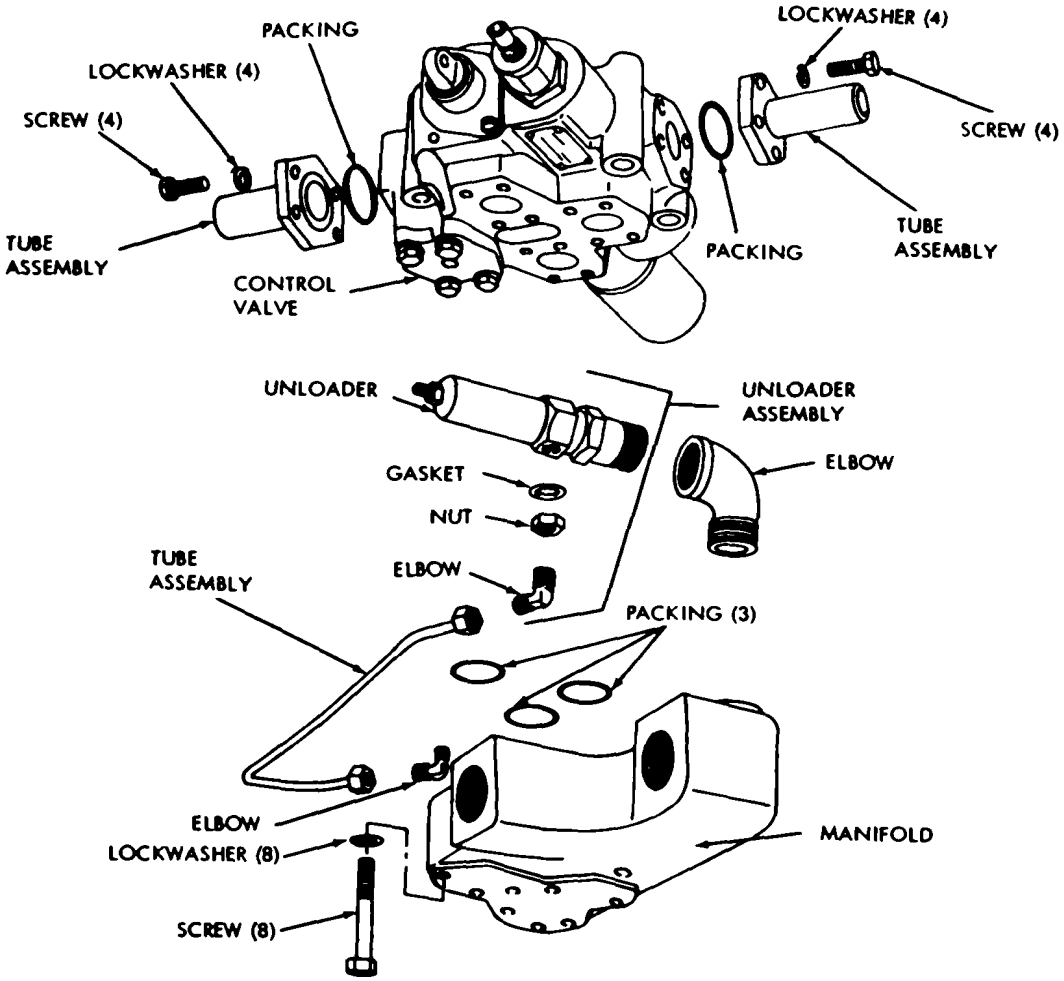

DISASSEMBLY:

REMOVE EIGHT SCREWS AND LOCKWASHERS SECURING TWO TUBE ASSEMBLIES TO CONTROL VALVE.

REMOVE TWO TUBE ASSEMBLIES AND PACKING.

REMOVE TUBE ASSEMBLY AND ELBOW FROM CONTROL VALVE.

UNLOADER AND REMOVE ELBOW, NUT AND GASKET FROM UNLOADER.

REMOVE ELBOW AND UNLOADER FROM MANIFOLD AND DISCONNECT UNLOADER FROM ELBOW.

REMOVE EIGHT SCREWS AND LOCKWASHERS AND REMOVE CONTROL VALVE FROM MANIFOLD.

REMOVE THREE PACKINGS FROM MANIFOLD

ASSEMBLY:

INSTALL THREE PACKINGS BETWEEN CONTROL VALVE AND MANIFOLD.

INSTALL CONTROL VALVE TO MANIFOLD AND SECURE WITH EIGHT SCREWS AND LOCKWASHERS.

ASSEMBLE UNLOADER TO ELBOW AND INSTALL ELBOW TO MANIFOLD.

INSTALL GASKET, NUT AND ELBOW TO UNLOADER.

INSTALL ELBOW TO CONTROL VALVE.

INSTALL TUBE ASSEMBLY BETWEEN CONTROL VALVE ELBOW AND UNLOADER ELBOW.

INSTALL TWO PACKINGS AND TWO TUBE ASSEMBLIES TO CONTROL VALVE AND SECURE WITH EIGHT SCREWS AND LOCKWASHERS.

AT 19677

Figure 3-37. Directional control valve assembly exploded view.

Section VII. FRONT MOUNTING BRACKETS AND MOLDBOARD

3-91. General.

3-92. This section covers the description and maintenance of the front mounting bracket and moldboard. Organizational maintenance of the components consists of: replacement of moldboard assembly, tilt arms and push beams; replacement of emergency lifting cables; and replacement of carrying hooks and shafts.

3-93. Description.

3-94. The front mounting brackets and moldboard consist essentially of heavy-duty moldboard and cutting edge supported by a parallelogram linkage attached by retaining pins to mounting brackets located on the front lower glacis of the vehicle hull. The parallelogram linkage is composed of two push beams (left and right) and four tilt arms (left and right outboard and left and right inboard). Up-down motion of the moldboard is accomplished by two hydraulically operated double-acting cylinder and ram assemblies. The ram ends are connected by pivot pins to the push beams.

3-95. Replacement of Moldboard Assembly, Tilt Arms and Push Beams.

3-96. Removal. To remove the moldboard assembly (including tilt arm and push beams) from the vehicle, proceed as follows:

a. Place vehicle on level terrain and lock parking brake.

b. Attach hoisting device to lifting eyes stop moldboard " shown in figure 3-38, view A.

c. Raise moldboard to stowed position and lock.

Note. **Raise moldboard with hydraulic system if operative. If system is not operative, attach emergency lift cables and raise moldboard as prescribed in paragraph 2-19. Other alternate methods may be a hoist or hydraulic jacks positioned beneath push beams at ram arm pivots**

d. Remove outer tilt arm caps shown in figure 3-38, view B.

e. Disconnect inner tilt arms from hull as shown in figure 3-39.

f. Raise bottom edge of moldboard with rams, or jacks, while maintaining slack in hoist chains and tilt moldboard face toward ground. When maximum tilt is obtained, lower rams until bottom edge of moldboard rests on ground.

Remove slack in hoist chains.

g. Remove ram arm pivot pin u shown in figure 3-40, view D.

h. Disconnect push beams from hull brackets as shown in figure 3-40, view E.

i. Raise cylinder rams and secure them in raised position with straps.

j. Refer to figure 3-41, view F, for removal of tilt arms and push beams from moldboard assembly.

3-97. Installation. To install moldboard assembly to the vehicle, proceed as follows:

a. Install tilt arms and push beams to moldboard (refer to figure 3-41, view 1).

b. Park vehicle on level terrain.

c. Position moldboard assembly in front of vehicle as described in figure 3-40, view 2. Attach hoisting device (see note, paragraph 3-96, step b) to lifting eyes located at top edge of moldboard.

d. Activate hoist and raise top edge of moldboard and connect push beams to hull brackets as shown in figure 3-40, view 2.

e. Activate hoist and raise top edge of moldboard and connect push beams to hull brackets as shown in figure 3-40, view 3.

PRELIMINARY PROCEDURES:

THE PROCEDURES OUTLINED IN PARAGRAPHS 3-96 AND 3-97 ARE TO BE USED IN CONJUNCTION WITH THE PROCEDURES CONTAINED ON THIS FIGURE.

A

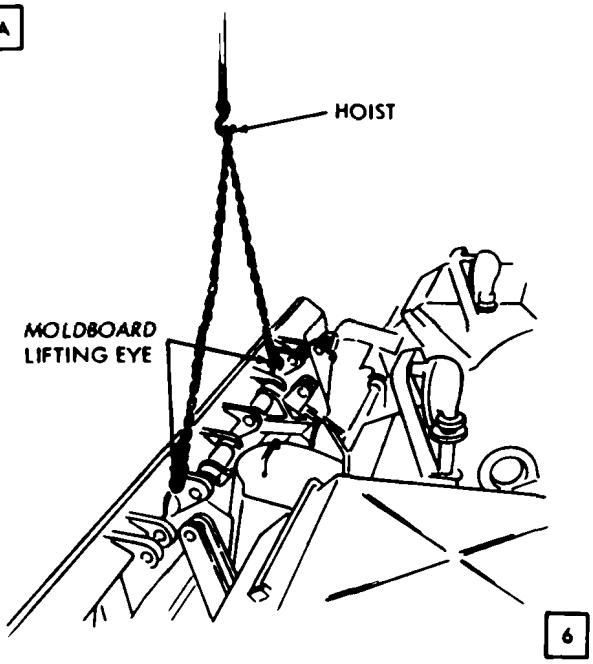

ATTACH/REMOVE HOISTING CHAINS TO/FROM LIFTING EYES ON TOP EDGE OF MOLDBOARD.

RAISE MOLDBOARD TO STOWED POSITION AND LOCK.

B

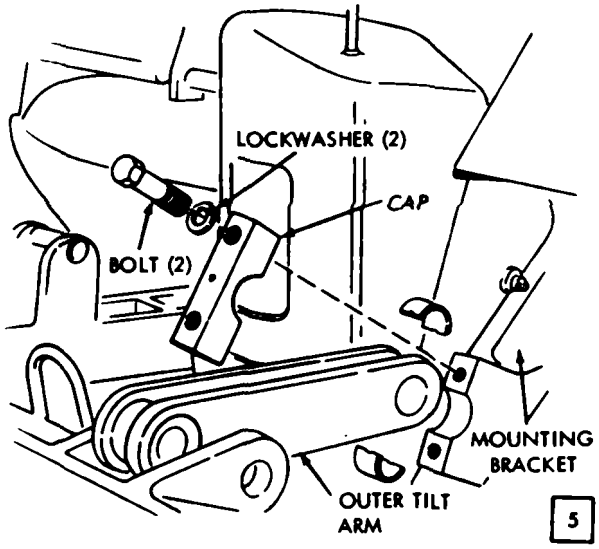

REMOVE/INSTALL THE LOWER TWO BOLTS AND LOCK-WASHERS SECURING LEFT AND RIGHT OUTER TILT ARM RETAINING CAPS TO MOUNTING BRACKET.

LOWER/RAISE MOLDBOARD TO FLOAT/STOWED POSITION.

REMOVE/INSTALL THE UPPER TWO BOLTS AND LOCK-WASHERS SECURING LEFT AND RIGHT OUTER TILT ARM RETAINING CAPS TO MOUNTING BRACKET.

REMOVE/POSITION LEFT AND RIGHT OUTER TILT ARM RETAINING CAPS.

REMOVE/ POSITION OUTER TILT ARMS FROM/IN HULLMOUNTING BRACKETS.

Figure 3-38. Removal or installation of moldboard assembly (sheet 1 of 4).

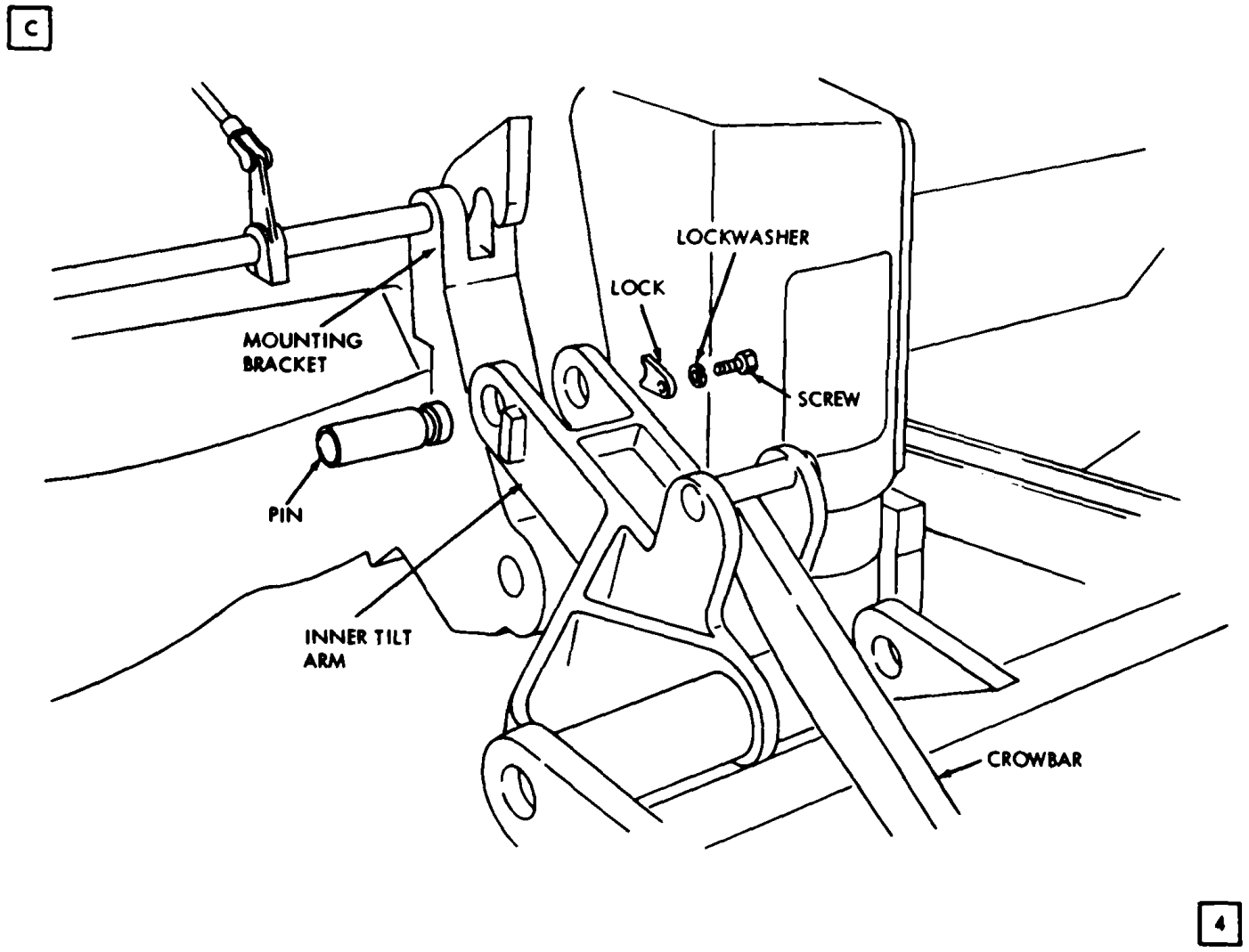

REMOVAL:

INSERT CROWBAR AND USE AS LEVER TO SUPPORT WEIGHT ON INNER TILT ARM (LEFT AND RIGHT).

REMOVE SCREWS, LOCKWASHERS, LOCKS, AND PINS SECURING INNER TILT ARMS (LEFT AND RIGHT) TO HULL MOUNTING BRACKETS.

RELEASE LEVERAGE ON CROWBAR AND LOWER INNER TILT ARMS TO REST ON REAR OF MOLDBOARD.

INSTALLATION:

INSERT CROWBAR AND APPLY LEVERAGE TO RAISE INNER TILT ARMS (LEFT AND RIGHT) TO MOUNTING POSITION ON HULL MOUNTING BRACKETS.

INSTALL PINS, LOCKS, LOCKWASHERS, AND SCREWS.

Figure 3-39. Removal or installation of moldboard Assembly (sheet 2 of 4).

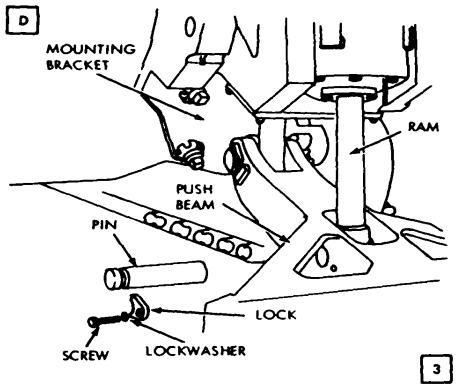

REMOVAL:

TILT MOLDBOARD FACE TOWARD GROUND AND LOWER TO MAXIMUM TILT POSITION AS PRESCRIBED IN PARAGRAPH 3-96, STEP F.

REMOVE SCREWS AND LOCKWASHERS SECURING RAM ARM PIN LOCKS (LEFT AND RIGHT).

REMOVE RAM ARM PINS (LEFT AND RIGHT).

NOTE. APPLY LIFT WITH HOIST AS NECESSARY TO FACILITATE REMOVAL OF PINS. RAISE RAM ARMS TO CLEAR PUSH BEAM WELLS. STRAP OR TIE RAMS IN RAISED POSITION.

INSTALLATION:

INSTALL RAM ARM PIN LOCKS (LEFT AND RIGHT) AND SECURE WITH SCREWS AND LOCKWASHERS.

RAISE MOLDBOARD TO VERTICAL POSITION AS PRESCRIBED IN PARAGRAPH 3-97, STEP G.

REMOVE STRAPS OR WIRE SECURING LEFT AND RIGHT RAM ARMS.

ACTIVATE HYDRAULIC SYSTEM TO LOWER RAMS AND POSITION CONNECTING ENDS IN PUSH BEAM WELLS.

INSERT PIVOT PINS.

NOTE. APPLY LIFT WITH HOIST AND HYDRAULICALLY POSITION RAMS AS NECESSARY TO FACILITATE INSTALLATION OF PINS.

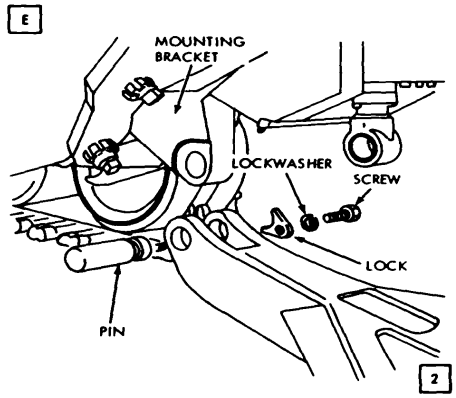

REMOVAL:

REMOVE SCREWS, LOCKWASHERS, LOCKS, AND PINS SECURING LEFT AND RIGHT PUSH BEAMS TO MOUNTING BRACKETS.

APPLY LIFT WITH HOIST UNTIL PUSH BEAM CONNECTING ENDS ARE CLEAR OF MOUNTING BRACKETS.

BACK VEHICLE AWAY FROM MOLDBOARD ASSEMBLY.

LOWER HOIST UNTIL MOLDBOARD FACE IS RESTING ON GROUND.

FOLD PUSH BEAMS OVER BACK OF MOLDBOARD.

REMOVE HOIST CHAINS.

INSTALLATION:

PLACE MOLDBOARD ASSEMBLY ON GROUND, FACE DOWN, WITH CUTTING EDGE TOWARD AND PARALLEL TO THE FRONT OF THE VEHICLE.

ATTACH HOIST CHAINS TO LIFTING EYES ON TOP EDGE OF MOLDBOARD.

UNFOLD PUSH BEAMS UNTIL EXTENDED TOWARD VEHICLE.

APPLY LIFT WITH HOIST UNTIL CONNECTING ENDS OF PUSH BEAMS ARE POSITIONED AT SAME HEIGHT FROM GROUND AS MOUNTING BRACKETS ON HULL.

MOVE VEHICLE FORWARD TO POSITION BRACKETS IN PUSH BEAMS.

INSTALL PINS AND SECURE WITH LOCKS, LOCKWASHERS, AND SCREWS.

Figure 3-40. Removal or installation of moldboard assembly (sheet 3 of 4).

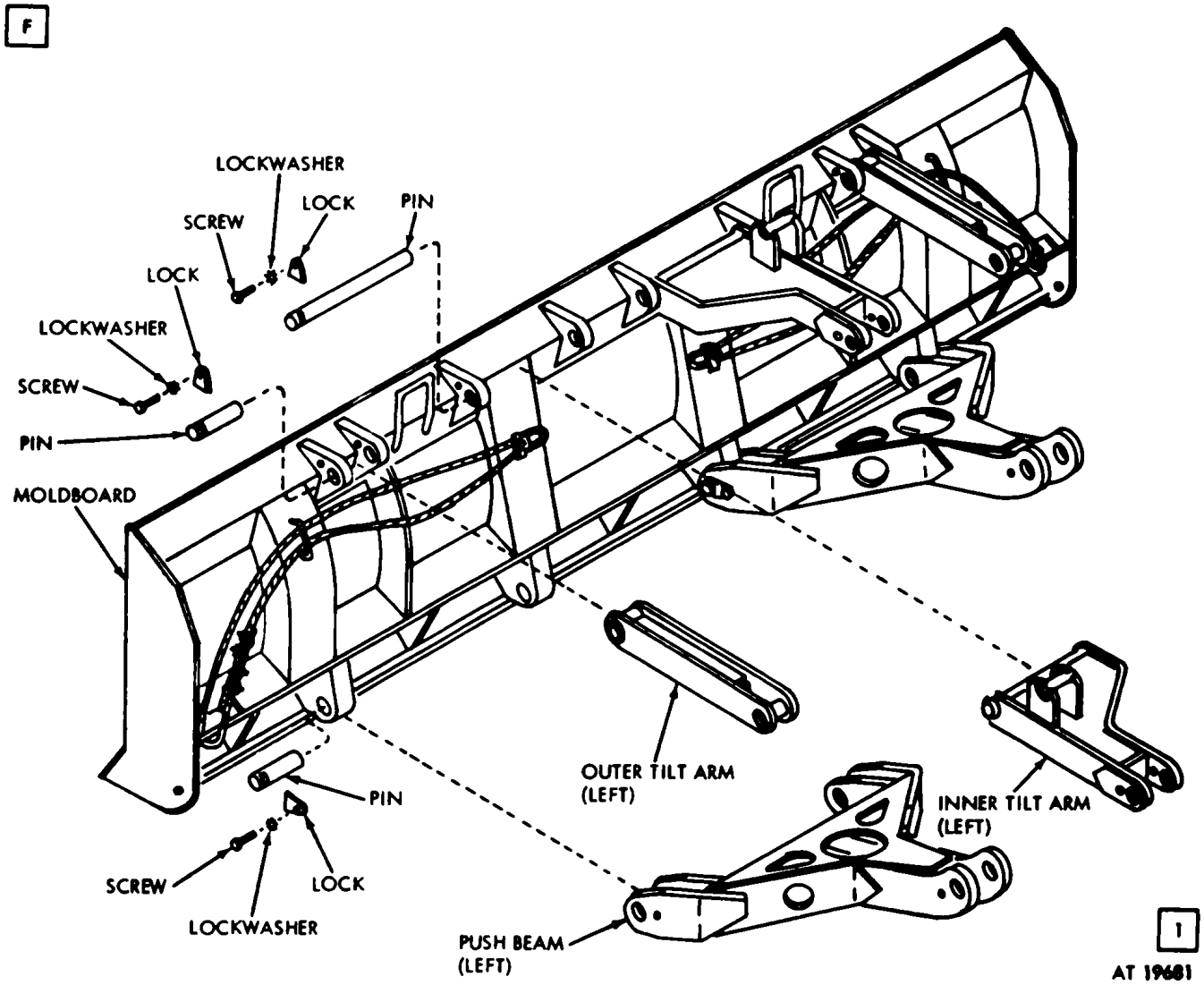

Figure 3-41. Removal or installation ,of moldboard assembly (sheet 4 of 4).

f. Remove straps or bands securing cylinder rams in raised position. Activate hydraulic system and position rams in push beam as u shown in view.

g. Install pivot pins and secure a shown in figure 3-40, view 3.

h. Activate hydraulics and raise bottom edge of moldboard of ground (3 to 4 inches). Apply lifting power to hoist to tilt moldboard toward a vertical position.

i. Position and connect inner tilt arm as shown in figure 3-39, view 4.

j. Position and connect outer tilt arms as shown in figure 3-38, view 5.

k. Remove hoist chains, check operation of moldboard and hydraulic system by operating moldboard through all positions. If binding of linkages is observed, check for proper installation of pivot pin. Place moldboard in stow position and check locking action of carrying hooks. Adjust as necessary (figure 3-44).

3-98. Replacement of Moldboard Cutting Edge (Blade).

3-99. Removal and Installation. Refer to figure 3-42 for instructions covering the removal and installation of the moldboard cutting edge.

3-100. Replacement of Emergency Lifting Cables.

3-101. Removal and Installation. Refer to figure 3-43 for removal and installation instructions. Follow the applicable sequence of views for removal and the numerical sequence of views for installation.

3-102. Replacement of Carrying Hooks and Shafts.

3-103. Removal and Installation. Refer to figures 3-44 and 3-45 for removal and installation instructions Follow the alphabetical sequence of views for removal and the numerical sequence of views for installation.

3-104. Repair. Refer to figure 3-44 and 3-45 for repair instructions.

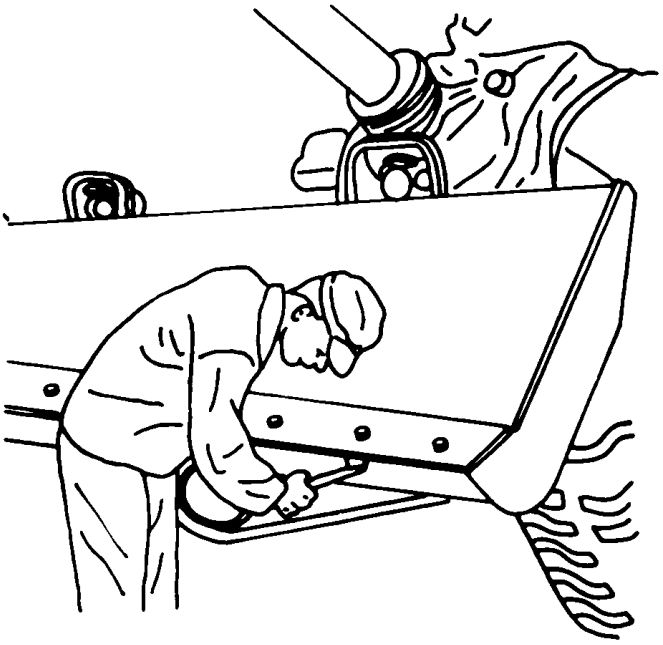

PLACE MOLDBOARD IN STOWED POSITION.

WARNING: BE SURE MOLDBOARD IS SECURED BY CARRYING HOOKS BEFORE PROCEEDING WITH REMOVAL.

REMOVE/INSTALL SHOULDER BOLTS, NUTS AND LOCKWASHERS SECURING THE CUTTING EDGE (BLADE) TO THE MOLDBOARD.

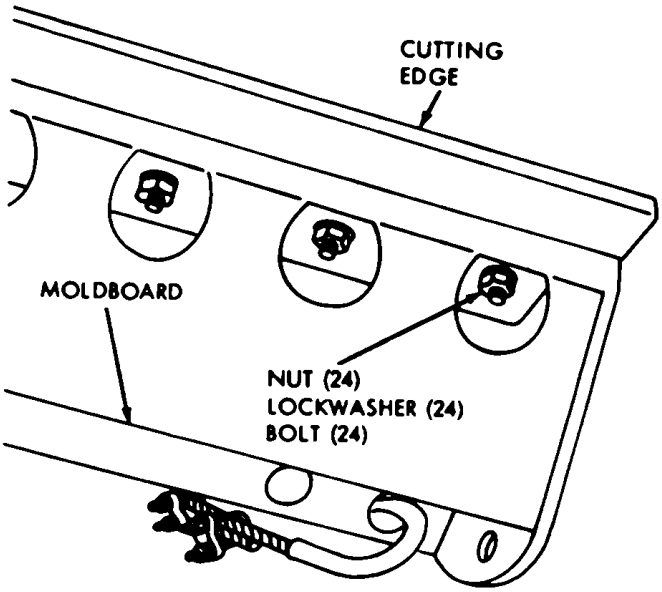

NOTE. AS AN AID IN SUPPORTING CUTTING EDGE WHEN REMOVING, LEAVE BOLT IN EACH END OF BLADE UNTIL OTHERS HAVE BEEN REMOVED. ON INSTALLATION, POSITION CUTTING EDGE ON MOLDBOARD AND ASSEMBLE DOLTS IN EACH END AND ONE AT CENTER TO SUPPORT WEIGHT AND FACILITATE ALINEMENT FOR REMAINING DOLTS.

REMOVE/POSITION CUTTING EDGE.

AT 19682

Figure 3-42. Removal or installation of moldboard cutting edge.

PRELIMINARY PROCEDURES:
LOWER MOLDBOARD TO GROUND.
STOP VEHICLE ENGINE AND APPLY PARKING BRAKE.

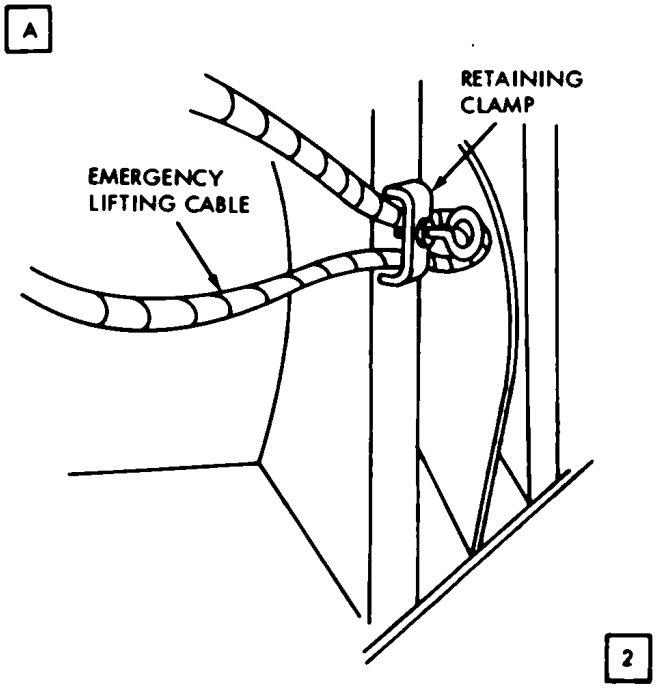

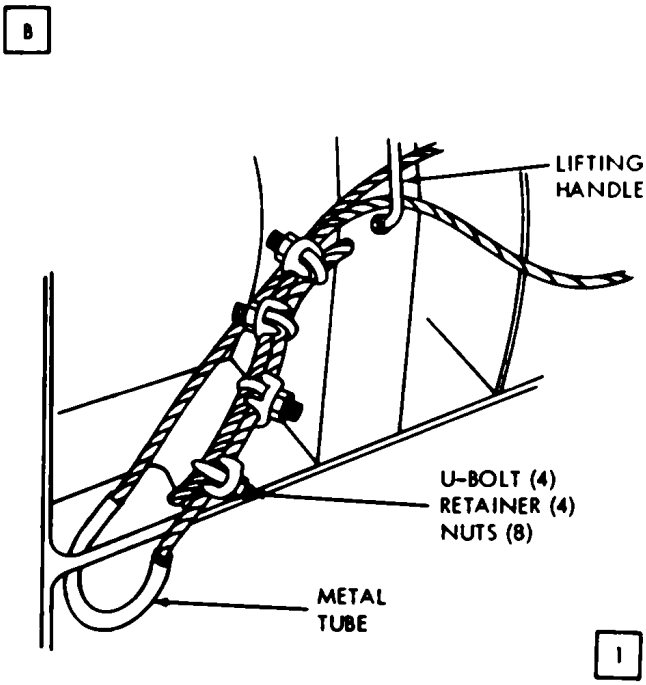

REMOVAL: REMOVE NUT, LOCKWASHER AND EYEBOLT SECURING RETAINING CLAMP.

REMOVE CABLE FROM RETAINING CLAMP.

REMOVE CABLE FROM LIFTING HANDLE.

INSTALLATION: TIGHTEN NUT. LOCKWASHER AND EYEBOLT SECURING RETAINING CLAMP.

INSTALL CABLE IN RETAINING CLAMP.

INSERT CABLE THROUGH LIFTING HANDLE.

REMOVAL: REMOVE FOUR U-BOLTS AND RETAINERS FROM CABLE.

REMOVE CABLE AND METAL TUBE FROM MOLDBOARD.

INSTALLATION: INSERT CABLE END THROUGH OUTBOARD HOLE IN MOLDBOARD RIB; POSITION METAL TUBE THROUGH HOLE; OVERLAP CABLE END 14-1/2 INCHES.

INSTALL U-BOLTS, RETAINERS. POSITION U-BOLTS APPROXIMATELY 2 INCHES FROM ENDS OF OVERLAP AND SPACE AS SHOWN.

Figure 3-43. Removal or installation of emergency lifting cables.

PRELIMINARY PROCEDURE:
LOWER MOLDBOARD TO GROUND.
STOP VEHICLE ENGINE AND APPLY PARKING BRAKE.

A

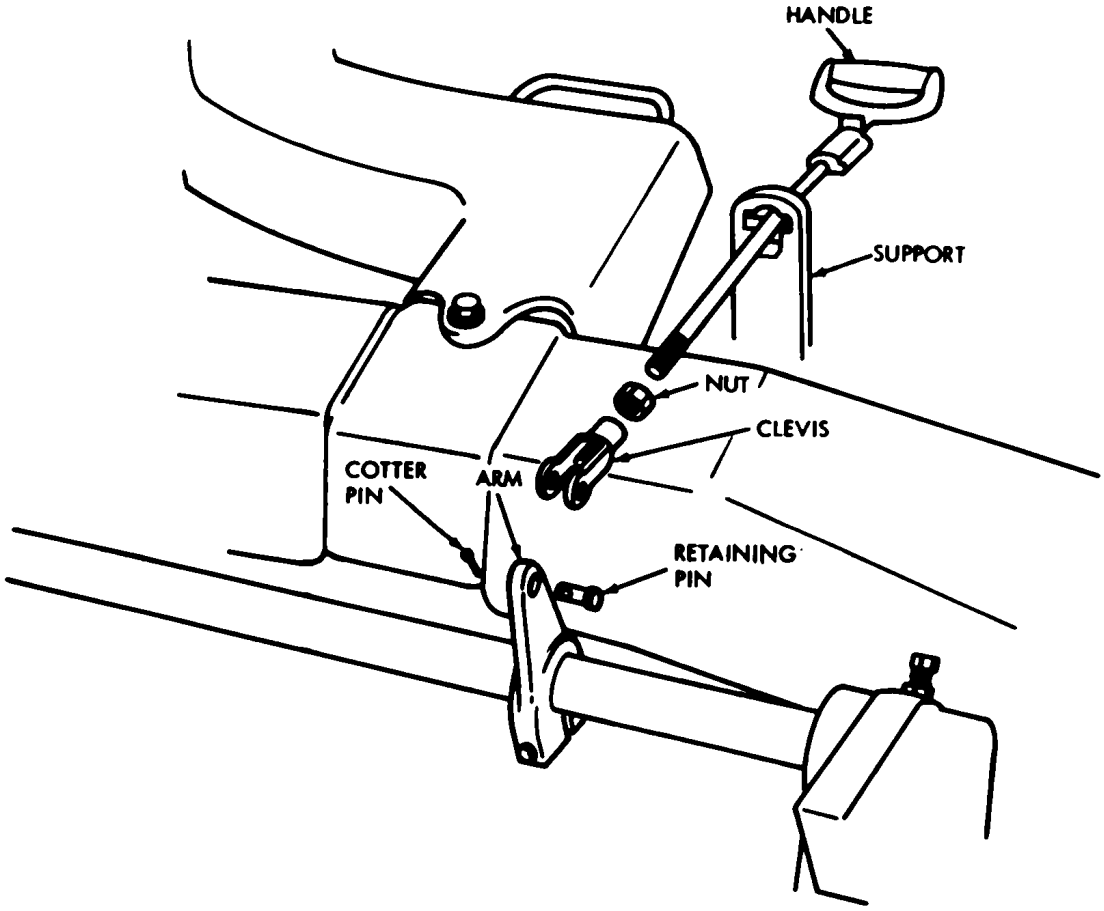

3

REMOVAL:

REMOVE COTTER PIN FROM RETAINING PIN.

REMOVE RETAINING PIN FROM CLEVIS AND ARM.

LOOSEN NUT ON HANDLE AND UNSCREW CLEVIS AND NUT FROM HANDLE.

REMOVE HANDLE FROM SUPPORT.

INSTALLATION: INSTALL COTTER PIN IN RETAINING PIN.

PLACE CARRYING HOOKS IN FORWARD POSITION AND ATTACH CLEVIS TO ARM WITH RETAINING PIN.

DOGS ON HANDLE SHOULD FIT FREELY BEHIND SUPPORT.

ADJUST CLEVIS, IF NECESSARY, AND TIGHTEN NUT.

INSERT HANDLE IN SUPPORT.

SCREW NUT AND CLEVIS ONTO HANDLE.

Figure 3-44. Removal or installation of moldboard carrying hooks and shafts (sheet 1 of 2).

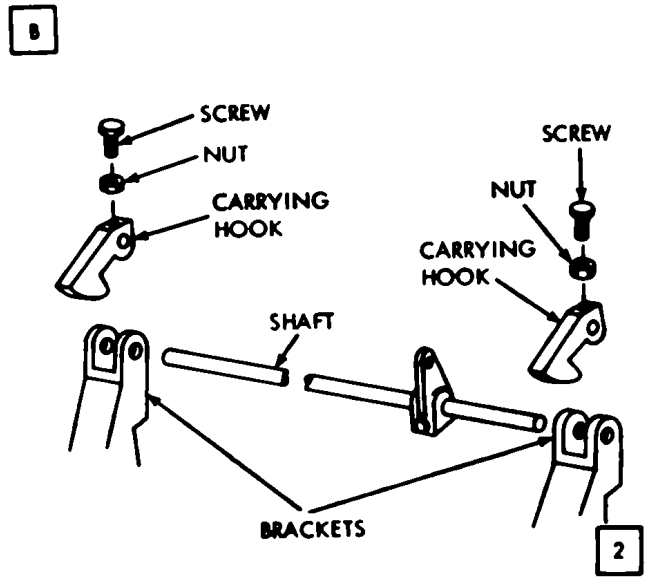

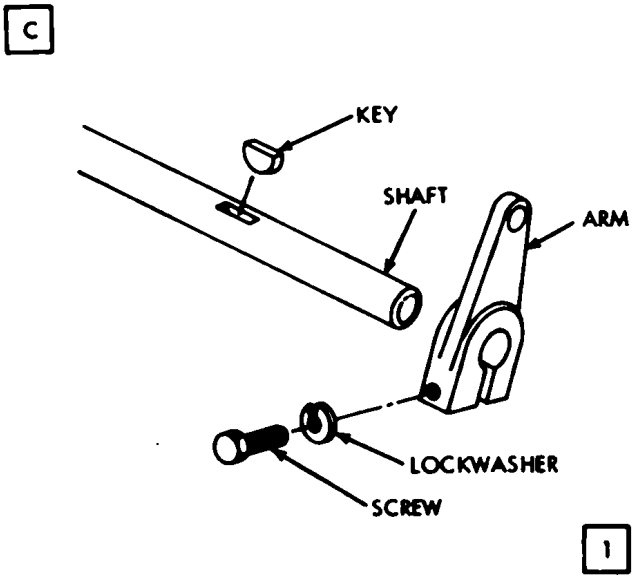

REMOVAL:

LOOSEN NUT AND SCREW ON RIGHT AND LEFT ENDS OF SHAFT.

REMOVE SHAFT FROM BRACKETS AND CARRYING HOOKS.

REMOVE NUT AND SCREW FROM CARRYING HOOKS.

INSTALLATION: INSTALL SHAFT INTO CARRYING HOOKS AND BRACKETS.

ALINE FLAT SIDE ON SHAFT WITH SCREW IN CARRYING HOOKS.

TIGHTEN SCREW AND NUT.

REMOVAL:

REMOVE SCREW AND LOCKWASHER FROM ARM.

REMOVE ARM AND KEY FROM SHAFT.

INSTALLATION: INSTALL KEY AND ARM ON SHAFT AND SECURE WITH SCREW AND LOCKWASHER.

Figure 3-45. Removal or installation of moldboard carrying hooks and shafts (sheet 2 of 2).

3-105. Adjustment. Refer to figures 3-44 and 3-45 for adjustment of moldboard carrying hooks and shafts linkage).

Section VIII. CONTROL ASSEMBLY

3-106. General.

3-107. This section contains instructions for removal and installation of the control assembly.

3-108. Description.

3-109. The bulldozer control assembly is located in the driver's compartment in the forward section of the hull. The control assembly handle is connected by mechanical linkage to the directional control valve. The mechanical linkage consists primarily of connecting rods, which are terminated with clevises and link arms which are used to change the direction of travel of the rods. Where the connecting rod passes through the hull, the opening is waterproofed by means of a sleeve, bushing, and seal.

3-110. Replacement of Directional Control Valve Linkage.

3-111. Removal and Installation. Refer to figures 3-46 and 3-47 for instruction removal and installation of directional control valve linkage. Follow the alphabetical sequence of views for removal and the numerical sequence of views for installation.

3-112. Replacement of Box Assembly.

3-113. Removal and Installation. Refer to figures 3-48 through 3-50 for instructions on removal and installation of box assembly. Follow the alphabetical sequence of views for removal and the numerical sequence of views for installation.

PRELIMINARY PROCEDURE:
LOWER MOLDBOARD TO GROUND.
STOP VEHICLE ENGINE AND APPLY PARKING BRAKE.

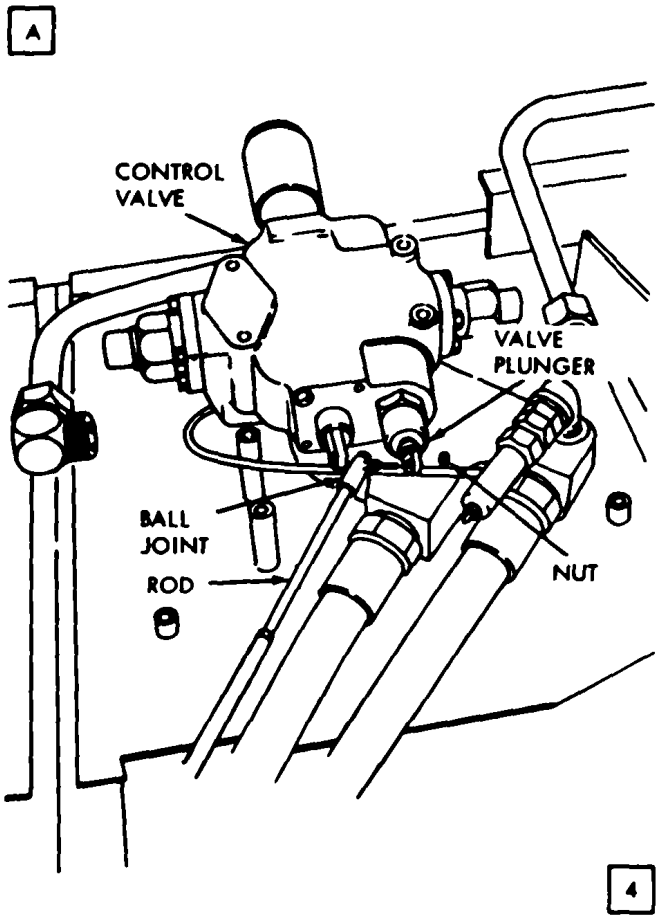

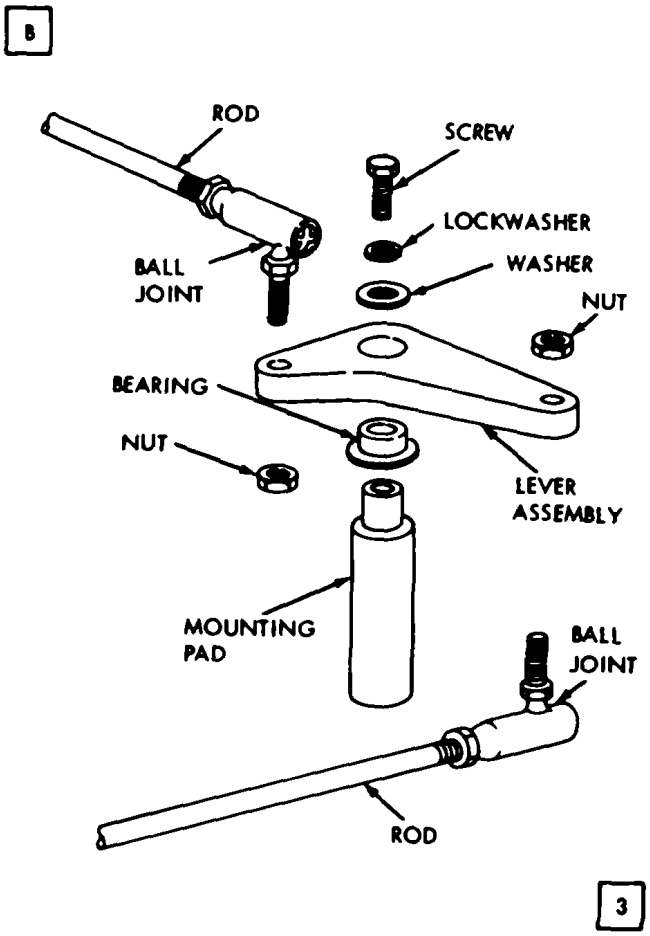

LOOSEN/TIGHTEN NUT SECURING VALVE PLUNGER FROM/TO BALL JOINT.

DISCONNECT/CONNECT BALL JOINT FROM/TO VALVE PLUNGER ON CONTROL VALVE.

LOOSEN/TIGHTEN NUT SECURING LEVER ASSEMBLY FROM/TO BALL JOINT.

DISCONNECT/CONNECT ROD FROM/TO LEVER ASSEMBLY.

LOOSEN/TIGHTEN NUT SECURING LEVER ASSEMBLY FROM/TO BALL JOINT.

DISCONNECT/CONNECT ROD FROM/TO LEVER ASSEMBLY.

REMOVE/INSTALL SCREW, LOCKWASHER, AND WASHER SECURING LEVER ASSEMBLY FROM/TO MOUNTING PAD.

AT 19686

Figure 3-46. Removal or installation of directional control valve linkage (1 of 2).

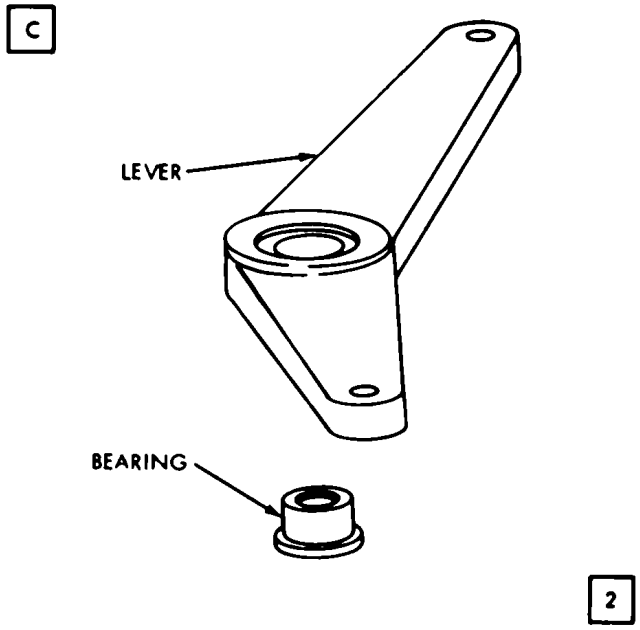

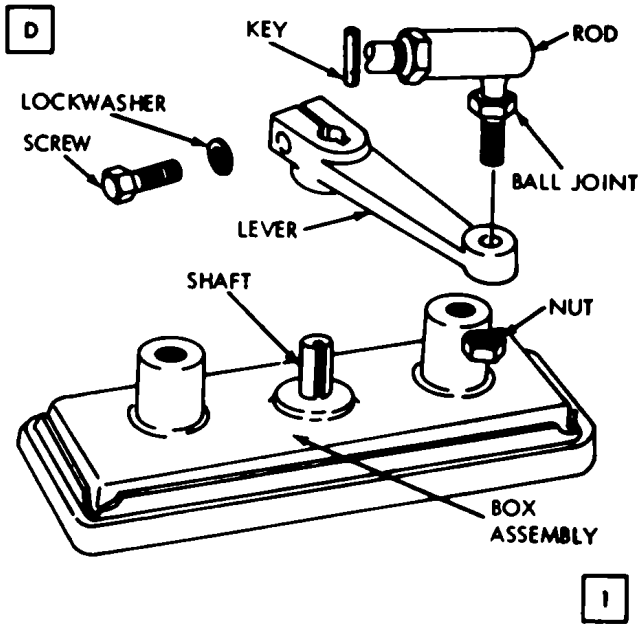

REMOVE/INSTALL BEARING FROM/TO LEVER.

DISCONNECT/CONNECT NUT SECURING BALL JOINT FROM/TO LEVER.

REMOVE/INSTALL ROD.

LOOSEN/TIGHTEN SCREW AND LOCKWASHER SECURING LEVER TO SHAFT.

REMOVE/POSITION KEY FROM/TO SHAFT.

Figure 3-47. Removal or installation of directional control valve linkage (sheet 2 of 2).

PRELIMINARY PROCEDURE:
LOWER MOLDBOARD TO GROUND.
STOP VEHICLE ENGINE AND APPLY PARKING BRAKE.
DISCONNECT LEVER FROM BOX ASSEMBLY SHAFT
(FIG. 3-47, VIEW D).

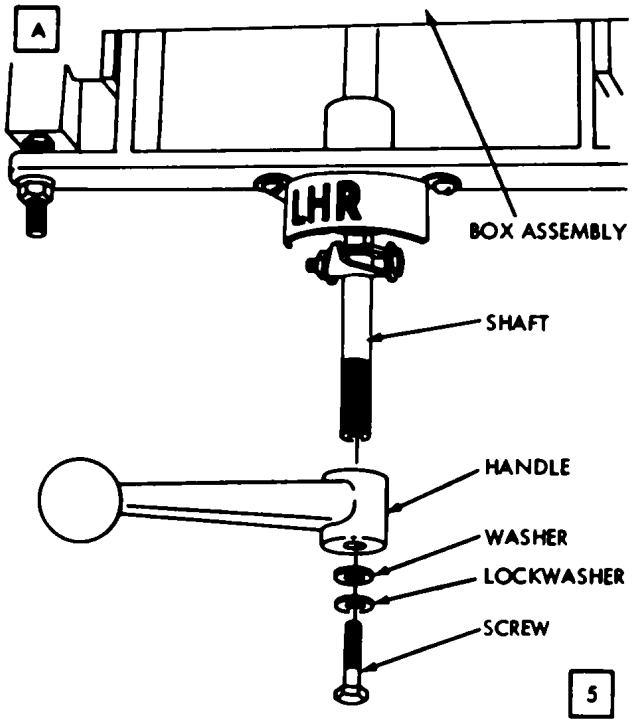

REMOVE/INSTALL SCREW, LOCKWASHER AND WASHER SECURING HANDLE FROM/TO BOX ASSEMBLY SHAFT.

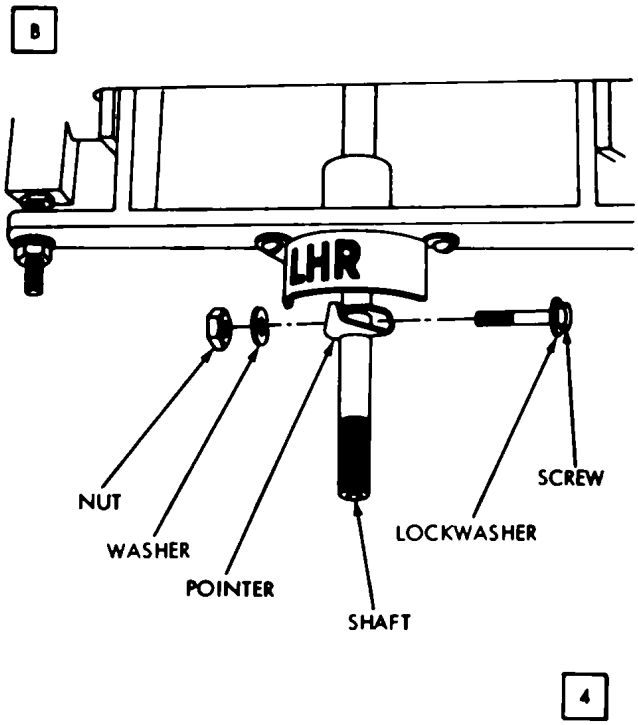

REMOVE/INSTALL SCREW, LOCKWASHER, WASHER AND NUT SECURING POINTER FROM/TO SHAFT.

AT 19688

Figure 3-48. Removal or installation of control box assembly (sheet 1 of 3).

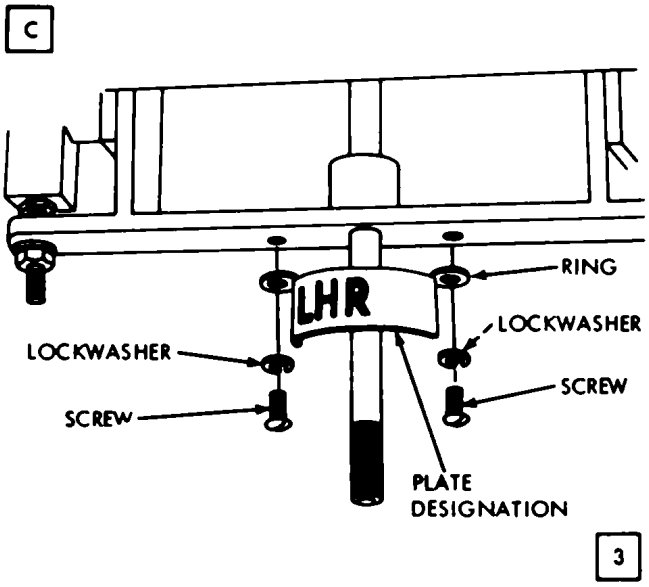

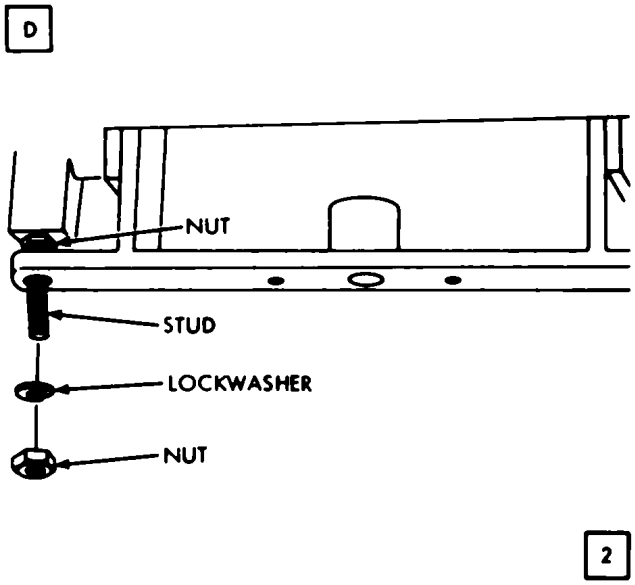

REMOVE/INSTALL SCREWS AND LOCKWASHERS SECURING DESIGNATION' PLATE FROM/TO BOX ASSEMBLY.

REMOVE/INSTALL SNAP RING FROM/TO SHAFT AND REMOVE/INSTALL SHAFT.

REMOVE/INSTALL NUTS AND LOCKWASHERS SECURING BOX ASSEMBLY FROM/TO STUDS.

REMOVE/INSTALL LOCK NUTS AND STUDS FROM/TO MOUNTING PADS.

AT 19689

Figure 3-49. Removal or installation of control box assembly (sheet 2 of 3).

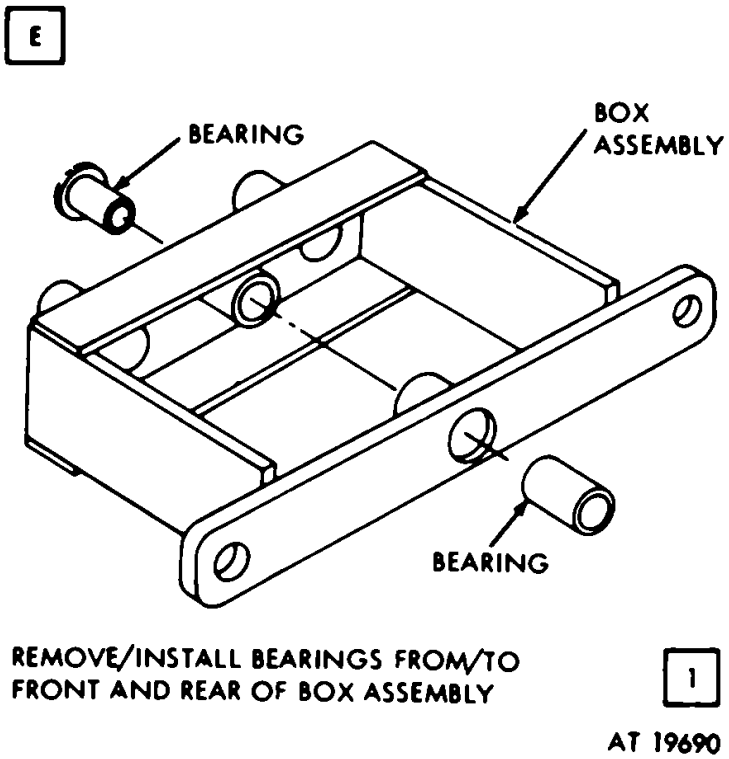

Figure 3-50. Removal or installation of control box assembly (sheet 3 of 3).

Section IX. ELECTROMAGNETIC CLUTCH ELECTRICAL SYSTEM

3-114. General.

3-115. This section covers description and maintenance of the electrical magnetic clutch electrical system. Organizational maintenance of the components consists of: replacement of electrical switch light, leads and connectors, replacement of right-angle drive plugs and fittings.

3-116. Description.

3-117. The hydraulic power to operate the bulldozer is furnished by a hydraulic pump and drive assembly mounted on the vehicle transmission. The pump and drive assembly consists of a right-angle drive unit connected to the transmission power take-off outlet; a hydraulic pump to assembly; and a magnetic clutch which engages the pump to the right-angle drive. The magnetic clutch is operated electrically by a switch on the master control panel in the driver's compartment. A discharge line from the pump supply fluid (oil under pressure, to intake port on the bulldozer control valve located on the right front fender. The discharge line is routed through the bulldozer control valve to operate the moldboard cylinder and ram assemblies.

3-118. Master Control Panel.

3-119. Removal and Installation. Refer to TM 9-2350-224-20 for removal and installation instructions.

3-120. Replacement of Electromagnetic Clutch Electrical System.

3-121. Removal and Installation. Refer to figures 3-51 through 3-53 for removal and installation instructions. Follow the alphabetical sequence of views for removal and the numerical sequence of views for installation.

3-122. Repair of Lead Assemblies. Examine the lead assembly for damaged connector, conductors or insulation. Replace defective connector parts. Refer to fig 3-54 through 3-56 for instructions concerning replacement of lead assembly connectors, female plugs, male plugs and female receptacles. Repair damaged wires by wrapping bare conductors with pressure sensitive, waterproof insulating tape, or install a jumper wire as a substitute. Refer to wiring diagram, figure 3-12, for proper connections of lead assemblies.

Note. **Rubber-to-rubber contacts of bell-type connector may be lubricated lightly with silicone compound to assist assembly.**

3-123. Replacement of Right-Angle-Drive Power Take-Off Plugs, Fittings and Gasket.

3-124. Removal and Installation. Refer to figure 3-57 for removal and installation instructions.

PRELIMINARY PROCEDURE:
STOP VEHICLE ENGINE AND APPLY BRAKES.
TURN OFF MASTER SWITCH AND DISCONNECT BATTERIES (TM9-2350-224-10).

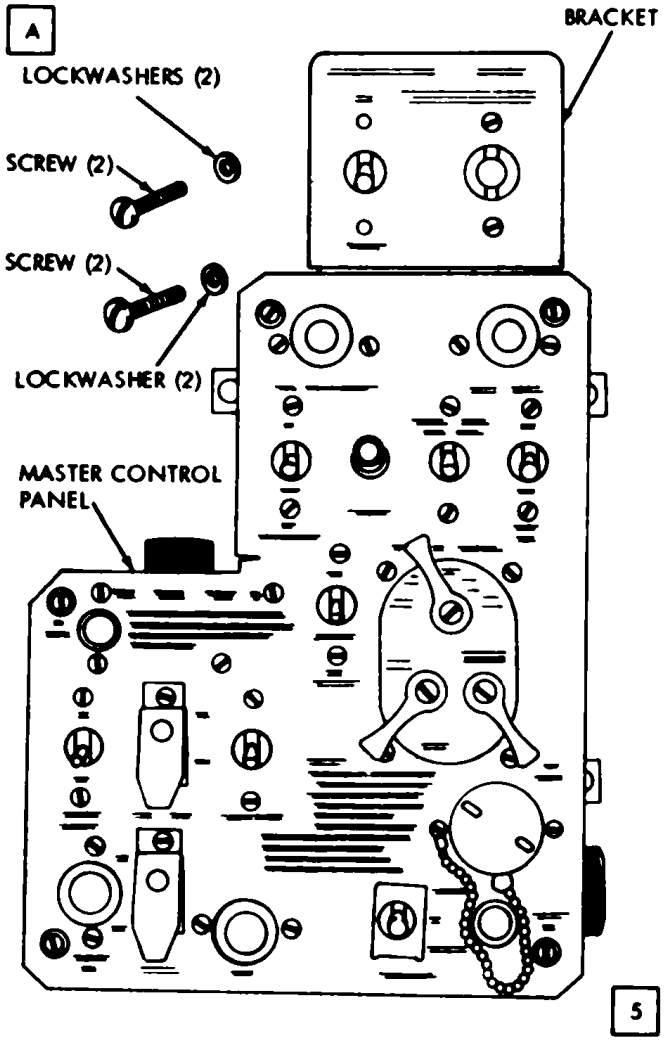

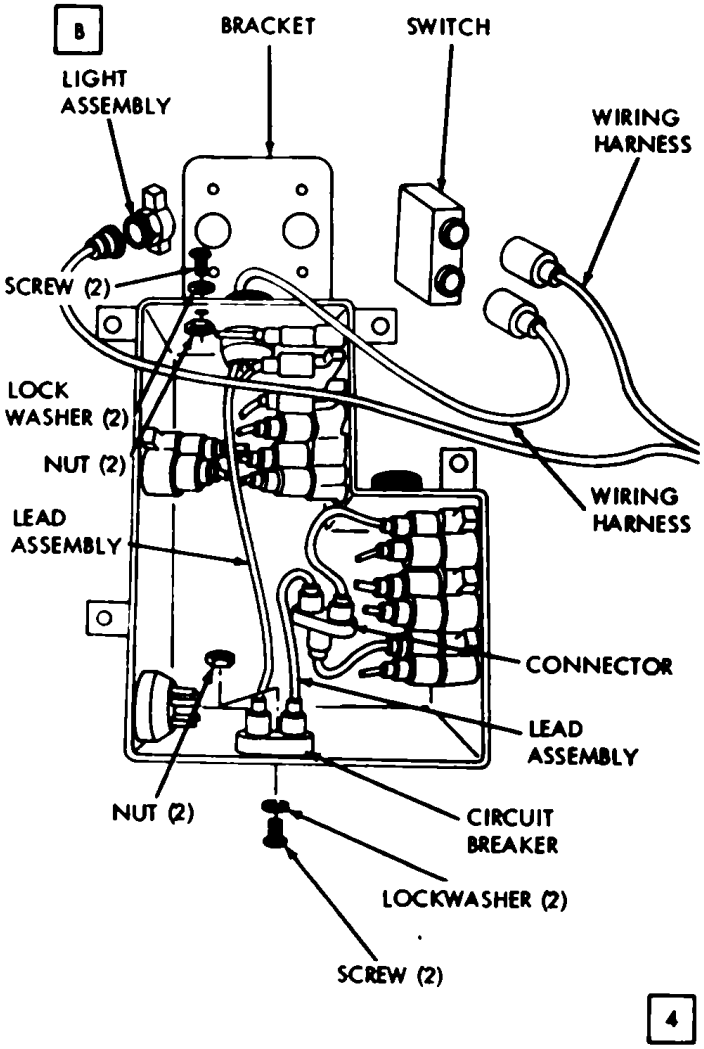

REMOVE MASTER CONTROL PANEL FROM VEHICLE (TM9-2350-224-20).

REMOVE/INSTALL TWO (2) SCREWS AND LOCK WASHERS SECURING SWITCH FROM/TO BRACKET.

REMOVE/INSTALL TWO (2) SCREWS AND LOCKWASHERS SECURING LIGHT ASSEMBLY FROM/TO BRACKET.

DISCONNECT/CONNECT LEAD ASSEMBLY FROM/TO CIRCUIT BREAKER AND CONNECTOR.

DISCONNECT/CONNECT WIRING HARNESSES FROM/TO SWITCH AND LIGHT ASSEMBLY.

REMOVE/INSTALL TWO (2) SCREWS, LOCKWASHERS, AND NUTS SECURING BRACKET FROM/TO MASTER CONTROL PANEL.

REMOVE/INSTALL TWO (2) SCREWS, LOCKWASHERS, AND NUTS SECURING CIRCUIT BREAKER FROM/TO MASTER CONTROL PANEL.

AT 19691

Figure 3-51. Removal or installation of electro-magnetic clutch electrical system sheet (1 of 3).

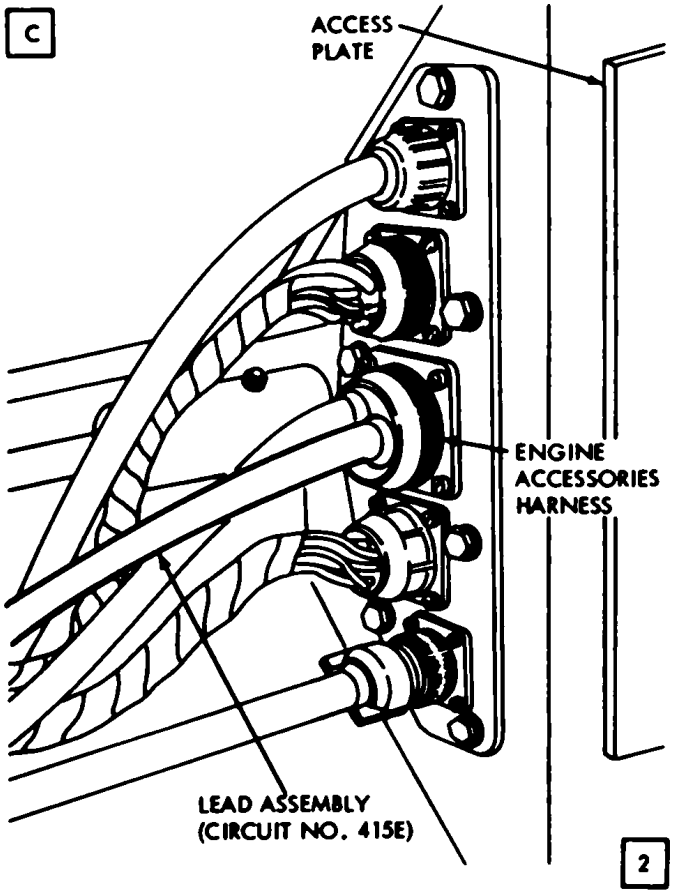

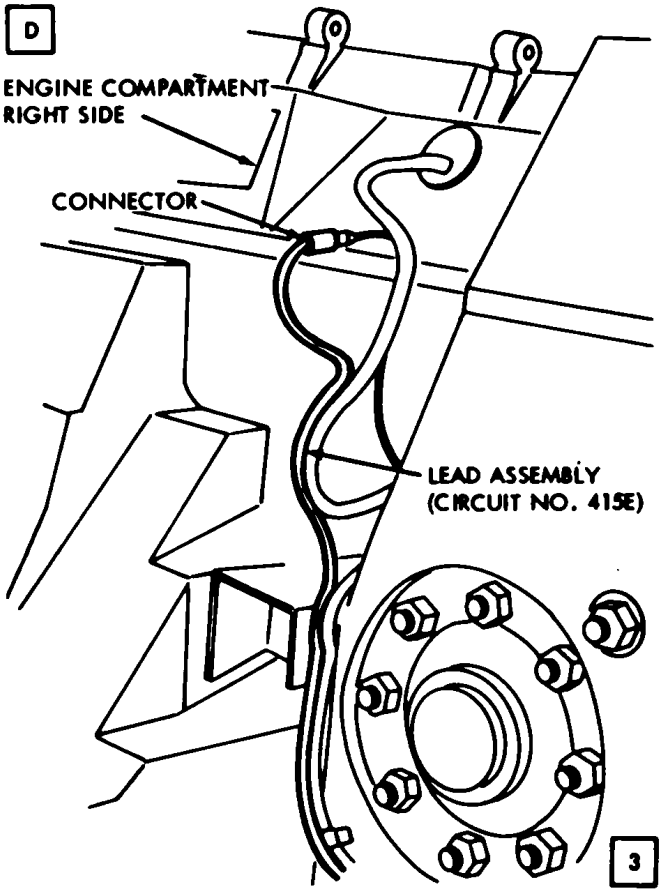

REMOVE/INSTALL BOLTS SECURING HULL ELECTRICAL WIRING HARNESS CLAMPS AND COVERS.

REMOVE/INSTALL LEAD ASSEMBLY (CIRCUIT NUMBER 415E) FROM/TO HULL FLOOR.

REMOVE/INSTALL LEAD ASSEMBLY (CIRCUIT NUMBER 415E) FROM/TO PIN 'E' OF ACCESSORIES WIRING HARNESS QUICK DISCONNECT (CIRCUIT NUMBERS 475C AND 475D).

REMOVE/INSTALL LEAD ASSEMBLY (CIRCUIT NUMBER 415E) FROM/TO ACCESSORIES WIRING HARNESS (CIRCUIT NUMBER 475C).

DISCONNECT/CONNECT LEAD ASSEMBLY (CIRCUIT NUMBER 415 E) BETWEEN CONNECTOR AND ELECTROMAGNETIC CLUTCH.

Figure 3-52. Removal or installation of electro-magnetic clutch electrical system (sheet 2 of 3).

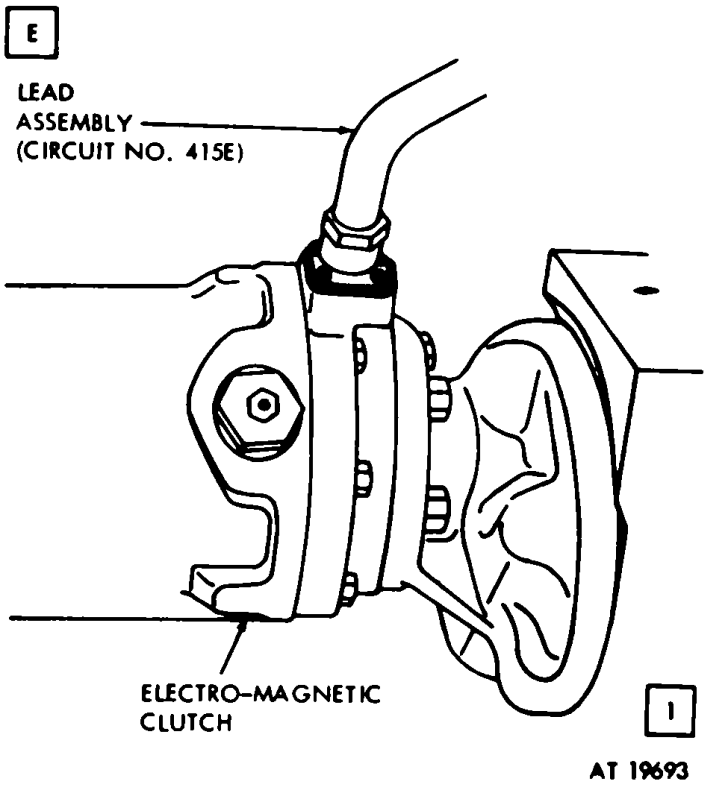

DISCONNECT/CONNECT LEAD ASSEMBLY (CIRCUIT NUMBER 415E) BETWEEN ELECTROMAGNETIC CLUTCH AND CONNECTOR.

Figure 3-53. Removal or installation of electro-magnetic clutch electrical system (sheet 3 of 3).

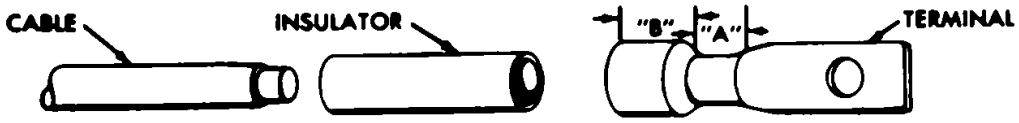

1 — STRIP CABLE INSULATION EQUAL TO DEPTH OF TERMINAL WELL.

2 — SLIDE INSULATOR OVER CABLE.

3 — INSERT CABLE INTO TERMINAL WELL AND CRIMP CONDUCTOR IN AREA "A" AND CABLE INSULATION IN AREA "B".

4 — SLIDE INSULATOR OVER CRIMPED END OF TERMINAL.

A — TERMINAL-TYPE CABLE CONNECTOR

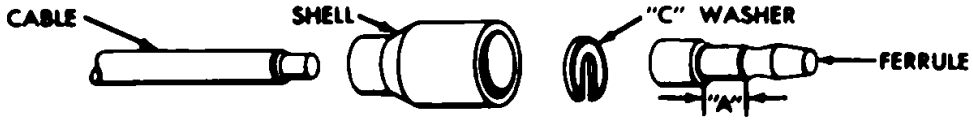

1 — STRIP CABLE INSULATION EQUAL TO DEPTH OF FERRULE WELL.

2 — SLIDE SHELL OVER CABLE.

3 — INSERT CABLE INTO FERRULE WELL AND CRIMP IN AREA "A" ONLY.

4 — PLACE "C" WASHER OVER CABLE AT REAR OF FERRULE AND SLIDE SHELL OVER "C" WASHER AND TERMINAL.

B — MALE CABLE CONNECTOR

1 — STRIP CABLE INSULATION APPROXIMATELY 1/8-INCH.

2 — SLIDE SHELL OVER CABLE INSULATION.

3 — SLIDE WASHER OVER CONDUCTOR TO CABLE INSULATOR.

4 — INSERT CABLE INTO TERMINAL ASSEMBLY AND CRIMP.

5 — SLIDE SHELL AND WASHER OVER TERMINAL.

C — FEMALE CABLE CONNECTOR (WITH WASHER) - (12 GAGE CABLE)

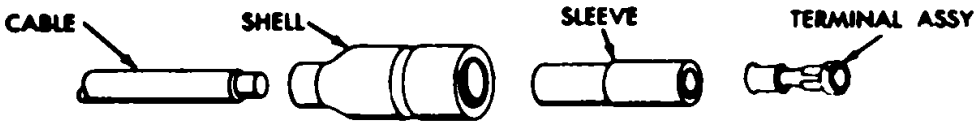

1 — STRIP CABLE INSULATION APPROXIMATELY 1/8-INCH.

2 — SLIDE SHELL AND SLEEVE OVER CABLE.

3 — INSERT CABLE INTO TERMINAL ASSEMBLY AND CRIMP.

4 — SLIDE SHELL AND SLEEVE OVER TERMINAL.

D — FEMALE CABLE CONNECTOR (WITH SLEEVE) - (14 AND 16 GAGE CABLE)

AT 19694

Figure 3-54. Replacement of cable connectors.

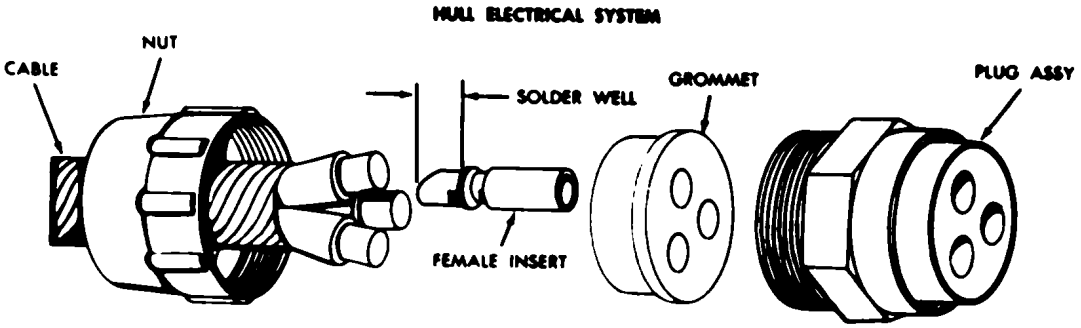

1 - STRIP CABLE INSULATION EQUAL TO DEPTH Of SOLDER WELLS OF INSERTS.
2 - REMOVE GROMMET RETAINING NUT FROM PLUG ASSEMBLY AND SLIDE BACK OVER CABLE.
3 - SLIDE GROMMET BACK FROM PLUG ASSEMBLY AND REMOVE DAMAGED CABLE.
4 - PASS REPLACEMENT CABLE THROUGH GROMMET RETAINING NUT AND GROMMET, INSERT INTO SOLDER WELLS Of INSERTS. AND SOLDER.
5 - SLIDE GROMMET OVER INSERTS AND PRESS INTO PLUG ASSEMBLY.
6 - THREAD GROMMET RETAINING NUT TO PLUG ASSEMBLY.

E - FEMALE TYPE PLUG ASSEMBLY (WITH HEXAGON NUT)

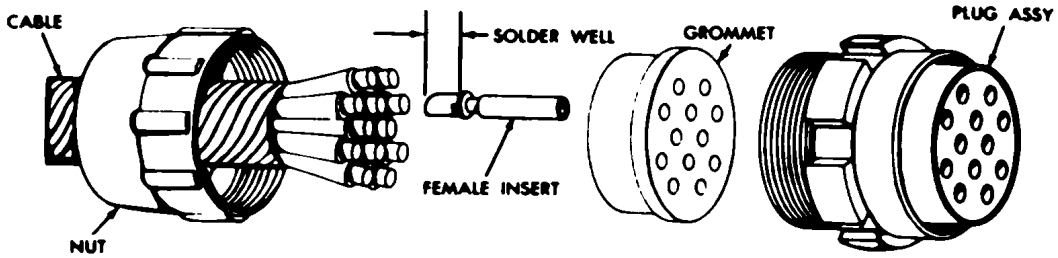

1 - STRIP CABLE INSULATION EQUAL TO DEPTH Of SOLDER WELLS Of INSERTS.
2 - REMOVE GROMMET RETAINING NUT FROM PLUG ASSEMBLY AND SLIDE BACK OVER CABLE.
3 - SLIDE GROMMET BACK FROM PLUG ASSEMBLY AND REMOVE DAMAGED CABLE.
4 - PASS REPLACEMENT CABLE THROUGH GROMMET RETAINING NUT AND GROMMET. INSERT INTO SOLDER WELLS OF INSERTS, AND SOLDER.
5 - SLIDE GROMMET OVER INSERTS AND PRESS INTO PLUG ASSEMBLY UNTIL SEATED.
6 - THREAD GROMMET RETAINING NUT TO PLUG ASSEMBLY.

NOTE. CONTACT SIZES 8, 4, AND 0 MAY BE REMOVED FROM CONNECTOR TO SIMPLIFY REPAIR.

F - FEMALE - TYPE PLUG ASSEMBLY **AT19695**

Figure 3-55. Replacement of cable female plugs.

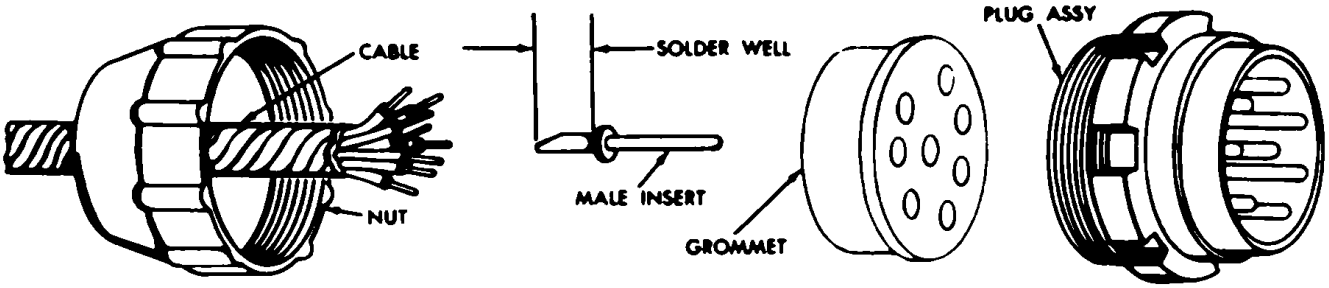

1 - STRIP CABLE INSULATION EQUAL TO DEPTH Of SOLDER WELLS OF INSERTS.
2 - REMOVE GROMMET RETAINING NUT FROM PLUG ASSEMBLY AND SLIDE BACK OVER CABLE.
3 - SLIDE GROMMET BACK FROM PLUG ASSEMBLY AND REMOVE DAMAGED CABLE.
4 - PASS REPLACEMENT CABLE THROUGH GROMMET RETAINING NUT AND GROMMET. INSERT INTO SOLDER WELLS Of INSERTS, AND SOLDER.
5 - SLIDE GROMMET OVER INSERTS AND PRESS INTO PLUG ASSEMBLY UNTIL SEATED.
6 - THREAD GROMMET RETAINING NUT TO PLUG ASSEMBLY.

G - MALE - TYPE PLUG ASSEMBLY (WITH SPANNER COUPLING NUT).

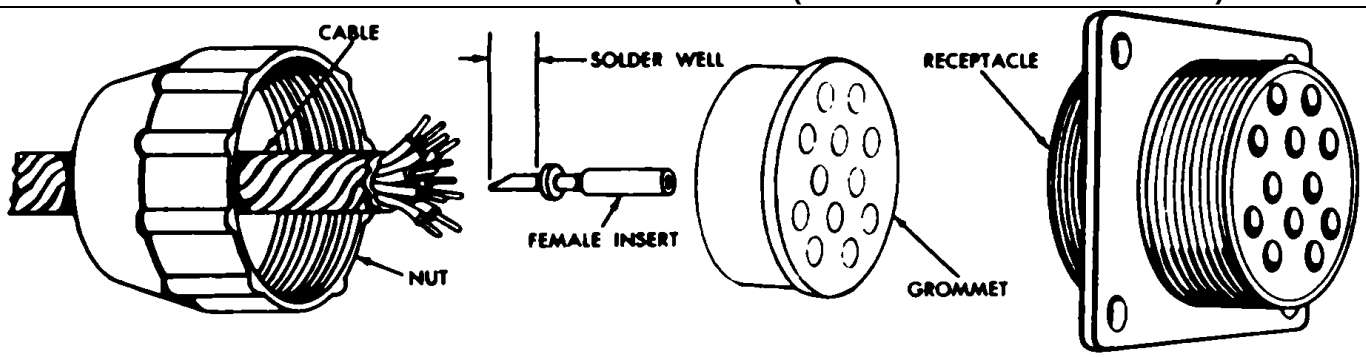

1 - STRIP CABLE INSULATION EQUAL TO DEPTH Of SOLDER WELLS Of INSERTS.
2 - REMOVE GROMMET RETAINING NUT FROM PLUG ASSEMBLY AND SLIDE BACK OVER CABLE.
3 - SLIDE GROMMET BACK FROM RECEPTACLE ASSEMBLY AND REMOVE DAMAGED CABLE.
4 - PASS REPLACEMENT CABLE ENDS THROUGH GROMMET RETAINING NUT AND GROMMET. INSERT. INTO SOLDER WELLS Of INSERTS AND SOLDER.
5 - SLIDE GROMMET OVER INSERTS AND PRESS INTO RECEPTACLE ASSEMBLY UNTIL SEATED.
6 - THREAD GROMMET RETAINING NUT TO RECEPTACLE ASSEMBLY.

NOTE. CONTACT SIZES 8, 4, AND 0 MAY BE REMOVED FROM CONNECTOR TO SIMPLIFY REPAIR.

H - FEMALE - TYPE RECEPTACLE ASSEMBLY

Figure 3-56. Replacement of cable male plugs and female receptacles.

PRELIMINARY PROCEDURE:
STOP VEHICLE ENGINE AND APPLY PARKING BRAKE.
PLACE HYDRAULIC PUMP SWITCH TO "OFF' POSITION (FIG. 2-8).

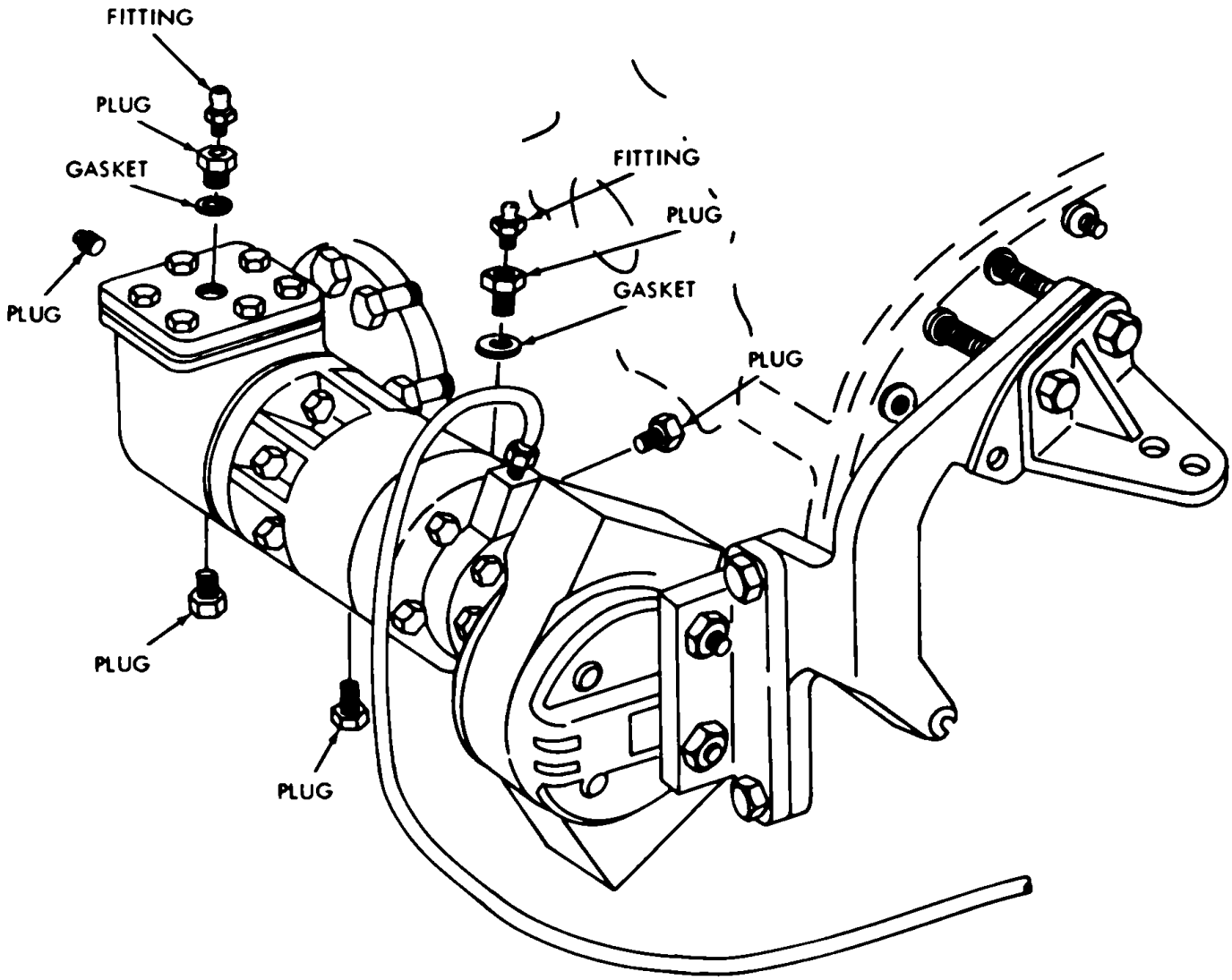

REMOVAL:

REMOVE RIGHT ANGLE DRIVE FITTING, PLUG, AND GASKET FROM TOP OF DRIVE.

REMOVE RIGHT ANGLE DRIVE OIL LEVEL AND DRAIN PLUGS.

REMOVE HYDRAULIC PUMP FITTING, PLUG, AND GASKET FROM TOP OF PUMP.

REMOVE HYDRAULIC PUMP OIL LEVEL AND DRAIN PLUGS.

INSTALLATION:

CLEAN PLUGS AND FITTINGS BEFORE INSTALLATION.

INSTALL HYDRAULIC PUMP GASKET, PLUG, AND FITTING.

INSTALL RIGHT ANGLE DRIVE GASKET, PLUG, AND FITTING.

INSTALL OIL LEVEL PLUG AND DRAIN PLUGS.

AT 19697

Figure 3-57. Removal or installation of right-angle drive power take-off plugs, fittings, and gaskets.

CHAPTER 4
DIRECT SUPPORT, GENERAL SUPPORT AND DEPOT MAINTENANCE

Section I. GENERAL

4-1. Scope.

4-2. The following instructions are for direct support and general direct and depot maintenance personnel. They contain information on equipment maintenance that is beyond the scope of the tools, equipment, personnel, or supplies normally available to organizational maintenance.

4-3. Reports and Records.

4-4. For reports and records applicable to direct and general support and depot maintenance personnel, refer to TM 38-750.

Section II. DESCRIPTION AND DATA

4-5. Description and Data.

4-6. The description and data of bulldozer components are contained in the pertinent organizational maintenance section of this manual.

Section III. PARTS, SPECIAL TOOLS AND EQUIPMENT

4-7. General.

4.-8. Tool, equipment, and repair parts over and above those available to the using organization are supplied to maintenance units and depot shops for maintaining, repairing, and or rebuilding the bulldozer.

4-9. Repair Parts.

4-10. Maintenance repair parts are issued to supporting maintenance personnel for the replacement of parts which have become worn, broken, or otherwise unserviceable. Repair parts are listed in Appendix D which is authority for requisitioning replacements. Parts not listed, but are required in rebuild operations, may be requisitioned and will be supplied if available. Complete justification must accompany requisition. It is important that careful troubleshooting be used to determine what parts are to be replaced before component is torn down for repair.

4-11. Tools and Equipment.

a. Common. Standard and commonly used tools and equipment having general application to this material are authorized for issue by Table of Allowances and Tables of Organization and Equipment

b. Special. Special tools and equipment designed for direct support, general support and depot maintenance, repair, and general use with the material are listed in table 4-4, and illustrated in figure 4-1. Table 4-1 also contains references to paragraphs in the manual which describe the use of tools. Table 4-1 is not to be used for requisitioning replacements. Special tools for direct support, general support, and depot maintenance are listed in Appendix D, Which is the authority for requisitioning replacements.

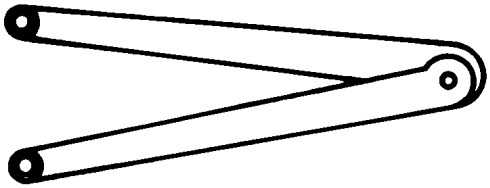

WRENCH, SPANNER 5120-293-0798

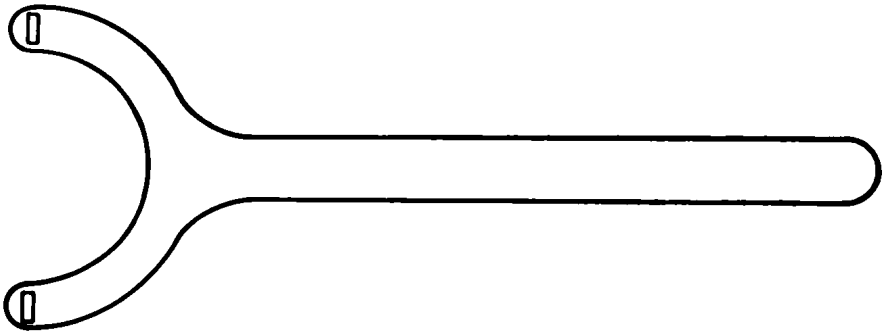

WRENCH, SPANNER 5120-907-9001

AT 19698

Figure 4-1. Special tools, and equipment for direct support, general support, and depot maintenance.

Table 4-1. Special Tool and Equipment - Direct support, General Support and Depot Maintenance

Item	***Identifying Number***	***References Fig. Para.***	***Use***
WRENCH, SPANNER Adjustable Face.	5120-293-0798 (96906-116146-2(	4-1	For removing and replacing retaining nut on magnetic clutch.
WRENCH, SPANNER	5120-907-9001 (10952095)	4-1	For removing and replacing retainer o f power take - off.

Section IV. TROUBLESHOOTING

4-12. General.

Note. This section provides a continuation of instructions where a remedy in the organizational maintenance refers to supporting maintenance personnel for corrective action.

4-13. Operation of a deadlined bulldozer without a preliminary examination can cause further damage to a disabled component and possible injury to personnel. By careful inspection and troubleshooting, such damage and injury can be avoided and, in addition, the cause of the faulty operation of the bulldozer component can often be determined without extensive disassembly.

4-14. Instructions and Procedures

a. This section contains inspection and

troubleshooting procedures to be perish p while a disabled component is still mounted on the vehicle and after it has been removed.

b. The inceptions made while the component is mounted on the vehicle are for the most part visual and are to be performed before attempting to operate the bulldozer. The object of these inceptions is to determine the condition of the component, and if found defective, to take precautions to prevent further damage.

c. Inspection after the component is removed from the vehicle is performed to verify the diagnosis made when the component was on the vehicle, to uncover further defects, or to determine malfunctions if the component alone is received from lower categories of maintenance. This inspection is particularly important in the last case because it is often the only means of determining the malfunction without completely disassembling the component.

4-15. Troubleshooting Technique.

4-16. Do not operate any power-actuated components in the vehicle prior to completing the procedures below. Careful manual operation, where applicable, may be performed to determine normal or abnormal functioning where indicated in the procedures.

4-17. Detail Procedure.

a. Inspect Appearance. The appearance of an assembly or component will indicate its general condition and will reflect the type of treatment it has received. Examine for dented surfaces, bent or broken lines or parts, fungicidal growth, moisture, corrosion, dirt or other foreign matter, wear, oil stains, bare wire, worn insulation, tampering, and other evidence of misuse which might indicate the source of trouble and the need for repairs.

b. Inspect Completeness. Check to see that all components are present and are properly mounted. Secure or replace as required.

c. Inspect Modifications. Check for the presence of unauthorized modifications, and be certain that authorized modifications have been incorporated.

d. Bleed System. Air in the hydraulic system can cause many malfunctions which might be falsely attributed to a system component Before troubleshooting the bulldozer hydraulic system, bleed the system to remove all air bubbles, and inspect condition of hydraulic lines. Replace all damaged lines. Refer to organizational maintenance section for instructions for bleeding the system.

e. Begin Troubleshooting. The troubleshooting procedures have been divided into several table. Start by checking out the operation of the system to locate the malfunction to a particular component When the faulty component has been determined, refer to the table which details the troubleshooting procedure for the faulty component, and proceed to isolate the probable cause of component malfunction. The component troubleshooting tables also contain malfunctions which may be evidenced by testing the component after it has been removed from the system. Often a faulty component will be returned for overhaul with no recorded indication of the malfunction which caused it to be removed from the system. In these cases, utilize only those portions of the component troubleshooting table which can be applied to a component not installed in a system.

4-18. Troubleshooting Procedures.

a. Moldboard Assembly Components. Refer to table 4-2.

b. Cylinder and Ram Assembly Components. *R*efer to table 4-3.

c. Ram Assembly Components. Refer to table 4-4.

d. Control Handle Box Assembly Components. Refer to table 4-5.

e. Electromagnetic Clutch Assembly Components Refer to table 4-6.

f. Power Take-Off Transmission Assembly Components. Refer to table 4-7.

Table 4-2. Troubleshooting Moldboard Assembly

Malfunction	Probable cause	Corrective action
Moldboard Assembly inoperative	a) Inner tilt arm assembly defective. b) Pushbeam assembly defective. c) Outer tilt arm assembly defective.	Repair/replace defective inner tilt arm assembly. Repair/ replace defective pushbeam assembly. Repair/ replace defective outer tilt arm assembly.

Table 4-3. Troubleshooting Cylinder and Ram Assemble

Malfunction	Probable cause	Corrective action
Left or right cylinder and ram assembly inoperative.	a) Cylinder assembly defective b) Piston assembly and piston rod. c) Hydraulic cylinder packing set defective. d) Hydraulic cylinder piston ring defective. e) Hydraulic cylinder ram assembly defective (see table 3-2). f) Hydraulic cylinder head oil seal ring defective. g) Hydraulic cylinder head defective. h) Hydraulic cylinder piston rod packing set defective . i) Hydraulic cylinder piston rod packing gland seal defective. j) Hydraulic cylinder piston rod packing gland defective.	Repair/replace defective cylinder assembly. Replace piston nut and cotter pin operated. Replace defective packing set. Replace defective cylinder piston ring. Repair/ replace defective hydraulic ram assembly. Replace defective oil seal ring. Replace defective cylinder head. Replace defective hydraulic cylinder piston rod packing set Replace defective piston rod packing gland seal Replace defective piston rod packing gland.

Table 4-4. Troubleshooting Ram Assembly

Malfunction	Probable cause	Corrective action
Hydraulic Cylinder Ram Assembly defective	a) Hydraulic cylinder piston rod defective b) Hydraulic cylinder piston rod head defective c) Hydraulic cylinder piston ram head bushing defective.	Replace hydraulic Cylinder ram assembly. Replace hydraulic cylinder ram assembly. Replace defective piston ram head bushing.

Table 4-5. Troubleshooting Control Handle Box Assembly

Malfunction	Probable cause	Corrective action
Control Handle Box Assembly defective	a) Box assembly defective	Repair/replace defective box assembly.

Table 4-6. Troubleshooting Electromagnetic Clutch Assembly (Power Take-off Group)

Malfunction	Probable cause	Corrective action
Electro Magnetic Clutch Assembly inoperative	a) Defective power takeoff transmission assembly (see table 3-6),	Repair/replace defective power take-off assembly.
	b) Defective sprocket assembly.	Repair/ replace defective sprocket assembly.
	c) Defective sprocket ring assembly.	Replace defective sprocket ring ring assembly.

Table 4-7. Troubleshooting Power Take-Off Transmission Assembly

Malfunction	Probable cause	Corrective action
Power Take-Off Transmission Assembly inoperative	a) Power take-off right drive assembly defective.	Repair/ replace defective right drive assembly.
	b) Hydraulic pump assembly defective.	Repair/ replace defective hydraulic pump assembly.
	c) Magnetic clutch defective.	Repair/replace defective clutch assembly.

Section V. General Maintenance Instructions

4-19. General.

4-20. This section provides general maintenance instructions for direct support, general support and depot maintenance personnel to maintain and various bulldozer components.

4-21. Cleaning.

4-22. All component pan of the various assemblies must be cleaned after disassembly. Make certain the work bench is free d foreign matter. Place a large piece of heavy wrapping paper on the work bench to insure cleanliness. This precaution will protect the highly finished surfaces and reduce the danger of misplacing small parts. During disassembly and assembly avoid striking highly finished surfaces together. General inspection and cleaning instructions for operator and organizational personnel are contained in paragraphs 3-27 and 3-28. For direct support, general support, and depot maintenance observe the following cleaning procedures.

a. Mechanical Parts.

(1) Cleaning methods. Material received in Ordnance shops from storage will be cleaned by one of the following methods, whichever is applicable and available. If some time is to elapse before the start of repair or rebuild operations, apply a light grade of preservative oil to all polished metal surfaces to prevent rusting.

(a) Dip-tank. Disassemble as required, place parts in a perforated metal basket, and submerge and agitate parts in a tank containing dry-cleaning solvent or mineral spirits paint thinner. Repeat, using a second tank containing clean solvent or paint thinner. Extent of treatment in each tank will depend on time needed to dissolve dirt, oil, and grease.

(b) Vapor-degreaser. Tanks containing a heated solution of trichloroethylene or perchlorothylene (type 11) are used mostly for degreasing items that are very greasy or oily and are not readily cleaned by the dip-tank method. Place parts in a perforated metal b-'et and submerge just below the vapors in the tank and keep there until all the grease or oil melts and runs off the parts

Warning: Personnel operating vapor-degreasers are cautioned not to inhale the vapor fumes.

(*c*) Steam. Place parts in a perforated metal basket and steam-treat until clean. This method is less efficient than the vapor-degreaser method and may require additional cleaning of parts to remove all traces of grease or oil, particularly from the recessed areas.

(2) Cleaning during repair and rebuild.

(*a*) Remove dirt and other foreign matter from all metal surfaces This can be done by the dip-tank method or vapor-degreaser method, or by cleaning with cloths soaked in dry-cleaning solvents or mineral spirits paint thinner. In the dip-tank method, agitation for approximately 1 minute in each tank is sufficient; in the vapor-degreaser method, treatment for about 2 to 3 minutes is sufficient.

(*b*) Foreign matter is more easily removed from recessed areas when the proper tools are used. A stiff bristled brush or a pointed wooden stick will serve well in this instance.

(3) Cleaning after shop inspection. After shop inspections, dip part in a tank containing fingerprint-removing oil (type A), remove (use rubber gloves), and dry thoroughly with dry compressed air provided with moisture filter traps) or by wiping with clean, lint-free, dry cloths. Apply preservative as soon as possible after cleaning.

b. Bearing Remove surface dirt, oil, or grease from any ball or needle bearing by one of the above methods, then place the bearings in hot oil (about 140'F) to loosen congealed oil or grease from the recessed areas. Dip and agitate the bearing in clean dry-cleaning solvent or mineral spirits paint thinner. Dry bearing thoroughly and coat it with a thin film of lubricant and wrap it tightly in oiled or waxed paper until ready for inspection or assembly.

Caution: Do not spin a bearing with compressed air. Refer to TM 9-214 for the care and maintenance of bearings.

c. Hydraulic Parts. Observe the procedures discussed in a. above. After assembly and before inspection, wash all hydraulic components thoroughly in dry-cleaning solvent or mineral spirits paint thinner. Dry the parts, except ball and roller bearings, with dry compressed air. Bearings, pistons, and other parts having sliding fits or close-running surfaces should be coated with OE-10 oil before assembly. Cleanliness plus care in handling or working parts, will reduce malfunctioning and increase the life of hydraulic components.

d. TM 9-208-1. For complete information in regard to cleaning of Ordnance material, refer to TM 9-208-1.

4-23. Inspection and Repair.

a. Inspection and Repair of Cast Parts and Machined Surfaces.

(1) Inspect cast parts for cracks or fractures, and inspect interiors for scores and burs.

(2) Inspect machined surfaces for cracks, fractures, and signs of galling, pitting, scoring, or corrosion.

(3) Remove minor scores and burs from machined surfaces and interiors of case parts with a fine stone or crocus cloth that has been dipped in dry-cleaning solvent or mineral spirits paint thinner. Replace part if it is cracked, fractured or excessively scored or burred.

b. Inspection and Repair of Bearings.

(1) Inspect all bearings in accordance with TM 9-214.

(2) Inspect ball for cracks, fractures, signs of pitting, or corrosion. Take several measurements of the diameter of each ball to check for roundness and proper diameter.

(3) Perform maintenance functions on bearings as prescribed in TM 9-214.

(4) Replace balls if they are damaged in any way.

c. Inspection and Repair of Bushing-Type Bearings.

(1) Inspect bearing for cracks, fractures, signs of galling, pitting, scoring, and corrosion.

***Note.* Inspection is to be accomplished without removing the bearing. Use a small mirror and pen-type flashlight where necessary.**

(2) Replace bearing if damaged in any way.

Caution: Note the position of the defective bearing within its housing so that the now bearing may be installed in the same manner.

d. Inspection and Replacement of "O" Rings.

(1) Inspection. Rubber "0" rings are generally replaced when removed from their sealing surfaces.

(2) Replacement. To facilitate installation, apply a film of grease to "O" rings that are used for sealing or waterproofing housings, clutches, pumps, etc.

Apply a film of hydraulic fluid to rubber "O" rings to facilitate their installation in the grooves of hydraulic pressure piston, plungers, and spools. When ,handing and installing "0" rings, exercise care to avoid cutting or nicking them. A cut or nicked "O" ring may result in a leak and subsequent equipment failure.

e. Inspection of Gaskets. Inspect gaskets for breaks, cracks, and deterioration. Tag damaged gaskets for replacement.

f. Inspection and Replacement of Cushioning Material.

(1) Inspection. Inspect cushioning material for punctures, breaks, cracks, and deterioration.
Check for evidence f separation between parts joined with synthetic rubber adhesive.

(2) Replacement. Tag damaged parts for replacement. Replace parts bonded with synthetic rubber adhesive 8040664318 as follows.

(*a*) Remove damaged cushioning material (also cemented seal or gaskets) for associated component.

(b) If necessary, roughen metal surfaces. Remove any paint from surfaces to be bonded.

Warning: Work area should be well ventilated to reduce toxic concentration of solvent fumes.

(*c*) Remove oil, grease, moisture, or other contaminants by cleaning the use with a cloth soaked in solvent aromatic petroleum naphtha, 50 percent grade B. Handle clean parts in a manner to insure cleanliness and keep parts free d fingerprints.

Warning: Avoid smoking in the work area. Adhesive is highly flammable .

Note. **Cementing should be accomplished at room temperature of at least 65° F. Do not use tape to hold parts together temporarily during bonding process.**

(*d)* Using a brush, or suitable applicator, apply a thin coat of adhesive 8040-664-4318 to both of the surfaces to be bonded. Allow adhesive to set for about 15 minutes before joining the parts, and from 30 minutes to 24 hours before placing the cemented parts use.

g. Inspection and Repair of Gem.

(1) Inspect gears for wear, nicks, flaking, scoring, and burring. Check that gears are secure on the draft or component part on which they have been shrunk or pressed.

(2) Remove minor nicks with a fine stone or crocus cloth that has been dipped in dry-cleaning solvent or mineral spirits paint thinner. Replace gears if teeth exhibit any other type of damage.

h. Inspection and Repair d Shafts and Splined Part.

(1) Inspect shafts for cracks, fractures, scores, and deformation. Remove minor nicks with a fine tone o crocus cloth dipped in dry cleaner solvent mineral spirits paint thinner.

(2) Replace shafts if they are cracked fractured, and or deformed.

(3) Inspect splines for cracks, fractures, and deformation. Remove minor nicks with a fine tone or crocus cloth in the same manner a for shafts in (1) above.

(4) Replace any splined item if splines do not permit a secure fit.

i. Inspection and Repair of Threaded Parts.

(1)I Inspect all screws bolts, nuts, threaded holes, and all parts with internal and / or external.

(2) Repair damage to continuous-type by chasing with a suitable size tap or die.

j. Inspection of Snap Ring.

(1) Inspect snap ring for damage that would impair their use.

(2) Replace snap rings if damaged.

k. Dowel Pin Removal If necessary, remove dowel pins by one d the following methods

(1) Grip pin with self-locking pliers and pull with a twisting motion.

(2) Grind pin off flush with surfaces, and drill out remainder d pin with suitable size drill.

l. Stud Removal If necessary, remove studs by one of the following method.

(1) Apply penetrating oil to base of stud. Thread two hex nuts of proper size on the stud, then jam the nut. Tap head stud sharply several times with a hammer. Apply suitable wrench to lower of the two hex nuts and -now stud.

(2) Apply penetrating oil to base of stud and tap head d stud sharply several times with a hammer. Grip stud with self-locking pliers and unscrew.

(3) Grind stud off flush with surface, and drill out reminder of stud with suitable size drill.

m. Inspection of Welds. Inspect all weldments broken or defective welds.

n. Inspection and Repair of Finish.

(1) Inspect all painted surfaces in accordance with TM 9-213.

(2) Inspect painted surface for signs of flaking, wear, or deterioration of the plating.

(3) Repaint all painted surfaces, where required, as prescribed in TM 9-213.

o. Electrical or Electronic Components Inspection.

(1) Connectors. Inspect connector bodies for broken parts, deformed shells or clamps. Inspect for corroded, poorly soldered, loose, or broken terminal connections. Inspect for contacts that are broken, deformed or out of alinement.

(2) Switches. Perform continuity check to ensure proper operation of switch. Check that switch rotates or moves properly without binding. Inspect for proper soldering.

(3) Soldered Terminal Connection.

(a) Inspect for an improper soldered connection such as cold-solder and / or rosin joint. These joints are either porous or dull in appearance. Check for a firm bond using a pointed tool.

(b) Check for excessive solder, pieces protruding from joints and particles between points or other parts.

(c) Examine soldered joints for insufficient solder and unsoldered strands of wire protruding from components at soldered joint.

(4) Relays and Circuit Breakers. Check for corroded, poorly soldered, or loose terminals and loose, broken, or missing hardware. Check all parts for signs of excessive heating, physical damage to case, cracked and broken insulators and other irregularities.

(5) Wiring. Check insulation tubing and sleeves for physical damage breakage, charring, or evidence of melted insulation. Inspect for proper insulation in relation to adjacent wiring.

p. Inspection of Clevis, Pins, and Connecting Rods

(1) Inspect clevis for cracks, deformation, scoring, and burs. Remove minor scores and burs

(2) Inspect straight pins subject to motion in large clearance fit for scoring, deformation, burs or corrosion. Remove minor scores and burs

(3) Inspect rod end bearings for freedom of rotation, corrosion and scoring

(4) Replace clevis or pins if inspection determines 'part will impair operation (excessive play or erratic motion), or cause fracture of the mechanism.

(5) Replace rod end bearings if freedom of rotation if impaired.

q. Metal Pickup.

(1) Inspect bearing and moving metal parts for metal pickup.

(2) Remove metal pickup with fine stone or crocus cloth that has been dipped in dry-cleaning solvent or mineral spirits paint thinner.

(3) Replace part if metal pickup cannot be removed.

(4) Bearing may need replacing if metal pickup has damaged them.

Section VI. HEADLIGHT ADAPTER ASSEMBLY

4-24. General.

4-25. The headlight adapter assemblies are mounted on the front of the hull. The adapter elevates the headlight cluster above the height of the moldboard to facilitate light projection when moldboard is in raised position.

4-26. Headlight Adapter Assembly.

a. Removal and Installation.

(1) Refer to headlight and adapter replacement (par. 3-60).

(2) Refer to figure 3-19 for removal and installation.

b. Disassembly. To disassemble the adapter assembly, refer to figure 4-2 and proceed follows.

(1) Turn adapter assembly with base (21) down.

(2) Remove seven pins (1) and insert (2).

(3) Remove three screws (3), washers (4), lockwashers (6), and nuts (7)securing holder (13) to adapter (10).

(4) Remove rivet (14), nut 412), ring (11) and gasket (5) from adapter.

(5) Invert the adapter assembly and remove seven sockets (25), insert (24) and gasket (26).

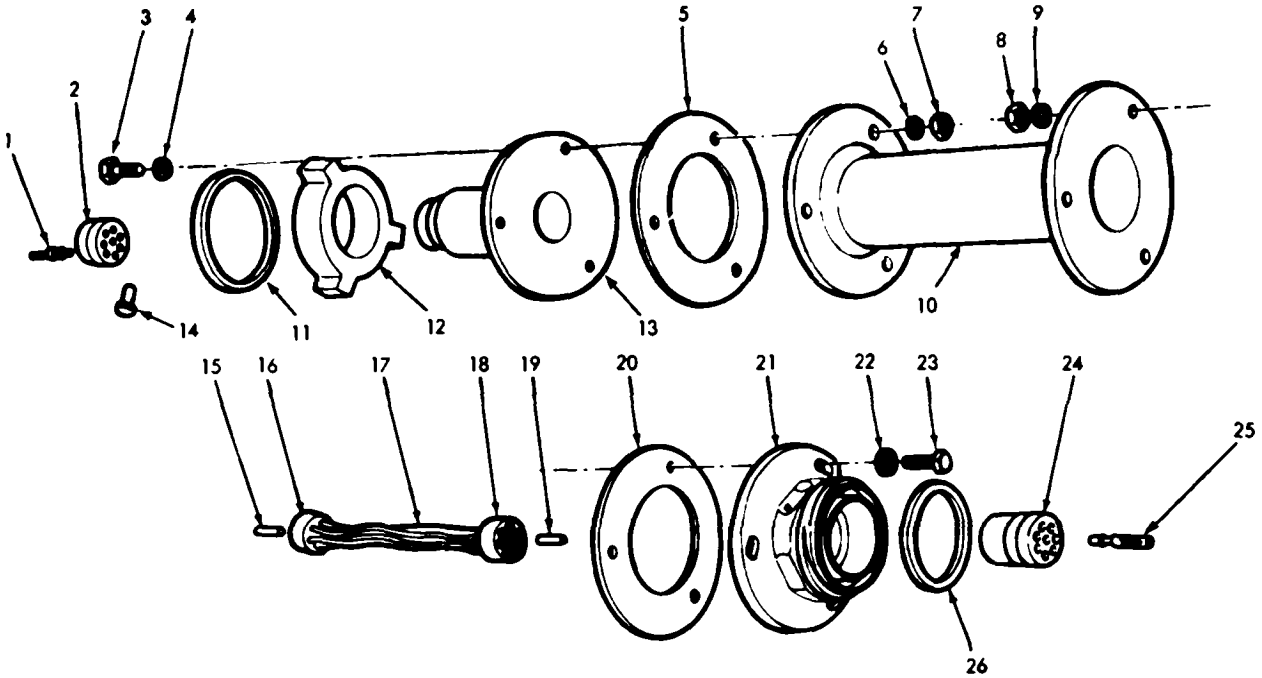

*PART OF BASE ASSEMBLY

LEGEND

1 - PIN (7)*	9 - LOCKWASHER (3)	18 - GROMMET*
2 - INSERT	10 - ADAPTER	19 - ROD*
3 - SCREW (3)	11 - RING	20 - GASKET
4 - WASHER (3)	12 - NUT	21 - BASE*
5 - GASKET	13 - HOLDER	22 - WASHER (3)
6 - LOCKWASHER (3)	14 - RIVET	23 - SCREW (3)
7 - NUT (3)	15 - ROD	24 - INSERT*
8 - NUT (3)	16 - GROMMET	25 - SOCKET*
	17 - CABLE*	26 - GASKET*

AT 19699

Figure 4-2. Disassembly or assembly of headlight adapter assembly.

(6) Remove three screws (23), washers (22), lockwashers (9) and nuts (8) securing base (21) to adapter (10).

(7) Remove gasket (20).

(8) Remove cable (1/) from adapter (10).

(9) Remove grommets (16) and rods (15) from cable.

c. Inspection. Inspect the components of adapter assembly as directed in paragraph 4-23.

d. Cleaning. Refer to paragraph 4.21 for cleaning instruction.

e. Assembly. To assemble the adapter assembly, refer to figure 4-2 and proceed as follows.

(1) Install grommets (6) and rods (15) in cable (17).

(2) Install cable into adapter (10).

(3) Install gasket (20) on adapter.

(4) Place base (21) on gasket and adapter and secure with three with (23), washers (22), lockwashers (9) and nuts (8).

(5) Install gasket (26), inert (24) and seven sockets (25) into cable (17).

(6) Invert the adapter assembly.

(7) Assemble gasket (5), ring (11), nut (12) rivet (14), and holder (13) on adapter and s: cure with three secure (3), washers (4), lockwasher (6) and nuts (7).

(8) Install insert (2)and seven pins (1).

Section VII. MOLDBOARD CYLINDER AND RAM

4-27. General.

4-28. Refer to organizational maintenance section for description and operation of the moldboard cylinder and ram assemblies.

4-29. Moldboard Cylinder end Ram.

a. Removal and Installation.

(1) Refer to hydraulic cylinder and ram assembly replacement (par. 3-76).

(2) Refer to figure 3-35 for removal and installation.

b. Disassembly. To disassemble the moldboard cylinder and ram, refer to figure 4-3 and proceed as follows.

(1) Remove eight screws and washers (15 and 14) from cylinder head (13).

(2) Slide cylinder (4) from piston assembly.

(3) Remove ring (12) from grove in cylinder (4).

(4) Remove cotter pin (5) from nut (6) and remove nut (6) from piston rod (21).

(5) Remove piston (8) from piston rod (21).

(6) Separate piston ring (7) from piston (8).

(7) Remove packing set (9) from piston (10).

(8) Slide piston (10) from piston rod (21). bulldozer will be placed in administrative storage storms, wind storms, or other severe weather

(9) Remove washer (11) from piston rod (21).

(10) Slide piston rod (21) from cylinder head (13).

(11) Remove seal (16) from packing gland (17).

(12) Cut lockwire (20) and remove two screws (19) from cylinder head (13).

(13) Remove pacing gland (17) and packing set (18) from cylinder head (13).

(14) Remove threaded ram head (22) from piston rod (21).

(15) Drive bushing (23) from ram head (22).

c. Cleaning. Refer to paragraph 4-21 for cleaning instructions.

d. Inspection. Check the components for wear limit as specified in table 4-8.

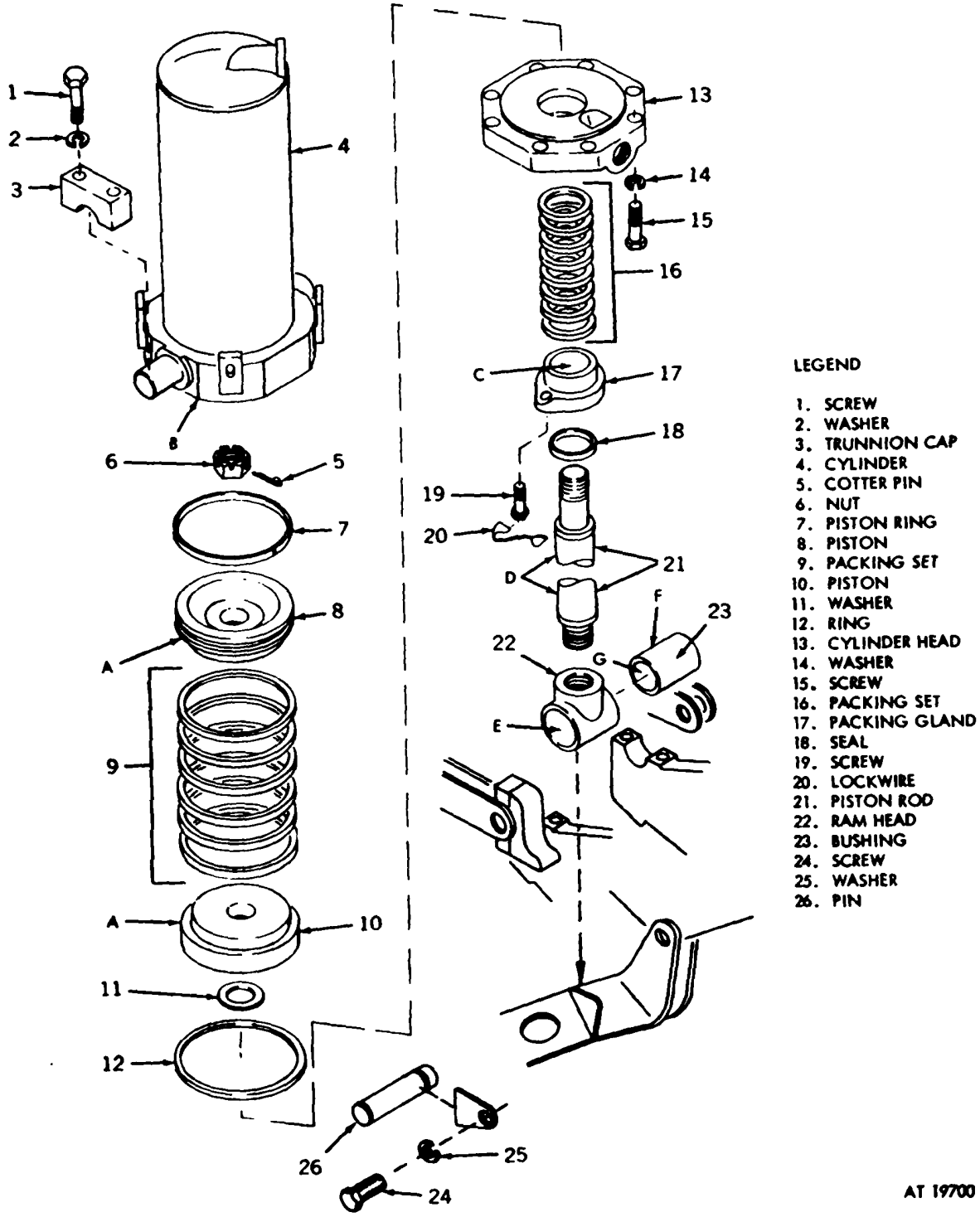

Figure 4-3. Disassembly or assembly of moldboard cylinder and ram.

Table 4-8. Repair and Rebuild Standards for Moldboard Cylinder and Ram

Figure Number	***Refer-ance Letter***	***Point of Measurement***	***Size and Fit of New Parts***	***Wear Limits***	
				Direct & General Support	***Depot Support***
4-3	A	OD of piston	6.975 to 6.985	(*)	(*)
4-3	B	ID of cylinder bore	7.015 to 7.020	(*)	(*)
4-3	A-B	Fit of piston in cylinder	0.030L to 4.045L	(*)	(*)
4-3	C	ID of packing gland	2.503 to 2.506	(*)	(*)
4-3	D	OD of piston rod	2.498 to 2.501	(*)	(*)
4-3	C-D	Fit of piston rod in gland	0.002L to 0.008L	(*)	(*)
4-3	E	ID of ram head bore	2.375 to 2.376	(*)	(*)
4-3	F	OD of bushing	2.377 to 3.379	(*)	(*)
4-3	E-F	Fit of bushing in ram	0.001T to 0.004T	(*)	(*)
4-3	G	ID of bushing	2.003 to 2.005	2.010	2.008

e. Assembly. During assembly, replace packing set, seals, and/or all worn or deformed parts. To assemble the moldboard cylinder and ram, refer to figure 4-3 and proceed as follows.

(1) Install bushing (23) in run head (22).

(2) Connect threaded ram head (22) to piston rod (21).

(3) Install packing set 116) into internal bore of cylinder head (13).

(4) Using two screws (191, secure packing gland (17) to cylinder head (13). Secure screws (19) with lockwire (20).

(5) Install seal (18) in packing gland (17).

(6) Slide piston rod (21) into cylinder head (13) bore.

(7) Slide washer (11) over piston rod 121).

(8) Install piston (101 on piston rod (21).

(9) Install packing set (91 on piston (10).

(10) Install piston ring (17) on piston (8). Install piston (8) on piston rod (21) to mate with packing set 19).

(11) Install nut (6) on piston rod (21) and install cotter pin (5).

(12) Install ring (12) in groove in cylinder (4).

(13) Slide piston assembly into cylinder (4).

(14) Install eight washers and screws (15 and 14) to secure cylinder head (13) to cylinder (4).

f. Test. To test the hydraulic cylinder and ram, proceed as follows.

(1) Connect a test arrangement to the cylinder as shown in figure 4-4.

(2) Cycle the hydraulic cylinder through its full stroke at least five (5) times by applying pressure alternately to port A and B. There shall be no exterior leakage. Linkage past the rod seals during cycling test shall not form one (1) drop.

(3) Apply pressure at port B and retract the cylinder to its minimum length and then disconnect the line at port A. Apply 1000 $\pm$ 50 psi at port B and observe for leakage at port A. This leakage shall not exceed three (3) cubic inches per minute during the fifth minute of a five-minute pressure test period. There shall be no rod seal leakage or exterior leakage.

Section VIII. POWER TAKE-OFF ASSEMBLY

4-30. General.

4-31. Refer to organizational maintenance section for description and operation of the power take-off assembly.

4-32. Hydraulic Pump Assembly. The hydraulic pump,-assembly is mounted in the vehicle as an integral part of the pump and drive assembly (pump, magnetic clutch, and right-angle drive).

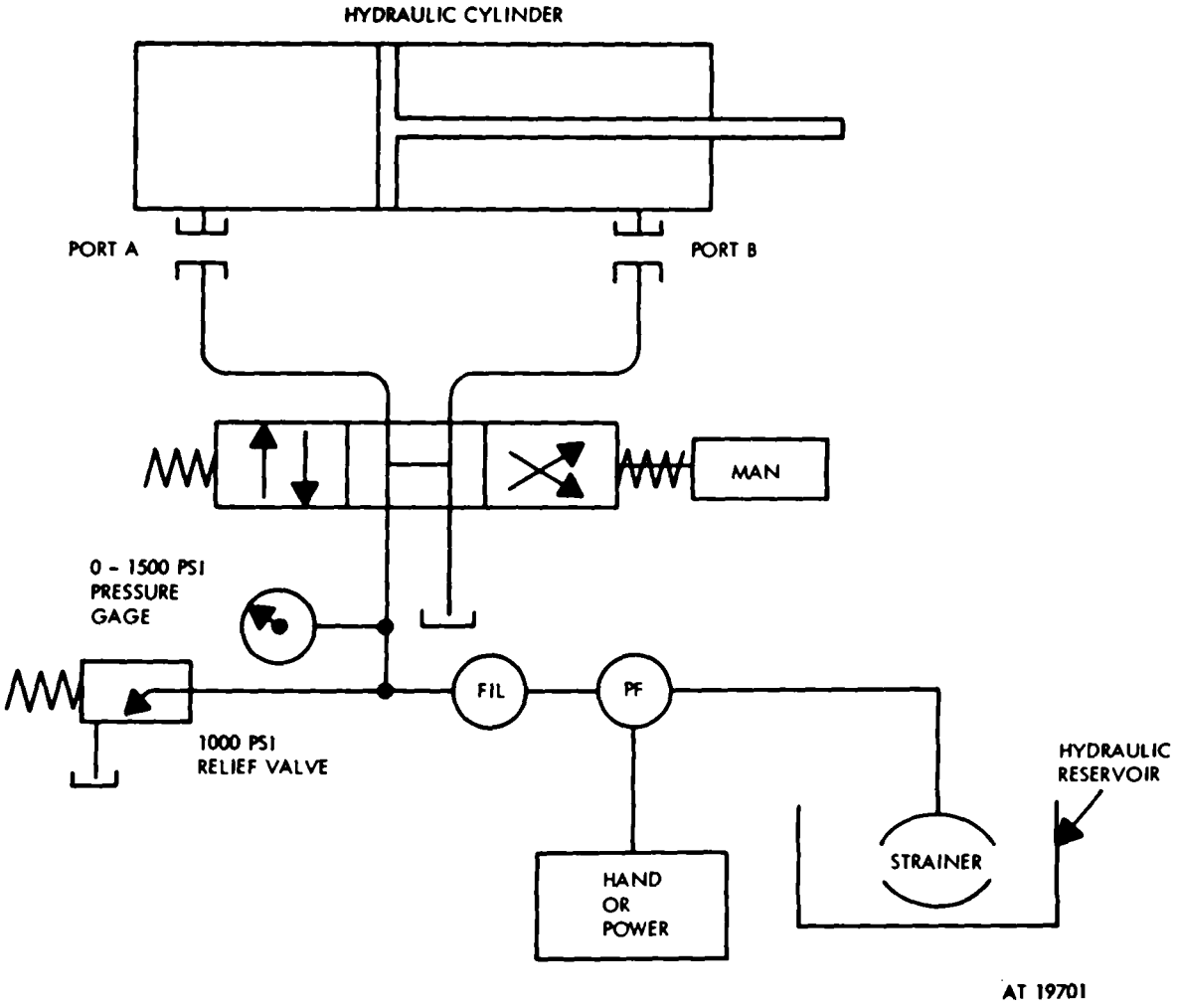

Figure 4-4. Testing arrangements for hydraulic cylinder and ram.

a. Removal and Installation. Refer to figure 4-5 through 4-7 for instructions on removal and installation of the complete unit. Follow the alphabetical sequence of views for removal and the numerical sequence of views for installation. Refer to figure 4-8 for disassembly and assembly of the pump assembly from/to the magnetic clutch and right-angle drive assembly.

Caution: Relieve main hydraulic system pressure before relieving hydraulic subsystem pressure.

b. Disassembly. To disassemble the hydraulic

pump assembly, refer to figure 4-9 and proceed as follows.

Note: **Use a prick punch and mark both sides of the pump housing and the two covers so that they can be assembled in the original position.**

(1) Turn the pump with end cover (15) down.

(2) Remove four screws (9) which attach the two covers (13 and 15) to the pump housing (14).

(3) Remove the front cover (13), packing (10) and gasket (8).

(4) Mark the wear plate (6) with blue aniline dye to insure proper assembly, and lift it off the gears.

(5) Mark the tops of the two gears (5 and 11) with blue aniline dye to insure proper assembly.

(6) Remove the drive gear (11).

(7) Lift the pump housing off the end covet (15).

(8) Mark the wear plate (6) remaining on top of the end cover with blue aniline dye to insure proper assembly.

(9) Invert the cover and remove the snap ring (1) from the outer end of the drive gear (5).

(10) Tap the shaft of drive gear (5) with a raw hide mallet and remove the gear and wear plate from the end cover (15).

(11) Remove the plain seat (12), retaining ring (3), bearing (4) and wear plate (6) from the drive gear shaft.

(12) Remove oil seal sat (2).

c. Cleaning. Refer to paragraph 4-21 for cleaning instructions.

PRELIMINARY PROCEDURE:
OPEN REAR GRILLE DOORS AND REMOVE TRANSMISSION SHROUD (TM9-2350-224-20).
DRAIN HYDRAULIC SYSTEM (FIGS 3- 21 AND 3-22).
DISCONNECT HYDRAULIC TUBE ASSEMBLIES FROM PUMP (FIG. 3-27).

A

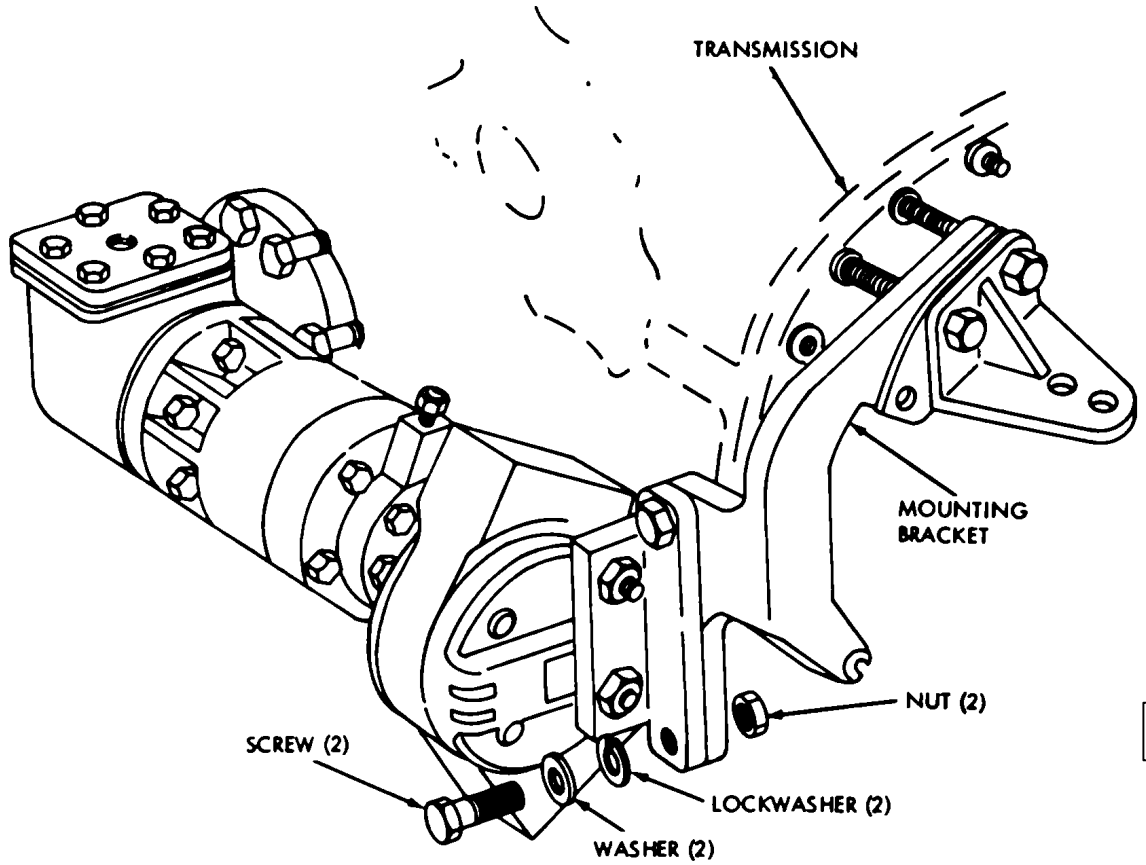

3

REMOVE / INSTALL TOW (2) SCREWS, LOCKWASHERS, WASHERS, AND NUTS SECURING HYDRAULIC PUMP MOUNTING BRACKET FROM / TO TRANSMISSION MOUNTING BRACKET.

AT19702

Figure 4-5. Removal or installation of hydraulic pump and drive assembly (sheet 1 of 3).

B

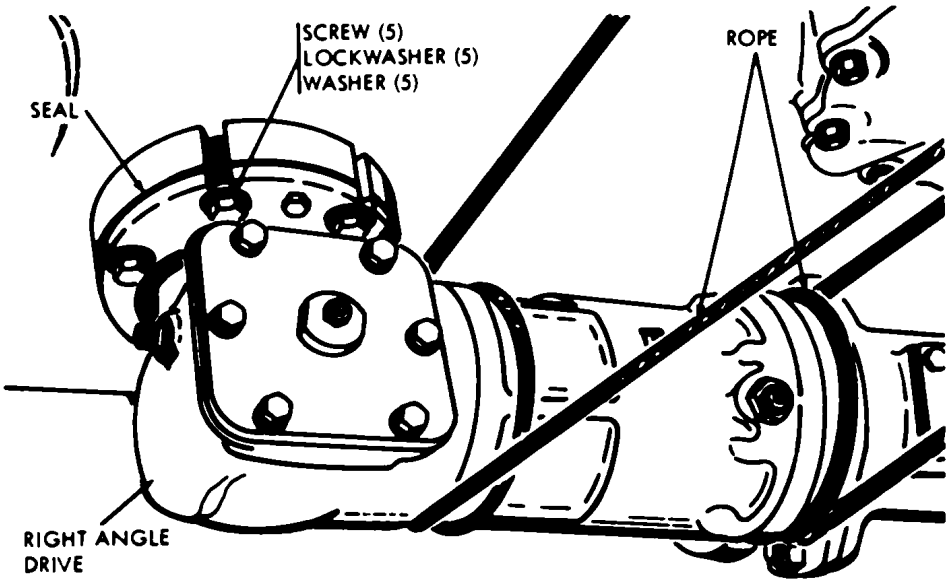

2

REMOVAL:

INSTALL ROPE AND ATTACH TO SUITABLE HOIST (MINIMUM CAPACITY OF 250 LBS), AND APPLY LIFT TO SUPPORT WEIGHT OF UNIT (TENSION ON ROPE).

REMOVE FIVE SCREWS, LOCKWASHERS AND WASHERS SECURING RIGHT ANGLE DRIVE END OF UNIT TO TRANSMISSION.

PULL UNIT AWAY FROM TRANSMISSION TO DISENGAGE DRIVE FROM DRIVE SPROCKET IN TRANSMISSION.

APPLY LIFT WITH HOIST TO REMOVE PUMP AND DRIVE UNIT, FROM VEHICLE.

INSTALLATION: INSTALL ROPE AND ATTACH TO SUITABLE HOIST (MINIMUM CAPACITY OF 250 LBS), AND LIFT PUMP AND DRIVE UNIT INTO POSITION. (PUMP BRACKET RESTING ON TRANSMISSION BRACKET AND RIGHT ANGLE DRIVE ALINED WITH DRIVE SPROCKET OPENING ON TRANSMISSION.)

INSTALL NEW GASKET BETWEEN DRIVE UNIT AND SPACER ON TRANSMISSION.

START ONE OF FIVE ATTACHING SCREWS, LOCKWASHER AND WASHER WHICH SECURE UNIT TO TRANSMISSION.

MANIPULATE PUMP AND DRIVE UNIT SO THAT PINION SPLINE IN UNIT ENGAGES WITH INTERNAL SPLINE OF DRIVE SPROCKET IN TRANSMISSION.

INSTALL REMAINING FOUR SCREWS, WASHERS AND LOCKWASHERS TO SECURE RIGHT ANGLE DRIVE END OF UNIT TO TRANSMISSION. ASSURE THAT MOUNTING HOLES IN PUMP BRACKET ARE ALINED WITH HOLES ON TRANSMISSION BRACKET. (VIEW A) REMOVE ROPE.

AT 19703

Figure 4-6. Removal or installation of hydraulic pump and drive assembly (sheet 2 of 3).

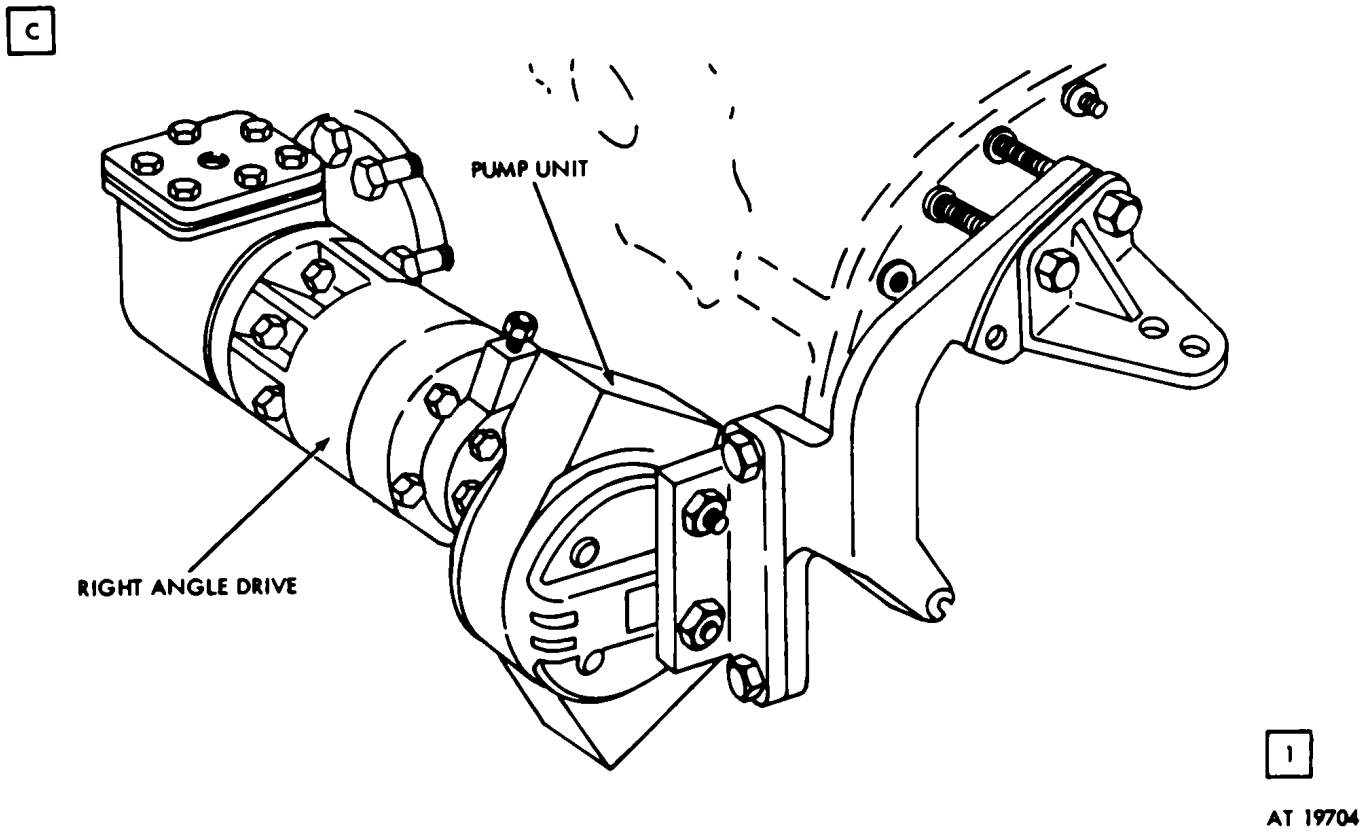

Figure 4-7. Removal or installation of hydraulic pump and drive assembly (sheet 3 of 3).

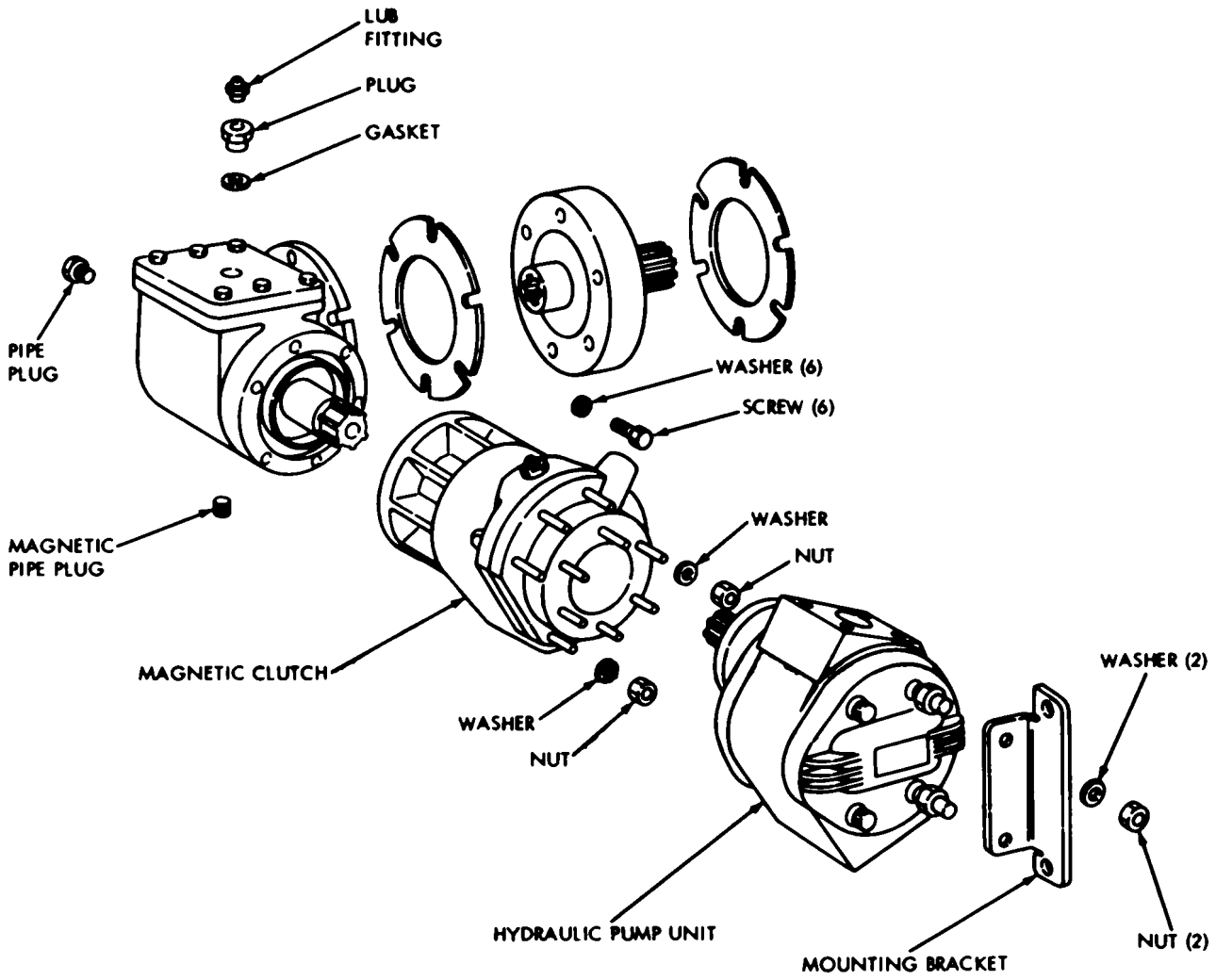

HYDRAULIC PUMP UNIT:

REMOVE/INSTALL NUTS AND LOCKWASHERS SECURING PUMP UNIT TO MAGNETIC CLUTCH; REMOVE/POSITION PUMP FROM/IN CLUTCH.

REMOVE/INSTALL TWO NUTS AND LOCKWASHERS SECURING MOUNTING BRACKET TO PUMP; REMOVE/POSITION BRACKET.

RIGHT ANGLE DRIVE:

REMOVE/INSTALL PUMP AND CLUTCH UNITS. USE A 3/8-INCH SOCKET WRENCH WITHIN CLUTCH HOUSING TO REMOVE/INSTALL SCREW AND LOCKWASHER SECURING SPIDER TO DRIVE GEAR; REMOVE/INSERT SPIDER FROM/IN CLUTCH HOUSING.

REMOVE/INSTALL SIX SCREWS AND LOCKWASHERS SECURING CLUTCH HOUSING TO RIGHT ANGLE DRIVE.

REMOVE/INSERT RIGHT ANGLE DRIVE FROM/INTO CLUTCH HOUSING.

AT 19705

Figure 4-8. Disassembly or assembly of hydraulic pump and drive assembly.

d. Inspection. Check the components for wear limits as specified in table 4-9.

Table 4-9. Repair and Rebuild Standards for Hydraulic Pump Assembly

Figure Number	***Refer-ence Letter***	***Point Measurement***	***Size and Fit of New Parts***	***Wire Limits***	
				Direct & General Support	***Depot***
4-9	A	Width d gears	2.5000 to 2.5005	2.499	(*)
4-9	B	OD of gear shaft	0.9990 to 0.9995	0.9980	(*)
4-9	C	Thickness of wear plate (after grinding)	0.248 to 0.250	0.246	(*)
4-9	D	OD of bearing	1.6870 to 1.6875	(*)	(*)
4-9	E	ID of bearing	1.0000 to 1.0005	(*)	(*)
4-9	B-E	Fit of shaft in bearing	0.0005L to 0.0015L	(*)	(*)
4-9	F	ID of recess in bearing	1.6865 to 1.6870	(*)	(*)
4-9	D-F	Fit of bearing in recess	0.000 to 0.001T	(*)	(*)

f. Assembly. During assembly, replace packing, seal, and/or all worn or all worn or damaged parts. To assemble the hydraulic pump assembly, refer to figure 4-9 and proceed follows.

Note. **There are f our bearing to be installed. All but the drive gear bearing 4) in the end cover 5 are installed in the same manner*.***

(1) Place one bearing 4) at top of each bore and aline carefully with the bore.

(2) Press the bearing into the bore until firmly seated.

(3) Install wear plate (6) removed from the end cover (15) on the drive gear shaft.

***Note*.** **Wear plate can be identified and properly installed by noting the dye marks made during disassembly.**

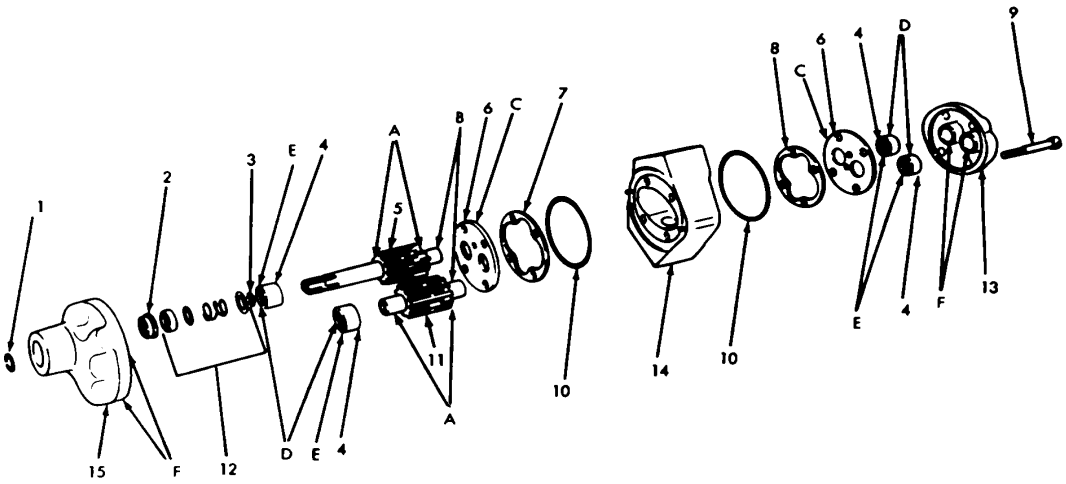

LEGEND

1. - RING
2. - SEAT
3. - RING RETAINING
4. - BEARING BALL ANNULAR
5. - GEAR
6. - WEAR PLATE
7. - GASKET
8. - GASKET
9. - BOLT
10. - PACKING PREFORMED
11. - GEAR SPUR
12. - SEAT PLAIN
13. - COVER, FRONT
14. - HOUSING
15. - COVER, END

AT 19706

Figure 4-9. Disassembly or assembly of hydraulic pump assembly.

(4) Install the remaining bearing (4) on the drive gear shaft

(5) Install the retaining ring (3) securing the bearing on the drive gear draft.

(6) Install the plain seat (12) and oil seal seat (2l on the drive gear assembly with the tapped surface of the seat facing up.

(7) Turn the end cover (15) with the small opening down and install drive gear shaft (5) into its bore in the end cover, and secure with snap ring (1).

(8) Position the drive gear (11) so that it will mate with the drive gear (5) in accordance with dye marks made during disassembly and insert the drive gear into its bore in the end cover.

(9) Place packing (10) on the machined surface of the end cover (15).

(10) Lower housing (14) into the end cover, position it in accordance with punch marks ma during disassembly. Locate housing over the dowel pins in the cover and seat firmly.

Note. **The drive gear shaft will stand up approximately one-quarter of an inch above the driven gear shaft due to the oil seal spring. When the spring is compressed during installation of the opposite end cover the gap will be eliminated.**

(11) Hold a straightedge diametrically across the top of housing (14) so that it touches the housing at each side of the drive gear (11) and at the same time presses over the driven gear. Measure the clearance between the straightedge and the driven gear with a feeler gage. This clearance should be 0.000 to 0.002 inch.

(12) Add or remove gaskets as required to obtain this clearance.

(13) Place the wear plate (6) (face down) on the housing (14), alining it in accordance with dye marks made during disassembly.

(14) Place packing (10) on the machined surface of the front cover (13). Install four screws (9) and tighten screws with a torque wrench to 90 to 110 foot-pounds torque.

(15) Rotate drive gear shaft. If it cannot be rotated readily by hand, remove front cover (13) and install another gasket (8) between cover and housing. Repeat until driven gear shaft can be freely rotated by hand.

4-33. Right-Angle Drive. The right-angle drive is mounted in the vehicle as an integral part of the pump and drive assembly (pump, magnetic clutch, and right-angle drive).

a. Removal and Installation. Refer to figure 4-5 through 4-7 for instructions on removal and installation of the complete unit. Follow the alphabetical sequence of view for removal and the numerical sequence of views for installation. Refer to figure 4-8 for disassembly and assembly of the pump assembly from/to the magnetic clutch and right-angle drive.

b. Disassembly. To disassemble the right-angle drive power take-off, refer to figures 4-10 and 4-11 and proceed as follows.

(1) Remove drain plug (17) and plug (15) from housing (7) and drain lubricating oil from the assembly.

(2) Remove plug (11) from fitting (12) and remove fitting (12) and gasket (13) from plate (14).

(3) Remove six screws and washers (10 and 9) securing plate (14) to housing (7). Remove plate (14) and gasket (8).

(4) Remove threaded retainer assembly (2) from housing (7).

(5) Disconnect retaining ring (1) from gear and remove gear (5) from retainer assembly (2).

(6) Remove bearing (6) from housing (7). Bearing (6) is premed into housing (7).

(7) Disconnect retaining ring (4) from retainer assembly (2) and remove bearing (3).

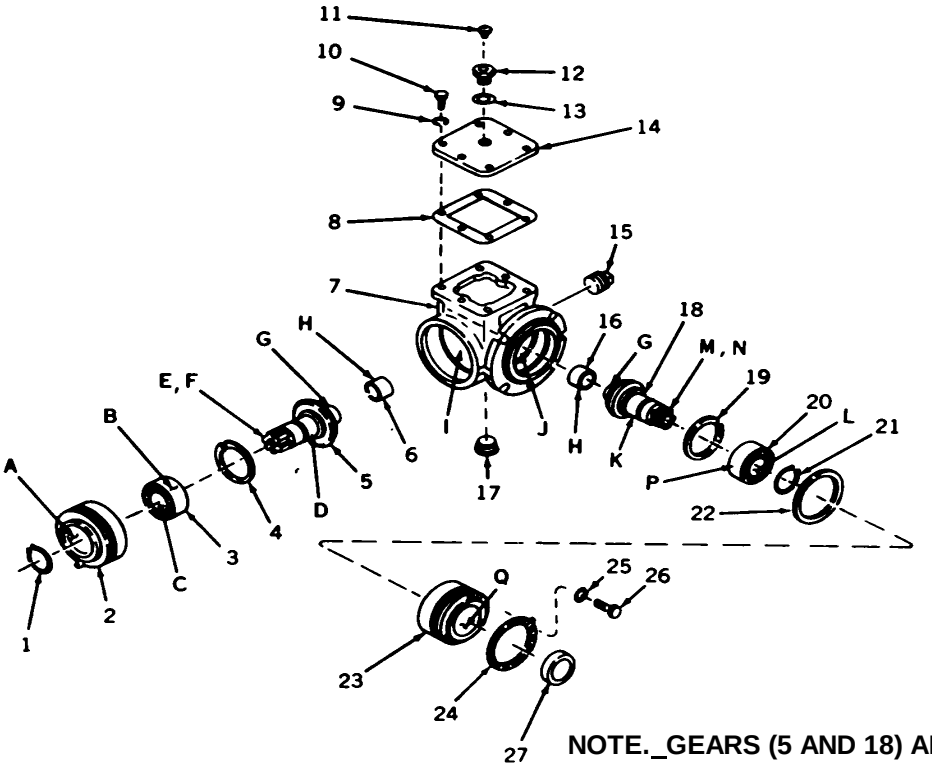

NOTE._GEARS (5 AND 18) ARE MATCHED PAIR: REPLACE AS SET.

LEGEND

1. RETAINING RING
2. RETAINER ASSEMBLY
3. BEARING
4. RETAINING RING
5. GEAR
6. BEARING
7. HOUSING
8. GASKET
9. WASHER
10 SCREW
11. PLUG
12. FITTING
13. GASKET
14. PLATE
15. PLUG
16. BEARING
17. DRAIN PLUG
18. DRIVE GEAR
19. RETAINING RING
20. BEARING
21. RETAINING RING
22. PACKING
23. RETAINER
24. LOCK RING
25. WASHER
26. SCREW
27. SEAL

AT 19707

Figure 4-10. Disassembly or assembly of right-angle drive power takeoff.

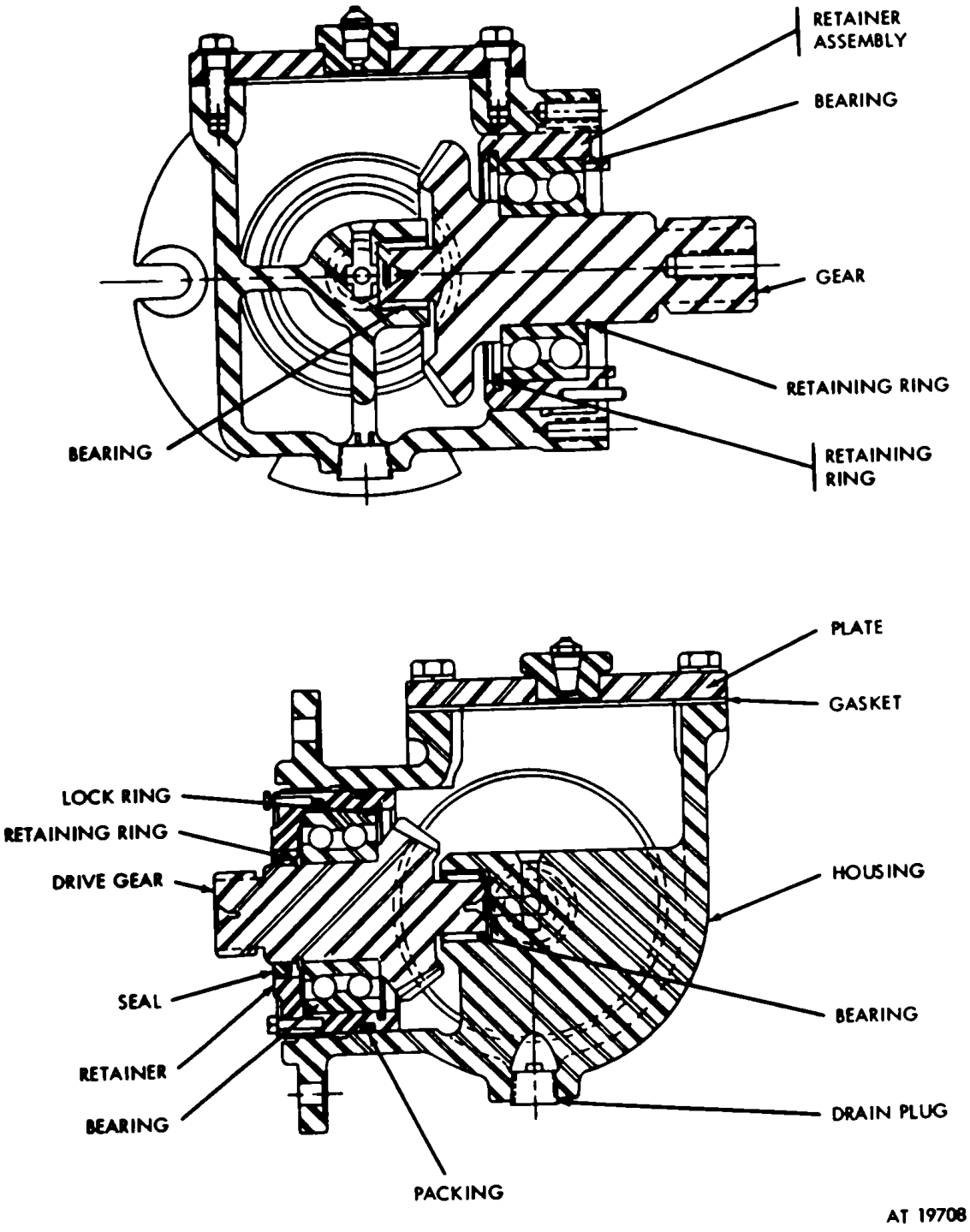

Figure 4-11. Right-angle drive power take-off- cutaway view.

(8) Remove twos screws and washers (25 and 24) securing lock ring (24) to retainer (23) and remove lock ring (24).

(9) Using spanner wrench 5120-907-9001, remove threaded retainer (23) from housing (7). Remove packing 122) from retainer (23).

(10) Remove seal (27) from retainer (23) and disconnect retaining ring (21) from drive gear (18).

(11) Slide drive gear (18) from retainer (23) and remove bearing 116) from drive gear (18).

(12) Disconnect retaining ring (19) from retainer (23) and remove bearing (20).

c. Cleaning. Refer to paragraph 4-21 for cleaning instructions.

d. Inspection. Check the components for wear limits a specified in table 4-10.

e. Assembly. During assembly, replace pecking sets, seas and/or all worn or deformed parts. To assemble the right-angle drive power take-off, refer to figures 4-10 and 4-11 and proceed as follows.

(1) Install oil seal (27) into bore of retainer (23).

(2) Install packing (22) in recess of retainer (23).

(3) Press bearing (20) over shaft of drive gear (18) and secure with retaining ring (21).

(4) Slide drive gear (18), with bearing (20) attached, into bore of retainer (23) and secure with retaining ring (19).

(5) Press bearing (16) into housing (7).

Using spanner wrench 5120-907-9001, screw threaded retainer (23) into bore of housing (7).

Note. **Refer to paragraph f. below for adjustment procedure prior to assembly.**

(6) Position lock ring (24) on retainer (23) and secure with two washers and screws (26 and 25).

Table 4-10. Repair and Rebuild Standards for Right-Angle Drive Power Take-off

Figure Number	***Reference Letter***	***Point Measurement***	***Size and Fit of New Parts***	***Wire Limits***	
				Direct & General Support	***Depot***
4-10	A	ID of retainer bore for bearing	3.1495 to 3.1501	(*)	(*)
4-10	B	OD of bearing	3 1491 to 3.1496	(*)	(*)
4-10	A-B	Fit of bearing in retainer	0.001T to 0.001L	(*)	(*)
4-10	C	ID of bearing	1.5753 to 1.5748	(*)	(*)
4-10	D	OD of gearshaft	1.5747 to 1.5752	(*)	(*)
4-10	C-D	Fit of gearshaft in bearing	0.0001L to 0.0009L	(*)	(*)
4-10	E	OD of gearshift spindle	0.7495 to 0.7500	(*)	(*)
4-10	F	OD of bearing	1.0010 to 1.0015	(*)	(*)
4-10	G	ID of housing bore for bearing	0.9995 to 1.0005	(*)	(*)
4-10	F-G	Fit of bearing in housing	0.0005T to 0.0010T	(*)	(*)
4-10	H	OD of gearshaft	1.3779 to 1.3784	(*)	(*)
4-10	I	ID of bearing	1.3775 to 1.3780	(*)	(*)
4-10	H-I	Fit of gearshaft in bearing	0.0001L to 0.0009L	(*)	(*)
4-10	J	OD of bearing	2.8341 to 2.8346	(*)	(*)
4-10	K	ID of retainer bore for bearing	2.8346 to 2.8352	(*)	(*)
4-10	J-K	Fit of bearing	0.0000 to 0.001L	(*)	(*)

(7) Press bearing (3) into retaining assembly (2) and secure with retaining ring (4).

(8) Slide gear (5) into bore of bearing (3) and secure with retaining ring (1).

(9) Press bearing (6) into housing (7). Screw threaded retainer assembly (2) into bore of housing (7).

(10) Install drain plug 117) and plug (5) in housing (7).

(11) Position gasket (8) and plate (14) on

housing (71 and secure with six washers and screws 110 and 91.

(12) Install plug (11) in fitting (12) and install gasket (13) and fitting (12) in plate (14).

Note. **Refer to lubrication order (LO 9-2590-213-120 for lubrication of right-angle drive power take-off.**

f. Adjustment. To adjust the right-angle drive power take-off, refer to figure 4-12 and proceed as follows.

(1) Lock the output drive shaft and rotate the input drive shaft and check for backlash. Tighten or loosen the input drive shaft retainer until backlash specification is obtained.

(2) Check measurement of dimension "A".

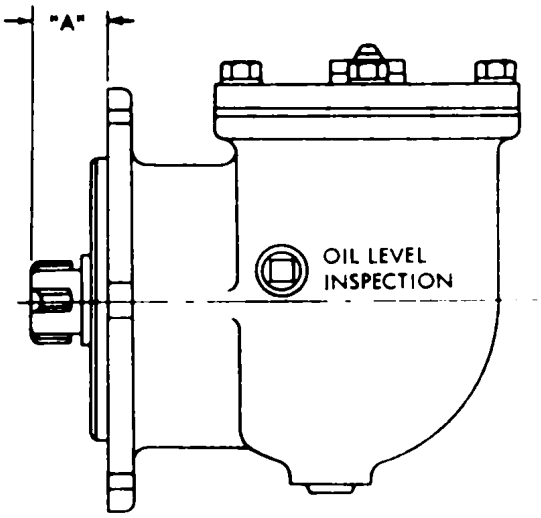

Maximum deviation from dimension "A" shall not exceed + 0.0017.

(3) Repeat procedures (1) and (2) as required until dimension "A" and backlash specifications are obtained.

4-34. Electromagnetic Clutch. The electromagnetic clutch is mounted in the vehicle as an integral part of the pump and drive assembly (pump. magnetic clutch, and right-angle drivel.

a. Removal and Installation. Refer to figure 4-5 through 4-7 for instructions on removal and installation of the complete unit. Follow the alphabetical sequence of views for removal and the numerical sequence of views for installation. Refer to figure 4-8 for disassembly and assembly of electromagnetic clutch from/to the pump assembly and right-angle drive.

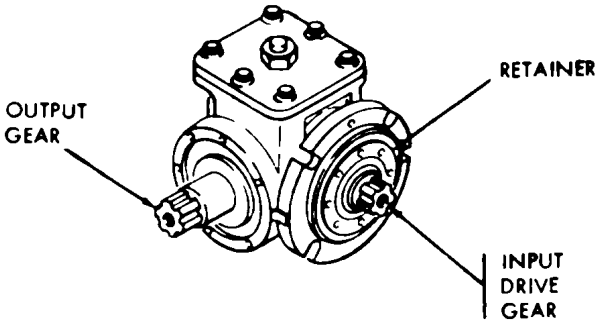

DIMENSION "A" -	SUBTRACT MEASURED DIMENSION ON HOUSING FROM SUM TOTAL DIMENSION ON GEAR SET (MATCHED PAIR) DIFFERENCE SHOULD BE WITHIN *0.0017 AFTER BACKLASH IS SET.
BACKLASH	- 0.004 TO 0.006.

AT 19709

Figure 4-12. Adjustment dimensions for right-angle drive take-off.

b. Disassembly. For disassembly electromagnetic clutch, refer to figure 4-13 and proceed as follows.

(1) Disconnect retaining ring (4) from shaft (8) and remove bearing (5).

(2) Using spanner wrench 5120-293-0798, remove threaded ring (11) from clutch assembly (6).

(3) Slide shaft (8) from clutch assembly (6).

(4) Remove key (7) from shaft (8).

(5) Disconnect retaining ring (10) from shaft (8) and remove bearing (9).

c. Cleaning. Refer to paragraph 4-21 for cleaning instructions.

d. Inspection. Check the components for wear limits as specified in table 4-11.

e. Assembly. To assemble the electromagnetic clutch, refer to figure 4-13 and proceed as follows.

(1) Slide bearings (9) over shaft (8) and secure with retaining ring 110).

(2) Install key (7) in shaft (8) and slide shaft (8) into clutch assembly (6).

(3) Using spanner wrench 5120-293-0798, install threaded ring (11) in clutch assembly (6).

(4) Slide bearing (5) over shaft (8) and secure with retaining ring (4).

Note. **Refer to lubrication order (LO 9-2590-213-12) for lubrication of magnetic clutch.**

f. Adjustment. To adjust air gap of electromagnetic clutch, refer to figure 4-14,

4-35. Replacement of Right-Angle Drive Sprocket.

a. Removal and Installation. Refer to figure 4-15 for instructions on replacement of right-angle drive sprocket.

b. Disassembly. To disassemble the right-angle drive power take-off sprocket, refer to figure 4-15. Drive pin from connecting link, separate connecting links, and remove chain from sprockets.

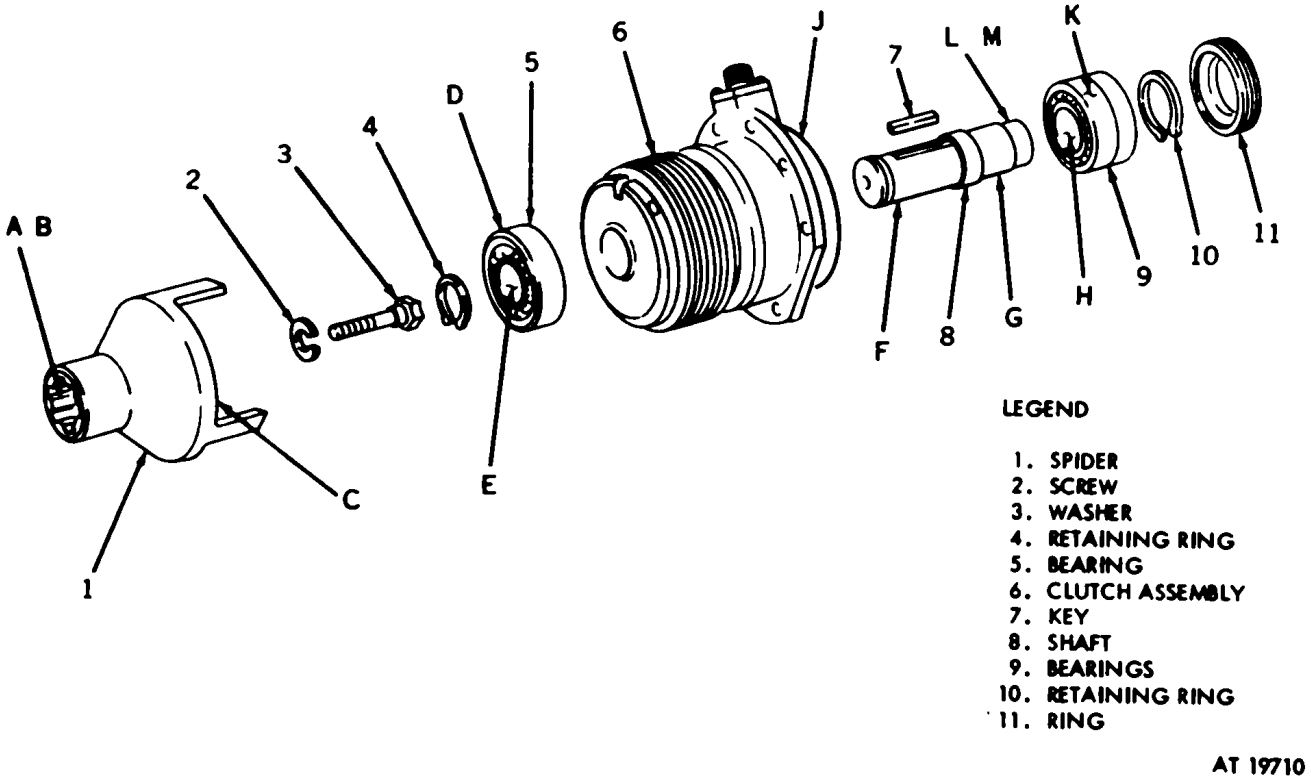

Figure 4-13. Disassembly or assembly of magnetic clutch.

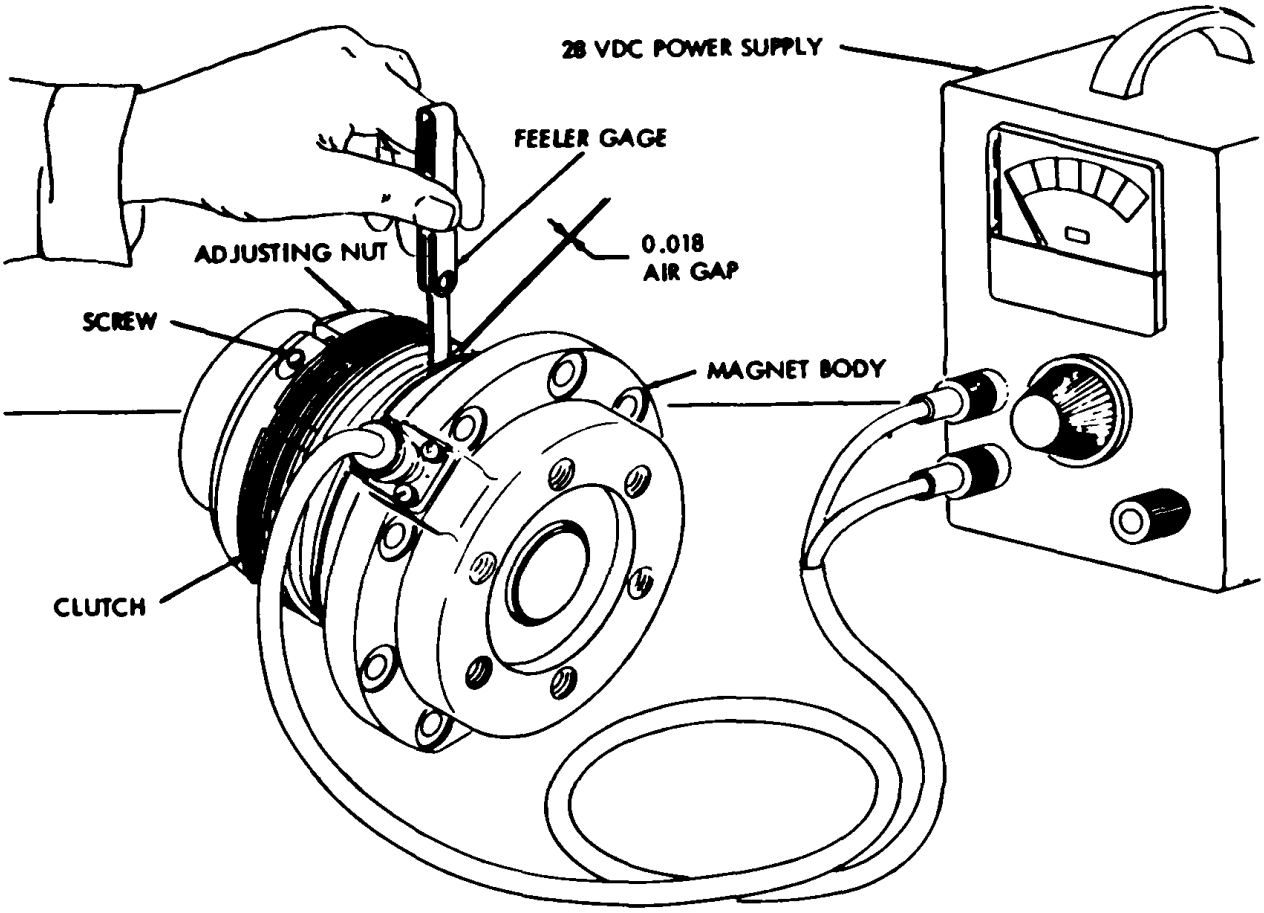

1 CONNECT A 28-VOLT DC POWER SUPPLY TO MAGNETIC CLUTCH. TURN ON POWER TO ACTUATE CLUTCH.

2 WITH CLUTCH ACTUATED, USE A FEELER GAGE TO CHECK AIR GAP BETWEEN MAGNET AND CLUTCH AT 90 DEGREE INTERVALS AROUND CIRCUMFERENCE. THE AVERAGE OF THE FOUR FEELER GAGE READINGS SHOULD N 0.018. IF THIS AVERAGE IS OBTAINED, THE CLUTCH IS PROPERLY ADJUSTED. IF NOT, PROCEED TO STEP 3.

3 LOOSEN SCREW IN ADJUSTING NUT AND TURN ADJUSTING NUT CLOCKWISE TO INCREASE AIR GAP, OR COUNTERCLOCKWISE TO DECREASE AIR GAP. FIVE DEGREES OF NUT TRAVEL WILL CHANGE AIR GAP APPROXIMATELY 0.001 .

4 ADJUST AIR GAP UNTIL FOUR FEELER GAGE READINGS AVERAGE 0.018 WITH CLUTCH ACTUATED. TIGHTEN SCREW.

5 DISCONNECT POWER SUPPLY FROM MAGNETIC CLUTCH.

AT 19711

Figure 4-14. Adjustment of magnetic clutch.

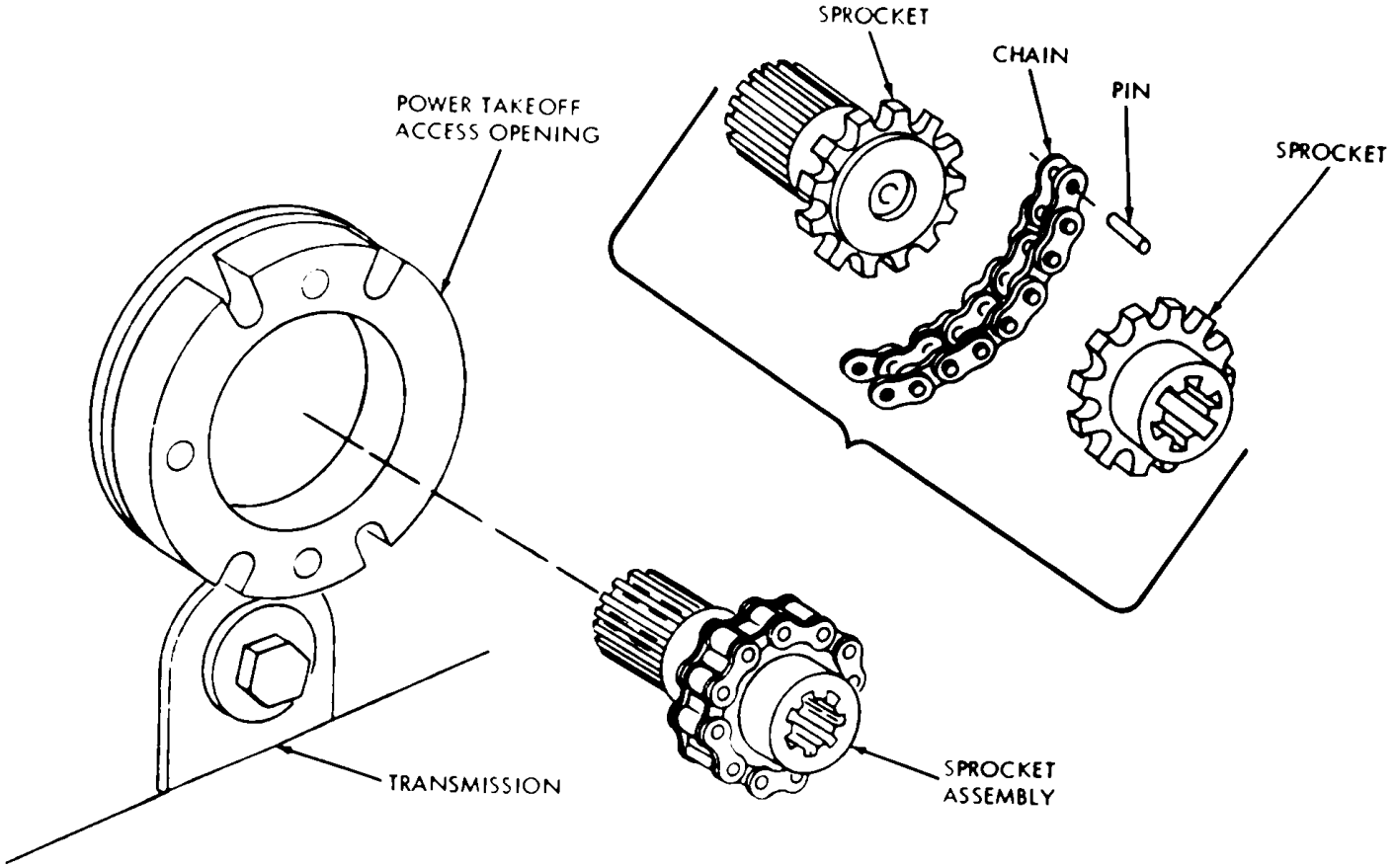

REMOVE/INSTALL PUMP AND DRIVE ASSEMBLY (FIG. 4-5 THRU 4-7).

REMOVE/POSITION SPROCKET ASSEMBLY FROM/ON POWER TAKEOFF IN TRANSMISSION AT 19712

Figure 4-15. Replacement. disassembly or reassemble of right-angle drive power take-off sprocket.

Table 4-11. Repair and Rebuild Standards for Electromagnetic Clutch

Figure Number	***Reference Letter***	***Point Measurement***	***Size and Fit of New Parts***	***Wire Limits***	
				Direct & General Support	***Depot***
4-13	A	ID of spider recess for bearing	2.4409 to 2.4416	(*)	(*)
4-13	B	OD of bearing	2.4404 to 2.4409	(*)	(*)
4-13	A-I	Fit of bearing ill spider	.0000 to .0012L	(*)	(*)
4-13	C	ID of bearing	1.1807 to 1.1811	(*)	(*)
4-13	D	OD of shaft	1.1812 to 1.1816	(*)	(*)
4-13	C-D	Fit of shaft in bearing	0.001T to .0009T	(*)	(*)
4-13	E	OD of shaft	1.3781 to 1.3785	(*)	(*)
4-13	E-F	Fit of shaft in bearing	.0000 to .0010T	(*)	(*)
4-13	G	ID of magnet body recess for bearings	2.4400 to 2.4416	(*)	(*)
4-13	H	OD of bearings	2.4404 to 2.4409	(*)	(*)
4-13	G-H	Fit of bearings in magnetic body	0000 to .0012L	(*)	(*)

c. Cleaning. Refer to paragraph 4-21 for cleaning inspections

d. Inspection. Inspect the component of right-angle drive sprocket as directed in paragraph 4-23.

e. Assembly. To assemble the right-angle drive power take-off sprocket, refer to figure 4-15. Install chain around sprocket gears, engage chain links, and install pin.

CHAPTER 5
SHIPMENT AND LIMITED STORAGE AND DEMOLITION TO PREVENT ENEMY USE

Section I. SHIPMENT AND LIMITED STORAGE

5-1. General

Commanders are responsible for ensuring that vehicles issued or assigned to their command are maintained in a serviceable condition and properly cared for, and that personnel under their command comply with technical instructions. Lack of time, lack of trained personnel, or lack of proper tools may result in a unit being incapable of performing maintenance for which it is responsible. In such cases unit commanders, with the approval of major commanders, may place a vehicle in administrative storage, or return it to supply agencies. When preparing the M8A3 bulldozer for administrative storage or for shipment, the unit commander will be responsible for processing the vehicle to protect against corrosion, deterioration, and physical damage.

5-22. Administrative Storage Instructions

a. Time limitations Administrative storage is restricted to a period of 90 days and must not be extended unless the vehicle is reprocessed in accordance with b below.

b. Storage Procedure Disassembly will be limited to that necessary to clean and preserve surfaces. Except as otherwise noted, and to the maximum limited extent consistent with safe storage, the bulldozer will be placed in administrative storage in a completely assembled condition, if practicable. Equipment will be installed and adjustments made so that the bulldozer may be placed in service and operated with a minimum of delay.

(1) Bulldozers must be stored in the most favorable location available, and preferably one that affords protection from exposure to the elements and from pilferage.

(2) Perform a "Q" quarterly preventive maintenance service on bulldozers intended for administrative storage. This maintenance will consist of inspecting, cleaning, servicing, preserving, lubricating, adjusting, and minor replacement of repair parts, if required.

(3) Provide access to the bulldozer to permit inspection, servicing, and subsequent removal from storage.

(4) Mark the bulldozer "Administrative Storage" (with tag or other convenient method). Bulldozers so marked will not be operated while in this category.

c. Inspection in Administrative Storage

(1) Visual inspection of vehicles in administrative storage TM 740-90-1 must be conducted at least once each month and immediately following hard rains, heavy snow storms, wind storms, or other severe weather conditions. Disassembly will be performed as necessary to determine the full extent of any deterioration or damage found. A record of these inspections will be maintained for each vehicle in administrative storage and attached to the vehicle in such a manner as to protect the record from the elements.

(2) When rust or deterioration is found on an unpainted area, necessary reprocessing for administrative storage will be immediately accomplished. Damages caused to the vehicle by severe weather conditions will be promptly repaired. Deterioration or damage to one equipment material (OEM) packaging will be repaired as necessary. Painted surfaces showing evidence of deterioration will be thoroughly cleaned and dried and repainted, using paint of the same quality and color as the original paint.

Note. **Refer to TM 9-208-1 for cleaning instructions, and TM 9-213 for touchup painting instructions.**

5-3. Shipping Instructions

a. Preparation for Shipment. Preservation and other protective measures taken to prepare

vehicles and accompanying tools and equipment for shipment must be sufficient to protect the material against deterioration and physical damage during shipment.

(1) Cleaning. Prior to application of preservatives, all exposed machined surfaces must be cleaned to ensure removal of corrosion, soil, grease, residues and fingerprints, perspiration, or other acid or alkali residues Refer to TM 9-208-1 for cleaning information and procedures.

(2) Drying. Refer to TM 9-208-1.

(3) Lubrication. See paragraph 3-12.

(4) Preservation. All critical unpainted metal surfaces must be protected during shipment. Oil or grease covered in the lubrication section (paragraph 3-12) may be used for this purpose, but it is effective for only a few days and equipment so protected must be closely watched for signs of corrosion. Selection of preservatives will be such that their application, use, or removal will not damage the surface to which they are applied.

(5) Marking. The unit commander must ensure that all material is properly marked and identified prior to shipment. Type of processing, date processed, and depot symbol will be stenciled on the front of the bulldozer.

(1) Preparation of vehicle. When the bulldozer is installed on the tank, refer to TM 92350-224-20 for vehicular instruction to be used in conjunction with the above.

b. Army Shipping Documents Prepare all Army shipping documents accompanying freight in accordance with AR 725-5.

c. Loading and Blocking of Bulldozer on or in Railroad Cars.

Note. **Refer to TM 9-2350-224-20 for loading and blocking instructions pertaining to the tank, to be used in conjunction with those given here.**

(1) Loading.

(*a*) When the bulldozer is installed on the tank, load the tank and attached bulldozer on flatcar, leaving a minimum clearance of four inches below, and six inches above, behind, and to each side of the flatcar brake wheel. Increase clearance, provided proper location d load is not affected.

Note. **Prior to loading tank with attached bulldozer. the moldboard must be placed in the raised position.**

(*b*) When bulldozers are shipped by rail, every precaution must be taken to see that they are properly loaded and :securely fastened and blocked to the floor of railroad cars.

(*c*) For method of loading and general loading rules pertaining to rail shipment of vehicles, refer to TM 9-200.

Warning: The height and width of vehicles, when prepared for rail transportation, must not exceed the limitations indicated by the loading table in SM 9-184 1. Whenever possible, local transportation officers must be consulted about the limitations of the particular railroad lines to be used for the movement in order to avoid delays, dangerous conditions, or damage to equipment.

(2) Blocking bulldozer on railroad cam.

(*a*) General. All blocking instructions specified herein are minimum and are in accordance with Pamphlet No. MD-7, "Rules Governing the Loading of Department of Defense Material on Open-Top Cars," of the Association of American Railroad. Additional blocking may be added, as required, at the discretion of the officer in charge.

Note. **Any other instruction, regardless of source, which appear to be in conflict with this publication or existing loading rules of the carriers, must be submitted for approval to the U.S. Army Tank Automotive Command, Detroit Arsenal Warren, Michigan, 48090, ATTN: AMSTA-MCP.**

(*b*) Preliminary Blocking. Block vehicles as prescribed in TM 9-2350-22420.

(*c*) Blocking Moldboard. Use two 2 x 6 inch wood cleats to block moldboard. Locate one cleat across car floor, against front of moldboard Nail cleat to car floor, using four penny nails staggered along its length. Place the other cleat on top of nailed cleat and against the moldboard. Nail upper cleat to lower cleat and car floor, using four penny nails.

(*d*) Strapping bulldozers. Cut six strand of wire long enough to reach at least twice the distance from the right pushbeam to a stake pocket located on the right side of the flatcar. Twist wires together to form a cable. Loop one end of cable around the stake pocket, bringing the other end of cable toward the pushbeam for a distance of six inches, just beyond the halfway point

between the pushbeam and stake pocket. Twist end of cable tightly around unlooped portion of cable. Loop the free end of cable round the pushbeam, bringing the end down toward the stake pocket loop. Inert the other end through the stake pocket loop and twist end of cable tightly around unlooped potion of cable. Insert a tightening, tool in one of the loops. Place a random length 2 x 2 inch block in the other loop. Using the tightening tool, twist cable only taut enough to take up a slack. Retain the 2 x 2 inch block in the cable loop to maintain a tightening tool aperture for future tightening of strapping if necessary. Repeat this operation for securing left pushbeam to a left side stake pocket, thereby securing bulldozer and front of vehicle to the flatcar.

(3) Shipping bulldozer disassembled. Disassembled will bulldozers in pack securely in sheather skid-type nailed wooden crates, constructed as prescribed in TM 9-200. Blocking of crates on railroad cars is also prescribed in TM 9200.

Section II. DEMOLITION OF MATERIEL TO PREVENT ENEMY USE

5-4. General

a. Destruction of the tank-mounting, earth moving bulldozer, M8A3, when subject to capture or .abandonment in the combat zone, will be undertaken by the using arm only when, in the judgment of the unit commander concerned, such action is necessary in accordance with orders of, or policy established by, the Army commander. When in possession of maintenance personnel, destruction will be in accordance with FM 9-1, and the information below as applicable.

b. The information which follows is for guidance only. Certain of the procedures outlined require the use of explosives and incendiary grenades which are not authorized items for use with the bulldozer. The issue of these and related materials, and the conditions under which destruction will be effected, are command decisions in each case, and in accord-ore with the tactical situation. Of the means of destruction, those most generally applicable are:

(1) Mechanical. Requires axe, pick mattock, sledge, crowbar, or similar implement.

(2) Burning. Requires gasoline, oil, incendiary grenades, or other flammables.

(3) Demolition. Requires suitable explosives or ammunition.

(4) Gunfire. Includes artillery, machine-guns, rifles using rifle grenades, and launchers using anti-tank rockets. Under some circumstances, hand grenade may be used. In general, destruction of essential parts, followed by burning, will usually be sufficient to render the material useless. However, election of the particular method of destruction requires imagination and resourcefulness in the utilization of the facilities at hand. Time is usually critical.

c. If destruction to prevent enemy use is required, the bulldozer must be so badly damaged that it cannot be restored to a usable condition in the combat zone either by repair or cannibalization. Adequate destruction requires that all parts essential to the operation of the bulldozer, including essential spare parts, be destroyed or damaged beyond repair. However, when lack of time and personnel prevents destruction of all parts, priority is given to the destruction of those parts most difficult to replace. Equally important, the same essential parts must be destroyed on all bulldozers so that the enemy cannot construct one complete unit from several damaged ones.

d. If destruction is directed, due consideration should be given to:

(1) Selection of a point of destruction that will cause greatest obstruction to enemy movement and also prevent hazard to friendly troops from fragments or ricocheting projectiles which may occur incidental to the destruction.

(2) Observance of appropriate safety precautions.

5-5. Destruction by Demolition

Note. **The following instructions contain a method of destruction for the bulldozer, to be used only when the bulldozer is separate 'from the tank. If the bulldozer is assembled to the tank and both are to be destroyed, the charges described below for destruction of the bulldozer should be connected for simultaneous detonation with the charges set for destruction of the tank.**

a. Prepare six 2-pound charges of EXPLOSIVE, TNT, using 1-pound TNT blocks or equivalent together with the necessary detonating cord to make up the required charges. Place the charges as follows:

(1) Set the first and second charges on the outer-tilt arm assemblies, one on the left side and the other on the right side.

(2) Set the third and fourth charges on the hydraulic cylinder assemblies, one on the left side and the other on the right side.

(3) Set the fifth and sixth charges on the inner-tilt arm assemblies one on the left side and the other on the right side.

b. Connect all six charges with detonating cord so they may be fired simultaneously.

c. Provide for dual priming to minimize the possibility of a misfire. For complete details on the use of demolition materials and methods of priming and detonating demolition charge refer to FM 5-25. Training and careful planning are essential. The dander zone is approximately 250 meters. Elapsed time: out 5 minutes.

APPENDIX A

REFERENCES

A-1. The following indexes should be consulted for latest changes or revisions of technical publication. publications relating material covered in this frequently references given in this appendix and for new

Index of Administrative Publications	DA Pam 310-1
Index of Blank Forms	DA Pam 310-2
Index of Training and Organizational Publications	DA Pam 310-3
Index of Technical Manuals, Technical Bulletins, Supply Bulletins and Lubrication Orders	DA Pam 310-4
Index of Modification Work Orders	DA Pam 310-7

A-2. The following forms pertain to this material:

DA Form 2028, Recommended Change to Publications
DA Form 2407, Maintenance Request (EIR)
DA form 2408-2, Lubrication Record

A-3. The following publications contain information pertinent to major item material and associated material.

Administrative Storage	TM 740-90-1
Operation and Maintenance of Ordnance Material in Extreme Cold Weather	TM9-207
Painting Instructions for Field Use	TM9-213
Inspection, Car, and Maintenance of Anti-friction Bearings	TM9-214
Welding-Theory and Application	TM9-237
Material Used for Cleaning, Preparing, Abrading, and Cementing Ordnance Material	TM9-247
Lubrication	TM9-273
Manual for Full-Tracked Vehicle Drivers	TM21-306
Packing and Shipping of Material: Preservation, Packaging, and Packing of Military Supplies and Equipment	TM38-230
Army Equipment Record System and Procedures	TM 38-50
Lubrication Order	LO 9-2350-224-12
Operator's Manual	TM9-2350-224-10
Organizational Maintenance Manual	TM9-2350-224-20
Ordnance Direct Support Service	FM9-3
Ordnance General and Depot Support Service	FM 9-4
Safety, Accident Reporting and Records	AR 385-40
Report of Malfunctions and Accidents Involving Ammunition and Explosives	AR 700-1300-8
Solder and Soldering	TB SIG-222
Maintenance of Supplies and Equipment: Maintenance Responsibilities and Shop Operation	AR 750-5

APPENDIX B
MAINTENANCE ALLOCATION CHART

Section I. INTRODUCTION

B-1. General

B-2. The maintenance allocation chart indicates specific maintenance operations performed at the proper maintenance levels, on the basis of time, tools, and skills normally available to various maintenance levels in combat situations and influenced by maintenance policy and sound maintenance practices as outlined below.

B-3. Maintenance Functions.

B-4. The maintenance allocation chart designates overall responsibility for the maintenance function of an end item or assembly. Repair and / or overhaul of major assemblies is designated by authority of the Commanding Officer, except for specific functions listed in the maintenance allocation chart. Deviation from maintenance operations allocated in the maintenance allocation chart is authorized only upon approval of the Commanding Officer. Maintenance functions will be limited to and defined as follows:

INSPECT-To determine serviceability of an item by comparing its physical, mechanical, and electrical characteristics with established standards.

TEST-To verify serviceability and to detect electrical or mechanical failure by use of test equipment.

SERVICE--To clean, to preserve, to charge, and to add fuel, lubricants, cooling agents, and air.

ADJUST-To rectify to the extent necessary to bring into proper operating range.

ALINE-To adjust specified variable elements of an item to bring to optimum performance.

CALIBRATE-To determine the corrections to be made in the readings of instruments or test equipment used in precise measurement. Consists of the comparison of two instruments, one of which is a certified standard of known accuracy, to detect and adjust any discrepancy in the accuracy of the instrument being compared with the certified standard.

INSTALL-To set up for use in an operational environment such as an emplacement, site, or vehicle.

REPLACE-To replace unserviceable items with serviceable assemblies, subassemblies, or parts.

REPAIR-To restore an item to serviceable condition. This includes, but is not limited to, inspection, cleaning, preserving, adjusting, replacing, welding, riveting, and strengthening.

OVERHAUL-To restore an item to a completely serviceable condition as prescribed by maintenance serviceability standards using the Inspect with Repair Only as Necessary (IROANS technique.

REBUILD-To restore an item to a standard as nearly as possible to original or new condition in appearance, performance, and life expectancy. This is accomplished through complete disassembly of the item, inspection of all parts or components, repair or replacement of worn or unserviceable elements (items) using original manufacturing tolerances and specifications, and subsequent reassembly of the item.

B-5. Symbols.

B-6. The capital letters listed below, placed in the appropriate column, indicate the maintenance level responsible for performing the particular maintenance function. The symbol "% %" applies to organizational maintenance and indicates that the particular maintenance function may be performed provided it is specifically authorized by the direct support maintenance officer. Use of the symbol will apply only to replacement of major assemblies and time consuming operations which are within the capabilities of organization, but over which control by the commodity commands is considered essential. In no case will the direct support maintenance officer require the accomplishment of '"%%" maintenance function by an organization or unit, and in no case will a "%%" function authorize stockage of parts at organizational level.

Categories of Maintenance
C - Operator / Crew
0 - Organizational Maintenance
F - Direct Support Maintenance
H - General Support Maintenance
D - Depot Maintenance

MAINTENANCE ALLOCATION CHART
Trailer, Cable Reel, 3 ½ Ton, 2 Wheel, M310

(1) Group No.	(2) Functional Group	(3) Maintenance functions											(4) Tools and equipment	(5) Remarks
		A Inspect	B Test	C Service	D Adjust	E Align	F Calibrate	G Install	H Replace	I Repair	J Overhaul	K Rebuild		
	GROUP06 ELECTRICAL SYSTEM													
0607	Circuit Breaker													
	Lead Assemblies								O					
	Switch Assembly								O					
	0609.1 Assembly, Headlight								O					
	GROUP 20 POWER TAKE-OFF AND BULLDOZER													
2002.3	Sprocket, Power Take-Off, Right-Angle Drive								F					
	Drive, Right-angle, Power Take-Off							O	F					
2006.1	Arm, Tilt, Moldboard								F					
	Beam Push, Moldboard								F					
	Bracket, Mounting Moldboard								F					
	Cable, Lift, Emergency Moldboard							O						
	Edge, Cutting, Moldboard							O						
	Hook and Shafts, Carving, Moldboard								O					
2006.3	Cylinder and Ram, Moldboard							O	F					
	Packing, Cylinder Piston Rod							O						
2006.4	Clutch, Electro-Magnetic							F	H					
	Control Hydraulic System Oil Pump							O						
	Pump, Oil, Hydraulic System							O	F					
2006.5	Rods and Levers, Control, Hydraulic System Control Valve			O					O					
	Valve, Unloader, Hydraulic System							O	F					
	Valve, Directional Control Hydraulic System							O	F					
2006.6	Filter, Oil Reservoir		O											
	Plug, Filter, Drain, Oil Reservoir							O						
	Reservoir, Oil Hydraulic System							O						
	Screen, Oil Reservoir		O					O						
2006.7	Hoses and Fittings Hydraulic System							O						
2006.9	Guard and Brackets, Hydraulic System Tube and Hoses							F						
	GROUP 22 MISCELLANEOUS HULL AND ACCESSORIES													
2210	Plate, Data, Bulldozer							O						

APPENDIX C
BASIC ISSUE ITEMS LIST
AND
ITEMS TROOP INSTALLED OR AUTHORIZED LIST

Section I. INTRODUCTION

C-1. Scope

This appendix provides a list of basic issue items and items troop installed or authorized. These items are required to operate the equipment and enable it to perform its mission and function.

C-2. General

This appendix is divided into the following additional sections:

a. Section II Basic Issue Items List. A list of items which are furnished with and are required to operate the equipment. These items enable the equipment to perform its mission and function for which it was designed or intended.

b. Section III Items Troop Installed or Authorized List. A list of equipment not provided in TOE, TDA, or expendable items lists which, at the discretion of the unit commander, may accompany the vehicle but are not subject to be turned in with the vehicle. These items are listed and authorized in the organizational repair parts and special tools lists contained in the applicable end item technical manuals.

C-3. Explanation of Columns

The following provides an explanation of columns found in the tabular listings of section II and section III.

a. Source, Maintenance, and Recoverability Codes (SMR). These codes are of the uniform SMR code format and are listed in column 1 in five positions as follows:

(1) *Source Codes*. These codes are entered in the first and second positions and are assigned to support the items for maintenance, repair, or overhaul of end items. Source codes employed in these lists are defined as follows:

Code	*Definition*
PA	Item procured and stocked for anticipated or known usage.

(2) *Maintenance Code*. Maintenance codes are entered in the third and fourth positions. They indicate the level of maintenance authorized to use and repair the support item as defined below:

(a) Use. The maintenance code entered in the third position indicates the lowest maintenance level authorized to remove, replace, and use the support item. The use maintenance level employed in these lists is the code defined below:

Code	*Explanation and Application*
C	Crew or operator maintenance performed within organizational maintenance.

(b) Repair. The maintenance code entered in the fourth position indicates whether the item is to be repaired. It identifies the lowest maintenance level with the capability to perform complete repair (i.e., all authorized maintenance functions). This position, as employed in these lists, contains one of the following codes assigned by the service (s) that require the code:

Code	*Explanation and Application*
O	The lowest maintenance level capable of complete repair of the support item is the organizational level.
Z	Nonreparable; no repair is authorized

(3) Recoverability Code. This code is entered in the fifth position. It is assigned to a support item to indicate the disposition action on an unserviceable item. This fifth position, as employed in these lists, contains one of the codes defined below:

Code	*Definition*
D	Reparable item When beyond lower-level repair capability, return it to the depot. Condemnation and disposal are not authorized below depot level.
Z	Nonreparable item When unserviceable, condemn it and dispose of it at the level indicated in the third position (use).

b. Federal Stock Number. This column indicates the Federal stock number assigned to the item which will be used for requisitioning purposes.

c. Description. This column indicates the Federal item name and any additional description of the item required. A part number or other reference number is followed by the applicable five-digit Federal supply code for manufacturers in parentheses. Repair parts quantities included in kits, sets, and assemblies are shown in front of the repair part name. Usable-on code identifies the vehicle model an item is used on. Uncoded

items are applicable to all models.

d. Unit of Measure. A two-character alphabetic abbreviation indicating the amount or quantity of the item upon which the allowances are based; e.g., ft, ea, pr, etc.

e. Quantity Furnished With Equipment. This column indicates the quantity of an item furnished with the equipment.

f. Illustration. This column is divided as follows:

(1) *Figure Number.* This column indicates the figure number of the illustration in which the item is shown.

(2) *Item Number*. This column indicates the callout number used to reference the item in the illustration.

g. Quantity Authorized. This column indicates the quantity of the item authorized to be used with the equipment.

4. Special Information

a. Code letters for vehicle model designation are not furnished for the usable-on code portion of the description column. As of 1 January 1973, only the late production configuration of the M48A3 tank remains in the Army tactical fleet of vehicles; all early configurations have been updated.

b. The following listed equipment publications and materials, all carried in the pamphlet bag, are overpacked with the vehicle:

(1) TM 9-2590-213-15 Operator, Organizational, Direct Support, General Support, and Depot Maintenance manual (Including Repair Parts List) for Bulldozer, Earth-Moving: Tank mounting, M8A3 (2590-944-4903)

(2) LO 9-2590-213-12 Lubrication Order for Bulldozer, Earthmoving: Tank mounting, M8A3

Section II. BASIC ISSUE ITEMS LIST

In accordance with current Department of the army policy for selection and authorization of basic issue items, it has been determined that there are no ancillary items required to install and/or place the Bulldozer, M8A3, in an operational mode. All required items are included under the Bulldozer, M8A3, Federal stock numbered configuration.

Section III. ITEMS TROOP INSTALLED OR AUTHORIZED LIST

(1) Federal SMR	*(2) Federal stock number*	*(3) Description* *Ref. No & mfr code*	*(4) Unit of meas*	*(5) Qty auth*
PACZZ	5120-277-1486	WRENCH, PIPE ADJUSTABLE: Heavy-duty, 1/2 to I 1/2-Lnch pipe cap, 14 inches long (carried in vehicle tool bag 41-W-1663).	ea	1

Section I. INTRODUCTION

D-1. Scope

D-2. This appendix lists repair parts and special tools required for the performance of organizational, direct support, general support, and depot maintenance of the tank mounting, Earth Moving Bulldozer M8A3 as used on an M48A3 tank.

D-3. This Repair Parts and Special Tools List is divided Into the following sections.

a. Prescribed Load Allowance (PLA) Section II. A composite listing of the repair parts, special tools, test and support equipment having quantitative allowances for initial stockage at the organizational level.

b. Repair Parts Section III. A list of repair parts authorized for the performance of maintenance at all levels in figure and item number sequence.

c. Special Tools, Test and Support Equipment Section IV. A list of special tools, test and support equipment authorized for the performance of maintenance at all levels.

d. Federal Stock Number and Part Number Index Section V. A list of Federal stock numbers in ascending numerical sequence followed by a list of part numbers in ascending alpha-numeric sequence, cross-referenced to the illustration figure number and item number.

D-4. Explanation of Columns.

The following provides an explanation of columns in the tabular lists in Sections II, III, and IV.

a. Source, Maintenance, and Recoverability Codes (SMR), Column 1.

(1) Source code, indicates the selection status and source for the listed item. Source codes are:

Code	*Explanation*
"P"	Repair parts which are stocked in or supplied from the GSA / DSA, or Army supply system and authorized for use at indicated maintenance categories.
"P2"	Repair parts which are procured and stocked for insurance purposes because the combat or military essentiality of the end item dictates that a minimum quantity be available in the supply system.
"P9"	Assigned to items which are NSA design controlled; unique repair parts, special tools, test, measuring and diagnostic equipment, which are stocked and supplied by the Army COMSEC logistic system, and which are not subject to the provisions of AR 380-41.
"P10"	Assigned to items which are NSA design controlled; special tools, test, measuring and diagnostic equipment for COMSEC support, which are accountable under the provisions of AR 380-41, and which are stocked and supplied by the Army COMSEC logistic system.
"M"	Repair parts which are not procured or stocked, but are to be manufactured in indicated maintenance levels.
"A"	Assemblies which are not procured to stocked as such, but are made up of t% o or more units. Such component units carry individual stock number &ad descriptions, are procured and stocked separately and can be assembled to form the required assembly at indicated maintenance categories.
"X"	Parts and assemblies which are n, procured or stocked and the mortality which normally is below that , the applicable end item or component. The failure of such part of assembly should result in retirement of the end item from the supply system.

Code *Explanation*

"X 1" Repair parts which re not procured or stocked. The requirement for such items will be filed by use of the next higher assembly or component "X2" Repair parts which are not stocked. The indicated maintenance category requiring such repair parts will attempt to obtain same through cannibalization. Where such repair parts are not obtainable through cannibalization, requirements will be requisitioned, with accompanying justification, through nor supply channels.

"C" Repair parts authorized for local procurement Where such repair parts are not obtainable from local procurement, requirements will be requisitioned through normal supply channels accompanied by a supporting statement of non-availability from local procurement.

"G" Major assemblies that re procured with PEMA funds for initial issue only as exchange assemblies at DSU and GSU level. These assemblies will not be stocked above DS and/or returned to depot supply level

(2) Maintenance code; indicates the lowest category of maintenance authorized to install the listed item. The maintenance level odes are: explanation

Explanation

"C" Crew or operator maintenance.

"O" Organizational maintenance.

"F" Direct support maintenance.

"H" General support maintenance.

"D" Depot maintenance.

(3) Recoverability code; indicate whether unserviceable items should be returned for recovery or salvage. Items not coded are expendable. Recoverability codes are:

Code *Explanation*

"R" Repair parts and assemblies which are economically repairable at DSU and GSU activities and normally re furnished by supply on an exchange basis.

'T" High dollar value recoverable repair parts which are subject to special handling and are issued on an exchange basis. Such repair parts normally re repaired or overhauled at depot maintenance activities.

"U" Repair parts specially selected for salvage by reclamation units because-e of precious metal content, critical materials, or high dollar value reusable casing or casting.

"S" Repair parts and assemblies which re economically repairable at DSU and GSU activities and normally re furnished on an exchange basis. When determined to be uneconomically repairable by, DSU and GSU activities, they will be returned to the depot for evaluation and analysis prior to final disposition.

"E" Repair parts which are expendable.

"N" Item other than repair parts which re determined to be Nonexpendable.

"X" Any item not coded R, T, U, S, N, and E above to indicate the item is expendable.

b. Federal Stock Number Column 2. This column indicates the Federal stock number assigned to the item and will be used for requisitioning purposes.

c. Description Column 3. This column indicates the Federal item name and any additional description of the item required. A part number or other reference number is preceded by the applicable five-digit Federal supply code for manufacturers in parentheses. All reference numbers that are not preceded by a Federal supply code re to be coated as 19207 items (Army Tank-Automotive Command, Warren, Michigan). Repair part quantities included in kits, sets, and assemblies are shown in front of the repair part name. Materiel required for manufacture or fabrication is identified.

d. Unit of Measure Column 4. A 2-character alphabetic abbreviation indicating the amount or quantity of the item upon which the allowances are based, e.g., ft. e., pr., etc.

e. Quantity Incorporated in Unit Column 5.

(1) This column indicates the quantity of the items used in the functional sub-group or assembly.

(2) If an assembly is used more than once in the same functional group, the quantities and allocations reflect the multiple of the components in the assembly. When an assembly explode requires more than one illustration, all functions of identical parts are indicated in the initial listing of these parts and the quantity incorporated in unit column indicates that the total quantities used in the assembly. Subsequent entries of these parts for the other illustrations reference the initial entries.

(3) A "=" symbol appearing in this column, in lieu of a quantity, indicates that a definite quantity *cannot be indicated, e-g., shims, spacers, etc.*

f. 15-Day Organizational Maintenance Allowance, Column 3 of Section II (PLA) and Column 6 of Sections III (RPL) and IV (STL).

(1) The allowance columns are divided four subcolumn. Indicated in each subcolumn opposite each item is the total quantity of items authorized for the number of equipments supported. Those items which are referenced to an initial entry are not listed with allowances. The initial entry provides the allowances. Item authorized for use as required but not for initial stockage are identified with an asterisk in the allowance column.

(2) The quantitative allowances for organizational level of maintenance represents one initial prescribed load for a 15-day period for the number of equipments supported. Units and organizations authorized additional prescribed loads will multiply the number of prescribed loads authorized by the quantity of repair part reflected in the density column applicable to the number of items supported to obtain the total quantity of repair parts authorized.

(3) Organizational units providing maintenance for more than 100 of the equipment shall determine the total quantity of p required by converting the equipment quantity to a decimal factor by placing a decimal point before the next to last digit of the number to indicate hundredths, and multiplying the decimal factor by the parts quantity authorized in the 51-100 allowance column. Example: authorized allowance for 51-100 equipments is 40; for 150 equipments multiply 10 by 1.50 or parts required.

(4) Subsequent changes to allowance will be limited as follows: No change in the range of items is authorized. If additional items re considered necessary, recommendation should be forwarded to Commanding General, U.S. Army Tank-Automotive Command, Warren, Michigan 48090, ATIN: AMSTA-MC for exception or revision to the allowance list Revisions to the range of items authorized will be made by the Commanding General, U.S. Army Tank Automotive Command, Warren, Michigan 48090, based upon engineering experience, demand data, or TAER's information.

g. 30-Day DS/ GS Maintenance Allowances Column 7/8 of Section III (RPL) and IV (STL).

Note. **Allowances in GS Column are for GS Maintenance only.**

(1) The allowance columns re divided into three subcolumns. Indicated in each subcolumn, opposite the first appearance of item, is the total quantity of items authorized for the number of equipments supported. Subsequent appearances of the same item will have the letters "REF" in the applicable allowance columns. Items authorized for use as required but not for initial stokage are identified with an asterisk in the allowance column.

(2) The quantitative allowance for DS/ GS levels of maintenance will represent initial stockage for a 30-day period for the number of equipments supported.

(3) Determination of the total quantity of parts required for maintenance more than 100 of these equipments can be accomplished by converting the equipment quantity to a decimal factor by placing a decimal point before the next to last digit of the number to indicate hundredths, and multiplying the decimal factor by the parts quantity authorized in the 51-100 allowance column. Example: authorized allowance for 51-100 equipments is 40; for 150 equipments multiply 40 by 1.50 or 60 parts required.

h. 1-Year Allow per 100 Equipments / Contingency Planning Purpose Column 9 of Section III (RPL) and IV (STL). Indicates opposite the first appearance of each

item that the total quantity required for distribution and contingency planning purposes. The range of items indicate total quantities of all authorized items required to provide for adequate support of 100 equipments for one year.

i. Depot Maintenance Allowance per 100 Equipments Column 10 d Section III (RPL) and IV STL). Indicate opposite the first appearance of each item the total quantity authorized for depot maintenance of 100 equipments. Subsequent appearances of the same item will have the letters "REF" in the allowance column. Items authorized for use as required but not for initial stockage are identified with an asterisk in the allowance column.

j. Illustration Column 11. This column is divided as follows.

(1) Figure Number, Column 11. a., indicates the figure number of the illustration in which the item is shown.

(2) Item Number, Column 11. b., indicates the callout number used to reference the item in the illustration.

D-5. How to Locate Repair Parts.

a. When Federal Stock Number or Reference Number is Unknown.

(1) First, using the table of contents, determine the functional subgroup, i.e., electrical system power take-off and bulldozer within which the repair parts belong. This is necessary since illustration are prepared for functional subgroups and listings are divided into the same groups.

(2) Second, find the illustration cover the functional subgroup to which the rep parts belong.

(3) Third, identify the repair part on the illustration and note the illustration figure and item number d the repair part.

(4) Fourth, using the Repair Parts Listing, find the function subgroup to which the repair part belongs and locate them illustration figure and item number noted on the illustration.

b. When Federal Stock Number or Part Number is Known.

(1) First, using the Index of Federal Stock Number and Part Number, find the pertinent Federal Stock Number or part number. This index is in ascending FSN sequence followed by a list of part numbers in alpha-numeric sequence cross-referenced to the illustration figure number and item number.

(2) Second, using the Repair Parts Listing, find the functional subgroup of the repair part and the illustration figure number and item number referenced in the Index of Federal Stock Number and Part Numbers.

D-6. Abbreviations and Symbols.

Abbreviation	*Explanation*
BN	Battalion
CO	Company
I.D	Inside Diameter
O.D	Outside Diameter
WA	Wall
=	As' required.
*	Indicates items which are to be requisitioned as required for immediate use only. (Not authorized for stockage in prescribed load.)

D-7. Federal Supply Codes for Manufacturers.

Code	*Manufacturer*
00000	Ordnance Carp
10001	Naval Ordnance System Command Washington, D.C 20360
12204	Chrysler Corp.,341 Massachusetts Avenue Detroit, Michigan 48231
19204	Rock Island Arsenal. Rock Island, Illinois
19207	Army Tank-Automotive Command. Warren, Michigan
21450	Ordnance Corp Engineering Standards, Rock Island Arsenal, Rock Island, Illinois
24617	General Motor Corporation Detroit, Michigan
33525	Kidde Walter and Co., Inc., Belleville, N.J.
38597	Martin Marietta Corp., Baltimore Division, P.O Box 988, Baltimore, Md. 21203
41625	Morse Instrument Co. 21 Clinton Street Hudson Ohio 44236
46522	Hupp Corporation, Cleveland Division 1135 Ivanhoe Road Cleveland, Ohio 44110
57733	Stewart-Warner Corporation 1826 Diversey Parkway Chicago, IL 60614
650O4	Westinghouse Electric Corp. Braddock Avenue Pittsburgh, Pa 15112
70470	Astrup Company 2937 W. 25th Cleveland, Ohio 44113

Code	Manufacturer
80205	National Aerospace Standards Committee, Aeronautical Industries Association of America Washington, D.C.
80244	General Services Administration, Federal Supply Service Washington D.C.
81348	Federal Specifications Promulgated by General, Services Administration
81349	Military Specifications Promulgated by Standardization, Div. Directorate of Logistic Services DSA
81361	Edgewood Arsenal Edgewood, Arsenal, Md. 21018
88044	Aeronautical Standards Group Dept. of Navy and Air Force
95138	Perfecting Service Co, Charlotte N.C.
96906	Military Standards Promulgated by Standardization, Div. Directorate of Logistic Service DSA
97084	Gibson Good Tools Inc., 75 Peal SL Sidney, N.Y. 13838
97403	Army Engineer Research and Development Laboratories Fort Belvoir, Va.

D-8. Recommendations for Maintenance Publication Improvements.

Report of errors, omissions, and recommendations for improving this publication by the individual user is encouraged. Report should be submitted on DA Form 2028 (Recommended Changes to DA Publication) and forwarded direct to Commanding General, U.S. Army Tank-Automotive Command, Warren, Michigan 48090, ATIMN: AMSTA-MCP.

SECTION II. PRESCRIBED LOAD ALLOWANCE

(1) FEDERAL STOCK NUMBER	(2) DESCRIPTION	USABLE ON CODE	(3) 15-DAY ORG. MAINT. ALLOWANCE (a) 1-5	(b) 6-20	(c) 21-50	(d) 51-100
5305-653-9544	GASKET: power take-off to clutch housing (7383695)	*	*	*	2	
	POWER TAKE-OFF ASSEMBLY: transmission (10940668)	*	*	*	2	
2520-653-9220	SPROCKET: transmission (76999641)	*	*	*	2	
2520-653-9613	SPROCKET: mount 17699927)	*	*	*	2	
	GASKET: transmission cover, right angle drive (116456411)	*	*	*	2	
5925-026-4767	CIRCUIT BREAKER: control pane (96906-39062-1)	*	*	*	2	
5930-296-6318	SWITCH ASSEMBLY: hydraulic pump (96906-39061-1)	*	*	*	2	
	MANIFOLD: hydraulic cylinder (76999491	*	*	*	2	
2590-657-1500	GASKET: cover tube cover (7699918)	*	*	*	2	
	GASKET: screen access cover (7699910)	*	*	*	2	
2590-656-3613	GASKET: reservoir top ,over (7699952)	*	*	*	2	
2590-970-8970	CYLINDER AND RAM ASSEMBLY: right (10940524-2)	*	*	*	2	
2590-907-8969	CYLINDER AND RAM ASSEMBLY: left (109405241)	*	*	*	2	
	RESERVOIR ASSEMBLY: hydraulic cylinder (11645215)	*	*	*	2	

(1) SMR CODE	(2) FEDERAL STOCK NO.	(3) DESCRIPTION	(4) UNIT OF MEAS-URE	(5) QTY. INC. IN UNIT	(6) ORGANIZATIONAL 15 DAY MAINT. ALLOWANCE				(7) DIRECT SUPPORT 30-DAY MAINT. ALLOWANCE			(8) GENERAL SUPPORT 30-DAY MAINT. ALLOWANCE			(9) 1 YR. ALW. PER 100 EQUIP/ CNTGCY PLAN-NING	(10) DEPOT MAINT. ALW PER 100 EQUIP	(11) ILLUS-TRATION	
					(A) 1-5	(B) 6-20	(C) 21-50	(D) 51-100	(A) 1-20	(B) 21-50	(C) 51-100	(A) 1-20	(B) 21-50	(C) 51-00			(A) FIG NO.	(B) ITEM NO.
		GROUP-06-ELECTRICAL SYSTEM (ENGINE AND VEHICULAR)																
		0607-LAMP ASSEMBLY 8376499																
X10		WASHER: lamp assembly hydraulic pump indicator (7358625)	ea	1													D-1	1
P-O	2540-119-3900	BRACKET: lamp assembly hydraulic pump indicator (7358623)	ea	1	*	*	*	*	*	*	*	*	*	*	0	0	D-1	2
P-O	5330-143-7002	GASKET: lamp assembly hydraulic pump indicator (11605388)	ea	1	*	*	*	*	*	*	*	*	*	*	0	0	D-1	3
P-O	5330-297-6329	GASKET: lamp assembly hydraulic pump indicator (7358626)	ea	1	*	*	*	*	*	*	1	*	*	1	6	18	D-1	4
P-O	6240-155-8707	LAMP: lamp assembly hydraulic pump indicator (96906-35231-1829)	ea	1	*	*	*	*	*	*	1	*	*	1	10	30	D-1	5
P-O	6210-299-5564	LENS ASSEMBLY (RED): lamp assembly hydraulic pump indicator (7358622)	ea	1	*	*	*	*	*	*	1	*	*	1	6	18	D-1	6
P-O	5975-588-0387	NUT lamp assembly hydraulic pump indicator (7358624)	ea	1	*	*	*	*	*	*	*	*	*	*	0	0	D-1	7
		0607 - LEAD ASSEMBLY 10951610																
P-0	5935-399-6676	TERMINAL ASSEMBLY: lead assembly control panel (8338564) - optional with	ea	2	*	*	*	*	*	*	1	*	*	1	12	36	D-2	1
P-O	1015-798-2997	TERMINAL ASSEMBLY: lead assembly control panel (7982997)	ea	2	*	*	*	*	*	*	1	*	*	1	12	36	D-2	1
P-O	5970-833-8562	SLEEVE: lead assembly control panel (8338562)	ea	2	*	*		*	*	*	1	*	*	1	12	36	D-2	2
P-O	5935-833-8561	SHELL: lead assembly control panel (8338561)	ea	2	*	*	*	*	*	*	1	*	*	1	12	36	D-2	3
P-O	6145-772-0853	CABLE: lead assembly control panel (approximate length 8.50 inches) (M13486 / 1-5)	ft.	≠	*	*	*	*	*	*	*	*	*	*	1	4	D-2	4
		0607 - LEAD ASSEMBLY 10951609																
P-O	5935-399-6676	TERMINAL ASSEMBLY: lead assembly control panel (8338564) - optional with	ea	2	*	*	*	*	*	*	1	*	*	1	12	36	D-3	1
P-O	1015-798-2997	TERMINAL ASSEMBLY: lead assembly control panel (7982997)	ea	2	*	*	*	*	*	*	1	*	*	1	12	36	D-3	1

(1) SMR CODE	(2) FEDERAL STOCK NO.	(3) DESCRIPTION	(4) UNIT OF MEAS-URE	(5) QTY. INC. IN UNIT	(6) ORGANIZATIONAL 15 DAY MAINT. ALLOWANCE				(7) DIRECT SUPPORT 30-DAY MAINT. ALLOWANCE			(8) GENERAL SUPPORT 30-DAY MAINT. ALLOWANCE			(9) 1 YR. ALW. PER 100 EQUIP/ CNTGCY PLAN-NING	(10) DEPOT MAINT. ALW PER 100 EQUIP	(11) ILLUS-TRATION	
					(A) 1-5	(B) 6-20	(C) 21-50	(D) 51-100	(A) 1-20	(B) 21-50	(C) 51-100	(A) 1-20	(B) 21-50	(C) 51-00			(A) FIG NO.	(B) ITEM NO.
		0607 - LEAD ASSEMBLY 10951609 --Continued																
P-O	5970-833-8562	SLEEVE: lead assembly control panel (8338562)	ea	2	*	*	*	*	*	*	1	*	*	1	12	36	D-3	2
P-O	5935-833-8561	SHELL: lead assembly control panel (8338561)	ea	2	*	*	*	*	*	*	1	*	*	1	12	36	D-3	3
P-O	6145-772-0853	CABLE: lead assembly control panel (approximate length 19 inches) (M 13486 / 1-5)	ft	≠	*	*	*	*	*	*	*	*	*	*	1	4	D-3	4
		0607- ELECTROMAGNETIC CLUTCH ELECTRICAL SYSTEM																
P-O	5930-296-6318	SWITCH ASSEMBLY: hydraulic pump (96906-39061-1)	ea	1	*	*	*	*	*	*	2	*	2	2	6	18	D-10	6
P-O	6210-699-9457	LAMP ASSEMBLY: hydraulic pump indicator (8376499)	ea	1	*	*	*	*	*	*	1	*	*	1	6	18	D-10	7
P-O	5925-026-4767	CIRCUIT BREAKER: control panel (96906-39062-1)	ea	*	*	*	*	*	*	*	1	*	*	1	6	18	D-10	12
		0608- ELECTROMAGNETIC CLUTCH ELECTRICAL SYSTEM																
P-O	5935-615-9985	CONNECTOR ASSEMBLY: control panel (7982404)	ea	1	*	*	*	*	*	*	1	*	*	1	6	18	D-10	8
		0609 - HEADLIGHT ADAPTER ASSEMBLY																
P-F	5935-485-8955	PIN: adapter headlight grommet (7716521)	ea	7					*	*	1	*	*	1	14	175	D-4	1
P-F	5935-772-3474	INSERT: headlamp holder (7723474)	ea	1					*	*	1	*	*	1	7	25	D-4	2
P-F	5305-576-0525	SCREW CAP HEXAGON HEAD: base and holder to adapter (96906-35292-8)l	ea	6					*	*	1	*	*	1	14	120	D-4	3
P-F	5310-194-1540	WASHER FLAT: base and holder to adapter (96906-15795-210)	ea	6					*	*	1	*	*	1	14	120	D-4	4
P-F	5330-297-7092	GASKET: headlamp (7970024)	ea	2					2	2	2	2	2	2	14	200	D-4	5
P-F	5310-012-1637	WASHER LOCK: base and holder to adapter (96906-35337-25)	ea	6					*	*	1			1	14	600	D-4	6
P-F	5310-543-4568	NUT PLAIN HEXAGON: base and holder to adapter (96906-35690-422)	ea	6					*	*	1	*	*	1	14	120	D-4	7
P-F		ADAPTER: headlamp complete (7383593)	ea	1					*	*	1	*	*	1	7	25	D-4	8
P-F	6220-179-8176	RING: headlamp mounting (7972330)	ea	1					*	*	1	*	*	1	7	25	D-4	9

(1) SMR CODE	(2) FEDERAL STOCK NO.	(3) DESCRIPTION	(4) UNIT OF MEAS-URE	(5) QTY. INC. IN UNIT	(6) ORGANIZATIONAL 15 DAY MAINT. ALLOWANCE				(7) DIRECT SUPPORT 30-DAY MAINT. ALLOWANCE			(8) GENERAL SUPPORT 30-DAY MAINT. ALLOWANCE			(9) 1 YR. ALW. PER 100 EQUIP/ CNTGCY PLAN-NING	(10) DEPOT MAINT. ALW PER 100 EQUIP	(11) ILLUS-TRATION (A) FIG NO.	(11) ILLUS-TRATION (B) ITEM NO.
					(A) 1-5	(B) 6-20	(C) 21-50	(D) 51-100	(A) 1-20	(B) 21-50	(C) 51-100	(A) 1-20	(B) 21-50	(C) 51-00				
		0609 - HEADLIGHT ADAPTER ASSEMBLY--Continued																
P-F	5310-797-2040	NUT MOUNTING: headlamp mounting (7972351}	ea	1					*	*	1	*	*	1	7	25	D-4	10
P-F		HOLDER: headlamp complete (7383590)	ea	1					*	*	1	*	*	1	7	25	D-4	11
P-F	5320-291-8428	RIVET: adapter headlamp (593377)	ea						*	*	*	*	*	*	*	5	D-4	12
P-F		BAND: headlamp base (96906-39020-1)	ea	7					*	*	1	*	*	1	14	175	D-4	13
P-F	2920-695-6223	ROD: headlamp approximate length 9/16 inch (7064704)	ea	≠					*	*	1	*	*	1	7	25	D-4	14
P-F	5340-772-2322	GROMMET: headlamp holder (7722322)	ea	1					*	*	1	*	*	1	7	25	D-4	15
P-F	6145-772-0853	CABLE: base assembly 7 pieces approximate length 21 inches (M 13486 / 1-5)	ft.	≠					*	*	1	*	*	1	12	36	D-4	16
P-F	5340-772-2322	GROMMET: headlamp base (7722322)	ea	1					*	*	1	*	*	1	7	25	D-4	17
P-F		ROD: headlamp base (approximate length 9/16 inch) (8724763)	ea	1					*	*	1	*	*	1	7	50	D-4	18
P-O	5305-022-8288	SCREW LOCKWASHER: headlamp base (228288)*1725	ea	2					*	*	1	*	*	1	14	50	D-4 D-4	19 20
P-O	5340-647-3933	SPRING: headlamp base (7739925)	ea	1					*	*	1	*	*	1	7	25	D-4	20
X10		BASE: headlamp (7972355)	ea	1													D-4	21
P-F	5935-771-8192	INSERT: headlamp base (7723475)	ea	1					*	*	1	*	*	1	7	25	D-4	22
P-F	5935-485-8954	SOCKET: headlamp base (7716520)	ea	7					*	*	1	*	*	1	14	175	D-4	23
P-F	2590-047-4096	GASKET: headlamp base (7972333)	ea	1					*	*	1	*	*	1	7	100	D-4	24
P-F	6220-709-1836	BASE ASSEMBLY: headlamp (7972352)	ea	1					*	*	1	*	*	1	7	25	D-4	-
P-O	6220-647-3935	ADAPTER ASSEMBLY :headlight mounting (7383591)	ea	2	*	*	*	*	*	*	1	*	*	1	14	50	D-7	4
		0613 - LEAD ASSEMBLY 10951611																
P-O	5935-789-6085	SHELL ASSEMBLY: lead assembly power take-off to bulkhead (8724198)	ea	1	*	*	*	*	*	*	1	*	*	1	8	24	D-5	1
P-O	5975-697-6991	NUT COUPLING: lead assembly power take-off the bulkhead (7527643)	ea	1	*	*	*	*	*	*	1	*	*	1	8	24	D-5	2
P-O	5340-772-2343	GROMMET: lead assembly power take-off to bulkhead (7722343)	ea	1	*	*	*	*	*	*	1	*	*	1	8	24	D-5	3
P-O	5935-333-3088	NUT: lead assembly power take-off to bulkhead (7723306)	ea	1	*	*	*	*	*	1	*	*	*	1	8	24	D-5	4
P-O	9905-752-4649	BAND: circuit number lead assembly power take-off to bulkhead (96906-39020-1)	ea	2	*	*	*	*	*	*	*	*	*	*	4	*	D-5	5
P-O	9905-935-7672	BAND: part number lead assembly power take-off to bulkhead (10864355)	ea	1	*	*	*	*	*	*	*	*	*	*	4	*	D-5	6

(1) SMR CODE	(2) FEDERAL STOCK NO.	(3) DESCRIPTION	(4) UNIT OF MEAS-URE	(5) QTY. INC. IN UNIT	(6) ORGANIZATIONAL 15 DAY MAINT. ALLOWANCE				(7) DIRECT SUPPORT 30-DAY MAINT. ALLOWANCE			(8) GENERAL SUPPORT 30-DAY MAINT. ALLOWANCE			(9) 1 YR. ALW. PER 100 EQUIP/ CNTGCY PLAN-NING	(10) DEPOT MAINT. ALW PER 100 EQUIP	(11) ILLUS-TRATION	
					(A) 1-5	(B) 6-20	(C) 21-50	(D) 51-100	(A) 1-20	(B) 21-50	(C) 51-100	(A) 1-20	(B) 21-50	(C) 51-00			(A) FIG NO.	(B) ITEM NO.
		0613 - LEAD ASSEMBLY 10951611 -Continued																
P-O	6145-772-0853	CABLE: lead assembly power take-off to bulkhead approximate length 77 inches(M 13486/1-5)	ft.	≠	*	*	*	*	*	*	*	*	*	*	1	*	D-5	7
P-O	5935-572-9180	SHELL: lead assembly power take-off to BULKHEAD (8338566)	ea	1	*	*	*	*	*	*	1	*	*	1	8	24	D-5	8
P-O	5310-833-8567	WASHER: lead assembly power take-off to bulkhead (8338567)	ea	1	*	*	*	*	*	*	1	*	*	1	8	24	D-5	9
P-O	5940-057-2929	PIN CONTACT: lead assembly power take-off to bulkhead (96906-27148-2)	ea	1	*	*	*	*	*	*	1	*	*	1	8	24	D-5	10
		0616 - LEAD ASSEMBLY 10951612																
P-O	5940-057-2929	PIN CONTACT: lead assembly power take-off control panel to bulkhead (96906-27148-2)	ea	1	*	*	*	*	*	*	1	*	*	1	8	24	D-6	1
P-O	5310-833-8567	WASHER: lead assembly power take-off control panel to bulkhead (8338567)	ea	1	*	*	*	*	*	*	1	*	*	1	8	24	D-6	2
P-O	5935-572-9180	SHELL: lead assembly power take-off control panel to bulkhead (8338566)	ea	1	*	*	*	*	*	*	1	*	*	1	6	18	D-6	3
P-O	9905-752-4649	BAND: stamp " E" lead assembly power take-off control panel to bulkhead (1) circuit number lead assembly power take-off control panel to bulkhead (30 (960906-39020-1)	ea	4	*	*	*	*	*	*	*	*	*	*	4	*	D-6	4
P-O	9905-935-7672	BAND: part number lead assembly power take-off control panel to bulkhead (10864355)	ea	1	*	*	*	*	*	*	*	*	*	*	4	*	D-6	5
P-O	6145-772-0853	CABLE: lead assembly power take-off control panel to bulkhead (approximate length 136 inches) (M 13486/1-5)	ft.	≠	*	*	*	*	*	*	*	*	*	*	1	*	D-6	6
P-O	5935-833-8561	SHELL: lead assembly power take-off control panel to bulkhead (8338561)	ea	1	*	*	*	*	*	*	1	*	*	1	6	18	D-6	7
P-O	5970-833-8562	SLEEVE: lead assembly power take-off control panel to bulkhead (8338562)	ea	1	*	*	*	*	*	*	1	*	*	1	6	18	D-6	8
P-O	5935-399-6676	TERMINAL ASSEMBLY: lead assembly power take-off control panel to bulkhead (8338564)	ea	1	*	*	*	*	*	*	1	*	*	1	6	18	D-6	9

(1) SMR CODE	(2) FEDERAL STOCK NO.	(3) DESCRIPTION	(4) UNIT OF MEAS-URE	(5) QTY. INC. IN UNIT	(6) ORGANIZATIONAL 15 DAY MAINT. ALLOWANCE				(7) DIRECT SUPPORT 30-DAY MAINT. ALLOWANCE			(8) GENERAL SUPPORT 30-DAY MAINT. ALLOWANCE			(9) 1 YR. ALW. PER 100 EQUIP/ CNTGCY PLAN-NING	(10) DEPOT MAINT. ALW PER 100 EQUIP	(11) ILLUS-TRATION	
					(A) 1-5	(B) 6-20	(C) 21-50	(D) 51-100	(A) 1-20	(B) 21-50	(C) 51-100	(A) 1-20	(B) 21-50	(C) 51-00			(A) FIG NO.	(B) ITEM NO.
		0613 - LEAD ASSEMBLY 10951612 -Continued																
P-O	1015-709-2997	TERMINAL ASSEMBLY: lead assembly power take-off control panel to bulkhead (7982997)	ea	1	*	*	*	*	*	*	1	*	*	1	6	18	D-6	9
		0613 - ELECTROMAGNETIC CLUTCH ELECTRICAL SYSTEM																
P-O		LEAD ASSEMBLY: control panel (10951610)	ea	2	*	*	*	*	*	*	1	*	*	1	12	36	D-10	9
P-O		LEAD ASSEMBLY: power take-off control panel to bulkhead (10951612)	ea	1	*	*	*	*	*	*	1	*	*	1	6	18	D-10	15
P-O		LEAD ASSEMBLY: power take-off to bulkhead (10951611)	ea	1	*	*	*	*	*	*	1	*	*	1	6	18	D-10	16
		0618 - ELECTROMAGNETIC CLUTCH ELECTRICAL SYSTEM																
P-O		LEAD ASSEMBLY: control panel (10951609)	ea	1	*	*	*	*	*	*	1	*	*	1	6	18	D-10	13
		GROUP - 18- BODY, CAB, HOOD, AND HULL																
		1802 - HEADLIGHT ASSEMBLY																
P-O		SUPPORT ASSEMBLY: left headlamp guard (11645105-11)	ea	1	*	*	*	*	*	*	1	*	*	1	7	50	D-7	1
P-O		SUPPORT ASSEMBLY: right headlamp guard (11645105-2)	ea	1	*	*	*	*	*	*	1	*	*	1	7	50	D-7	1
P-O		GUARD ASSEMBLY: left and right headlight (11645118)	ea	2	*	*	*	*	*	*	1	*	*	1	7	100	D-7	2
P-O	5306-938-1643	BOLT: head guard to left and right guard support (10887246)	ea	4	*	*	*	*	*	*	1	*	*	1	14	100	D-7	3
P-O	5310-080-6004	WASHER FLAT ROUND: headlamp guard to left and right guard support (96906-27183-14)	ea	4	*	*	*	*	*	*	1	*	*	1	14	200	D-7	5
P-O	5310-637-9541	WASHER, LOCK: headlamp guard to left and right guard support (96906-35338-46)	ea	4	*	*	*	*	*	*	1	*	*	1	14	400	D-7	6

(1) SMR CODE	(2) FEDERAL STOCK NO.	(3) DESCRIPTION	(4) UNIT OF MEAS-URE	(5) QTY. INC. IN UNIT	(6) ORGANIZATIONAL 15 DAY MAINT. ALLOWANCE				(7) DIRECT SUPPORT 30-DAY MAINT. ALLOWANCE			(8) GENERAL SUPPORT 30-DAY MAINT. ALLOWANCE			(9) 1 YR. ALW. PER 100 EQUIP/ CNTGCY PLAN-NING	(10) DEPOT MAINT. ALW PER 100 EQUIP	(11) ILLUS-TRATION	
					(A) 1-5	(B) 6-20	(C) 21-50	(D) 51-100	(A) 1-20	(B) 21-50	(C) 51-100	(A) 1-20	(B) 21-50	(C) 51-00			(A) FIG NO.	(B) ITEM NO.
		1802 - HEADLIGHT ASSEMBLY -Continued																
P-O	5310-647-3934	WING NUT: headlamp guard to left and right guard support (7383581)	ea	4	*	*	*	*	*	*	1	*	*	1	14	200	D-7	7
P-O	5315-842-3044	PIN COTTER: headlamp guard to left and right guard support (96906-24665-283)	ea	4	*	*	*	*	*	*	1	*	*	1	14	400	D-7	8
X20		SUPPORT ASSEMBLY: left headlamp guard (11645093-1)	ea	1	*	*	*	*	*	*	*	*	*	*	0	0	D-7	9
X20		SUPPORT ASSEMBLY: right headlamp guard (11645093-2)	ea	1	*	*	*	*	*	*	*	*	*	*	0	0	D-7	9
		GROUP-20- HOIST, WINCH, CAPSTAN, WINDLASS POWER CONTROL UNIT, AND POWER TAKE-OFF																
		2002 - CONTROL LINKAGE																
P-O	5310-975-2075	NUT: control linkage rod (96906-35691-21)	ea	8	*	*	*	*	*	*	1	*	*	1	14	144	D-8	1
P-O		BALL JOINT: control linkage rod (190136)	ea	4	*	*	*	*	*	*	1	*	*	1	14	72	D-8	2
P-O		ROD: control linkage (7699839)	ea	1	*	*	*	*	*	*	1	*	*	1	6	18	D-8	3
P-O	5306-225-8496	SCREW CAP HEXAGON HEAD: control. linkage lever to pad (96906-90725-31)	ea	1	*	*	*	*	*	*	1	*	*	1	6	18	D-8	4
P-O	5310-407-9566	WASHER, LOCK: control linkage lever to pad (96906-35338-45)	ea	1	*	*	*	*	*	*	1	*	*	1	6	18	D-8	5
P-O	5310-087-7493	WASHER: control linkage lever to pad (96906-27183-13)	ea	1	*	*	*	*	*	*	1	*	*	1	6	18	D-8	6
P-O		ROD: control linkage (7699840)	ea	1	*	*	*	*	*	*	*	*	*	*	6	18	D-8	7
X20		PAD: control linkage lever mounting (7699342)	ea	1	*	*	*	*	*	*	*	*	*	*	0	0	D-8	8
P-O		LEVER ASSEMBLY: control linkage (7699936)	ea	1	*	*	*	*	*	*	1	*	*	1	6	18	D-8	9
P-O	3120-656-4947	BEARING: control linkage (7699876)	ea	1	*	*	*	*	*	*	1	*	*	1	6	18	D-8	10
P-O		LEVER: control linkage (7699845)	ea	1	*	*	*	*	*	*	1	*	*	1	6	18	D-8	11
		2002 - CONTROL BOX ASSEMBLY																
P-O	5315-990-2973	KEY: handle control lever position (96906-20066-120)	ea	1	*	*	*	*	*	*	1	*	*	1	6	18	D-9	1
P-O	2590-656-3603	LEVER: handle control (7699903)	ea	1	*	*	*	*	*	*	1	*	*	1	6	18	D-9	2

(1) SMR CODE	(2) FEDERAL STOCK NO.	(3) DESCRIPTION	(4) UNIT OF MEAS-URE	(5) QTY. INC. IN UNIT	(6) ORGANIZATIONAL 15 DAY MAINT. ALLOWANCE				(7) DIRECT SUPPORT 30-DAY MAINT. ALLOWANCE			(8) GENERAL SUPPORT 30-DAY MAINT. ALLOWANCE			(9) 1 YR. ALW. PER 100 EQUIP/ CNTGCY PLAN-NING	(10) DEPOT MAINT. ALW PER 100 EQUIP	(11) ILLUS-TRATION (A) FIG NO.	(B) ITEM NO.
					(A) 1-5	(B) 6-20	(C) 21-50	(D) 51-100	(A) 1-20	(B) 21-50	(C) 51-100	(A) 1-20	(B) 21-50	(C) 51-00				
		2002 - CONTROL BOX ASSEMBLY--Continued																
P-O	5305-225-3840	SCREW CAP HEXAGON HEAD: handle control lever to shaft (1) lever control handle to shaft (1) (96906-90725-7)	ea	2	*	*	*	*	*	*	1	*	*	1	6	18	D-9	3
P-O	5310-582-5965	WASHER, LOCK: handle control lever to shaft (1) lever control handle to shaft (1) control handle indicator pointer to shaft (1) (96906-35338-44)	ea	3	*	*	*	*	*	*	1	*	*	1	6	100	D-9	4
P-O	5310-834-8736	NUT: control handle indicator pointer to shaft (96906-35691-2)	ea	1	*	*	*	*	*	*	1	*	*	1	6	18	D-9	5
P-O	5310-809-4058	WASHER: control handle indicator pointer to shaft (96906-27183-10)	ea	2	*	*	*	*	*	*	1	*	*	1	12	36	D-9	6
P-O		POINTER: control handle indicator (10863975)	ea	1	*	*	*	*	*	*	1	*	*	1	6	18	D-9	7
P-O	2590-656-3604	SHAFT: control handle lever (7699945)	ea	1	*	*	*	*	*	*	1	*	*	1	6	18	D-9	8
P-O	2590-656-3605	HANDLE: lever control (7699946)	ea	1	*	*	*	*	*	*	1	*	*	1	6	18	D-9	9
P-O	5310-809-3078	WASHER: lever control handle to shaft (96906-27183-11)	ea	1	*	*	*	*	*	*	1	*	*	1	6	18	D-9	10
P-O	5305-071-2239	SCREW CAP HEXAGON HEAD: control handle indicator pointer to shaft (96906-90725-12)	ea	1	*	*	*	*	*	*	1	*	*	1	6	18	D-9	11
P-O	5310-851-2682	NUTJAM: control handle to blocks (96906-35691-17)	ea	4	*	*	*	*	*	*	1	*	*	1	14	72	D-9	12
P-O	5310-637-9541	WASHER, LOCK: control handle to blocks: (96906-35338-46)	ea	2	*	*	*	*	*	*	1	*	*	1	12	200	D-9	13
P-O	5307-656-4948	STUD: control handle to blocks (7699852)	ea	2	*	*	*	*	*	*	1	*	*	1	12	36	D-9	14
P-O	5305-622-1509	SCREW: control handle moldboard designation plate to box (96906-35224-63)	ea	2	*	*	*	*	*	*	1	*	*	1	12	36	D-9	15
P-O	5310-045-3296	WASHER, LOCK: control handle moldboard designation plate to box (96906-35338-43)	ea	2	*	*	*	*	*	*	1	*	*	1	12	200	D-9	16
P-O		PLATE: control handle moldboard designation (10863976)	ea	1	*	*	*	*	*	*	*		*	*	5	*	D-9	17
P-O	5340-442-5845	RING SNAP: shaft to box (96906-16633-1050)	ea	1	*	*	*	*	*	*	1	*	*	1	6	18	D-9	18
P-O		BOX ASSEMBLY: control handle (7699959)	ea	1	*	*	*	*	*	*	1	*	*	1	6	18	D-9	19
P-O	3120-656-4945	BEARING: control handle bottom(7699875)	ea	1	*	*	*	*	*	*	1	*	*	1	6	18	D-9	20

(1) SMR CODE	(2) FEDERAL STOCK NO.	(3) DESCRIPTION	(4) UNIT OF MEAS-URE	(5) QTY. INC. IN UNIT	(6) ORGANIZATIONAL 15 DAY MAINT. ALLOWANCE				(7) DIRECT SUPPORT 30-DAY MAINT. ALLOWANCE			(8) GENERAL SUPPORT 30-DAY MAINT. ALLOWANCE			(9) 1 YR. ALW. PER 100 EQUIP/ CNTGCY PLAN-NING	(10) DEPOT MAINT. ALW PER 100 EQUIP	(11) ILLUS-TRATION	
					(A) 1-5	(B) 6-20	(C) 21-50	(D) 51-100	(A) 1-20	(B) 21-50	(C) 51-100	(A) 1-20	(B) 21-50	(C) 51-00			(A) FIG NO.	(B) ITEM NO.
		2002 - CONTROL BOX ASSEMBLY --Continued																
P2F		BOX ASSEMBLY: control handle (7699944)	ea	1					*	*	*	*	*	*	3	*	D-9	21
P-O	3120-656-4946	BEARING: control handle top (7699874)	ea	1	*	*	*	*	*	*	1	*	*	1	6	18	D-9	22
		2004- POWER TAKE-OFF ASSEMBLY																
P-O	5305-984-6193	SCREW: hydraulic pump indicator switch (2) hydraulic pump switch (2) (96906-35206-245)	ea	4	*	*	*	*	*	*	1	*	*	1	12	36	D-10	1
P-O	5310-045-3299	WASHER, LOCK: hydraulic pump switch (2) hydraulic indicator pump switch (2) control panel circuit breaker (2) (96906-35338-42)	ea	6	*	*	*	*	*	*	1	*	*	1	12	200	D-10	2
X20		BRACKET: hydraulic pump control panel (11637369)	ea	1	*	*	*	*	*	*	*	*	*	*	0	0	D-10	3
P-O	5305-984-6209	SCREW: control panel bracket (96906-35206-262)	ea	2	*	*	*	*	*	*	1	*	*	1	12	36	D-10	4
P-O	5310-045-3296	WASHER, LOCK: control panel bracket (96906-35338-43)	ea	2	*	*	*	*	*	*	1	*	*	1	12	200	D-10	5
P-O	5310-012-0622	NUT: control panel circuit breaker (96906-35649-82)	ea	2	*	*	*	*	*	*	1	*	*	1	12	36	D-10	10
P-O	5305-984-6196	SCREW: control panel circuit breaker (96906-35206-248)	ea	2	*	*	*	*	*	*	1	*	*	1	12	36	D-10	11
P-O	5310-012-0361	NUT: control panel bracket (96906-35649-102)	ea	2	*	*	*	*	*	*	1	*	*	1	12	36	D-10	14
		2004- POWER TAKE-OFF ASSEMBLY AND MOUNTING BRACKETS																
A-F		SPROCKET ASSEMBLY: power take-off (7699894)	ea	1													D-11	1
P-F	2520-653-9220	SPROCKET: transmission (7699964)	ea	1					*	2	2	*	2	2	6	18	D-11	2
P-F	3020-653-9535	CHAIN: sprocket (7044246)	ea	1					*	*	1	*	*	1	6	18	D-11	3
P-F	2520-653-9213	SPROCKET: mount (7699927)	ea	1					*	2	2	*	2	2	6	18	D-11	4
P-F	5340-178-3740	RING ASSEMBLY: sprocket (10940666)	ea	1					*	*	1	*	*	1	6	18	D-11	5
P-F		GASKET: transmission cover (1) right angle drive (1) (11645641)	ea	2					*	2	2	*	2	2	6	100	D-11	6

(1) SMR CODE	(2) FEDERAL STOCK NO.	(3) DESCRIPTION	(4) UNIT OF MEAS-URE	(5) QTY. INC. IN UNIT	(6) ORGANIZATIONAL 15 DAY MAINT. ALLOWANCE				(7) DIRECT SUPPORT 30-DAY MAINT. ALLOWANCE			(8) GENERAL SUPPORT 30-DAY MAINT. ALLOWANCE			(9) 1 YR. ALW. PER 100 EQUIP/ CNTGCY PLAN-NING	(10) DEPOT MAINT. ALW PER 100 EQUIP	(11) ILLUS-TRATION	
					(A) 1-5	(B) 6-20	(C) 21-50	(D) 51-100	(A) 1-20	(B) 21-50	(C) 51-100	(A) 1-20	(B) 21-50	(C) 51-00			(A) FIG NO.	(B) ITEM NO.
		2004 - POWER TAKE-OFF ASSEMBLY AND MOUNTING BRACKETS --Continued																
P-F	5310-809-4085	WASHER: power take-off to transmission (96906-27183-16)	ea	5					*	*	1	*	*	1	14	90	D-11	7
P-F	5310-209-0965	WASHER, LOCK: power take-off to transmission (96906-35338-47)	ea	5					*	*	1	*	*	1	14	500	D-11	8
P-F	5305-709-8526	SCREW CAP HEXAGON HEAD: power take-off to transmission (96906-90727-92)	ea	5					*	*	1	*	*	1	14	90	D-11	9
P-F	5306-051-4076	SCREW CAP HEXAGON HEAD: sprocket ring (96906-90727-34)	ea	2					*	*	1	*	*	1	12	36	D-11	10
P-F	5310-407-9566	WASHER, LOCK: sprocket ring (96906-35338-45)	ea	2					*	*	1	*	*	1	12	200	D-11	11
P-F		POWERTAKE-OFFASSEMBLY: transmission (10940668)	ea	1					*	2	2	*	2	2	6	18	D-11	12
P-O	5310-732-0560	NUT: mount power take-off (96906-51968-14)	ea	2	*	*	*	*	*	*	1	*	*	1	12	36	D-11	13
P-O	5305-719-5238	SCREW CAP HEXAGON HEAD: mount power take-off (2) hydraulic line brace (2) (96906-90727-115)	ea	4	*	*	*	*	*	*	1	*	*	1	12	36	D-11	14
P-O	5310-584-5272	WASHER, LOCK: mount power take-off (2) power take-off bracket (2) hydraulic line brace (2) (96906-35338-48)	ea	6	*	*	*	*	*	*	1	*	*	1	12	200	D-11	5
P-O	5310-809-5998	WASHER: mount power take-off (2) hydraulic line brace (2) (96906-27183-18)	ea	4	*	*	*	*	*	*	1	*	*	1	12	36	D-11	16
P-F		BRACKET: power take-off mounting (10940698)	ea	1					*	*	*	*	*	*	5	*	D-11	17
P-O	5305-719-5235	SCREW CAP HEXAGON HEAD: power take-off bracket (96906-90727-114)	ea	2	*	*	*	*	*	*	1	*	*	1	14	72	D-11	18
X2F		BRACE ASSEMBLY: hydraulic line (11645203)	ea	1					*	*	*	*	*	*	0	0	D-11	19
P-O	5340-769-8818	SPACER: power take-off bracket (7699818)	ea	4	*	*	*	*	*	*	1	*	*	1	14	72	D-11	20
P-H		POWERTAKE-OFFASSEMBLY: (10940662)	ea	1								*	2	2	6	18	D-12	1
P-H	2520-902-8483	SEAL: power take-off gear (10940820)	ea	1								*	2	2	6	100	D-12	2
P-H	5330-653-9544	GASKET: power take-off to clutch housing (7383695)	ea	1								*	2	2	6	18	D-12	3

(1) SMR CODE	(2) FEDERAL STOCK NO.	(3) DESCRIPTION	(4) UNIT OF MEAS-URE	(5) QTY. INC. IN UNIT	(6) ORGANIZATIONAL 15 DAY MAINT. ALLOWANCE				(7) DIRECT SUPPORT 30-DAY MAINT. ALLOWANCE			(8) GENERAL SUPPORT 30-DAY MAINT. ALLOWANCE			(9) 1 YR. ALW. PER 100 EQUIP/ CNTGCY PLAN-NING	(10) DEPOT MAINT. ALW PER 100 EQUIP	(11) ILLUS-TRATION	
					(A) 1-5	(B) 6-20	(C) 21-50	(D) 51-100	(A) 1-20	(B) 21-50	(C) 51-100	(A) 1-20	(B) 21-50	(C) 51-00			(A) FIG NO.	(B) ITEM NO.
		2004 - POWERTAKE-OFF ASSEMBLY AND MOUNTING BRACKETS --Continued																
P-O	4730-826-6465	FITTING: power take-off relief plug (96906-356710-2)	ea	1	*	*	*	*	*	*	1	*	*	1	6	18	D-12	4
P-O	5340-983-7208	PLUG: power take-off relief fitting (10940663)	ea	1	*	*	*	*	*	*	1	*	*	1	6	18	D-12	5
P-O	5330-834-2912	GASKET: power take-off relief plug (96906-35769-18)	ea	1	*	*	*	*	*	*	1	*	*	1	6	18	D-12	6
P-O	4730-221-2137	PLUG: transmission oil level (96906-20913-2S)	ea	1	*	*	*	*	*	*	1	*	*	1	6	18	D-12	7
P-H	2520-178-0466	HOUSING ASSEMBLY: magnetic clutch (10940660)	ea	1								*	*	*	5	*	D-12	8
X1H		HOUSING: magnetic clutch (10940673)	ea	1													D-12	9
P-F	5307-903-6655	STUD: housing assembly magnetic clutch (10940661)	ea	8					*	*	1	*	*	1	14	144	D-12	10
P-H	2520-907-9002	GASKET: clutch housing (10940670)	ea	1								*	2	2	6	100	D-12	11
P-H	2520-178-0465	SPIDER: clutch (10940754)	ea	1								*	2	2	6	18	D-12	12
P-H	5310-637-9541	WASHER, LOCK: spider to gear set (96906-35338-46)	ea	1								*	*	1	6	18	D-12	13
P-H	5305-269-4511	SCREW: spider to gear set (96906-90725-63)	ea	1								*	*	1	6	18	D-12	14
P-H	2520-907-9004	GASKET: clutch to pump (10940669)	ea	1								*	2	2	6	100	D-12	15
P-H		STUD: pump to clutch (10940672)	ea	6								*	*	1	14	108	D-12	16
P-H	5310-407-9566	WASHER, LOCK: pump to clutch (6) clutch to housing (8) power take-off to clutch housing (6} (96906-35338-45)	ea	20								*	*	1	14	600	D-12	17
P-H	5310-732-0558	NUT: pump to clutch (96906-51968-8)	ea	6								*	*	1	14	108	D-12	18
P-H	5310-880-7746	NUT: clutch to housing (96906-51968-5)	ea	8								*	*	1	14	144	D-12	19
P-H	5310-820-6653	WASHER, LOCK: pump to bracket (96906-35338-50)	ea	2								*	*	1	12	200	D-12	20
P-H	5310-763-8905	NUT: pump to bracket (96906-51968-20)	ea	2								*	*	1	12	36	D-12	21
X2H		BRACKET: hydraulic pump mounting (10940671)	ea	1								*	*	*	0	0	D-12	22
P-H		PUMP HYDRAULIC: power take-off (10951689)	ea	1								*	2	2	6	18	D-12	23
P-H	2520-907-8971	CLUTCH ASSEMBLY: power take-off (10940771)	ea	1								*	2	2	6	18	D-12	24

(1) SMR CODE	(2) FEDERAL STOCK NO.	(3) DESCRIPTION	(4) UNIT OF MEAS-URE	(5) QTY. INC. IN UNIT	(6) ORGANIZATIONAL 15 DAY MAINT. ALLOWANCE				(7) DIRECT SUPPORT 30-DAY MAINT. ALLOWANCE			(8) GENERAL SUPPORT 30-DAY MAINT. ALLOWANCE			(9) 1 YR. ALW. PER 100 EQUIP/ CNTGCY PLAN-NING	(10) DEPOT MAINT. ALW PER 100 EQUIP	(11) ILLUS-TRATION	
					(A) 1-5	(B) 6-20	(C) 21-50	(D) 51-100	(A) 1-20	(B) 21-50	(C) 51-100	(A) 1-20	(B) 21-50	(C) 51-00			(A) FIG NO.	(B) ITEM NO.
		2004 - POWER TAKE-OFF ASSEMBLY AND MOUNTING BRACKETS --Continued																
P-O	4730-278-6343	PLUG: clutch drain (502400)	ea	1	*	*	*	*	*	*	1	*	*	1	6	18	D-12	25
P-H	5306-225-9081	SCREW CAP HEXAGON HEAD: power take-off to clutch housing (96906-90725-36)	ea	6								*	*	1	14	108	D-12	26
		2004- RIGHT ANGLE DRIVE																
P-H	5305-043-6680	SCREW: pinion retainer ring (96906-35226-30)	ea	2								2	2	2	12	18	D-13	1
P-H	5310-045-4007	WASHER, LOCK: pinion retainer ring (96906-35338-41)	ea	2								2	2	2	12	200	D-13	2
P-H	2520-653-9212	RING: pinion (7383693)	ea	1								*	2	2	6	18	D-13	3
P-H	2520-653-9215	RETAINER: pinion bearing (7383697)	ea	1								*	*	1	6	18	D-13	4
P-H	2590-707-8823	SEAL: pinion bearing (8728125)	ea	1								*	2	2	6	100	D-13	5
P-H	5330-582-1560	PACKING: (96906-28775-235)	ea	1								*	2	2	6	100	D-13	6
P-H	5340-664-2079	SNAP RING: pinion bearing (586325)	ea	1								*	2	2	6	18	D-13	7
P-H	3110-156-4704	BEARING: pinion gear (714248)	ea	1								*	2	2	6	18	D-13	8
P-H	5340-275-6104	SNAP RING: pinion bearing (586229)	ea	1								*	2	2	6	18	D-13	9
P-H		GEAR SET: power take-off right angle drive (10940664)	ea	1								*	2	2	6	18	D-13	10
P-H	3110-120-3096	BEARING: pinion (709513)	ea	2								2	2	2	12	36	D-13	11
X1H		HOUSING: power take-off right angle drive (7383723)	ea	1													D-13	12
P-H	5330-653-9545	GASKET: cover plate (7699891)	ea	1									2	2	6	100	D-13	13
P-H		PLATE, COVER: power take-off right angle drive (10873964)	ea	1								*	*	*	5	*	D-13	14
P-H	5310-407-9566	WASHER, LOCK: housing cover (96906-35338-45)	ea	6								*	*	1	14	600	D-13	15
P-H	5306-225-8499	SCREW CAP HEXAGON HEAD: housing cover. (96906-90725-34)	ea	6								2	3	5	36	108	D-13	16
P-O	4730-826-6465	FITTING: lubrication (96906-35670-2)	ea	1	*	*	*	*	*	*	1	*	*	1	6	18	D-13	17
P-O	5340-903-7208	PLUG: lubrication fitting (10940663)	ea	1	*	*	*	*	*	*	1	*	*	1	6	18	D-13	18
P-O	5330-834-2912	GASKET PLUG: (96906-35769-18)	ea	1	*	*	*	*	*	*	1	*	*	1	6	18	D-13	19
P-H	5340-200-9528	SNAP RING: bearing (586272)	ea	1								*	2	2	6	18	D-13	20
P-H	3110-156-4712	BEARING: gear (714249)	ea	1								*	2	2	6	18	D-13	21
P-H	5340-200-7099	SNAP RING: bearing (586328)	ea	1								*	2	2	6	18	D-13	22

(1) SMR CODE	(2) FEDERAL STOCK NO.	(3) DESCRIPTION	(4) UNIT OF MEAS-URE	(5) QTY. INC. IN UNIT	(6) ORGANIZATIONAL 15 DAY MAINT. ALLOWANCE				(7) DIRECT SUPPORT 30-DAY MAINT. ALLOWANCE			(8) GENERAL SUPPORT 30-DAY MAINT. ALLOWANCE			(9) 1 YR. ALW. PER 100 EQUIP/ CNTGCY PLAN-NING	(10) DEPOT MAINT. ALW PER 100 EQUIP	(11) ILLUS-TRATION (A) FIG NO.	(B) ITEM NO.
					(A) 1-5	(B) 6-20	(C) 21-50	(D) 51-100	(A) 1-20	(B) 21-50	(C) 51-100	(A) 1-20	(B) 21-50	(C) 51-00				
		2004 - RIGHT ANGLE DRIVE -Continued																
P-H		RETAINER ASSEMBLY: power take-off right angle drive (7383692)	ea	1								*	2	2	6	18	D-13	23
P-O	4730-278-6343	PLUG: housing unit (502400)	ea	1	*	*	*	*	*	*	1	*	*	1	6	18	D-13	24
P-O	4730-221-2137	PLUG: oil level (96906-20913-2S)	ea	1	*	*	*	*	*	*	1	*	*	1	6	18	D-13	25
		2004 - CLUTCH ASSEMBLY POWER TAKE-OFF																
P-H	2520-903-6668	RING: bearing shaft (10940789)	ea	1								*	2	2	6	18	D-14	1
P-H	5340-664-2079	SNAP RING: clutch shaft bearing (586325)	ea	1								*	2	2	6	18	D-14	2
P-H		BEARING: clutch shaft (10947118)	ea	1								*	2	2	6	18	D-14	3
P-H	2520-907-1003	SHAFT: clutch (10940713)	ea	1								*	2	2	6	18	D-14	4
P-H		KEY: shaft (96906-20066-255)	ea	1								*	2	2	6	18	D-14	5
P-H		BEARING: clutch shaft (10951608)	ea	1								*	2	2	6	18	D-14	6
P-H	5340-201-0202	SNAP RING: clutch shaft bearing (586322)	ea	1								*	2	2	6	18	D-14	7
P-H		CLUTCH ASSEMBLY: (10940623)	ea	1								*	*	2	6	18	D-14	8
		2004 - HYDRAULIC PUMP ASSEMBLY																
P-H	5340-738-2936	RING RETAINER: pump assembly (8395435)	ea	1								*	2	2	6	18	D-15	1
P-H	3805-588-1164	SEAT: pump assembly (8395433)	ea	1								*	2	2	6	18	D-15	2
P-H	5340-375-1448	RING RETAINING: pump assembly (8395443)	ea	1								*	2	2	6	18	D-15	3
P-H	3110-588-1137	BEARING BALL ANNULAR: pump assembly (8395428)	ea	2								2	2	2	12	36	D-15	4
P-H		GEAR: pump assembly drive (8395436)	ea	1								*	2	2	6	18	D-15	5
P-H		WEAR PLATE: pump assembly (8395437)	ea	2								2	2	2	12	36	D-15	6
P-H		GASKET METALLIC: pump assembly (8395439)	ea	=								*	2	2	6	100	D-15	7
P-H	2590-862-2681	GASKET METALLIC: pump assembly (8395440)	ea	=								*	2	2	6	100	D-15	8
P-H	4730-329-7098	BOLT: pump assembly (138383)	ea	4								2	2	2	24	72	D-15	9
P-H	2590-707-1247	PACKING PREFORMED: pump assembly (10870588)	ea	2								2	2	2	12	200	D-15	10
P-H	2540-707-1242	GEAR SPUR:pump assembly (8395438)	ea	1								*	2	2	6	18	D-15	11
P-H	3805-588-1163	SEAT PLAIN:pump assembly (8395432)	ea	1								*	2	2	6	100	D-15	12

(1) SMR CODE	(2) FEDERAL STOCK NO.	(3) DESCRIPTION	(4) UNIT OF MEAS-URE	(5) QTY. INC. IN UNIT	(6) ORGANIZATIONAL 15 DAY MAINT. ALLOWANCE				(7) DIRECT SUPPORT 30-DAY MAINT. ALLOWANCE			(8) GENERAL SUPPORT 30-DAY MAINT. ALLOWANCE			(9) 1 YR. ALW. PER 100 EQUIP/ CNTGCY PLAN-NING	(10) DEPOT MAINT. ALW PER 100 EQUIP	(11) ILLUS-TRATION (A) FIG NO.	(B) ITEM NO.
					(A) 1-5	(B) 6-20	(C) 21-50	(D) 51-100	(A) 1-20	(B) 21-50	(C) 51-100	(A) 1-20	(B) 21-50	(C) 51-00				
		2006- CYLINDER ARMOR GUARDS RIGHT AND LEFT																
X20		GUARD: cylinder rear inner (7383747)	ea	1	*	*	*	*	*	*	*	*	*	*	0	0	D-16	1
X20		GUARD: cylinder rear inner (7383746)	ea	1	*	*		*		*	*	*	*	*	0	0	D-16	1
P-O	5310-809-3079	WASHER, FLAT: cylinder top guards (8) cylinder rear inner guards (8) (96906-27183-19)	ea	16	*	*	*	*	*	*	1	*	*	1	14	144	D-16	2
P-O	5310-384-5272	WASHER, LOCK: cylinder top guards (8) cylinder lower tube guards (8) front tube guards (8) cylinder rear inner guards (8) (96906-35338-48)	ea	32	*	*	*	*	*	*	1	*	*	1	14	800	D-16	3
P-O	5305-042-6417	SCREW CAP HEXAGON HEAD: cylinder rear inner guards (8) cylinder top guards (8) (96906-90725-113)	ea	16	*	*	*	*	*	*	1	*	*	1	14	144	D-16	4
P-O		SHIM: cylinder lower tube guards (7953557)	ea	4	*	*	*	*	*	*	1	*	*	1	14	72	D-16	5
X20		GUARD: cylinder front inner (7383745)	ea	2	*	*	*	*	*	*	*	*	*	*	0	0	D-16	6
X20		GUARD: left and right cylinder lower tubes (8744840)	ea	2	*	*	*	*	*	*	*	*	*	*	0	0	D-16	7
P-O	5305-071-1770	SCREW CAP HEXAGON HEAD: lower tube guards (96906-90725-116)	ea	8	*	*	*	*	*	*	1	*	*	1	14	144	D-16	8
P-O	5305-782-9495	SCREW CAP HEXAGON HEAD: cylinder front guards (96906-90725-111)	ea	8	*	*	*	*	*	*	1	*	*	1	14	144	D-16	9
P-O	5305-044-4153	SCREW CAP HEXAGON HEAD: cylinder top guards clearance adjustment (96906-90725-109)	ea	8	*	*	*	*	*	*	1	*	*	1	14	144	D-16	10
X20		GUARD: cylinder top (7383742)	ea	1	*	*	*	*	*	*	*	*	*	*	0	0	D-16	11
X20		GUARD: cylinder top (7383743)	ea	1	*	*	*	*	*	*	*	*	*	*	0	0	D-16	12
		Non-Illustrated Item																
P-O		PLUG: left and right cylinder rear inner guard mounting (8744719)	ea	8	*	*	*	*	*	*	1	*	*	1	14	144	D-16	
		2006- HYDRAULIC SYSTEM ARMOR GUARDS																
X20		GUARD ASSEMBLY: control valve to manifold outlet hose (11645220)	ea	1	*	*	*	*	*	*	*	*	*	*	0	0	D-17	1
P-O	5305-053-8993	SCREW CAP HEXAGON HEAD: left cylinder hose guard lug (2) valve guard pad (4) control valve guard pad (3) hydraulic cylinder valve control (2) (96906-90725-112)	ea	11	*	*	*	*	*	*	1	*	*	1	14	144	D-17	2

(1) SMR CODE	(2) FEDERAL STOCK NO.	(3) DESCRIPTION	(4) UNIT OF MEAS-URE	(5) QTY. INC. IN UNIT	(6) ORGANIZATIONAL 15 DAY MAINT. ALLOWANCE				(7) DIRECT SUPPORT 30-DAY MAINT. ALLOWANCE			(8) GENERAL SUPPORT 30-DAY MAINT. ALLOWANCE			(9) 1 YR. ALW. PER 100 EQUIP/ CNTGCY PLAN-NING	(10) DEPOT MAINT. ALW PER 100 EQUIP	(11) ILLUS-TRATION	
					(A) 1-5	(B) 6-20	(C) 21-50	(D) 51-100	(A) 1-20	(B) 21-50	(C) 51-100	(A) 1-20	(B) 21-50	(C) 51-00			(A) FIG NO.	(B) ITEM NO.
		2006 - HYDRAULIC SYSTEM ARMOR GUARDS-Continued																
P-O	5310-584-5272	WASHER, LOCK: tube and guard assembly (1) valve guard pad (4) left cylinder hose guard lug (2) control valve guard pad (3) guard control valve to manifold pad (1) bar tube clamp (1) control valve guard (1) hydraulic cylinder valve cylinder guard (2) (96906-35338-48)	ea	15	*	*	*	*	*	*	1	*	*	1	14	144	D-17	3
X20		GUARD: hydraulic cylinder valve control (11645191)	ea	1	*	*	*	*	*	*	*	*	*	*	0	0	D-17	4
P-O	5305-119-5219	SCREW CAP HEXAGON HEAD: guard control valve to manifold pad (1) control valve guard (1) tube and guard assembly (1) (96906-90727-111)	ea	3	*	*	*	*	*	*	1	*	*	1	6	18	D-17	5
X20		GUARD: control valve to manifold (11645212)	ea	1	*	*	*	*	*	*	*	*	*	*	0	0	D-17	6
X20		GUARD ASSEMBLY: manifold to left cylinder hose (11645221-1)	ea	1	*	*	*	*	*	*		*	*	*	0	0	D-17	7
X20		GUARD ASSEMBLY: manifold to right cylinder hose (11645221-2)	ea	1	*	*	*	*	*	*	*	*	*	*	0	0	D-17	8
X20		BAR: tubing and guard (11645146)	ea	1	*	*	*	*	*	*	*	*	*	*	0	0	D-17	9
X20		CLAMP: bar tubing (8744720)	ea	1	*	*	*	*	*	*	*	*	*	*	0	0	D-17	10
P-O	5310-809-3079	WASHER, FLAT: tubing and guard assembly (96906-27183-19)	ea	1	*	*	*	*	*	*	1	*	*	1	6	18	D-17	11
P-O	5305-042-6417	SCREW CAP HEXAGON HEAD: bar tube clamp (96906-90725-113)	ea	1	*	*	*	*	*	*	1	*	*	1	6	18	D-17	12
X20		COVER ASSEMBLY: hydraulic tube front guard (10870931)	ea	1	*	*	*	*	*	*	*	*	*	*	0	0	D-18	1
X20		GUARD ASSEMBLY: tube front (11045117)	ea	1	*	*	*	*	*	*	*	*	*	*	0	0	D-18	2
P-0	5310-087-4652	NUT: hydraulic tube front guard (96906-51922-17)	ea	4	*	*	*	*	*	*	1	*	*	1	14	72	D-18	3
X20		GUARD ASSEMBLY: control valve (11645141)	ea	1	*	*	*	*	*	*	*	*	*	*	0	0	D-18	4
P-O	5305-053-8993	SCREW: cylinder hose guards mounting pads (96906-90725-112)	ea	4	*	*	*	*	*	*	1	*	*	1	14	72	D-18	5

(1) SMR CODE	(2) FEDERAL STOCK NO.	(3) DESCRIPTION	(4) UNIT OF MEAS-URE	(5) QTY. INC. IN UNIT	(6) ORGANIZATIONAL 15 DAY MAINT. ALLOWANCE				(7) DIRECT SUPPORT 30-DAY MAINT. ALLOWANCE			(8) GENERAL SUPPORT 30-DAY MAINT. ALLOWANCE			(9) 1 YR. ALW. PER 100 EQUIP/ CNTGCY PLAN-NING	(10) DEPOT MAINT. ALW PER 100 EQUIP	(11) ILLUS-TRATION	
					(A) 1-5	(B) 6-20	(C) 21-50	(D) 51-100	(A) 1-20	(B) 21-50	(C) 51-100	(A) 1-20	(B) 21-50	(C) 51-00			(A) FIG NO.	(B) ITEM NO.
		2006 - HYDRAULIC SYSTEM ARMOR GUARDS-Continued																
P-O	5310-584-5272	WASHER, LOCK: cylinder hose guards mounting pad (96906-35338-48)	ea	4	*	*	*	*	*	*	1	*	*	1	14	400	D-18	6
P-O	5305-269-3215	SCREW CAP HEXAGON HEAD: hydraulic tube front guard (96906-90725-65)	ea	4	*	*	*	*	*	*	1	*	*	1	14	72	D-18	7
P-O	5305-269-3213	SCREW CAP HEXAGON HEAD: hydraulic tube front guard cover (96906-90725-62)	ea	5	*	*	*	*	*	*	1	*	*	1	14	90	D-18	8
P-O	5310-637-9541	WASHER, LOCK: hydraulic tube front guard cover (96906(35338-46)	ea	5	*	*	*	*	*	*	1	*	*	1	14	500	D-18	9
X20		GUARD ASSEMBLY: hydraulic tube rear (11645113)	ea	1	*	*	*	*	*	*	*	*	*	*	0	0	D-19	1
P-O	5310-087-4652	NUT: hydraulic tube rear guard bottom plate (96906-51922-17)	ea	2	*	*	*	*	*	*	1	*	*	1	12	36	D-19	2
P-O	5305-269-3211	SCREW CAP HEXAGON HEAD: hydraulic tube rear guard (3) hydraulic tube rear guard bottom plate (2) (96906-90725-60)	ea	5	*	*	*	*	*	*	1	*	*	1	14	54	D-19	3
P-O	5310-637-9541	WASHER, LOCK: hydraulic tube rear guard (96906-35338-46)	ea	3	*	*	*	*	*	*	1	*	*	1	14	300	D-19	4
X20		HOUSING ASSEMBLY: manifold to reservoir hydraulic tube (11645089)	ea	1	*	*	*	*	*	*	*	*	*	*	0	0	D-20	1
P-O	5305-269-3214	SCREW CAP HEXAGON HEAD: covers and plates (96906-90725-64)	ea	6	*	*	*	*	*	*	1	*	*	1	14	108	D-21	1
P-O	5310-637-9541	WASHER, LOCK: covers and plates (6) housing to mounting boss (3) (96906-35338-46)	ea	9	*	*	*	*	*	*	1	*	*	1	14	600	D-21	2
P-O	5310-809-4061	WASHER, FLAT: covers (96906-27183-15)	ea	4	*	*	*	*	*	*	1	*	*	1	14	72	D-21	3
X20		COVER: (11645087)	ea	1	*	*	*	*	*	*	*	*	*	*	0	0	D-21	4
X20		COVER: (11645088)	ea	1	*	*	*	*	*	*	*	*	*	*	0	0	D-21	5
X20		PLATE: (11645086)	ea	1	*	*	*	*	*	*	*	*	*	*	0	0	D-21	6
P-O	5305-269-3210	SCREW CAP HEXAGON HEAD: housing to mounting boss (96906-90725-59)	ea	3	*	*	*	*	*	*	1	*	*	1	14	54	D-21	7

(1) SMR CODE	(2) FEDERAL STOCK NO.	(3) DESCRIPTION	(4) UNIT OF MEAS-URE	(5) QTY. INC. IN UNIT	(6) ORGANIZATIONAL 15 DAY MAINT. ALLOWANCE				(7) DIRECT SUPPORT 30-DAY MAINT. ALLOWANCE			(8) GENERAL SUPPORT 30-DAY MAINT. ALLOWANCE			(9) 1 YR. ALW. PER 100 EQUIP/ CNTGCY PLAN-NING	(10) DEPOT MAINT. ALW PER 100 EQUIP	(11) ILLUS-TRATION	
					(A) 1-5	(B) 6-20	(C) 21-50	(D) 51-100	(A) 1-20	(B) 21-50	(C) 51-100	(A) 1-20	(B) 21-50	(C) 51-00			(A) FIG NO.	(B) ITEM NO.
		2006- HYDRAULIC HOSES, LINES, TUBES, FITTINGS AND VALVES																
P-O		ELBOW: control valve tube (1) reservoir to pump return upper tube (1) pump return line lower tube (1) reservoir to pump return upper tube (1) (96906-51820-12)	ea	4	*	*	*	*	*	*	1	*	*	1	6	18	D-22	1
P-O		TUBE: control valve to reservoir return line (11645174)	ea	1	*	*	*	*	*	*	1	*	*	1	6	18	D-22	2
P-O		TUBE ASSEMBLY: pump to control valve pressure line (11645173)	ea	1	*	*	*	*	*	*	1	*	*	1	6	18	D-22	3
P-O		ADAPTER ASSEMBLY: control valve to reservoir return line manifold (96906-51819-21)	ea	1	*	*	*	*	*	*	1	*	*	1	6	18	D-22	4
P-O	5305-042-6417	SCREW CAP HEXAGON HEAD: hy-draulic tube manifold flange (12) manifold outlet return tube flange (4) (96906-90725-113)	ea	16	*	*	*	*	*	*	1	*	*	1	14	216	D-22	5
P-O	5310-584-5272	WASHER, LOCK: hydraulic tube manifold flange (12) tube flange (8) manifold outlet return tube flange (4) (96906-35338-48)	ea	24	*	*	*	*	*	*	1	*	*	1	14	800	D-22	6
P-O	2520-700-5921	FLANGE: hydraulic tube manifold (10883657)	ea	4	*	*	*	*	*	*	1	*	*	1	14	72	D-22	7
P-O		TUBE ASSEMBLY: manifold to housing (11645176-2)	ea	1	*	*	*	*	*	*	1	*	*	1	6	18	D-22	8
P-O		TUBE ASSEMBLY: manifold to housing (11645176-1)	ea	1	*	*	*	*	*	*	1	*	*	1	6	18	D-22	9
X20		MANIFOLD: tube connecting (11645092)	ea	1	*	*	*	*	*	*	*	*	*	*	0	0	D-22	10
X20		PLATE ASSEMBLY: hydraulic tube rear guard bottom (11645115)	ea	1	*	*	*	*	*	*	*	*	*	*	0	0	D-22	11
P-O		ADAPTER ASSEMBLY: pump to control valve pressure line manifold (96906-51819-20)	ea	1	*	*	*	*	*	*	1	*	*	1	12	36	D-22	12
P-O	5330-585-8247	PACKING: hydraulic tube manifold flange (96906-28775-232)	ea	2	*	*	*	*	*	*	1	*	*	1	12	200	D-22	13
P-O		ELBOW: pump to manifold pressure line upper tube (1) control valve pressure inlet line (1) pump pressure and return line tube (1) (96906-51820-11)	ea	3	*	*	*	*	*	*	1	*	*	1	12	36	D-22	14

(1) SMR CODE	(2) FEDERAL STOCK NO.	(3) DESCRIPTION	(4) UNIT OF MEAS-URE	(5) QTY. INC. IN UNIT	(6) ORGANIZATIONAL 15 DAY MAINT. ALLOWANCE				(7) DIRECT SUPPORT 30-DAY MAINT. ALLOWANCE			(8) GENERAL SUPPORT 30-DAY MAINT. ALLOWANCE			(9) 1 YR. ALW. PER 100 EQUIP/ CNTGCY PLAN-NING	(10) DEPOT MAINT. ALW PER 100 EQUIP	(11) ILLUS-TRATION	
					(A) 1-5	(B) 6-20	(C) 21-50	(D) 51-100	(A) 1-20	(B) 21-50	(C) 51-100	(A) 1-20	(B) 21-50	(C) 51-00			(A) FIG NO.	(B) ITEM NO.
		2006 - HYDRAULIC HOSES, LINES, TUBES, FITTINGSAND VALVES-Continued																
P-O		FLANGE: manifold outlet return tube (7340001)	ea	2	*	*	*	*	*	*	1	*	*	1	6	18	D-22	15
P-O	5305-050-1076	SCREW CAP HEXAGON HEAD: manifold inlet pressure tube flange (96906-90725-89)	ea	4	*	*	*	*	*	*	1	*	*	1	14	72	D-22	16
P-O		TUBE: pump to manifold pressure line upper (11645122)	ea	1	*	*	*	*	*	*	1	*	*	1	6	18	D-22	17
P-O		ELBOW: pump to manifold pressure upper tube (96906-51820-31)	ea	1	*	*	*	*	*	*	1	*	*	1	12	36	D-22	18
P-O		NUT: pump to manifold pressure upper tube (96906-51823-11)	ea	2	*	*	*	*	*	*	1	*	*	1	12	36	D-22	19
P-O		SLEEVE: pump to manifold pressure upper tube (96906-51825-11)	ea	2	*	*	*	*	*	*	1	*	*	1	12	36	D-22	20
P-O		HOSE ASSEMBLY: pump pressure line in-termediate (11645145)	ea	1	*	*	*	*	*	*	1	*	*	1	6	18	D-22	21
P-O		ELBOW: pump to manifold pressure upper tube (96906-51820-31)	ea	1	*	*	*	*	*	*	1	*	*	1	12	36	D-22	22
P-O		TUBE ASSEMBLY: pump pressure and return line (11645119)	ea	1	*	*	*	*	*	*	1	*	*	1	6	18	D-22	23
P-O	5310-080-6004	WASHER, FLAT: tube support brace U-bolt (96906-27183-14)	ea	4	*	*	*	*	*	*	1	*	*	1	14	72	D-22	24
P-O	5310-087-4652	NUT: tube support brace U-bolt (96906-51922-17)	ea	4	*	*	*	*	*	*	1	*	*	1	14	72	D-22	25
P-O		U-BOLT: pump pressure and return line tube support brace (10944884)	ea	2	*	*	*	*	*	*	1	*	*	1	12	36	D-22	26
X20		BRACE: pump return line lower tube support (10944883)	ea	1	*	*	*	*	*	*	*	*	*	*	0	0	D-22	27
P-O	5310-012-0384	WASHER, LOCK: pump return line lower tube support brace (96906-35338-29)	ea	2	*	*	*	*	*	*	1	*	*	1	12	200	D-22	28
P-O	5310-656-0227	NUT: pump return line lower tube support brace (96906-35691-825)	ea	2	*	*	*	*	*	*	1	*	*	1	12	36	D-22	29
P-O	5305-782-9495	SCREW CAP HEXAGON HEAD: tube flange (96906-90725-111)	ea	8	*	*	*	*	*	*	1	*	*	1	14	144	D-22	30
P-O	5330-807-8993	PACKING: pump return tube elbow (1) pump return line elbow lower (1) (96906-28775-228)	ea	2	*	*	*	*	*	*	1	*	*	1	6	100	D-22	31

(1) SMR CODE	(2) FEDERAL STOCK NO.	(3) DESCRIPTION	(4) UNIT OF MEAS-URE	(5) QTY. INC. IN UNIT	(6) ORGANIZATIONAL 15 DAY MAINT. ALLOWANCE				(7) DIRECT SUPPORT 30-DAY MAINT. ALLOWANCE			(8) GENERAL SUPPORT 30-DAY MAINT. ALLOWANCE			(9) 1 YR. ALW. PER 100 EQUIP/ CNTGCY PLAN-NING	(10) DEPOT MAINT. ALW PER 100 EQUIP	(11) ILLUS-TRATION	
					(A) 1-5	(B) 6-20	(C) 21-50	(D) 51-100	(A) 1-20	(B) 21-50	(C) 51-100	(A) 1-20	(B) 21-50	(C) 51-00			(A) FIG NO.	(B) ITEM NO.
		2006 - HYDRAULIC HOSES, LINES, TUBES, FITTINGS AND VALVES-Continued																
P-O		TUBE ASSEMBLY: pump return line lower (11645121)	ea	1	*	*	*	*	*	*	1	*	*	1	6	18	D-22	32
P-O		TUBE ASSEMBLY: pump return line (11645057)	ea	1	*	*	*	*	*	*	1	*	*	1	6	18	D-22	33
P-O		TUBE: pump return line lower (11645142)	ea	1	*	*	*	*	*	*	1	*	*	1	6	18	D-22	34
P-O		ELBOW: reservoir to pump return line upper tube (96906-51820-32)	ea	2	*	*	*	*	*	*	1	*	*	1	12	36	D-22	35
P-O		NUT: reservoir to pump return line upper tube (96906-51823-12)	ea	2	*	*	*	*	*	*	1	*	*	1	12	36	D-22	36
P-O		HOSE ASSEMBLY: pump return line intermediate (11645139)	ea	1	*	*	*	*	*	*	1	*	*	1	6	18	D-22	37
P-O		SLEEVE: reservoir to pump return line upper tube (96906-51825-12)	ea	2	*	*	*	*	*	*	1	*	*	1	12	36	D-22	38
P-O		TUBE: reservoir to pump return line upper (11645107)	ea	1	*	*	*	*	*	*	1	*	*	1	6	18	D-22	39
P-O	5310-637-9541	WASHER, LOCK: hydraulic tube manifold assembly (2) support tube elbow bracket (2) (96906-35338-46)	ea	4	*	*	*	*	*	*	1	*	*	1	12	200	D-22	40
P-O	5310-809-4061	WASHER, FLAT: support tube elbow bracket (96906-27183-15)	ea	2	*	*	*	*	*	*	1	*	*	1	12	36	D-22	41
X20		BRACKET: support tube elbow (11645211)	ea	1	*	*	*	*	*	*	*	*	*	*	0	0	D-22	42
P-O	5310-209-0965	WASHER, LOCK: manifold inlet pressure tube flange (96906-35338-47)	ea	4	*	*	*	*	*	*	1	*	*	1	14	400	D-22	43
P-O		FLANGE: manifold inlet pressure tube (7340000)	ea	2	*	*	*	*	*	*	1	*	*	1	12	36	D-22	44
P-O	5305-269-3212	SCREW CAP HEXAGON HEAD: support tube elbow bracket (96906-90725-61)	ea	2	*	*	*	*	*	*	1	*	*	1	12	36	D-22	45
P-O		ADAPTER ASSEMBLY: pump to manifold pressure line upper tube (11645123)	ea	1	*	*	*	*	*	*	1	*	*	1	6	18	D-22	46
P-O	5330-297-9990	PACKING: manifold pressure tube flange (96906-28775-222)	ea	1	*	*	*	*	*	*	1	*	*	1	6	100	D-22	47
P-O		ADAPTER: reservoir return line tube (11645164)	ea	1	*	*	*	*	*	*	1	*	*	1	6	18	D-22	48
P-0	5330-579-7927	PACKING: manifold outlet return tube flange (96906-28775-225)	ea	1	*	*	*	*	*	*	1	*	*	1	6	100	D-22	49

(1) SMR CODE	(2) FEDERAL STOCK NO.	(3) DESCRIPTION	(4) UNIT OF MEAS-URE	(5) QTY. INC. IN UNIT	(6) ORGANIZATIONAL 15 DAY MAINT. ALLOWANCE				(7) DIRECT SUPPORT 30-DAY MAINT. ALLOWANCE			(8) GENERAL SUPPORT 30-DAY MAINT. ALLOWANCE			(9) 1 YR. ALW. PER 100 EQUIP/ CNTGCY PLAN-NING	(10) DEPOT MAINT. ALW PER 100 EQUIP	(11) ILLUS-TRATION	
					(A) 1-5	(B) 6-20	(C) 21-50	(D) 51-100	(A) 1-20	(B) 21-50	(C) 51-100	(A) 1-20	(B) 21-50	(C) 51-00			(A) FIG NO.	(B) ITEM NO.
		2006 - HYDRAULIC HOSES, LINES TUBES, FITTINGS AND VALVES-Continued																
P-O		ELBOW ASSEMBLY: manifold pressure line (11645213)	ea	1	*	*	*	*	*	*	1	*	*	1	6	18	D-22	50
P-O		ELBOW: manifold return line (10883660)	ea	1	*	*	*	*	*	*	1	*	*	1	6	18	D-22	51
P-O	5305-269-3213	SCREW CAP HEXAGON HEAD: hydraulic tube manifold assembly (96906-90725-62)	ea	2	*	*	*	*	*	*	1	*	*	1	14	90	D-22	52
P-O		RESERVOIR ASSEMBLY: hydraulic cylinder (11645215)	ea	1	*	*	*	2	*	2	2	*	2	2	6	18	D-22	53
P-O		HOSE ASSEMBLY: control valve outlet pressure line (11645120-1)	ea	1	*	*	*	*	*	*	1	*	*	1	6	18	D-23	1
P-O		ADAPTER: control valve outlet and inlet hose (96906-51816-11)	ea	2	*	*	*	*	*	*	1	*	*	1	12	36	D-23	2
P-O		TUBE ASSEMBLY: front manifold to valve (11645193)	ea	1	*	*	*	*	*	*	1	*	*	1	6	18	D-23	3
P-O		ADAPTER: manifold tubing (96906-51819-19)	ea	2	*	*	*	*	*	*	1	*	*	1	12	36	D-23	4
P-O		HOSE ASSEMBLY: manifold to cylinder lower (11645160-3)	ea	2	*	*	*	*	*	*	1	*	*	1	12	36	D-23	5
P-O		ELBOW ASSEMBLY: cylinder hose (96906-51820-28)	ea	4	*	*	*	*	*	*	1	*	*	1	14	72	D-23	6
P-O		HOSE ASSEMBLY: cylinder upper (11645160-2)	ea	2	*	*	*	*	*	*	1	*	*	1	12	36	D-23	7
P-O	4730-569-9637	SWING JOINT: cylinder tube (8735819)	ea	4	*	*	*	*	*	*	1	*	*	1	14	72	D-23	8
P-O	4730-569-9648	ADAPTER ASSEMBLY: cylinder tube swing joint (8735794)	ea	4	*	*	*	*	*	*	1	*	*	1	12	36	D-23	9
P-O	4730-569-9635	TUBE: cylinder upper (8744811)	ea	2	*	*	*	*	*	*	1	*	*	1	12	36	D-23	10
P-O	4730-278-4811	ELBOW: cylinder tube (7350920)	ea	6	*	*	*	*	*	*	1	*	*	1	14	108	D-23	11
P-O	4730-289-6113	REDUCER: cylinder elbow (8724192)	ea	4	*	*	*	*	*	*	1	*	*	1	14	72	D-23	12
P-O		HOSE ASSEMBLY: cylinder lower (11645160-1)	ea	2	*	*	*	*	*	*	1	*	*	1	12	36	D-23	13
P-O		HOSE ASSEMBLY: manifold to cylinder upper (11645160-4)	ea	2	*	*	*	*	*	*	1	*	*	1	12	36	D-23	14
X20		MANIFOLD: hydraulic cylinder hose (8744760)	ea	1	*	*	*	*	*	*	*	*	*	*	0	0	D-23	15
P-O		TUBE ASSEMBLY: front manifold to valve (11645194)	ea	1	*	*	*	*	*	*	1	*	*	1	6	18	D-23	16

(1) SMR CODE	(2) FEDERAL STOCK NO.	(3) DESCRIPTION	(4) UNIT OF MEAS-URE	(5) QTY. INC. IN UNIT	(6) ORGANIZATIONAL 15 DAY MAINT. ALLOWANCE				(7) DIRECT SUPPORT 30-DAY MAINT. ALLOWANCE			(8) GENERAL SUPPORT 30-DAY MAINT. ALLOWANCE			(9) 1 YR. ALW. PER 100 EQUIP/ CNTGCY PLAN-NING	(10) DEPOT MAINT. ALW PER 100 EQUIP	(11) ILLUS-TRATION	
					(A) 1-5	(B) 6-20	(C) 21-50	(D) 51-100	(A) 1-20	(B) 21-50	(C) 51-100	(A) 1-20	(B) 21-50	(C) 51-00			(A) FIG NO.	(B) ITEM NO.
		2006 - HYDRAULIC HOSES, LINES TUBES, FITTINGS AND VALVES-Continued																
P-O		HOSE ASSEMBLY: control valve inlet return line (11645120-2)	ea	1	*	*	*	*	*	*	1	*	*	1	6	18	D-23	17
P-O	4730-569-9639	TUBE: cylinder lower (8744812)	ea	2	*	*	*	*	*	*	1	*	*	1	12	36	D-23	18
P-OR	2590-970-8970	CYLINDER AND RAM ASSEMBLY: right (10940524-2)	ea	1	*	*	2	2	*	2	2	*	2	2	6	18	D-23	19
P-OR	2590-907-8969	CYLINDER AND RAM ASSEMBLY: left (10940524-1)	ea	1	*	*	2	2	*	2	2	*	2	2	6	18	D-23	20
		2006- HYDRAULIC RESERVOIR DRAIN TROUGH ASSEMBLY																
P-O		TROUGH ASSEMBLY: reservoir drain (7700049)	ea	1	*	*	*	*	*	*	1	*	*	1	6	18	D-24	1
P-O	5305-068-0501	SCREW CAP HEXAGON HEAD: reservoir drain trough (96906-90725-5)	ea	4	*	*	*	*	*	*	1	*	*	1	14	72	D-24	2
P-O	5310-582-5965	WASHER, LOCK: reservoir drain trough (96906-35338-44)	ea	4	*	*	*	*	*	*	1	*	*	1	14	400	D-24	3
		2006 - HYDRAULIC CYLINDER AND RAM ASSEMBLY																
X1F		CYLINDER ASSEMBLY: left hydraulic (10951755-1)	ea	1													D-25	1
X1F		CYLINDER ASSEMBLY: right hydraulic (10951755-2)	ea	1													D-25	1
X1F		TOP: left and right hydraulic cylinder assembly (7323554)	ea	2													D-25	2
X1F		TUBE ASSEMBLY: left and right hydraulic cylinder assembly (10951754)	ea	2													D-25	3
P-F	5310-912-4741	NUT: left and right hydraulic cylinder piston to cylinder (96906-35692-2427)	ea	2					*	*	1	*	*	1	6	18	D-25	4
P-F		PISTON: left and right hydraulic cylinder upper (7261646)	ea	2					*	2	2	*	2	2	6	18	D-25	5
P-F	2590-726-1644	RING: left and right hydraulic cylinder piston (7261644)	ea	2					*	2	2	*	2	2	6	100	D-25	6
P-F	5330-726-1470	PACKING SET: left and right hydraulic cylinder piston (7261470)	ea	2					*	2	2	*	2	2	6	100	D-25	7

(1) SMR CODE	(2) FEDERAL STOCK NO.	(3) DESCRIPTION	(4) UNIT OF MEAS-URE	(5) QTY. INC. IN UNIT	(6) ORGANIZATIONAL 15 DAY MAINT. ALLOWANCE				(7) DIRECT SUPPORT 30-DAY MAINT. ALLOWANCE			(8) GENERAL SUPPORT 30-DAY MAINT. ALLOWANCE			(9) 1 YR. ALW. PER 100 EQUIP/ CNTGCY PLAN-NING	(10) DEPOT MAINT. ALW PER 100 EQUIP	(11) ILLUS-TRATION	
					(A) 1-5	(B) 6-20	(C) 21-50	(D) 51-100	(A) 1-20	(B) 21-50	(C) 51-100	(A) 1-20	(B) 21-50	(C) 51-00			(A) FIG NO.	(B) ITEM NO.
		2006 - HYDRAULIC CYLINDER AND RAM ASSEMBLY--Continued																
P-F	2520-726-1645	PISTON: left and right hydraulic cylinder lower (7261645)	ea	2					*	2	2	*	2	2	6	18	D-25	8
P-F	5310-562-0133	WASHER: left and right hydraulic cylinder lower piston (8668478)	ea	2					*	2	2	*	2	2	6	18	D-25	9
P-F	5330-951-2492	RING: left and right hydraulic cylinder head oil seal (96906-28775-442)	ea	2					*	2	2	*	2	2	6	100	D-25	10
A-F		RAM ASSEMBLY: left and right hydraulic cylinder (8668467)	ea	2													D-25	11
P-F	3120-732-3548	BEARING: left and right hydraulic cylinder ram (7323548)	ea	4					*	2	2	*	2	2	6	18	D-25	12
P-F		HEAD: left and right hydraulic cylinder ram (8668466)	ea	2					*	2	2	*	2	2	6	10	D-25	13
P-F	2520-167-9182	PISTON ROD: left and right hydraulic cylinder ram (8668465)	ea	2					*	2	2	*	2	2	6	10	D-25	14
P-F	9505-248-9850	WIRE, LOCK: left and right hydraulic cylinder piston rod, packing gland (96906-20995-F47)	ft.	≠					*	*	*	*	*	*	1	4	D-25	15
P-F	5305-810-8435	SCREW: left and right hydraulic cylinder piston rod packing gland (96906-51096-115)	ea	4					*	*	1	*	*	1	12	36	D-25	16
P-F	5330-641-3376	SEAL: left and right hydraulic cylinder piston rod packing gland (7705568)	ea	2					*	*	1	*	*	1	6	100	D-25	17
P-F	2590-726-1585	GUARD: left and right hydraulic cylinder piston rod packing (7261585)	ea	2					*	*	1	*	*	1	6	100	D-25	18
P-F	2520-770-5560	PACKING SET: left and right hydraulic cylinder piston rod (7705560)	ea	2					*	2	2	*	2	2	6	100	D-25	19
P-F	5305-655-6276	SCREW: left and right hydraulic cylinder head (96906-35304-168)	ea	16					*	*	1	*	*	1	14	144	D-25	20
P-F	5310-012-1574	WASHER, LOCK: left and right hydraulic cylinder head (96906-35338-31)	ea	8					2	3	6	2	3	6	48	800	D-25	21
P-F	2520-726-1641	HEAD: left and right hydraulic cylinder (7261641)	ea	2					*	2	2	*	2	2	6	18	D-25	22
P-F	5315-846-0126	PIN COTTER: left and right hydraulic piston to cylinder (96906-24665-628)	ea	2					*	*	1	*	*	1	6	100	D-25	23

(1) SMR CODE	(2) FEDERAL STOCK NO.	(3) DESCRIPTION	(4) UNIT OF MEAS-URE	(5) QTY. INC. IN UNIT	(6) ORGANIZATIONAL 15 DAY MAINT. ALLOWANCE				(7) DIRECT SUPPORT 30-DAY MAINT. ALLOWANCE			(8) GENERAL SUPPORT 30-DAY MAINT. ALLOWANCE			(9) 1 YR. ALW. PER 100 EQUIP/ CNTGCY PLAN-NING	(10) DEPOT MAINT. ALW PER 100 EQUIP	(11) ILLUS-TRATION	
					(A) 1-5	(B) 6-20	(C) 21-50	(D) 51-100	(A) 1-20	(B) 21-50	(C) 51-100	(A) 1-20	(B) 21-50	(C) 51-00			(A) FIG NO.	(B) ITEM NO.
		2006- HYDRAULIC RESERVOIR ASSEMBLY																
P-O	4730-826-6465	FITTING: relief reservoir pressure (96906-35670-2)	ea	1	*	*	*	*	*	*	1	*	*	1	6	18	D-26	1
P-O	5305-269-3213	SCREW CAP HEXAGON HEAD: reservoir to cover (4) reservoir top to reservoir (19) (96906-90725-62)	ea	23	*	*	*	*	*	*	1	*	*	1	14	365	D-26	2
P-O	5310-637-9541	WASHER, LOCK: screen access cover (4) reservoir to cover (4) reservoir top to reservoir (19) (96906-35338-46)	ea	27	*	*	*	*	*	*	1	*	*	1	14	1900	D-26	3
P-O	2590-656-3613	GASKET: reservoir top cover (7699952)	ea	1	*	*	*	2	*	2	2	*	2	2	6	100	D-26	4
P-O		ADAPTER: reservoir (11645165)	ea	1	*	*	*	*	*	*	1	*	*	1	6	18	D-26	5
P-O		STUD: screen to manifold (11645233)	ea	2	*	*	*	*	*	*	1	*	*	1	12	36	D-26	6
P-O	5305-068-0501	SCREW CAP HEXAGON HEAD: baffle to reservoir (96906-90725-5)	ea	3	*	*	*	*	*	*	1	*	*	1	14	54	D-26	7
P-O	5310-582-5965	WASHER, LOCK: manifold to reservoir (96906-35338-44)	ea	6	*	*	*	*	*	*	1	*	*	1	14	300	D-26	8
P-O	2590-656-3615	SCREEN ASSEMBLY: reservoir pump filter (7699950)	ea	1	*	*	*	*	*	*	1	*	*	1	6	18	D-26	9
P-O	5310-407-9566	WASHER, LOCK: screen to manifold (96906-35338-45)	ea	2	*	*	*	*	*	*	1	*	*	1	12	200	D-26	10
P-O	5310-761-1681	NUT: screen to manifold (96906-51967-4)	ea	2	*	*	*	*	*	*	1	*	*	1	12	36	D-26	11
P-O	2590-656-3614	PLUG ASSEMBLY: filter (7699887)	ea	1	*	*	*	*	*	*	1	*	*	1	6	18	D-26	12
P-O	2590-656-3617	DIP STICK: reservoir (7699911)	ea	1	*	*	*	*	*	*	1	*	*	1	6	18	D-26	13
P-O	5340-840-7819	SNAP RING: screen retainer (96906-16625-1256)	ea	1	*	*	*	*	*	*	1	*	*	1	6	18	D-26	14
P-O	2590-569-9612	SCREEN ASSEMBLY: filter plug filter (8709783)	ea	1	*	*	*	*	*	*	1	*	*	1	6	18	D-26	15
P-O		COVER ASSEMBLY: reservoir tube (11645166)	ea	1	*	*	*	*	*	*	1	*	*	1	6	18	D-26	16
P-O		GASKET: reservoir tube cover (7699918)	ea	1	*	*	*	2	*	2	2	*	2	2	6	100	D-26	17
X10		RESERVOIR ASSEMBLY: (7699955)	ea	1													D-26	18
P-O		CHAIN ASSEMBLY: reservoir (8381659)	ea	1	*	*	*	*	*	*	1	*	*	1	6	18	D-26	19
P-O		FLANGE: reservoir (8709760)	ea	1	*	*	*	*	*	*	1	*	*	1	6	20	D-26	20
X10		RESERVOIR: (7699973)	ea	1													D-26	21
P-O		GASKET: screen access cover (7699910)	ea	1	*	*	*	2	*	2	2	*	2	2	6	100	D-26	22
X20		COVER: screen access (7699931)	ea	1	*	*	*	8	*	*	*	*	*	*	0	0	D-26	23
P-O		PLUG DRAIN: reservoir (96906-21339-6)	ea	1	*	*	*	*	*	*	1	*	*	1	6	18	D-26	24

(1) SMR CODE	(2) FEDERAL STOCK NO.	(3) DESCRIPTION	(4) UNIT OF MEAS-URE	(5) QTY. INC. IN UNIT	(6) ORGANIZATIONAL 15 DAY MAINT. ALLOWANCE				(7) DIRECT SUPPORT 30-DAY MAINT. ALLOWANCE			(8) GENERAL SUPPORT 30-DAY MAINT. ALLOWANCE			(9) 1 YR. ALW. PER 100 EQUIP/ CNTGCY PLAN-NING	(10) DEPOT MAINT. ALW PER 100 EQUIP	(11) ILLUS-TRATION	
					(A) 1-5	(B) 6-20	(C) 21-50	(D) 51-100	(A) 1-20	(B) 21-50	(C) 51-100	(A) 1-20	(B) 21-50	(C) 51-00			(A) FIG NO.	(B) ITEM NO.
		2006- HYDRAULIC RESERVOIR ASSEMBLY-Continued																
P-O	5305-269-4511	SCREW CAP HEXAGON HEAD: screen access cover (96906-90725-63)	ea	4	*	*	*	*	*	*	1	*	*	1	14	72	D-26	25
P-O	5310-823-8803	WASHER, FLAT: reservoir mounting pad (96906-27183-21)	ea	4	*	*	*	*	*	*	1	*	*	1	14	72	D-26	26
P-O	5310-820-6653	WASHER, LOCK: reservoir mounting pad (96906-35338-50)	ea	4	*	*	*	*	*	*	*	*	*	1	14	400	D-26	27
P-O	5305-727-3804	SCREW CAP HEXAGON HEAD: reservoir mounting pad (96096-90725-165)	ea	4	*	*	*	*	*	*	1	*	*	1	14	72	D-26	28
X20		BAFFLE ASSEMBLY: reservoir manifold (7699977)	ea	1	*	*	*	*	*	*	*	*	*	*	0	0	D-26	29
P-O		COVER ASSEMBLY: reservoir top (7699956)	ea	1	*	*	*	*	*	*	1	*	*	1	6	18	D-26	30
P-O		MANIFOLD: hydraulic cylinder (7699949)	ea	1	*	*	*	2	*	2	2	*	2	2	6	18	D-26	31
P-O	5305-068-0500	SCREW CAP HEXAGON HEAD: manifold to reservoir (96906-90725-3)	ea	3	*	*	*	*	*	*	1	*	*	1	14	300	D-26	32
		2006- DIRECTIONAL CONTROL VALVE																
P-O	5305-716-8184	SCREW CAP HEXAGON HEAD: control valve return outlet flange (96906-90726-112)	ea	4	*	*	*	*	*	*	1	*	*	1	14	72	D-27	1
P-O	5310-584-5272	WASHER, LOCK: control valve return outlet flange (96906-35338-48)	ea	4	*	*	*	*	*	*	1	*	*	1	14	100	D-27	2
P-O		TUBE ASSEMBLY: control valve return outlet (11645161)	ea	1	*	*	*	*	*	*	1	*	*	1	6	18	D-27	3
P-O	5330-579-7927	PACKING: control valve return outlet flange (96906-28775-225)	ea	1	*	*	*	*	*	*	1	*	*	1	6	100	D-27	4
P-O	2590-656-3606	VALVE ASSEMBLY: hydraulic cylinder control (7049998)	ea	1	*	*	*	*	*	*	1	*	*	1	6	18	D-27	5
P-O	5330-297-9990	PACKING: hydraulic cylinder control valve manifold (3) control valve pressure inlet line flange (1) (96906-28775-222)	ea	4	*	*	*	*	*	*	1	*	*	1	6	100	D-27	6
P-O	5310-209-9065	WASHER, LOCK: control valve pressure inlet flange (96906-35338-47)	ea	4	*	*	*	*	*	*	1	*	*	1	14	400	D-27	7
P-O	5305-710-4192	SCREW CAP HEXAGON HEAD: control valve pressure inlet line flange (96906-90726-87)	ea	4	*	*	*	*	*	*	1	*	*	1	14	72	D-27	8

(1) SMR CODE	(2) FEDERAL STOCK NO.	(3) DESCRIPTION	(4) UNIT OF MEAS-URE	(5) QTY. INC. IN UNIT	(6) ORGANIZATIONAL 15 DAY MAINT. ALLOWANCE				(7) DIRECT SUPPORT 30-DAY MAINT. ALLOWANCE			(8) GENERAL SUPPORT 30-DAY MAINT. ALLOWANCE			(9) 1 YR. ALW. PER 100 EQUIP/ CNTGCY PLAN-NING	(10) DEPOT MAINT. ALW PER 100 EQUIP	(11) ILLUS-TRATION (A) FIG NO.	(B) ITEM NO.
					(A) 1-5	(B) 6-20	(C) 21-50	(D) 51-100	(A) 1-20	(B) 21-50	(C) 51-100	(A) 1-20	(B) 21-50	(C) 51-00				
		2006 - DIRECTIONAL CONTROL VALV E-Continued																
P-O	5305-071-1779	SCREW-CAP HEXAGON HEAD: hydraulic cylinder control valve (96906-90725-126)	ea	3	*	*	*	*	*	*	1	*	*	1	14	54	D-27	9
P-O	5310-584-5272	WASHER, LOCK: hydraulic cylinder control valve (96906-35338-48)	ea	3	*	*	*	*	*	*	1	*	*	1	12	100	D-27	10
P-O		TUBE ASSEMBLY: control valve pressure inlet line (11645170)	ea	1	*	*	*	*	*	*	1	*	*	1	6	18	D-27	11
P-O		UNLOADER ASSEMBLY: control valve safety (7356794)	ea	1	*	*	*	*	*	*	1	*	*	1	6	18	D-27	12
P-O	2590-735-6793	UNLOADER: control valve safety (7356793)	ea	1	*	*	*	*	*	*	1	*	*	1	6	18	D-27	13
P-0	5310-837-7788	GASKET: safety unloader seal (8383242)	ea-	1	*	*	*	2	*	2	2	*	2	2	6	100	D-27	14
P-O		NUT: safety unloader (11645094)	ea	1	*	*	*	*	*	*	1	*	*	1	6	18	D-27	15
P-O		ELBOW: safety unloader (96906-39207-004)	ea	1	*	*	*	*	*	*	1	*	*	1	6	18	D-27	16
P-O		ELBOW: control valve safety unloader (7044034)	ea	1	*	*	*	*	*	*	1	*	*	1	6	12	D-27	17
X20		MANIFOLD: hydraulic cylinder control valve (7699970)	ea	1	*	*	*	*	*	*	*	*	*	*	0	0	D-27	18
P-O	5305-710-4202	SCREW CAP HEXAGON HEAD: hydraulic cylinder control valve manifold (96906-90726-96)	ea	8	*	*	*	*	*	*	1	*	*	1	14	144	D-27	19
P-O	5310-209-0965	WASHER, LOCK: hydraulic cylinder control valve manifold (96906-35338-47)	ea	8	*	*	*	*	*	*	1	*	*	1	14	144	D-27	20
X20		TUBE ASSEMBLY: control valve safety unloader (11645180)	ea	1	*	*	*	*	*	*	*	*	*	*	0	0	D-27	21
P-O		TUBE: control valvesafety unloader (approximate length 22.12 inches) (11645180-1)	ea	1	*	*	*	*	*	*	1	*	*	1	6	18	D-27	22
P-O		NUT: control valve safety unloader tube (96906-39210-4)	ea	2	*	*	*	*	*	*	1	*	*	1	12	36	D-27	23
P-O	4730-277-9728	SLEEVE: control valve safety unloader tube (96906-39212-4)	ea	2	*	*	*	*	*	*	1	*	*	1	12	36	D-27	24
P-O	4730-278-3853	ELBOW: control valve safety unloader tube (96906-39202-4)	ea	1	*	*	*	*	*	*	1	*	*	1	6	18	D-27	25
P20	9905-935-3863	MARKER BAND: tube assembly control valve safety unloader (96906-39020-28)	ea	1	*	*	*	*	*	*	*	*	*	*	4	*	D-27	26

(1) SMR CODE	(2) FEDERAL STOCK NO.	(3) DESCRIPTION	(4) UNIT OF MEAS-URE	(5) QTY. INC. IN UNIT	(6) ORGANIZATIONAL 15 DAY MAINT. ALLOWANCE				(7) DIRECT SUPPORT 30-DAY MAINT. ALLOWANCE			(8) GENERAL SUPPORT 30-DAY MAINT. ALLOWANCE			(9) 1 YR. ALW. PER 100 EQUIP/ CNTGCY PLAN-NING	(10) DEPOT MAINT. ALW PER 100 EQUIP	(11) ILLUS-TRATION	
					(A) 1-5	(B) 6-20	(C) 21-50	(D) 51-100	(A) 1-20	(B) 21-50	(C) 51-100	(A) 1-20	(B) 21-50	(C) 51-00			(A) FIG NO.	(B) ITEM NO.
		2006 - MOLDBOARD TILT ARMS, AND RELATED ITEMS																
P-O	3830-520-8385	CABLE ASSEMBLY: moldboard mechanical lifting cutter (7360940)	ea	2	*	*	*	*	*	*	1	*	*	1	12	200	D-28	1
X10		ROPE: moldboard cable (8383372)	ea	2													D-28	2
P-O	4030-243-4441	CLAMP: moldboard rope (96906-16842-8)	ea	8	*	*	*	*	*	*	1	*	*	1	14	72	D-28	3
X10		TUBE ROPE END: moldboard rope end (8383374)	ea	2													D-28	4
P20	2590-125-3832	BLADE ASSEMBLY: bulldozer (10887470)	ea	1	*	*	*	*	*	*	*	*	*	*	3	*	D-28	5
P-O	2590-125-3836	CLAMP ASSEMBLY: moldboard cable stowage (10934326)	ea	2	*	*	*	*	*	*	1	*	*	1	12	36	D-28	6
P-O	5305-889-2872	SCREW: bulldozer name plate (96906-24649-46)	ea	4	*	*	*	*	*	*	1	*	*	1	14	72	D-28	7
P20		PLATE, NAME: bulldozer (10944911)	ea	1	*	*	*	*	*	*	*	*	*	*	5	*	D-28	8
P-O		BOLT: cutting edge to moldboard (11640676)	ea	24	*	*	*	*	*	*	1	*	*	1	14	432	D-28	9
P-O	2540-770-5174	EDGE: bulldozer moldboard cutting (7705174)	ea	1	*	*	*	*	*	*	1	*	*	1	6	18	D-28	10
P-O		PIN: left and right moldboard tilt arm to bracket (11637640-3)	ea	2	*	*	*	*	*	*	1	*	*	1	12	36	D-28	11
P-O	2540-770-5186	TILT ARM ASSEMBLY: moldboard front mounting bracket outer (7705186)	ea	2	*	*	*	*	*	*	*	*	*	*	5	*	D-28	12
P-O		PIN: left and right tilt arm to moldboard (11637640-4)	ea	2	*	*	*	*	*	*	1	*	*	1	14	48	D-28	13
P-O	5305-727-5677	SCREW CAP HEXAGON HEAD: left and right moldboard tilt arm to bracket (2) left and right tilt arm to moldboard (4) moldboard push beam to bracket (2) (96906-90726-162)	ea	8	*	*	*	*	*	*	1	*	*	1	14	36	D-28	14
P-O	5310-800-0695	WASHER, LOCK: left and right moldboard tilt arm to bracket (2) left and right tilt arm to moldboard (4) moldboard push beam to bracket (2) (96906-35335-39)	ea	8	*	*	*	*	*	*	1	*	*	1	14	200	D-28	15
P-O	2590-889-6730	LOCK: left and right moldboard tilt arm to bracket (2) left and right tilt arm to moldboard (4) moldboard push beam to bracket (2) (11637238)	ea	8	*	*	*	*	*	*	1	*	*	1	12	800	D-28	16
P-O	5310-584-7888	WASHER, LOCK: cutting edge to moldboard (96906-35338-51)	ea	24	*	*	*	*	*	*	1	*	*	1	14	400	D-28	17

(1) SMR CODE	(2) FEDERAL STOCK NO.	(3) DESCRIPTION	(4) UNIT OF MEAS-URE	(5) QTY. INC. IN UNIT	(6) ORGANIZATIONAL 15 DAY MAINT. ALLOWANCE				(7) DIRECT SUPPORT 30-DAY MAINT. ALLOWANCE			(8) GENERAL SUPPORT 30-DAY MAINT. ALLOWANCE			(9) 1 YR. ALW. PER 100 EQUIP/ CNTGCY PLAN-NING	(10) DEPOT MAINT. ALW PER 100 EQUIP	(11) ILLUS-TRATION	
					(A) 1-5	(B) 6-20	(C) 21-50	(D) 51-100	(A) 1-20	(B) 21-50	(C) 51-100	(A) 1-20	(B) 21-50	(C) 51-00			(A) FIG NO.	(B) ITEM NO.
		2006 - MOLDBOARD TILT ARMS, AND RELATED ITEMS -Continued																
P-O	5310-763-8921	NUT: cutting edge to moldboard (96906-51967-23)	ea	24	*	*	*	*	*	*	1	*	*	1	14	432	D-28	18
P-O		PIN: left and right tilt arm to moldboard (11637640-6)	ea	2	*	*	*	*	*	*	1	*	*	1	12	363	D-28	19
P-O	2590-653-9533	TILT ARM ASSEMBLY: moldboard left inner (8381773)	ea	1	*	*	*	*	*	*	*	*	*	*	3	*	D-28	20
P-O	2590-653-9534	TILT ARM ASSEMBLY: moldboard right inner (8381774)	ea	1	*	*	*	*	*	*	*	*	*	*	3	*	D-28	21
		2006- PUSH BEAMS AND RELATED ITEMS																
P-O	2590-653-9532	PUSH BEAM ASSEMBLY: moldboard (8381771)	ea	2	*	*	*	*	*	*	*	*	*	*	5	*	D-29	1
P-O		PIN: push beam to moldboard (11637640-1)	ea	4	*	*	*	*	*	*	1	*	*	1	14	72	D-29	2
P-O		PIN: moldboard push beam (11637640-5)	ea	2	*	*	*	*	*	*	1	*	*	1	12	36	D-29	3
P-O	2590-889-6730	LOCK: pushbeam to moldboard (4) moldboard push beam pin (2) (11637238)	ea	6	*	*	*	*	*	*	1	*	*	1	14	72	D-29	4
P-O	5310-800-0695	WASHER, LOCK: push beam to moldboard (4) moldboard cylinder and ram arm lock to push beam (2) (96906-35335-39)	ea	6	*	*	*	*	*	*	1	*	*	1	14	400	D-29	5
P-O	5305-727-5677	SCREW CAP HEXAGON HEAD: push beam to moldboard (4) moldboard cylinder and ram arm lock to push beam (2) (96906-90726-162)	ea	6	*	*	*	*	*	*	1	*	*	1	14	36	D-29	6
P-O		PIN: moldboard push beam to bracket (11637640-2)	ea	2	*	*	*	*	*	*	1	*	*	1	12	36	D-29	7
		2006- MOUNTING BRACKETS																
P-O		BOLT: moldboard cylinder and retaining cap to bracket (8) moldboard tilt arm outer to bracket (4) (96906-35204-238)	ea	12	*	*	*	*	*	*	1	*	*	1	8	24	D-30	1
P-O	5310-584-7889	WASHER, LOCK: moldboard cylinder arm retaining cap to bracket (8) moldboard tilt arm outer to bracket (4) (96906-35338-53)	ea	12	*	*	*	*	*	*	1	*	*	1	14	800	D-30	2
P-O	2590-740-3982	CAP: moldboard cylinder and ram retaining (8709446)	ea	4	*	*	*	*	*	*	*	*	*	*	5	*	D-30	3

(1) SMR CODE	(2) FEDERAL STOCK NO.	(3) DESCRIPTION	(4) UNIT OF MEAS-URE	(5) QTY. INC. IN UNIT	(6) ORGANIZATIONAL 15 DAY MAINT. ALLOWANCE				(7) DIRECT SUPPORT 30-DAY MAINT. ALLOWANCE			(8) GENERAL SUPPORT 30-DAY MAINT. ALLOWANCE			(9) 1 YR. ALW. PER 100 EQUIP/ CNTGCY PLAN-NING	(10) DEPOT MAINT. ALW PER 100 EQUIP	(11) ILLUS-TRATION (A) FIG NO.	(B) ITEM NO.
					(A) 1-5	(B) 6-20	(C) 21-50	(D) 51-100	(A) 1-20	(B) 21-50	(C) 51-100	(A) 1-20	(B) 21-50	(C) 51-00				
		2006 - MOUNTING BRACKETS -Continued																
P-O	2590-740-3983	CAP: moldboard tilt arm outer to bracket (8709448)	ea	2	*	*	*	*	*	*	*	*	*	*	5	*	D-30	4
P-O		BRACKET ASSEMBLY: moldboard left (8721286)	ea	2	*	*	*	*	*	*	*	*	*	*	3	*	D-30	5
P-O		BRACKET ASSEMBLY: moldboard right (8721287)	ea	1	*	*	*	*	*	*	*	*	*	*	3	*	D-30	5
P-O	2590-740-3994	SCREW: moldboard brackets to hull (8709454)	ea	8	*	*	*	*	*	*	1	*	*	1	14	144	D-30	6
P-O	5310-728-2038	NUT: moldboard brackets to hull (8715761)	ea	8	*	*	*	*	*	*	1	*	*	1	14	144	D-30	7
P-O	2590-740-3996	RETAINER: moldboard bracket and pin to eye (8715731)	ea	2	*	*	*	*	*	*	1	*	*	1	12	36	D-30	8
P-O	5310-637-9541	WASHER, LOCK: moldboard retainer to bracket (96906-35338-46)	ea	6	*	*	*	*	*	*	1	*	*	1	14	600	D-30	9
P-O	5305-269-3213	SCREW CAP HEXAGON HEAD: moldboard retainer to bracket (96906-90725-62	ea	6	*	*	*	*	*	*	1	*	*	1	14	78	D-30	10
P-O	2510-512-9202	PIN: moldboard bracket to eye (8709455)	ea	2	*	*	*	*	*	*	1	*	*	1	14	78	D-30	11
		2006 - MOLDBOARD CARRYING HOOKS AND CONTROL HANDLE																
P-O	2590-898-6091	HOOK: moldboard mechanical lifting cutter (8709802)	ea	2	*	*	*	*	*	*	1	*	*	1	6	18	D-31	1
P-O	2590-125-3844	SHAFT: moldboard hook (11590939)	ea	1	*	*	*	*	*	*	1	*	*	1	6	18	D-31	2
P-O	5315-616-5520	KEY: moldboard shaft (96906-35756-14)	ea	1	*	*	*	*	*	*	1	*	*	1	6	18	D-31	3
P-O	5315-842-3154	PIN: moldboard handle to arm (96906-35810-36)	ea	1	*	*	*	*	*	*	1	*	*	1	8	24	D-31	4
P-O	5340-200-6145	CLEVIS: moldboard handle to arm (144245)	ea	1	*	*	*	*	*	*	1	*	*	1	8	24	D-31	5
P-O	5310-834-8734	NUT: moldboard lifting outer hook handle jam (96906-35691-37)	ea	1	*	*	*	*	*	*	1	*	*	1	6	18	D-31	6
P-O		HANDLE ASSEMBLY: moldboard lifting cutter hook (8744885)	ea	1	*	*	*	*	*	*	1	*	*	1	6	18	D-31	7
X20		SUPPORT: moldboard handle (8744886)	ea	1	*	*	*	*	*	*	*	*	*	*	0	0	D-31	8
P-O	5315-839-5822	PIN: moldboard handle to arm (96906-24665-353)	ea	1	*	*	*	*	*	*	1	*	*	1	8	24	D-31	9
P-O	5305-813-3104	SCREW: moldboard hook to shaft (96906-51054-741	ea	2	*	*	*	*	*	1	*	*	*	1	12	36	D-31	10

(1) SMR CODE	(2) FEDERAL STOCK NO.	(3) DESCRIPTION	(4) UNIT OF MEAS-URE	(5) QTY. INC. IN UNIT	(6) ORGANIZATIONAL 15 DAY MAINT. ALLOWANCE				(7) DIRECT SUPPORT 30-DAY MAINT. ALLOWANCE			(8) GENERAL SUPPORT 30-DAY MAINT. ALLOWANCE			(9) 1 YR. ALW. PER 100 EQUIP/ CNTGCY PLAN-NING	(10) DEPOT MAINT. ALW PER 100 EQUIP	(11) ILLUS-TRATION	
					(A) 1-5	(B) 6-20	(C) 21-50	(D) 51-100	(A) 1-20	(B) 21-50	(C) 51-100	(A) 1-20	(B) 21-50	(C) 51-00			(A) FIG NO.	(B) ITEM NO.
		2006 - MOLDBOARD CARRYING HOOKS AND CONTROL. HANDLE -Continued																
P-O	5310-834-8732	NUT, LOCKING: moldboard hook to shaft (96906-35691-33)	ea	2	*	*	*	*	*	*	1	*	*	1	12	36	D-31	11
P-O	2590-740-3981	ARM: moldboard handle (8709801)	ea	1	*	*	*	*	*	1	*	*	*	1	6	18	D-31	12
P-O	5310-584-5272	WASHER, LOCK: moldboard arm retaining (90906-35338-48)	ea	1	*	*	*	*	*	*	1	*	*	1	6	100	D-31	13
P-O	5305-716-8128	SCREW CAP HEXAGON HEAD: moldboard arm retaining (96906-90725-117)	ea	1	*	*	*	*	*	*	1	*	*	1	6	18	D-31	14
		GROUP 22 - BODY CHASSIS OR HULL, AND ACCESSORY ITEMS																
		NON-ILLUSTRATED ITEMS																
		2210 - DATA PLATES																
P20		PLATE: bulldozer earth moving (11645200)	ea	1	*	*	*	*	*	*	*	*	*	*	5	*		
P20		PLATE: bulldozer earth moving (11645195)	ea	1	*	*	*	*	*	*	*	*	*	*	5	*		
P20		PLATE: bulldozer earth moving (10944911)	ea	1	*	*	*	*	*	*	*	*	*	*	5	*		

(1) SMR CODE	(2) FEDERAL STOCK NO.	(3) DESCRIPTION	(4) UNIT OF MEAS-URE	(5) QTY. INC. IN UNIT	(6) ORGANIZATIONAL 15 DAY MAINT. ALLOWANCE				(7) DIRECT SUPPORT 30-DAY MAINT. ALLOWANCE			(8) GENERAL SUPPORT 30-DAY MAINT. ALLOWANCE			(9) 1 YR. ALW. PER 100 EQUIP/ CNTGCY PLAN-NING	(10) DEPOT MAINT. ALW PER 100 EQUIP	(11) ILLUS-TRATION	
					(A) 1-5	(B) 6-20	(C) 21-50	(D) 51-100	(A) 1-20	(B) 21-50	(C) 51-100	(A) 1-20	(B) 21-50	(C) 51-00			(A) FIG NO.	(B) ITEM NO.
	5180-661-1715	TOOL KIT, BULLDOZER: Special Kit B: one per battalion and regimental headquarters (except when battalion or regiment has a service company; service company, numbered battery, company; and similar headquarters performing maintenance work for other units (7992639) The items listed hereunder are components of the above Tool Kit and may be requisitioned under their individual stockage numbers Stockage of components of this Tool Kit which are duplicated in basic kits for other type vehicles assigned by TOE is not required beyond actual need.		1														
P-O	5120-628-0986	WRENCH, OPEN END, FIXED: single-head type, 1-23 / 32-inch opng., 60-deg. angle of head, 16-in. nom. overall lg., 1 / 2-in. thk of head (flexible hydraulic oil line nuts) (6280986)	ea	1														
P-O	5120-795-0898	REPLACER, BEARING: 0.990 and 1.40 dia., 7 lg. (to install oil pump drive shaft sea seat)	ea	1														
P-F	5180-661-1716	FIELD MAINTENANCE: (direct support), special, for bulldozer (7992640)	ea	1														
P-H	5180-661-1717	FIELD MAINTENANCE:(general support), special, for bulldozer (7992641)	ea	1														
P-D	5180-661-1718	FIELD MAINTENANCE:(depot maintenance), special, for bulldozer (7992642)	ea	1														
P-F	5120-293-0798	WRENCH, SPANNER: adjustable face (96906-16146-2)	ea	1						1	1	1	1	1	6	*	4-1	
P-F	5120-907-9001	WRENCH, SPANNER: (10952095)	ea	1						1	1	1	1	1	6	*	4-1	

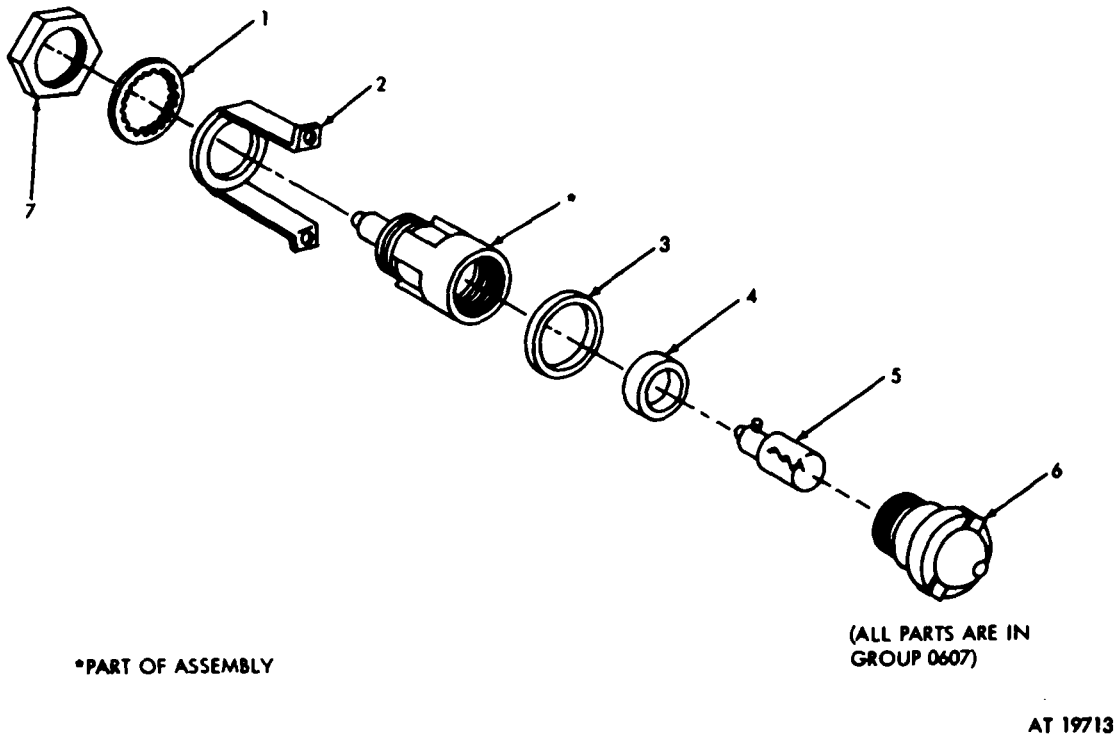

Figure D-2. Lead assembly 10961610 - exploded view.

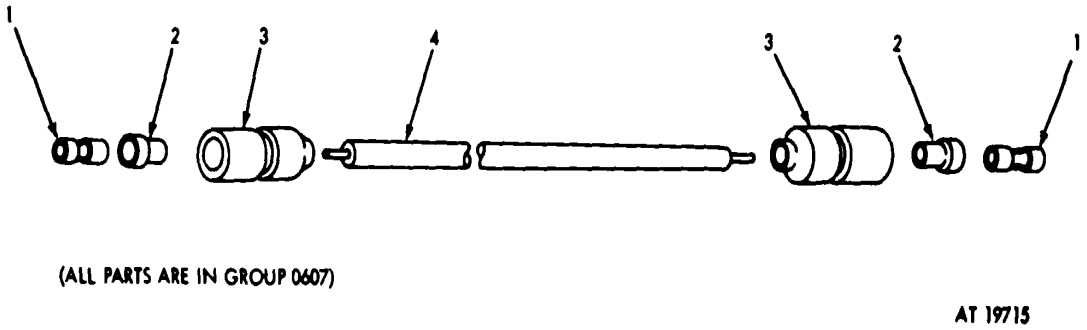

Figure D-3. Lead assembly 10916609 - exploded view.

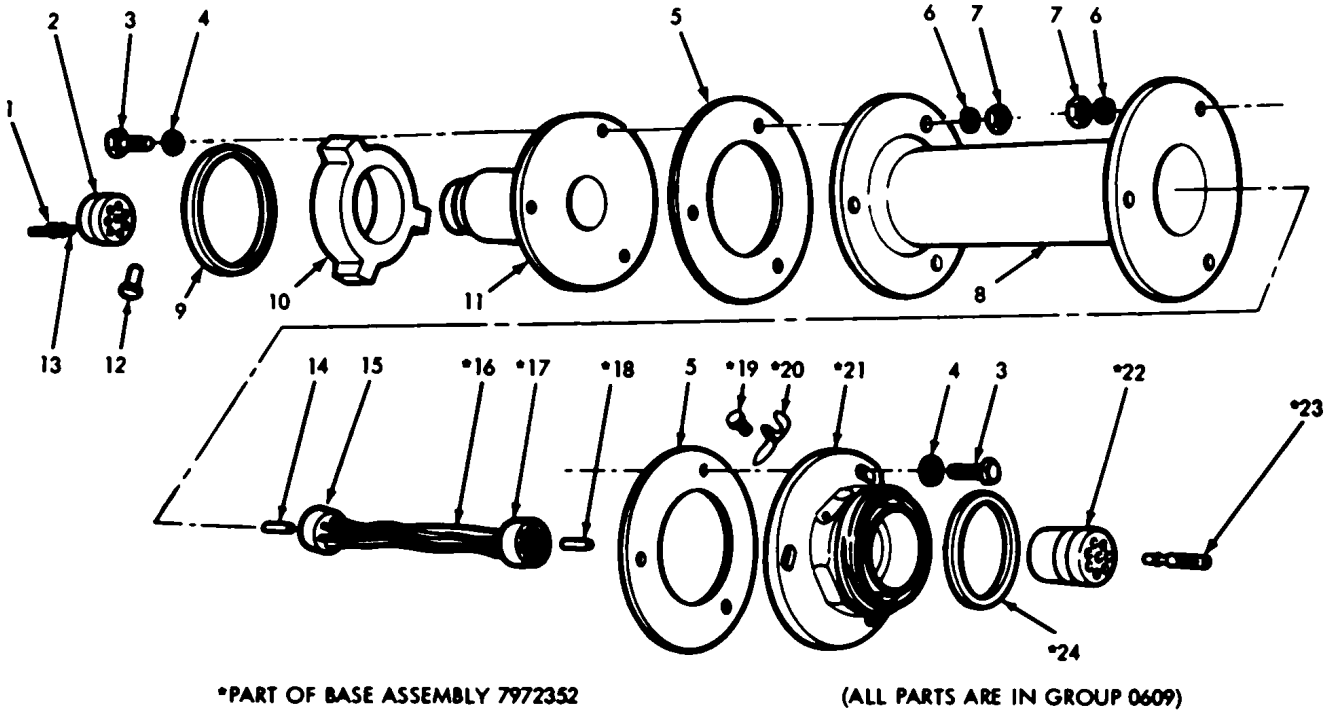

Figure D-4. Headlight adapter assembly - exploded view.

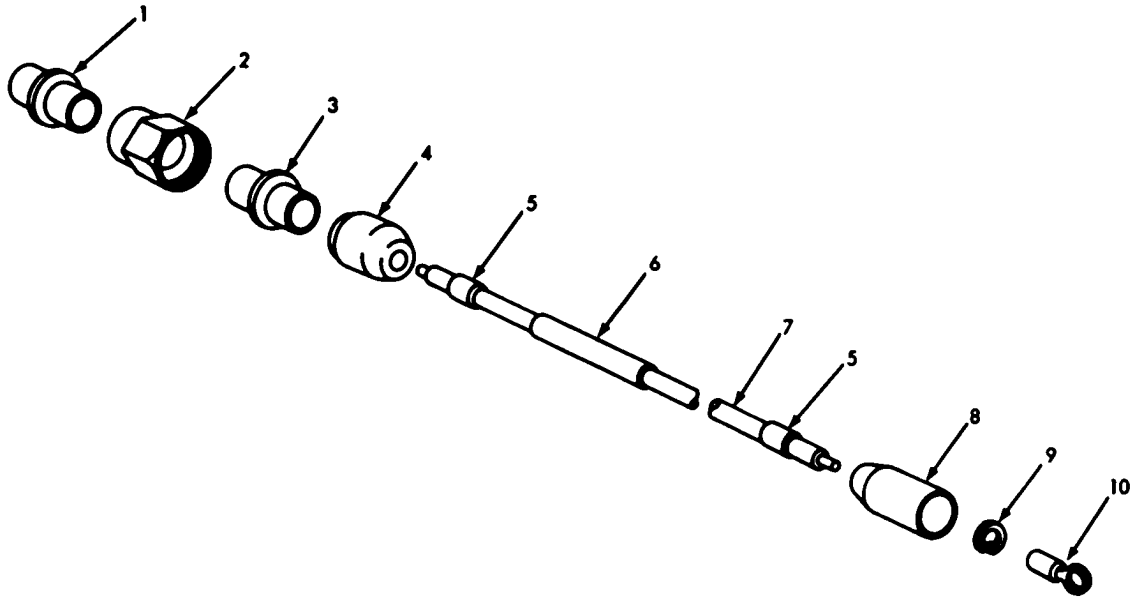

(ALL PARTS ARE IN GROUP 0613)

AT 19717

Figure D-5. Lead assembly 10951611 - exploded view.

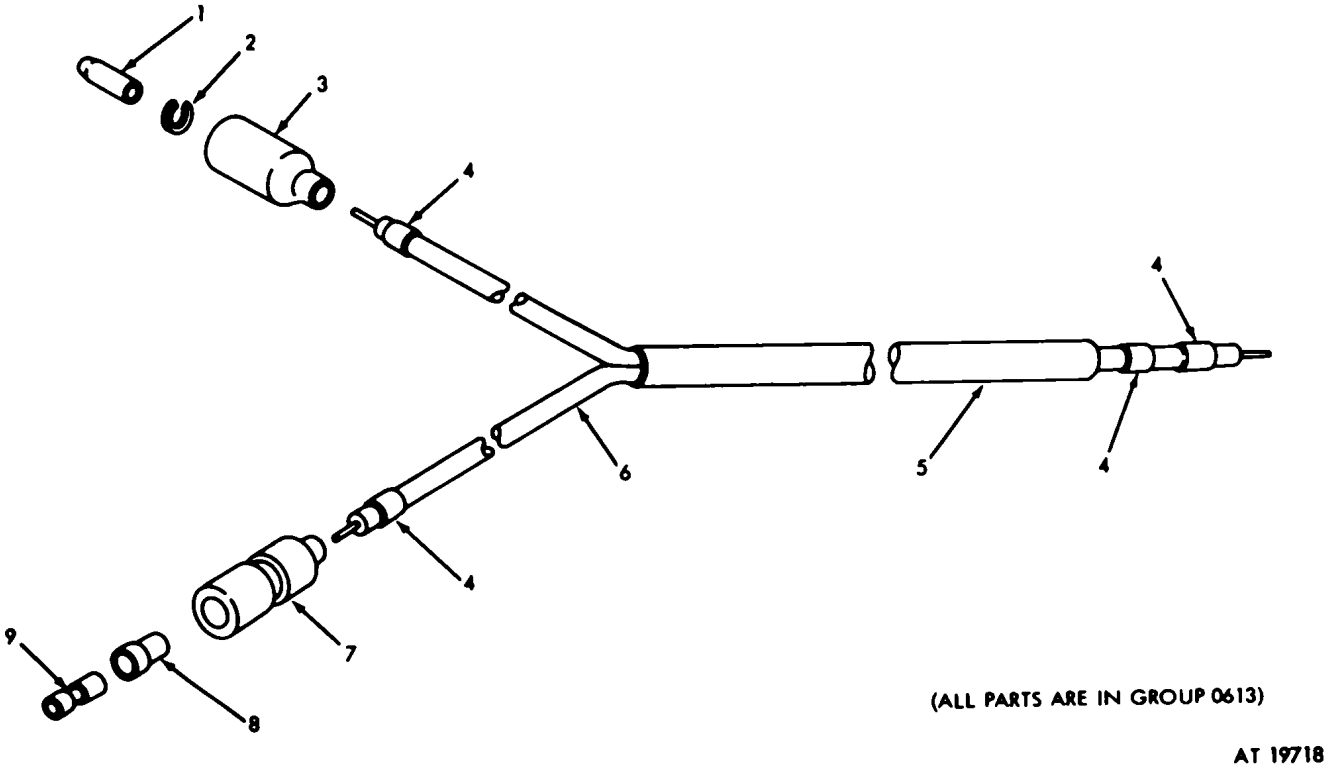

Figure D-6. Load assembly 10951612 - exploded view.

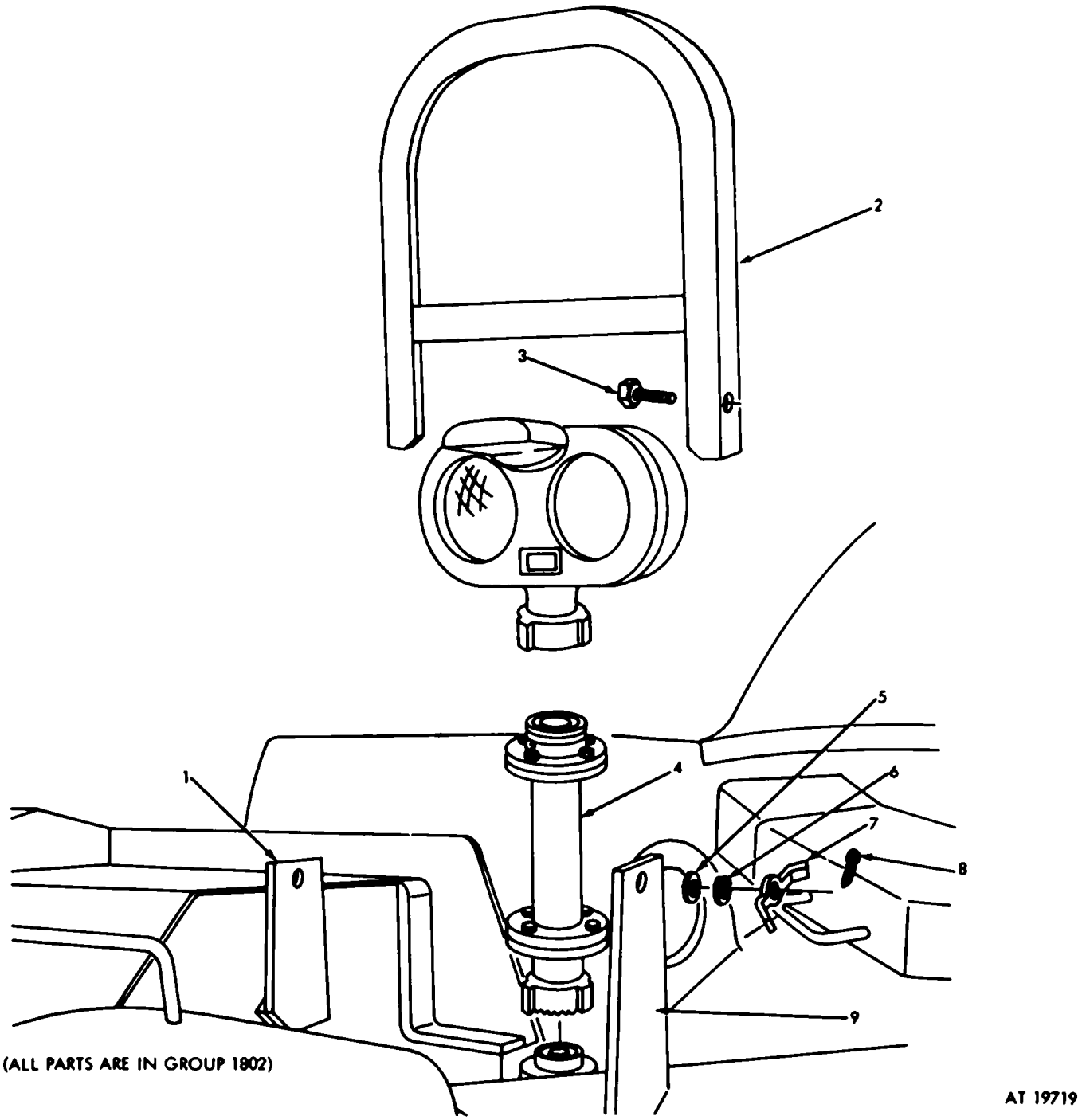

Figure D-7. Headlight assembly - exploded view.

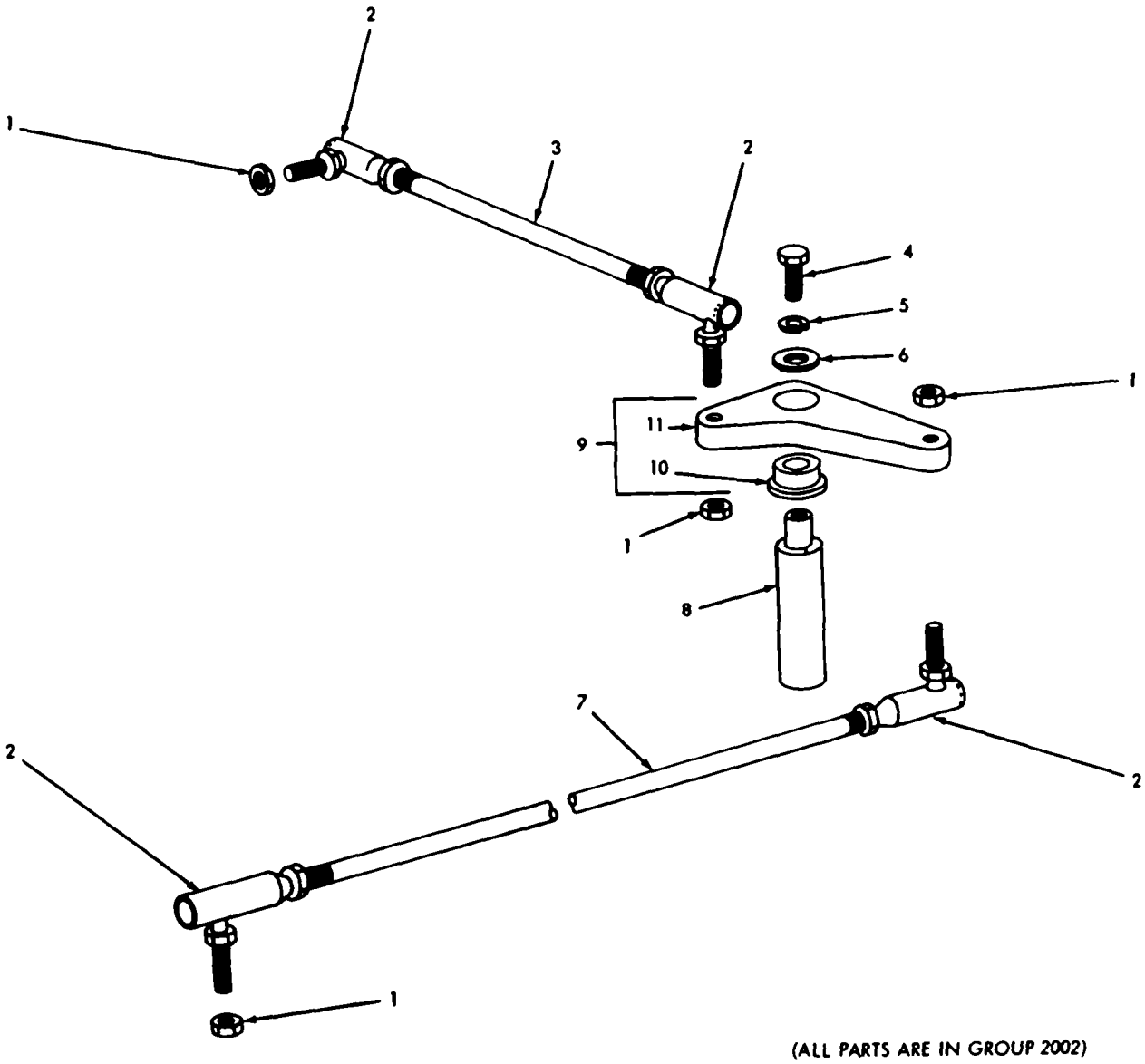

AT 19720

Figure D-8. Control linkage - exploded view.

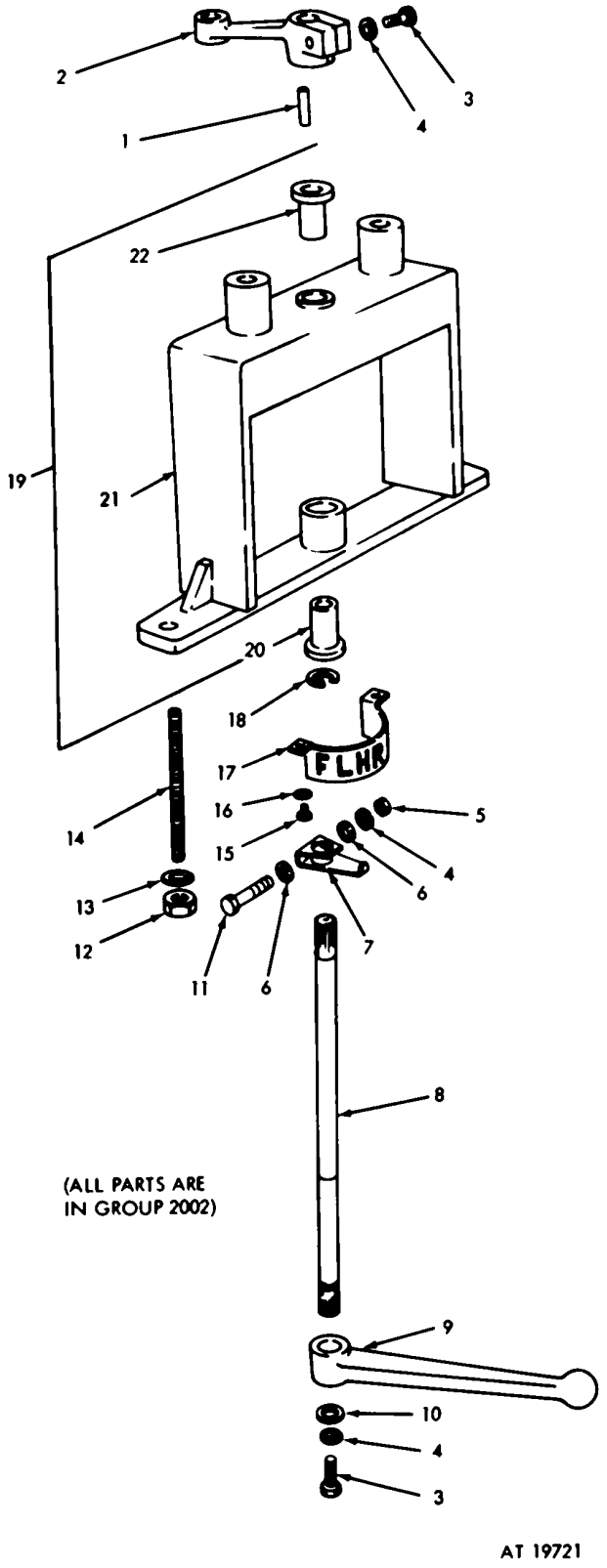

Figure D-9. Control box assembly - exploded view.

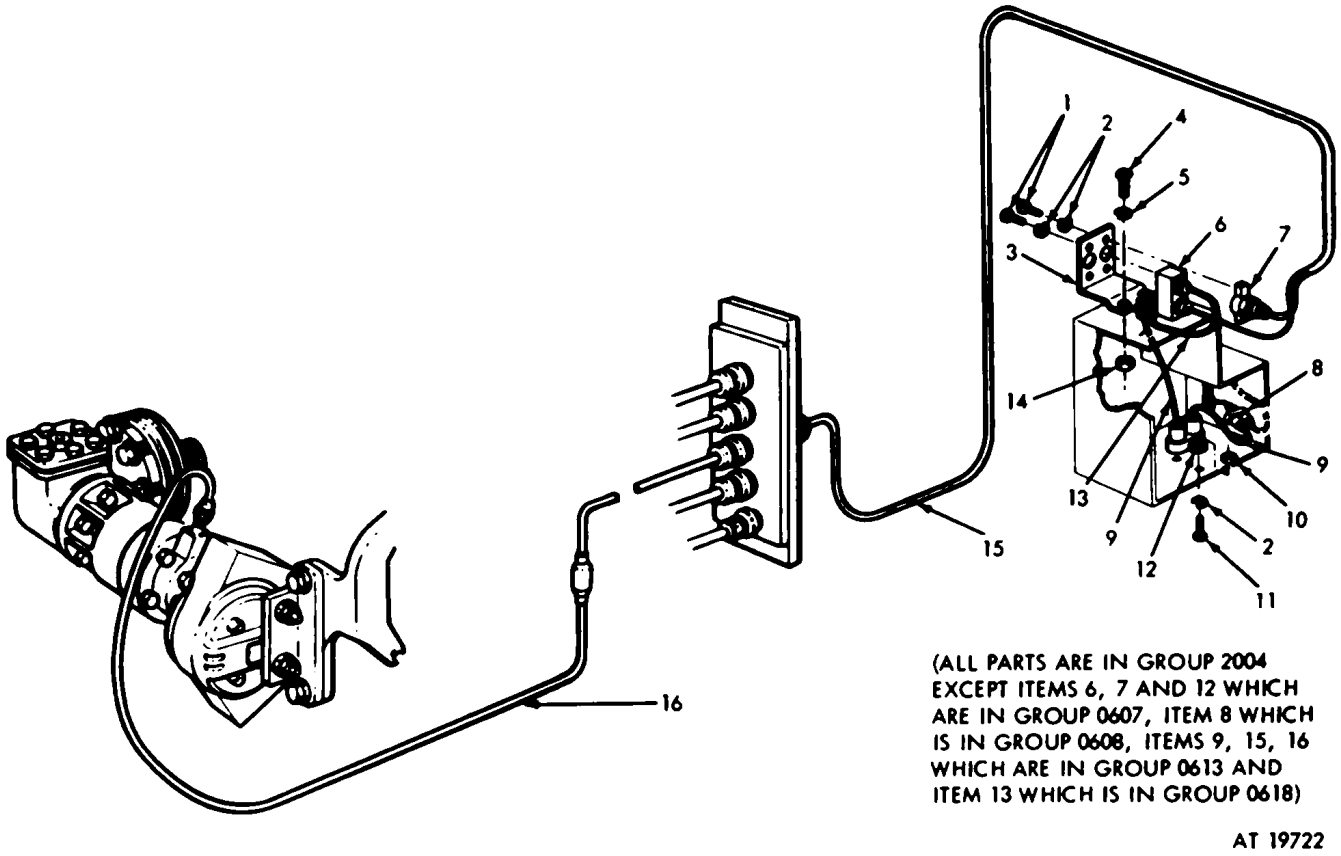

Figure D-10. Electro-magnetic clutch electrical system - exploded view.

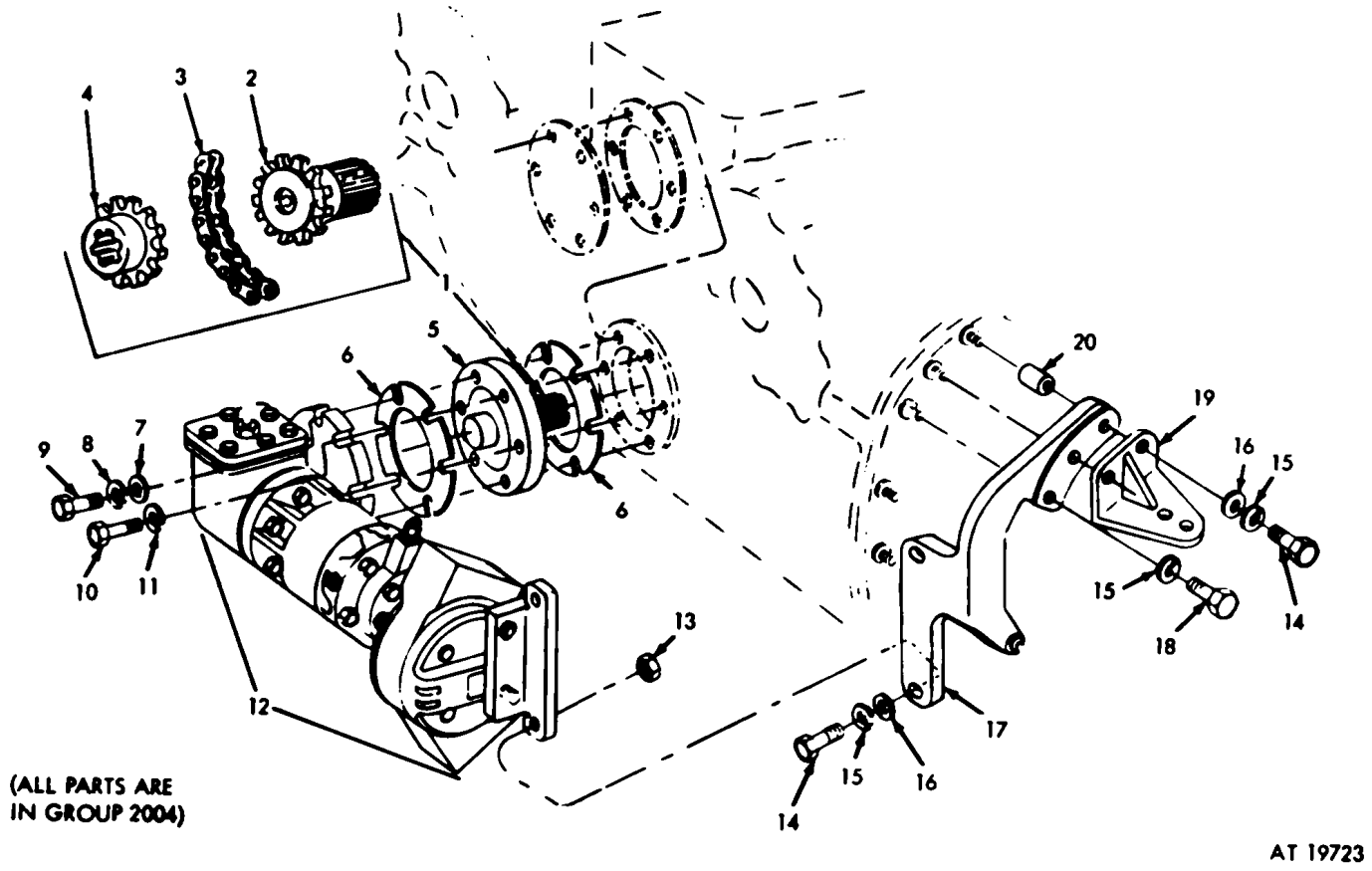

Figure D-11. Power take-off assembly, mounting brackets, sprocket assembly and related parts-partial exploded view.

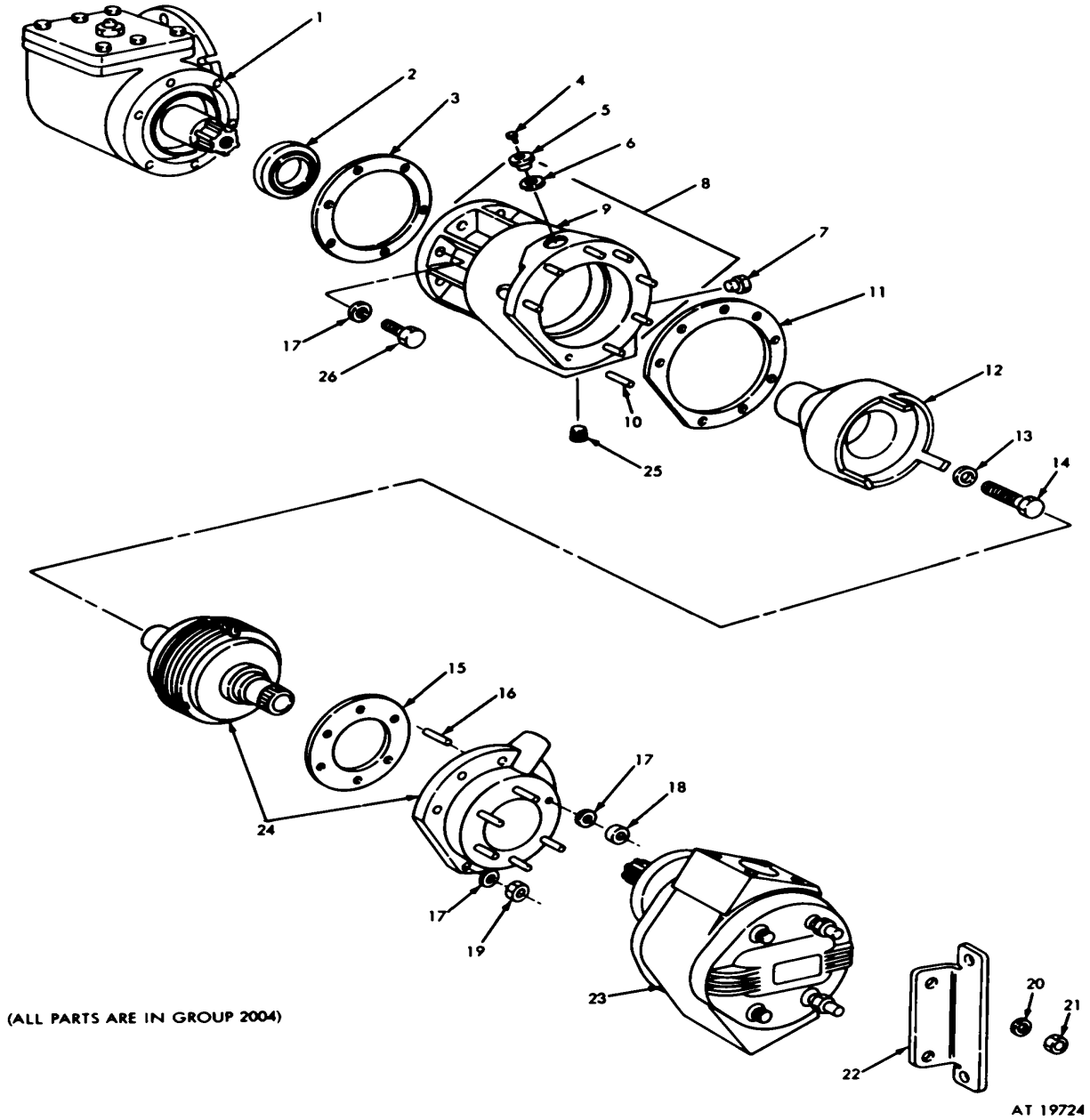

Figure D-12. Power take-off assembly and mounting bracket-partial exploded view.

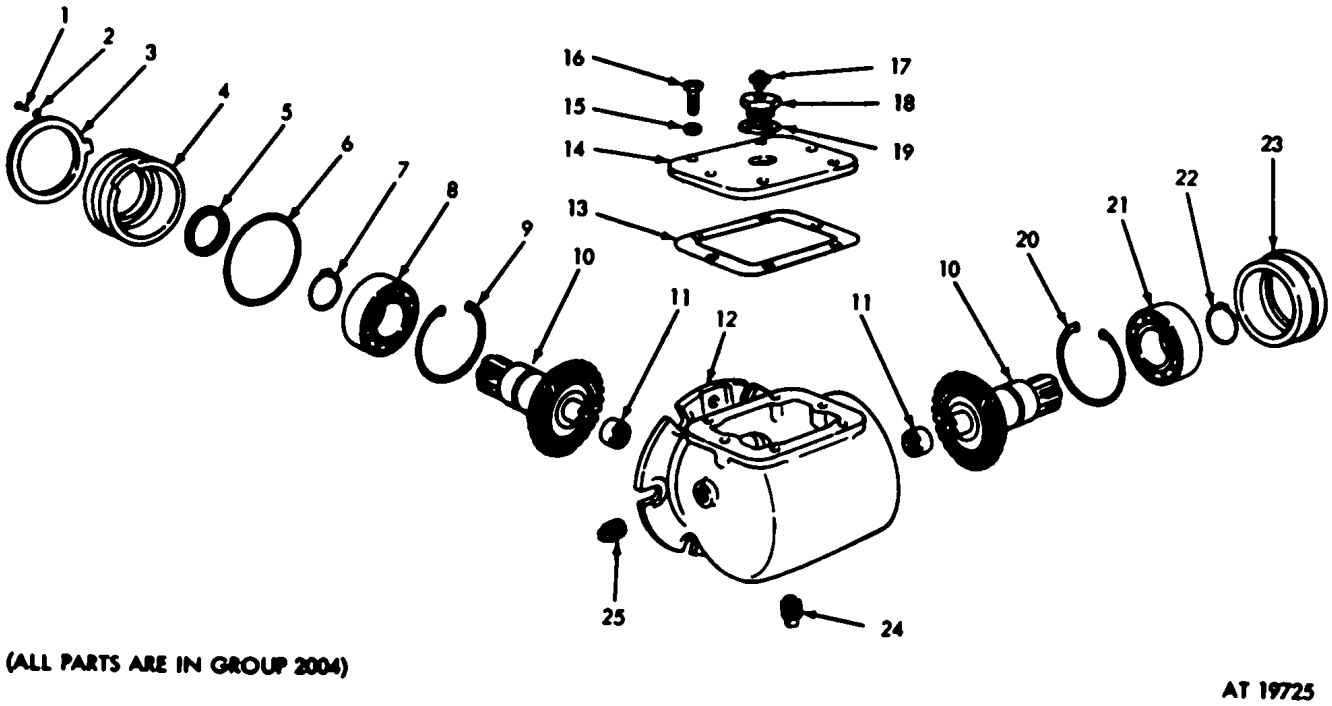

Figure D-13. Right-angle drive-exploded view.

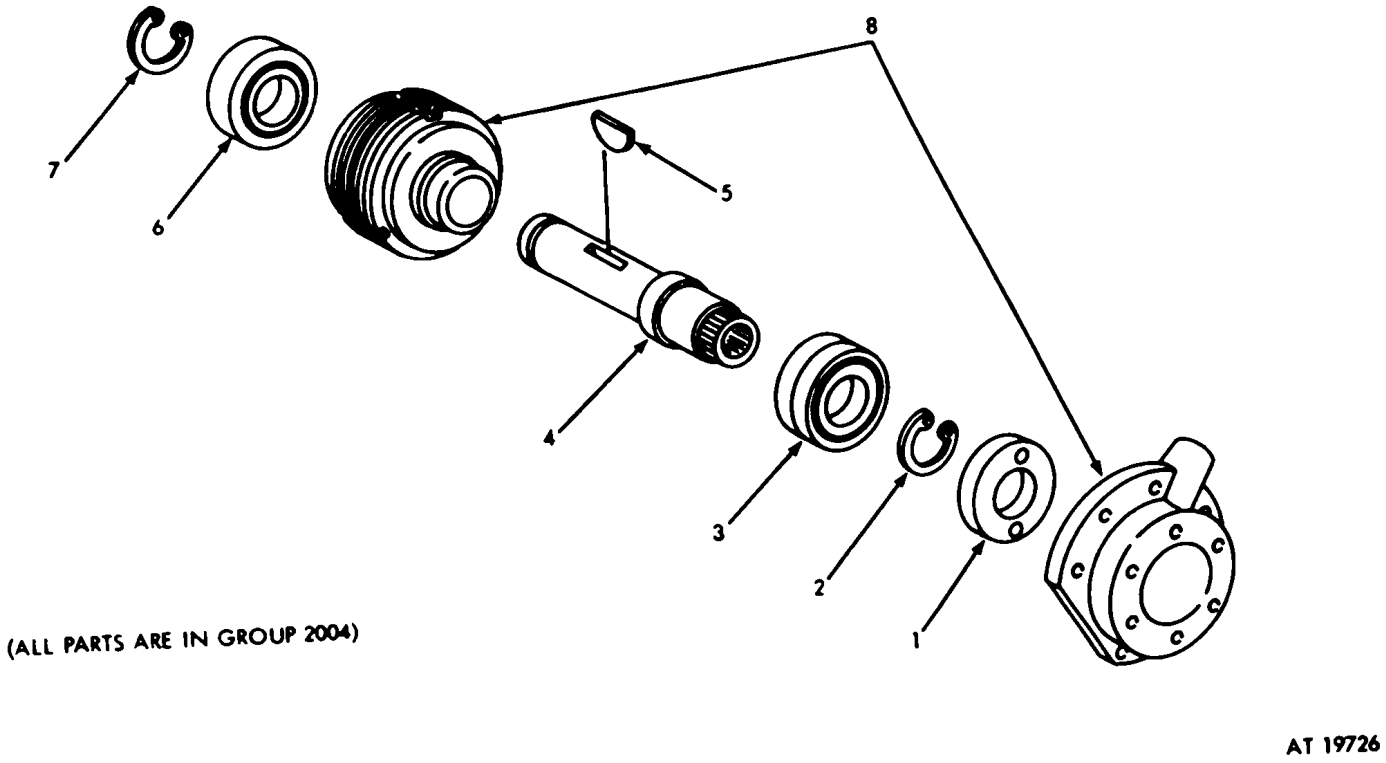

Figure D-14. Clutch assembly power take-off-exploded view.

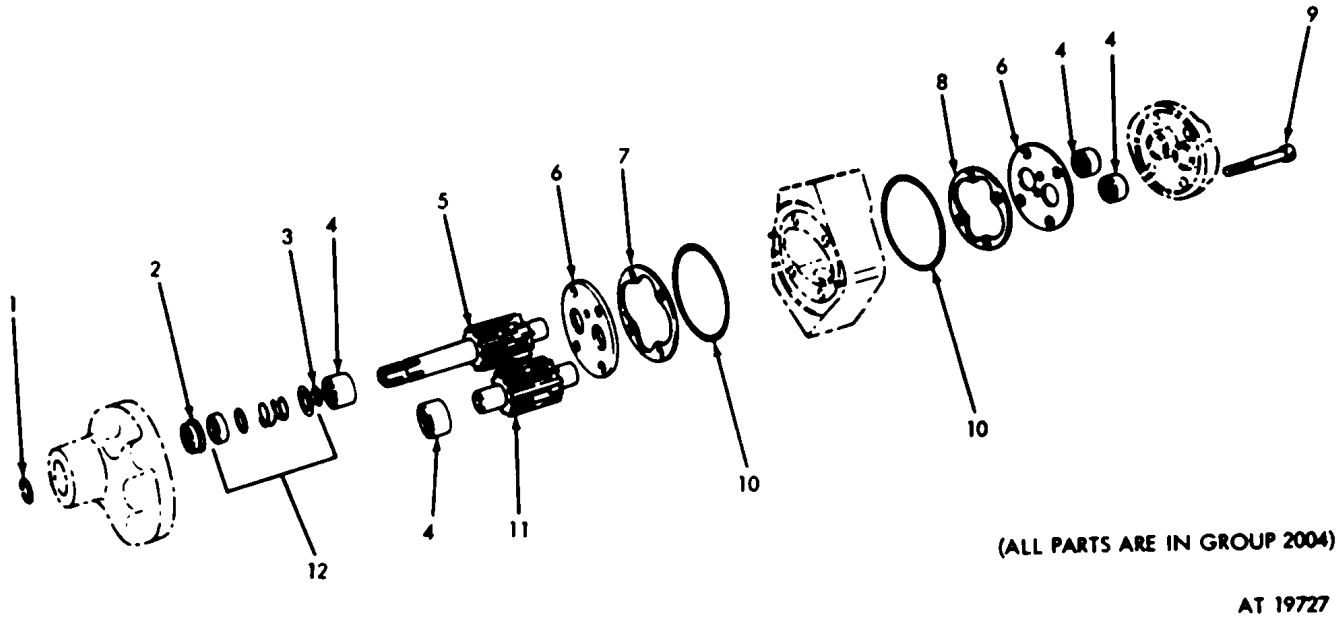

Figure D-15. Hydraulic pump assembly-exploded view.

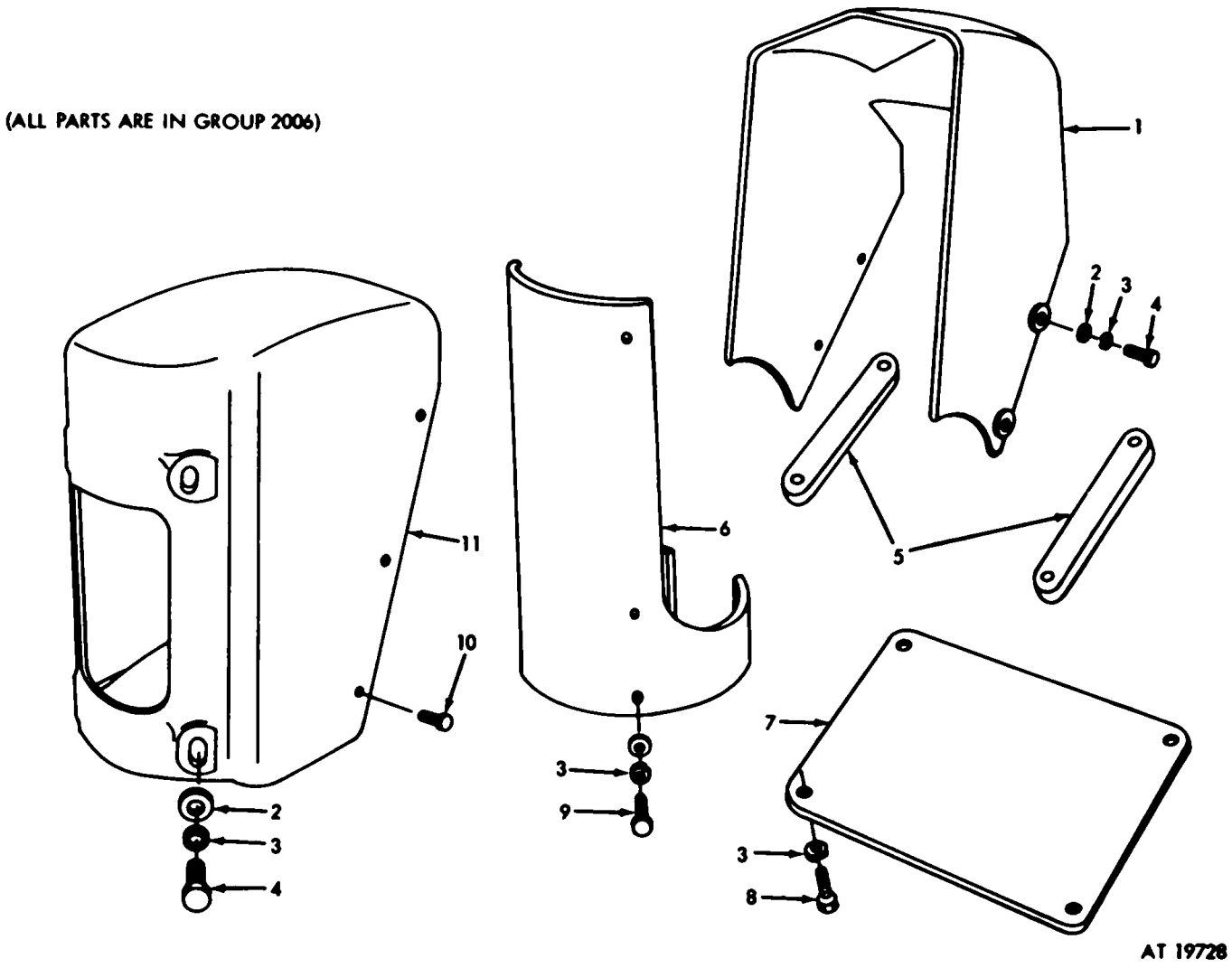

Figure D-16. Cylinder armor guards right and left-exploded view.

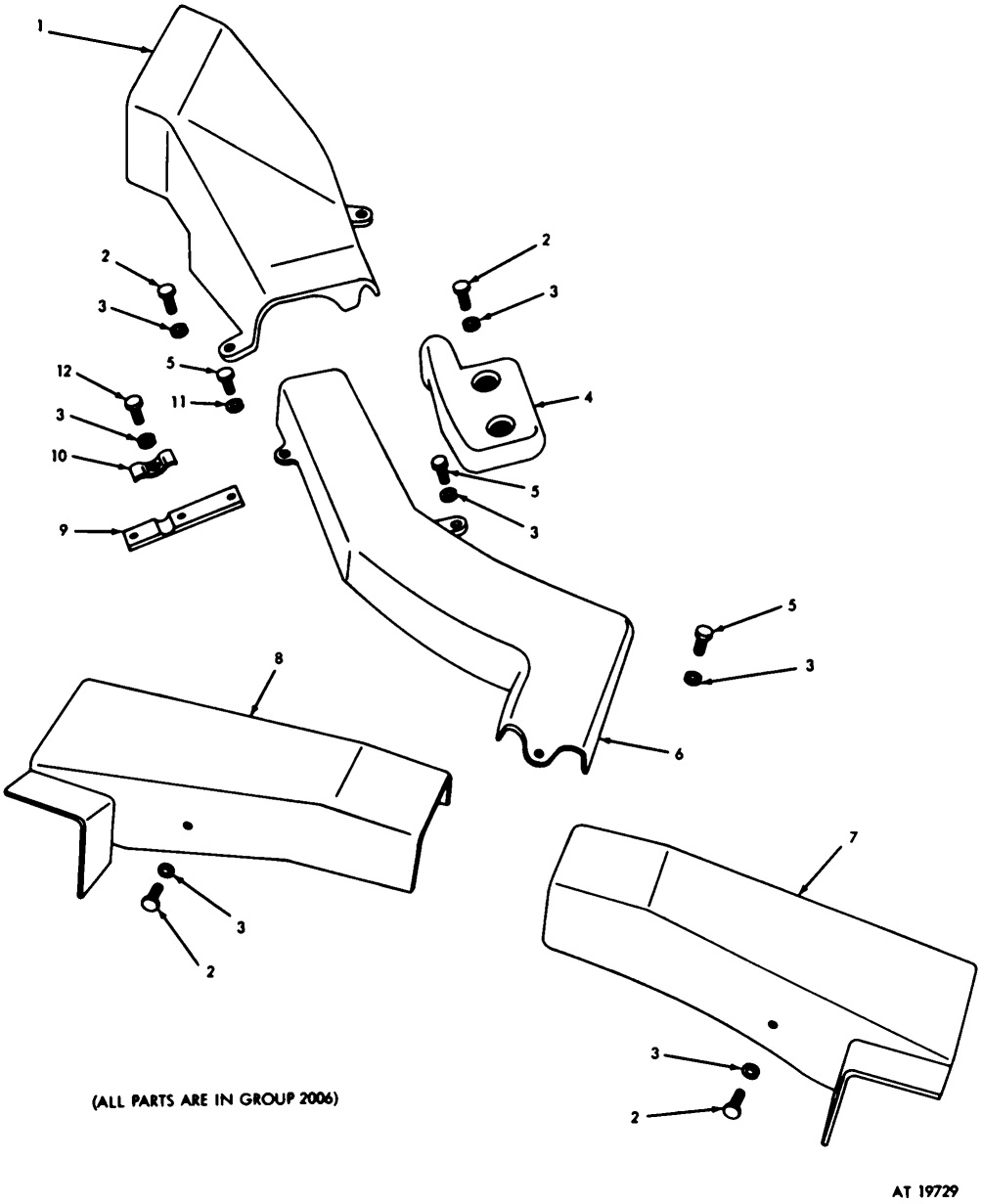

Figure D-17. Hydraulic system armor guards (sheet 1 of 5)-partial exploded view.

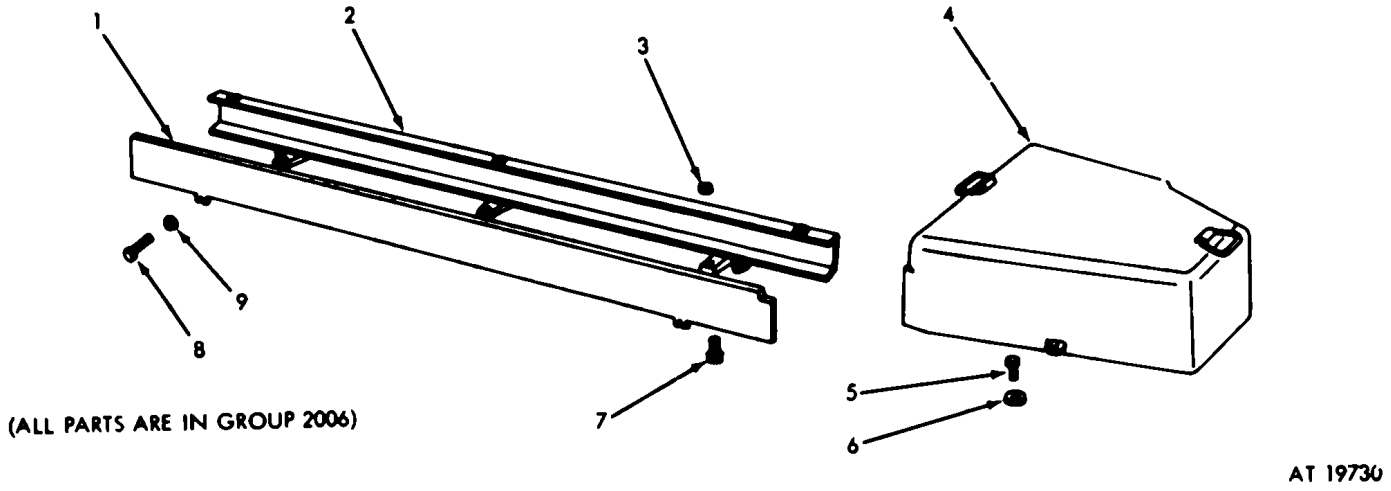

Figure D-18. Hydraulic system armor guards (sheet 2 of 5)-partial exploded view.

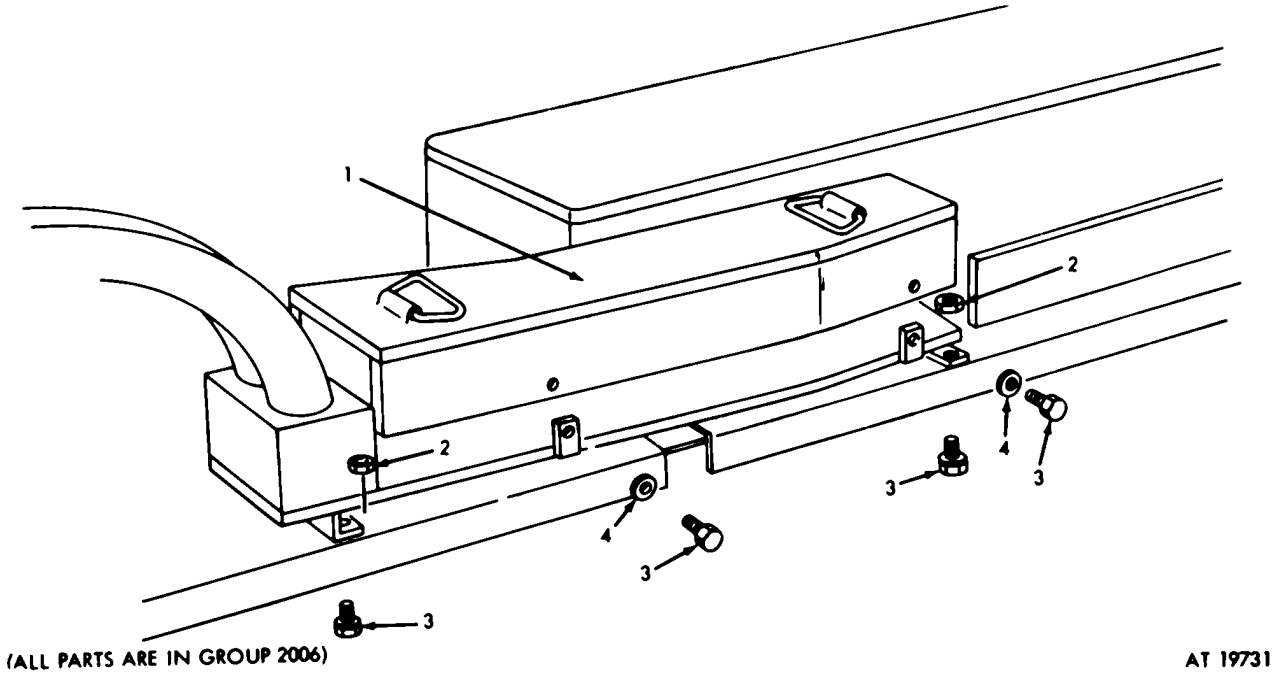

Figure D-19. Hydraulic system armor guards (sheet 3 of 5)-partial exploded view.

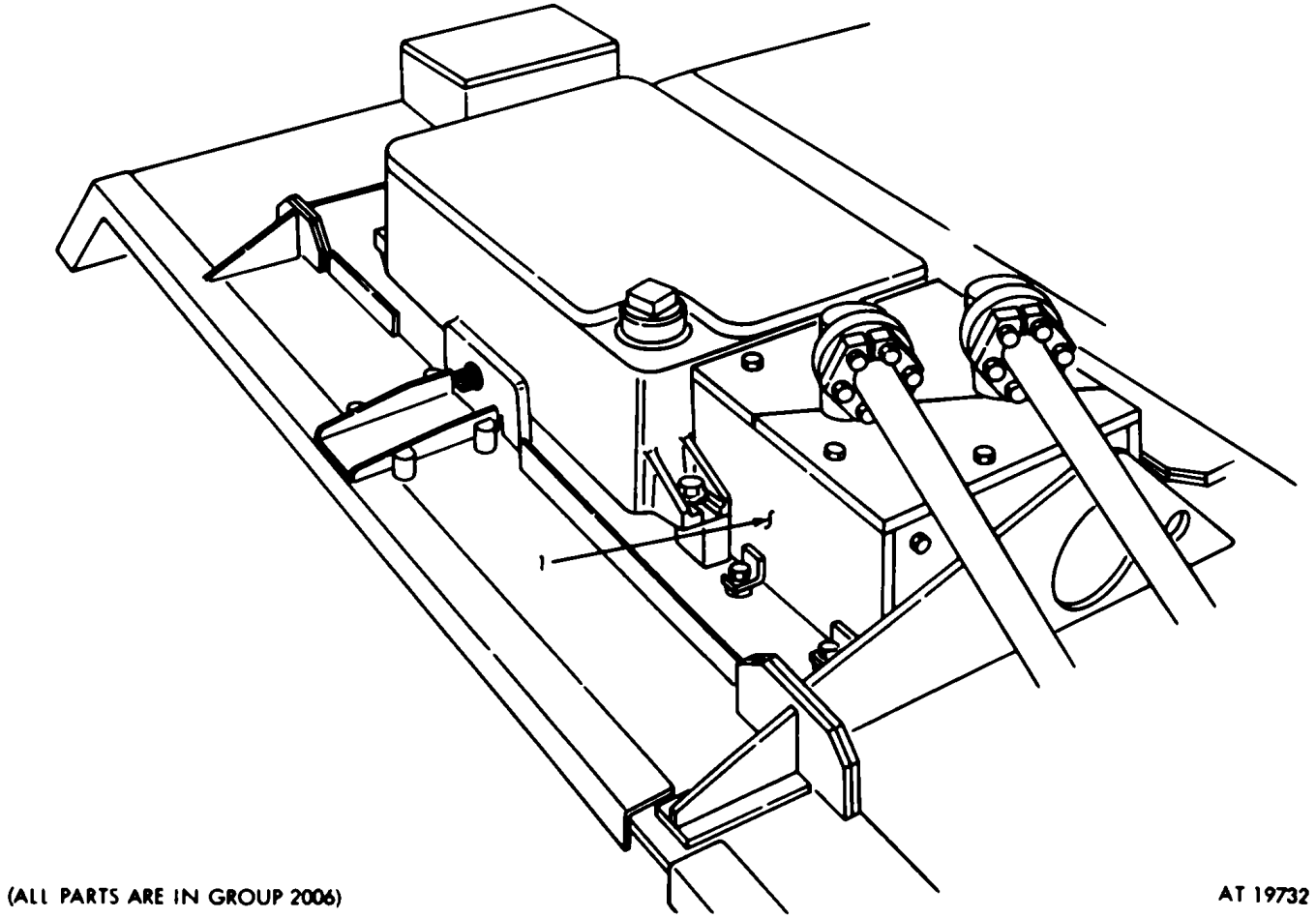

Figure D-20. Hydraulic system armor guards (sheet 4 of 5)-partial exploded view.

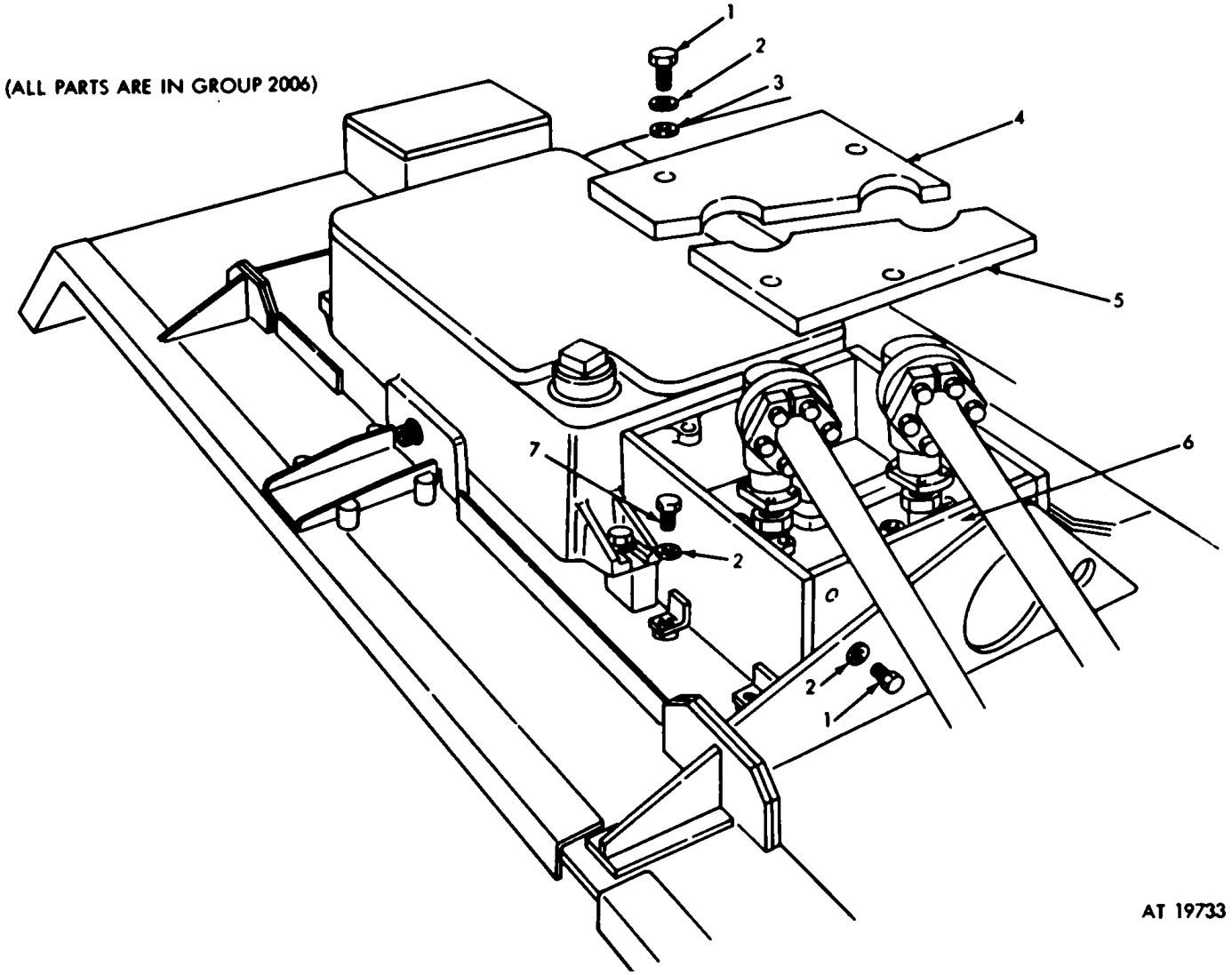

Figure D-21. Hydraulic system armor guards (sheet 5 of 5)-partial exploded view.

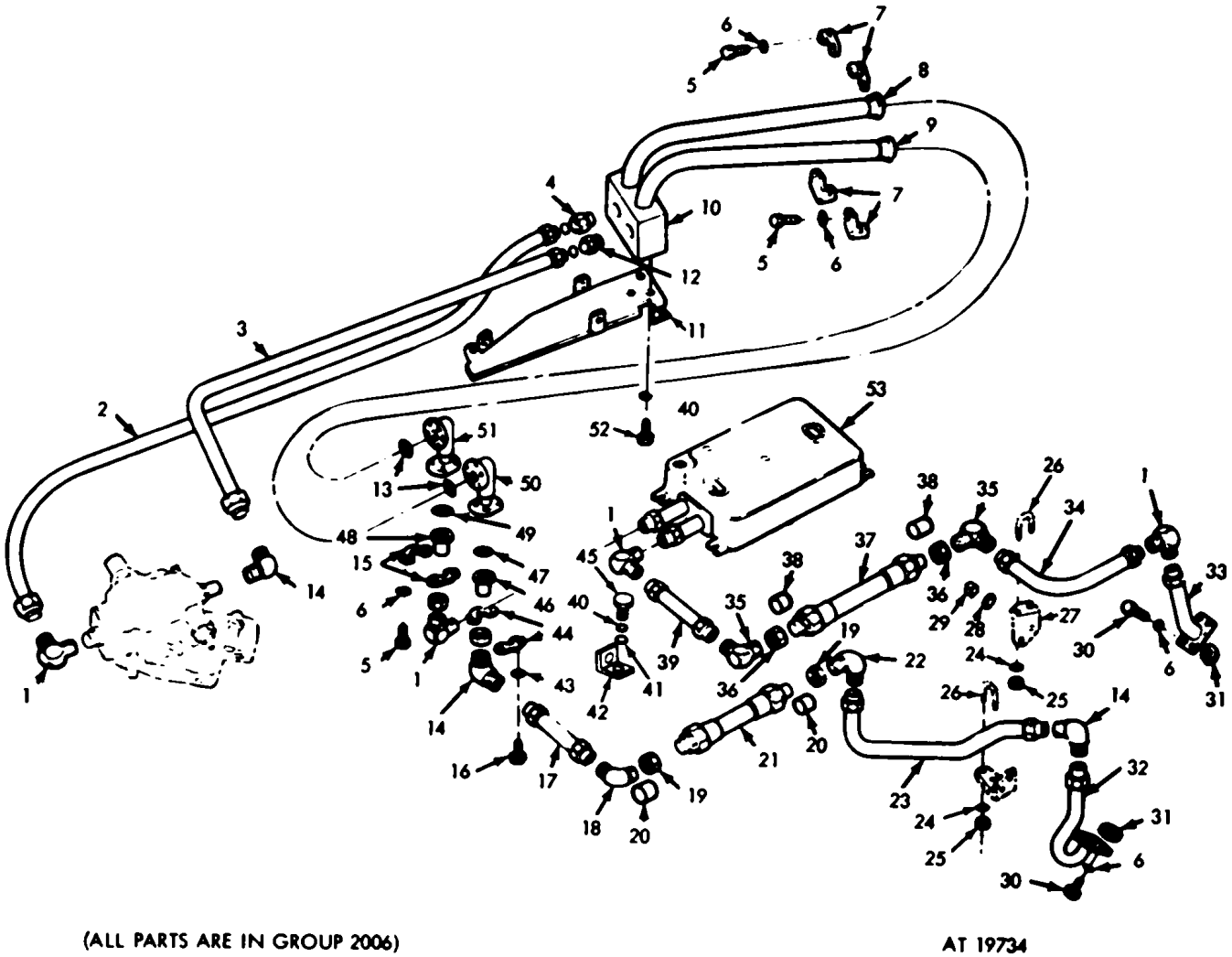

Figure D-22. Hydraulic hoses, lines, tubes, fittings, and valves (sheet 1 of 2)-partial exploded view.

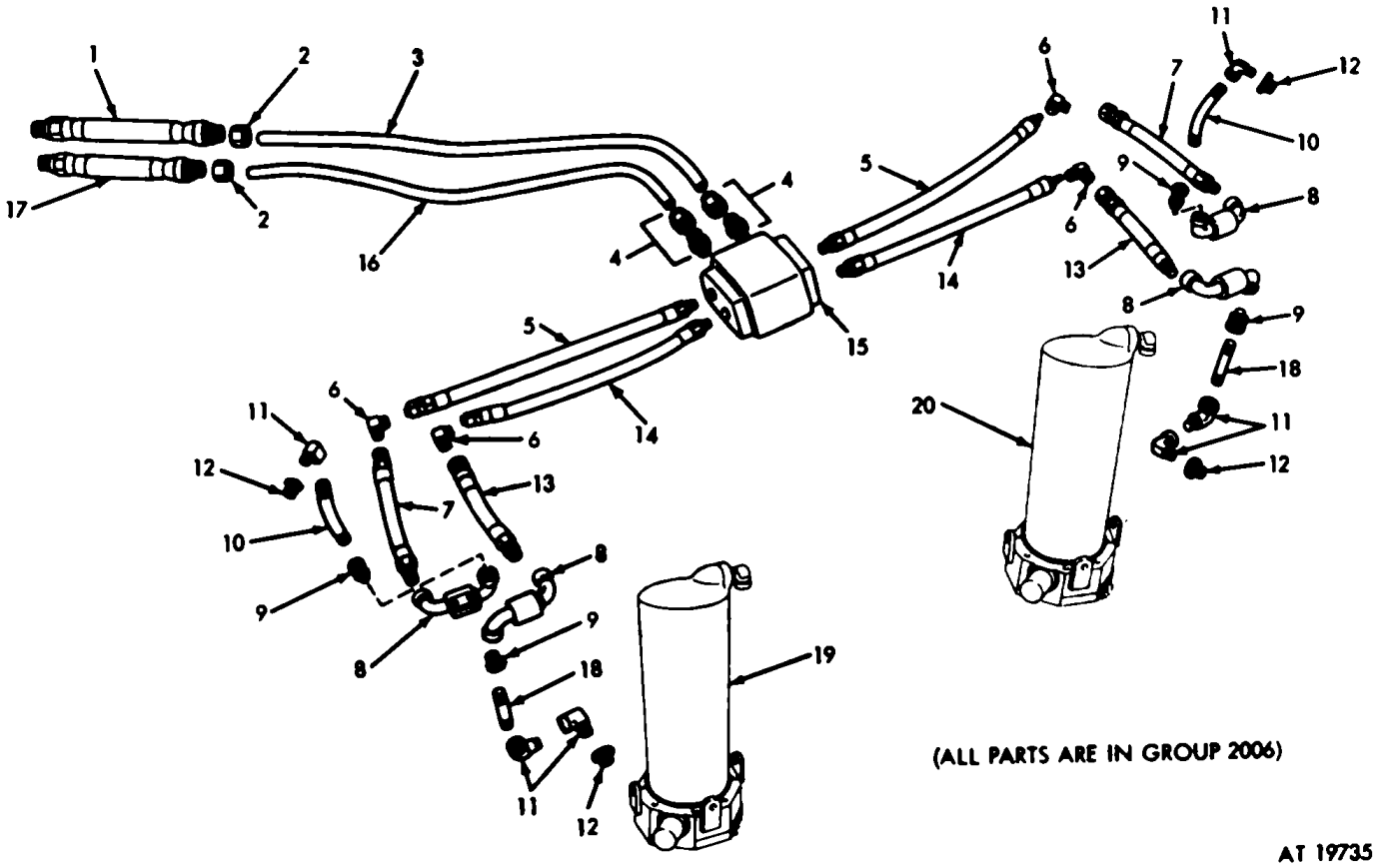

Figure D-23. Hydraulic hoses, lines, tubes, fittings, and valves (sheet 2 of 2)-partial exploded view.

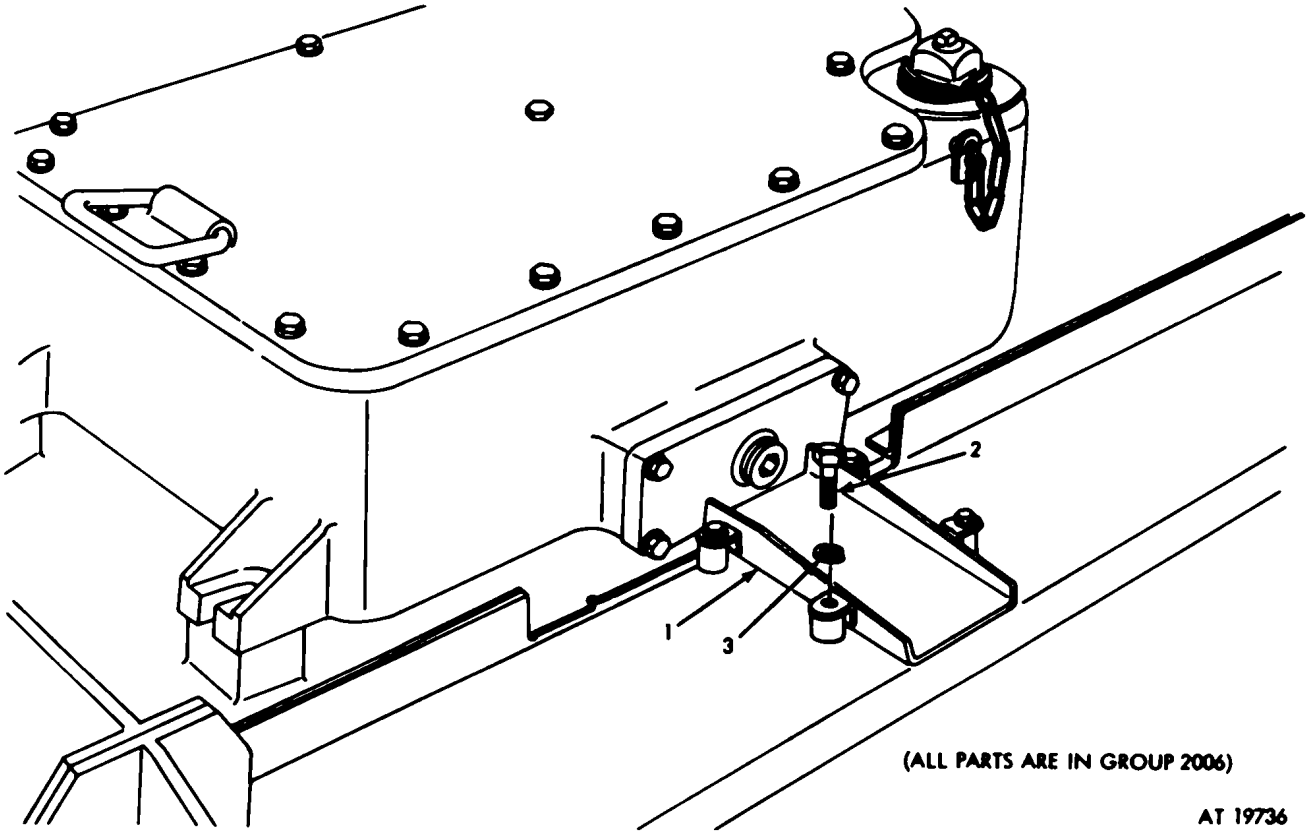

Figure D-24. Hydraulic reservoir drain trough assembly.

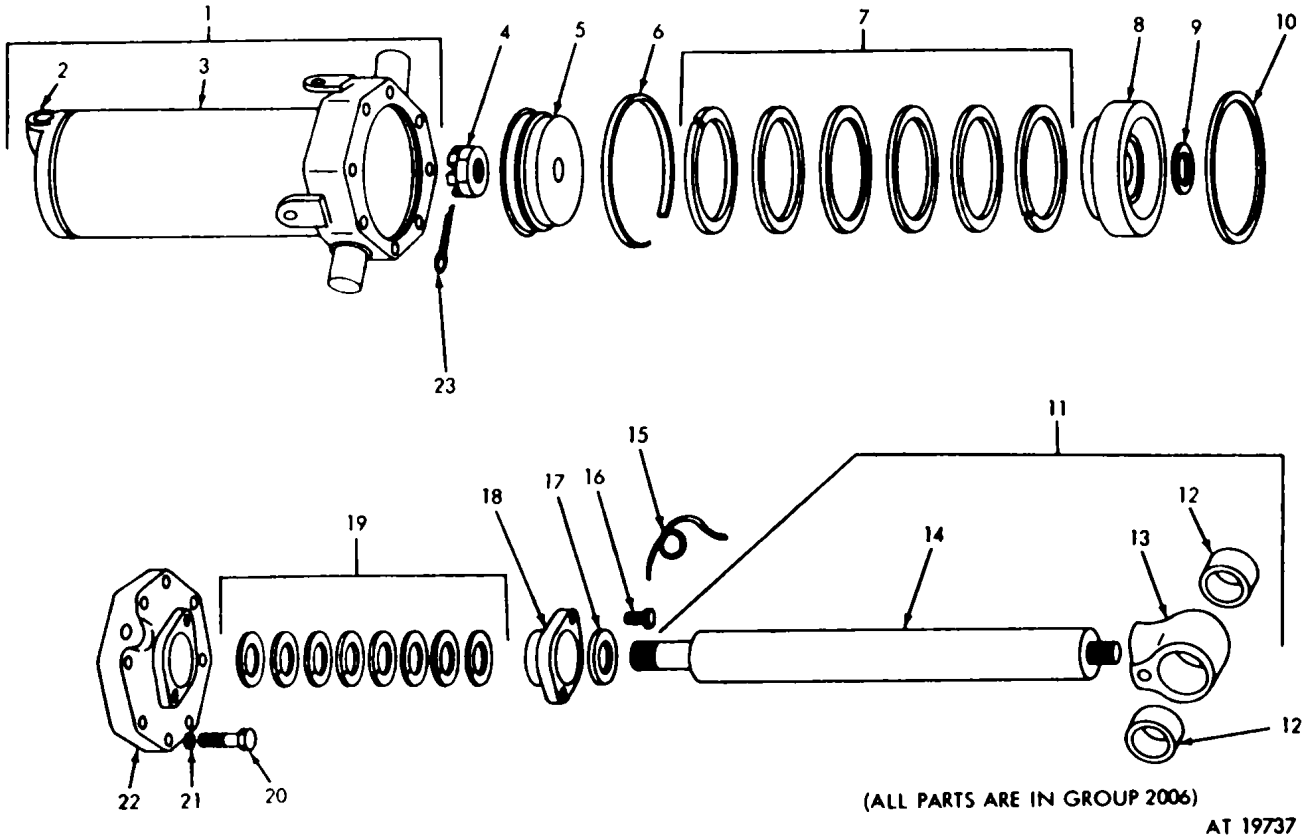

Figure D-25. Hydraulic cylinder and ram assembly -- exploded view.

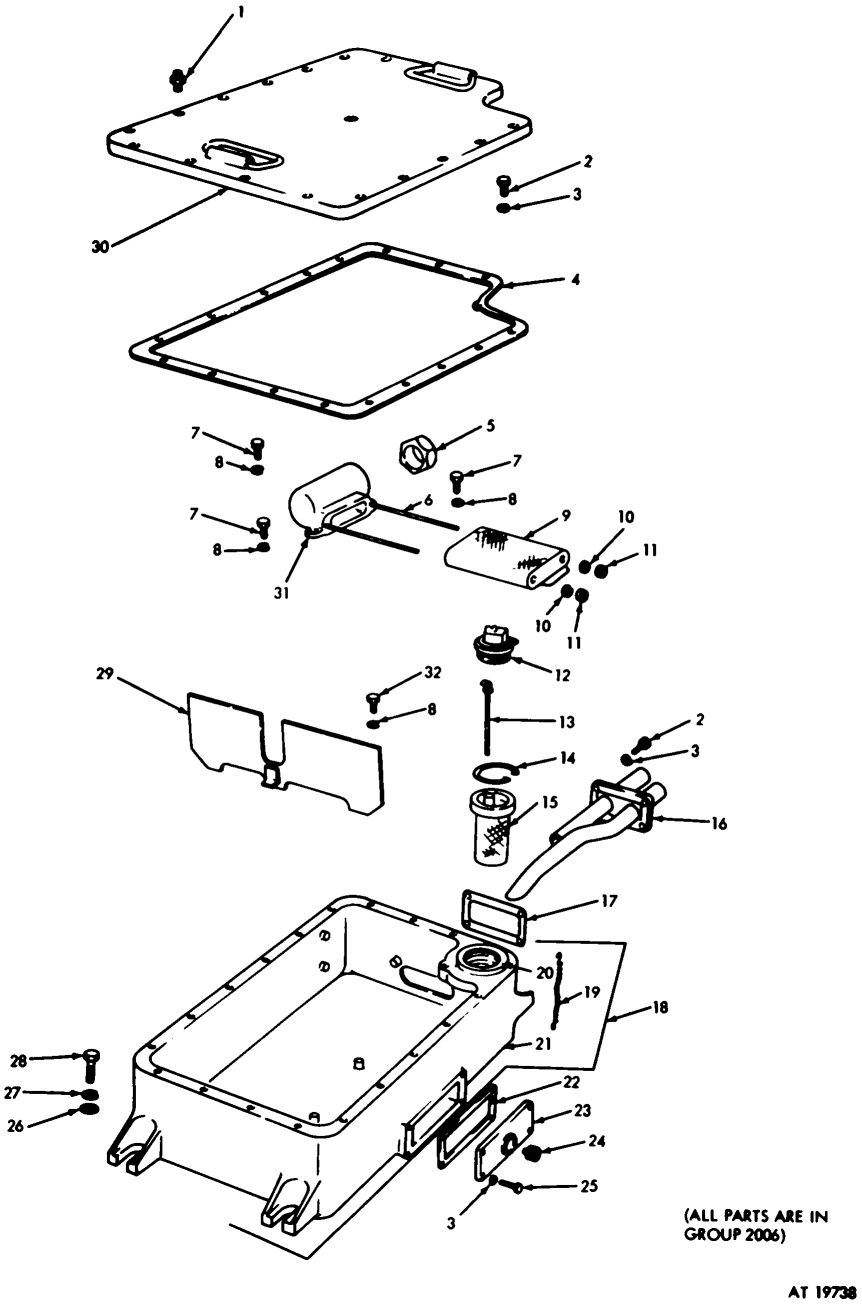

Figure D-26. Hydraulic reservoir assembly-exploded view.

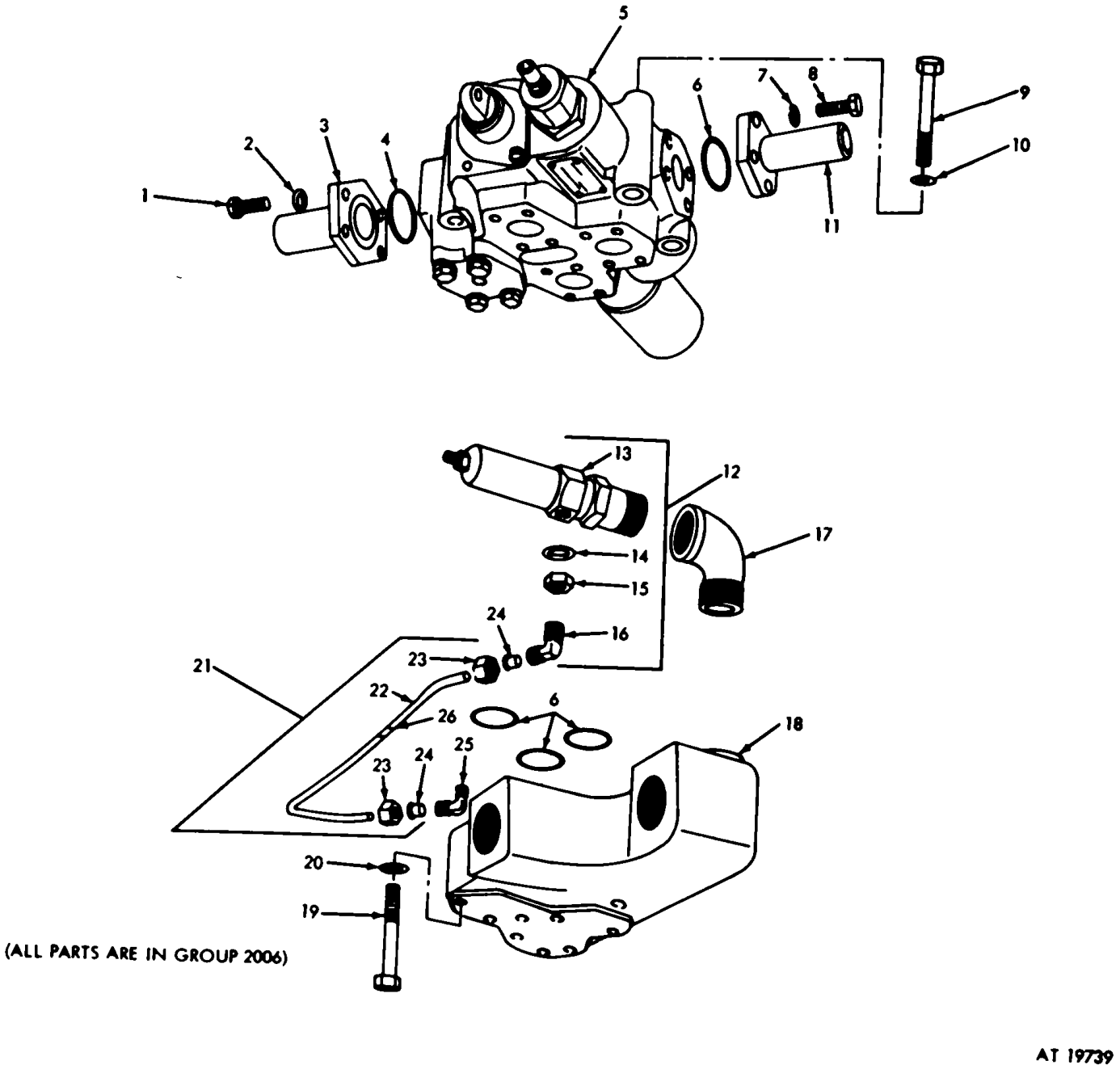

Figure D-27. Directional control valve-exploded view.

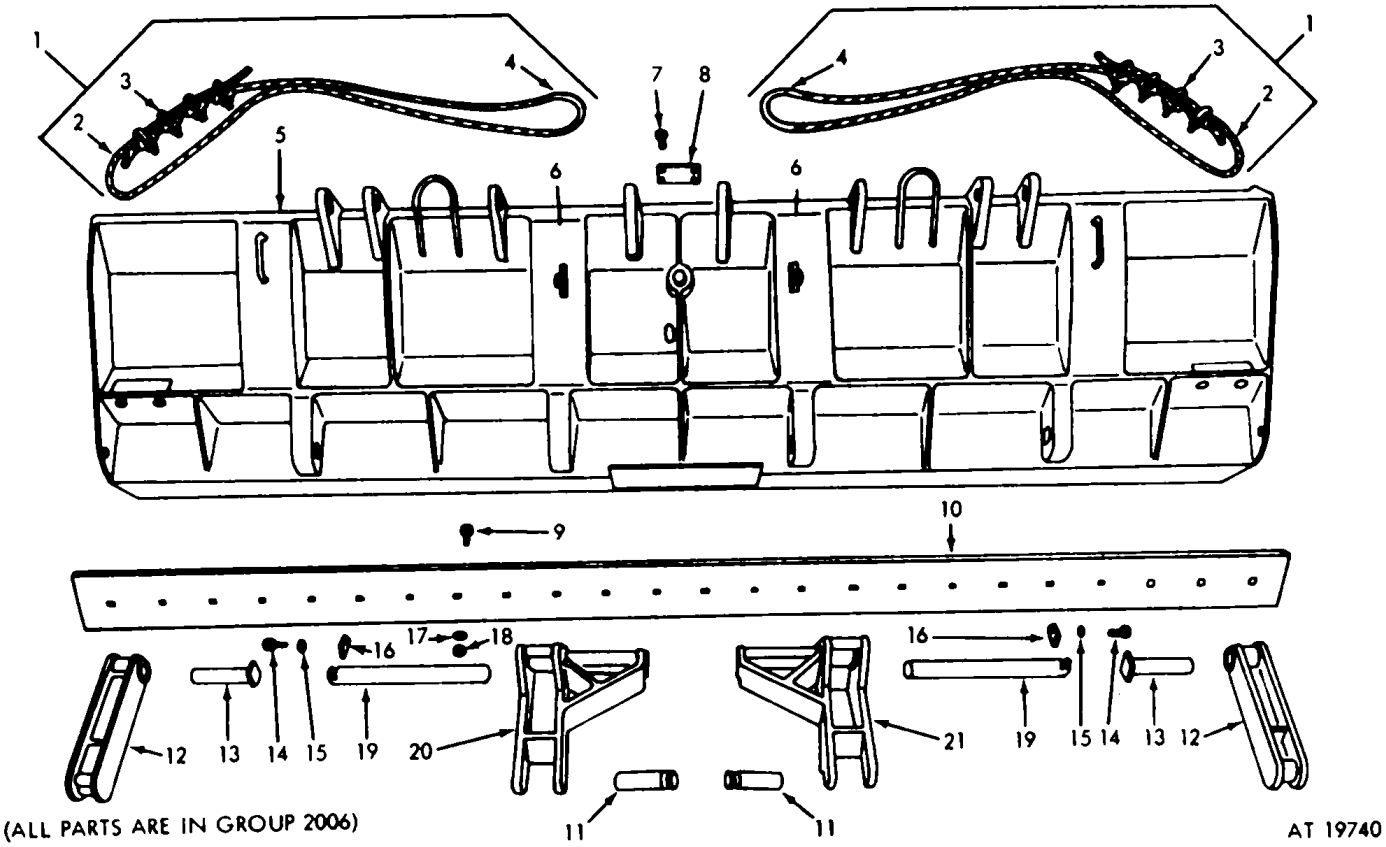

Figure D-28. Moldboard tilt arm, and related items-exploded view.

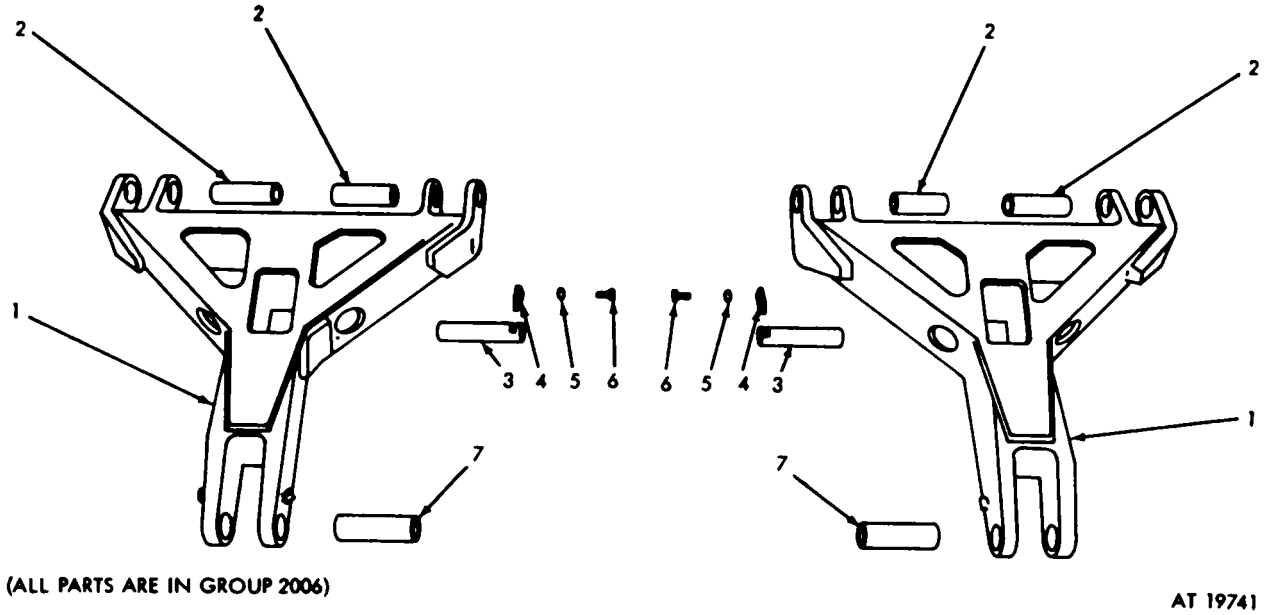

Figure D-29. Push beams and related items-exploded view.

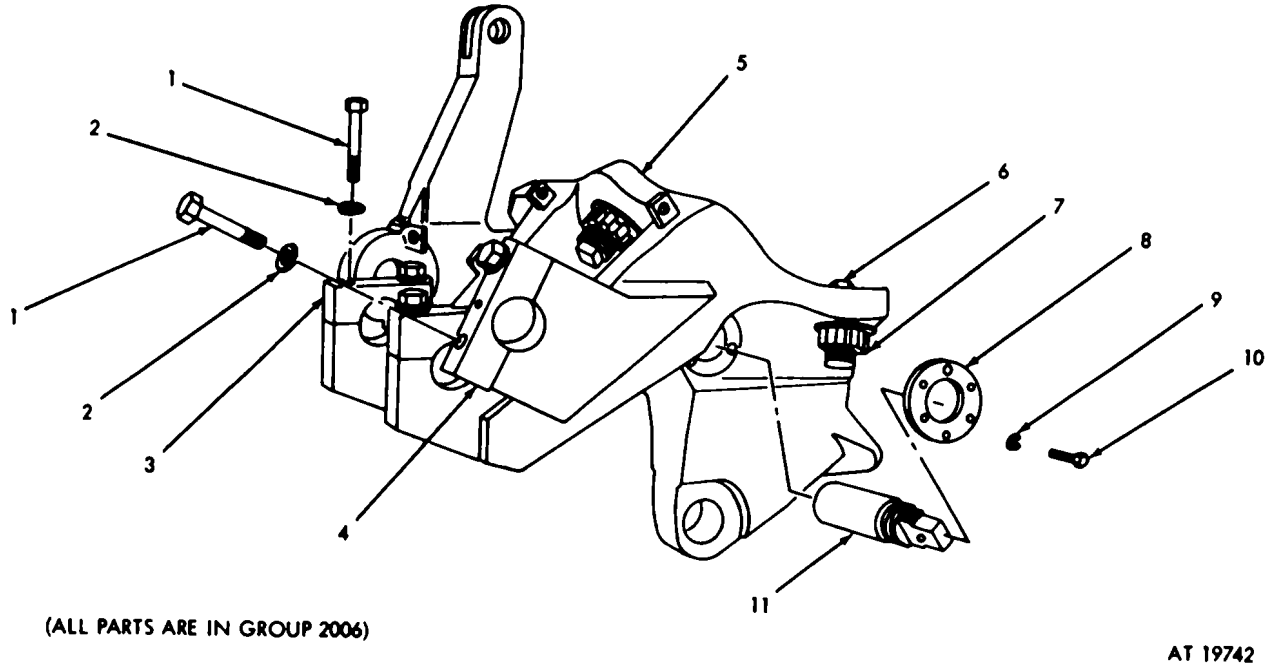

Figure D-30. Mounting brackets-exploded view.

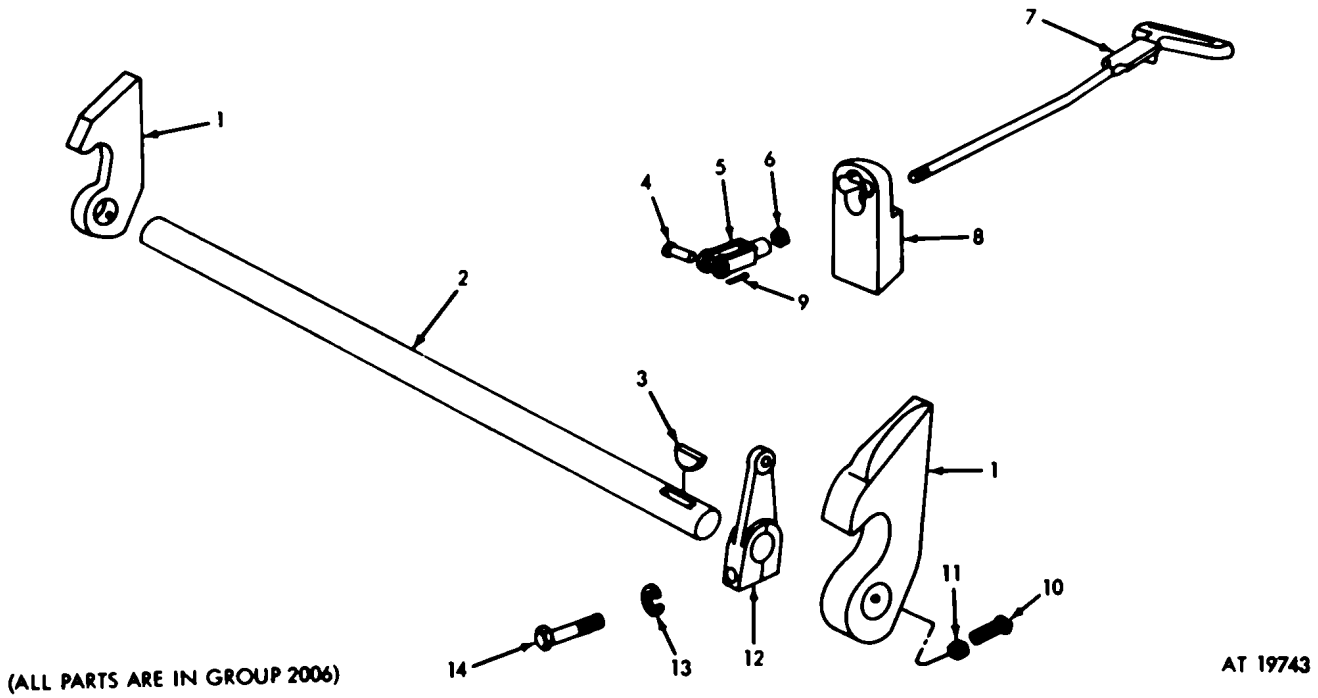

Figure D-31. Moldboard carrying hooks and control handle-exploded view.

SECTION V. INDEXES FEDERAL STOCK NUMBER TO PART NUMBER INDEX

FEDERAL STOCK NUMBER	PART NUMBER	FIGURE NO.	ITEM NO.
1015-798-2997	7982997	D-2	1
1015-798-2997	7982997	D-3	1
1015-798-2997	7982997	D-6	9
2510-512-9202	8709455	D-30	11
2520-167-9182	8668465	D-25	14
2520-178-0465	10940754	D-12	12
2520-178-0466	10940660	D-12	8
2520-653-9212	7383693	D-13	3
2520-653-9213	7699927	D-11	4
2520-653-9215	7383697	D-13	4
2520-653-9220	7699964	D-11	2
2520-700-5921	10883657	D-22	7
2520-726-1614	7261641	D-25	22
2520-726-1645	7261645	D-25	8
2520-220-5560	7705560	D-25	19
2520-902-8483	10940820	D-12	2
2520-903-6668	10940789	D-14	1
2520-907-1003	10940713	D-14	4
2520-907-8971	10940771	D-12	24
2520-907-9002	10940670	D-12	11
2520-907-9004	10940669	D-12	15
2540-119-3900	7358623	D-1	2
2540-707-1242	8395438	D-15	11
2540-770-5174	7705174	D-28	10
2540-770-5186	770516	D-28	12
2590-047-4096	7972333	D-4	24
2590-125-3832	10887470	D-28	5
2590-125-3836	10934326	D-28	6
2590-125-3844	11590939	D-31	2
2590-569-9612	8709783	D-26	15
2590-653-9532	8381771	D-29	1
2590-653-9533	8381773	D-28	20
2590-653-9534	8381774	D-28	21
2590-656-3603	9699903	D-9	2
2590-653-3604	7699945	D-9	8
2590-656-3605	7699946	D-9	9
2590-656-3606	7049998	D-27	5
2590-356-3613	769952	D-26	4
2590-656-3614	7699887	D-26	12
2590-656-3615	7699950	D-26	9
2590-656-3617	7699911	D-26	13
2590-707-1247	10870588	D-15	10
2590-707-8823	8728125	D-13	5
2590-726-1585	7261585	D-25	18
2590-726-1644	7261644	D-25	6
2590-735-6793	7356793	D-27	13
2590-740-3981	8709801	D-31	12
2590-740-3982	8709446	D-30	3
2590-740-3983	8709448	D-30	4
2590-740-3994	8709454	D-30	6
2590-740-3996	8715731	D-30	8
2590-862-2681	8395440	D-15	8
2590-898-6091	8709802	D-31	1
2590-889-6730	11637238	D-28	16
2590-889-6730	11637238	D-29	4
2599-090-8969	10940524-1	D-23	20
2590-970-4970	10940524-2	D-23	19
2920-695-6223	7064704	D-4	14
3020-653-9535	7044246	D-11	3
3110-120-3096	709513	D-13	11
3110-156-4704	814248	D-13	8
3110-156-4712	714249	D-13	21
3110-588-1137	8395428	D-15	4
3120-656-4945	7699675	D-9	20
3120-656-4946	7699874	D-9	22
3120-656-4947	7699876	D-8	10
3120-732-3548	7323548	D-25	12
3805-588-1163	8395432	D-15	12
3805-588-1164	8395433	D-15	2
3830-520-8385	7360940	D-28	1
4030-243-4441	96906-16842-8	D-28	3
4730-221-2137	96906-20913-28	D-12	7
4730-221-2137	96906-20913-28	D-13	25
4730-277-9728	96906-39212-4	D-27	24
4730-278-3853	96906-39202-4	D-27	25
4730-278-4811	7350920	D-23	11
4730-278-6343	502400	D-12	25
4730-278-6343	502400	D-13	24
4730-289-6113	8724192	D-23	12
4730-329-7098	138383	D-15	9
4730-569-9635	8744811	D-23	10
4730-569-9637	8735819	D-23	8
4730-569-9639	8744812	D-23	18
4730-056-9648	8735794	D-23	9'
4730-826-6465	96906-35670-2	D-12	4
4730-826-6465	96906-35670-2	D-13	17
4730-826-6465	96906-35670-2	D-26	1
5305-022-8288	228288	D-4	19
5305-042-6417	96906-90725-113	D-16	4
5305-042-6417	96906-90725-113	D-17	12
5305-042-6417	96906-90725-113	D-22	5
5305-044-6680	96906-35226-30	D-13	1
5305-044-4153	96906-90725-109	D-16	10
5305-050-1076	96906-90725-89	D-22	16
5305-053-8993	96906-90725-112	D-17	2
5305-053-8993	96906-90725-112	D-18	5
5305-068-0500	96906-90725-3	D-26	32
5305-068-0501	96906-90725-5	D-24	2
5303-068-0501	96906-90725-5	D-26	7
5305-071-1770	96906-90725-116	D-16	8
5305-071-1779	96906-90725-126	D-27	9
5305-071-2239	96906-90725-12	D-9	11
5305-119-5219	96906-90725-111	D-17	5
5305-225-3840	96906-90725-7	D-9	3
5305-269-3210	96906-90725-59	D-21	7
5305-269-3211	96906-90725-60	D-19	3

E-51. INDEXES (PECULIAR TO EARLY MODEL BULLDOZER).
FEDERAL STOCK NUMBER TO PART NUMBER INDEX

FEDERAL STOCK NUMBER	PART NUMBER	FIGURE NO.	ITEM NO.
5305-269-3212	96906-90725-61	D-22	45
5305-269-3213	96906-90725-62	D-18	8
5305-269-3213	96906-90725-62	D-22	52
5305-269-3213	96906-90725-62	D-26	2
5305-269-3213	96906-90725-62	D-30	10
5305-269-3214	96906-90725-64	D-21	1
5305-269-3215	96906-90725-65	D-18	7
5305-269-4511	96906-90725-63	D-12	14
5305-269-4511	96906-90725-63	D-26	25
5305-576-0525	96906-35292-8	D-4	3
5305-622-1509	96906-35224-63	D-9	15
5305-655-6276	96906-35304-168	D-25	20
5305-709-8526	96906-90727-92	D-11	9
5305-710-4192	96906-90726-87	D-27	8
5305-710-4202	96906-90726-96	D-27	19
5305-716-8128	96906-90725-117	D-31	14
5305-716-8184	96906-90726-112	D-27	1
5305-719-5238	96906-90727-115	D-11	14
5305-719-5235	96906-90727-114	D-11	18
5305-727-3804	96906-90725-165	D-26	28
5305-727-5677	96906-90726-162	D-29	6
5305-727-5677	96906-90726-162	D-28	14
5305-782-9495	96906-90725-111	D-16	9
5305-782-9495	96906-90725-111	D-22	30
5305-810-8435	96906-51096-115	D-25	16
5305-813-3104	96906-51054-74	D-31	10
5305-889-2872	96906-24649-46	D-28	7
5305-984-6193	96906-35206-245	D-10	1
5305-984-6196	96906-35206-248	D-10	11
5305-984-6209	96906-35206-262	D-10	4
5306-051-4076	96906-90727-34	D-11	10
5306-225-8496	96906-90725-31	D-8	4
5306-225-8499	96906-90725-34	D-13	16
5306-225-9081	96906-90725-36	D-12	26
5306-938-1643	10887246	D-7	3
5307-656-4948	7699852	D-9	14
5307-903-6655	10940661	D-12	10
5310-012-0361	96906-35649-102	D-10	14
5310-012-0384	96906-35338-29	D-22	28
5310-012-0622	96906-35649-82	D-10	10
5310-012-1574	96906-35338-31	D-25	21
5310-012-1637	96906-35337-25	D-4	6
5310-045-3296	96906-35338-43	D-10	5
5310-045-3299	96906-35338-42	D-10	2
5310-045-4007	96906-35338-41	D-13	2
5310-080-6004	96906-27183-14	D-7	5
5310-080-6004	96906-27183-14	D-22	24
5310-087-4652	96906-51922-17	D-18	3
5310-087-4652	96906-51922-17	D-19	2
5310-087-4652	96906-51922-17	D-22	25
5310-087-7493	96906-27183-13	D-8	6
5310-194-1540	96906-15795-210	D-4	4
5310-209-0965	96906-35338-47	D-11	8
5310-209-0965	96906-35338-47	D-22	43
5310-209-0965	96906-35338-47	D-27	7
5310-209-0965	96906-35338-47	D-27	20
5310-384-5272	96906-35338-48	D-16	3
5310-407-9566	96906-35338-45	D-8	5
5310-407-9566	96906-35338-45	D-11	11
5310-407-9566	96906-35338-45	D-12	17
5310-407-9566	96906-35338-45	D-13	15
5310-407-9566	96906-35338-45	D-26	10
5310-543-4568	96906-35690-422	D-4	7
5310-562-0133	8668478	D-25	9
5310-582-5965	96906-35338-44	D-9	4
5310-582-5965	96906-35338-44	D-24	3
5310-582-5965	96906-35338-44	D-26	8
5310-582-5272	96906-35338-48	D-11	15
5310-584-5272	96906-35338-48	D-17	3
5310-584-5272	96906-35338-48	D-18	6
5310-584-5272	96906-35338-48	D-22	6
5310-584-5272	96906-35338-48	D-27	2
5310-584-5272	96906-35338-48	D-27	10
5310-584-5272	96906-35338-48	D-31	13
5310-584-7888	96906-35338-51	D-28	17
5310-584-7889	96906-35338-53	D-30	2
5310-834-8734	96906-35691-33	D-31	11
5310-637-9541	96906-35338-46	D-7	6
5310-637-9541	96906-35338-46	D-9	13
5310-637-9541	96906-35338-46	D-12	13
5310-637-9541	96906-35338-46	D-18	9
5310-637-9541	96906-35338-46	D-19	4
5310-637-9541	96906-35338-46	D-21	2
5310-637-9541	96906-35338-46	D-22	40
5310-637-9541	96906-35338-46	D-26	3
5310-637-9541	96906-35338-46	D-30	9
5310-647-3934	7383581	D-7	7
5310-656-0227	96906-35691-825	D-22	29
5310-728-2038	8715761	D-30	7
5310-732-0558	96906-51968-8	D-12	18
5310-732-0560	96906-51968-14	D-11	13
5310-761-1618	96906-519674	D-26	11
5310-763-8905	96906-51968-20	D-12	21
5310-763-8921	96906-51967-23	D-28	18
5310-797-2040	7972351	D-4	10
5310-800-0695	96906-35335-39	D-28	15
5310-800-0695	96906-35335-39	D-29	5
5310-809-3078	96906-27183-11	D-9	10
5310-809-3079	96906-27183-19	D-16	2
5310-809-3079	96906-27183-19	D-17	11
5310-809-4058	96906-27183-10	D-9	6
5310-809-4061	96906-27183-15	D-21	3
5310-809-4061	96906-27183-15	D-22	41
5310-809-4085	96906-27183-16	D-11	7
5310-809-5998	96906-27183-18	D-11	16
5310-820-6653	96906-35338-50	D-12	20

E-51. INDEXES (PECULIAR TO EARLY MODEL BULLDOZER).
FEDERAL STOCK NUMBER TO PART NUMBER INDEX

FEDERAL STOCK NUMBER	PART NUMBER	FIGURE NO.	ITEM NO.
5310-820-6653	96906-35338-50	D-26	27
5310-823-4803	96906-27183-21	D-26	26
5310-833-8567	8338567	D-5	9
5310-833-8567	8338567	D-6	2
5310-834-8734	96906-35691-37	D-31	6
5310-834-8736	96906-35691-2	D-9	5
5310-834-8736	96906-35691-2	D-9	5
5310-837-7788	8383242	D-27	14
5310-851-2682	96906-37691-17	D-9	12
S310-880-7746	96906-51968-5	D-12	19
5310-975-2075	96906-35691-21	D-8	1
5310-912-4741	96906-35692-2427	D-25	4
5315-842-3044	96906-24665-283	D-7	8
5315-990-2973	96906-20066-120	D-9	1
5315-846-0126	96906-24665-628	D-25	23
5315-839-5822	96906-24665-353	D-31	9
5315-842-3154	96906-35810-36	D-31	4
5315-616-5520	96906-35756-14	D-31	3
5320-291-8428	593347	D-4	12
5330-143-7002	11605388	D-1	3
5330-297-6329	7358626	D-1	4
5330-297-7092	7970024	D-4	5
5330-297-9990	96906-28775-222	D-22	47
5330-297-9990	96906-28775-222	D-27	6
5330-579-7927	96906-28775-225	D-22	49
5330-579-7927	96906-28775-225	D-27	4
5330-582-1560	96906-28775-235	D-13	6
5330-585-8247	96906-28775-232	D-22	13
5330-641-3376	7705568	D-25	17
5330-653-9544	7383695	D-12	3
5330-653-9545	7699891	D-13	13
5330-726-1470	7261470	D-25	7
5330-807-8993	96906-28775-28	D-22	31
5330-834-2912	96906-35769-18	D-12	6
5330-834-2912	96906-35769-18	D-13	19
5330-951-2492	96906-28775442	D-25	10
5340-178-3740	10940666	D-11	5
5340-200-6145	144245	D-31	5
5340-200-7099	586328	D-13	22
5340-200-9528	586272	D-13	20
5340-201-0202	586322	D-14	7
5340-275-6104	586229	D-13	9
5340-375-1448	8395443	D-15	3
5340-442-5845	96906-16633-1050	D-9	18
5340-647-3933	7739925	D-4	20
5340-664-2079	586325	D-14	2
5340-738-2936	8395435	D-15	1
5340-769-8818	7699818	D-11	20
5340-772-2322	7722322	D-4	15
5340-772-2322	7722322	D4	17
5340-772-2343	7722343	D-5	3
5340-840-7819	96906-16625-1256	D-26	14
5340-903-7208	10940663	D-12	5
5340-903-7208	10940663	D-13	18
5925-026-4767	96906-39062-1	D-10	12
5940-057-2929	96906-27148-2	D-5	10
5940-057-2929	96906-27148-2	D-6	1
5930-296-6318	96906-39061-1	D-10	6
5935-333-3088	7723306	D-5	4
5935-333-3088	7723306	D-5	4
5935-399-6676	8338564	D-2	1
5935-399-6676	8338564	D-3	1
5935-399-6676	8338564	D-6	9
5935-485-8954	7716520	D-4	23
5935-485-8955	7716521	D-4	1
5935-572-9180	8338566	D-5	8
5935-572-9180	8338566	D-6	3
5975-588-0387	7358624	D-1	7
5975-697-6991	7527643	D-5	2
5935-615-9985	7982404	D-10	8
5935-771-8192	7723475	D-4	22
5935-772-3474	7723474	D-4	2
5935-789-6085	8724198	D-5	1
5935-833-8561	8338561	D-2	3
5935-833-8561	8338561	D-3	3
5935-833-8561	8338561	D-6	7
5970-833-8562	8338562	D-2	2
5970-833-8562	8338562	D-3	2
5970-833-8562	8338562	D-6	8
6145-772-0853	M13486 / 1-5	D-2	4
6145-772-0853	M13486/ 1-5	D-3	4
6145-772-0853	M13486/ 1-5	D-4	16
6145-772-0853	M13486/ 1-5	D-5	7
6145-772-0853	M13486/ 1-5	D-6	6
6210-299-5564	7358622	D-1	6
6210-699-9457	8376499	D-10	7
6220-179-8176	7672330	D-4	9
6220-647-3935	7383591	D-7	4
6220-709-1836	7972352	D-4	-
6240-155-8707	96906-35231-1829	D-1	5
9505-248-9850	96906-20995-F47	D-25	15
9905-935-3863	96906-39020-28	D-27	26
9905-935-7672	10864355	D-5	6
9905-935-7672	10864355	D-6	5
9905-752-4649	96906-39020-1	D-6	5
9905-752-4649	96906-39020-1	D-6	4

PART NUMBER TO FEDERAL STOCK NUMBER INDEX

PART NUMBER	FEDERAL STOCK NUMBER	FIG. NO.	ITEM NO.	PART NUMBER	FEDERAL STOCK NUMBER	FIG. NO.	ITEM NO.
10863975	-	D-9	7	11637640-1	-	D-29	2
10863976	-	D-9	17	11637640-2	-	D-29	7
10864355	9905-935-7672	D-5	6	11637640-3	-	D-28	11
10864355	9905-935-7672	D-6	5	11637640-4	-	D-28	13
10870588	2590-707-1247	D-15	10	11637640-5	-	D-29	3
10870931	-	D-18	1	11637640-6	-	D-28	19
10873964	-	D-13	14	11640676	-	D-28	9
10883657	2520-700-5921	D-22	7	11645057	-	D-22	33
10883660		D-22	51	11645086	-	D-21	6
10887246	5306-938-1643	D-7	3	11645087	-	D-21	4
10887470	2590-125-3832	D-28	5	11645088	-	D-21	5
10934326	2590-125-3836	D-28	6	11645089	-	D-20	1
10940524-1	2590-907-8969	D-23	20	11645092	-	D-22	10
10940524-2	2590-907-8970	D-23	19	11645093-1	-	D-7	9
10940623	-	D-14	8	11645093-2	-	D-7	9
10940660	2520-178-0466	D-12	8	11645094	-	D-27	15
10940661	5307-903-6655	D-12	10	11645105-1	-	D-7	1
10940662	-	D-12	1	11645105-2	-	D-7	1
10940663	5340-903-7208	D-12	5	11645107	-	D-22	39
10940663	5340-903-7208	D-13	18	11645113	-	D-19	1
10940664	-	D-13	10	11645115	-	D-22	11
10940666	5340-178-3740	D-11	5	11645117	-	D-18	2
10940668	-	D-11	12	11645118	-	D-17	2
10940669	2520-907-9004	D-12	15	11645119	-	D-22	23
10940670	2520-907-9002	D-12	11	11645120-1	-	D-23	1
10940671	-	D-12	22	11645120-2	--	D-23	17
10940672	-	D-12	16	11645121	-	D-22	32
10940673	-	D-12	9	11645122	-	D-22	17
10940698	-	D-11	17	11645123	-	D-22	46
10940713	2520-907-1003	D-14	4	11645139	-	D-22	37
10947118	-	D-14	3	11645141	-	D-18	4
10940754	2520-178-0465	D-12	12	11645142	-	D-22	34
10940771	2520-907-8971	D-12	24	11645145	-	D-22	21
10940789	2520-903-6668	D-14	1	11645146	-	D-17	9
10940820	2520-902-8483	D-12	2	11645160-1	-	D-23	13
10944883	-	D-22	27	11645160-2	-	D-23	7
10944883	-	D-22	27	11645160-3	-	D-23	5
10944884	-	D-22	26	1164160-4	-	D-23	14
10944911	-	D-28	8	11645161	-	D-27	3
10951608	-	D-14	6	11645164	-	D-22	48
10951609	-	D-10	13	11645165	-	D-26	5
10951610	-	D-10	9	11645166	-	D-26	16
10951611	-	D-10	16	11645170	-	D-27	11
10951612	-	D-10	15	11645173	-	D-22	3
10951689	-	D-12	23	11645174	-	D-22	2
10951754	-	D-25	3	11645176-1	-	D-22	9
10951755-1	-	D-25	I	11645176-2	-	D-22	8
10951755-2	-	D-25	1	11645180	-	D-27	21
11590939	2590-125-3844	D-31	2	11645180-1	-	D-27	22
11605388	5330-143-7002	D-1	3	11645191	-	D-17	4
11637238	2590-889-6730	D-28	16	11645193	-	D-23	3
11637238	2590-889-6730	D-29	4	11645194	-	D-23	16
11637369	-	D-10	3	11645203	-	D-11	19

PART NUMBER TO FEDERAL STOCK NUMBER INDEX

PART NUMBER	FEDERAL STOCK NUMBER	FIG. NO.	ITEM NO.	PART NUMBER	FEDERAL STOCK NUMBER	FIG. NO.	ITEM NO.
11645211	-	D-22	42	7383693	2520-653-9212	D-13	3
11645212	-	D-17	6	7383695	5330-653-9544	D-12	3
11645213	-	D-22	50	7383697	2520-653-9215	D-13	4
11645212	-	D-22	53	7383723	-	D-13	12
11645220	-	D-17	1	7383724	-	D-16	11
11645221-1	-	D-17	7	7383743	-	D-16	12
11645221-2	-	D-17	8	7383745	-	D-16	,6
11645233	-	D-26	6	7383746	-	D-16	1
11645641	-	D-1	6	7383747	-	D-16	1
138383	4730-329-7098	D-15	9	7527643	5975-697-6991	D-5	2
144245	5340-200-6145	D-31	5	7699342	-	D-8	8
190136	-	D-8	2	7699818	5340-769-8818	D-11	20
228288	5305-022-8288	D-14	19	7699839	-	D-8	3
586229	5340-275-6104	D-13	9	7699840	-	D-8	7
586272	5340-200-9528	D-13	20	7699852	5307-656-4948	D-9	14
586322	5340-201-0202	D-14	7	7699874	3120-656-4946	D-9	22
586325	5240-664-2079	D-13	7	7699875	3120-656-4945	D-9	20
586325	5340-664-2079	D-14	2	7699876	3120-656-4947	D-8	10
586328	5340-200-7099	D-13	22	7699887	2590-656-3614	D-26	12
593377	5320-291-8428	D-4	12	7699891	5330-653-9545	D-13	13
502400	4730-278-6343	D-12	25	7699894	-	D-11	1
502400	4730-278-6343	D-13	24	7699845	-	D-8	11
709513	3110-120-3096	D-13	11	7699903	2590-656-3603	D-9	2
714248	3110-156-4704	D-13	8	7699910	-	D-26	22
714249	3110-156-4712	D-13	21	7699911	2590-656-3617	D-26	13
7044043	-	D-27	17	7699918	-	D-26	17
7044246	3020-653-9535	D-11	3	7699927	2520-653-9213	D-11	4
7049998	2590-656-3606	D-27	5	7699931	-	D-26	23
7064704	2920-695-6223	D-4	14	7699936	-	D-8	9
7261470	5330-726-1470	D-25	7	7699944	-	D-9	21
7261585	2590-726-1585	D-25	18	7699945	2590-456-3604	D-9	8
7261641	2520-726-1641	D-25	22	7699946	2590-656-3605	D-9	9
7261644	2590-726-1644	D-25	6	7699949	-	D-26	31
7261645	2520-726-1645	D-25	8	7699950	2590-656-3615	D-26	9
7261646	-	D-25	5	7699952	2590-656-3613	D-26	4
7323548	3120-732-3548	D-25	12	7699955	-	D-26	18
7323554	-	D-25	2	7699956	-	D-26	30
7340000	-	D-22	44	7699959	-	D-9	19
7340001	-	D-22	15	7699964	2520-653-9220	D-11	2
7350920	4730-278-4811	D-23	11	7699970	-	D-27	18
7356793	2590-735-6793	D-27	13	7699973	-	D-26	21
7356794	-	D-27	12	7699977	-	D-26	29
7358622	6210-299-5564	D-1	6	7700049	-	D-24	1
7358623	2540-119-3900	D-1	2	7716520	5935-485-8954	D-4	23
7358624	5975-588-0387	D-1	7	7716521	5935-485-8955	D-4	1
7358625	-	D-1	1	7722322	5340-772-2322	D-4	IS
7358626	5330-297-6329	D-1	4	7722322	5340-772-2322	D-4	17
7360940	3830-520-8385	D-28	1	7723474	5935-772-3474	D-4	2
7383581	5310-647-3934	D-7	7	7723475	5935-771-8192	D-4	22
7383590	-	D-4	11	7739925	5340-647-3933	D-4	20
7383591	6220-647-3935	D-7	4	7705174	2547-770-5174	D-28	10
7383593	-	D-4	8	7705186	2540-770-5186	D-28	12
7383692	-	D-13	23	7705560	2520-770-5560	D-25	19

PART NUMBER TO FEDERAL STOCK NUMBER INDEX

PART NUMBER	FEDERAL STOCK NUMBER	FIG. NO.	ITEM NO.	PART NUMBER	FEDERAL STOCK NUMBER	FIG. NO.	ITEM NO.
7705568	5330-641-3376	D-25	17	8709760	-	D-26	20
7722343	5340-772-2343	D-5	3	8709783	2590-569-9612	D-26	15
7723306	5935-333-3088	D-5	4	8709801	2590-740-3981	D-31	12
7953557	-	D-16	S	8709802	2590-498-6091	D-31	1
7970024	5330-297-7092	D-4	5	8715731	2590-740-3996	D-30	8
7972330	6220-179-8176	D-4	9	8715731	2590-740-3996	D-30	8
7972333	2590-047-4096	D-4	24	8715761	5310-728-2038	D-30	7
7972351	5310-797-2040	D-4	10	8721286	-	D-30	5
7972353	6220-709-1836	D-4	-	8721287	-	D-30	5
7972355	-	D-4	21	8'724192	4730-289-6113	D-23	12
7982404	5935-615-9985	D-10	8	8724198	5935-789-6085	D-5	1
7982997	1015-798-2997	D-2	1	8724763		D-4	18
7982997	1015-798-2997	D-3	1	8728125	2590-707-8823	D-13	5
7982997	1015-798-2997	D-6	9	8735794	4730-569-9648	D-23	9
8338561	5935-833-8561	D-2	3	8735819	4730-569-9637	D-23	8
8338561	5935-833-8561	D-3	3	8744719	-	D-16	7
8338561	5935-833-4561	D-6	7	8744720	-	D-17	10
8338562	5970-833-8562	D-2	2	8744760	-	D-23	15
8338562	5970-833-8562	D-3	2	8744811	4730-569-9635	D-23	10
8338562	5970-833-8562	D-6	8	8744812	4730-569-9635	D-23	18
8338564	5935-399-6676	D-2	1	8744840	-	D-16	7
8338564	5935-399-6676	D-3	1	8744885	-	D-31	7
8338564	5935-399-6676	D-16	9	8744886	-	D-31	8
8338566	5935-572-9180	D-5	8	8744886	-	D-31	8
8338566	5935-572-9180	D-6	3	96906-15795-210	5310-194-1540	D-4	4
8338567	5310-833-8567	D-5	9	96906-16625-1256	5340-840-7819	D-26	14
8338567	5310-833-8567	D-6	2	96906-16633-1050	5340-442-5845	D-9	18
8376499	6210-699-9457	D-10	7	96906-16842-8	4030-242-4441	D-28	3
8381659	-	D-26	19	96906-20066-120	5315-990-2973	D-9	1
8381771	2590-653-9532	D-29	1	96906-20066-255	-	D-14	5
8381773	2590-653-9533	D-28	20	96906-20913-2S	4730-221-2137	D-1	27
8381774	2590-653-9534	D-28	21	96906-20913-2S	4730-221-2137	D-13	25
8383242	5310-837-7788	D-27	14	96906-20995-F47	9505-248-9850	D-25	15
8383372	-	D-28	2	96906-21339-6	-	D-26	24
8383374	-	D-28	4	96906-24649-46	5303-889-2872	D-28	7
8395428	3110-588-1137	D-15	4	96906-24665-283	5313-842-3044	D-7	8
8395432	3805-588-1163	D-15	12	96906-24665-353	5315-839-5822	D-31	9
8395433	3805-588-1164	D-15	2	96906-24665-628	5315-846-0126	D-25	23
8395435	5340-738-2936	D-15	1	96906-27183-2	5940-057-2929	D-5	10
8395436	-	D-15	5	96906-27183-2	5940-057-2929	D-6	1
8395437	-	D-15	6	96906-27183-10	5310-809-4058	D-9	6
8395438	2540-707-1242	D-15	11	96906-27183-11	5310-409-3078	D-9	10
8495439	-	D-15	7	96906-27183-13	5310-087-7493	D-8	6
8395440	2590-862-2681	D-15	8	96906-27183-14	5310-080-6004	D-7	5
8395443	5340-375-1448	D-15	3	96906-27183-14	5310-080-6004	D-22	24
8668465	2520-167-9182	D-25	14	96906-27183-15	5310-809-4061	D-21	3
8668466	-	D-25	13	96906-27183-15	5310-809-4061	D-22	41
8668467	-	D-25	11	96906-27183-16	5310-809-4085	D-11	7
8668478	5310-562-0133	D-25	9	96906-27183-18	5310-809-5998	D-11	16
8709446	2590-740-3982	D-30	3	96906-27183-19	5310-809-3079	D-16	2
8709448	2590-740-3983	D-30	4	96906-27183-19	5310-809-3079	D-17	11
8709454	2590-740-3994	D-30	6	96906-2718-21	5310-823-8803	D-26	26
8709455	2510-512-9202	D-30	11	96906-28775-222	5330-297-9990	D-22	47

PART NUMBER TO FEDERAL STOCK NUMBER INDEX

PART NUMBER	FEDERAL STOCK NUMBER	FIG. NO.	ITEM NO.	PART NUMBER	FEDERAL STOCK NUMBER	FIG. NO.	ITEM NO.
96906-28775-222	5330-297-9990	D-27	6	96906-35338-48	5310-584-5272	D-31	13
96900-28775-225	5330-579-7927	D-22	49	96906-35338-50	5310-820-6653	D-12	20
96906-28775-225	5330-579-7927	D-27	4	96906-35338-50	5310-820-6653	D-26	27
96906-28775-228	5330-807-8993	D-22	31	90606-35338-51	5310-584-7888	D-28	17
96069-28775-232	5330-585-8247	D-22	13	9606-35338-53	5310-584-7889	D-30	2
96906-28775-235	5330-582-1560	D-13	6	96906-35649-82	5310-012-0622	D-10	10
96906-28775-442	5330-951-2492	D-25	10	96906-35649-102	5310-012-0361	D-10	14
96906-35204-238	-	D-30	1	96906-35670-2	4730-826-6465	D-12	4
96906-35206-245	5305-984-6193	D-10	1	96906-35670-2	4730-826-6465	D-13	17
96906-35206-248	5305-984-6196	D-10	11	96906-35670-2	4730-826-6465	D-26	1
96906-35206-262	5305-984-6209	D-10	4	96906-35690-422	5310-543-4568	D-4	7
96906-39207-004	-	D-27	16	96906-35691-2	5310-834-8736	D-9	5
96906-35224-63	5305-622-1509	D-9	15	96906-35691-21	5310-975-2075	D-8	1
96906-35226-30	5305-043-6680	D-13	1	96906-35691-33	5310-834-8732	D-31	11
96906-35231-1829	6240-155-8707	D-1	5	96906-35691-37	5310-834-8734	D-31	6
96906-35292-8	5305-576-0525	D-4	3	96906-35691-825	5310-656-0227	D-22	29
96906-35304-168	5305-655-6276	D-25	20	96906-35692-2427	5310-912-4741	D-25	4
96906-35335-39	5310-800-0695	D-28	15	96906-35756-14	5315-616-5520	D-31	3
96906-35335-39	5310-800-0695	D-29	5	96906-35769-18	5330-834-2912	D-12	6
96906-35337-25	5310-012-1637	D-4	6	96906-35769-18	5330-834-2912	D-13	19
96906-35338-29	5310-012-0384	D-22	28	96906-35810-36	5315-842-3154	D-31	4
96906-35338-31	5310-012-1574	D-25	21	96906-39020-1	-	D4	13
96906-35338-41	5310-045-4007	D-13	2	96906-39020-1	9905-752-4649	D-5	5
96906-35338-42	5310-045-3299	D-10	2	96906-39020-1	9905-752-4649	D-6	4
96906-35338-43	5310-045-3296	-	-	96906-39020-28	9905-935-3863	D-27	26
96906-35338-44	5310--582-5965	D-9	4	96906-39061-1	5930-296-6318	D-10	6
96906-35338-44	5310-582-5965	D-24	3	96906-39062-1	5925-026-4767	D-10	12
96906-35338-44	5310-582-5965	D-26	8	96906-39202-4	4730-278-3853	D-27	25
96906-35338-45	5310-407-9566	D-8	5	96906-39210-4	-	D-27	23
96906-35338-45	5310-407-9566	D-11	11	96906-39212-4	4730-277-9728	D-27	24
96906-35338-45	5310-407-9566	D-12	17	96906-51-54-74	5305-813-3104	D-31	10
96906-35338-45	5310 407-9566	D-13	15	96906-51096-115	5305-810-8435	D-25	16
96906-35358-45	5310-407-9566	D-26	10	96906-51816-11	-	D-23	2
96906-35448-46	5310-637-9541	D-7	6	96906-51819-19	-	D-23	4
96906-35338-46	5310-637-9541	D-9	13	96906-51819-20	-	D-22	12
96906-35338-46	5310-637-9541	D 12	13	96906-51819-21	-	D-22	4
96906-35338-46	5310-637-9541	D-18	9	96906-51820-11	-	D-22	14
96906-35338-46	5310-637-9541	D-19	4	96906-51820-12	-	D-22	1
96906-35338-46	5310 637-9541	D-21	2	96906-51820-28	-	D-23	6
96906-35338-46	5310-637-9541	D 22	40	96906-51820-31	-	D-22	18
96906-35338-46	5310-637-9541	D-26	3	96906-51820-31	-	D-22	22
96906-35338-46	5310-637-9541	D-30	9	96906-51820-32	-	D-22	35
96906-35338-47	5310-209-0965	D-11	8	96906-51823-11	-	D-22	19
96906-35338-47	5310-209-0965	D-22	43	96906-51823-12	-	D-22	36
96906 35338-47	5310 209-0965	D-27	7	96906-51825-11	-	D-22	20
96906-35338-47	5310-209-0965	D-27	20	96906-51825-12	-	D-22	38
96906-35338-48	5310-584-5272	D-11	15	96906-51922-17	5310-087-4652	D-18	3
96906-35338-48	5310-584-5272	D-16	3	96906-51922-17	5310-087-4652	D-19	2
96906-35338-48	5310-584-5272	D-17	3	96906-51922-17	5310-087-4652	D-22	25
96906-35338-48	5310-584-5272	D-18	6	96906-51967-4	5310-761-1681	D-26	11
96906-35338-48	5310-584-5272	D-22	6	96906-51967-23	5310-763-8921	D-28	18
96906-35338-48	5310-584-5272	D-27	2	96906-51968-5	5310-880-7746	D-12	19
96906-35338-48	5310-584-5272	D-27	10	96906-5-968-8	5310-732-0558	D-12	18

PART NUMBER TO FEDERAL STOCK NUMBER INDEX

PART NUMBER	FEDERAL STOCK NUMBER	FIG. NO.	ITEM NO.
96906-51968-14	5310-732-0560	D-11	13
96906-51968-20	5310-763-8905	D-12	21
96906-90725-3	5305-068-0500	D-26	32
96906-90725-5	5305-068-0501	D-24	2
96906-90725-5	5305-068-0501	D-26	7
96906-90725-7	5305-225-3840	D-9	3
96906-90725-12	5305-071-2239	D-9	11
96906-90725-31	5306-225-8496	D-8	4
96906-90725-34	5306-225-4499	D-13	16
96906-90725-36	5306-225-9081	D-12	26
96906-90725-59	5305-269-3210	D-21	7
96906-90725-60	5305-269-3211	D-19	3
96906-90725-61	5305-269-3212	D-22	45
96906-90725-62	5305-269-3213	D-18	8
96906-90725-62	5305-269-3213	D-22	52
96906-90725-62	5305-269-3213	D-26	2
96906-90725-62	5305-269-3213	D-30	10
96906-90725-63	5305-269-4511	D-12	14
96906-90725-63	5305-269-4511	D-26	25
96906-90725-64	5305-269-3214	D-21	1
96906-90725-65	5305-269-3215	D-18	7
96906-90725-89	5305-050-1076	D-22	16
96906-90725-109	5305-044-4153	D-16	10
96906-90725-111	5305-782-9495	D-16	9
96906-90725-111	5305-782-9495	D-22	30
96906-90725-112	5305-053-8993	D-17	2
96906-90725-112	5305-053-8993	D-13	5
96906-90725-113	5305-042-6417	D-16	4
96906-90725-113	5305-042-6417	D-17	12
96906-90725-113	5305-042-6417	D-22	5
96906-90725-116	5305-071-1770	D-16	8
96906-90725-117	5305-716-8128	D-31	14
96906-90725-126	5305-071-1779	D-27	9
96906-90725-165	5305-727-3804	D-26	28
96906-90726-87	5305-710-4192	D-27	8
96906-90726-96	5305-710-42-2	D-27	19
96906-90726-112	5305-716-8184	D-27	1
96906-90726-162	5305-727-5677	D-29	6
96906-90726-162	5305-727-5677	D-28	14
96906-90727-34	5306-051-4076	D-11	10
96906-90727-92	5305-709-8526	D-11	9
96906-90727-111	5305-119-5219	D-17	5
96906-90727-114	5305-719-5235	D-11	18
96906-90727-115	5305-719-5238	D-11	14
M13486/ 1-5	6145-772-0853	D-2	4
M13486/ 1-5	6145-772-0853	D-3	4
M13486/ 1-5	6145-772-0853	D-4	16
M13486/ 1-5	6145-772-0853	D-5	7
M13486/ 1-5	6145-772-0853	D-6	6

Section I. GENERAL

E-1. Scope

E-2. This appendix contains instructions for operation, lubrication, and maintenance including repair parts list of peculiar components for the Tank, Mounting, Earth Moving Bulldozer Early Model, serial numbers 1 through 59. This appendix must be used in conjunction with basic portion of this manual for common components coverage, since only peculiar procedures are included. All references in this appendix shall be construed to mean early model M8A3 bulldozers, serial numbers 1 through 59.

Section II. DESCRIPTION AND DATA

E-3. General

E-4. This section provides a brief description of the peculiar components for this group of M8A3 bulldozers. The information contained in this section is arranged to cover description of bulldozer components beneficial to the crew and maintenance personnel.

E-5. The primary differences between the late model M8A3 bulldozers and this group of early model M8A3 bulldozers are: model number; altered location of individual components on or within the vehicle; improved hydraulic lines, tubes and fittings; electro-magnetic clutch.

Section III. CONTROLS

E-6. General

E-7. This section contains information covering the location and function of peculiar controls provided for the operation of the early model M8A3 bulldozer when mounted on the M48A3 tank.

E-8. The majority of the controls in the early model M8A3 bulldozer are identical in appearance and operation to those in the late M8A3 bulldozer tank. The following text covers only those controls whose operation is different from the corresponding items in the M8A3 bulldozer. For operation of M8A3 controls not covered here, refer to paragraphs 2-9 through 2-13.

E-9. Clutch Control

E-10. The hydraulic oil pump clutch is controlled by a handle located in the crew compartment on the left side of the bulkhead (fig. E-1). A flexible control cable extends from the bulkhead through the engine compartment to a yoke attached to the clutch housing. The detents in the clutch control handle housing secures the clutch in the engaged or disengaged position. Push the handle to engage clutch and pull to disengage.

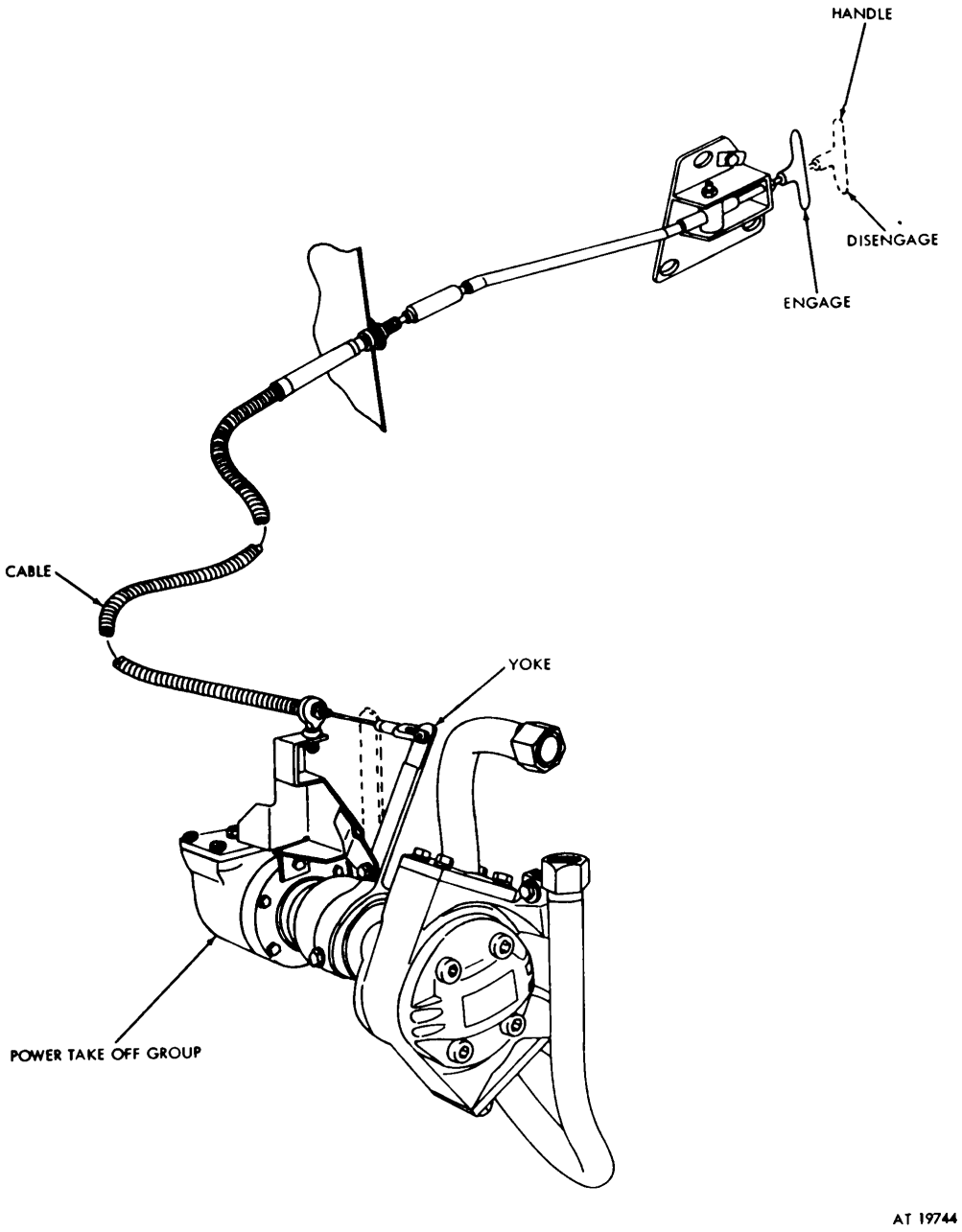

Figure E-1. Clutch control assembly.

Section IV. OPERATION

E-11. General

E-12. This section contains instructions necessary to operate the early model M8A3 bulldozer.

E-13. Bulldozer Operation.

E-14. The majority of the operating procedures in the early model M8A3 bulldozer tank are identical to those in the late M8A3 bulldozer tank. The following text covers only those operating procedures that are different from the corresponding procedures in the late M8A3 bulldozer. For common operating procedures not covered here, refer to paragraph 2-14 through 2-19.

E-15. Bulldozer Operation.

E-16. Disengage the carrying hooks, start the vehicle engine and engage the hydraulic oil pump clutch (fig. E-1). Move the operating handle to the " R" (raise) position (fig. 2-2) to fully elevate the moldboard, keeping the moldboard at the highest position, move the carrying hooks control handle to the disengaged position (fig. E-2).

Section V. ORGANIZATIONAL MAINTENANCE INSTRUCTIONS

E-17. General

E-18. This section contains information for organizational maintenance peculiar to the early model M8A3 bulldozer. For performance of other organizational maintenance operations not covered in this section refer to Chapter 3.

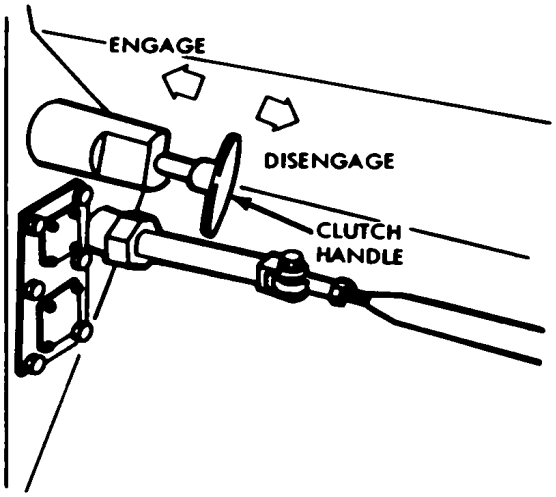

1 WITH THE TANK ENGINE IDLING, PUSH CLUTCH HANDLE TO ENGAGE POSITION.

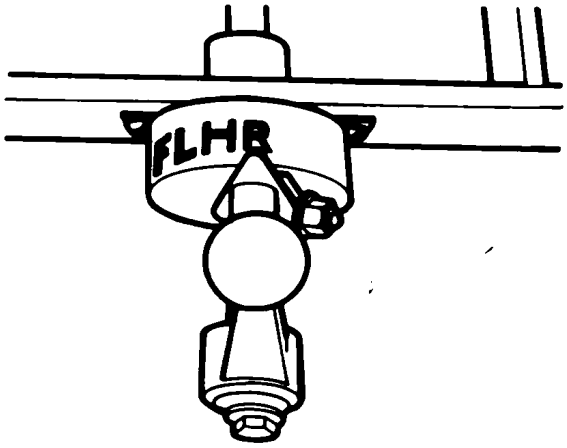

2 MOVE CONTROL HANDLE TO RAISE "R" POSITION.

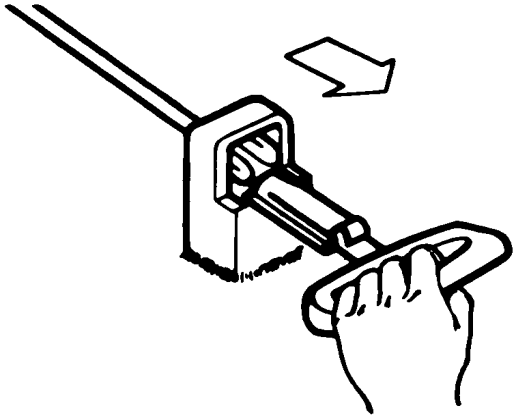

3 PULL CARRYING HOOK HANDLE TO DISENGAGE HOOKS.

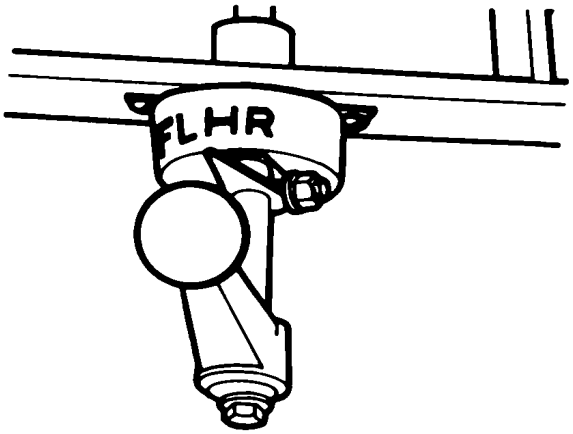

4 MOVE CONTROL HANDLE TO LOWER "L" POSITION AND LOWER MOLDBOARD TO FULL LIMIT OF TRAVEL.

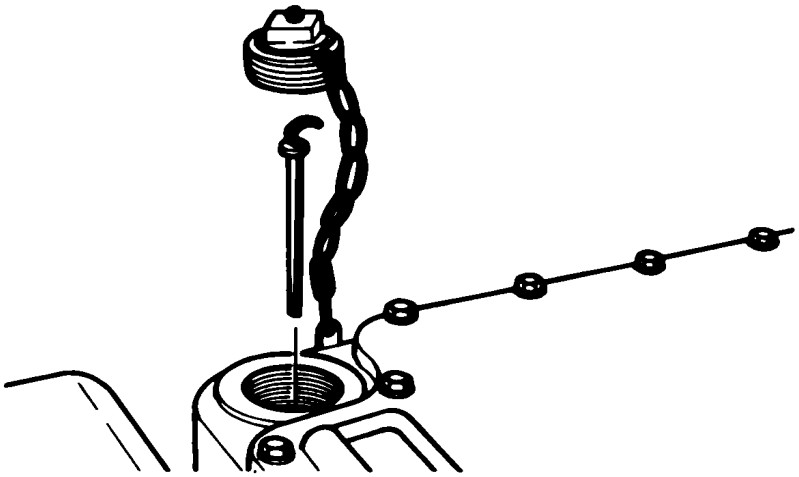

5 RAISE AND LOWER MOLDBOARD SEVERAL TIMES BEFORE CHECKING THE OIL LEVEL IN RESERVOIR. REPLENISH AS NECESSARY.

AT 19745

Figure E-2. Preliminary operating procedures.

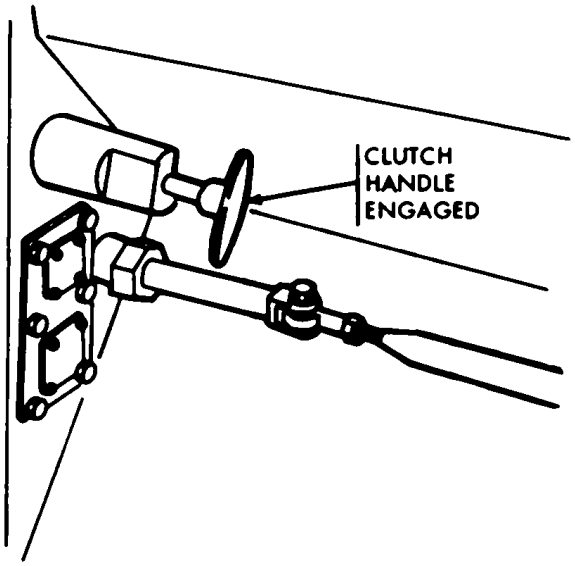

1 WITH TANK ENGINE IDLING, PUSH CLUTCH HANDL TO ENGAGED POSITION.

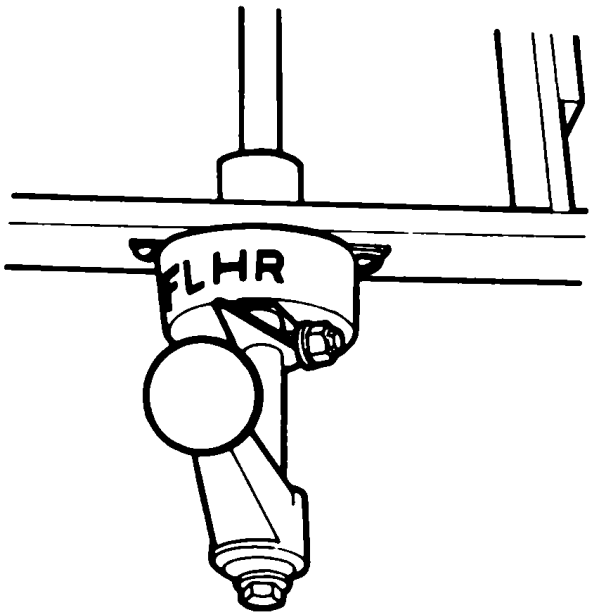

2 WITH TANK MOVING IN LOW GEAR, MOVE THE MOLDBOARD CONTROL HANDLE TO "L" POSITION.

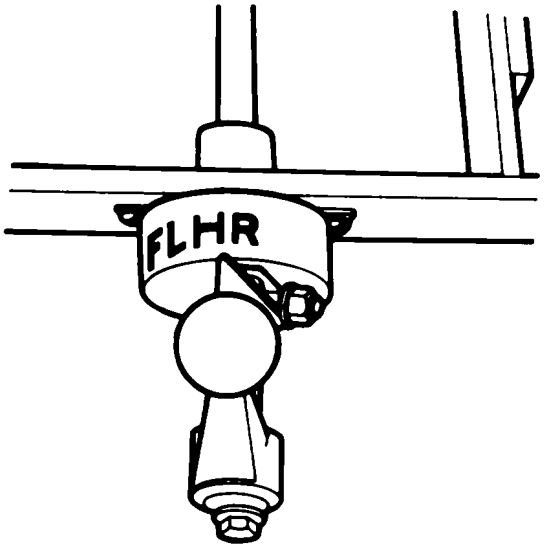

3 WHEN THE MOLDBOARD REACHES THE DESIRED POSITION, RELEASE THE CONTROL HANDLE, IT WILL AUTOMATICALLY RETURN TO HOLD 'H" POSITION.

<u>NOTE</u>: KEEP THE TANK AT A STEADY SPEED WHEN BULLDOZING, RAISING, OR LOWERING THE MOLDBOARD, AS REQUIRED TO COMPENSATE FOR UNEVEN GROUND. ALWAYS OPERATE TANK IN LOW GEAR.

CAUTION: <u>DO NOT USE BULLDOZER AS A RAM. THE MOLDBOARD MUST BE USED IN A PUSHING TECHNIQUE RATHER THAN A RAMMING ACTION. WHFN THE MOLDBOARD BECOMES LOADED AND IT IS DESIRED TO TURN THE TANK, LIFT MOLDBOARD SLIGHTLY. DO NOT LOWER THE MOLDBOARD TO THE EXTENT THAT IT WILL STALL THE TANK ENGINE. TAKE ONLY SUCH A CUT AS CAN BE MOVED WITHOUT SLOWING DOWN THE ENGINE.</u>

<u>WHEN BULLDOZING MOIST EARTH OR STICKY MATERIAL, KEEP MOLDBOARD CLEAN BY KEEPING IT AT BULLDOZING LEVEL DURING THE LAST FEW FEET OF FORWARD TRAVEL, THEN SHIFT INTO REVERSE AND BACK UP SEVERAL FEET BEFORE RAISING MOLDBOARD.</u>

AT 19746

Figure E-3. Operating bulldozer in hold position.

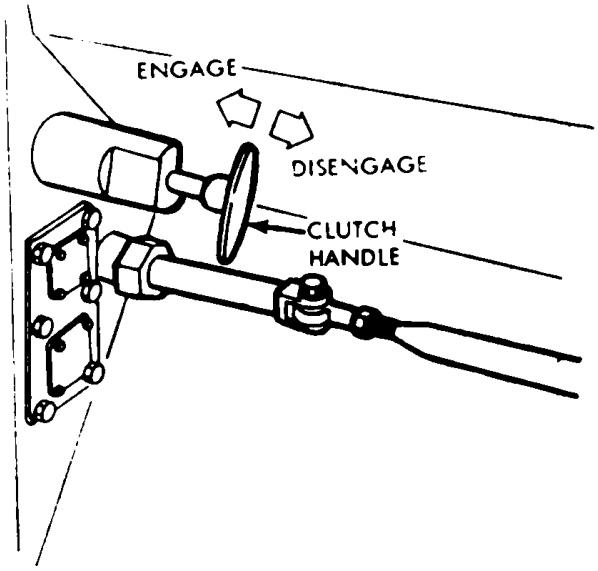

1 WITH THE ENGINE RUNNING, PUSH CLUTCH HANDLE TO ENGAGE POSITION.

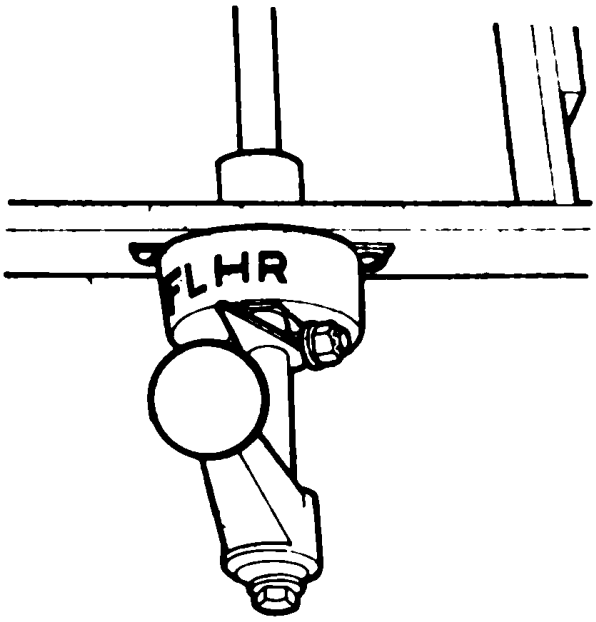

2 HOLD MOLDBOARD CONTROL HANDLE IN "L" POSITION.

<u>NOTE</u>: WHEN THE MOLDBOARD CONTROL HANDLE IS IN FHE FLOAT -F" POSITION, OIL PRESSURE HAS BEEN DIVERTED FROM THE CYLINDERS. THE RESULT IS THAT THE MOLDBOARD CAN RIDE ON THE GROUND WITH ONLY ITS WEIGHT AS DOWNWARD PRESSURE.

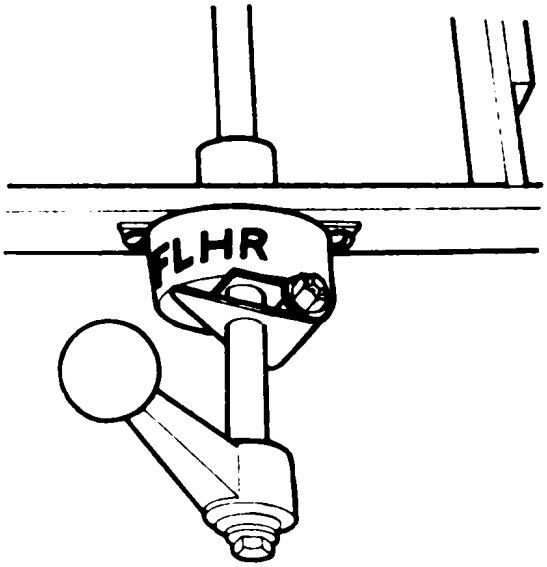

3 WHEN MOLDBOARD TOUCHES GROUND, MOVE CONTROL HANDLE TO "F" POSITION.

AT 19747

Figure E-4. Operating bulldozer in float postion.

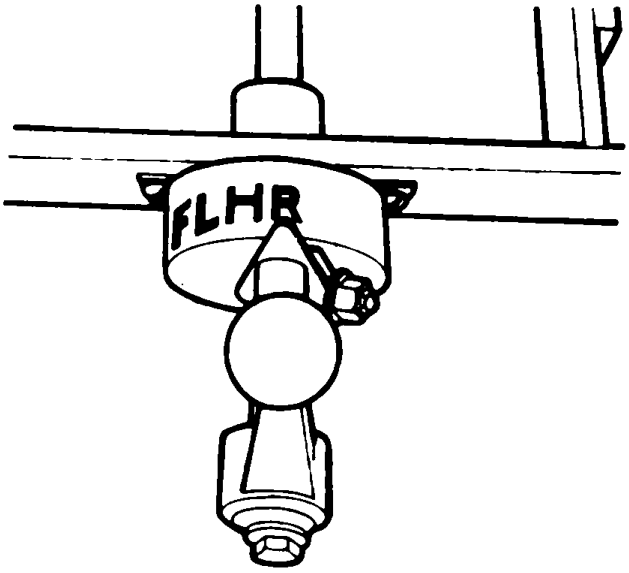

1 MOVE BULLDOZER CONTROL HANDLE TO " R" POSITION.

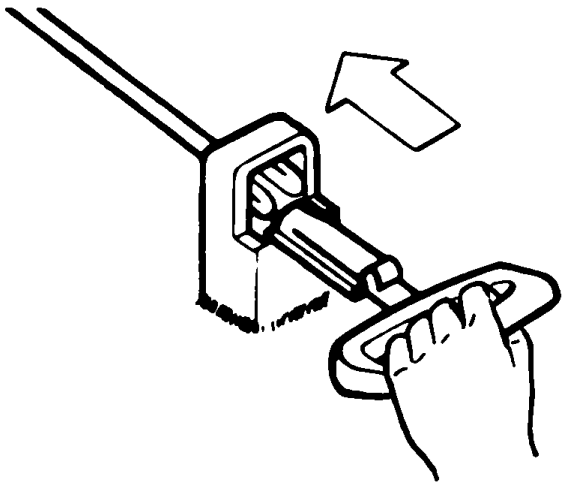

2 PUSH HANDLE TO ENGAGE CARRYING HOOKS.

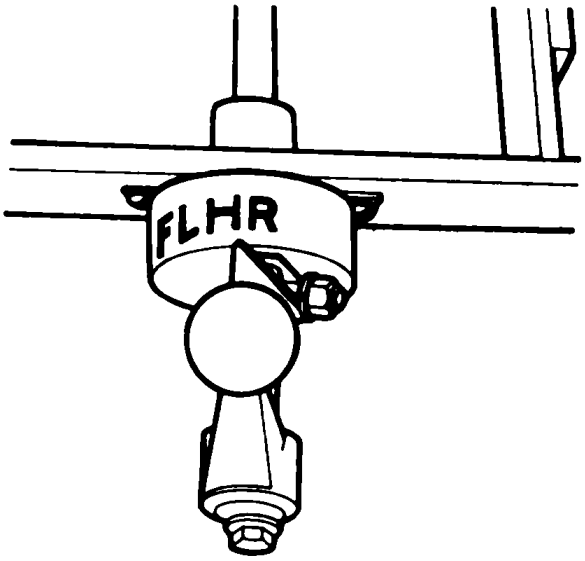

3 WHEN CARRYING HOOKS ARE ENGAGED,.CONTROL HANDLE WILL AUTOMATICALLY RETURN TO "H" POSITION.

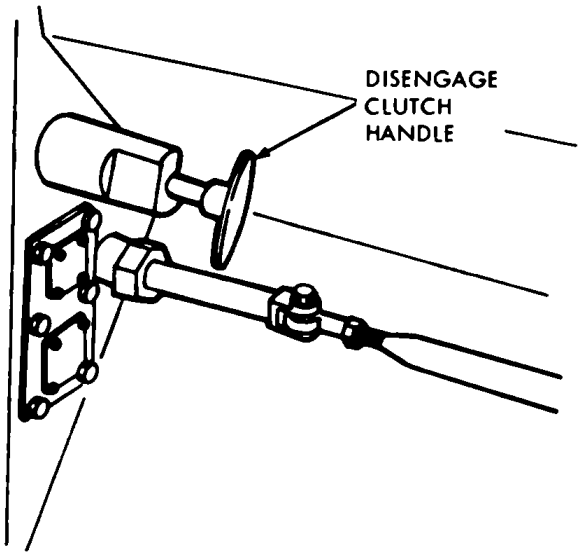

4 PULL CLUTCH HANDLE TO DISENGAGE POSITION

AT 19748

Figure E-5. Removing bulldozer from operation.

E-19. Tools and Equipment

E-20. Special. Special tools and equipment designed for organizational maintenance, repair, and general use peculiar to this material are listed in table E-1 and illustrated in figure E-6. Table E-1 also contains references to paragraphs in this appendix which describe the use of the tool. Table E-1 is not to be used for requisitioning replacements. Special tools for organizational maintenance are listed in Section VII, which is the authority for requisitioning replacements.

Table E-1. Special Tools and Equipment - Organizational Maintenance

Item	***Identifying Number***	***References Fig. Para.***	***Use***
Tool, clutch adjusting (carried on engine shroud access door)	7953545	E-7 E-34	Adjust right- angle drive clutch

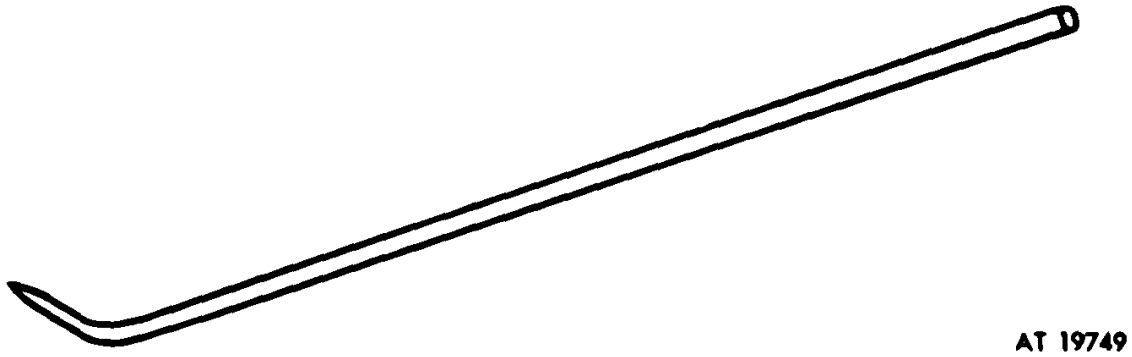

Figure E-6. Special tools and equipment for organizational maintenance.

E-21. Preventive Maintenance Checks and Services.

E-22. The operator and crew are personally responsible for assigned vehicles. Squad, section, and platoon leaders are charged with supervisory responsibility for vehicles pertaining to their command. The peculiar daily preventive-maintenance service (table E-2) will be performed by the operator and crew each day the bulldozer is operated. For common daily preventive-maintenance service routines, refer to paragraph 3-20 and table 3-2.

Table E-2. Daily Preventive - Maintenance Services (Operative and Crew)

Before Operation	***Intervals During Operation***	***After Operation***	***Procedure***
X		X	GENERAL SERVICE OPERATIONS Oil. Check the amount of oil in the reservoir (fig. E-2). Add oil as necessary.

E-23. Troubleshooting.

E-24. The malfunction approach consists of referring to the peculiar troubleshooting table (table E-3) and selecting the probable cause of a particular malfunction. Table E-3 lists various abnormal operations and indications which may occur during inspection and operation of the vehicle. It provides a list of probable causes of the malfunction, corrective actions to be taken.

E-25. Qualification Procedure.

E-26. The peculiar qualification procedures (table E-3) is used for the test approach method of troubleshooting for the early model M8A3 bulldozer. For listing of common qualification procedure, refer to table E-4.

Table E-3. Qualification Procedure

Command	*Response*	*Troubleshooting Reference (Figure No.)*
1. Prerequisites for test (with engine not running).		
a. Check oil in right angle drive	.Oil in right angle drive at proper level ({see lubrication guide).	
2. Engage hydraulic pump with clutch handle.	Clutch engages hydraulic pump.	
3. Place bulldozer operating control handle in the RAISE (R) position (Note: If moldboard is already in raised position and carrying hooks are engaged, disengage carrying hooks).	Moldboard elevates to full-raised position.	E-7
4. Place bulldozer operating handle in the LOWER (L) position..	Moldboard lowers to ground level	E 7
5. Place bulldozer operating handle in the RAISE (R) position and allow moldboard to raise to mid between ground level and carrying hook height, then allow bulldozer operating handle to return to HOLD (H). position. Allow moldboard to remain in mid one (1) minute.	Moldboard remains in mid position for one (1) minute without the moldboard drifting downward more than 1/4 inch position for	E-7
6. Place bulldozer operating handle in the LOWER (L) position and allow moldboard to lower to ground level.. Note. Use a stop watch to time the response of the next step.	Moldboard lowers to ground level	E-7
7. Place bulldozer operating handle in the RAISE (R) position and allow moldboard elevate to the full raised position..	Moldboard elevates from ground level to the full raised position within 5.0 to 6.0 seconds	E-7
8. Place bulldozer operating handle in the FLOAT (F) position and allow moldboard to drift downward to ground level	Moldboard drifts downward to ground level.	E-7
9. Place bulldozer operating handle on RAISE (R) position and raise moldboard to full-raised position	Moldboard elevates to the full-raised position.	E-7
10. Disengage hydraulic pump with clutch handle. pump.	Clutch disengages hydraulic	

E-27. Schematic diagrams and locational views (figure E-7 through E-10) are provided as supporting aids for the peculiar troubleshooting routines for the early model (M8A3) bulldozer. For common troubleshooting routines, refer to paragraph 3-32 and table E-3.

SEE WIRING SCHEMATIC FIGURE 3-11

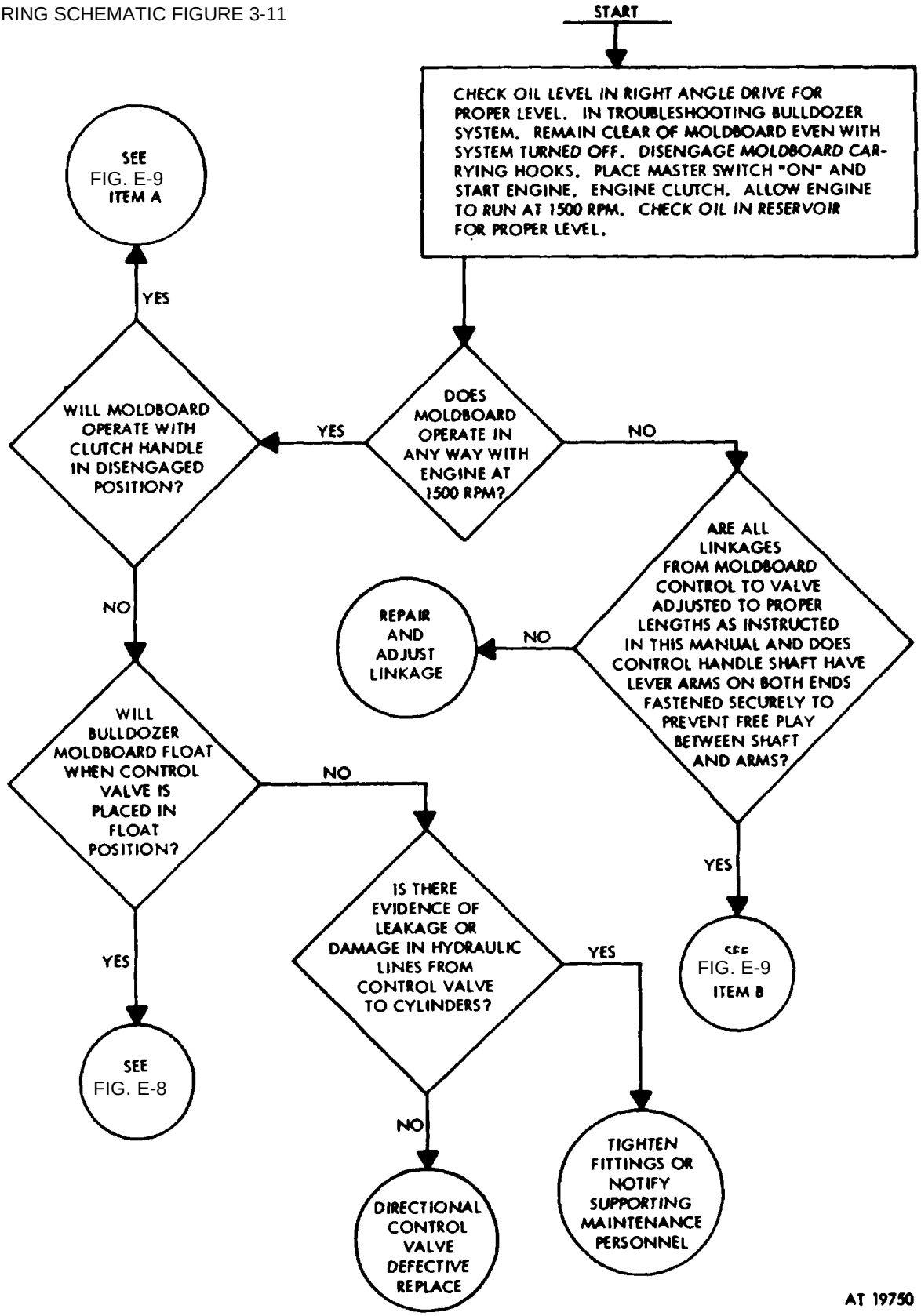

Figure E-7. Troubleshooting (Sheet 1 of 4).

CONTINUED FROM FIGURE E-7

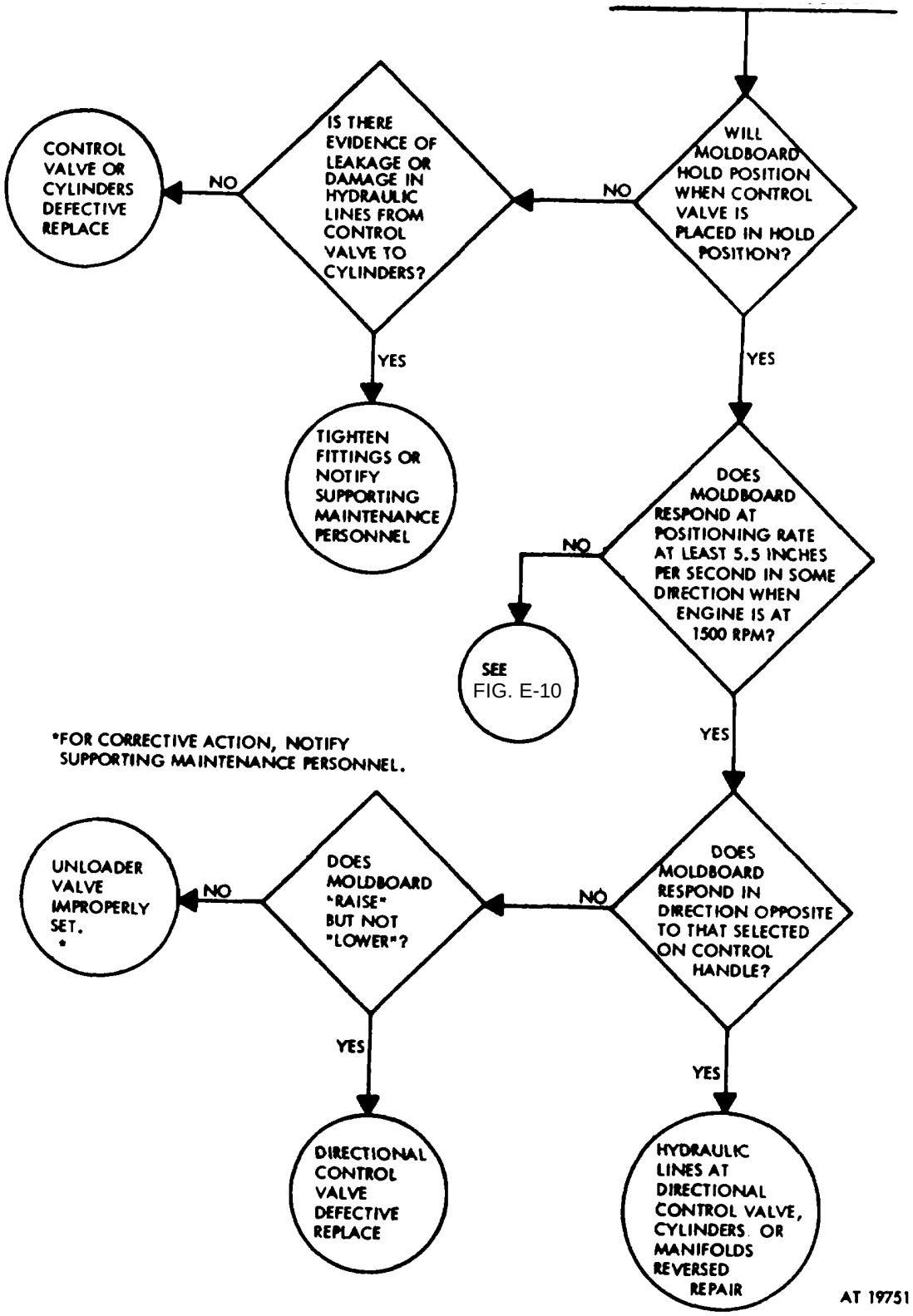

Figure E-8. Troubleshooting (Sheet 2 of 4).

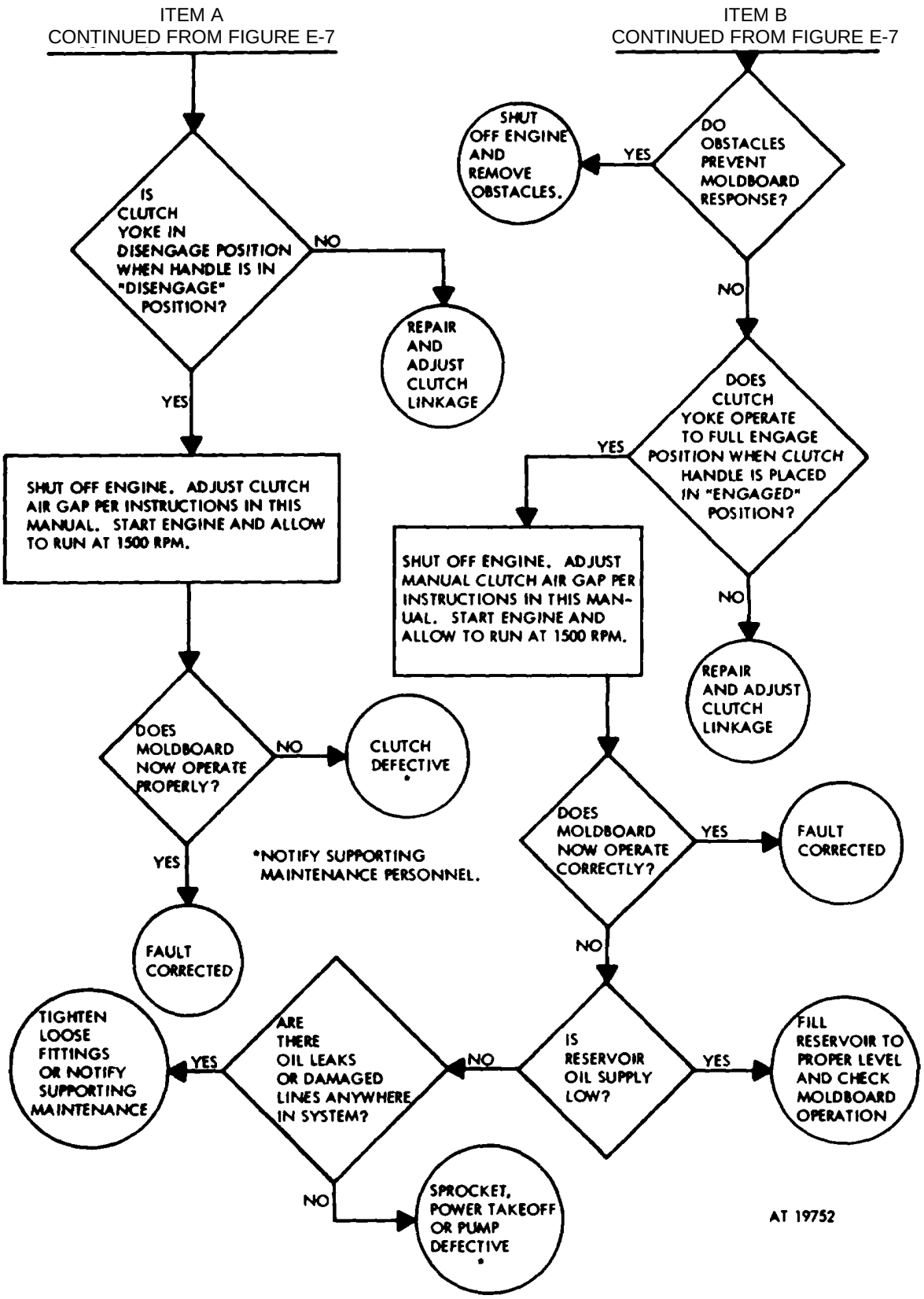

Figure E-9. Troubleshooting (Sheet 3 of 4).

CONTINUED FROM FIGURE E-8

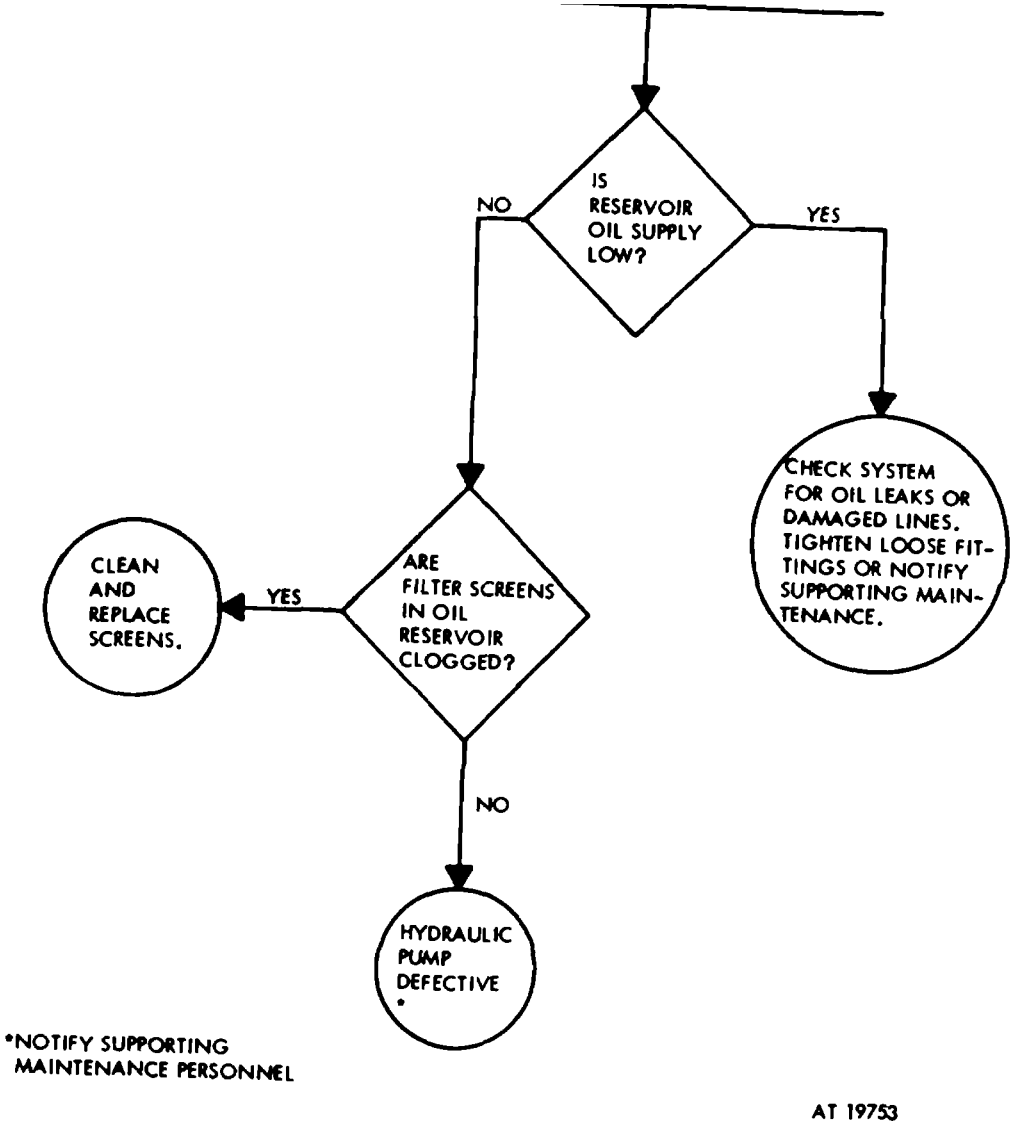

Figure E-10. Troubleshooting (Sheet 4 of 4).

Table E-4. Troubleshooting

Malfunction	Probable cause	Corrective action
1. Erratic moldboard	a. Clutch out of adjustment b. Clutch control linkage binding, distorted or damaged.	a. Adjust clutch (fig. E-16). b. Lubricate linkage with light coat of GAA grease. Repair or replace all damaged or distorted parts of linkage (LO 9-2590-213-12)

E-28. Headlight Assemblies.

E-29. Removal and Installation. Refer to figure E-11 for removal and instructions. Follow the alphabetical sequence views for removal and the numerical sequence of views for installation.

E-30. Power Take-Off Assembly.

E-31. Removal and Installation. The hydraulic pump and power take off assembly group includes the sprocket assembly, and the hydraulic pump and mount assembly. The hydraulic pump and mount assembly is composed of the right angle drive, clutch assembly and the hydraulic pump assembly mounted on a common mount. The hydraulic pump and mount assembly may be removed as unit. However since tilting of the unit is required to lift it from the power plant compartment, prior removal the pump and clutch assemblies is recommended to reduce weight. Refer to figures and E-12 and E-13 for removal and installation of the complete group. Follow the alphabetical sequence of views for removal and the numerical sequence of views for installation.

E-32. Clutch Support and Yoke Assembly.

E-33. Removal and Installation. Refer to figure E-14 for removal and installation instructions. Follow the alphabetical sequence of f views for removal and the numerical sequence of views for installation.

E-34. Clutch Control Assembly.

E-35. Removal and Installation. Refer to figure E-15 for removal and installation instructions. Follow the alphabetical sequence of views for removal and the numerical sequence of views for installation.

E-36. Adjustment

a. General. The clutch is a dry, multiple disk-type clutch The tighter the disks are when engaged, the more torque is transmitted to drive the hydraulic pump. The pump requires a constant torque input in ratio to engine drive peed. When the disks wear, they become loose and the necessary power transmission is lost, and clutch adjustment is required. Erratic performance of the moldboard is an indication of need for clutch adjustment.

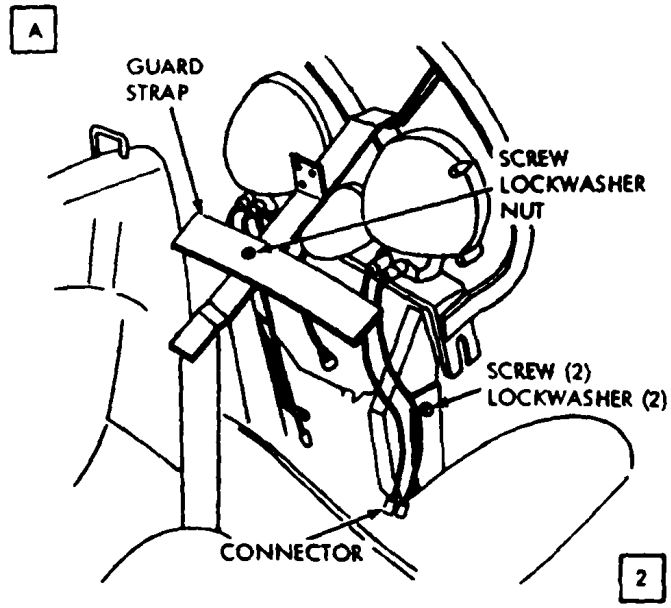

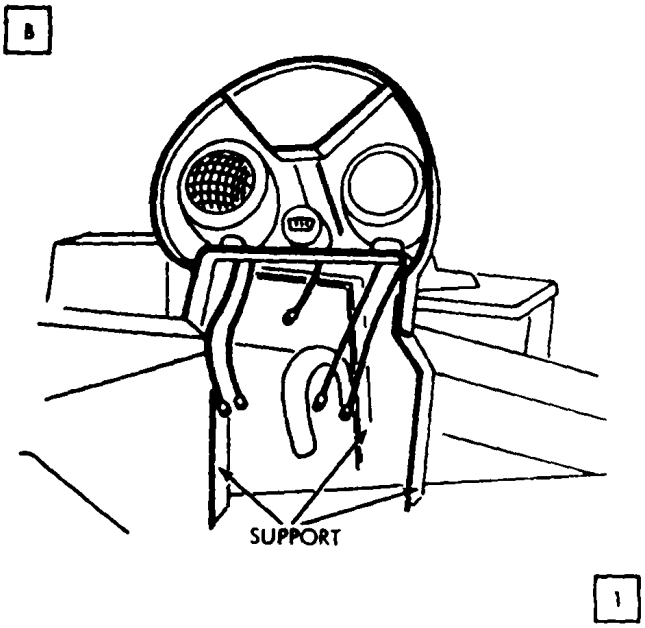

DISCONNECT/CONNECT FIVE ELECTRICAL CONNECTOR! AT RIGHT HEADLIGHT AND SIX CONNECTORS AT LEFT HEADLIGHT.

REMOVE/INSTALL SCREW, LOCKWASHER, NUT, AND GUARD STRAP FROM/TO REAR SUPPORT.

REMOVE/INSTALL TWO SCREWS AND LOCKWASHERS FROM/TO FRONT SUPPORTS.

REMOVE/INSTALL HEADLIGHT ASSEMBLY (LEFT AND RIGHT).

AT 19754

Figure E-11. Removal or installation of headlight assemblies.

PRELIMINARY PROCEDURE:
OPEN REAR GRILLE DOORS AND REMOVE TRANSMISSION SHROUD (TM9-2350-224-20). DRAIN HYDRAULIC SYSTEM (FIGS. 3-21 AND 3-22). DISCONNECT HYDRAULIC TUBE ASSEMBLIES FROM PUMP (FIG. 3-27).

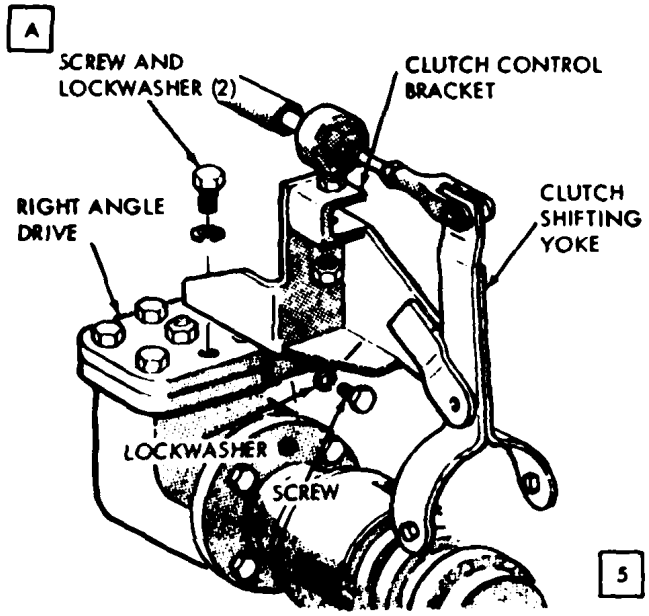

REMOVE/INSTALL CLUTCH CONTROL BRACKET ANO YOKE ASSEMBLY.

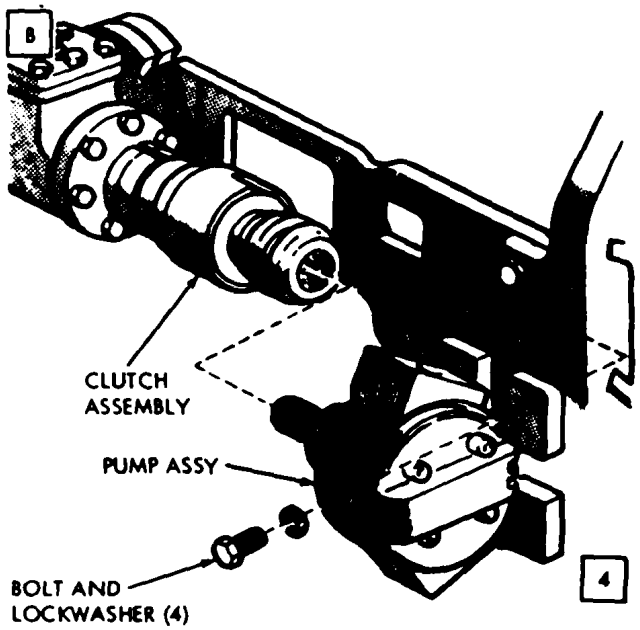

REMOVE/INSTALL FOUR MOUNTING SCREWS.

MOVE HYDRAULIC PUMP TO RIGHT/LEFT TO SEPARATE/CONNECT CLUTCH ASSEMBLY.

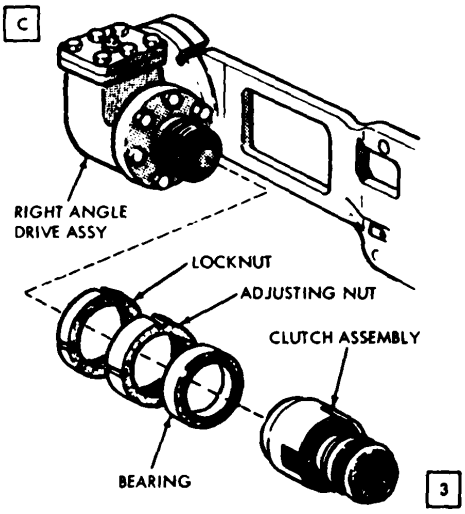

REMOVE/INSTALL LOCKNUT ADJUSTING NUT, BEARING, AND CLUTCH ASSEMBLY.

AT 19755

Figure E-12. Removal installation of hydraulic pump and power take-off group (sheet 1 of 2).

D

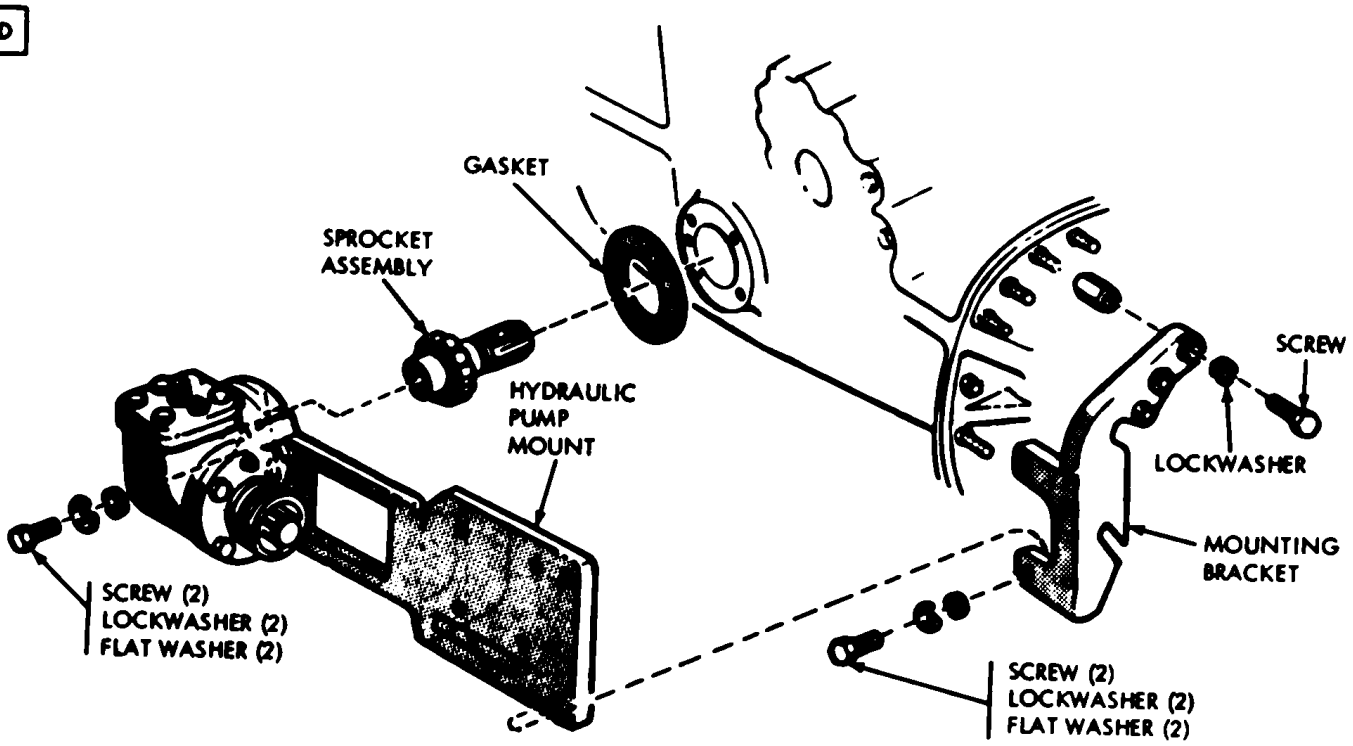

2

REMOVE/INSTALL FOUR SCREWS AND REMOVE/INSTALL RIGHT ANGLE DRIVE AND HYDRAULIC PUMP MOUNT AS A UNIT.

REMOVE/INSTALL SCREW AND LOCKWASHER SECURING MOUNTING BRACKET FROM/TO TRANSMISSIOI

E

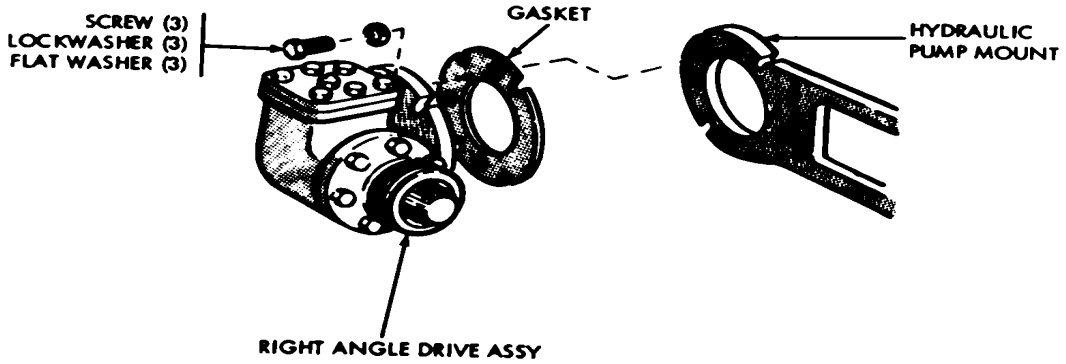

1

REMOVE/INSTALL THREE SCREWS, LOCKWASHERS AND FLAT WASHER SECURING RIGHT ANGLE DRIVE ASSEMBLY FROM/TO HYDRAULIC PUMP MOUNT.

REMOVE/INSTALL GASKET.

AT 19759

Figure E-13. Removal or installation of hydraulic pump and power take-off group (sheet 2 of 2).

PRELIMINARY PROCEDURE:
OPEN REAR GRILLE DOORS AND REMOVE
TRANSMISSION SHROUD (TM9-2350-224-20)

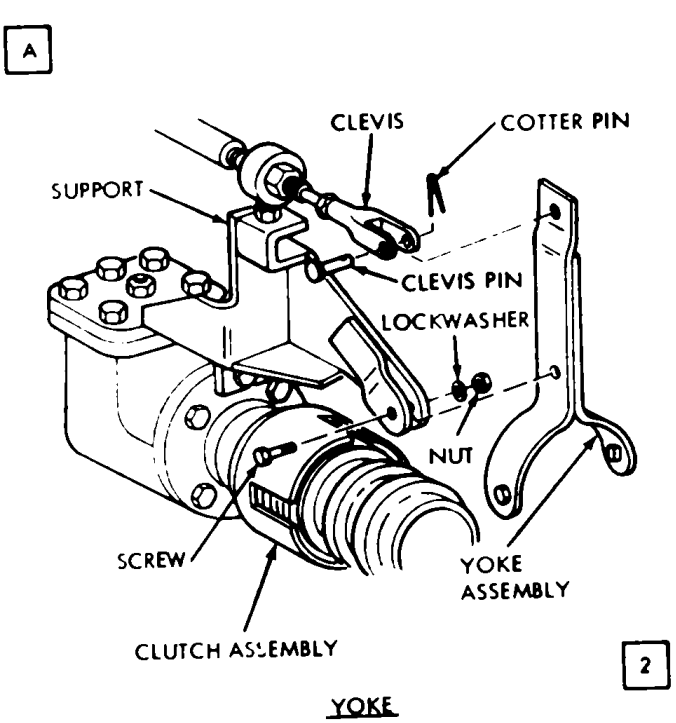

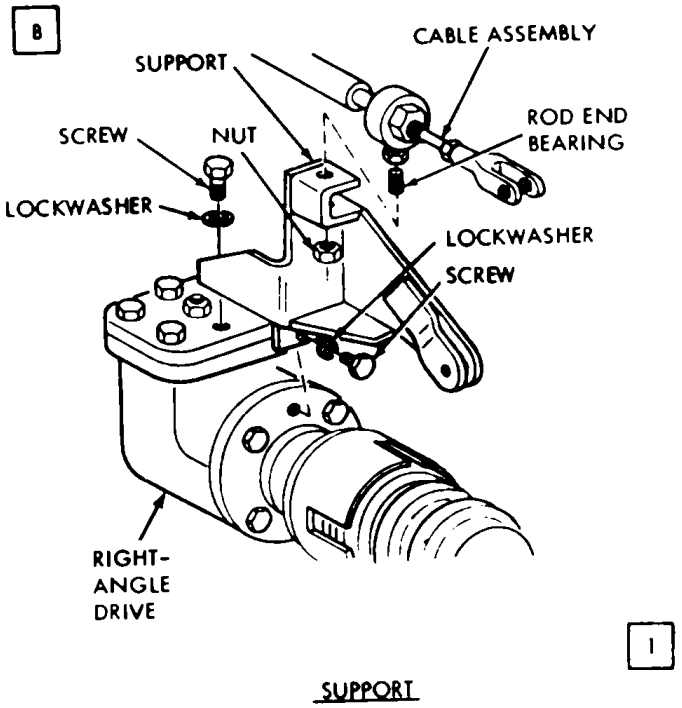

REMOVE/INSTALL SCREW, LOCKWASHER AND NUT FROM/TO YOKE ASSEMBLY.

REMOVE/INSTALL COTTER PIN AND CLEVIS PIN.

REMOVE/INSTALL YOKE ASSEMBLY.

REMOVE/INSTALL NUT SECURING ROD END BEARING FROM/TO SUPPORT.

REMOVE/INSTALL TWO SCREWS AND LOCKWASHERS SECURING SUPPORT FROM/TO RIGHT ANGLE DRIVE.

REMOVE/INSTALL SUPPORT.

AT 19757

Figure E-14. Removal or installation of hydraulic clutch support and yoke assembly.

PRELIMINARY PROCEDURE:
OPEN REAR GRILLE DOORS AND REMOVE
TRANSMISSION SHROUD (TM9-2350-224-20).

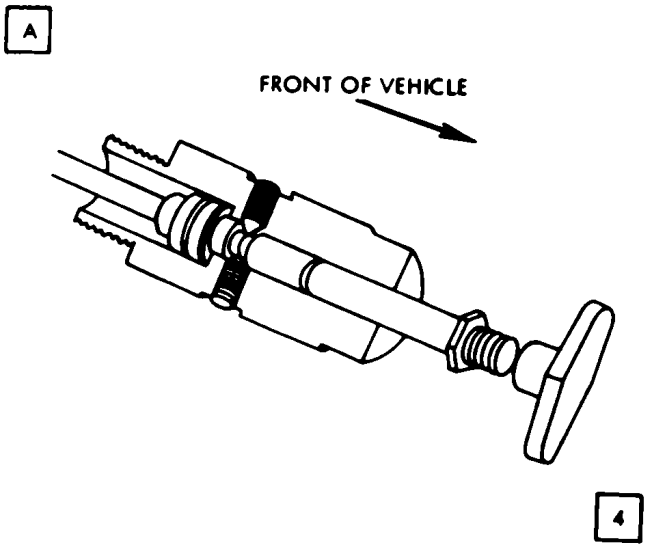

REMOVE/INSTALL HANDLE AND HOUSING FROM/TO

CABLE AND BULKHEAD.

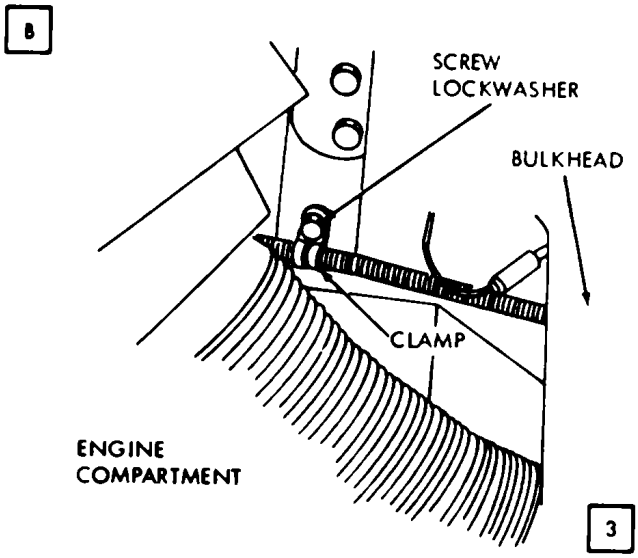

REMOVE/INSTALL SCREW, LOCKWASHER, AND CLAMP.

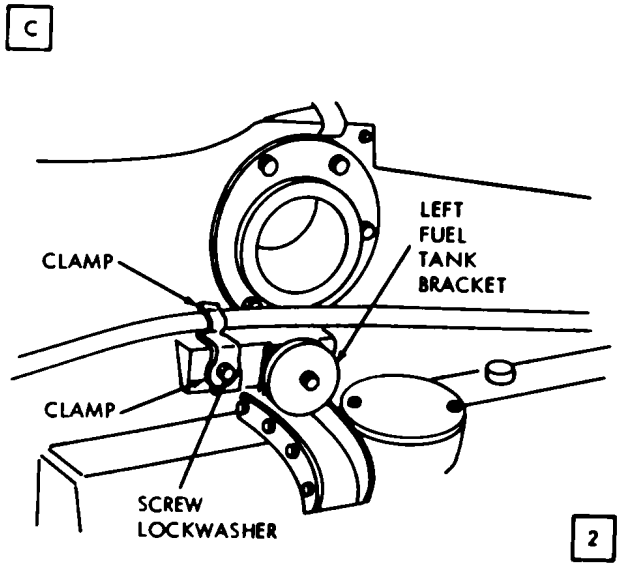

REMOVE/INSTALL SCREW AND LOCKWASHER FROM/TO LEFT FUEL TANK BRACKET.

REMOVE/INSTALL SCREW, LOCKWASHER FROM/TO CLAMP.

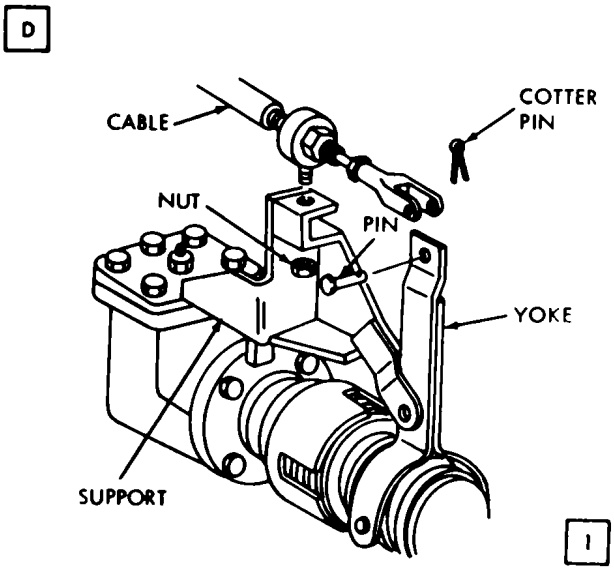

REMOVE/INSTALL COTTER PIN AND PIN SECURING CABLE FROM/TO YOKE.

REMOVE/INSTALL NUT SECURING CABLE FROM/TO SUPPORT.

AT 19758

Figure E-15. Removal or installation of clutch control assembly.

Caution: When erratic moldboard performance is evident, the clutch should be examined, since overheating by clutch slippage will damage the equipment.

b. Adjustment of clutch.

(1) Disengage clutch

***Note*. Clutch must be cool If clutch has become heated from slippage, wait.**

(2) Disconnect control cable from yoke (figure E-16).

(3) Refer to figure E-16. Lift lock spring with clutch adjusting took, 7953545.

(4) Turn clutch collar clockwise to tighter two to four notches (5) Place yoke in engaged position. Start engine and raise and lower moldboard. The moldboard should raise or lower with a steady (not erratic) movement (6) Lower the moldboard so that it is supporting the weight of the vehicle. Moldboard should support the vehicle weight without any sign of erratic operation. If it does not, tighten clutch another two to four notches and repeat the above tests. When satisfactory operation is attained adjust control linkage a outlined in step c.

c. Adjustment of Clutch Control Linkage

(1) Set clutch control cable in disengaged detent position (handle in) and position shifting yoke so that there is .010 clearance between dogs and clutch collar.

(2) Lengthen or shorten cable by screwing clevis "in" or "out" until holes in clevis aline with hole in yoke arm.

(3) Install clevis pin.

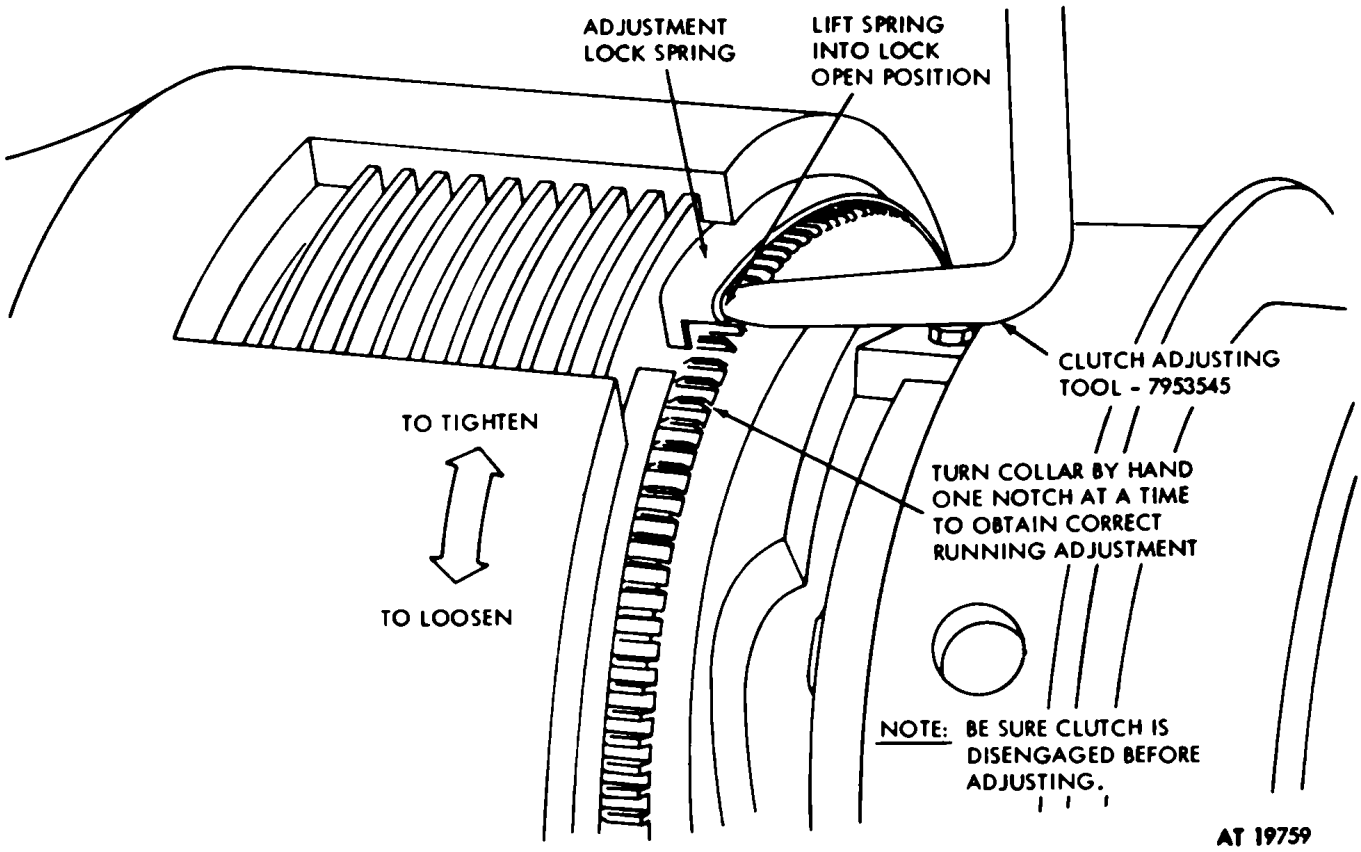

Figure E-16. Clutch adjustment.

(4) Check operation of control cable and yoke to make certain that when in disengage detent position there is a .010 clearance of the dogs and that when in the disengaged detent position (handle in) that the clutch is fully engaged.

Section VI. DIRECT SUPPORT, GENERAL SUPPORT AND DEPOT MAINTENANCE

E-37. General

E-38. This section contains information for direct support, general support and depot maintenance peculiar to the early model M8A3 bulldozer. The instructions contain information on equipment that is beyond the scope of tools, equipment, personnel, or supplies normally available to organizational maintenance.

E-39. Troubleshooting.

E40. Tables E-5 and E-6 lists peculiar malfunctions, their probable cures, and the corrective action which can be performed by the supporting maintenance personnel. For common troubleshooting routines, refer to paragraph 4-18.

Table E-5. Troubleshooting Power Take-Off Group

Malfunction	*Probable Cause*	*Corrective Action*	*Lowest Maintenance Category*	
			Repair	*Replace*
Power Take-Off Group Assembly Inoperative	a) Defective sprocket assembly	Repair/replace defective sprocket assembly	*DS	*DS
	b) Defective hydraulic pump and mount assembly (see table 3-8)	Repair/ replace defective pump and mount assembly	*DS	*DS

* Can also be performed by organizational maintenance personnel

Table E-6. Troubleshooting Hydraulic Pump and Mount Assembly

Malfunction	*Probable Cause*	*Corrective Action*	*Lowest Maintenance Category*	
			Repair	*Replace*
Hydraulic Pump and Mount Assembly Defective	a) Defective mount assembly	Repair/replace defective mount assembly	GS	*GS
	b) Defective right angle drive assembly	Repair/replace defective right angle drive assembly	DS	DS
	c) Defective manual clutch	Repair/replace defective clutch	DS	*DS
	d) Defective hydraulic pump assembly	Repair/replace defective hydraulic pump assembly	DS	*DS

* Can also be replaced by organizational maintenance personnel.

E-41. Clutch Assembly and Related Components. The clutch assembly and related components are mounted in the vehicle a an integral part of the pump and drive assembly (pump, clutch, and right-angle drive).

a. Removal and Installation. Refer to figure E-12 and E-13 for instructions on removal and installation of the complete unit.

b. Disassembly. For disassembly of clutch assembly and related components refer to figure E-17 and proceed as follows:

(1) Relieve spring setting by lifting adjustment lock spring (fig. E-16), and turn adjustment lock to its lowest point.

(2) Drive out anchor pin (fig. E-17) using untapered flatnose punch.

(3) Remove from shaft the parts shown in figure E-17.

c. Cleaning. Refer to paragraph 4-21 for cleaning instructions.

d. Inspection. Check the components for wear limits as specified in table E-7.

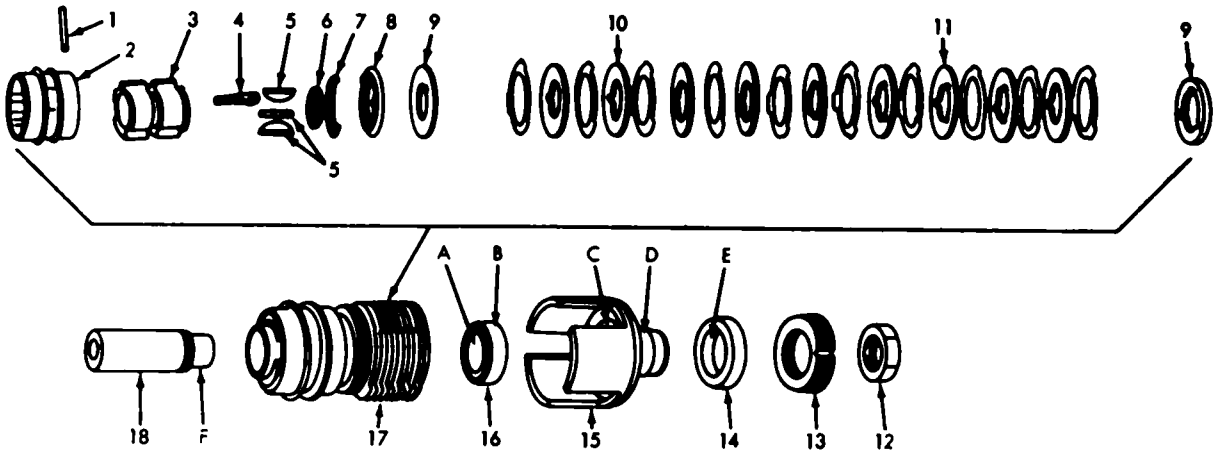

1 - PIN
2 - SLEEVE
3 - CLUTCH BODY
4 - CLUTCH DOG ASSEMBLY
5 - KEY
6 - SPLIT RING
7 - LOCK SPRING
8 - COLLAR
9 - PLATE
10 - DISK
11 - DISK
12 - LOCKNUT
13 - NUT
14 - BEARING
15 - CUP
16 - BEARING
17 - CLUTCH ASSEMBLY
18 - SHAFT

Figure E-17. Disassembly or assembly of clutch assembly and related components.

Table E-7. Repair and Rebuild Standards for Clutch Assembly and Related Components

				Wear Limits	
Fig No	*Ref Letter*	*Point of Measurement*	*Size and Fit of New Parts*	*Direct and General Support*	*Depot*
E-19	A	ID of Bearing	1.3775 to 1.3780	(*)	(*)
E-19	B	OD of Bearing	2.8341 to 2.8346	(*}	(*)
E-19	C'	ID of Bearing Recess in Spider	2.8346 to 2.8334	(*)	(*)
E-19.	B-C	Fit of Bearing in Recess	0.0000 to 0.0007 T	(*)	(*)
E-19	D	OD of Spider Spindle	1.9686 to 1.9690	(*)	(*}
E-19	E	ID of Bearing	1.9680 to 1.9685	(*)	(*)
E-19	F	OD of Shaft	1.3770 to 1.3776	(*)	(*}
E-19	A-F	Fit of Shaft in Bearing	0.0001T to 0.001L	(*)	(*)
E-19	D-E	Fit of Spindle in Bearing	0.0001T to 0.001T	(*)	(*)

e. Assembly

(1) Tap 3 keys into slots in shaft. Keys should fit tightly and not rock. If installing new keys, grind lightly, if necessary, to obtain proper fit.

(2) Fit two split rings into groove in shaft.

(3) Slide thrust plate into shaft and over the keys and split rings.

Note. **When installing thrust plate, counterbore of plate must face rings, so that the plate fits over the rings.**

(4) Stack disks in the order indicated in figure E-17, line key slots of inner disks so they will slip over the keys, and slide onto shaft.

(5) Install adjustment lock spring into the two notches on pressure plate, and slide plate onto shaft.

(6) Slide adjustment collar onto shaft.

(7) Install the three dogs to pins on clutch body.

(8) Slide shifter sleeve onto clutch body, install on shaft, and secure to shaft with anchor pin.

f. Adjustment. To adjust clutch assembly, refer to figure E-16.

Section VII. REPAIR PART LIST AND SPECIAL TOOLS

E-42. General

E-43. This section provides a list of peculiar repair parts and special tools required for the performance of organizational, direct support, general support, and depot maintenance of the early model M8A3 bulldozer. This repair part list and special tools must be used in conjunction with Appendix D since only peculiar repair parts for early model M8A3 bulldozers are identified. All references in this section shall be construed to mean early model M8A3 bulldozers, serial numbers 1 through 59.

E-44. **Peculiar Repair Parts Illustrations.**

a. The illustrations in this section identify peculiar repair parts only. Refer to illustrations in Appendix D for information pertaining to common repair parts.

b. Appendix D figures are referenced for peculiar repair parts identification wherever common configuration exists. This eliminates duplicating illustrations.

E-45. Common Repair Parts Illustrations**.** Both Appendix D illustrations and this section illustrations must be used together for complete early model M8A3 repair parts coverage.

E-46. This peculiar Repair Parts and Special Tools List is divided into the following paragraphs.

a. Prescribed Load Allowance (PLA) Paragraph E-48. A listing of the peculiar repair parts, special tools, test and support equipment having quantitative allowances for initial stockage at the organizational level for the early model M8A3 bulldozer. For listing of common repair parts, special tools, test and support equipment, refer to Appendix D, Section II.

b. Repair Parts Paragraph E-49. A list of peculiar repair parts authorized for the performance of maintenance at all levels for the early model M8A3 bulldozer. For listing of common repair parts, refer to Appendix D, Section III.

c. Special Tools, Test and Support Equipment Paragraph E-50. A list of peculiar special tools, test and support equipment authorized for the performance of maintenance at all levels for early model M8A3 bulldozers. For listing of common special tools, test and support equipment, refer to Appendix D, Section IV.

E-47. Refer to Appendix D for information relating to the following:

- Explanation of columns
- Special information
- How to locate repair parts
- Abbreviations and symbols
- Federal Supply Codes for manufacturers
- Recommendations for maintenance publication improvements

E-48. Prescribed Load Allowance (Peculiar to Early Model Bulldozer)

(1) FEDERAL STOCK-NUMBER	(2) DESCRIPTION		(3) 15-Day Organizational Maintenance Allowance			
			(a) 1-5	(b) 6-20	(c) 21-50	(d) 51-100
2520-653-9219	Power Take-Off: right angle drive (7383718)	*	*	*	2	
2520-653-9221	Pump Assembly: hydraulic (7049999)	*	*	*	2	
2520-653-9216	Clutch Assembly: hydraulic pump (7049996)	*	*	*	2	
2590-659-2346	Hose Assembly: front fender (7044032)	*	*	*	2	
2520-726-1634	Cylinder Assembly: right hoist (7361634)	*	*	*	2	
2520-726-1633	Cylinder Assembly: left hoist (7361633)	*	*	*	2	
2590-661-1693	Hose Assembly- front fender (7044033)	*	*	*	2	
	for bottom of tables E-5, E-6.					

E-49. REPAIR PARTS LIST (PECULIAR TO EARLY MODEL BULLDOZER)

(1) SMR CODE	(2) FEDERAL STOCK NO.	(3) DESCRIPTION	(4) UNIT OF MEAS-URE	(5) QTY. INC. IN UNIT	(6) ORGANIZATIONAL 15 DAY MAINT. ALLOWANCE				(7) DIRECT SUPPORT 30-DAY MAINT. ALLOWANCE			(8) GENERAL SUPPORT 30-DAY MAINT. ALLOWANCE			(9) 1 YR. ALW. PER 100 EQUIP/ CNTGCY PLAN-NING	(10) DEPOT MAINT. ALW PER 100 EQUIP	(11) ILLUS-TRATION	
					(A) 1-5	(B) 6-20	(C) 21-50	(D) 51-100	(A) 1-20	(B) 21-50	(C) 51-100	(A) 1-20	(B) 21-50	(C) 51-00			(A) FIG NO.	(B) ITEM NO.
		GROUP-20 - HOIST, WINCH, CAPSTAN, WINDLASS POWER CONTROL UNIT, AND POWER TAKE-OFF																
		2004 - RIGHTANGLE DRIVE																
P-F2520	-653-9211	GEARSHAFT SET: right angle drive (7383939)	ea	1					*	*	1	*	*	1	6	10	D-13	10
P-O	4730-330-0111	FITTING, LUBRICATION: right angle drive pressure relief (7389290)	ea	1	*	*	*	*	*	*	1	*	*	1	6	20	D-13	17
P-O	4730-653-9537	ADAPTER: right angle drive filter (7699830)	ea	1	*	*	*	*	*	*	1	*	*	1	6	10	D-13	18
P-O	5330-542-0981	GASKET: right angle drive seal (150192)	ea	1	*	*	*	*	*	*	1	*	*	1	10	100	D-13	19
P-O	4730-278-6344	PLUG, PIPE, MAGNETIC: right angle drive housing (502393)	ea	1	*	*	*	*	*	*	1	*	*	1	6	10	D-13	24
P-O	4730-278-3389	PLUG, PIPE: right angle drive oil level inspection (219190)	ea	1	*	*	*	*	*	*	1	*	*	1	6	10	D-13	25
		2006 - HYDRAULIC SYSTEM ARMOR GUARDS																
X20		GUARD ASSEMBLY: (7699979)	ea	1	*	*	*	*	*	*	*	*	*	*	0	0	D-17	1
X20		GUARD: (7699966)	ea	1	*	*	*	*	*	*	*	*	*	*	0	0	D-17	4
X20		GUARD ASSEMBLY: (8744703)	ea	1	*	*	*	*	*	*	*	*	*	*	0	0	D-17	6
X20		GUARD ASSEMBLY: left (7383811)	ea	1	*	*	*	*	*	*	*	*	*	*	0	0	D-17	7
X20		GUARD ASSEMBLY: right (7383812)	ea	1	*	*	*	*	*	*	*	*	*	*	0	0	D-17	8
X20		BARS: (8744721)	ea	1	*	*	*	*	*	*	*	*	*	*	0	0	D-17	9
X20		GUARD ASSEMBLY: (10873018)	ea	1	*	*	*	*	*	*	*	*	*	*	0	0	D-18	2
X20		GUARD ASSEMBLY: (7699948)	ea	1	*	*	*	*	*	*	*	*	*	*	0	0	D-18	4

(1) SMR CODE	(2) FEDERAL STOCK NO.	(3) DESCRIPTION	(4) UNIT OF MEAS-URE	(5) QTY. INC. IN UNIT	(6) ORGANIZATIONAL 15 DAY MAINT. ALLOWANCE				(7) DIRECT SUPPORT 30-DAY MAINT. ALLOWANCE			(8) GENERAL SUPPORT 30-DAY MAINT. ALLOWANCE			(9) 1 YR. ALW. PER 100 EQUIP/ CNTGCY PLAN-NING	(10) DEPOT MAINT. ALW PER 100 EQUIP	(11) ILLUS-TRATION	
					(A) 1-5	(B) 6-20	(C) 21-50	(D) 51-100	(A) 1-20	(B) 21-50	(C) 51-100	(A) 1-20	(B) 21-50	(C) 51-00			(A) FIG NO.	(B) ITEM NO.
		2006 - HYDRAULIC SYSTEM ARMOR GUARDS--Continued																
X20		GUARD: (10944895)	ea	1	*	*	*	*	*	*	*	*	*	*	0	0	D-19	1
X20		HOUSING: (10944905)	ea	1	*	*	*	*	*	*	*	*	*	*	0	0	D-20	1
X20		COVER: (10944909)	ea	1	*	*	*	*	*	*	*	*	*	*	0	0	D-21	4
X20		COVER: (10944910)	ea	1	*	*	*	*	*	*	*	*	*	*	0	0	D-21	5
X20		PLATE: (10944904)	ea	1	*	*	*	*	*	*	*	*	*	*	0	0	D-21	6
		2006 - HYDRAULIC HOSES, LINES, TUBES, FITTINGS AND VALVES																
P-O	4730-277-9190	ELBOW: control valve to low pressure tube (1), adapter to reservoir (1) reservoir to pump (2) (8383705)	ea	4	*	*	*	*	*	*	1	*	*	1	14	60	D-22	1
P-O		TUBE: control valve to manifold (10944866)	ea	1	*	*	*	*	*	*	1	*	*	1	6	10	D-22	2
P-O		TUBE: control valve to manifold (10944867)	ea	1	*	*	*	*	*	*	1	*	*	1	6	10	D-22	3
P-O		CONNECTOR ASSEMBLY: low pressure tube to manifold (423046)	ea	1	*	*	*	*	*	*	1	*	*	1	6	10	D-22	4
P-O		MANIFOLD ASSEMBLY: (10944870)	ea	1	*	*	*	*	*	*	1	*	*	1	6	10	D-22	10
X20		PLATE ASSEMBLY: (10944893)	ea	1	*	*	*	*	*	*	*	*	*	1	0	0	D-22	11
P-O	4730-350-9790	CONNECTOR ASSEMBLY: high pressure tube to manifold (423045)	ea	1	*	*	*	*	*	*	1	*	*	1	6	10	D-22	12
P-O	5330-194-3720	GASKET: flange to elbow (546868)	ea	1	*	*	*	*	*	*	1	*	*	1	6	10	D-22	13

E-49. REPAIR PARTS LIST (PECULIAR TO EARLY MODEL BULLDOZER)

(1) SMR CODE	(2) FEDERAL STOCK NO.	(3) DESCRIPTION	(4) UNIT OF MEAS-URE	(5) QTY. INC. IN UNIT	(6) ORGANIZATIONAL 15 DAY MAINT. ALLOWANCE				(7) DIRECT SUPPORT 30-DAY MAINT. ALLOWANCE			(8) GENERAL SUPPORT 30-DAY MAINT. ALLOWANCE			(9) 1 YR. ALW. PER 100 EQUIP/ CNTGCY PLAN-NING	(10) DEPOT MAINT. ALW PER 100 EQUIP	(11) ILLUS-TRATION	
					(A) 1-5	(B) 6-20	(C) 21-50	(D) 51-100	(A) 1-20	(B) 21-50	(C) 51-100	(A) 1-20	(B) 21-50	(C) 51-00			(A) FIG NO.	(B) ITEM NO.
		2006 - HYDRAULIC HOSES, LINES, TUBES, FITTINGS AND VALVES -Continued																
P-O	4730-657-1497	ELBOW: pump to control valve high pressure tube (7054149)	ea	3	*	*	*	*	*	*	1	*	*	1	10	30	D-22	14
P-O		TUBE: straight (10944887)	ea	1	*	*	*	*	*	*	1	*	*	1	6	10	D-22	17
P-O		HOSE ASSEMBLY: (10944888)	ea	1	*	*	*	*	*	*	1	*	*	1	6	10	D-22	21
P-O		TUBE ASSEMBLY: (10944889)	ea	1	*	*	*	*	*	*	1	*	*	1	6	10	D-22	23
P-O	2590-656-3610	TUBE ASSEMBLY: (7699923)	ea	1	*	*	*	*	*	*	1	*	*	1	6	10	D-22	32
P-O		TUBE ASSEMBLY: (10944885)	ea	1	*	*	*	*	*	*	1	*	*	1	6	10	D-22	33
P-O		TUBE: (10944882)	ea	1	*	*	*	*	*	*	1	*	*	1	6	10	D-22	34
P-O		HOSE ASSEMBLY: (10944881)	ea	1	*	*	*	*	*	*	1	*	*	1	6	10	D-22	37
P-O		TUBE: (7699913)	ea	1	*	*	*	*	*	*	1	*	*	1	6	10	D-22	39
P-O		ADAPTER, ELBOW: (10944872)	ea	1	*	*	*	*	*	*	1	*	*	1	6	10	D-22	46
P-O	5330-198-6190	GASKET: elbow to adapter (501236)	ea	1	*	*	*	*	*	*	1	*	*	1	14	100	D-22	47
P-O		ADAPTER, ELBOW: (10944875)	ea	1	*	*	*	*	*	*	1	*	*	1	6	10	D-22	48
P-O	5330-256-0189	GASKET: elbow to adapter (546861)	ea	1	*	*	*	*	*	*	1	*	*	1	14	100	D-22	49
P-O		ELBOW: (10883659)	ea	1	*	*	*	*	*	*	1	*	*	1	6	10	D-22	50
P-O		RESERVOIR ASSEMBLY: hydraulic oil (10944877)	ea	1	*	*	*	*	*	*	1	*	*	1	6	10	D-22	53
P-O	2590-661-1693	HOSE ASSEMBLY: rubber front fender (7044033)	ea	1	*	*	*	2	*	2	2	*	2	2	6	10	D-23	1
P-O	4730-569-9649	ADAPTER: right, fender hose to tube (8735784)	ea	2	*	*	*	*	*	*	1	*	*	1	10	20	D-23	2
P-O	2520-569-9634	TUBE: manifold guard inner (8744722)	ea	1	*	*	*	*	*	*	1	*	*	1	6	10	D-23	3

E-49. REPAIR PARTS LIST (PECULIAR TO EARLY MODEL BULLDOZER)

(1) SMR CODE	(2) FEDERAL STOCK NO.	(3) DESCRIPTION	(4) UNIT OF MEAS-URE	(5) QTY. INC. IN UNIT	(6) ORGANIZATIONAL 15 DAY MAINT. ALLOWANCE				(7) DIRECT SUPPORT 30-DAY MAINT. ALLOWANCE			(8) GENERAL SUPPORT 30-DAY MAINT. ALLOWANCE			(9) 1 YR. ALW. PER 100 EQUIP/ CNTGCY PLAN-NING	(10) DEPOT MAINT. ALW PER 100 EQUIP	(11) ILLUS-TRATION	
					(A) 1-5	(B) 6-20	(C) 21-50	(D) 51-100	(A) 1-20	(B) 21-50	(C) 51-100	(A) 1-20	(B) 21-50	(C) 51-00			(A) FIG NO.	(B) ITEM NO.
		2006 - HYDRAULIC HOSES, LINES, TUBES, FITTINGS AND VALVES -Continued																
P-O	4730-569-9654	ADAPTER: straight (8713679,	ea	2	*	*	*	*	*	*	1	*	*	1	10	30	D-23	4
P-O	2520-564-5492	HOSE ASSEMBLY: elbow to front manifold upper (8686926)	ea	2	*	*	*	*	*	*	1	*	*	1	12	50	D-23	5
P-O	4730-569-9647	ELBOW ASSEMBLY: manifold hose to cylinder tube (8735785)	ea	4	*	*	*	*	*	*	1	*	*	1	14	40	D-23	6
P-O	2520-564-5487	HOSE ASSEMBLY: cylinder swing joint to elbow upper (8686924)	ea	2	*	*	*	*	*	*	1	*	*	1	12	50	D-23	7
P-O	2520-564-5485	HOSE ASSEMBLY: cylinder swing joint to elbow lower (8686923)	ea	2	*	*	*	*	*	*	1	*	*	1	12	50	D-23	13
P-O	2520-564-5489	HOSE ASSEMBLY: elbow to front manifold, lower (8686925)	ea	2	*	*	*	*	*	*	1	*	*	1	12	50	D-23	14
P-O	2520-569-9640	TUBE ASSEMBLY: metal preformed (8744754)	ea	1	*	*	*	*	*	*	1	*	*	1	6	10	D-23	16
P-O	2590-659-2346	HOSE ASSEMBLY: front fender (7044032)	ea	1	*	*	*	*	*	*	1	*	*	1	6	10	D-23	17
P-OR	2520-726-1634	CYLINDER ASSEMBLY: right hoist (7261634)	ea	1	*	*	*	*	*	*	1	*	*	1	6	10	D-23	19
P-OR	2520-726-1633	CYLINDER ASSEMBLY: left hoist (7261633)	ea	1	*	*	*	*	*	*	1	*	*	1	6	10	D-23	20
		2006- HYDRAULIC CYLINDER AND RAM ASSEMBLY																
X10		CYLINDER ASSEMBLY: left (7261636)	ea	1													D-25	1
X10		CYLINDER ASSEMBLY: right (7261637)	ea	1													D-25	1
P2F		HEAD: (8668466)	ea	2					*	*	*	*	*	*	5	*	D-25	13
P2F		PISTON ROD: (7323548)	ea	2					*	*	*	*	*	*	5	*	D-25	14

E-49. REPAIR PARTS LIST (PECULIAR TO EARLY MODEL BULLDOZER)

(1) SMR CODE	(2) FEDERAL STOCK NO.	(3) DESCRIPTION	(4) UNIT OF MEAS-URE	(5) QTY. INC. IN UNIT	(6) ORGANIZATIONAL 15 DAY MAINT. ALLOWANCE				(7) DIRECT SUPPORT 30-DAY MAINT. ALLOWANCE			(8) GENERAL SUPPORT 30-DAY MAINT. ALLOWANCE			(9) 1 YR. ALW. PER 100 EQUIP/ CNTGCY PLAN-NING	(10) DEPOT MAINT. ALW PER 100 EQUIP	(11) ILLUS-TRATION	
					(A) 1-5	(B) 6-20	(C) 21-50	(D) 51-100	(A) 1-20	(B) 21-50	(C) 51-100	(A) 1-20	(B) 21-50	(C) 51-00			(A) FIG NO.	(B) ITEM NO.
		2006 - HYDRAULIC RESERVOIR ASSEMBLY																
P-O	4730-330-0111	VALVE: male extra shortea (7389290)	1	*	*	*	*	*	*	1	*	*	1	8	20	D-26	1	
P20		COVER ASSEMBLY: (7699930) NON-ILLUSTRATED ITEM	ea	1	*	*	*	*	*	*	*	*	*	*	4	*	D-26	16
P-O	5330-054-6860	PACKING, PREFORMED: (546860) NON-ILLUSTRATED ITEM	ea	1	*	*	*	*	*	*	1	*	*	1	12	100	D-26	-
P-O	5330-141-2418	WASHER: back-up outlet tube to manifold (7064688)	ea	1	*	*	*	*	*	*	1	*	*	1	12	100	D-26	-
P-O	4730-595-1885	CONNECTOR: outlet tube to manifold (8693856)	ea	1	*	*	*	*	*	*	1	*	*	1	6	10	D-26	-
P-O	5340-321-6146	RING: split (8693923)	ea	1	*	*	*	*	*	*	1	*	*	1	12	100	D-26	-
P-O	4730-289-1556	NUT: outlet tube to manifold	ea	1	*	*	*	*	*	*	1	*	*	1	6	10	D-26	-
P-O	5330-198-6190	PACKING, PREFORMED: high flexibility (501236)	ea	1	*	*	*	*	*	*	1	*	*	1	12	100	D-26	-
		2006 - DIRECTIONAL CONTROL VALVE																
P20		FLANGE ASSEMBLY: (7699900)	ea	1	*	*	*	*	*	*	*	*	*	*	5	*	D-27	3
P20		FLANGE ASSEMBLY: (7699902)	ea	1	*	*	*	*	*	*	*	*	*	*	5	*	D-27	11
P-O	5310-516-5070	NUT: safety unloader valve elbow lock (5165070)	ea	1	*	*	*	*	*	*	1	*	*	1	8	20	D-27	15
P-O	2590-690-1150	TUBE ASSEMBLY: control valve bulldozer (8762603)	ea	1	*	*	*	*	*	*	1	*	*	1	6	10	D-27	22
		2006 - MOLDBOARD TILT ARMS, AND RELATED ITEMS																
P-O	5310-274-9352	NUT: PLAIN, WING: (126032)	ea	2	*	*	*	*	*	*	1	*	*	1	12	50	D-28	6

E-49. REPAIR PARTS LIST (PECULIAR TO EARLY MODEL BULLDOZER)

(1) SMR CODE	(2) FEDERAL STOCK NO.	(3) DESCRIPTION	(4) UNIT OF MEAS-URE	(5) QTY. INC. IN UNIT	(6) ORGANIZATIONAL 15 DAY MAINT. ALLOWANCE				(7) DIRECT SUPPORT 30-DAY MAINT. ALLOWANCE			(8) GENERAL SUPPORT 30-DAY MAINT. ALLOWANCE			(9) 1 YR. ALW. PER 100 EQUIP/ CNTGCY PLAN-NING	(10) DEPOT MAINT. ALW PER 100 EQUIP	(11) ILLUS-TRATION	
					(A) 1-5	(B) 6-20	(C) 21-50	(D) 51-100	(A) 1-20	(B) 21-50	(C) 51-100	(A) 1-20	(B) 21-50	(C) 51-00			(A) FIG NO.	(B) ITEM NO.
		2006 - MOLDBOARD TILT ARMS, AND RELATED ITEMS -Continued																
P-O		NAME PLATE: (7383714)	ea	1	*	*	*	*	*	*	*	*	*	*	5	*	D-28	8
P-O		PIN ASSEMBLY: (7705177)	ea	2	*	*	*	*	*	*	1	*	*	1	10	60	D-28	13
P-O	5305-042-8724	SCREW: left and right tilt arm to moldboard (2) moldboard cylinder and ram arm lock to push beam (2) (96906-35292-163)	ea	4	*	*	*	*	*	*	1	*	*	1	10	20	D-28	14
P-O	5310-013-8502	WASHER, LOCK: (96906-35335-25)	ea	2	*	*	*	*	*	*	1	*	*	1	10	100	D-28	15
P-O	2520-732-3827	LOCK: (7323827)	ea	2	*	*	*	*	*	*	1	*	*	1	12	200	D-28	16
P-O	5315-770-5175	PIN: left and right tilt arm to moldboard (7705175)	ea	2	*	*	*	*	*	*	1	*	*	1	10	50	D-28	19
		NON-ILLUSTRATED ITEMS																
P-O	5315-019-3244	PIN, COTTER: moldboard pin to outer and inner tilt arm (193244)	ea	4	*	*	*	*	*	*	1	*	*	1	10	50	D-28	-
P-O	5310-012-2901	NUT, SLOTTED, HEXAGON: left and right moldboard tilt arms (122901)	ea	4	*	*	*	*	*	*	1	*	*	1	10	50	D-28	-
P-O	5315-732-3277	PIN ASSEMBLY: moldboard tilt arm to bracket left and right (7323277)	ea	2	*	*	*	*	*	*	1	*	*	1	6	20	D-28	-
		2006 - PUSH BEAMS AND RELATED ITEMS																
P-O	5315-732-3289	PIN ASSEMBLY: push beam to moldboard (7323289)	ea	4	*	*	*	*	*	*	1	*	*	1	14	50	D-29	2
P-O	5315-316-0884	PIN: moldboard push beam (7359964)	ea	2	*	*	*	*	*	*	1	*	*	1	10	50	D-29	3
P-O	2520-732-3827	LOCK: (7323827)	ea	2	*	*	*	*	*	*	1	*	*	1	10	100	D-29	4
P-O	5315-732-3820	PIN ASSEMBLY: moldboard push beam to bracket (7323820)	ea	2	*	*	*	*	*	*	1	*	*	1	10	20	D-29	7

E-49. REPAIR PARTS LIST (PECULIAR TO EARLY MODEL BULLDOZER)

(1) SMR CODE	(2) FEDERAL STOCK NO.	(3) DESCRIPTION	(4) UNIT OF MEAS-URE	(5) QTY. INC. IN UNIT	(6) ORGANIZATIONAL 15 DAY MAINT. ALLOWANCE				(7) DIRECT SUPPORT 30-DAY MAINT. ALLOWANCE			(8) GENERAL SUPPORT 30-DAY MAINT. ALLOWANCE			(9) 1 YR. ALW. PER 100 EQUIP/ CNTGCY PLAN-NING	(10) DEPOT MAINT. ALW PER 100 EQUIP	(11) ILLUS-TRATION	
					(A) 1-5	(B) 6-20	(C) 21-50	(D) 51-100	(A) 1-20	(B) 21-50	(C) 51-100	(A) 1-20	(B) 21-50	(C) 51-00			(A) FIG NO.	(B) ITEM NO.
		2006 - CLUTCH CONTROL AND RELATED PARTS																
P-O	4730-542-3268	CLAMP: boot to clutch (96906-35842-1)	ea	2	*	*	*	*	*	*	1	*	*	1	8	20	E-18	1
P-O		BOOT, WATERPROOF: (10887732)	ea	1	*	*	*	*	*	*	1	*	*	1	6	10	E-18	2
P-O	2590-884-1888	HANDLE: clutch control cable (10911902)	ea	1	*	*	*	*	*	*	1	*	*	1	6	10	E-19	1
P-O	5310-827-8486	NUT, PLAIN, HEXAGON: (96906-35691-728)	ea	6	*	*	*	*	*	*	1	*	*	1	14	60	E-19	2
P-O	5340-696-4259	PLUNGER: clutch control handle rode (7064418)	ea	2	*	*	*	*	*	*	1	*	*	1	8	20	E-19	3
X20		HOUSING: (10883676)	ea	1	*	*	*	*	*	*	*	*	*	*	0	0	E-19	4
P-O		ROD: control cable handle (10883672)	ea	1	*	*	*	*	*	*	1	*	*	1	6	10	E-19	5
P-O	5330-198-6163	GASKET: control rod housing (501225)	ea	1	*	*	*	*	*	*	1	*	*	1	12	100	E-19	6
P-O		GASKET: control rod housing (10883675)	ea	1	*	*	*	*	*	*	1	*	*	1	12	100	E-19	7
P-O		NUT, PLAIN, HEXAGON: (96906-35691-2028)	ea	1	*	*	*	*	*	*	1	*	*	1	6	10	E-19	8
P-O	5310-822-1179	NUT, PLAIN, HEXAGON: (96906-35691-428)	ea	1	*	*	*	*	*	*	1	*	*	1	6	10	E-19	9
P-O		GASKET: rubber (10883675)	ea	1	*	*	*	*	*	*	1	*	*	1	6	100	E-19	10
P-O	5310-655-7149	WASHER, FLAT: (96906-15795-216)	ea	1	*	*	*	*	*	*	1	*	*	1	6	10	E-19	11
X20		BRACKET: (10887683)	ea	1	*	*	*	*	*	*	*	*	*	*	0	0	E-19	12
P-O	2340-984-8540	CLAMP: (96906-21333-102)	ea	2	*	*	*	*	*	*	1	*	*	1	6	20	E-19	13
P-O	5305-543-5963	SCREW, CAP, HEXAGON HEAD: (96906-35291-56)	ea	2	*	*	*	*	*	*	1	*	*	1	6	20	E-19	14
P-O	5310-012-0381	WASHER, LOCK: (96906-35337-27)	ea	2	*	*	*	*	*	*	1	*	*	1	12	20	E-19	15
P-O	5305-721-3241	SCREW, CAP, HEXAGON HEAD: (96906-35292-1)	ea	1	*	*	*	*	*	*	1	*	*	1	6	10	E-19	16

E-49. REPAIR PARTS LIST (PECULIAR TO EARLY MODEL BULLDOZER)

(1) SMR CODE	(2) FEDERAL STOCK NO.	(3) DESCRIPTION	(4) UNIT OF MEAS-URE	(5) QTY. INC. IN UNIT	(6) ORGANIZATIONAL 15 DAY MAINT. ALLOWANCE				(7) DIRECT SUPPORT 30-DAY MAINT. ALLOWANCE			(8) GENERAL SUPPORT 30-DAY MAINT. ALLOWANCE			(9) 1 YR. ALW. PER 100 EQUIP/ CNTGCY PLAN-NING	(10) DEPOT MAINT. ALW PER 100 EQUIP	(11) ILLUS-TRATION	
					(A) 1-5	(B) 6-20	(C) 21-50	(D) 51-100	(A) 1-20	(B) 21-50	(C) 51-100	(A) 1-20	(B) 21-50	(C) 51-00			(A) FIG NO.	(B) ITEM NO.
		2006 - CLUTCH CONTROL AND RELATED PARTS -Continued																
P-O	5310-607-3693	WASHER, LOCK: (96906-35337-25)	ea	1	*	*	*	*	*	*	1	*	*	1	6	10	E-19	17
X20		BRACKET: (10883773)	ea	1	*	*	*	*	*	*	1	*	*	1	0	0	E-19	18
P-O	5310-551-5897	WASHER, LOCK: (7064833)	ea	1	*	*	*	*	*	*	1	*	*	1	6	10	E-19	19
P-O	5305-721-8152	SCREW, CAP, HEXAGON HEAD: (96906-35304-65)	ea	1	*	*	*	*	*	*	1	*	*	1	6	10	E-19	20
X20		CLAMP: (7384968)	ea	2	*	*	*	*	*	*	*	*	*	*	0	0	E-19	21
P-O	2590-806-1126	CABLE ASSEMBLY: clutch control (7339977)	ea	1	*	*	*	*	*	*	1	*	*	1	6	10	E-19	22
P-O	5310-261-7340	WASHER, LOCK: (96906-35338-8)	ea	1	*	*	*	*	*	*	1	*	*	1	6	10	E-19	23
P-O	5310-010-3026	NUT, PLAIN, HEXAGON: (96906-35690-624)	ea	1	*	*	*	*	*	*	1	*	*	1	6	10	E-19	24
P-O	5310-012-0613	NUT, PLAIN, HEXAGON: (96906-35691-422)	ea	1	*	*	*	*	*	*	1	*	*	1	6	10	E-19	25
P-O	5315-011-2726	PIN, COTTER: (112726)	ea	1	*	*	*	*	*	*	1	*	*	1	14	100	E-19	26
P-O	5340-550-8087	CLEVIS ROD END: (116383)	ea	1	*	*	*	*	*	*	1	*	*	1	6	10	E-19	27
P-O	5315-013-8083	PIN, STRAIGHT, HEADED: (138083)	ea	1	*	*	*	*	*	*	1	*	*	1	6	10	E-19	28
P10	5306-531-1798	BOLT: (96906-35297-34)	ea	1	*	*	*	*	*	*	1	*	*	1	6	10	E-19	29
P10	5310-012-0379	WASHER, LOCK: (96906-35337-26)	ea	2	*	*	*	*	*	*	1	*	*	1	12	20	E-19	30
X20		BRACKET: (10863555)	ea	1	*	*	*	*	*	*	*	*	*	*	0	0	E-19	31
P10	5306-551-5893	BOLT: (96906-35297-38)	ea	1	*	*	*	*	*	*	1	*	*	1	6	10	E-19	32
P10	2590-678-7853	BEARING, PLAIN, ROD END: clutch control cable (10863768)	ea	1	*	*	*	*	*	*	1	*	*	1	6	10	E-19	33

E-49. REPAIR PARTS LIST (PECULIAR TO EARLY MODEL BULLDOZER)

(1) SMR CODE	(2) FEDERAL STOCK NO.	(3) DESCRIPTION	(4) UNIT OF MEAS-URE	(5) QTY. INC. IN UNIT	(6) ORGANIZATIONAL 15 DAY MAINT. ALLOWANCE				(7) DIRECT SUPPORT 30-DAY MAINT. ALLOWANCE			(8) GENERAL SUPPORT 30-DAY MAINT. ALLOWANCE			(9) 1 YR. ALW. PER 100 EQUIP/ CNTGCY PLAN-NING	(10) DEPOT MAINT. ALW PER 100 EQUIP	(11) ILLUS-TRATION	
					(A) 1-5	(B) 6-20	(C) 21-50	(D) 51-100	(A) 1-20	(B) 21-50	(C) 51-100	(A) 1-20	(B) 21-50	(C) 51-00			(A) FIG NO.	(B) ITEM NO.
		2006 - CLUTCH CONTROL AND RELATED PARTS -Continued																
P10	5315-597-7745	PIN, COTTER: yoke to bracket support bolt and nut (590155)	ea	1	*	*	*	*	*	*	1	*	*	1	14	100	E-19	34
P10	5310-543-5971	NUT, SLOTTED, HEXAGON: yoke to bracket (96906-35692-522)	ea	1	*	*	*	*	*	*	1	*	*	1	6	10	E-19	35
P10	5310-227-6566	WASHER, FLAT: (96906-15795-212)	ea	1	*	*	*	*	*	*	1	*	*	1	6	10	E-19	36
P20		YOKE: (7699980)	ea	1	*	*	*	*	*	*	*	*	*	*	5	*	E-19	37
P-O	5306-653-9540	BOLT, SHOULDER: yoke to bracket (7699987)	ea	1	*	*	*	*	*	*	1	*	*	1	6	10	E-19	38
		2006 - HYDRAULIC PUMP AND MOUNT ASSEMBLY, SPROCKET ASSEMBLY AND RELATED PARTS																
P-O	5305-543-2273	SCREW: (96906-35298-114)	ea	6	*	*	*	*	*	*	1	*	*	1	14	150	E-20	1
P-O	5310-012-0239	WASHER, LOCK: (96906-35337-29)	ea	6	*	*	*	*	*	*	1	*	*	1	14	200	E-20	2
X20		BRACKET: (7699997)	ea	1	*	*	*	*	*	*	*	*	*	*	0	0	E-20	3
X20		SPACER: (7699813)	ea	4	*	*	*	*	*	*	*	*	*	*	0	0	E-20	4
X20		MOUNT ASSEMBLY: (7383915)	ea	1	*	*	*	*	*	*	*	*	*	*	0	0	E-20	5
P-O	5310-637-8368	WASHER: (96906-15795-218)	ea	2	*	*	*	*	*	*	1	*	*	1	10	40	E-20	6
P-O	5305-018-1675	SCREW: mount to transmission rear housing and cover (96906-35298-92)	ea	5	*	*	*	*	*	*	1	*	*	1	14	200	E-20	7
P-O	5310-655-7149	WASHER, LOCK: mount to transmission rear housing cover (96906-35337-28)	ea	5	*	*	*	*	*	*	1	*	*	1	14	100	E-20	8
P-O	5310-655-7149	WASHER, FLAT: mount to transmission rear housing and cover (96906-15795-216)	ea	5	*	*	*	*	*	*	1	*	*	1	14	100	E-20	9

(1) SMR CODE	(2) FEDERAL STOCK NO.	(3) DESCRIPTION	(4) UNIT OF MEAS-URE	(5) QTY. INC. IN UNIT	(6) ORGANIZATIONAL 15 DAY MAINT. ALLOWANCE				(7) DIRECT SUPPORT 30-DAY MAINT. ALLOWANCE			(8) GENERAL SUPPORT 30-DAY MAINT. ALLOWANCE			(9) 1 YR. ALW. PER 100 EQUIP/ CNTGCY PLAN-NING	(10) DEPOT MAINT. ALW PER 100 EQUIP	(11) ILLUS-TRATION	
					(A) 1-5	(B) 6-20	(C) 21-50	(D) 51-100	(A) 1-20	(B) 21-50	(C) 51-100	(A) 1-20	(B) 21-50	(C) 51-00			(A) FIG NO.	(B) ITEM NO.
		2006 - HYDRAULIC PUMP AND MOUNT ASSEMBLY, SPROCKET ASSEMBLY AND RELATED PARTS --Continued																
P-O	5330-653-9543	GASKET: transmission cover mount seal (7699926)	ea	2	*	*	*	*	*	*	1	*	*	1	12	200	E-20	10
X20		RING: (7699932)	ea	1	*	*	*	*	*	*	*	*	*	*	0	0	E-20	11
P-O		SCREW: (96906-35297-35)	ea	2	*	*	*	*	*	*	1	*	*	1	10	100	E-21	1
P-O	5310-012-0379	WASHER, LOCK: (96906-35337-26)	ea	2	*	*	*	*	*	*	1	*	*	1	10	100	E-21	2
P-O	5330-653-9546	GASKET: right angle drive mount (7383694)	ea	1	*	*	*	*	*	*	1	*	*	1	10	100	E-21	3
P-O	5340-200-4185	INSERT: right angle drive mounting screw (8386415)	ea	2	*	*	*	*	*	*	1	*	*	1	10	40	E-21	4
X20		MOUNT: (7699961)	ea	1	*	*	*	*	*	*	*	*	*	*	0	0	E-21	5
P-O	5340-670-7614	INSERT: hydraulic pump mounting screw (8386422)	ea	4	*	*	*	*	*	*	1	*	*	1	14	80	E-21	6
P-O	5305-639-8194	SCREW, MACHINE: (96906-35239-90)	ea	2	*	*	*	*	*	*	1	*	*	1	10	50	E-21	7
P-O	5310-639-8216	WASHER, LOCK: (96906-35336-26)	ea	2	*	*	*	*	*	*	1	*	*	1	10	100	E-21	8
X20		KEY: (7383719)	ea	1	*	*	*	*	*	*	*	*	*	*	0	0	E-21	9
P-O	5305-018-0125	SCREW, CAP, HEXAGON HEAD: (96906-35297-63)	ea	4	*	*	*	*	*	*	1	*	*	1	14	80	E-21	10
P-O	5310-012-0381	WASHER, LOCK: (96906-35337-27)	ea	4	*	*	*	*	*	*	1	*	*	1	14	50	E-21	11
P-OR	2520-653-9221	PUMP ASSEMBLY: hydraulic (7049999)	ea	1	*	*	*	2	*	2	2	*	2	2	6	10	E-21	12
P-F	2520-653-9218	SHAFT: clutch hydraulic pump (7699893)	ea	1					*	*	1	*	*	1	6	10	E-21	13
P-O	2520-653-9216	CLUTCH ASSEMBLY: hydraulic pump (7049996)	ea	1	*	*	*	2	*	2	2	*	2	2	6	10	E-21	14
P-O	3110-114-5987	BEARING, BALL, ANNULAR: clutch right angle drive cup shaft (7331622)	ea	1	*	*	*	*	*	*	1	*	*	1	6	10	E-21	15

E-49. REPAIR PARTS LIST (PECULIAR TO EARLY MODEL BULLDOZER)

(1) SMR CODE	(2) FEDERAL STOCK NO.	(3) DESCRIPTION	(4) UNIT OF MEASURE	(5) QTY INC. IN UNIT	(6) ORGANIZATIONAL 15 DAY MAINT. ALLOWANCE				(7) DIRECT SUPPORT 30-DAY MAINT. ALLOWANCE			(8) GENERAL SUPPORT 30 DAY MAINT. ALLOWANCE			(9) 1 YR. ALW. PER 100 EQUIP/ CTNGCY PLAN-NING	(10) DEPOT MAINT. ALW. PER 100 EQUIP	(11) ILLUS-TRATION	
					(A) 1-5	(B) 6-20	(C) 21-50	(D) 51-100	(A) 1-20	(B) 21-50	(C) 51-100	(A) 1-20	(B) 21-50	C) 21-100			(A) FIG NO.	(B) ITEM NO.
		2006 HYDRAULIC PUMP AND MOUNT ASSEMBLY, SPROCKET ASSEMBLY AND RELATED PARTS-Continued																
P-F	2520-653-9217	CLUTCH, HALF. POSITIVE: right angle drive (7699942)	ea	1					*	*	1	*	*	1	6	10	E-21	16
P-O	3110-277-0423	BEARING: clutch right drive (7331621)	ea	1	*	*	*	*	*	*	1	*	*	1	6	10	E-21	17
P-F	5310-653-9542	NUT: cup clutch adjusting plain, knurled (7383690)	ea	1					*	*	1	*	*	1	6	10	E-21	18
P-F	5310-653-9539	NUT: lock cup clutch adjusting nut (7383691)	ea	1					*	*	1	*	*	1	6	10	E-21	19
P-OR	2520-653-9219	POWER TAKE-OFF: right angle drive (7383718)	ea	1	*	*	*	2	*	2	2	*	2	2	2	5	E-21	20
		NON-ILLUSTRATED ITEMS																
P-F	2590-653-9222	CONTROL ASSEMBLY: push-pull clutch (7044035)	ea	1					*	*	1	*	*	1	6	20	E-21	
P-O	5340-543-4097	INSERT: hydraulic pump mounting screws (452696)	ea	4	*	*	*	*	*	*	1	*	*	1	6	100	E-21	
		2006 - CLUTCH ASSEMBLY																
X1F		SLEEVE: (98906-PM.402)	ea	1													E-21	1
P-F	5315-708-2935	PIN, STRAIGHT, HEADLESS: clutch assembly (10870570)	ea	1					*	*	1	*	*	1	6	10	E-22	2
XIF		CLUTCH BODY: (98906-PM-415)	ea	1													E-22	3
P-F	2590-707-1227	DOG: clutch assembly (8395421)	ea	3					*	*	1	*	*	1	6	10	E-22	4
P-F	5310-708-2934	HI-PRO-KEY: clutch assembly (8395420)	ea	3					*	*	1	*	*	1	6	10	E-22	5
P-F		SPLIT RING: (98906PM-408)	ea	1					*	*	1	*	*	1	6	10	E-22	6
P-F	2590-707-1231	ADJUSTMENT LOCK SPRING: clutch assembly (8395426)	ea	1					*	*	1	*	*	1	6	10	E-22	7
P-F	2590-707-1230	PRESSURE PLATE: clutch assembly (8395425)	ea	1					*	*	1	*	*	1	6	10	E-22	8

E-49. REPAIR PARTS LIST (PECULIAR TO EARLY MODEL BULLDOZER)

(1) SMR CODE	(2) FEDERAL STOCK NO.	(3) DESCRIPTION	(4) UNIT OF MEASURE	(5) QTY INC. IN UNIT	(6) ORGANIZATIONAL 15 DAY MAINT. ALLOWANCE				(7) DIRECT SUPPORT 30-DAY MAINT. ALLOWANCE			(8) GENERAL SUPPORT 30 DAY MAINT. ALLOWANCE			(9) 1 YR. ALW. PER 100 EQUIP/ CTNGCY PLAN-NING	(10) DEPOT MAINT. ALW. PER 100 EQUIP	(11) ILLUS-TRATION	
					(A) 1-5	(B) 6-20	(C) 21-50	(D) 51-100	(A) 1-20	(B) 21-50	(C) 51-100	(A) 1-20	(B) 21-50	C) 21-100			(A) FIG NO.	(B) ITEM NO.
		2006 - CLUTCH ASSEMBLY -Continued																
P-F	2590-707-1226	ADJUSTMENT COLLAR: clutch assembly (8395423)	ea	1					*	*	1	*	*	1	6	10	E-22	9
P-F	1015-629-4858	THRUST PLATE: clutch assembly (8395424)	ea	1					*	*	1	*	*	1	6	10	E-22	10
P-F	3110-540-5869	DISK: inner clutch assembly (8395422)	ea	9					*	2	2	*	2	2	6	10	E-22	11
P-F	2590-707-1232	DISK: outer clutch assembly (8395427)	ea	10					*	2	2	*	2	2	6	10	F-22	12

E-50. SPECIAL TOOLS AND EQUIPMENT (PECULIAR TO EARLY MODEL BULLDOZER)

(1) SMR CODE	(2) FEDERAL STOCK NO.	(3) DESCRIPTION	(4) UNIT OF MEASURE	(5) QTY INC. IN UNIT	(6) ORGANIZATIONAL 15 DAY MAINT. ALLOWANCE				(7) DIRECT SUPPORT 30-DAY MAINT. ALLOWANCE			(8) GENERAL SUPPORT 30 DAY MAINT. ALLOWANCE			(9) 1 YR. ALW. PER 100 EQUIP/ CTNGCY PLAN-NING	(10) DEPOT MAINT. ALW. PER 100 EQUIP	(11) ILLUS-TRATION	
					(A) 1-5	(B) 6-20	(C) 21-50	(D) 51-100	(A) 1-20	(B) 21-50	(C) 51-100	(A) 1-20	(B) 21-50	C) 21-100			(A) FIG NO.	(B) ITEM NO.
P-O		TOOL, CLUTCH ADJUSTING: (carried in vehicle tool bag (7953545)	ea	1	*	2	2	2	2	2	2	2	2	3	6	*	E-6	

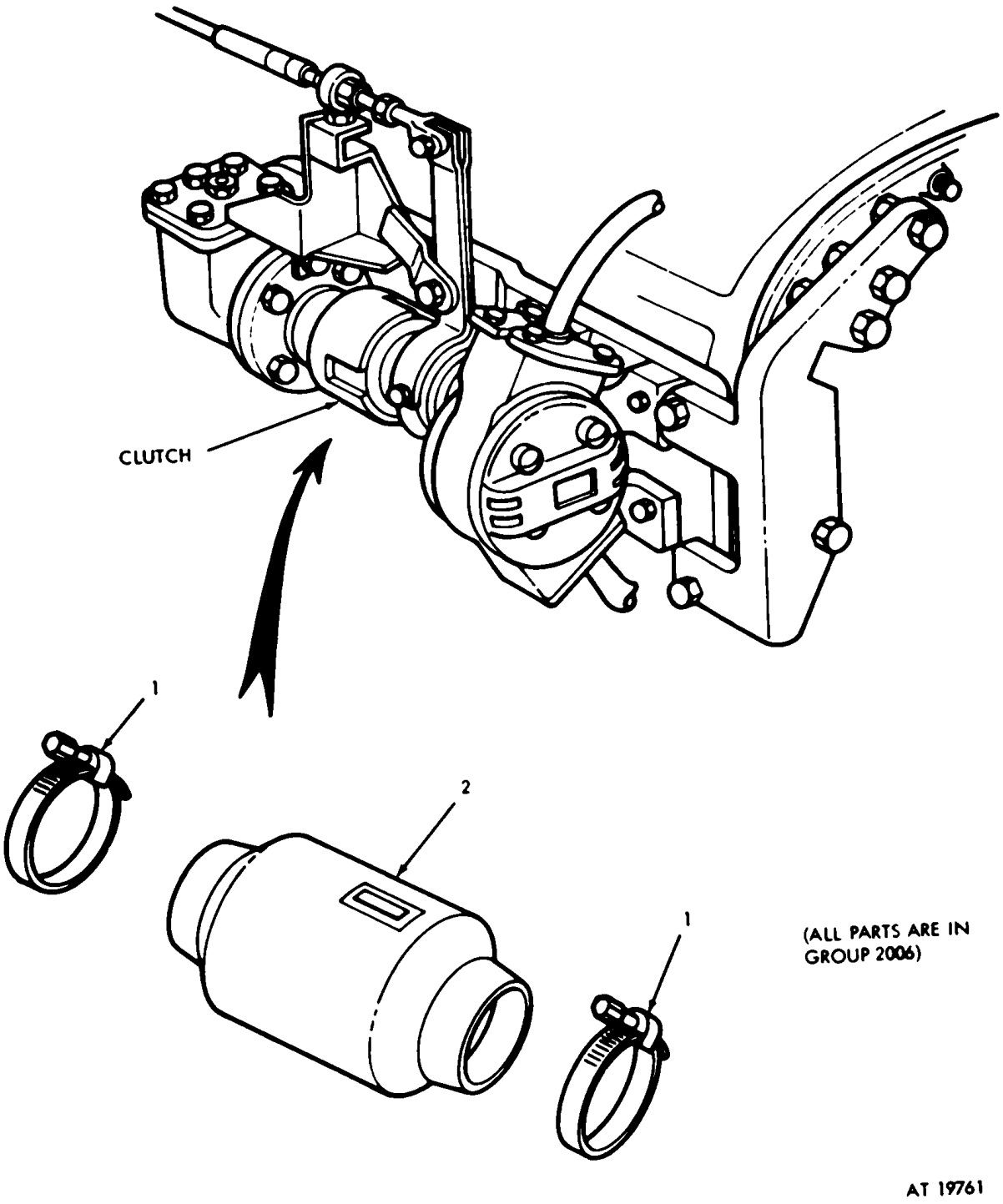

Figure E-18. Clutch control and related parts - exploded view (sheet 1 of 2).

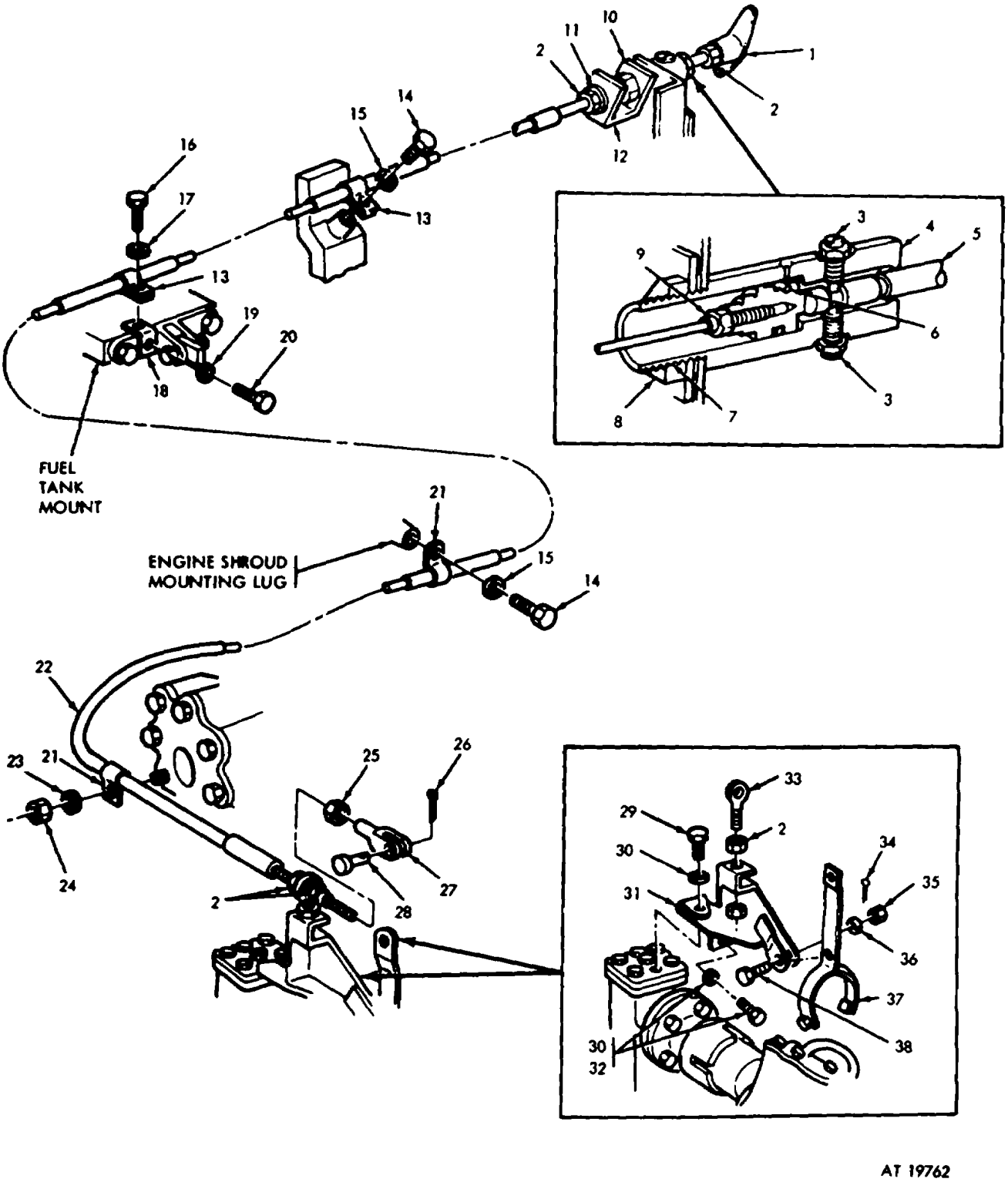

Figure E-19. Clutch control and related parts - exploded view (sheet 2 of 2).

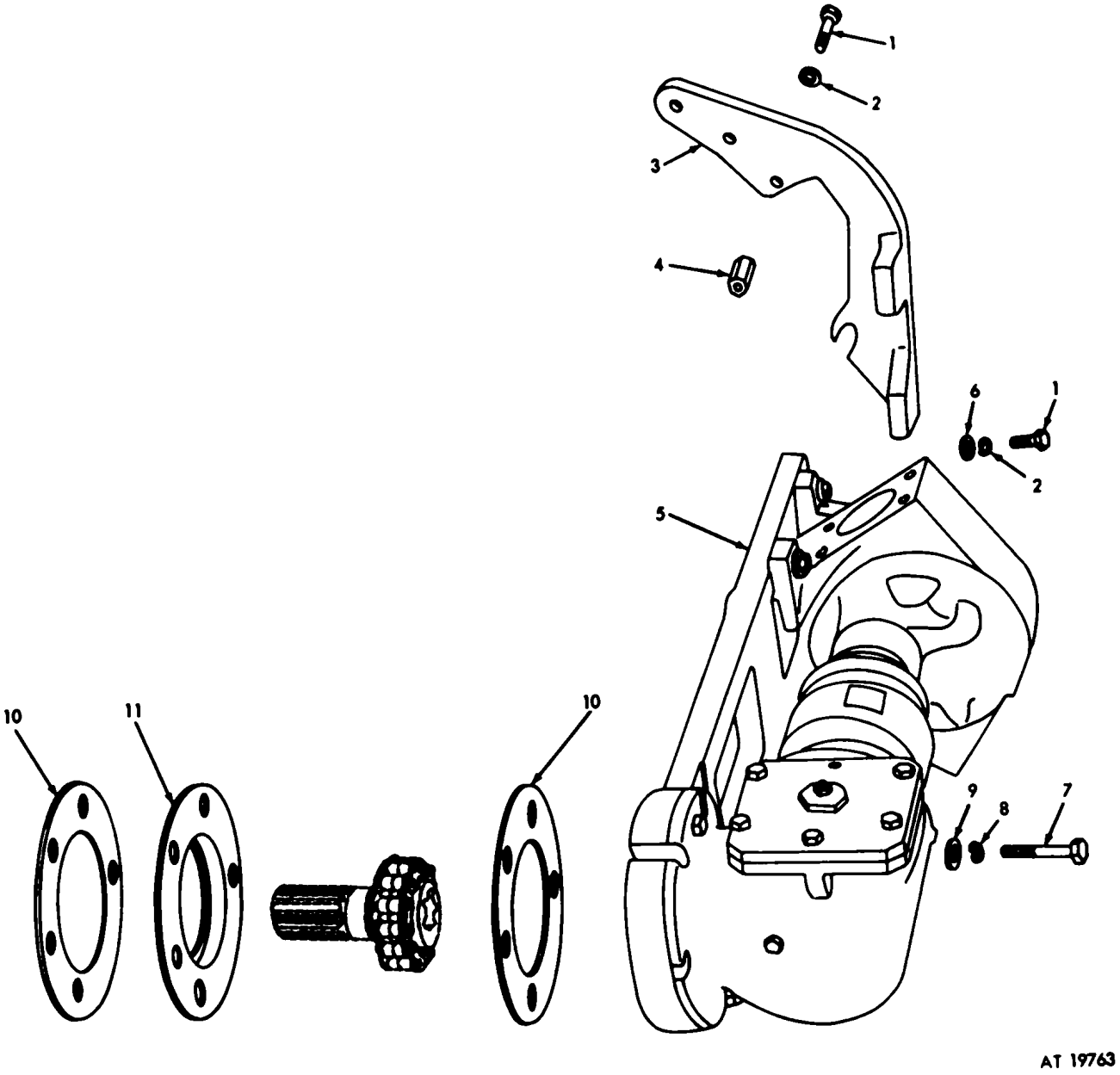

Figure E-20. Hydraulic pump and mount assembly, sprocket assembly and related parts - partial exploded view.

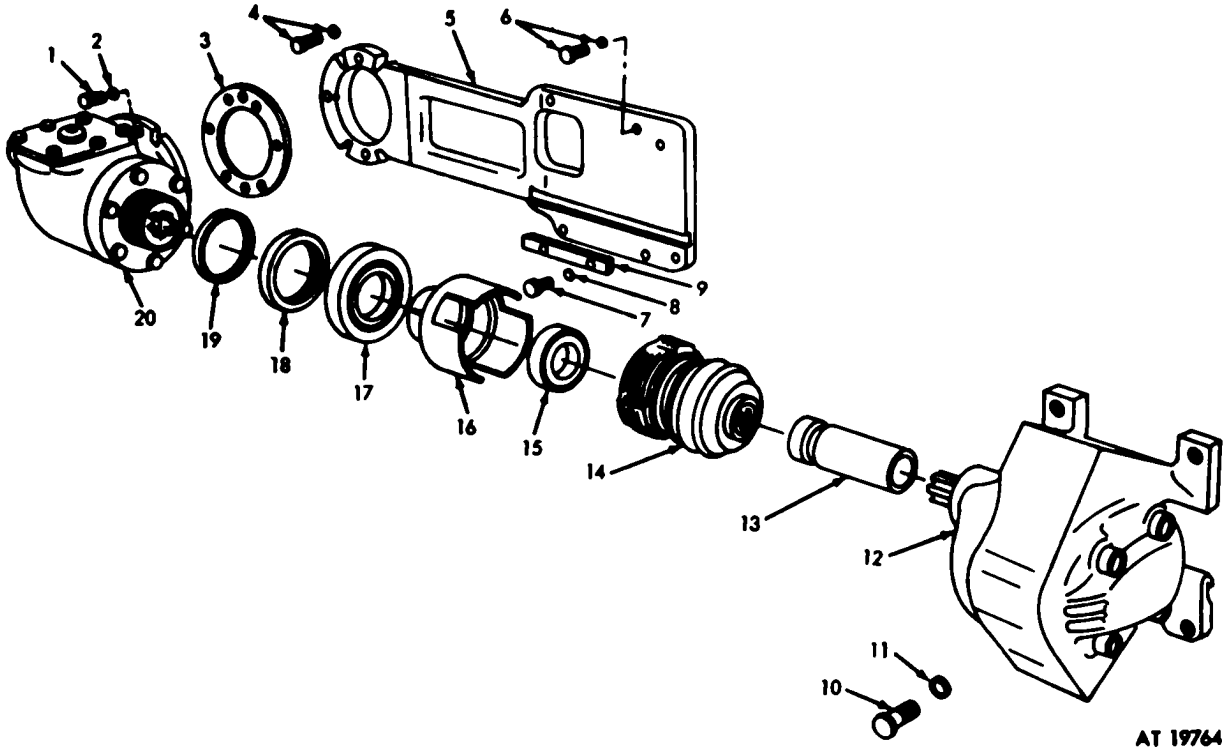

Figure E-21. . Hydraulic pump and mount assembly - partially exploded view

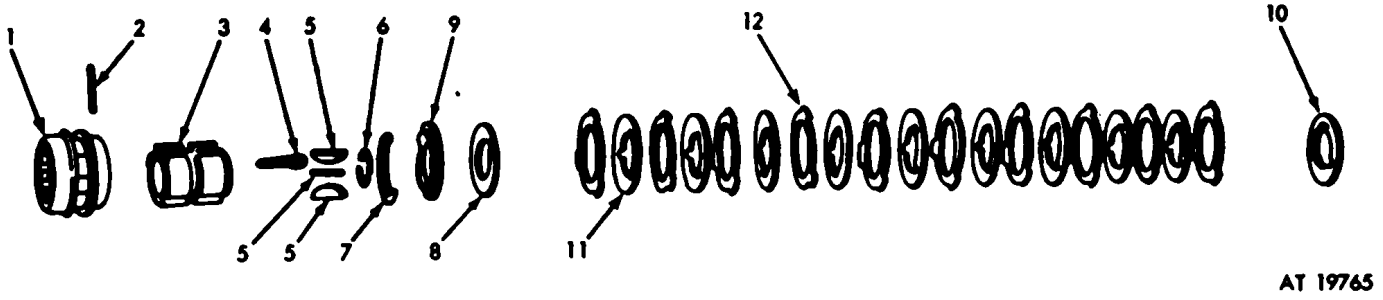

Figure E-22. Clutch assembly - exploded view.

E-51. Indexes (Peculiar to Early Model Bulldozer).
Federal Stock Number to Part Number Index

FEDERAL STOCK NUMBER	PART NUMBER	FIGURE NO.	ITEM NO.
1015-629-4858	8395424	E-22	10
2340-984-8540	96906-21333-102	E-19	13
2520-726-1633	7261633	D-23	20
2520-726-1634	7261634	D-23	19
2520-732-3827	7323827	D-28	16
2520-732-3827	7323837	D-29	4
2520-653-9211	7383939	D-13	10
2520-653-9216	7049996	E-21	14
2520-653-9217	7699942	F-21	16
2520-653-9218	7699893	E-21	13
2520-653-9219	7383718	E-21	20
2520-653-9221	7049999	E-21	12
2520-564-5485	8686923	D-23	13
2520-564-5487	8668924	D-23	7
2520-564-5489	8668925	D-23	14
2520-564-5492	8686926	D-23	5
2520-569-9634	8744722	D-23	3
2520-569-9640	8744754	D-23	16
2590-653-9222	7044035	E-21	-
2590-656-3610	7699923	D-22	32
2590-659-2346	7044032	D-23	17
2590-661-1693	7044033	D-23	1
2590-678-7853	10863768	E-19	33
2590-690-1150	8762603	D-27	22
2590-707-1226	8395423	D-22	9
2590-707-1227	8395421	E-22	4
2590-707-1230	8395425	E.22	8
2590-707-1231	8395426	E-22	7
2590-707-1232	8395427	E-22	12
2590-806-1126	7339977	E-19	22
2590-884-1888	10911902	E-19	1
3110-114-5987	7331622	E-21	15
3110-227-0423	7331621	E-21	17
3110-540-5869	8395422	E-22	11
4730-277-9190	8338705	D-22	1
4730-278-3389	219190	D-13	25
4730-278-6344	502393	D-13	24
4730-289-1556	8693918	D-26	-
4730-330-0111	7389290	D-13	17
4730-330-0111	7389290	D-26	1
4730-350-9790	423045	D-22	12
4730-542-3268	96906-35842-1	F-18	1
4730-569-9647	8735785	D-23	6
4730-569-9649	8735784	D-23	2
4730-569-9654	8713679	D-23	4
4730-595-1885	8693856	D-26	-
4730-653-9537	7699830	D-31	18
4730-657-1497	7054149	D-22	14
5303-018-0125	96906-35297-63	F-21	10
5305-018-1675	96906-35298-92	E-20	7
5305-042-8724	96906-35292-163	D-28	14
5305-543-2273	96906-35298-114	F-20	1
5305-543-5963	96906-35201-56	E-19	14
5305-639-8194	96906-35239-90	E-21	7
5305-721-3241	96906-35292-1	E-19	16
5305-721-8152	9690635304-65	E-19	20
5306-531-1798	96906-35297-34	E-19	29
5306-551-5893	96906-35297-38	E-19	32
5306-653-9540	7699987	E-19	38
5310-010-3026	96906-35690-624	E-19	24
5310-012-0239	96906-35337-29	E-20	2
5310-012-0379	96906-35337-26	E-21	2
5310-012-0379	96906-35337-26	E-19	30
5310-012-0381	96906-35337-27	E-21	11
5310-012-0381	96906-35337-27	E-19	15
5310-012-0613	96906-35691-422	E-19	25
5310-012-2901	122901	D-28	-
5310-013-8502	96906-35335-25	D-28	15
5310-027-8486	96906-35691-728	E-19	2
5310-227-6566	96906-15796-212	E-19	36
5310-261-7340	96906-35338-8	E-19	23
5310-274-9352	126032	D-28	6
5310-516-5070	5165070	D-27	15
5310-551-5897	7064833	E-19	19
5310-543-5971	96906-35692-522	E-19	35
5310-607-3693	96906-35337-25	E-19	17
5310-637-8368	96906-15795-218	E-20	6
5310-639-8216	96906-35336-26	E-21	8
5310-653-9539	7383691	E-21	19
5310-653-9542	7383690	E-21	18
5310-655-7149	96906-15795-216	E-19	11
5310-655-7149	96906-15795-216	E-20	9
5310-655-7149	96906-35337-28	E-20	8
5310-708-2934	8395420	E-22	5
5310-822-1179	96906-35691-428	E-19	9
5315-011-2726	112726	E-19	26
5315-013-8083	138083	E-19	28
5315-019-3244	193244	D-28	-
5315-316-0884	7359964	D-29	3
5315-597-7745	590155	E-19	34
5315-708-2935	10870570	E-22	2
5315-732-3277	7323277	D-28	-
5315-732-3289	7323289	D-29	2
5315-732-3820	7323820	D-29	7
5315-770-5175	7705175	D-28	19
5330-054-6860	546860	D-26	-
5330-141-2418	7064688	D-26	-
5330-194-3720	546868	D-22	13
5330-198-6163	501225	E-19	6
5330-198-6190	501236	D-22	47
5330-256-0189	546861	D-22	49
5330-542-0981	150192	D-13	19
5330-543-6816	501236	D-26	-
5330-653-9543	7699926	E-20	10
5330-653-9546	7383694	E-21	3
5340-200-4185	8386415	E-21	4

E-51. Indexes (Peculiar to Early Model Bulldozer).
Federal Stock Number to Part Number Index

FEDERAL STOCK NUMBER	PART NUMBER	FIGURE NO.	ITEM NO.	FEDERAL STOCK NUMBER	PART NUMBER	FIGURE NO.	ITEM NO.
5340-321-6146	8693923	D-26	-	5340-670-7614	838622	E-21	6
5340-543-4097	452696	E-21	-	5340-696-4259	7064418	E-19	3
5340-550-8087	116383	E-19	27				

E-51. Indexes (Peculiar to Early Model Bulldozer).
Federal Stock Number to Part Number Index

FEDERAL STOCK NUMBER	PART NUMBER	FIGURE NO.	ITEM NO.
10863555	-	E-19	31
10863768	2590-678-7853	E-19	33
10870570	5315-708-2935	E-22	2
10873018	-	D-18	2
10883659	-	D-22	50
10883672	-	D-19	5
10883675	-	E-19	7
10883675	-	E-19	10
10883676	-	E-19	4
10883773	-	E-19	18
10887683	-	E-19	12
10887732	-	E-18	2
10911902	2590-884-1888	E-19	1
10944866	-	D-22	2
10944867	-	D-22	3
10944870	-	D-22	10
10944872	-	D-22	46
10944875	-	D-22	48
10944877	-	D-22	53
10944881	-	D-22	37
10944882	-	D-22	34
10944885	-	D-22	33
10944887	-	D-22	17
10944888	-	D-22	21
10944889	-	D-22	23
10944893	-	D-22	11
10944895	-	D-19	1
10944904	-	D-12	6
10944905	-	D-20	1
10944909	-	D-21	4
10944910	-	D-21	5
112726	5315-011-2726	E-19	26
116383	5340-550-8087	E-19	27
122901	5310-012-901	E-28	-
126032	5310-274-9352	D-28	6
138083	5315-013-8083	E-19	28
150192	5330-542-0981	D-13	19
193244	5315-019-3244	D-28	-
219190	4730-278-3389	D-13	25
423045	4730-350-9790	D-22	12
423046	-	D-22	4
452696	5340-543-4097	E-21	-
501225	5330-198-6163	E-19	6
501236	5330-198-6190	D-22	47
501236	5330-198-6190	D-26	-
502393	4730-278-6344	D-13	24
546860	5330-054-6860	D-26	-
546861	5330-256-0186	D-22	49
546868	5330-194-3730	D-22	13
590155	5315-597-7745	E-19	34
5165070	5310-516-5070	D-27	15
7044032	2590-659-2346	D-23	17
7044033	2590-661-1693	D-23	1
7044035	2590-653-9222	E-21	
7049996	2520-653-9216	E-21	14
7049999	2520-653-9221	E-21	12
7054149	4730-657-1497	D-22	14
706418	5340-696-4259	E-19	3
7064688	5330-141-2418	D-26	-
7064833	5310-551-5897	E-19	9
7261633	2520-726-1633	D-23	20
7261634	2520-726-1634	D-23	19
7261636	-	D-25	1
7261637	-	D-25	1
7323277	5315-732-3277	D-28	-
7323289	5315-732-3289	D-29	2
7323548	-	D-25	14
7323820	5315-732-3820	D-29	7
7323827	2520-732-3827	D-28	16
7323827	2520-732-3827	D-29	4
7331621	3110-277-0423	E-21	17
7331622	3110-114-5987	E-21	15
7339977	2590-806-1126	E 19	22
7359964	5315-316-0884	D-29	3
7383690	5310-653-9542	E-21	18
7383691	5310-653-9539	E-21	19
7383694	5330-653-9546	E-21	3
7383714	-	D-28	8
7383718	2520-653-9219	E-21	20
7383719	-	E-21	9
7383811	-	D-17	7
7383812	-	D-17	8
7383915	-	D-20	5
7383939	2520-653-9211	D-13	10
7384968	-	E-19	21
7389290	4730-330-011	E-13	17
7389290	4730-330-0111	D-26	1
7699813	-	E-20	4
7699830	4730-653-9537	D-13	18
7699893	2520-653-9218	E-21	13
7699900	-	D-27	3
7699902	-	D-27	11
7699913	-	D-22	39
7699923	2590-656-3610	D-22	32
7699926	5330-653-9543	E-20	10
7699930	-	D-26	16
7699932	-	E-20	11
7699942	2520-653-9211	E-21	15
7699948	-	D-18	4
7699966	-	D-17	4
7699961	-	E-21	5
7699979	-	D-17	1
7699980	-	E-19	37
7699987	-	E-19	38
7699997	-	E-20	3
7705175	5315-770-5175	D-28	19

E-51. Indexes (Peculiar to Early Model Bulldozer).
Federal Stock Number to Part Number Index

FEDERAL STOCK NUMBER	PART NUMBER	FIGURE NO.	ITEM NO.
7705177	-	D-28	13
7953545	-	E-6	-
8338705	4730-277-9190	D-22	1
8386422	5340-670-7614	F-21	6
8395420	5310-708-2934	E-22	5
8395421	2590-707-1227	E-22	4
8395422	3110-540-5869	E-22	11
8395423	2590-707-1226	E-22	9
8395424	1015-629-4858	E-22	10
8395425	2590-707-1230	E-22	8
8395426	2590-707-1231	E-22	7
8395427	2590-707-0232	E-22	12
8668466	-	D-25	13
8668924	2520-564-5487	D-23	7
8686923	2520-564-5485	D-23	13
8686925	2520-564-5489	D-23	14
8686926	2520-564-5492	D-23	5
8693856	4730-595-1885	D-26	-
8693918	4730-289-1556	D-26	-
8693923	5340-321-6146	D-26	-
8713679	4730-569-9654	D-23	4
8735784	4730-569-9649	D-23	2
8735785	4730-569-9647	D-23	6
8744703	-	D-17	6
8744721	-	D-17	9
8744722	2520-569-9634	D-23	3
8744754	2520-569-9640	D-23	16
8762603	2590-690-1150	D-27	22
96906-15795-12	5310-227-6566	E-19	36
96906-15795-216	5310-655-7149	E-19	11
96906-15795-216	5310-655-7149	E-20	9
96906-15795-218	5310-637-8368	E-20	6
96906-21333-102	2340-984-5840	E-19	13
96906-35239-90	5305-639-8194	E-21	7
96906-35291-56	5305-543-5963	E-19	14
96906-35292-1	5305-721-3241	E-19	16
96906-35292-163	5305-042-8724	D-28	14
96906-35297-34	5306-531-1798	E-19	29
96906-35297-35	-	E-21	1
96906-35297-38	5306-551-5893	E-19	32
96906-35297-63	5305-018-0125	E-21	10
96906-35298-92	5305-018-1675	E-20	7
96906-35298-114	5305-543-2273	E-20	1
96906-35304-65	5305-721-8152	E-19	20
96906-35335-25	5310-013-8502	E-28	15
96906-35336-26	5310-639-8216	E-21	8
96906-35337-25	5310-607-3693	E-19	17
96906-35337-26	5310-012-0379	E-19	30
96906-35337-26	5310-012-0379	E-21	2
96906-35337-27	5310-012-0381	E-19	15
96906-35337-27	5310-012-0381	E-21	11
96906-35337-28	5310-655-7149	E-20	8
96906-35337-29	5310-012-0239	E-20	2
96906-35338-8	5310-261-7340	E-19	23
96906-35690-624	5310-010-3026	E-19	24
96906-35691-422	5310-012-0613	E-19	25
96906-35691-428	5310-822-1179	E-19	9
96906-35691-728	5310-027-8486	E-19	2
96906-35691-2028	-	E-19	8
96906-35692-522	5310-543-5971	E-19	35
96906-35842-1	4730-542-3268	E-18	1
98906-PM-402	-	E-22	1
98906-PM-408	-	E-22	6
98906-PM-415	-	E-22	3

INDEX

	Paragraph	Page
Abbreviations	C-4	AC-2
Abbreviations and symbols	D-6	AD-4
Administrative storage instructions	5-2	5-1
Arctic conditions	3-16	3-1
Armor guards	1-22	1-3
Bulldozer operation		
Current model	2-15	2-5
Early model	E-13	AE-3
Carring hooks	1-20	1-3
Carring hooks control	2-13	2-5
Cleaning	3-27 and 4-21	3-4 4-5
Clutch assembly and related par	E-41	AE-21
Clutch control	E-9	AE-11
Clutch control assembly	E-34	AE-14
Clutch support and yoke assembly	E-32	AE-14
Detail procedures	4-17	4-3
Destruction by demolition	5-5	5-3
Directional control valve	3-89	3-47
Drain hydraulic system	3-70	3-33
Electromagnetic clutch	4-34	4-25
Electromagnetic clutch and control	1-18	1-2
	2-11	2-3
Equipment improvement recommendation	1-14	1-1
Explanation of columns	C-2	AC-1
	D-4	AD-1
Federal supply code	C-5	AC-2
Federal supply code for manufacturers	D-7	AD-4
Field report of accidents	1-13	1-1
Farms, records, and reports	1-11	1-1
Headlight adapter assembly	4-26	4-8
Headlight adjustment	3-64	3-30
Headlight assembly	E-28	AE-14
How to locate repair parts	D-5	AD-4
Hydraulic pump assembly	4-32	4-13
Hydraulic system	1-21	1-3
Infinite and zero multiment reading	3-50	3-29
Inspection and procedures	3-21	3-2
Inspection and repair	4-23	4-6
Instructions and procedures	4-14	4-2
Lubrication instructions	3-11	3-1
Maintenance allocation chart	1-19	1-2
Maintenance function	B-3	AB-1
Moldboard	1-17	1-2
Moldboard controls	2-12	2-5
Moldboard control linkage	1-19	1-2

INDEX - Continued

	Paragraph	Page
Moldboard cylinder and ram	4-29	4-10
Multimeter method of electrical troubleshooting	3-47	3-25
Organization	3-22	3-2
Painting	3-30	3-4
Peculiar repair parts illustrations	E-44	AE-23
Power take-o assembly	E-30	AE-14
Prerequisites for testing	3-44	3-10
Prescribed load allowance (peculiar to early model bulldozer	E-48	AE-23
Preventive maintenance checks and services	E-21	AE-8
Purging hydraulic system of air	3-69	3-32
Qualification procedure		
Current model	3-42	3-10
Early model	E-25	AE-8
Receiving inspection	2-4	2-1
Recommendations for maintenance publication improvements	D-8	AD-5
Record and reports	3-14	3-1
Repair parts	3-3 and 4-9	3-1 4-1
Replacement of armor guards for cylinders and hydraulic systems	3-73	3-33
Replacement of box assembly	3-112	3-62
Replacement of brush guards	3-58	3-30
Replacement of carring hooks and shafts	3-102	3-58
Replacement of electromagnetic clutch electrical system	3-120	3-67
Replacement of emergency lifting cables	3-100	3-58
Replacement of directional control valve linkage	3-110	3-42
Replacement of headlight and adapter	3-60	3-30
Replacement of hydraulic cylinder and ram assembly	3-79	3-45
Replacement of hydraulic reservoir assembly	3-81	3-47
Replacement of hydraulic valve, ham, lines, tubes, and fittings	3-75	3-33
Replacement of moldboard assembly tilt m, and push beam	3-95	3-53
Replacement of moldboard cutting edge (blade)	3-98	3-57
Replacement of right-angle drive power take-off plugs, fittings and gasket	3-123	3-67
Reports and records	4-3	4-1
Resistance readings	3-51	3-29
Resistance test	3-9	3-25
Responsibilities and intervals	3-19	3-2
Right-angle drive	3-3	4-21
Service inspection	2-5	2-1
Service inspection	2-5	2-1
Servicing hydraulic reservoir relief fitting	3-83	3-47
Servicing of hydraulic screen assembly	3-85	3-47
Shipping instructions	5-3	5-1
Special information	C-3	AC-2
Symbols	B-5	AB-1
Tables, list of:		
Table 3-1. Daily preventive maintenance services (operator and crew)	-	3-2

	Paragraph	Page
Tables, list of: - Continued		
Table 3-2. Quarterly "Q" preventive maintenance services (organization	-	3-3
Table 3-3. Qualification procedure	-	3-6
Table 3-4. Troubleshooting	-	3-8
Table 3-5. Troubleshooting routine index	-	3-24
Table 3-6. Harness-view index	-	3-25
Table 4-1. Special tools and equipment direct support, general support and depot maintenance	-	4-2
Table 4-2. Troubleshooting moldboard assembly	-	4-4
Table 4-3. Troubleshooting cylinder and ram assembly	-	4-4
Table 4-4. Troubleshooting ram assembly	-	4-4
Table 4-5. Troubleshooting control handle box assembly	-	4-4
Table 4-6. Troubleshooting electromagnetic clutch assembly (power take-off group)	-	4-5
Table 4-7. Troubleshooting power take-of transmission assembly	-	4-5
Table 4-8. Repair and rebuild standards for moldboard cylinder and ram	-	4-12
Table 4-9. Repair and rebuild standards for hydraulic pump assembly	-	4-19
Table 4-10. Repair and rebuild standards for right angle drive power take-off	-	4-24
Table 4-11. Repair and rebuild standards for electromagnetic clutch	-	4-28
Table E-1. Special tools and equipment organization maintenance	-	AE-8
Table E-2. Daily preventive maintenance services (operator and crew)	-	AE-8
Table E-3. Qualification Procedure	-	AE-9
Table E-4. Troubleshooting	-	AE-13
Table E-5. Troubleshooting power take-off group	-	AE-21
Table E.6. Troubleshooting hydraulic pump and mount assembly	-	AE-21
Table E-7. Repair and rebuild standards for clutch assembly and related components	-	AE-22
Tools and equipment	3-6,4-11 and E-19	3-1, 4-1 AE-8
Troubleshooting	E-23 and E-39	AE-8 AE-21
Troubleshooting electrical harness and cables	3-52	3-29
Troubleshooting procedures	4-18	4-3
Troubleshooting table (malfunction approach)	3-39	3-9
Troubleshooting technique	3-37 and 4-15	3-5 4-3
Weights	1-25	1-3

By Order of the Secretary of the Army:

W. C. WESTMORELAND,
General, United Sates Army,
Chief of Staff.

Official:

KENNETH G. WICKHAM,
Major General United States Army,
The Adjutant General

DISITRIBUTION:

To be distributed in accordance with DA Form 12-37, qty rqr block No. 5) operator maintenance requirements for Bulldozer, Earth-moving, Tank Mounting M8A3.

U.S. GOVERNMENT PRINTING OFFICE: 1985 0 - 461-421 (20232)

RECOMMENDED CHANGES TO EQUIPMENT TECHNICAL PUBLICATIONS

THEN. . JOT DOWN THE DOPE ABOUT IT ON THIS FORM, CAREFULLY TEAR IT OUT, FOLD IT AND DROP IT IN THE MAIL!

SOMETHING WRONG WITH THIS PUBLICATION?

FROM: (PRINT YOUR UNIT'S COMPLETE ADDRESS)

DATE SENT

PUBLICATION NUMBER	PUBLICATION DATE	PUBLICATION TITLE

BE EXACT. . .PIN-POINT WHERE IT IS

PAGE NO.	PARA-GRAPH	FIGURE NO	TABLE NO.

IN THIS SPACE TELL WHAT IS WRONG AND WHAT SHOULD BE DONE ABOUT IT:

PRINTED NAME, GRADE OR TITLE, AND TELEPHONE NUMBER

SIGN HERE:

DA FORM 1 JUL 79 2028-2

PREVIOUS EDITIONS ARE OBSOLETE.

P.S.—IF YOUR OUTFIT WANTS TO KNOW ABOUT YOUR RECOMMENDATION MAKE A CARBON COPY OF THIS AND GIVE IT TO YOUR HEADQUARTERS.

TEAR ALONG PERFORATED LINE

PIN: 018397-001