TB 700-2
NAVSEAINST 8020.8C
TO 11A-1-47

Joint Technical Bulletin

DEPARTMENT OF DEFENSE AMMUNITION AND EXPLOSIVES HAZARD CLASSIFICATION PROCEDURES

Headquarters
Departments of the Army, the Navy,
and the Air Force
Washington, DC

30 July 2012

SUMMARY OF CHANGE

This revision of Technical Bulletin (TB) 700-2 is a complete rewrite. Significant changes include:

- Removed United Nations (UN) Test Series 5 (HD 1.5)
- Removed the Naval Ordnance Laboratory (NOL) card gap test as a universal justification for a Hazard Division (HD) 1.3 Interim Hazard Classification (IHC)
- Introduced the hazard classification methodology for HD 1.2 subdivisions (Table 2-2) including specific guidance for HD 1.2.3 (Section 5-6)
- Inserted a revised hazard classification flow diagram (Figure 5-1)
- Replaced UN Test Series 6 tests with North Atlantic Treaty Organization (NATO) Standardization Agreement (STANAG) tests (Section 5-4d and 5-5)
- NATO STANAG 4396, Sympathetic Reaction, Munition Test Procedures
- NATO STANAG 4240, Liquid Fuel/External Fire, Munition Test Procedures
- NATO STANAG 4382, Slow Heating, Munitions Test Procedures
- NATO STANAG 4241, Bullet Impact, Munition Test Procedures
- NATO STANAG 4375, Safety Drop Munition Test Procedures
- NATO STANAG 4496, Fragment Impact, Munition Test Procedures
- NATO STANAG 4439, Policy for Introduction and Assessment of Insensitive Munitions (IM)
- Implemented external means of initiation of donors during single package and sympathetic reaction testing.
- Introduced alternative card gap tests for solid propellant rocket motors (Section 5-8)

Headquarters
Departments of the Army, the Navy, and the Air Force
Washington, DC
30 July 2012

*** TB 700-2**
NAVSEAINST 8020.8C
TO 11A-1-47

Joint Technical Bulletin

Department of Defense
Ammunition and Explosives Hazard Classification Procedures

By Order of the Secretary of the Army:

RAYMOND T. ODIERNO
General, United States Army
Chief of Staff

Official:

JOYCE E. MORROW
Administrative Assistant to the
Secretary of the Army
1217406

By Order of the Secretary of the Navy:

KEVIN M. MCCOY
Vice Admiral, United States Navy
Commander, Naval Sea Systems Commander

By Order of the Secretary of the Air Force:

NORTON A. SCHWARTZ
General, United States Air Force
Chief of Staff, USAF

Official:

JANET C. WOLFENBARGER
General, United States Air Force
Commander, AFMC

History. This is a complete revision of TB 700-2 NAVSEAINST 8020.8B, TO 11A-1-47, DLAR 8220.1.

Summary. This publication sets forth detailed procedures for hazard classifying ammunition and explosives in accordance with Department of Transportation regulations, North Atlantic Treaty Organization guidelines, and United Nations recommendations.

Applicability. This TB applies to all Hazard Classifications for the Department of Defense and the Department of Energy's ammunition and explosives.

Proponent and Authority. The proponent of this TB is the Chairman, Department of Defense Explosives Safety Board, Suite 16E12 4800 Mark Center Drive, Alexandria, VA 22350-3606, Phone DSN: 372-6747, Commercial: (571) 372-6747; Fax: (571) 372-6752; usarmy.pentagon.hqda-dod-esb.mbx.web-team@mail.mil.

Suggested Improvements. Users are invited to send comments, corrections, and suggested improvements directly to the Chairman, Department of Defense Explosives Safety Board, Suite 16E12 4800 Mark Center Drive, Alexandria, VA 22350-3606, Phone DSN: 372-6747, Commercial: (571) 372-6747; Fax: (571) 372-6752; usarmy.pentagon.hqda-dod-esb.mbx.web-team@mail.mil.

Distribution. To be distributed in accordance with initial distribution number (IDN) 343699 requirements for TB 700-2.

*****This publication supersedes TB 700-2, NAVSEAINST 8020.8B, TO 11A-1-47, DLAR 8220.1, 5 January 1998.

CONTENTS

Contents ii

Figures iii

Tables iv

CHAPTER 1 Introduction 1
1-1. Purpose 1
1-2. References 1
1-3. Governing Regulations 1
1-4. Application 1
1-5. Exclusions 1

CHAPTER 2 Hazard Classification 2
2-1. Hazard Classes 2
2-2. Class 1 Hazard Divisions 2
2-3. Hazard Class 2 through Class 9 2
2-4. Projection/Firebrand Distances 2
2-5. Compatibility Groups 3
2-6. Sensitivity Groups 4
2-7. Proper Shipping Name and Identification Number 4
2-8. Joint Hazard Classification System (JHCS) 6

CHAPTER 3 Hazard Classification Procedures 6
3-1. Introduction 6
3-2. DoD FHC Procedures 7
3-3. FHC Administrative Procedures 9
3-4. FHC Authorities 10
3-5. IHC Procedures 10
3-6. IHC Authorities 11

CHAPTER 4 Hazard Classification Special Applications 12
4-1. Introduction 12
4-2. Non-Class 1 and Not Regulated AE 13
4-3. Batteries 13
4-4. Samples for Laboratory Examination 14
4-5. Phosphorus Explosive Weight Contribution 14
4-6. Hazard Classification of Unexploded Ordnance (UXO) 14
4-7. Hazard Classification of Munitions and Explosives of Concern (MEC) Other Than UXO 15
4-8. Hazard Classification of Recovered Chemical Warfare Material (RCWM) 15
4-9. Hazard Classification of Material Potentially Presenting an Explosive Hazard (MPPEH) / Material Documented as an Explosive Hazard (MDEH) 15
4-10. Storage and Transportation without DoD IHC or FHC 15
4-11. Reactive Materials 17

CHAPTER 5 Hazard Classification by Test 17
5-1. Introduction 17
5-2. UN Series 1 and Series 2 (New Substance Tests) 21
5-3. UN Series 3 Tests (New Substance Tests) 28
5-4. UN Series 4 Tests (New AE) 35
5-5. Harmonized HD 1.1, HD 1.2.1, HD 1.2.2, HD 1.3, and HD 1.4 Assignment Tests (UN Series 6) 39
5-6. HD 1.2.3 Assignment Tests 47
5-7. HD 1.6 Assignment Tests 51
5-8. Alternate Hazard Division Assignment Tests 62
5-9. Test for Exclusion from Class 1 66

CHAPTER 6 Instrumentation, Interpretation of Results 66
6-1. Introduction 66
6-2. Air-blast Measurements 67
6-3. Hazardous Projection Assessment 71
6-4. Thermal Effects Assessment 73

APPENDIX A - References 74

APPENDIX B - Glossary 76

APPENDIX C - List of Acronyms 81

FIGURES

Figure 2-1 Sensitivity Group Assignment Methodology 5
Figure 2-2 Directional (Focused) Effect HE Designator Assignment Methodology 6
Figure 5-1 DoD and DOE AE Hazard Classification Guidance for Substances and Articles 18
Figure 5-2 Gap Test Configuration for Solid Substances (UN Test 1(a)) 22
Figure 5-3 Gap Test Configuration for Liquid Substances (UN Test 1(a)) 23
Figure 5-4 Standard Detonator 24
Figure 5-5 Internal Ignition Test Configuration (UN Test 1(c) (ii)) 25
Figure 5-6 Gap Test Configuration for Solid Substances (UN Test 2(a)) 26
Figure 5-7 Gap Test Configuration for Liquid Substances (UN Test 2(a)) 27
Figure 5-8 Bureau of Explosives Impact Machine (UN Test 3(a)(i)) 29
Figure 5-9 ABL Friction Sensitivity Test (DoD Test) 30
Figure 5-10 BAM Friction Apparatus (UN Test 3(b)(i)) 32
Figure 5-11 Instrumented Instability Apparatus for Second Part of Thermal Stability Test (UN Test 3(c)) 33
Figure 5-12 Small-scale Burning Test Configuration (UN Test 3(d)) 34
Figure 5-13 Steel Tube Drop Test for Liquid Substances (UN Test 4(b)(i)) 36
Figure 5-14 40-ft (12 m) Drop Test Impact Surface Configuration (UN Test 4(b)(ii)) 37
Figure 5-15 Typical Liquid Fuel/External Fire Test Configuration 42
Figure 5-16 Suggested Liquid Fuel/External Fire Test Data Sheet 46
Figure 5-17 Relationship of Projection Kinetic Energy and Hazard Division 47
Figure 5-18 Typical Bullet Impact Test Configuration 49
Figure 5-19 Suggested Bullet Impact Test Data Sheet 50
Figure 5-20 EIS Cap Sensitivity Test Configuration (UN Test 7(a)) – Cardboard Tube 52
Figure 5-21 EIS Cap Sensitivity Test Configuration (UN Test 7(a)) – Lead Cylinder 52
Figure 5-22 EIS Gap Test Configuration (UN Test 7(b)) 53
Figure 5-23 SUSAN Impact Test Configuration (UN Test 7(c)(i)) 54
Figure 5-24 SUSAN Impact Test Projectile (UN Test 7(c)(i)) 55
Figure 5-25 Standard Steel Pipe EIS Test Item 56
Figure 5-26 EIS Bullet Impact Test Configuration (UN Test 7(d)(i)) 56

Figure 5-27 EIS External Fire (Bonfire) Test Configuration (UN Test 7(e)) ... 58
Figure 5-28 EIS Slow Cook-off Test Configuration (UN Test 7(f)) ... 59
Figure 5-29 Standard Fragment for 1.6 Article Fragment Impact Test ... 61
Figure 5-30 Typical Setup for 1.6 Article Fragment Impact Test. ... 62
Figure 5-31 Super Large Scale Gap Test Configuration ... 63
Figure 5-32 Unconfined Critical Diameter Test Configuration ... 64
Figure 5-33 70 kbar Gap Test Configuration ... 65
Figure 6-1 Classical Air-blast Overpressure Curve ... 67
Figure 6-2 Hemispherical and Cylindrical Air-blast Overpressure ... 69
Figure 6-3 Computation of EEW from Test and Reference Data ... 70
Figure 6-4 Computation of EEW from Test and Reference Impulse Data ... 70
Figure 6-5 Typical Recovery Sector Configuration for Projection Sampling from SR or LF/EF Tests ... 72

TABLES

Table 2-1 Hazard Classes ... 2
Table 2-2 Class 1 Hazard Divisions ... 2
Table 2-3 Class 2 through Class 9 Hazard Divisions ... 3
Table 2-4 Typical AE Sensitivity Group Assignment ... 5
Table 3-1 Information Required for Final Hazard Classification Methods ... 7
Table 3-2 FHC Authorities ... 10
Table 3-3 IHC Authorities ... 12
Table 3-4 Additional IHC Authorities (as delegated by the Services) ... 12
Table 5-1 Response Descriptors. ... 19
Table 5-2 Tests to Demonstrate Substance Explosive or Pyrotechnic Effect ... 21
Table 5-3 Substance Hazard Classification Tests ... 28
Table 5-4 UN Series 4 Tests ... 35
Table 5-5 HD 1.1, HD 1.2, HD 1.3, and HD 1.4 Assignment Tests ... 39
Table 5-6 HD 1.2.3 Assignment Tests ... 47
Table 5-7 HD 1.6 Assignment Tests ... 51
Table 5-8 UN Series 7 Tests Extremely Insensitive Substance (EIS) ... 51
Table 5-9 Alternate Solid Propellant Rocket Motor Tests for Single Package and SR Tests ... 62

CHAPTER 1 **Introduction**

1-1. Purpose

This publication provides ammunition and explosives (AE) hazard classification procedures for transportation and storage by the Department of Defense (DoD) Components (DoDC) and the Department of Energy (DOE). It sets forth procedures for assessing the potential reaction of AE to specified phenomenon. Based on AE reactions, procedures are provided to assign the Class and Hazard Division (HD) for AE transportation and storage.

1-2. References

See Appendix A – References.

1-3. Governing Regulations

These procedures implement the requirements of Department of Transportation (DOT) Title 49, Code of Federal Regulations (CFR), Parts 100 to 185, reference (A.1), DoD Directive 6055.9E, reference (A.2), DoDM 6055.09-M, reference (A.3), and North Atlantic Treaty Organization (NATO) Standardization Agreement (STANAG) No. 4123, reference (A.4). Title 49 CFR adopts the United Nations (UN) Recommendations on the Transportation of Dangerous Goods—Model Regulations, reference (A.5) and Manual of Tests and Criteria, reference (A.6). These hazard classification procedures are harmonized to leverage test methodologies common to Insensitive Munitions (IM) and Hazard Classification. This harmonization has resulted in test procedures that deviate from Title 49 CFR, reference (A.1). STANAG 4439, reference (A.7), provides additional guidance concerning IM.

1-4. Application

a. All AE must be hazard classified prior to transportation or storage.

b. These procedures apply to all DoD and DOE AE in their storage and transportation configuration. They apply to new AE or new packaging, or when modifying existing AE or packaging.

c. Changes to these procedures do not necessarily apply retroactively to previously hazard classified AE.

d. Test planning for hazard classification or other similar purposes (e.g., service qualification, IM assessment, or system vulnerability) should minimize resources required by tailoring test protocols in accordance with these procedures and by coordinating test plans with appropriate authorities.

1-5. Exclusions

These procedures result in a hazard classification for the AE transportation and storage configuration only. Hazards during AE manufacture, use, or demilitarization are not addressed. In addition, tests are not included to address susceptibility to accidental initiation by:

a. Electrostatic and electromagnetic influence.
b. Vibration and rough handling.
c. Effects of exposure to hot or cold environments.
d. Mechanical defects.
e. Solar radiation.
f. Temperature shock.
g. Abnormal functioning.
h. Combat exposure.
i. Ionizing radiation.

CHAPTER 2 **Hazard Classification**

2-1. Hazard Classes

The hazard classification system consists of the nine hazard classes, shown in Table 2-1, and a Not Regulated (N.R.) category. The N.R. category is used when explosive substances or hazardous materials in an article do not meet the criteria for assignment to one of the nine classes. AE will be assigned to the class that represents its predominant hazard characteristic. (NOTE: Criteria provided by these procedures are provided in English units (e.g., ft, lb, psi, etc.) with metric equivalents shown in parenthesis (e.g., m, kg, kPa, etc.). Data presented for hazard classification assignment may be in either English or metric units.)

Table 2-1
Hazard Classes

Hazard Class	Material
Class 1	Explosives
Class 2	Gases
Class 3	Flammable liquids
Class 4	Flammable solids
Class 5	Oxidizing substances and organic peroxides
Class 6	Toxic and infectious substances
Class 7	Radioactive materials
Class 8	Corrosive substances
Class 9	Miscellaneous dangerous substances and articles

2-2. Class 1 Hazard Divisions

Table 2-2 presents the six Class 1 HD assignments available for further description of the character and predominance of the explosive hazards present. HD 1.2 is divided into three subdivisions that are used only for DoD and DOE storage by serving to better characterize the expected AE fragmentation effects.

Table 2-2
Class 1 Hazard Divisions

Hazard Division		Type of hazard
1.1		Mass Explosion
1.2		Non-Mass Explosion, Fragment Producing
	1.2.1	The more hazardous HD 1.2 AE (see para 5-5*f*).
	1.2.2	The less hazardous HD 1.2 AE (see para 5-5*f*).
	1.2.3	HD 1.2 AE that meets specific testing criteria (see para 5-6).
1.3		Mass fire, minor blast or fragment
1.4		Moderate fire, no significant blast or fragment
1.5		Explosive substance, very insensitive (with mass explosion hazard)
1.6		Explosive article, extremely insensitive (no mass explosion hazard)

2-3. Hazard Class 2 through Class 9

Classing AE based on predominant hazard must use the procedures and criteria in 49 CFR 173, reference (A.1), for assessing other hazardous materials characteristics. Table 2-3 provides the HD assignments available for Class 2 through Class 9 articles and substances.

2-4. Projection/Firebrand Distances

A projection or firebrand distance may need to be indicated by a parenthetical number placed to the left of HD 1.1 through HD 1.3 AE (e.g., (18)1.1, (14)1.2.1, (08)1.2.3, or (02)1.3). A distance is necessary when AE effects are such that default inhabited building distances (IBD) established in DoDM 6055.09-M reference (A.3), do not provide appropriate protection from hazardous fragments or firebrands.

For HD 1.1, HD 1.2.1, and 1.2.3, the parenthetical number represents the AE hazardous fragment areal density range, i.e., the hazardous fragment distance, rounded up to the nearest 100 ft. For HD 1.3, the parenthetical number represents the hazardous firebrand distance, also rounded up to the nearest 100 ft.

Table 2-3
Class 2 through Class 9 Hazard Divisions

Hazard Division	Materials
Class 2	Gases
2.1	Flammable gases
2.2	Non-flammable, compressed gases
2.3	Toxic Gases
Class 3	Flammable and combustible liquids
Class 4	Flammable solids
4.1	Flammable solids, desensitized explosives, self-reactive materials, readily combustible solids
4.2	Spontaneously combustible materials
4.3	Dangerous when wet materials
Class 5	Oxidizing substances and organic peroxides
5.1	Oxidizers
5.2	Organic peroxides
Class 6	Toxic and infectious substances
6.1	Toxic materials
6.2	Infectious substances
Class 7	Radioactive materials
Class 8	Corrosive materials
Class 9	Miscellaneous hazardous materials

2-5. Compatibility Groups

a. AE are segregated into thirteen transportation and storage Compatibility Groups (CG) based on their similarity of function, features, and accident effects potential. The CG are identified as Group A through Group S. All Class 1 AE must have a CG assigned. Testing may be required for assignment to CG S or N. For energetic liquids the energetic liquid compatibility group (ELCG) assigment must be in accordance with DoDM 6055.09-M (A.3)

b. Some non-Class 1 AE may also have a CG assigned. An assignment allows storage of the non-Class 1 AE with Class 1 AE. DOT does not recognize CG for non-Class 1 AE transportation by commercial carrier. Examples of non-Class 1 AE with CG assigned include:

(1) AE containing explosive substances that are classified as N.R.

(2) AE containing explosive substances and other hazardous materials that are classified as Class 2 through Class 9.

(3) AE not containing explosive substances, but containing other hazardous materials which are classified as Class 2 through Class 9.

c. The thirteen CG are:

(1) *Group A*. Initiating (primary) explosives. Bulk initiating explosives that have the necessary sensitivity to heat, friction, or percussion to make them suitable for use as initiating elements in an explosive train. Examples: bulk lead azide, lead styphnate, mercury fulminate, tetracene, dry cyclonite (RDX), and dry pentaerythritol tetranitrate (PETN).

(2) *Group B*. Detonators and similar initiating devices not containing two or more effective protective features. Items containing initiating explosives that are designed to initiate or continue the functioning of an explosive train. Examples: small arms primers, detonators, blasting caps, and fuzes. (For electrically-fired non-interrupted explosive train initiators and fuzes, see note below.)

(3) *Group C*. Bulk propellants, propelling charges, and devices containing propellant with, or without, its own means of ignition. Examples: bulk single-, double-, or triple-base, and composite propellants, rocket motors (solid propellant), and propelled AE with inert projectiles.

(4) *Group D*. Bulk black powder; bulk high explosive (HE); and AE without a propelling charge, but containing HE without its own means of initiation, i.e., no initiating device is present or the device has two or more effective protective features. Examples: bulk trinitrotoluene (TNT), Composition B, and black powder; bulk wet RDX or PETN; bombs, projectiles, cluster bomb units (CBU), depth charges, and torpedo warheads. (For electrically-fired non-interrupted explosive train initiators and fuzes, see note below.)

(5) *Group E*. AE containing HE without its own means of initiation and either containing, or with, a solid propelling charge. Examples: artillery AE, rockets, and guided missiles.

(6) *Group F*. AE containing HE with its own means of initiation, i.e., the initiating device present has less than two effective protective features, and with or without a solid propelling charge. Examples: grenades, sounding devices, and similar items having explosive trains with less than two effective protective features.

(7) *Group G*. Illuminating, incendiary, and smoke (including hexachlorethane) or tear-producing AE excluding those that are water-activated or that contain White Phosphorous (WP) or a flammable liquid or gel. Examples: flares, signals, and pyrotechnic substances.

(8) *Group H*. AE containing WP. AE in this group contains fillers that are spontaneously flammable when exposed to the atmosphere. Examples: WP, and plasticized white phosphorous.

(9) *Group J*. AE containing flammable liquids or gels other than those that are spontaneously flammable when exposed to water or the atmosphere. Examples: liquid- or gel-filled incendiary AE, fuel-air explosive devices, and flammable liquid-fueled missiles and torpedoes.

(10) *Group K*. AE containing toxic chemical agents. AE in this group contains chemicals specifically designed for incapacitating effects more severe than lachrymation (tear-producing). Examples: artillery or mortar AE (fuzed or unfuzed), grenades, rockets and bombs filled with a lethal or incapacitating chemical.

(11) *Group L*. AE not included in other CG. AE having characteristics that present a special risk that does not permit storage with other types of AE, or other kinds of explosives, or dissimilar AE of this group. Examples: water-activated devices, pyrophorics and phosphides and devices containing these substances, prepackaged hypergolic liquid-fueled rocket engines, triethyl aluminum (TEA), thickened TEA (TPA), and damaged or suspect AE of any group. (NOTE: Different types of AE in CG L presenting similar hazards may be stored together.)

(12) *Group N*. AE articles containing only extremely insensitive substances (EIS).

(13) *Group S*. AE that presents no significant hazard. AE packaged or designed so that any hazardous effects from accidental functioning are limited to an extent that they do not significantly hinder firefighting. Projections shall not exceed 6 ft-lb (8 joules (J)) in energy. Examples: explosive switches or valves, and some small arms cartridges.

(NOTE: Electrically-fired non-interrupted explosive train initiators and fuzes should be assigned CG D provided the explosives contained within are approved per MIL-STD-1316 and the device is not capable of being initiated by any electrical potential of less than 500 volts. Otherwise, CG B should be assigned.)

2-6. Sensitivity Groups

HD 1.1 and HD 1.2.1 AE are segregated into five sensitivity groups (SG) based on their physical attributes. SG are used for storage within a high performance magazine (HPM) or where ARMCO Revetments or substantial dividing walls are present. Directional (focused) HE effect AE (e.g., shaped charge jets, and directional warheads) are further identified by assigning the suffix “D” following the SG designation (e.g., SG2D).

a. Table 2-4, and Figure 2-2 illustrate SG assignments.

b. AE-specific testing or analyses may be used to change a SG assigned based on physical attributes.

2-7. Proper Shipping Name and Identification Number

a. AE are assigned a proper shipping name (PSN) and corresponding four-digit identification number (i.e., “UN Number”) as defined in 49 CFR Table 172.101, reference (A.1).

b. For those PSN that also require a technical name assignment per 49 CFR 172.101(b)(4), reference (A.1), the name of the particular substance(s) contained in the AE or the name of the article itself will be used. When a substance technical name is assigned for an article or substance consisting of two or more hazardous materials, the technical names of at least two components most predominantly contributing to the hazards of the article or substance should be provided.

c. Where 49 CFR Table 172.101 lists multiple PSN for the same UN number (e.g., UN 0012, 0014, 0327, 0338, 0339, and 0417), the Hazard Classifier will assign the most accurate PSN. However, for cartridges less than 20 mm, either PSN associated with the UN number is permissible for transportation in commerce.

Table 2-4
Typical AE Sensitivity Group Assignment

Sensitivity Group	Criteria	Typical AE
1 – Robust[1]	a. High Explosive Weight (HEW)/empty warhead or projectile case weight < 1.0 b. Warhead or projectile minimum case thickness > 0.4 inches (1.0 cm) c. Scaled warhead or projectile minimum case thickness (case thickness/HEW$^{1/3}$) > 0.05 in/lb$^{1/3}$ (1.65 mm/kg$^{1/3}$)	20 mm, 25 mm, 30 mm cartridges, and MK 80 Series General Purpose bombs
2 – Non-Robust[1]	a. HEW/empty warhead or projectile case weight > 1.0 b. Warhead or projectile minimum case thickness < 0.4 inches (1.0 cm) c. Scaled warhead or projectile minimum case thickness (case thickness/HEW$^{1/3}$) < 0.05 in/lb$^{1/3}$ (1.65 mm/kg$^{1/3}$)	Missiles, rockets, underwater mines and fuzes with safety devices
3 – Non-Robust, Fragmenting	Warhead and projectile cases designed for specific fragmentation	Preformed fragment warheads, scored warhead cases, or continuous rod warheads
4 – Cluster bombs/ dispenser munitions	Cluster or dispenser weapons	CBU-87, CBU-97
5 – Other	a. Sympathetic propagation sensitive or b. Very thin skinned items, i.e., with scaled case thickness (case thickness/HEW$^{1/3}$) < 0.004 in/lb$^{1/3}$ (0.132 mm/kg$^{1/3}$)	Detonators, other similar initiating devices, demolition explosives, sheet explosives, and bare explosives

NOTE: 1. AE must meet two of the three criteria.

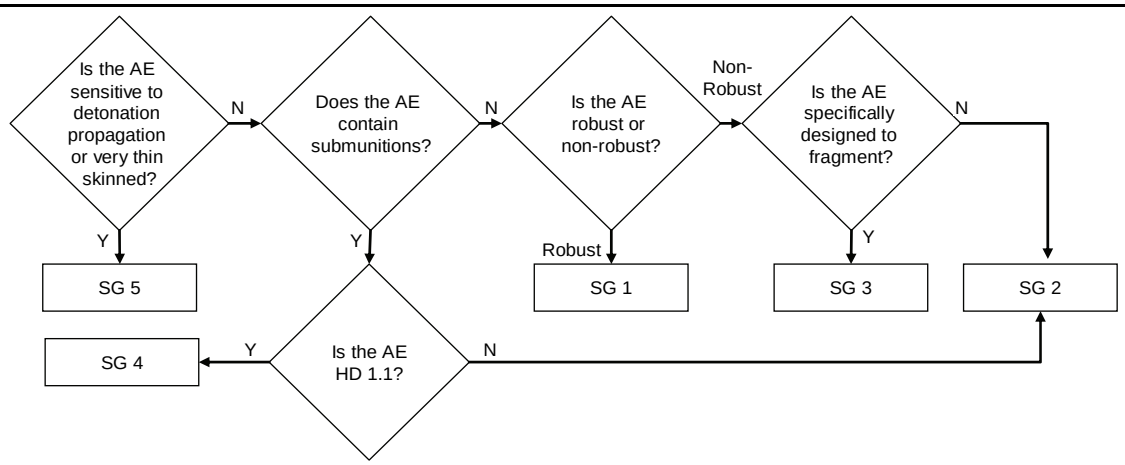

Figure 2-1 Sensitivity Group Assignment Methodology

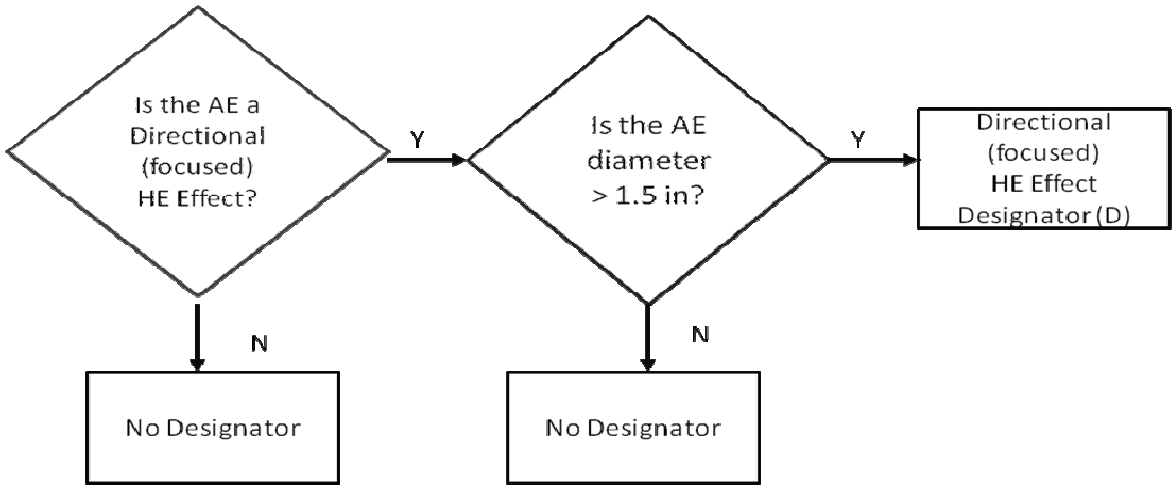

Figure 2-2 Directional (Focused) Effect HE Designator Assignment Methodology

2-8. Joint Hazard Classification System (JHCS)

The JHCS is the authoritative source for DoD AE hazard classification data. Entries in the JHCS serve as the official record of hazard classification for DoD AE shipments and may be used in lieu of a DOT Classification of Explosives approval letter. The JHCS is accessible via the U.S. Technical Center for Explosives Safety website (https://www3.dac.army.mil) using a password and login that can be requested at the website.

CHAPTER 3 Hazard Classification Procedures

3-1. Introduction

a. For AE transportation and storage, the sponsoring organization (see para 3-2*a*) must obtain either a Final Hazard Classifications (FHC), Interim Hazard Classifications (IHC), or meet the conditions of paragraph 4-10.

b. A FHC is required prior to the materiel release of AE for operational service. If the FHC is not complete, an IHC can be assigned provided the IHC authority (see para 3-6) is satisfied that the sponsoring organization is actively pursuing the FHC. (NOTE: An IHC is not valid for all transportation scenarios (see para 3-1*c*).) A FHC is valid for DoD storage worldwide and all modes of transportation (i.e., surface, air, water) entering, departing, or within the United States. Each mode may have restrictions or limitations based on hazard classification (e.g., HD 1.1 AE are forbidden on commercial passenger aircraft) and may have unique requirements regarding compatibility. Restrictions, limitations and compatibility requirements are contained in applicable transportation mode regulations, references (A.1), and (A.8) through (A.12). Transportation within a foreign country may require coordination with the host nation's Competent Authority.

c. An IHC may be issued by an IHC authority (see para 3-6) for a variety of reasons (e.g., research and development, foreign AE exploitation, demilitarization, or FHC in process). An IHC is valid for DoD storage worldwide, for domestic transportation, and for international transportation by a military carrier. Each mode may have restrictions or limitations based on hazard classification (e.g., HD 1.1 AE are forbidden on commercial passenger aircraft) and may have unique requirements regarding compatibility. Restrictions, limitations and compatibility requirements are contained in applicable transportation mode regulations, references (A.1), and (A.8) through (A.12). Transportation within a foreign country may require coordination with the host nation's Competent Authority.

d. IHC and FHC issued by or to the DoD or DOE are only valid for transportation and storage by DoD, DoD contractors or subcontractors, DOE, and DOE contractors or subcontractors. DoD and DOE

contractors or subcontractors must have government authorization (e.g., a contract, solicitation) for their possession of the AE. IHC issued to a DoD or DOE contractor are valid for that contractor and its subcontractors only.

e. Foreign Competent Authority hazard classifications are not automatically valid for use by the DoD or DOE. Review by the appropriate Hazard Classifier is required except as permitted by paragraph 4-10.

f. The DOE is authorized by DOT in 49 CFR 173.56(b)(3), reference (A.1), to examine, classify and approve explosives in accordance with these hazard classification procedures. Except for coordinating with the Chairman of the Department of Defense Explosives Safety Board (DDESB) and the Service Hazard Classifiers, DOE follows the procedures described in paragraph 3-2. FHC are submitted to DOT in accordance with appropriate DOE testing procedures, references (A.13) through (A.16).

3-2. DoD FHC Procedures

a. The DoDC sponsoring AE development, or first adopting AE for use, is responsible for developing the data required to assign an appropriate hazard classification and for forwarding that data to the applicable Service Hazard Classifier (see para 3-4).

b. The methods to support an AE FHC are:

(1) Hazard classification by Test
(2) Hazard classification by Analogy
(3) Hazard classification as Pre-1980 AE
(4) Hazard classification as Not New AE
(5) Hazard classification by Predominant Hazard
(6) Hazard classification by 49 CFR 173.56(h)

c. The method to be used depends upon the specific history and characteristics of the AE to be hazard classified. The information required to support each method of hazard classification is summarized in Table 3-1 and detailed in the following paragraphs.

Table 3-1
Information Required for Final Hazard Classification Methods

Supporting Data	By Test	By Analogy	Pre-1980 AE	Not New AE	Predominant Hazard	49 CFR 173.56(h)
1. Chapter 5 test results	X[1]					
2. Technical Data Package	X	X	X	Y[2]	X	Y
3. Comparison of parent AE to new AE		X		X		
4. Summary of tests and results of AE doing analogy to		X				
5. AE materiel release date and hazard classification of record			X			
6. Applicable UN Series 3 or Series 4 test results or statement why substances are not forbidden[3]	X	X		X	X	X

Notes: 1. "X" identifies essential supporting data needed for each method.
2. "Y" indicates that a sufficient technical description is required as rationale for the FHC.
3. The EX number of an article that contains the same substance(s) may suffice dependent on configurations.

(1) *Classification by Test*. This method uses test data on the specific AE to assign the hazard classification. The minimum supporting data required are:

(a) A report describing the results of tests conducted in accordance with Chapter 5 or conducted under an alternate test plan approved by the Chairman, DDESB following Service Hazard Classifier coordination

(see para 3-3*e*). (NOTE: The use of an approved alternate test plan must be referenced in the test report.) If the tests from Chapter 5 require video, an abreviated version documenting the reactions shall be provided.

(b) A Technical Data Package (TDP) that includes:

1. A chart of the Class 1 through Class 9 hazardous materials in the AE, including relevant weights, compositions, volumes, pressures, etc.

2. AE drawings that illustrate the locations of hazardous materials.

3. Packaging assembly drawings.

4. AE functional narrative including fuze and/or ignition safety features, if applicable.

5. AE empty case weight and thickness.

(c) UN Series 3 and/or UN Series 4 test results (see Chapter 5) or a statement of the rationale supporting the conclusion that the article is not forbidden for transportation.

(2) *Hazard Classification by Analogy*. This method uses hazard classification test data for similar AE to hazard classify new AE (i.e., the parent AE must have been tested).

(a) The following are required to document the AE similarities and differences:

1. A TDP per paragraph 3-2*c*(1)(*b*) for both the parent (including the EX number), if available, and the new AE.

2. The parent and new AE design features.

3. The parent AE and new AE packaging designs.

4. The FHC package (i.e., hazard classification tests conducted and the results obtained) for the parent AE.

5. A statement of the rationale supporting the conclusion that the AE is not forbidden for transportation if UN Series 3 or UN Series 4 test results are not available.

(b) The parent AE hazard classification test procedures must be compared to current test procedures. The results of the parent AE tests must be compared to the expected reactions of the new AE under current test procedures and assignment protocols. Differences will be assessed to determine if hazard classification by analogy remains viable or if additional testing is required.

(3) *Pre-1980 AE*. This method applies to AE that were fielded before 1980, but were not included in the JHCS and were not assigned an EX number by DOT. Hazard classification assignments for these AE may be forwarded for filing with DOT if supported by the following data:

(a) A TDP per paragraph 3-2*c*(1)*(b)*.

(b) The AE materiel release date or appropriate service documentation.

(c) The hazard classification of record.

(4) *Not New AE*. This method applies to AE that are not considered new because changes made to parent AE (e.g., electronics, hardware, minor elements of packaging) are assessed to not affect the hazard characteristics. Alterations of explosive components or packaging may require the AE to be hazard classified by another method. The AE HD and CG assigned must be the same as that assigned to the parent AE. The parent AE must not have been classified by the Not New or 49 CFR 173.56(h) methods. The minimum supporting data required for a Not New AE submission are:

(a) A TDP per paragraph 3-2*c*(l)(*b*) when needed to justify the classification.

(b) A comparison between the parent AE and the AE being classified, including configuration and packaging. Differences must be thoroughly described.

(c) The parent AE EX number or FHC documentation.

(d) UN Series 3 and/or UN Series 4 test results (see Chapter 5) or a statement of the rationale supporting the conclusion that the article is not forbidden for transportation.

(5) *Hazard Classification by Predominant Hazard*. This method is used to hazard classify AE that contain explosive substances, but exhibit predominant hazard characteristics requiring assignment to a class other than Class 1 (see para 2-3). The minimum supporting data are:

(*a*) A TDP per paragraph 3-2*c*(1)*(b)*.

(*b*) The rationale supporting the determination of which non-Class 1 hazard predominates and specifically why it predominates over the Class 1 hazard.

(c) UN Series 3 and/or UN Series 4 test results (see Chapter 5), or a statement of the rationale supporting the conclusion that the article is not forbidden for transportation.

(d) Weight of the predominant hazard material if the material is solid. Volume and pressure of the predominant hazard material if the material is liquid or gas.

(6) *Hazard Classification by 49 CFR 173.56(h).* This method may be used to hazard classify certain small arms cartridges as HD 1.4S in accordance with 49 CFR 173.56(h), reference (A.1), with alterations applicable to DoD only regarding .50 caliber, shotgun shells, machine guns, and tracer projectiles. This method applies to less than .50 caliber cartridges including those used in machine guns or containing a small tracer in the projectile and shotgun shells not exceeding 12 gauge. The minimum supporting data are:

(*a*) A technical description sufficient to document that the AE meets the criteria in 49 CFR 173.56(h).

(*b)* UN Series 3 or UN Series 4 test results or a statement of the rationale supporting the conclusion that the AE is not forbidden for transportation.

d. Once the FHC is assigned, any change in the AE (i.e., its design or explosive/energetic components, reguardless of any form, fit or function factors) or its packaging requires a re-examination by the Service or DOE Hazard Classifier (see para 3-4) to ascertain the need for a new hazard classification. A determination that a new hazard classification is necessary requires the modified AE configuration to be assigned a new unique product code (see para 3-3.f.) for reentry into the DoD FHC procedures (see para 3-2).

3-3. FHC Administrative Procedures

a. An AE FHC documentation package is prepared and forwarded by the Service Hazard Classifier (see para 3-4) to the other Service Hazard Classifiers, when required for concurrence, and to the Chairman, DDESB for approval. The Chairman, DDESB forwards their approval through the Surface Deployment and Distribution Command (SDDC) to DOT for issuing an EX number.

b. DOE AE FHC administrative procedures are in accordance with DOE test procedures, references (A.13) through (A.16).

c For AE that do not contain explosive substances, but require a CG for storage purposes, the FHC is coordinated with the Service Hazard Classifiers and approved by the Chairman, DDESB, and is entered in the JHCS. It is not submitted to SDDC or DOT.

d. The Service Hazard Classifiers (see para 3-4) will advise the Chairman, DDESB within 30 days of receiving a FHC of their concurrence or non-concurrence. Failure to reply within 30 days indicates concurrence. The Chairman, DDESB will resolve non-concurrence. For hazard classification by the Not New or the 49 CFR 173.56(h) methods, Service Hazard Classifiers concurrence is not required.

e. The Service Hazard Classifier (see para 3-4) will forward a proposed alternate test plan to the Chairman, DDESB and the other Service Hazard Classifiers for review, revision and approval. The other Service Hazard Classifiers will advise Chairman, DDESB within 45 days of receiving the alternate test plan of their input. Failure to reply within 45 days indicates concurrence.

f. For shipment of AE, 49 CFR, reference (A.1), requires package markings to reflect the EX number for each explosive substance or article, unless a DoD or DOE IHC accompanies the shipment. An alternative permitted in 49 CFR provides for using the National Stock Number (NSN) or a product code (e.g., the DoD contract number or manufacturer's part number for markings or shipping descriptions), provided the NSN or product code is traceable to a specific EX number.

Most shipments of DoD AE rely on the NSN as part of the package marking. However, when acquisition practices provide for purchases of AE against performance specifications, and several contractors produce essentially the same AE under those specifications, a single NSN may be assigned. Since an examination and hazard classification action is required for each contractor's AE, this process will result in a NSN with several EX numbers. In such cases, the package marking must include the EX

number or product code. If the DoDC relies on a product code, the code must be included in the item nomenclature filed with DOT. The JHCS entries for these AE will include a corresponding requirement in the Special Remarks field.

g. DoD final hazard classifications are valid for transporting Foreign Military Sales (FMS) AE for the initial export shipment. If the designated delivery point for that export shipment is beyond a foreign port of entry, relevant transportation regulations and practices of the countries between the port and delivery point apply and compliance may include DoD obtaining those countries' Competent Authority approvals prior to shipment. Once FMS AE has been initially delivered, the FMS customer is responsible for obtaining all appropriate country-specific approvals for transportation and storage thereafter.

h. DoD final hazard classifications are not valid for direct sales of AE between manufacturers and foreign customers.

i. When a technical name is required (see para 2-7*b*), it will be included as part of the FHC package submitted to DOT for assignment of an EX number.

3-4. FHC Authorities

a. The addresses of the Service Hazard Classifiers, DOE and the Chairman, DDESB are provided in Table 3-2.

Table 3-2
FHC Authorities

Director U.S. Army Technical Center for Explosives Safety ATTN: JMAC-EST 1 C Tree Road, Building 35 McAlester, OK 74501-9053	Commanding Officer Naval Ordnance Safety and Security Activity Farragut Hall 3817 Strauss Avenue, Suite 108 Indian Head, MD 20640-5151	Air Force Safety Center ATTN: SEWCH 9700 Avenue G SE Kirtland AFB, NM 87117-5670
Chairman Department of Defense Explosives Safety Board SUITE 16E12 4800 Mark Center Drive Alexandria, VA 22350-3606	Department of Energy National Nuclear Security Administration Office of Mission Safety PO Box 5400 Albuquerque, NM 87185 ATTN: NNSA/NA-SH	

3-5. IHC Procedures

a. The DoDC or DOE component sponsoring development or first adopting AE is responsible for providing the required data to the IHC authority (see para 3-6) for each new IHC or renewal.

(1) Test assets sufficient to support the requirements of Chapter 5 may not be available for AE needing an IHC. At a minimum, UN Series 3 or UN Series 4 test results or a statement of the rationale supporting the conclusion that the AE is not forbidden for transportation is required.

(2) Additional hazard classification test data may be required to support an IHC of other than HD 1.1. The additional tests will be dependent on the AE configuration and may include tests such as the Naval Ordnance Laboratory (NOL) Card Gap Test, reference (A.17), Armament Research, Development and Engineering Center (ARDEC) Solid Propellant Initiation Sensitivity Test, reference (A.19), Expanded Large Scale Gap Test, reference (A.17), or Super Large Scale Gap Test (SLSGT), see para 5-8*b*. Appropriate tests need to be coordinated with the IHC authority.

(3) Analogies to existing AE with FHC may be used for assigning IHC.

(4) Situations may arise where descriptive data and test data for AE needing an IHC is limited (e.g., foreign exploitation AE, or demilitarized AE). An IHC authority may issue an IHC provided qualified

personnel (e.g., Explosive Ordnance Disposal (EOD) personnel) have evaluated and determined the AE safe for transport.

(5) A nation's hazard classification from the National Competent Authority may be used in lieu of UN Series 3 or UN Series 4 data. NATO and partner nations classification data may be shared via the Munitions Safety Information Analysis Center (MSIAC).

b. IHC are valid for transportation for up to one year. IHC renewals for transportation require a request with justification for the continued need. IHC are authorized for transportation in commerce in accordance with DOT Special Permit 15448 or current DOT regulations.

c. IHC are valid for storage beyond one year if permitted by the Service Hazard Classifier or DOE.

d. Once the IHC is assigned, a change in the AE (i.e., design or explosive components) or its packaging requires a re-examination by the IHC authority (see para 3-6) to ascertain the need for a new hazard classification.

e. When AE without FHC require international shipment by commercial carrier for purposes other than FMS or materiel release, the criteria for obtaining an IHC must be satisfied, the need for the shipment must be justified, and a DOT EX number must be assigned. The Service Hazard Classifier processes the request for EX number assignment through the Chairman, DDESB and SDDC to DOT. For this case, the IHC and EX number are valid for no more than two years. The EX number will be entered into the JHCS with the temporary status appropriately detailed.

f. The following data, as applicable, will be provided as a part of the IHC request:

(1) AE nomenclature.

(2) NSN, part number or other unique identifier. (NOTE: Unique contractor part numbers or product codes are allowed for IHC.)

(3) Prime Contractor.

(4) Vendor.

(5) System with which the AE is associated.

(6) Next higher assembly with which the AE is used.

(7) Dimensions of unpackaged AE.

(8) Weight of unpackaged AE.

(9) Explosive substance compositions, types and weights.

(10) Hazard classification test data for new AE or analogous AE.

(11) Physical description of AE.

(12) Functional description of AE.

(13) Packaging data.

(14) Description of fuze safety features.

g. A central file will be maintained by each organization to which IHC authority is delegated. The documentation of each hazard classification will be maintained such that rapid retrieval is possible for as long as shipment or storage of the AE is necessary. A copy of the IHC will be furnished to any organization required to store or transport the AE.

h. A copy of each DoD IHC must be provided to appropriate IHC authorities and SDDC.

i. A copy of each DOE IHC must be provided to the Chairman, DOE Explosives Safety Committee.

j. A copy of the applicable DoD or DOE IHC and DOT Special Permit 15448 must be carried aboard each vehicle transporting interim hazard classified AE.

3-6. IHC Authorities

a. DoD or DOE IHC of AE must be approved (by signature) by designated personnel of one of the following organizations in Table 3-3.

Table 3-3
IHC Authorities

U.S. Army U.S. Army Technical Center for Explosives Safety 1 C Tree Road, Building 35 McAlester, OK 74501-9053 ATTN: JMAC-EST	U.S. Navy Naval Ordnance Safety and Security Activity Farragut Hall 3817 Strauss Avenue, Ste 108 Indian Head, MD 20640-5151	U.S. Air Force Air Force Safety Center 9700 Avenue G SE Kirtland AFB, NM 87117-5670 ATTN: SEWC	Department of Energy National Nuclear Security Administration Office of Mission Safety PO Box 5400 Albuquerque, NM 87185 ATTN: NNSA/NA-SH

b. For DoD, the names of the designated personnel will be provided to SDDC and continuously kept current.

c. For DOE, the names of the designated personnel will be provided to the National Nuclear Security Administration Office of the Associate Administrator for Safety and Health and continuously kept current.

d. The U.S. Army, U.S. Navy, U.S. Air Force, and DOE offices with IHC authority may authorize in writing additional persons to grant (by signature) IHC, subject to all the conditions and procedures of this chapter and DOT Special Permit 15448 or current DOT regulations. At the time of publication, those offices authorized are listed in Table 3-4.

Table 3-4
Additional IHC Authorities (as delegated by the Services)

U.S. Army	System Safety Office U.S. Army Research, Development and Engineering Command Armament Research, Development and Engineering Center Picatinny, NJ 07806–5000 ATTN: RDAR-QES-C	Safety and Health Office U.S. Army Research, Development and Engineering Command Edgewood Chemical Biological Center 5183 Blackhawk Road Aberdeen Proving Ground, MD 21010-5423 ATTN: RDCB-DPC-RH
Explosive Safety Office U.S. Army Research, Development and Engineering Command Army Research Laboratory Aberdeen Proving Ground, MD 21005–5066 ATTN: RDRL-LOA-T	Safety Office U.S. Army Aviation and Missile Command Redstone Arsenal, AL 35898–5000 ATTN: AMSAM–SF	
U.S. Air Force	Ogden Air Logistics Center 6033 Elm Lane (Bldg 1247) Hill AFB, UT 84056 ATTN: OO-ALC/GHGE	Systems Safety Air Armament Center 1001 North Second Street, Suite 366 Eglin AFB, FL 32542-6838 ATTN: AAC/SES

CHAPTER 4 **Hazard Classification Special Applications**

4-1. Introduction

a. This chapter provides classification guidance for AE with non-DoD classifications and AE that may be classified as Non-Class 1 or N.R. The Non-Class 1 and N.R. AE include:

(1) AE containing small quantities of explosive substances which in an inadvertent or accidental ignition or initiation do not present an effect external to the AE by projection, fire, smoke, heat or loud noise.

(2) AE containing small quantities of explosive substances and other regulated hazardous materials (i.e., Class 2 through Class 9).

(3) Batteries.

b. Guidance is also provided on storage and transportation of AE without a DoD hazard classification.

c. Hazard classification assignments specifically authorized by DOT exemptions or special permits are only valid for transportation. Classifications applicable for storage will be assigned in accordance with this publication.

4-2. Non-Class 1 and Not Regulated AE

a. AE that contains an explosive substance and has passed the function testing prescribed in paragraph 5-9 is excluded from Class 1, but could require assignment to another class (i.e., Class 2 through Class 9) based on the predominant hazard (see para 3-2*c*(5)). Otherwise, the AE is classified N.R.

b. AE may be classified as N.R. by the Test, Analogy, Not New, or Predominant Hazard methods.

c. If AE fails (or has not been subjected to) the function tests (see para 5-9), and the AE also exhibits hazards associated with one or more other classes (i.e., Class 2 through Class 9), a decision must be made as to which class reflects the predominant hazard. The AE should be assigned to that class.

4-3. Batteries

a. *Thermal Batteries*. Thermal batteries are activated by heat from the reaction of an energetic (e.g., explosive, propellant, or pyrotechnic). All of the following criteria shall be used to hazard classify thermal batteries and AE containing thermal batteries:

(1) The design or packaging of thermal batteries must provide protection of the output terminals from inadvertent electrical contact or shorting.

(2) For AE having circuits connected to the thermal battery output, testing must be conducted with the load circuit or equivalent circuit connected.

(3) A thermal battery or AE containing a thermal battery may be classified as N.R. if, after activation of the battery:

(a) The battery does not rupture or vent, and

(b) The external surface temperature of the battery or AE does not exceed 400°F (204°C). If the outside case temperature exceeds 400°F (204°C), the battery or AE may still be classified as N.R. if means are provided to prevent activation of the battery during normal transportation or storage operations such as those below:

1. For an electrically initiated battery, a substantial cap must be installed over the initiation contacts, or an electrical shunt must be connected across the initiation contacts. The means of attachment must be secure (e.g., threaded connection or positive retaining features to preclude inadvertent separation in transportation).

2. For a mechanically initiated battery or AE containing this type of battery, a strong physical barrier must shield the primer from inadvertent contact with a foreign object during transportation and storage, and the barrier cannot be removed without a positive intentional action, such as disassembly of a threaded connection. If the barrier also contains the firing mechanism, the firing pin must be constrained from contact with the primer by a safety pin or other positive means that requires intentional removal or requires an arming environment different from normal transportation and storage environments to allow functioning. Furthermore, no stored energy source, such as a pre-loaded firing pin spring, that is capable of initiating the primer after removal of all safeties may be used.

3. In AE that contain electrically initiated thermal batteries, positive means to prevent activation should be accomplished by securely mounting the batteries in hard-wired circuits. The design must also assure there is no charged electrical energy source available within the AE or its packaging that could initiate the thermal battery, and that there are no unprotected electrical contacts exposed on the surface of the AE or in unprotected attached electrical connectors. Connector covers with built in shunts that cannot be installed with incorrect pin positions should be considered. AE that include an uncharged source that can store sufficient energy to initiate the battery (e.g., a firing capacitor) should incorporate a bleeder resistor in the sources circuit.

(4) If the outside case temperature exceeds 400°F (204°C) and positive means are not provided to prevent activation, the thermal battery will be classified as Flammable solid, inorganic, not otherwise specified (n.o.s.) (thermal batteries) HD 4.1, UN 3178.

(5) Should the thermal battery rupture or vent upon function testing, the predominant hazard (i.e., Class 1 explosive hazard or Class 4 thermal hazard) should be identified and used to classify the battery or AE.

b. *Sealed Liquid-Electrolyte Batteries*. Batteries that are activated by injection of the electrolyte from a coil or chamber by pressure from the reaction of an energetic (e.g., explosive, propellant, or pyrotechnic) substance and AE containing such batteries may be classified as follows:

(1) A sealed liquid electrolyte battery, or AE that contains one or more such batteries and no other hazardous material, may be excluded from Class 1 if the battery passes the function test (see para 5-9). For AE, the tests may be conducted using the battery or AE. If the AE is tested, the battery must be connected to its load circuit or equivalent, in the configuration offered for transportation. The design or packaging of a battery must preclude inadvertent contact with or shorting of the output terminals.

(2) If the battery or AE can be excluded from Class 1, it can be classified N.R. if it also qualifies as non-spillable as prescribed in 49 CFR 173.159, reference (A.1).

(3) Batteries and AE that are excluded from Class 1, but which have not been qualified as non-spillable will be classed as either Battery, wet, filled with acid, Class 8, UN2794; or Battery, wet, filled with alkali, Class 8, UN2795.

(4) For sealed liquid electrolyte batteries or AE that contain such batteries that have not passed the tests required for exclusion from Class 1, a decision must be made as to whether the explosive hazard (Class 1) or corrosive hazard (Class 8) predominates, and the classification assigned accordingly.

4-4. Samples for Laboratory Examination

Transportation of AE samples in accordance with 49 CFR 173.56(d), reference (A.1), is limited to 5.0 lb (2.3 kg) per shipment and requires an IHC.

4-5. Phosphorus Explosive Weight Contribution

When determining the net explosive weight (NEW) for AE containing WP, plasticized white phosphorus, or red phosphorus, the phosphorus weight is not included provided the phosphorus is not mixed with other substances and it is segregated from the explosive substances within the AE. Otherwise, the phosphorous weights are included in the NEW unless proven otherwise by test.

4-6. Hazard Classification of Unexploded Ordnance (UXO)

DoD or DOE may need to transport UXO over public transportation routes. Only UXO determined to be safe for transport by EOD personnel may be shipped. A copy of the EOD incident report must accompany all shipments. Transportation as HD 1.1 by military carrier operated by EOD personnel does not require an IHC. However, other means of transport requires an IHC to be assigned and a copy to accompany the shipment.

4-7. Hazard Classification of Munitions and Explosives of Concern (MEC) Other Than UXO

DoD or DOE may need to transport MEC other than UXO over public transportation routes. Only such MEC determined to be safe for transport by EOD personnel; by EOD-qualified U.S. Army Forces Command/20th Support Command/22nd Chemical Battalion personnel; or, when specifically authorized by a DoD Component, by UXO Technician III, UXO Safety Officer, UXO Quality Control Specialist, or Senior UXO Supervisor personnel, may be shipped. A copy of that written affirmation must accompany all shipments. Transportation as HD 1.1 by military carrier operated by DoD or DOE (military or civilian) personnel does not require an IHC. However, other transportion requires an IHC to be assigned and a copy to accompany the shipment.

4-8. Hazard Classification of Recovered Chemical Warfare Material (RCWM)

DoD or DOE may need to transport RCWM over public transportation routes. Only RCWM determined to be safe for transport by the Army Material Assessment Review Board may be shipped. All RCWM must be packaged in an overpack container specifically designed and approved by the Army and by the DOT for shipment. In addition, the specific notifications and concurrences required in 50 U.S.C. § 1512 must be met. Transportation as HD 1.2 or HD 6.1, as appropriate, by military carrier operated by DoD or DOE (military or civilian) personnel does not require an IHC. However, other means of transport requires an IHC to be assigned and a copy to accompany the shipment.

4-9. Hazard Classification of Material Potentially Presenting an Explosive Hazard (MPPEH) / Material Documented as an Explosive Hazard (MDEH)

DoD or DOE may need to transport MPPEH that has been determined to be MDEH over public transportation routes. Only MDEH determined to be safe for transport by EOD personnel; by EOD-qualified U.S. Army Forces Command/20th Support Command/22nd Chemical Battalion personnel; by UXO Technician III, UXO Safety Officer, UXO Quality Control Specialist, or Senior UXO Supervisor personnel; or by technically-qualified personnel, as certified by the commander or responsible leadership authority, may be shipped. A copy of the written safe to transport affirmation must accompany the shipment. Transportation as HD 1.1 by military carrier operated by DoD or DOE (military or civilian) personnel does not require an IHC. For classifications other than HD 1.1, a written affirmation of safe to ship and a copy of an IHC, based on material characteristics, packaging arrangements, and known or estimated explosives present, must accompany the shipment.

4-10. Storage and Transportation without DoD/DOE IHC or FHC

a. Occasions may arise in which it is necessary to store on DoD and DOE installations, or offer for transportation by military or commercial carriers, AE that do not have either a DoD or DOE IHC or FHC assigned. Other types of hazard classifications may be used in these situations in accordance with the options and conditions described below. These options do not apply to AE that are standard DoD or DOE inventory items released for operational service. They also are not intended to effect relief from Service safety requirements regarding approval to purchase, handle, use, or store non-DoD or non DOE AE. The options are:

(1) DoDC may permit storage and transportation of AE in accordance with IHC assigned by DOE, and conversely, DOE may use DoD IHC. A copy of the IHC must be carried with the shipping papers on board each conveyance being used to transport AE under that IHC. A copy of the IHC must also be kept on file at the installation where AE are stored.

(2) DoDC may permit storage and transportation of AE in accordance with FHC assigned by DOE, and conversely, DOE may use DoD FHC. For storage using a DOE FHC, DoDC installation records will reflect the EX number, HD, CG, and NEW, for each AE stored.

(3) DoDC and DOE may permit storage and transportation of commercial and foreign owned explosive products in accordance with the DOT hazard classification obtained by the manufacturer or

foreign authority. For storage using a DOT hazard classification, DoDC installation records will reflect the EX number, HD, CG, and NEW for each product stored. The AE classification assigned to cartridges by the manufacturer as prescribed in 49 CFR 173.56(h), reference (A.1), may also be used for storage and transportation. The following exceptions and conditions apply to storage with a DOT classification obtained by the manufacturer or foreign authority:

(a) Commercial and consumer fireworks must be stored in accordance with procedures established by the DoDC hazard classifier.

(b) Black powder received as HD 4.1 must be stored as HD 1.1D.

(c) Smokeless powder received as HD 4.1 must be stored as HD 1.3C.

(d) Cartridges, small arms received as Other Regulated Material-category D (ORM-D) must be stored as HD 1.4C within the DoD.

(e) AE received as HD 1.5D must be stored as HD 1.1D.

(f) AE received as HD 1.2 must be stored as HD 1.2.1 in accordance with the CG assigned by DOT.

(g) The NEWQD of AE hazard classified by DOT or DOE as HD 1.4S or as N.R. is zero. For all other such AE, the NEWQD will equal the NEW unless testing allows a reduction (see para 6-2).

(h) All AE must be stored or transported in the same or equivalent packaging in which the manufacturer or foreign authority offers the AE for transportation. As a minimum, the packaging must comply with the packaging instruction associated with the hazard classification assigned.

(4) In manufacturing, research, development, test, or evaluation environments, the DoDC may permit storage and on-base or on-post transportation of AE in accordance with a hazard classification assigned by the local installation. The Service Hazard Classifier (see para 3-4) will establish procedures for assigning and documenting the local hazard classification and CG. The AE must not be offered for transportation from the installation until the necessary DoD IHC is received. (NOTE: Traversing a public roadway between gates or sites on the same installation is considered on-base or on-post transportation provided the transportation is in a DoD-owned vehicle operated by DoD personnel.)

(5) The DoDC may permit foreign-owned AE brought onto DoD installations to support multi-national military training, exercises, or operations to be stored in accordance with the hazard classifications assigned by the appropriate foreign Competent Authority in accordance with procedures established by the Service Hazard Classifier (see para 3-4). The DoDC installation records will reflect the HD, CG, and NEW for each AE stored as well as other documentation required by the Service procedure.

(6) Hazard classification documentation for foreign AE approved by a coalition forces' Competent Authority is acceptable for U.S. military air transportation between foreign departure points and foreign destinations, regardless of whether an intermediate stopover in the U.S. occurs. Such approval documentation is similarly acceptable for in-transit storage of coalition forces' AE on U.S. installations worldwide. The coalition approval documentation must, at a minimum, include in English: the assigned PSN, UN number, HD and CG, packing group (if required), the quantity of articles per package and the NEW per article. Copies of the coalition hazard classification approval documentation must accompany U.S. military air shipments and be kept on file at installations where coalition forces' AE are temporarily stored during transit. AE classed HD 1.2 by coalition forces Competent Authorities will be managed as HD 1.2.1 when sited on real property controlled by the U.S., or when possessed by U.S. military forces.

b. When commercial launch vehicles fueled by liquid propellants are located at DoD launch facilities, the explosive equivalents of the fuel combinations listed in DoDM 6055.09-M, reference (A.3), may be used instead of the total weight of fuel in the vehicle for quantity distance (QD) purposes. Lesser weights, based on launch vehicle failure analyses, may be used with the approval of the applicable Service Hazard Classifier and the Chairman, DDESB. Likewise, a commercial solid rocket booster or booster section located at a DoD launch facility may be stored using a NEWQD less than 100% of the propellant weight (PW) only with approval of the applicable Service Hazard Classifier and the Chairman, DDESB.

4-11. Reactive Materials

The weight of reactive materials (e.g., combustible cases and reactive liners) are included in the NEW unless proven that they do not contribute to the reaction. The contribution to the NEWQD will be addressed on a case-by-case basis.

CHAPTER 5 Hazard Classification by Test

5-1. Introduction

This chapter provides DoD and DOE preferred procedures for conducting AE hazard classification assignment tests. These AE hazard classification test procedures have been harmonized with the UN Test and Criteria Manual, reference (A.6), AOP-7, reference (A.17), and applicable NATO STANAGs, references (A.20) through (A.24). This harmonization process has resulted in test procedures which are no longer identical to the UN Test and Criteria Manual, reference (A.6). Hazard classification tests conducted in accordance with UN Test and Criteria Manual, reference (A.6), are also acceptable with the exception of the Single Package (see para 5-5*c*) and SR (see para 5-5*d*) tests. These two tests are to be conducted in accordance with this chapter to ensure the appropriate donor initiation stimulus is used. On occasion DoD or DOE may need to classify AE as HD 1.5. When this need arises, UN Series 3 tests and UN Series 5 tests are required. Test procedures and assessment criteria are provided in paragraph 5-3 for UN Series 3 and in reference (A.6) for UN Series 5.

a. Methodology. Initial hazard classification testing (i.e., UN Series 3 and Series 4) is conducted to characterize the safety of explosive substances. Subsequent testing is conducted on AE (i.e., articles) containing safe explosives substances (e.g., not forbidden for transport due to instability or sensitivity) to assign the appropriate hazard classification. Figure 5-1 illustrates the preferred substance and AE hazard classification tests. (NOTE: Contractors and testing organization should contact the appropriate Service Hazard Classifier (see para 3-4) or DOE Hazard Classifier for clarification on the use of this figure.)

b. Test Protocols. The following sections provide a description of the materials, procedures and evaluation criteria for each preferred test. If appropriate, alternate tests and references are also listed. (NOTE: A negative (–) result in a test indicates a pass response and a positive (+) result indicates a fail response.)

*c. Types of Response***.** These response descriptors are to be used to determine the response type of munitions tested in accordance with this TB and STANAG 4439 (A.26). This determination requires experience and engineering judgment. For example, munitions vary greatly in size, type, packaging and energetic materials; these differences need to be taken into account. In addition, the scattering of debris caused by the mechanical momentum transfer imparted by the test procedure and not the reaction of the test item can be factored out of the evidence used to assign a response level. For a reaction to be judged a particular type, the Primary Evidence for that type would need to be present. The entire (both primary and secondary) body of evidence must be weighed carefully and used in its entirety to assess the reaction. The secondary evidence provides other indicators that may be present. The six response descriptors are described in Table 5-1.

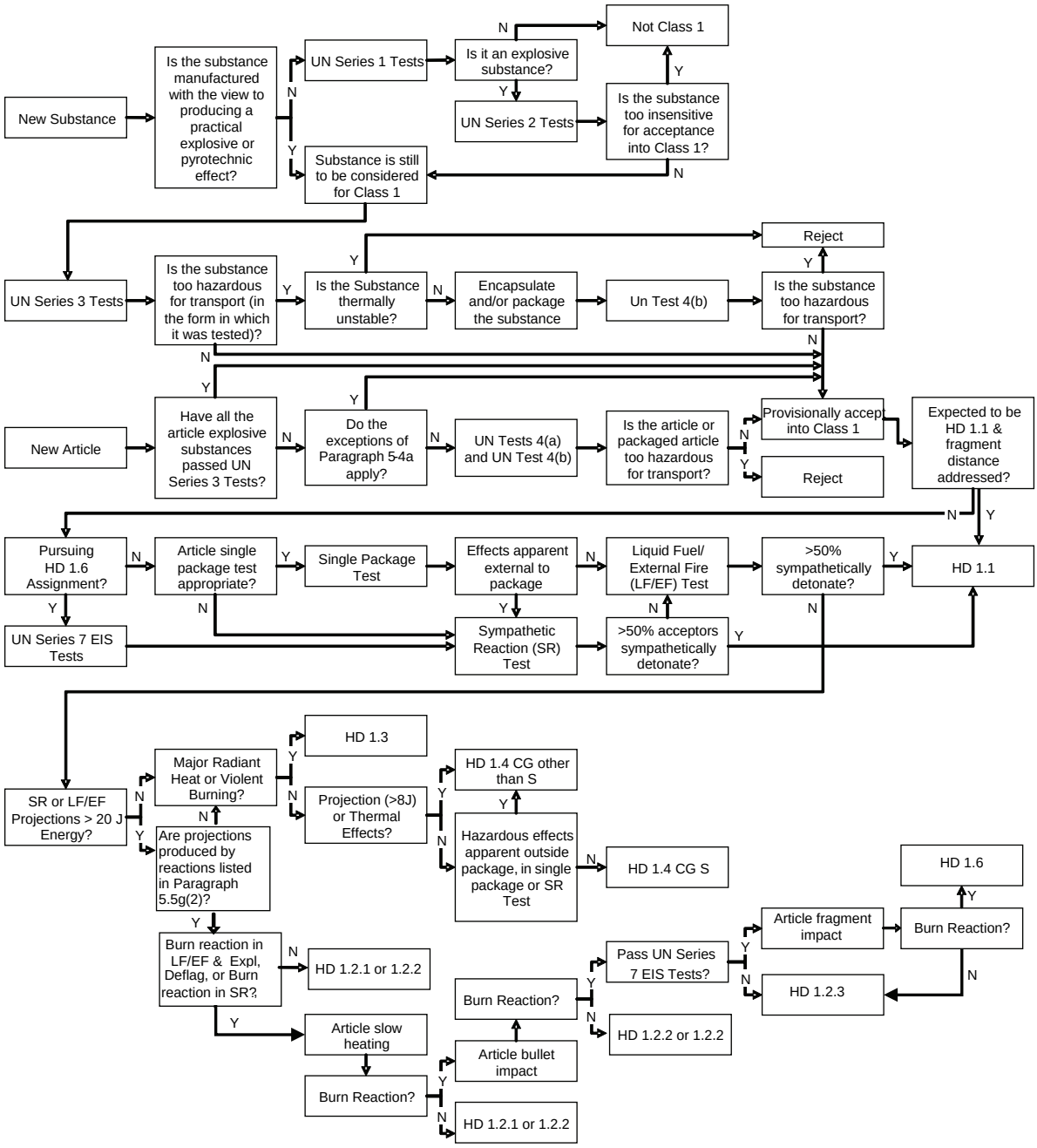

NOTE: Typical methodology illustrated. Specific guidance should be obtained from the appropriate Service Hazard Classifier or DOE Hazard Classifier.

NOTE: For assignment of UN 0323, 0366, 0441, 0445, 0455, 0456, 0460 and 0500, see reference (A.5), three unconfined single package tests [UN Test 6(d)] are required. These UN designations shall only be used if the results of Test series 6 (d) have demonstrated that any hazardous effects arising from functioning are confined within the package.

Figure 5-1 DoD and DOE AE Hazard Classification Guidance for Substances and Articles

Table 5-1
Response Descriptors.

Response Level	Observed or Measured Effects				
	Energetic Materials (EM)	Case	Blast	Fragment or EM projection	Other
Type I (detonation)	Prompt consumption of all EM once the reaction starts	**(P) Rapid plastic deformation of the metal casing contacting the EM with extensive high shear rate fragmentation**	**(P) Shock wave with magnitude & timescale = to a calculated value or measured value from a calibration test**	Perforation, fragmentation and/or plastic deformation of witness plates	Ground craters of a size corresponding to the amount of EM in the munition
Type II (partial detonation)		**(P) Rapid plastic deformation of some, but not all, of the metal casing contacting the EM with extensive high shear rate fragmentation**	**(P) Shock wave with magnitude & timescale < than that of a calculated value or measured value from a calibration test** Damage to neighboring structures	Perforation, plastic deformation and/or fragmentation of adjacent metal plates. Scattered burned or unburned EM.	Ground craters of a size corresponding to the amount of EM that detonated.
Type III (explosion)	**(P) Rapid combustion of some or all of the EM once the munition reaction starts**	**(P) Extensive fracture of metal casings with no evidence of high shear rate fragmentation resulting in larger and fewer fragments than observed from purposely detonated calibration tests**	Observation or measurement of a pressure wave throughout the test arena with peak magnitude << than and significantly longer duration that of a measured value from a calibration test	Witness plate damage. Significant long distance scattering of burning or unburned EM.	Ground craters.
Type IV (deflagration)	**(P) Combustion of some or all of the EM**	**(P) Rupture of casings resulting in a few large pieces that might include enclosures or attachments.**	Some evidence of pressure in the test arena which may vary in time or space.	**(P) At least one piece (casing, enclosure or attachment) travels beyond 15m with an energy level > 20J.** Significant scattered burning or unburned EM, generally beyond 15 m.	**(P) There is no primary evidence of a more severe reaction and there is evidence of thrust capable of propelling the munition beyond 15m.** Longer reaction time than would be expected in a Type III reaction.
Type V (burn)	**(P) Low pressure burn of some or all of the EM**	**(P) The casing may rupture resulting in a few large pieces that might include enclosures or attachments.**	Some evidence of insignificant pressure in the test arena.	**(P) No item (casing, enclosure, attachment or EM) travels beyond 15m with an energy level > 20J. (P) A small amount of burning or unburned EM relative to the total amount in the munition may be scattered, generally within 15m but no farther than 30m.**	**(P) No evidence of thrust capable of propelling the munition beyond 15m.** For a rocket motor a significantly longer reaction time than if initiated in its design mode.
Type VI (no reaction)	**(P) No reaction of the EM without a continued external stimulus. (P) Recovery of all or most of the unreacted EM with no indication of a sustained combustion.**	**(P) No fragmentation of the casing or packaging greater than that from a comparable inert test item.**	None	None	None

Primary evidence **(P),** shown in **Bold** text, would almost always be observed and would be definitive of the reaction type.
Secondary evidence could be observed, but its lack would not preclude that reaction type.

(1) *Detonation (Type I).* Detonation (Type I) is the most violent type of munition reaction where the energetic material is consumed in a supersonic decomposition. Primary evidence of a Type I reaction is the

observation or measurement of a shock wave with the magnitude and timescale of a purposely detonated calibration test or calculated value and the rapid plastic deformation of the metal casing contacting the energetic material with extensive high shear rate fragmentation. Secondary evidence may include the perforation, fragmentation and-or plastic deformation of a witness plate and ground craters of a size corresponding to the amount of energetic material in the munition.

(2) *Partial Detonation (Type II*). Partial Detonation (Type II) is the second most violent type of munition reaction where some of the energetic material is consumed in a supersonic decomposition. Primary evidence of a Type II reaction is the observation or measurement of a shock wave with magnitude less than that of a purposely detonated calibration test or calculated value and the rapid plastic deformation of some, but not all, of the metal casing contacting the energetic material with extensive high shear rate fragmentation. Secondary evidence may include scattered burned or unburned energetic material; the perforation, fragmentation and-or plastic deformation of a witness plate; and ground craters.

(3) *Explosion (Type III).* Explosion (Type III) is the third most violent type of munition reaction with sub-sonic decomposition of energetic material and extensive fragmentation. Primary evidence of a Type III reaction is the rapid combustion of some or all of the energetic material once the munition reaction starts and the extensive fracture of metal casings with no evidence of high shear deformation resulting in larger and fewer fragments than observed from purposely detonated calibration tests. Secondary evidence may include significant long-distance scattering of burning or unburned energetic material; witness plate damage; the observation or measurement of overpressure throughout the test arena with a peak magnitude significantly less than and significantly longer duration than that of a purposely detonated calibration test; and ground craters.

(4) *Deflagration (Type IV).* Deflagration (Type IV) is the fourth most violent type of munition reaction with ignition and burning of confined energetic materials which leads to a less violent pressure release. Primary evidence of a Type IV reaction is the combustion of some or all of the energetic material and the rupture of casings resulting in a few large pieces that might include enclosures and attachments. At least one piece (e.g., casing, packaging or energetic material) travels (or would have been capable of travelling) beyond 15m and with an energy level greater than 20J based on the distance versus mass relationships in AOP-39 (A.27). A reaction is also classified as Type IV if there is no primary evidence of a more severe reaction and there is evidence of thrust capable of propelling the munition beyond 15m. Secondary evidence may include a longer reaction time than would be expected in a Type III reaction; significant scattered burning or unburned energetic material, generally beyond 15m; and some evidence of pressure in the test arena which may vary in time or space.

(5) *Burn (Type V).* Burn (Type V) is the fifth most violent type of munition reaction where the energetic material ignites and burns non propulsively. Primary evidence of a Type V reaction is the low pressure burn of some or all of the energetic material. The casing may rupture resulting in a few large pieces that might include enclosures and attachments. No piece (e.g., casing, packaging or energetic material) travels (or would have been capable of travelling) beyond 15m and with an energy level greater than 20J based on the distance versus mass relationships in AOP-39 (A.27). There is no evidence of thrust capable of propelling the munition beyond 15m. A small amount of burning or unburned energetic material relative to the total amount in the munition may be scattered, generally within 15m but no more than 30m. Secondary evidence may include some evidence of insignificant pressure in the test arena and for a rocket motor a significantly longer reaction time than if initiated in its design mode.

(6) *No Reaction (Type VI).* No Reaction (Type VI) is the least violent type of munition response where any reaction is self-extinguished immediately upon removal of the external stimulus. Primary evidenc**e** of a Type VI reaction is no reaction of the energetic material without a continued external stimulus; the recovery of all or most of the energetic material with no indication of sustained combustion; and no fragmentation of the casing or packaging greater than from a comparable inert test item. There is no secondary evidence.

d. Classification Authority. In some cases, the collective experience of the Service Hazard Classifiers and Chairman, DDESB may indicate that a reaction of AE presents hazards different than would be assessed by strictly applying the criteria and method of assessing test results. The Service Hazard Classifiers and Chairman, DDESB have the authority to apply such judgment and determine the appropriate hazard classification.

5-2. UN Series 1 and Series 2 (New Substance Tests)

a. UN Series 1 and Series 2, reference (A.6), tests presented in Table 5-2 may be used to demonstrate a new DoD or DOE substance is excluded from Class 1 provided the substance is not manufactured to produce a practical explosive or pyrotechnic effect. If either UN Series 1 or 2 is conducted, at least one shock, one heating under confinement and one ignition under confinement test must be included. (Note: not all the tests in Table 5-2 are discussed in this document some are included by referencing A.6)

(1) UN Series 1 tests are conducted to answer the question "Is it an explosive substance?"

(2) UN Series 2 tests are conducted to answer the question "Is the substance too insensitive for acceptance into Class 1?"

Table 5-2
Tests to Demonstrate Substance Explosive or Pyrotechnic Effect

UN Test No.	Test Types	Name of Test	Reference
1(a)	Shock	UN Gap test [1,2,4]	para 5-2*b*
1(b)	Heating under confinement	Koenen test [1,2]	Ref. A.6
1(c)(i)	Ignition under confinement	Time/pressure test [1]	Ref. A.6
1(c)(ii)		Internal Ignition test [2,3,4]	para 5-2*c*
2(a)	Shock	UN Gap test [1,2,4]	para 5-2*d*
2(b)	Heating under confinement	Koenen test [1,2]	Ref. A.6
2(c)(i)	Ignition under confinement	Time/pressure test [1]	Ref. A.6
2(c)(ii)		Internal Ignition test [2,3,4]	para 5-2*e*

NOTES: 1. UN recommended test. 2. DoD recommended test. 3. UN alternate test. 4. DOE recommended test.

b. UN Test 1(a)—Gap test for solids and liquids.

(1) *Introduction*. This test is used to measure the ability of a solid or liquid substance, confined in a steel tube, to propagate a detonation.

(2) *Apparatus and materials*. Figure 5-2 and Figure 5-3 present the test configurations for solid and liquid substances, respectively.

(a) Solids.

1. The test sample is loaded in a steel cylinder. Spacers are used to separate a mild steel witness plate from the sample tubing at the bottom end. The top of the cylinder is closed with two layers of polyethylene sheets held in place with gum rubber bands and polyvinylchloride electrical insulating tape.

2. A continuous velocity of detonation probe may be used as an option to measure the substance detonation velocity. (NOTE: Typically, the detonation probe is made of thin aluminum tube with an axial resistance wire having a resistance of 7.6 ohms/in (3.0 ohms/cm) that is mounted on the wall of the sample tubing. The outer tubing of the probe is crimped against the inner wire at the lower end forming a resistor. As a detonation wave moves down the tubing, the outer wall crushes against the inner wire, shortening the effective length and changing the resistance of the wire. If a constant current (usually 0.06 amperes) is made to flow between the outer and inner conductors, the voltage between them is proportional to the effective length and can be recorded as a function of time. The slope of the voltage versus time recorded is proportional to the velocity of the shock wave.)

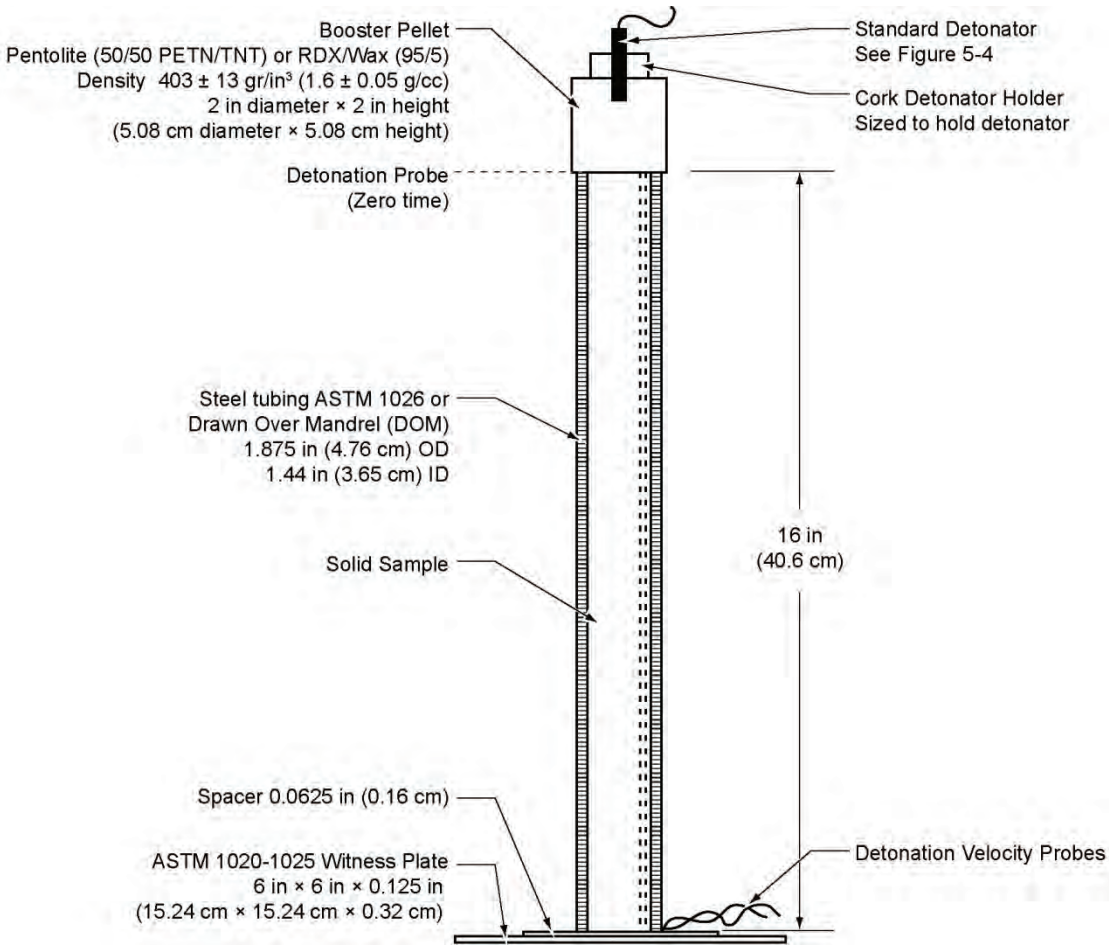

(shown with optional detonation velocity probes)

NOTE: An air gap of at least 2 in (5.08 cm) is required between the witness plate and any solid surface to which the witness plate might be abutted.

Figure 5-2 Gap Test Configuration for Solid Substances (UN Test 1(a))

(b) Liquids.

1. The apparatus for liquids is the same as that for solids except that the bottom of the tube must be sealed to contain the liquid. The recommended method is to fuse a 0.002 to 0.003 in (0.05 to 0.08 mm) thick sheet (thicker sheets may adversely affect results) of fluorocarbon or other compatible plastic to the tube. However, any effective technique to prevent leaks may be used.

2. For liquid substances that are potentially sensitive to the adiabatic compression of entrapped gas, air should be injected near the bottom of the sample at the time of test. Air should be supplied at a pressure of 4.4 to 14.5 psi (30 to 100 kPa) to obtain a flow rate of 7.1×10^{-4} ft^3/sec (1.2 liters/minute). (NOTE: The bubbles may be created by a small plastic frit or by holes punched in a loop of vinyl plastic tubing.) The tubing supplying the frit or forming the loop should be about 0.08 in (2.0 mm) outer diameter (OD) (e.g., medical catheterization tubing). Holes may be made by perforating the tubing forming the loop with a 0.051 in (1.3 mm) diameter needle and allowing the elastic nature of the tubing to contract the hole. The number of holes and amount of bubbling should be consistent for all tests of the substance or for a sufficient number of tests to establish repeatability. The submerged end to the bubbler should be plugged. The air supply tubing may be introduced from the top of the sample tube or through a hole through the side near the bottom that is sealed. Where it is suspected the substance may react with the metal of the tube, the tube interior should be coated with compatible material (e.g., fluorocarbon resin spray).

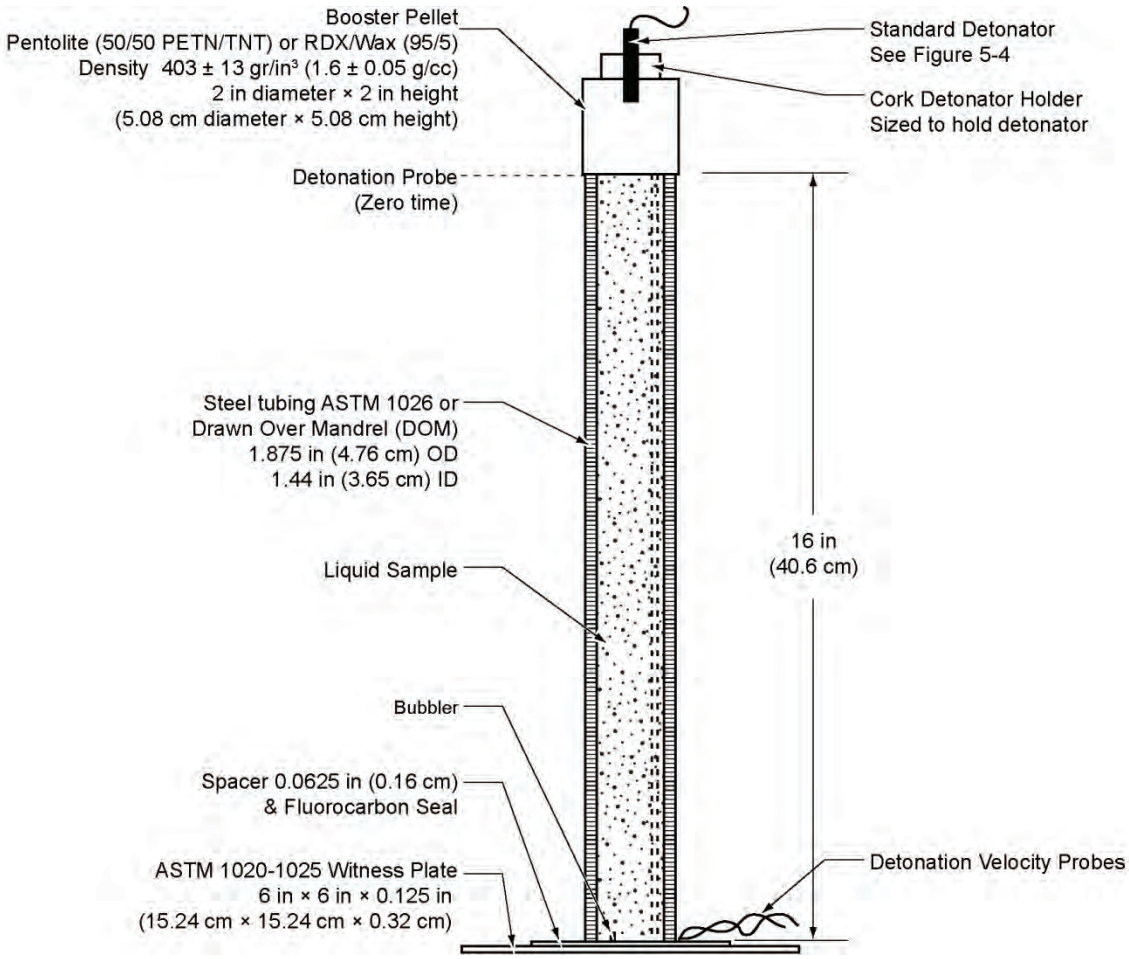

(shown with optional detonation velocity probes)

NOTE: An air gap of at least 2 in (5.08 cm) is required between the witness plate and any solid surface to which the witness plate might be abutted. .

Figure 5-3 Gap Test Configuration for Liquid Substances (UN Test 1(a))

(3) Procedure.

(a) The test should be conducted under ambient conditions.

(*b)* Load solid substances to the top of the steel tube and tap the cylinder until settling is imperceptible. Determine loaded density using the mass of the substance loaded and internal volume of the tube. The density should be as close as possible to the shipping density.

(*c)* Liquid samples should be loaded to within 0.0625 in (1.6 mm) of the top of the tube.

(d) Place a 2550 gr (165 g) pentolite (50/50 PETN/TNT) or RDX/Wax (95/5) booster pellet in intimate contact with the bottom of the test sample.

(e) Position a standard detonator (see Figure 5-4) in the center of a cork holder such that the detonator is in contact with the booster.

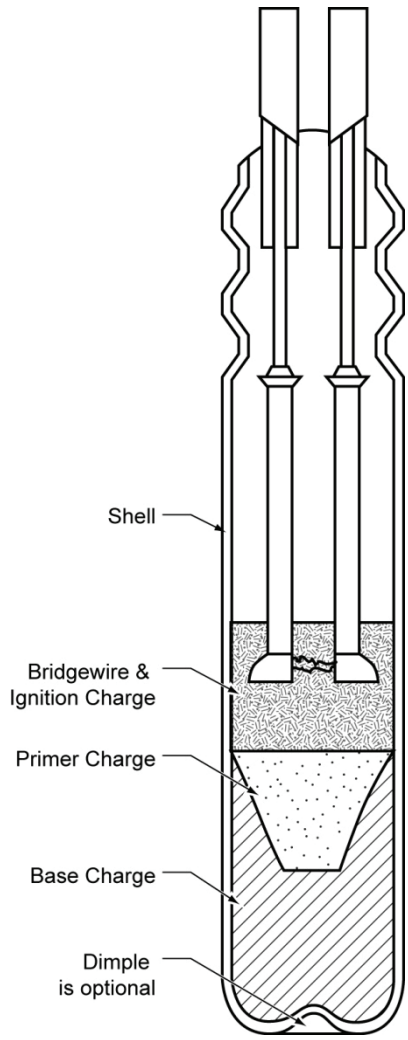

NOTES: 1. Base charge weight ≥ 6.9 gr (450 mg)
2. Base charge detonation velocity ≥ 22,970 ft/sec (7 mm/μs)
3. Diameter 0.276 in (7.0 mm) to 0.299 in (7.6 mm)

Figure 5-4 Standard Detonator

(f) Initiate the detonator.

(g) Two trials are required.

(4) *Criteria and method of assessing results.* The result is positive (+) and the substance is a candidate for Class 1 if either of the criteria below occur on either of the trials:

(a) A hole is punched through the witness plate.

(b) The sample tube is fragmented completely.

c. UN Test 1(c)(ii)—Internal Ignition test.

(1) *Introduction.* The test is used to determine the tendency of the substance to undergo transition from deflagration to detonation.

(2) *Apparatus and material.* The experimental arrangement is shown in Figure 5-5. The substance sample is contained in a steel pipe that is capped at both ends. A 308 gr (~20 g) black powder igniter is located at the center of the pipe. (NOTE: The igniter assembly is a cellulose acetate cylinder held together by two layers of nylon filament reinforced cellulose acetate tape. The igniter assembly contains a nickel-chromium alloy wire loop. The loop is attached to two insulated tinned copper lead wires that are installed through holes in the pipe that are sealed with epoxy resin.)

(3) Procedure.

(a) Load the pipe to a height of 9 in (230 mm).

(b) Insert the igniter into the center of the pipe, pull the leads taut and seal the lead exit from the pipe with epoxy resin.

(c) Load the remainder of the substance into the pipe to within 0.0625 in (1.6 mm) of the top and screw on the top cap. (NOTE: The substance should be tested at its normal shipping density.)

(d) Fire the igniter by applying a 20 V, 15 ampere current.

(e) Conduct three trials.

(4) Criteria and method of assessing results.

(a) The result is positive (+) and the substance is a candidate for Class 1 if either the pipe or one of the end caps is ruptured into at least two distinct pieces.

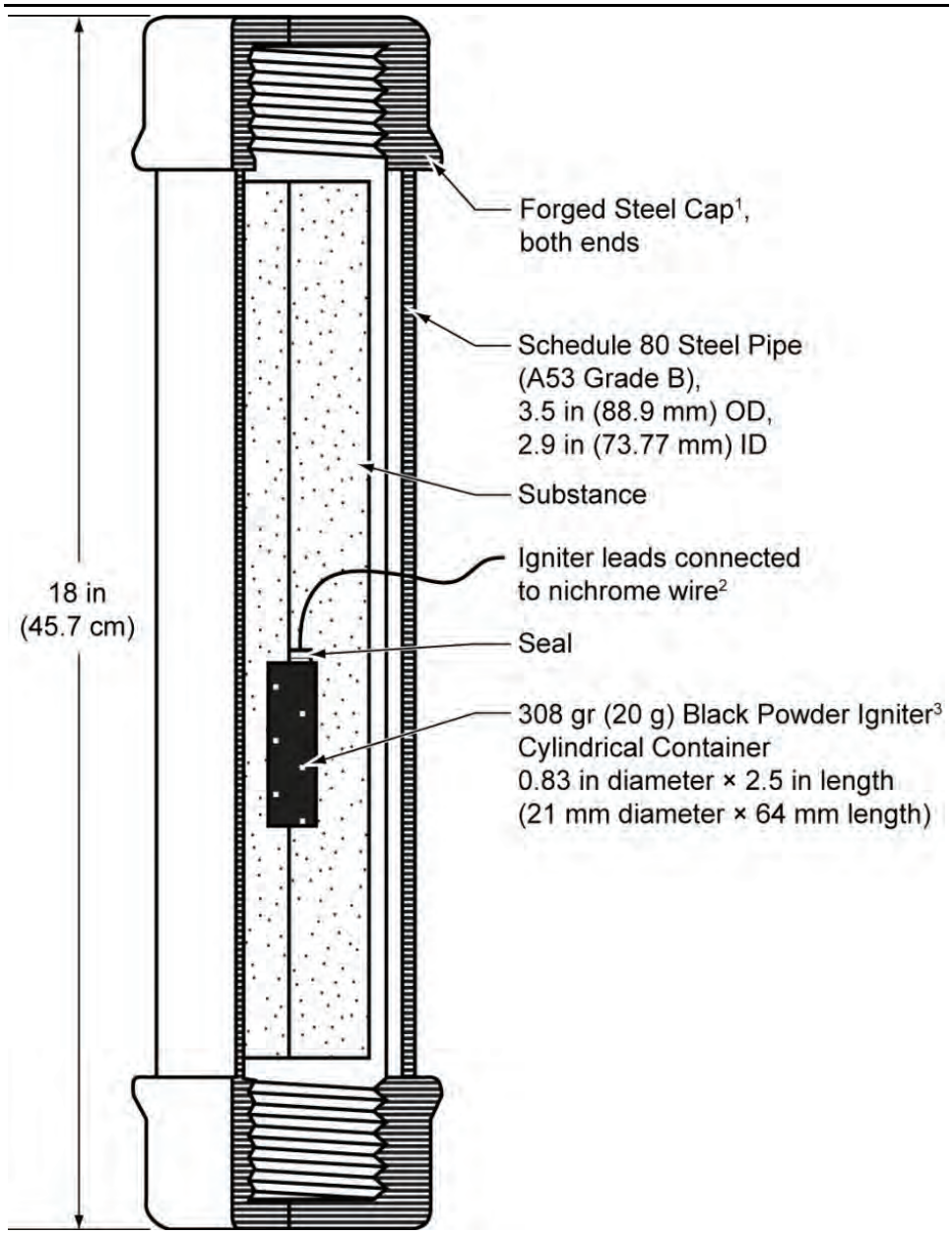

NOTES: 1. ASME B16.11, "Forged Fittings, Socket-Welding and Threaded," American Society of Mechanical Engineers, New York, NY (latest version).

2. Nichrome wire – 25.4 mm long (1.0 in), 0.3 mm diameter (0.12 in), 0.35 ohm. Leads – tinned copper 0.66 mm diameter (0.026 in) with 1.3 mm diameter (0.051 in) outside diameter insulation.

3. Black Powder – 100% passed through a No. 20 sieve, 0.84 mm (0.033 in) and 100% retained by a No. 50 sieve, 0.297 mm (0.0117 in).

Figure 5-5 Internal Ignition Test Configuration (UN Test 1(c) (ii))

(b) The result is negative (–) and the substance may not be a candidate for Class 1 if the pipe is either split longitudinally (i.e., ruptured but no projections are produced), or the end caps are distorted but not fragmented.

d. UN Test 2(a)—Gap test for solids and liquids.

(1) *Introduction*. The test demonstrates whether a solid or liquid substance will propagate a detonation through a polymethyl methacrylate (PMMA) gap.

(2) *Apparatus and materials*. The test is identical to the UN Test 1(a) (see para 5-2*b*(2) and Figure 5-2 and Figure 5-3) except that a 2.0 in (5.08 cm) diameter by 2.0 in (5.08 cm) thick PMMA (trade name Plexiglas) buffer is installed between the booster and substance sample as shown in Figure 5-6 (solid substance) and Figure 5-7 (liquid substance).

(3) *Procedure*. The procedure is the same as that described for paragraph 5-2*b*(3).

(4) *Criteria and method of assessing results*. The result is positive (+) and the substance is a candidate for Class 1 if either of the criteria below occurs on either of the trials:

(a) A hole is punched through the witness plate.

(b) The sample tube is fragmented completely.

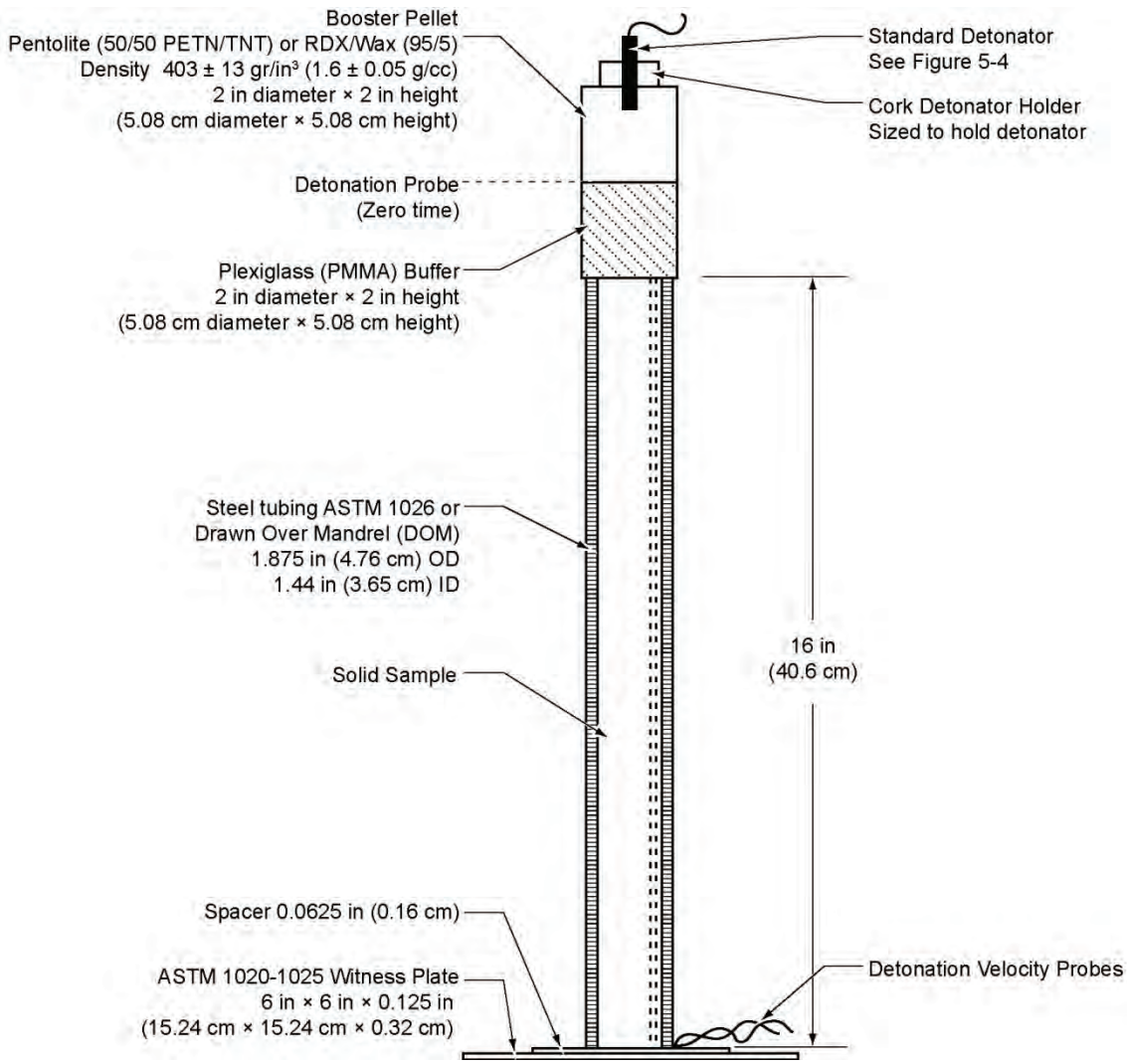

(shown with optional detonation velocity probes)

NOTE: An air gap of at least 2 in (5.08 cm) is required between the witness plate and any solid surface to which the witness plate might be abutted.

Figure 5-6 Gap Test Configuration for Solid Substances (UN Test 2(a))

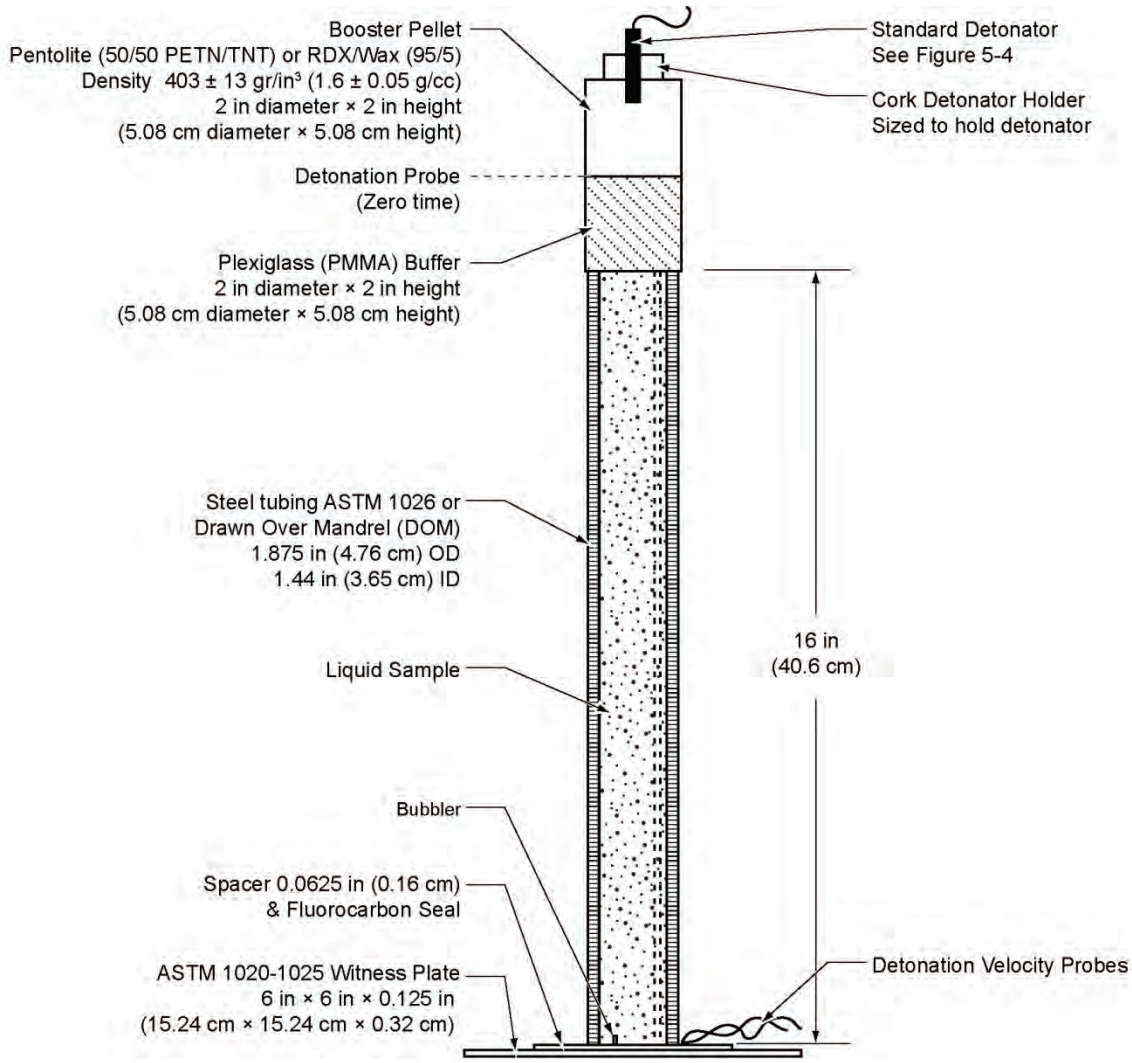

(shown with optional detonation velocity probes)

NOTE: An air gap of at least 2 in (5.08 cm) is required between the witness plate and any solid surface to which the witness plate might be abutted.

Figure 5-7 Gap Test Configuration for Liquid Substances (UN Test 2(a))

e. UN Test 2(c)(ii)—Internal Ignition test.

(1) *Introduction*. The test is used to determine the tendency of the substance to undergo transition from deflagration to detonation.

(2) *Apparatus and materials*. The test uses the same apparatus as UN Test 1(c)(ii) (see para 5-2*c*(2)) with the exception that a 154 gr (10 g) black powder igniter is used rather than 308 gr (~20 g).

(3) *Procedure*. The procedure is identical to paragraph 5-2*c*(3).

(4) Criteria and method of assessing results.

(a) The result is positive (+) and the substance is a candidate for Class 1 if either the pipe or one of the end caps is ruptured into at least two distinct pieces that are separated from the pipe.

(b) The result is negative (–) and the substance may not be a candidate for Class 1 if the pipe is either split longitudinally or the end caps are distorted but not fragmented.

5-3. UN Series 3 Tests (New Substance Tests)

a. The classification procedure for any new substance that can produce a practical explosive or pyrotechnic effect begins with the application of the UN Series 3 tests listed in Table 5-3. At least one test of each type must be performed.

Table 5-3
Substance Hazard Classification Tests

UN Test No.	Type of Test	Name of Test	Reference
3(a)(i)	Impact	Bureau of Explosives Impact Machine[2]	Paragraph 5-3*b*
3(a)(ii)		BAM Fallhammer[1]	Reference (A.6)
3(a)(iii)		Rotter test[3]	Reference (A.6)
3(a)(iv)		30 kg Fallhammer test[3]	Reference (A.6)
3(a)(v)		Modified type 12 impact tool[3]	Reference (A.6)
3(a)(vi)		Impact Sensitivity test[3]	Reference (A.6)
N/A		LLNL Small-Scale Drop-Hammer Impact Sensitivity[4]	Reference (A.13)
N/A		Type 12 Impact Tool[5]	Reference (*A.17*)
N/A		Technoproducts/Olin Mathieson[7,8]	Reference (A.17)
N/A	Friction[6]	ABL Friction[2]	Paragraph 5-3*c*
3(b)(i)		BAM Friction Apparatus[1,2]	Paragraph 5-3*d*
3(b)(ii)		Rotary Friction[3]	Reference (A.6)
3(b)(iv)		Friction Sensitivity[3]	Reference (A.6)
N/A		LLNL Small-Scale Friction Sensitivity (BAM)[4]	Reference (A.14)
3(c)	Thermal Stability	Thermal Stability test at 75° C[1,2]	Paragraph 5-3*e*
N/A		Chemical Reactivity Test for Thermal Stability[4]	Reference (A.15)
N/A		Vacuum Stability Test[9]	Reference (A.18)
3(d)	Ignition without confinement	Small-scale Burning test[1,2,4]	Paragraph 5-3*f*

NOTES: 1. UN recommended test.
2. DoD recommended test.
3. UN alternate test.
4. DOE recommended test.
5. DoD alternate test (A substance with sensitivity equal or greater than RDX, Type I or II, Class 5 in this test is too sensitive for transport).
6. Friction tests need not be conducted on liquid substances.
7. For solids, a substance with sensitivity equal or greater than RDX, Type I or II, Class 5 in this test is too sensitive for transport.
8. For liquids, a substance with sensitivity equal or greater than n-propyl nitrate is too sensitive for transport.
9. A substance with more than 2 ml gas evolved per gram of explosive per 48 hours at 100°C is too unstable for transport. This criterion comes from the U.S. section of Reference A.17.

(1) These tests are conducted to answer the question "Is the substance thermally stable and is the substance too hazardous for transport in the form tested?"

b. UN Test 3(a)(i)—Bureau of Explosives Impact Machine.

(1) *Introduction*. This test measures the sensitivity of solid or liquid substances to mechanical impact.

(2) *Apparatus and materials*. Figure 5-8 shows the apparatus for both solid and liquid substances. A weight falls freely between two parallel cylindrical guide rods from pre-selected heights onto a plunger-and-plug assembly. The assembly is in contact with the substance which is placed in an anvil assembly that is confined in a cylindrical case.

(3) Procedure.

(a) Solids.

1. Load 154 gr (10 mg) of the substance in the form in which it will be shipped onto the die.

2. Place the anvil and die in the sample housing and screw on the case.

3. Insert the plug and plunger on top of the sample.

4. Raise the drop weight to the desired height and release.

5. Ten trials should be conducted at the specified drop height for each test substance. (NOTE: Standard reference materials (e.g., RDX, Type I or II, Class 5 for solids or nitroglycerin for liquids) must have been tested within three months to provide comparative data. Report the standard substance results along with the sample test results.)

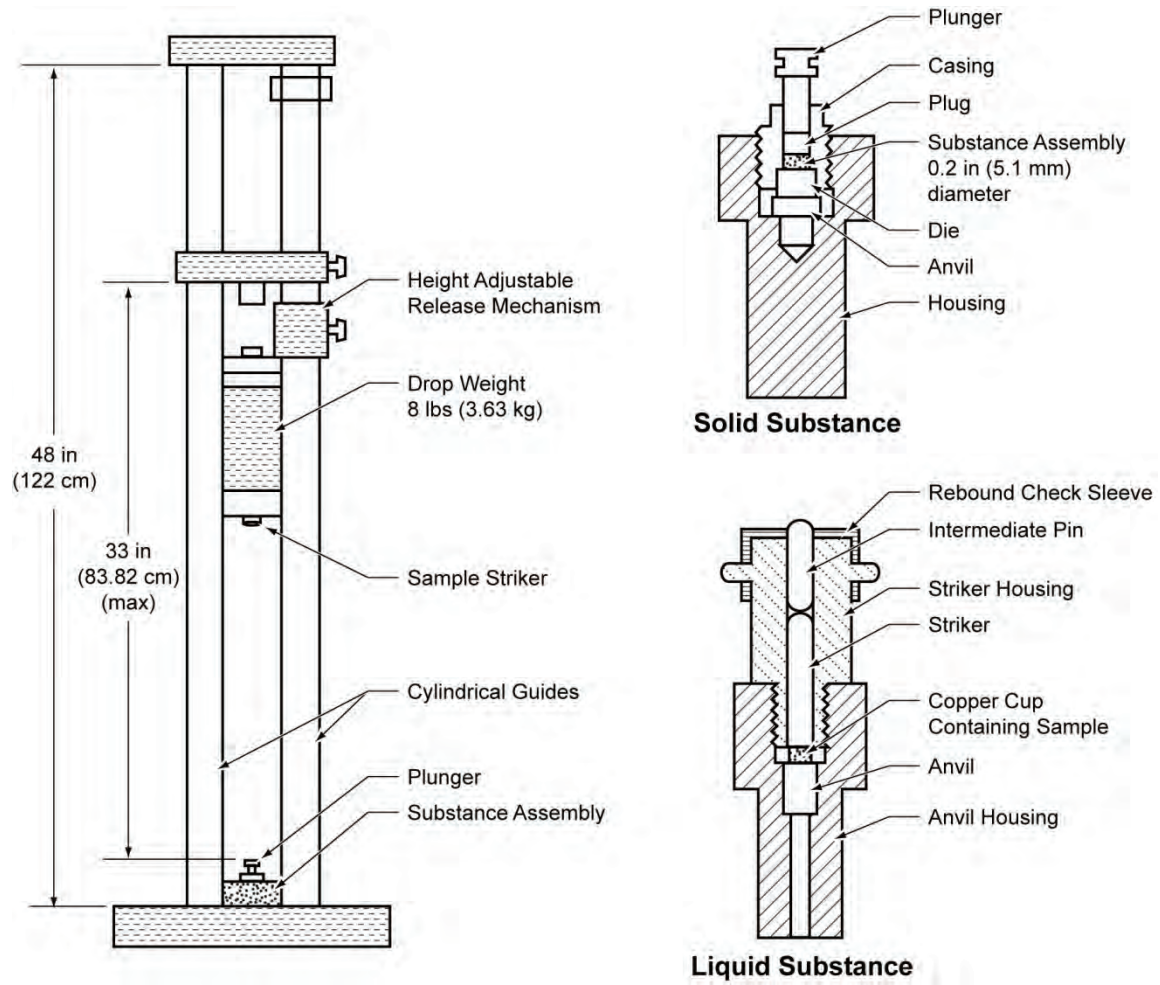

NOTE: 1. Hardened tool steel (Rockwell C 50 – 55), 0.00003 in (0.8μ) finish on mating surfaces and surface in contact with the sample.

Figure 5-8 Bureau of Explosives Impact Machine (UN Test 3(a)(i))

(b) Liquids.

1. Assemble the rebound sleeve, the intermediate pin, and the striker into the striker housing.

2. Place a copper cup in a cup positioning block (not shown in Figure 5-8) and place one drop of the liquid substance in the cup. (NOTE: A piece of filter paper may be used to absorb the liquid substance in the cup.)

3. Install the housing and its components over the top of the cup positioning block. (NOTE: The end of the striker slips partway into the cup, but is prevented by the cup positioning block from actually touching the liquid in the cup. The cup is held on the end of the striker by friction, when the striker housing is lifted from the positioning block.)

4. Screw the striker housing onto the anvil housing. (NOTE: The dimensions of the tools are such that the bottom of the copper cup just touches the anvil when the striker housing is screwed in hand-tight.)

5. Install the entire assembly at the sample assembly position shown in Figure 5-8.

6. Ten trials should be conducted at 10 in (25.40 cm) drop height.

(4) Criteria and method of assessing results.

(a) Solids. A flame or audible report occurring on at least 50% of the trials at a specific drop height is a positive (+) result (i.e., substance is impact sensitive). Any sample which is impact sensitive at a drop height of 4 in (10.16 cm) or less is too sensitive for transport.

(b) Liquids. Any liquid explosive which produces a flame, smoke or audible report (positive (+)) result on any of the ten trials at 10 in (25.40 cm) drop height is too sensitive for transport.

c. ABL Friction test (DoD test).

(1) *Introduction*. This test measures the sensitivity of the substance to friction.

(2) *Apparatus and materials*. Figure 5-9 illustrates the apparatus. The test substance is subjected to vertical compression force under a non-rotating wheel, while the substance is moved in a horizontal direction on a sliding anvil.

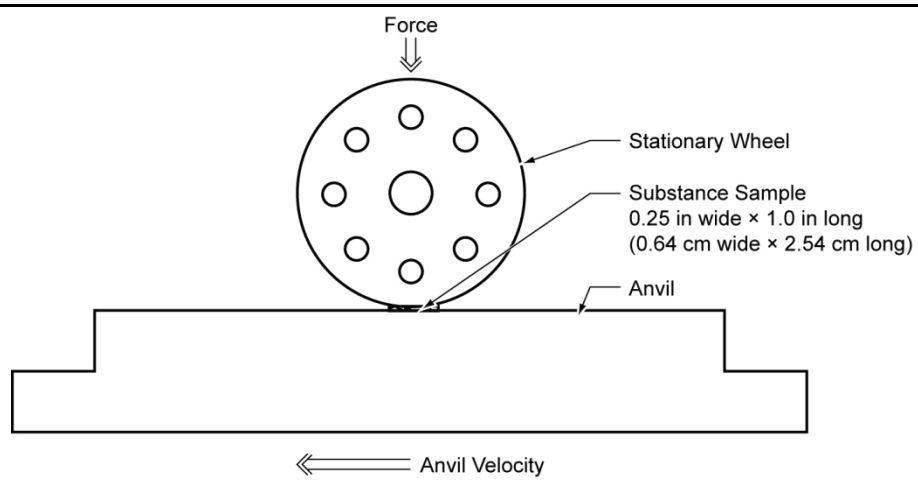

Figure 5-9 ABL Friction Sensitivity Test (DoD Test)

(*a*) The wheel and anvil are constructed of steel with a finish of 0.00006 in (1.52 μ).

(b) Force is applied hydraulically through the non-rotating wheel to the sample that rests on the anvil. The compressive force is measured by a gage. The maximum force to be used is 1,800 lb_f (8000 N) and the minimum is 10 lb_f (44 N).

(c) A pendulum impacting on the edge of the anvil propels the anvil at a known velocity, perpendicular to the compressive force that is applied to the sample. Normally, the anvil slides 1 in (2.54 cm). The initial velocity is determined by calibration.

(3) Procedure.

(a) Place a thin uniform layer of the substance on the anvil under the wheel on the sliding anvil. (NOTE: The substance thickness on the anvil should be equivalent to one particle thickness for solids based on largest particle size in the distribution.)

(b) Lower the wheel onto the substance and apply an initial 1000 lb_f (4450N) force to the wheel.

(c) Accelerate the anvil to 3 ft/sec (1 m/sec) and record the response of the substance using the criterion of paragraph 5-3*c*(4). Alternate accelerations are acceptable.

(d) Increase or decrease the force by 75% on the subsequent trial based on a negative (–) or positive (+) result as defined in paragraph 5-3*c*(4). This procedure should be followed to determine the highest compressive force at which no positive (+) results are obtained in 20 consecutive trials. This value is the Threshold Ignition Level (TIL) of the substance.

(e) The anvil should be cleaned after each trial and a new substance applied to the anvil.

(f) Use an iterative procedure to determine the highest compressive force at which no positive (+) results is obtained in 20 trials. (NOTE: PETN should be tested as a reference explosive for evaluating the test results. Report the PETN results along with the sample results.)

(4) Criteria and method of assessing results.

(a) A positive (+) result is any one of the following:

1. Visible sparks.

2. Visible flame.

3. Audible explosion.

4. Loud crackling noise.

5. Detection of reaction products by a gas analyzer.

(b) Any other result is negative (–). (NOTE: Discoloration of the sample holder, subdued cracking due to crumbling of the sample, or slight odor are not positive (+) results.)

(c) A substance with TIL equal to or greater than dry PETN (i.e., lower compressive force), is a positive (+) result and is too sensitive for transport. PETN must have been tested within three months of the substance test. Report the PETN results along with the sample test results. (NOTE: PETN typically has a TIL of 41.4 lb_f (184 N) at 3 ft/sec (0.9 m/sec).)

d. UN Test 3(b)(i)—Bundesanstalt fur Materialprufung (BAM) Friction.

(1) *Introduction*. This test measures the sensitivity of the substance to friction.

(2) *Apparatus and materials.* The friction apparatus, shown in Figure 5-10, consists of a friction device mounted on a cast steel base. The friction device is a fixed porcelain peg and a moving porcelain plate. The porcelain plate is held in a carriage that runs in two guides. The carriage is connected to an electric motor via a connecting rod, an eccentric cam and gearing such that the porcelain plate is moved 0.4 in (10 mm) backward and forward beneath the porcelain. The porcelain peg can be changed and is connected to a loading arm that is fitted with 6 notches at 4.3 in (11 cm), 6.3 in (16 cm), 8.3 in (21 cm), 10. 2 in (26 cm), 12.2 in (31 cm) and 14.2 in (36 cm) from the axis of the porcelain peg. When the loading device is lowered onto the porcelain plate, the longitudinal axis of the porcelain peg is perpendicular to the plate. Various size weights (up to 22 lb (10 kg)) can be attached to the loading arm at the notches by means of a ring and hook. The use of different weights in different notches results in loads on the peg of 1.1 – 80.1 lb_f (5 – 360 N). (NOTE: If necessary, intermediate loads may be used.)

(3) Procedure.

(a) Substance preparation. Substances should be tested as received. Wetted substances should be tested with the minimum content of wetting agent provided for transport.

1. Powdered substances should be sieved through a 0.02 in (0.5 mm) mesh prior to testing.

2. Substances that have been compressed, cast or otherwise consolidated should be broken into small pieces and sieved through a 0.02 in (0.5 mm) mesh.

3. Substances that are transported as charges should be tested in the form of discs or chips totalling 0.06 in^3 (10 mm^3) (minimum diameter: 0.16 in (4 mm)).

(b) Attach the porcelain plate to the carriage so that the sponge-mark grooves run transversely to the direction of movement. (NOTE: Each part of the surface of the plate and peg is used once. Both ends of the peg may be used (i.e., two trials) and the two plate surfaces may be used for three trials.)

(c) Place approximately 0.06 in^3 (10 mm^3) of the substance in the sample container. (NOTE: 0.06 in^3 (10 mm^3) of powdered substances can be obtained with a cylindrical measure 0.1 in (2.5 mm) diameter × 0.1 in (2.5 mm) deep. 0.06 in^3 (10 mm^3) of paste-like or gel-type substances can be gathered with a rectangular 0.02 in (0.5 mm) thick gauge with a 2 in (51 mm) × 0.4 in (10 mm) window filled with the substance.)

(d) Clamp the porcelain peg onto the sample.

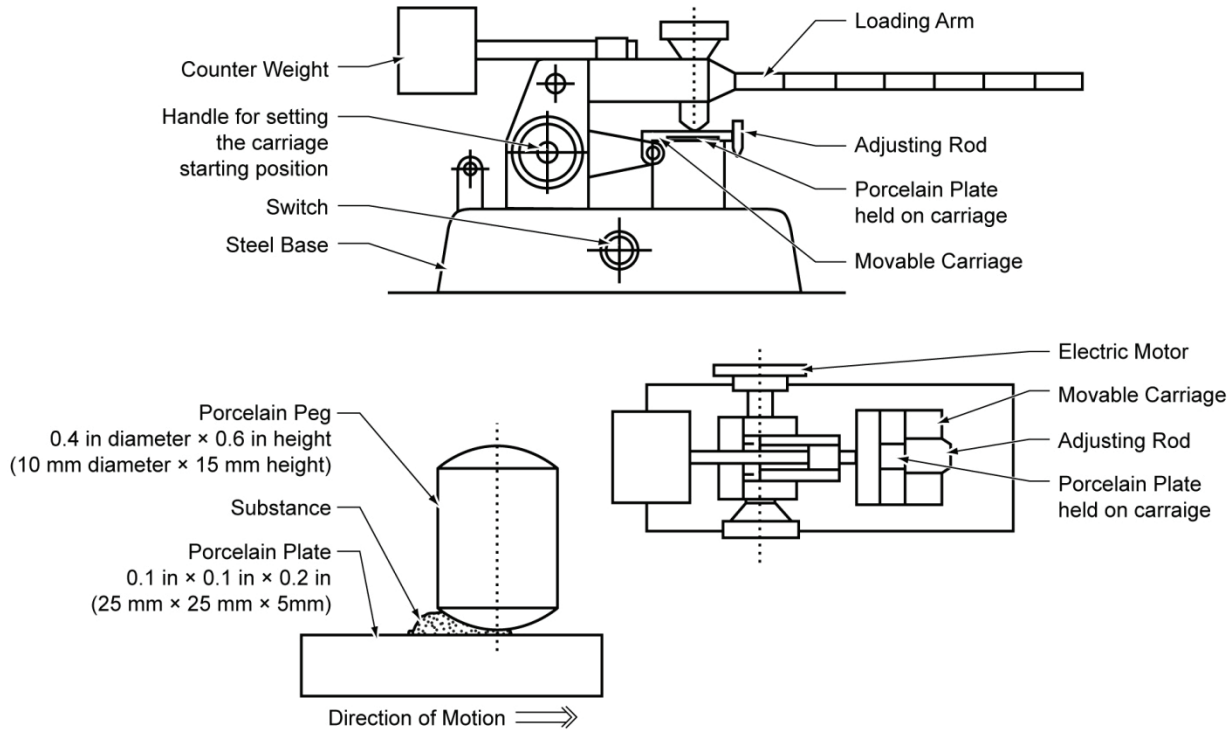

Figure 5-10 BAM Friction Apparatus (UN Test 3(b)(i))

(e) Place the required weight on the loading arm and operate the switch. (NOTE: Ensure that the peg rests on the sample and that there is sufficient substance to pass under the peg when the porcelain plate moves in front of the peg.)

(f) Conduct the first trial at a load of 80.1 lb_f (360 N). Categorize the results of each trial using the terms: no reaction, decomposition (change of color or odor), or explosion (audible report, crackling, sparking, or flame).

1. If an explosion occurs at 80.1 lb_f (360N), conduct subsequent trials at stepwise lower loads until the result decomposition or no reaction is observed. Repeat this friction load level six times if no explosion occurs; otherwise, reduce the friction load in steps until the lowest load is determined at which no explosion occurs in six trials.

2. If in the first trial at 80.1 lb_f (360 N) the result decomposition or no reaction occurs, up to five additional trials are performed. If decomposition or no reaction occurs in all six trials at the highest load, cease testing. If an explosion is obtained, the load is reduced as above.

(4) Test criteria and method of assessing results.

The result is positive (+) if the lowest friction load at which one explosion occurs in six trials is less than 18 lb_f (80 N). The substance is too dangerous for transport in the form in which it was tested. Otherwise, the result is negative (–).

e. UN Test 3(c)—Thermal Stability test.

(1) *Introduction*. This test measures the stability of a substance when subjected to elevated thermal conditions. An un-instrumented test is conducted first. If any instability is observed, a second instrumented test is conducted.

(2) Apparatus and materials.

(a) First Part—Un-instrumented Thermal Stability. Any vented oven that is equipped with controls to preclude thermal runaway, if the primary control fails, may be used to subject a substance to 167 ± 4°F (75 ± 2°C) for 48 hours.

(b) *Second Part—Instrumented Instability*. The apparatus shown in Figure 5-11 may be required based upon the results of the Un-instrumented test. (NOTE: An inert material with physical and thermal properties similar to those of the test substance must be used for the reference material.)

(3) Procedure.

(a) First Part—Un-instrumented Thermal Stability (for substances containing liquid nitrate esters, conduct the Instrumented Instability test below).

1. Place 770 gr (50 g) of the substance in a beaker.

2. Cover the beaker.

3. Place the covered beaker in the oven and heat at 167 ± 4°F (75 ± 2°C) for 48 hours. If ignition or explosion does not occur, but there is evidence (e.g., fuming or decomposition) that some self heating has occurred, the second part of this test (see para 5-3*e*(3)*(b)*) is required. (NOTE: Smaller samples of new substances should be subjected to several screening tests to understand the behavior of the substance.)

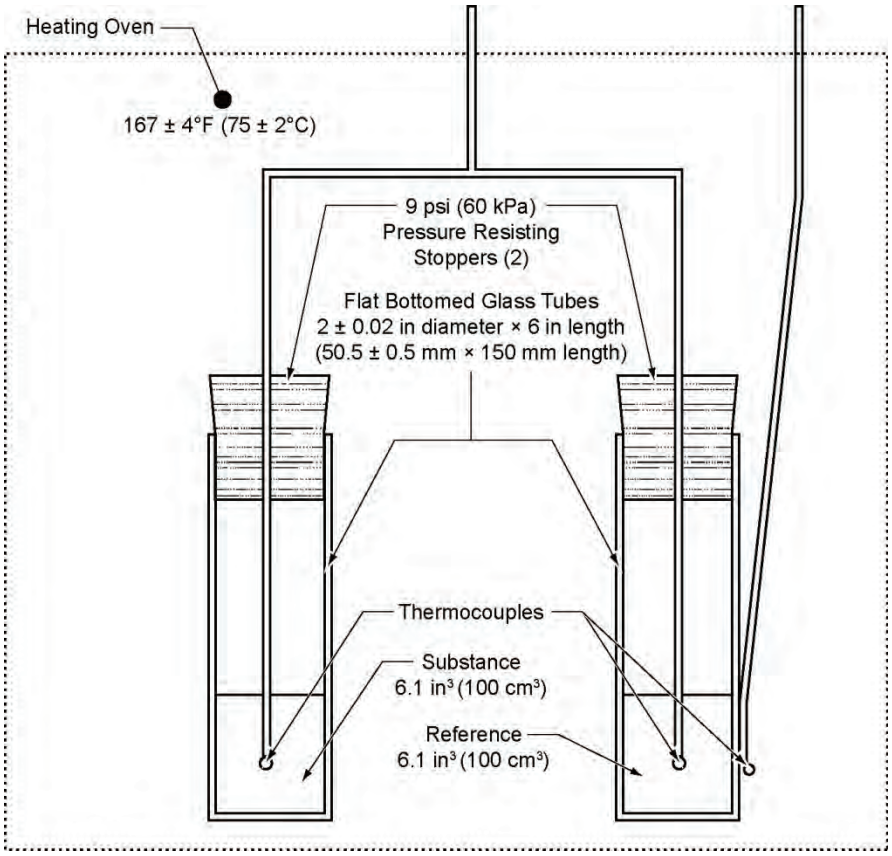

Figure 5-11 Instrumented Instability Apparatus for Second Part of Thermal Stability Test (UN Test 3(c))

(b) Second Part—Instrumented Instability.

1. Place 1540 gr (100 g) (or 6.1 in^3 (100 cm^3) if the density is less than 62.4 lb/ft^3 (1000 kg/m^3)) of the substance in one tube and the same quantity of reference substance in the other tube.

2. Insert thermocouples into each tube at half-height of the substances. (NOTE: If the thermocouples are not inert with respect to both the substance being tested and the reference substance, they must be enclosed in sheaths that are inert.)

3. Place the control thermocouple and the covered tubes in an oven and heat at 167 ± 4°F (75 ± 2°C).

4. Measure the temperature difference (if any) between test sample and reference after they reach 167 ± 4°F (75 ± 2°C) for 48 hours. The thermocouple sampling rate shall be at least once per minute.

5. Record any visual evidence of decomposition of the substance.

(4) Criteria and method of assessing results.

(a) First Part—Un-instrumented Thermal Stability. The result is positive (+) if ignition or explosion occurs. Negative (–) if no changes are observed.

(b) Second Part—Instrumented Instability.

1. The sample is thermally unstable (positive (+)) if an ignition, explosion, or a temperature difference (i.e., self-heating) of 5°F (3°C) or greater of the sample is recorded.

2. If a positive (+) result is not observed, but self-heating of less than 5°F (3°C) is noted, additional tests or evaluation may be required to determine thermal stability.

3. A positive (+) result indicates a substance is too thermally unstable for transport.

f. UN Test 3(d)—Small-scale burning test.

(1) *Introduction*. The test determines the response of an unconfined substance to fire.

(2) *Apparatus and materials*. Figure 5-12 shows the kerosene-soaked sawdust bed that provides the fire and the plastic beaker used to hold the substance. The sawdust bed should be ignited remotely. For substances that do not readily ignite, double the amount of sawdust and kerosene for a bed thickness of 1 in (2.5 cm).

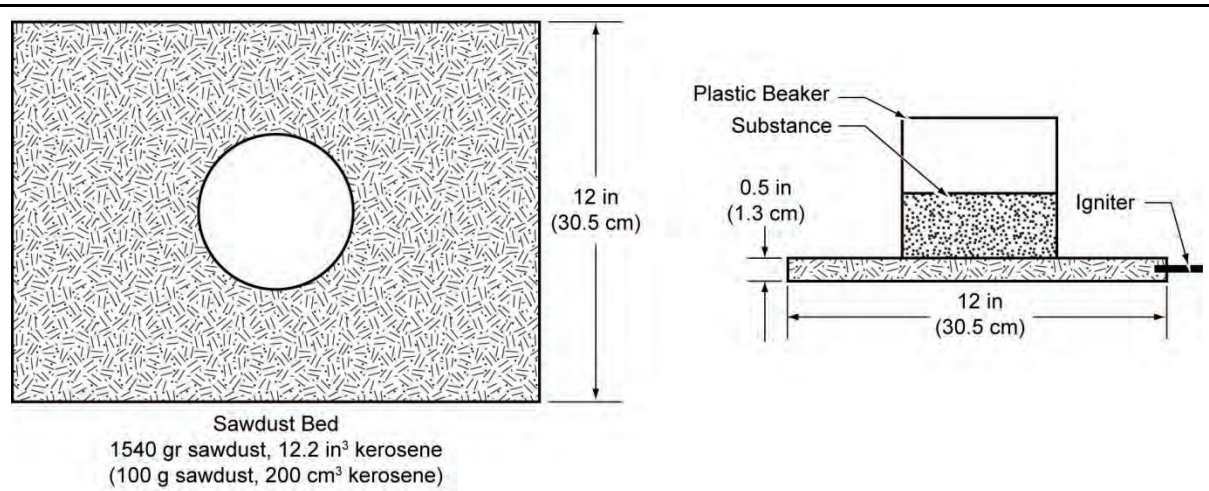

Figure 5-12 Small-scale Burning Test Configuration (UN Test 3(d))

(3) Procedure.

(a) Place the substance (liquid or solid) in a plastic beaker. (NOTE: Ensure that substance is compatible with the beaker.)

(b) Place a beaker large enough to contain the substance on the bed of kerosene-soaked sawdust and ignite the sawdust remotely.

(c) Conduct two trials with 154 gr (10 g) of substance and two trials with 1540 gr (100 g) of substance. (NOTE: The 1540 gr (100 g) trials may be omitted if a positive (+) response occurs on the 154 gr (10 g) trials.)

(4) Criteria and method of assessing results.

(a) The results are reported as one of the following categories: fails to ignite, ignites and burns, or explodes.

(b) The test result is positive (+) if the substance explodes and the substance is considered to be too dangerous for transport in the form in which it was tested.

(c) Any other result is negative (–).

g. Failures.

(1) Substances that fail UN Test 3(c) Thermal Stability are forbidden for transport.

(2) Substances that fail either an impact test, a friction test, or an ignition without confinement test may be encapsulated or packaged and subjected to UN Test 4(b)(i) Steel Tube Drop Test for Liquids or UN Test 4(b)(ii) 40-ft (12 m) Drop Test for Articles and Solid Substances for possible acceptance into Class 1.

5-4. UN Series 4 Tests (New AE)

a. UN Series 4 tests are listed in Table 5-4.

(1) The tests are conducted to answer the question "Is this AE, packaged AE or packaged substance too hazardous for transport?"

(2) UN Series 4 tests are not mandatory if all explosive substances within the AE pass all four substance test types of Table 5-2, subject to the stipulations below.

Table 5-4
UN Series 4 Tests

UN Test No.	Name of Test	Reference
4(a)	Thermal Stability Test for Articles and Packaged Articles	Paragraph 5-4*b*
4(b)(i)	Steel Tube Drop Test for Liquids	Paragraph 5-4*c*
4(b)(ii)[1]	40-ft (12 m) Drop Test for Articles and Solid Substances	Paragraph 5-4*d*

NOTE: 1. Acceptable test if UN Test Series 3 results not available.

(3) UN Test 4(a) is mandatory for AE or packaged AE that contains a new substance (i.e., has not been used in a previously hazard classified AE) and that has not been subjected to UN Test 3(c) (i.e., Substance thermal stability test).

(4) UN Test 4(a) is mandatory for AE or packaged AE that contains pyrophoric substances (HD 4.2). Pyrophoric substances will fail UN Test 3(c) by the nature of their characteristics.

(5) UN Test 4(b)(i) (for liquids) or UN Test 4(b)(ii) (for solids) is mandatory for AE, packaged AE, or packaged substances when the substances within have not passed, or have not been subjected to, the impact, friction (except liquids), and ignition without confinement type tests of Table 5-3. As an alternative to these drop tests, an existing hazard classification (i.e., DoD final, DOE final, or DOT) of AE which contains the same substance(s) may be used to show the new AE is not too hazardous to transport. This alternative is acceptable provided differences in design and packaging are evaluated to show they would not adversely affect the test results, but may not be acceptable for AE containing primary explosives in-line within the explosive train.

(6) UN Test 4(b)(ii) is mandatory for AE containing hypergolics. As an alternative to this drop test, UN Test 4(b)(ii) data from analogous AE may be acceptable provided differences in design and packaging are evaluated to show they would not adversely affect the test results.

(7) Although the UN Test 4(b)(ii) test may not be required for hazard classification per the stipulations above, the test may still be required to meet the the packaging requirements of 49 CFR 173.60(b)(14) and 49 CFR 173.62 Packaging Method 130 for large and robust AE. Contact the DoD Service packaging personnel or DOE Hazard Classifier, as appropriate, for guidance.

(8) AE are forbidden for transport if a positive (+) result is obtained in any of the UN Series 4 tests.

b. UN Test 4(a)—Thermal stability test for AE.

(1) *Introduction*. This test evaluates the thermal stability of AE and packaged AE (not packaged substances) when subjected to elevated temperature. Several criteria are used to evaluate the results of the test. The smallest packaged unit should be tested.

(2) *Apparatus and materials*. An oven equipped with ventilation, explosion-proof electrical features and a control to maintain the temperature of the AE at 167 ± 4°F (75 ± 2°C) is required. (NOTE: It is desirable that the oven should have protection against excessively high temperatures in the event of a control malfunction.) The temperature of the AE must be recorded to assess any temperature increase that could represent an exothermic reaction of the AE.

(3) Procedure.

(a) Place a thermocouple either on the outside casing of the unpackaged AE or on the outside casing of an AE that is located near the center of the package.

(b) Place the AE, together with the thermocouple, in the oven, heat the AE to 167 ± 4°F (75 ± 2°C) and maintain at that temperature for 48 hours.

(c) Record the temperature of the AE or packaged AE a minimum of once per minute.

(d) After 48 hours, allow the AE to cool to ambient before inspecting for exudation or damage.

(4) Criteria and method of assessing results.

(a) The result is positive (+) if the AE or packaged AE exhibits any of the following:

1. Explosion.

2. Ignition.

3. Substance exudation (i.e., substance is visible outside the AE).

4. A temperature rise exceeding 5°F (3°C).

5. Damage to the outside casing or to the outside packaging.

6. For hypergolic systems, either fuel or oxidizer leaks from its primary storage tank.

(*b*) A positive (+) result indicates that an AE or packaged AE are too hazardous for transport.

c. UN Test 4(b)(i)—Steel tube drop test for liquids.

(1) *Introduction*. This test measures the sensitivity of a liquid substance when it is dropped from various heights in a closed steel tube upon a steel anvil. (NOTE: The test may be appropriate for solid substances that are shipped wetted.)

(2) *Apparatus and materials*. A sealed steel tube, shown in Figure 5-13, is used to contain the liquid substance during the test. The upper end of the tube is closed with a cast iron threaded pipe cap sealed with Teflon™ tape.

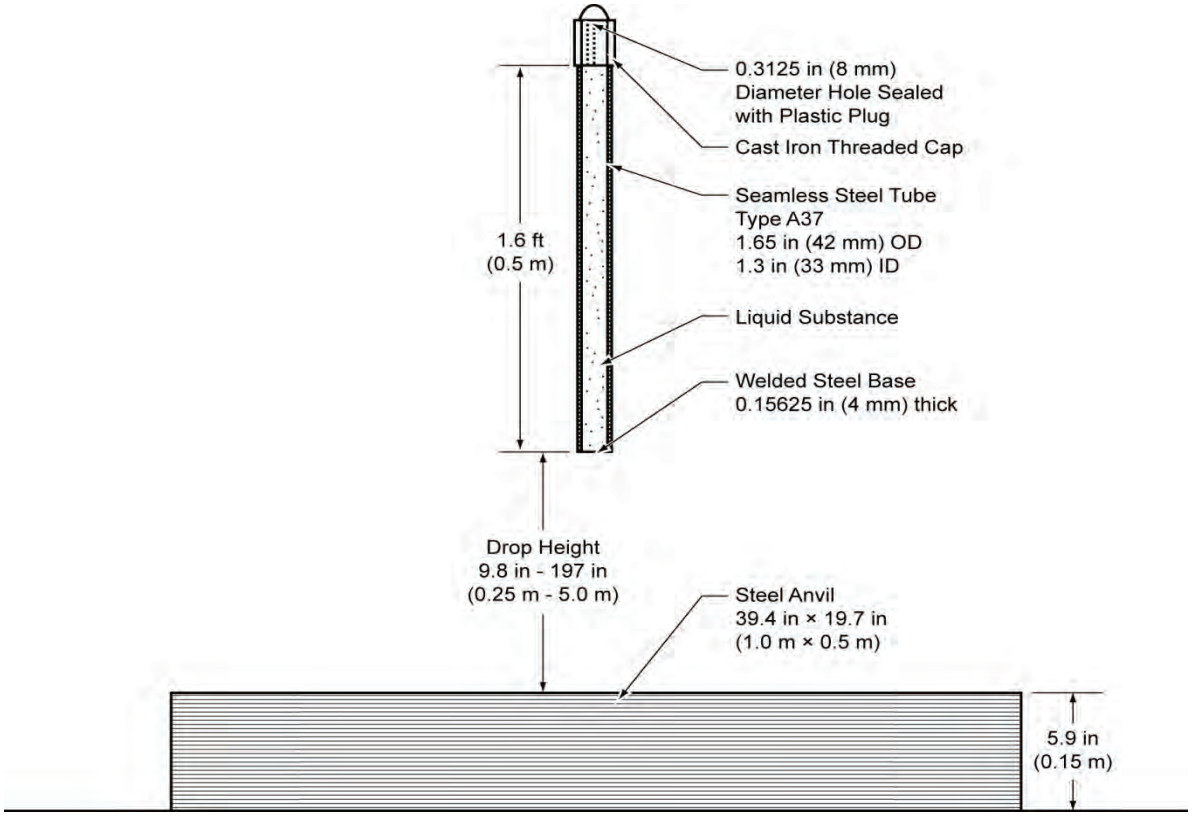

Figure 5-13 Steel Tube Drop Test for Liquid Substances (UN Test 4(b)(i))

(3) Procedure.

(a) Record temperature and density of the liquid.

(b) Agitate the liquid substance for 10 seconds and drop the steel tube within one hour of agitation.

(c) Drop the tube in a vertical orientation with the cap end up onto the steel plate. Increase the drop height in 9.8 in (0.25 m) increments up to 197 in (5 m). Increase the drop height until the liquid substance exhibits a positive (+) result per paragraph 5-4*c*(4) or the maximum height is reached.

(d) Record the results for each trial.

(4) Criteria and method of assessing results.

(a) The result is positive (+) if the substance detonates at any drop height at or below the maximum drop height (197 in (5 m)) and the liquid substance is unsuitable for transportation in any packaging.

(b) Transport of the liquid substance in metal packaging is prohibited if there is any detectable reaction after a drop of 197 in (5 m), unless suitability for transport can be demonstrated to the satisfaction of the Service Hazard Classifiers or DOE Hazard Classifier and the DOT.

(c) No reaction at 197 in (5 m) is a negative (–) result and the liquid substance is suitable for transport in any container.

d. UN Test 4(b)(ii)—40-ft (12 m) drop test for unpackaged articles, packaged articles and packaged substances.

(1) *Introduction*. This test determines whether a packaged substance, unpackaged AE or packaged AE (i.e., test item) can withstand a free-fall impact from 40 ft (12 m) without reacting. The test is conducted in three orientations as described in paragraph 5-4*d*(3) and NATO STANAG 4375 (reference (A.17)). (NOTE: The test should not be used to determine the integrity of the packaging.) The test items may be dropped while conditioned to extreme temperatures to satisfy other than hazard classification requirements, and test items that have been previously subjected to environmental conditioning (e.g. transportation vibration) are allowed provided their integrity remains intact.)

(2) *Apparatus and materials*. Figure 5-14 shows the characteristics of the typical impact zone.

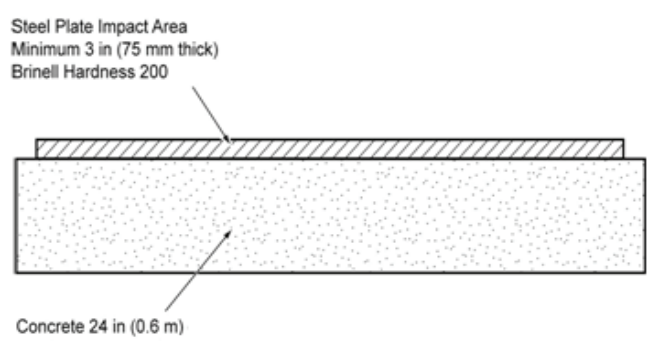

Figure 5-14 40-ft (12 m) Drop Test Impact Surface Configuration (UN Test 4(b)(ii))

(a) The impact surface should be steel, with a hard, visually smooth surface and supported by reinforced concrete of a minimum compressive strength of 4 ksi (28 MPa). The length and width of the impact surface should not be less than 1.5 times the dimension of the test item.

(b) Photographs and visual recording devices must be used to verify impact attitude and results. The test agency may use a guidance device to obtain the desired impact attitude. Such a device should not significantly restrain drop velocity, nor impede rebound after impact.

(c) In certain cases, some of the explosive AE in a package of AE under test may be replaced with inert AE. These inert AE should be of the same mass and volume as the explosive AE they replace. The explosive AE should be located in the position where they are most likely to react on impact.

(d) If a packaged substance is tested, none of the substance may be replaced by inert material.

(e) Non-explosive components of the AE may be replaced with simulated components of the same weight for this test; however, the substituted components must be geometrically and structurally representative.

(3) Procedure.

(a) Three separate drops, at different impact orientations, are required. Unless analysis or previous test history indicates differently, the following impact orientations are commonly used. The test item, either packaged or unpackaged, is released such that it will approximate an initial impact in the following orientations:

1. Major axis vertical, nose down. ↓

2. Major axis vertical, base down. ↑

3. Major axis horizontal.→

(b) Carry out the test in order of decreasing likelihood of producing a positive (+) result. No AE will be dropped more than once.

(c) Drop the AE from a height of 40-ft (12 m) as measured from the lowest point of the AE to the impact surface.

(d) Observe a safe waiting period following impact even if no visible initiation or ignition occurs at impact. Examine the AE to determine if any ignition or initiation occurred.

(e) Record the response of the AE (i.e., test photographs, visual observations, post drop inspection, etc.). (NOTE: Rupture of the package may be noted, but does not affect the conclusion.)

(4) *Criteria and method of assessing results.* AE that produce a positive (+) result are too hazardous for transport.

(a) Positive (+) results are a visible reaction of the energetics with effects apparent outside the article casing (if transported unpackaged) or packaging. (NOTE: Rupture of the package or article casing is not a positive (+) result. For hypergolic systems, fuel and oxidizer cannot leak and mix to cause a fire or an explosion, as a result of the drop test. A leak of either fuel or oxidizer independent of each other is not considered a positive result. Since the test is conducted in limited orientations, if a leak occurs, then additional proof that the design is robust enough to ensure that mixing of the components will not cause a fire or an explosion is required.)

(b) Toxic vapors or other results outside the packaging from hazardous materials that could be harmful are not considered a positive result for Hazard Classification purposes; however, these results may pose environmental and health hazards that should be addressed.

5-5. Harmonized HD 1.1, HD 1.2.1, HD 1.2.2, HD 1.3, and HD 1.4 Assignment Tests (UN Series 6)

a. AE are assigned to HD 1.1, HD 1.2.1, HD 1.2.2, HD 1.3, or HD 1.4 based on their response to the tests in Table 5-5 following success in UN Series 3 (see para 5-3) or UN Series 4 tests (see para 5-4).

The testing in Table 5-5 may not be necessary or may be curtailed if the AE is assessed to be HD 1.1 and the hazardous projection assessment (see para 6-3) is addressed. Elimination or curtailment of testing is evaluated on a case by case basis and is subject to Service Hazard Classifier and Chairman, DDESB approval. For DOE, elimination or curtailment of testing shall be approved by the DOE Hazard Classifier. If AE is designed to produce no external effects (i.e., projections, fire, smoke, heat or loud noise) when functioned, proceed to paragraph 5-9 to determine if it can be excluded from Class 1.

b. A DDESB-approved hazard classification test plan is mandatory for liquid propellants and explosives and AE containing such energetics.

Table 5-5
HD 1.1, HD 1.2, HD 1.3, and HD 1.4 Assignment Tests

Test	Reference
Single Package[1]	Paragraph 5-5*c*
UN Test 6(a)[2]	Reference (A.6)
Sympathetic Reaction[1]	Paragraph 5-5*d*
UN Test 6(b)[2,3]	Reference (A.6)
Liquid Fuel/External Fire[1]	Paragraph 5-5*e*
UN Test 6(c)[4]	Reference (A.6)
UN Test 6(d)	Paragraph 5-5f (Reference (A.6))

NOTE: 1. Harmonized test for hazard classification and IM purposes.
2. Acceptable test for hazard classification purposes only provided means of initiation in paragraph 5-5*c*(2) is used.
3. Acceptable test for hazard classification purposes only provided one trial conducted unconfined for projection hazard assessment.
4. Acceptable test for hazard classification purposes only.

c. Single Package test.

(1) *Introduction*. This test demonstrates whether hazardous effects are apparent outside the package when a single AE within the package is detonated or ignited.

(NOTE: The Single Package test is not appropriate for AE expected to produce effects outside the package. In this case, proceed directly to the SR test, paragraph 5-5*d*.)

(NOTE: For assignment of HD 1.4 CG S with UN 0323, 0366, 0441, 0445, 0455, 0456, 0460 and 0500, see reference (A.5), three unconfined single package tests [UN Test 6(d)] are required. These UN designations shall only be used if the results of Test series 6 (d) have demonstrated that any hazardous effects arising from functioning are confined within the package.

(2) Apparatus and materials.

(a) Confinement. The preferred method of confinement is to position inert packages of similar size, shape and density on five faces of the test package.

(b) Packaged substance initiation.

1. A packaged substance intended to function by detonation should be initiated with the standard detonator (see Figure 5-4). (NOTE: Some substances may require a higher strength detonator than that shown in Figure 5-4. In this case, a detonator of sufficient strength to initiate the substance should be used.)

2. A packaged substance intended to function by deflagration must be first tested confined with the standard detonator (see Figure 5-4). If it does not detonate (see App B), then the subsequent trial must be conducted unconfined with an igniter sufficient to ensure ignition of the substance within the package. (NOTE: The more energetic of either 460 gr (30g) of black powder or the same type and weight of igniter material designed to ignite the substance should be used.)

(c) Packaged AE initiation other than substances. If AE contains components intended to separately function by detonation and by deflagration, testing involving donors of each variety may be necessary to assess which component poses the predominant hazard.

1. The AE location within the package that produces both the maximum probability of propagation to other AE (i.e., acceptors) in the package and the worse case effects external to the package must be occupied by the donor. (NOTE: In the case of AE containing a very small quantity of CG A substance(s) (e.g., detonators), a sufficient number of AE or equivalent AE containing not less than 3 gr (0.2 g) of CG A substance must be initiated simultaneously as the donor.)

2. For rocket motors, propelling charges, or similar items where the propellant poses the predominant hazard, the donor means of initiation must be approved by the Service Hazard Classifiers and Chairman, DDESB. Their approval should consider both the items own means of initiation and other initiation sources (e.g., detonators or shaped charges) capable of stimulating the donor in excess of its own means. An initiation source that may overwhelmingly mask the reaction effects of the items should not be used. If a shaped charge jet initiation source is used:

a. Configure the test to minimize the dispersion of initiation source projections and discount any initiation source remnants recovered during debris collection and projection analysis for the unconfined test.

b. Conduct the confined test such that appropriate shaped charge jet standoff from the donor is maintained and unobstructed by confinement materials.

3. For AE other than those identified in 5-5c(2)(c)2 , the donor must be initiated with its own means of initiation, if present. If not present, the donor AE must be initiated in its designed mode or replaced by AE that has similar output.

(3) Procedure.

(a) The test is applied to a single package of articles in the condition and form in which they are offered for transport /storage. Two trials are conducted (one unconfined, one confined).

(b) For the confined trial, place the confining containers around the package. A minimum thickness of confinement packages of 1.5 ft (0.5 m) for a package not exceeding 5.3 ft^3 (0.15 m^3) or 3 ft (1 m) for a package greater than 5.3 ft^3 (0.15 m^3) must be used. (NOTE: Alternative methods of confinement are to use boxes or bags filled with earth or sand placed around and on top of the package, or to use loose sand around the package. The minimum thickness requirements apply.)

(c) Initiate the detonator or igniter in the donor or other initiation source.

(4) Criteria and method of assessing results.

(a) If reaction effects are contained within the packaging, then the SR test is not required. In this case, proceed to the Liquid Fuel/External Fire (LF/EF) test (see para 5-5*e*).

(b) If reaction effects could cause propagation of adjacent packages, proceed to the SR test (see para 5-5*d*).

d. Sympathetic Reaction (SR) test (NATO STANAG 4396, reference (A.20)).

(1) Introduction. This test demonstrates whether initiation of a single AE (i.e., donor) in a stack of AE will propagate to adjacent AE (i.e., acceptors) of the same type. Conduct two trials, one confined and one unconfined. The unconfined trial is conducted to collect air-blast and projection data for evaluation in accordance with the procedures described in Chapter 6 (see para 6-2 and 6-3, respectively).

(2) Apparatus and materials.

(a) A stack of AE with a minimum volume of 5.3 ft^3 (0.15 m^3) or at least two acceptor packages, whichever is greater in volume, must be tested. Two acceptor packages may not be sufficient to assign HD 1.2. Note that palletized unpackaged articles (e.g., bombs) are each considered to be individual acceptors.

(b) The donor AE is initiated with a detonator, an igniter, or an external source as outlined in paragraph 5-5*c*(2)*(b)* or 5-5*c*(2)*(c)*.

(c) A steel or aluminum witness plate of appropriate thickness and size (i.e., larger in area than the stack) should be positioned beneath the stack. For example, a 0.5 in steel witness plate is appropriate for a 155 mm HE round.

(d) Air-blast measuring (see para 6-2) and video recording equipment are required for the unconfined trial.

(3) Procedure. If AE contains components intended to separately function by detonation and by deflagration, testing involving donors of each variety may be necessary to assess which component poses the predominant hazard.

(a) Position the stack on the steel witness plate. The AE location within the package that produces both the maximum probability of propagation to other AE (i.e., acceptors) in the package and the worse

case effects external to the package must be occupied by the donor. For AE with directional effects (e.g., shaped charge or explosively formed penetrators), surround the donor with a minimum of two acceptor packages, and locate a minimum of two acceptors in the expected path of the directional effects oriented to produce the maximum probability of propagation. For AE consisting of submunitions, one of the submunitions within the donor AE is initiated.

(NOTE: Packaging configurations used to reduce effects must be engineered into the packaging design. Procedural controls are not acceptable.)

(b) For the confined trial, containers similar in shape, size and density to the packaged AE should be placed as closely as possible around the donor and acceptor AE. The confinement containers should provide a minimum 3 ft (1m) confinement thickness in every direction. (NOTE: Alternative methods of confinement such as boxes or bags filled with earth or sand, loose sand placed around and on top of the stack, or a hole recessed into the ground may be used. If loose sand is used for confinement, the stack should be covered or protected to ensure that no sand falls between adjacent packages or non-packaged AE.) AE without packaging should be confined in a manner analogous to that used for packaged AE.

(c) Initiate the donor AE in accordance with paragraph 5-5*c*(2)*(b)* or 5-5*c*(2)*(c)* using the procedure in paragraph 5-5*c*(3)*(c)*.

(d) Determine the number of acceptors that simultaneously detonate. This number plus one (for the donor) may be used for HD 1.2.1 and HD 1.2.3 in determining the Maximum Credible Event (MCE). Also determine where those acceptors that simultaneously detonated were located within the test configuration (e.g., within the donor package). This acceptor location data may be used in HD 1.2.3 determinations.

(e) Collect projections for the unconfined trial using procedures described in paragraph 6-3.

(f) Record the wind velocity and direction for the unconfined trial.

(4) Criteria and method of assessing results.

(a) The AE is assigned to HD 1.1 if more than 50% of the acceptors simultaneously detonate (i.e., detonation (Type I) or partial detonation (Type II) reaction, App B) as indicated by the witness plate, projection collection or air-blast measurements. For HD 1.2 AE candidates, more than two acceptor packages may be required and the specific test plan needs to be coordinated via the Service Hazard Classifiers. No further testing is required provided that hazardous projections have been assessed (see para 6-3).

(b) If the hazardous projection assessment (see para 6-3) for the unconfined SR test exceeds the default value of 1250 ft (381 m), a parenthetical addition to the HD 1.1 will be assigned.

(c) The AE is a candidate for other than HD 1.1 if 50% or fewer of the acceptors simultaneously detonate. Proceed to the Liquid Fuel/External Fire test (see para 5-5*e*) in this instance.

e. Liquid Fuel/External Fire test (NATO STANAG 4240, reference (A.21)).

(1) *Introduction.* This test demonstrates the reaction of AE when exposed to a liquid fuel fire. Air-blast, thermal effects, and projection hazards must also be evaluated (see Chapter 6).

(2) *Apparatus and materials*. Figure 5-15 provides a schematic of a typical test configuration. The following are required:

(a) A stack of AE in their transportation and storage configuration (e.g., pallet or unit load) with a total volume of at least 5.3ft^3 (0.15 m^3) or a minimum of three packages, whichever is the greater. Steel straps should be used to retain the stack configuration during the fire.

(b) A fuel basin filled with liquid fuel (i.e., JP-4, JP-5, Jet A-1 (JP-8), and AVCAT (NATO F-34 or F-44)), or commercial kerosene (Class C2 /NATO F-58) at least 3 ft (1 m) larger than the stack in every direction. The depth of the fuel basin (i.e., height of the wall or embankment) must be sufficient to contain the fuel and must not block the flight of projections.

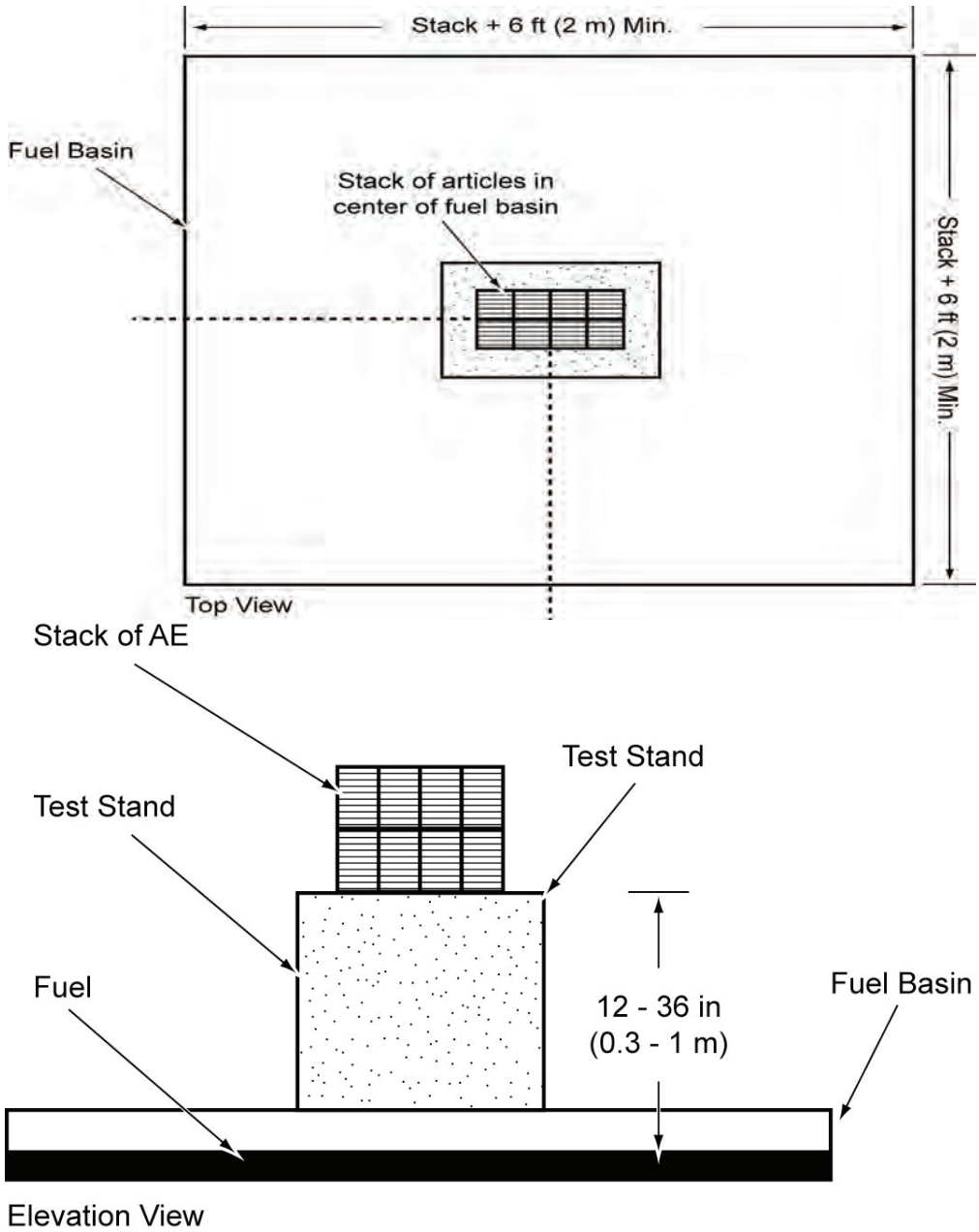

Figure 5-15 Typical Liquid Fuel/External Fire Test Configuration

(c) A quantity of fuel sufficient to maintain a fully developed fire for 150% of the estimated time required to cause all AE to react. (NOTE: Generally, the rate of fuel surface regression due to combustion is approximately 0.25 in/min (7 mm/min).)

(d) A metal grid to support the AE approximately 1– 3 ft (0.3 – 1 m) above the fuel surface at the onset of the test.

(e) Devices to ignite the fire on at least two sides. (NOTE: Electrically initiated thermite grenades, propellant bags with electric igniters or electrically initiated black powder have been successfully used to ignite fuel fires.)

(f) Video or motion picture cameras with sound and visible distance marking devices.

(*g)* Air-blast gauges.

(h) Radiometers or equivalent (e.g., IR cameras), thermocouples and recording equipment (NOTE: radiometers are appropriate for differentiation between HD 1.3 and HD 1.4).

(3) Procedure.

(a) Position the stack of AE on the test stand at the center of the fuel basin.

(b) Precautions against side winds must be observed to avoid dissipation of the heat. The test should not be performed under conditions when the wind speed exceeds 6 mph (10 kph).

(c) Ignite the fuel on two sides simultaneously.

(d) Collect projections using the procedures described in paragraph 6-3.

(e) Identify any AE which was not consumed in the test. *(*NOTE: One trial is required unless a significant quantity of unconsumed AE remains after the test. In this case a second trial should be conducted with either more fuel or a different fuel to increase the intensity or duration of the fire.)

(f) Determine the number of AE that simultaneously detonate. This number may be used for HD 1.2.1 in determining the MCE.

(g) Figure 5-16 provides a suggested data sheet to record the information required to assist with HD assignment.

f. UN Test 6(d)-Unconfined package test

(1) *Introduction.* This test demonstrates whether hazardous effects are apparent ouside the unconfined package when a single AE within the package is detonated or ignited. It is only required for the assignment of HD 1.4 CG S with UN 0323, 0366, 0441, 0445, 0455, 0456, 0460, and 0500.

(2) Apparatus and materials.

(a) Three packages of the AE in the condition and form which they are offered for transportation and storage.

(b) The donor AE is initiated with a detonator, an igniter, or an external source as outlined in paragraph 5-5c(2)(b) or 5-5c(2)(c).

(c) A 0.1 in (3.0 mm) thick mild steel witness plate

(d) A sheet of 0.26 ± 0.01 ounces/ft^2 (80 ± 3 g/m^2) paper

(e) Video recording equipment

(3) *Procedure.* The test is applied to packages of AE in the condition and form in which they are offered for transportation and storage. Where AE are transported and stored without packaging, the tests should be applied to the non-packaged articles. The test is performed three times, in different orientations, unless a decisive result is obseved earlier.

(a) Position one package on the steel witness plate on the ground without confinement.

(b) Place a sheet of paper 9.8 in (25 cm) from the package in the direction most likely to experience a flash or flame from the AE.

(c) Initiate the donor AE in accordance with paragraph 5-5*c*(2)*(b)* or 5-5*c*(2)*(c)* using the procedure in paragraph 5-5*c*(3)*(c)*.

(d) Evaluate witness plate for denting or perforations,

(e) Determine whether paper was ignited,

(f) Record projections (weight and distance) and any disruption of the package.

g. HD 1.1, HD 1.2.1, HD 1.2.2, HD 1.3 and HD 1.4 assignment procedures. The results of the Single Package test or the SR test and the LF/EF test are used to assign a hazard classification other than HD 1.2.3 and HD 1.6.

(1) *HD 1.1*. AE are assigned to HD 1.1 if more than 50% of the acceptors simultaneously detonate (detonation (Type I) or partial detonation (Type II), App B) in the SR test or more than 50% of the AE in the LF/EF test simultaneously detonate as indicated by the AE reaction, witness plate, projection collection and air-blast measurements.

(2) *HD 1.2.1 and HD 1.2.2*. AE are assigned to HD 1.2.1 or HD 1.2.2 if the effects in paragraph 5-5*g*(1) did not occur and projections are recovered (see para 6-3) that had a kinetic energy exceeding 15 ft-

lb (20 J) as assessed by the distance-mass relationship presented in Figure 5-17. The projections should have been produced by an explosion reaction or greater (detonation (Type I), partial detonation (Type II), or explosion reaction (Type III), App B). If a deflagration reaction (Type IV) produces hazardous projections (i.e., 58 ft-lb (79 J), see figure 5-17), then such projections must be taken into consideration when assigning the classification.

(NOTE: Except for NEWQD assignments per paragraph 6-2*e*(11), NEWQD is equal to NEW for non-mass exploding, fragment producing AE where high explosives are not present or present in such small quantities that they do not predominate during SR and LF/EF testing.)

(a) AE are assigned to HD 1.2.2 if they contain 1.6 pounds (0.725 kg) NEWQD or less.

(b) AE are assigned to HD 1.2.1 if they contain more than 1.6 pounds (0.725 kg) NEWQD. A parenthetical addition must be assigned if a hazardous projection assessment (see para 6-3) of projections recovered during testing exceeds the default value of 1250 ft (381 m).

(c) AE containing more than 1.6 pounds (0.725 kg) NEWQD may be assigned to HD 1.2.2 through a comprehensive hazardous projection assessment (see para 6-3) that shows the AE testing exhibited a hazardous fragment distance less than or equal to the inhabited building distance (IBD) for HD 1.2.2 AE as given in Table C9.T11 of DoD-6055.09-M (reference (A3)) for the explosive weight tested.

(3) *HD 1.3*. AE are assigned to HD 1.3 if none of the effects in paragraphs 5-5*g*(1) or 5-5*g*(2) occur and

(a) A fireball or jet of flame that extends at least 13 ft (4 m) beyond the edge of the stack occurs, or

(b) Fiery projections (i.e., firebrands, see App B) from the AE (i.e., including from packaging material, but not from the test apparatus) are evident more than 50 ft (15 m) from the edge of the stack. (NOTE: Assigning a parenthetical firebrand hazard distance is required if the distance at which the firebrand areal density exceeds 1 per 600 ft^2 (55.7 m^2) is beyond 150 ft (50 m) from the edge of the stack.), or

(c) The measured irradiance of the burning AE exceeds that of the fire by more than 0.37 kW/ft^2 (4 kW/m^2) at a distance of 50 ft (15 m) from the edge of the stack. The irradiance should be measured for 5 seconds during the period of maximum output. (NOTE: In practice, the measurement of the thermal flux produced by AE during fire exposure is difficult. Consequently, measurement of the burn time may be more practical. See reference (A.6) for additional guidance.)

(4) *HD 1.4.*

(a) AE are assigned to HD 1.4 other than CG S if none of the effects described in paragraphs 5-5*g*(1), 5-5*g*(*2*), or 5-5*g*(3) occur, and

1. Projections are recovered that had kinetic energy exceeding 6 ft-lb (8 J), but less than 15 ft-lb (20 J), as assessed by the distance-mass relationship presented in Figure 5-17, or

2. A fireball or jet of flame that extends more than 3 ft (1 m) from the flames of the fire occurs, or

3. Fiery projections from the AE are evident more than 15 ft (5 m) from the edge of the stack.

(b) AE are assigned to HD 1.4 CG S (other than UN 0323, 0366, 0441, 0445, 0455, 0456, 0460 and 0500) if none of the effects described in paragraphs 5-5*f*(1), 5-5*f*(2), 5-5*f*(3), or 5-5*f*(4)*(a)* occur, and there are no thermal or blast effects which would significantly hinder fire fighting or other emergency response efforts within 15 ft (5m) of the package.

(c) AE are assigned to HD 1.4 CG S with UN 0323, 0366, 0441, 0445, 0455, 0456, 0460 and 0500, if none of the effects described in paragraphs 5-5*f*(1), 5-5*f*(2), 5-5*f*(3), 5-5*f*(4)*(a), or 5-5f(4)(b)* occur, and the results of Test series 6(d) have demonstrated that any hazardous effects arising from functioning are confined within the package. Evidence of a hazardous effect outside the package includes:

1. Denting or perforation of the witness plate beneath the package, or

2. A flash or flame capable of igniting an adjacent material such as a sheet of 0.26 ± 0.01 $ounces/ft^2$ (80 ± 3 g/m^2) paper at a distance of 9.8 in (25 cm) from the package, or

3. Disruption of the package causing projection of the explosive contents, or

4. A projection which passes completely through the packaging (a projection retained or stuck in the wall of the packaging is not considered hazardous).

(5) *N.R.* If there are no effects (i.e., projections, fire, smoke, heat or loud noise) external to the package, the procedure in paragraph 5-9 may be used to determine if the AE can be excluded from Class 1.

Test Identification				
Test Item	S/N	Date	Energetic Material	Quantity
Test Conditions	*Weather*			
	Temperature	Relative Humidity	Barometric Pressure	Wind Speed
	Fuel Basin	Dimensions	Fuel Type	Fuel Quantity
Flame Temperature Data				
Time to reach 1022°F (550°C)	Fire Duration	Average flame temperature (from time temperatures reaches 1022°F (550°C) until all AE has reacted)		
Test Results				
Observations				
Post Test Remains Tabulation (Correlate to debris map)				

Projection				
Number	Distance (ft or m)	Weight (lb or kg)	Angle	Description

Figure 5-16 Suggested Liquid Fuel/External Fire Test Data Sheet

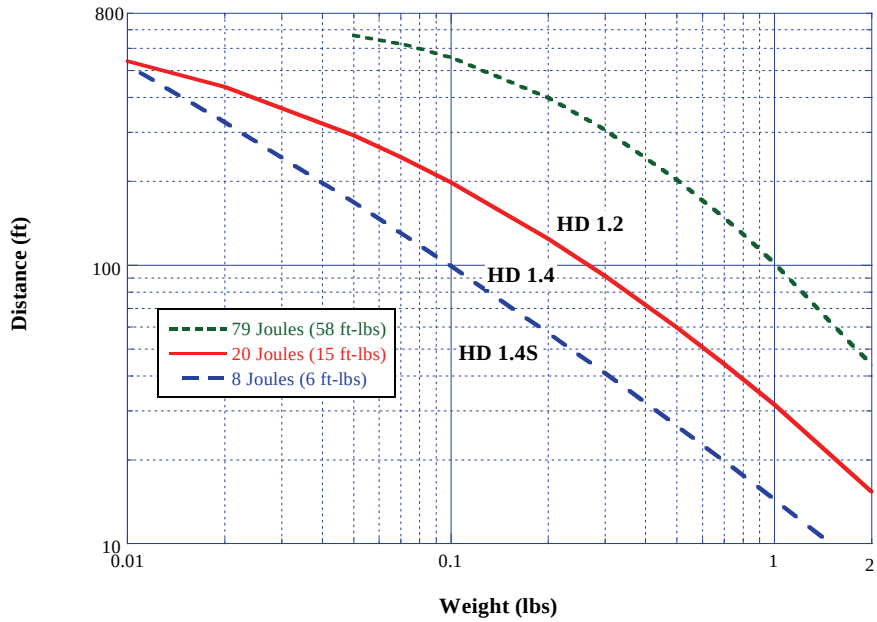

58 ft-lbs (79 J)

D in ft, M in lbs

$D = 101.65*M^{[-1.1061-0.15961*\ln(M)]}$

$M = 4.24*D^{[1.8714-1.2433*(\ln(D))+0.25442*(\ln(D))^2-0.018948*(\ln(D))^3]}$

D in m, M in kg

$D = 11.697*M^{[-1.35846-0.15961*\ln(M)]}$

$M = 4.533*D^{[0.132633-0.49695*(\ln(D))+0.16437*(\ln(D))^2-0.018948*(\ln(D))^3]}$

15 ft-lb (20 J)

D in ft, M in lbs

$D = 31.49*M^{(-0.98-0.0788*\ln(M))}$

$M = 0.000006151*D^{[14.8843-6.0304*((\ln(D))+1.0077*((\ln(D))^2-0.06313*((\ln(D))^3]}$

D in m, M in kg

$D = 4.212*M^{(-1.103-0.0788*\ln(M))}$

$M = 0.1283*D^{[4.399-2.973*((\ln(D))+0.7077*((\ln(D))^2-0.06313*((\ln(D))^3]}$

6 ft-lb (8 J)

D in ft, M in lbs

$D = 14.41*M^{(-0.896-0.0252*\ln(M))}$

$M = 7.2157*D^{[0.6007-0.9509*((\ln(D))+0.2155*((\ln(D))^2-0.01758*((\ln(D))^3]}$

D in m, M in kg

$D = 2.13*M^{(-0.935-0.0252*\ln(M))}$

$M = 2.4193*D^{[-0.8642-0.3317*((\ln(D))+0.1319*((\ln(D))^2-0.01758*((\ln(D))^3]}$

Figure 5-17 Relationship of Projection Kinetic Energy and Hazard Division

5-6. HD 1.2.3 Assignment Tests

a. AE are assigned to HD 1.2.3 based on their response to the tests in Table 5-6 following success in UN Series 3 (see para 5-3) or UN Series 4 tests (see para 5-4). AE assigned to HD 1.2.3 will have a mandatory parenthetical number (see para 6-3) and a mandatory MCE value.

Table 5-6
HD 1.2.3 Assignment Tests

Test	Reference
Sympathetic Reaction	Paragraph 5-5*d*
Liquid Fuel/External Fire	Paragraph 5-5*e*
Slow Heating	Paragraph 5-6*d*
Bullet Impact	Paragraph 5-6*e*

b. *Sympathetic Reaction*. The SR test must be conducted in accordance with paragraph 5-5*d*.

(1) *Criteria for assessing results*. Detonation (Type I) or partial detonation (Type II) (see App B) reactions of any acceptor in a package surrounding the donor package are positive (+). Any other acceptor reaction is negative (–).

(2) AE with a positive (+) result cannot be assigned to HD 1.2.3.

c. *Liquid Fuel/External Fire*. The LF/EF test must be conducted in accordance with paragraph 5-5*e*.

(1) *Criteria for assessing results*. Detonation (Type I), partial detonation (Type II), explosion (Type III) and deflagration (Type IV, see App B) AE reactions are positive (+). Any other reaction is negative (–).

(2) AE with a positive (+) result cannot be assigned to HD 1.2.3.

d. Slow Heating (NATO STANAG 4382, Procedure 1, reference (A.22)).

(1) *Introduction*. This test demonstrates the reaction of AE exposed to a gradually increasing thermal environment. It is conducted twice.

(2) Apparatus and materials.

(a) The AE configuration (packaged or unpackaged) must be approved by the Service Hazard Classifiers and Chairman, DDESB.

(b) An oven that provides a controlled thermal environment between 104°F and at least 689°F (40°C and 365°C) and that can increase the temperature of the oven atmosphere at the rate of 6 ± 1°F/hr (3.3 ± 0.5°C/hr) within the controlled temperature range. The oven should minimize hot spots and ensure (i.e., circulation or other means) a uniform thermal environment to the AE. Secondary reactions (e.g., those caused by exudate and explosive gases contacting the heating devices) invalidate the test and should be avoided by providing a sealed inner container to surround AE transported unpackaged. A means of relief in the oven should be provided for the increased air pressure generated during the test due to heating.

(c) Temperature recording devices (permanent record types) are used to monitor temperature continuously or at least every minute. Thermocouples with an accuracy of 2% over the test temperature range should measure the air temperature within the oven (four positions) and the AE surface temperature (two positions).

(d) Video camera(s) to record the overall AE reactivity is (are) required.

(e) Witness plates (see para 5-5*d*(2)(*c*)) to provide physical evidence of the AE reaction (Optional).

(f) Air-blast overpressure gauges.

(3) Procedure.

(a) Place the AE in the oven and take photographs.

(*b)* Increase the oven temperature at approximately 10°F/min (5°C/min) and condition the AE at 122 ± 2°F (50 ± 1°C) for 8 hours, or until the AE reaches thermal equilibrium at 122 ± 2°F (50 ± 1°C), whichever occurs first.

(c) Linearly increase the oven temperature at 6 ± 1°F (3.3 ± 0.5°C) per hour until the AE reacts or until at least 689°F (365°C).

(d) Record the oven air temperature and surface temperature of the AE at reaction, or record those temperatures prior to concluding the test per the test plan or if no AE reaction has occurred when the upper limit of the oven's capability is reached.

(e) Take photographs after the test.

(*f*) Conduct the test twice unless a positive (+) result occurs on the first trial.

(4) *Criteria and method of assessing results.* A detonation (Type I), partial detonation (Type II), explosion (Type III) or deflagration (Type IV, see App B) reaction occurring at a temperature less than or equal to 689°F (365°C) is positive (+) and the AE is not a candidate for HD 1.2.3.

e. Bullet Impact (BI) (NATO STANAG 4241, reference (A.23)).

(1) *Introduction.* Unpackaged or packaged AE, as approved by the Service Hazard Classifiers and Chairman, DDESB, are subjected to a three-round burst of 0.50 caliber (12.7mm) armor piercing (AP) bullets.

(2) *Apparatus and Materials.* The following are required:

(a) Three AE.

(b) Standard 0.50 caliber (12.7 mm) AP bullets (e.g., M2 0.50 caliber AP) with a projectile mass of 710 gr (46 g).

(*c)* One or more 0.50 caliber (12.7 mm) guns capable of firing three rounds at an impact velocity of 2788 ± 66 ft/sec (850 ± 20 m/sec), with a rate of fire of 600 ± 50 rounds/min.

(d) Device or devices to measure the impact velocity of each bullet.

(e) A restraint device capable of preventing AE dislodgment during BI.

(f) Video or motion picture cameras (both high speed and normal speed).

(g) Air-blast overpressure gages.

(h) Figure 5-18 presents a typical test configuration.

(3) Procedure.

(a) Sufficient distance between the muzzle of the gun(s) and the AE should be provided to allow for the bullets to stabilize in flight (i.e., 65.6 – 98.4 ft (20 – 30 m)).

(b) One trial must be conducted such that the bullets impact the largest explosive component. The second trial must be conducted such that the bullets impact the most shock-sensitive explosive component excluding the fuze booster or igniter. The third trial must be conducted such that the bullets impact the booster or igniter.

(c) The aiming point is a 2 in (5 cm) diameter circle on the target. However, the three bullets should be aimed so as not to pass through the same hole.

(d) Figure 5-19 provides a suggested data sheet to record the information required to assist with HD assignment.

(4) *Criteria and method of assessing results.* A detonation (Type I), partial detonation (Type II), explosion (Type III), or deflagration (Type IV) reaction is positive (+) and the AE is not a candidate for HD 1.2.3.

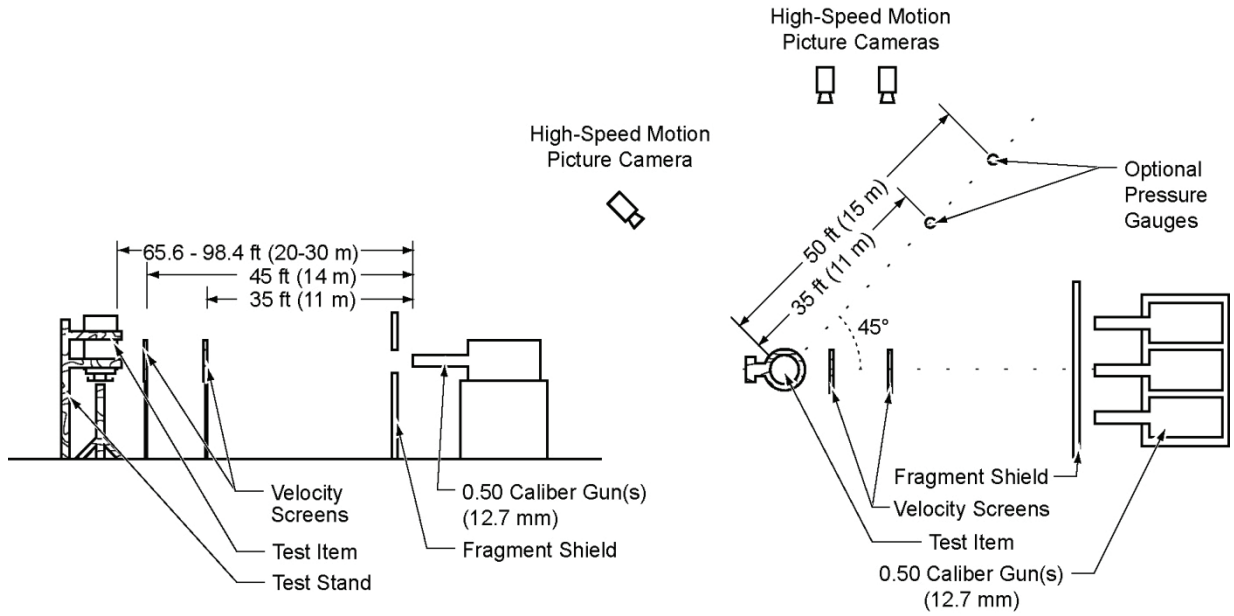

NOTE: All dimensions are nominal and may be increased or decreased based on the NEW of the test item.

Figure 5-18 Typical Bullet Impact Test Configuration

Test Identification				
Test Item	S/N	Date	Energetic Material	Quantity

Test Conditions	*Distances*
Muzzle (Center Gun) to Test Item (± 1 in (2.54 cm))	Muzzle (Center Gun) to Fwd Velocity Screen (± 1 in (2.54 cm))
Fwd Velocity Screen to Aft Velocity Screen: (± 1/16 in (0.16 cm))	Aft Velocity Screen to Test Item: (± 1/16 in (0.16 cm))
Test Item to Pressure Gauge No. 1: (± 1 in (2.54 cm))	Test Item to Pressure Gauge No. 2: (± 1 in (2.54cm))
Gun Sequencing and Bullet Velocities	
Time of 1st Impact on Fwd Velocity Screen: 0.00 ms	Elapsed Time of 2nd Impact on Fwd Velocity Screen* (± 0.02ms)
Elapsed Time of 3rd Impact on Fwd Velocity Screen* (± 0.02ms)	Elapsed Time of 1st Impact on Aft Velocity Screen* (± 0.02ms)
Elapsed Time of 2nd Impact on Aft Velocity Screen* (± 0.02ms)	Elapsed Time of 3rd Impact on Aft Velocity Screen* (± 0.02ms)
*Referenced to 1st impact on forward velocity screen.	
Calculated Velocity for 1st Bullet	Calculated Velocity for 2nd Bullet
Calculated Velocity for 3rd Bullet	Impact Points Relative to Aiming Point on Test Item (if discernable)

Test Results
Observations (e.g., visible reactions, damage to witness panel and dent plate, etc.):

Recovered Test Item Debris				
Piece No.	Approximate Size	Identification (e.g., case, end plate, etc.)	Distance From	Test Site

Measured Peak Overpressure		@ gauge no. 1		@ gauge no. 2

Reaction to Each Impact (from photographic data)	1st Impact	2nd Impact	3rd Impact

Assessed Level of Reaction for Test

Figure 5-19 Suggested Bullet Impact Test Data Sheet

5-7. HD 1.6 Assignment Tests

a. AE are assigned to HD 1.6 based on their response to the tests in Table 5-7 following success in passing UN Series 3 tests (see para 5-3). These tests apply to substances and articles. To determine which substances need to be tested see reference A.6. The specific test plans must be approved by the Service Hazard Classifiers and the Chairman DDESB

Table 5-7
HD 1.6 Assignment Tests

Test	Reference
UN Series 7—Extremely Insensitive Substances (EIS)	Table 5-8
Sympathetic Reaction[1]	Paragraph 5-5*d*
UN Test 7(k)[2,3]	Reference (A.6)
Liquid Fuel/External Fire[1]	Paragraph 5-5*e*
UN Test 7(g)[4]	Reference (A.6)
Slow Heating[1]	Paragraph 5-6*d*
UN Test 7(h)[4]	Reference (A.6)
Bullet Impact[1]	Paragraph 5-6*e*
UN Test 7(j) [4]	Reference (A.6)
Fragment Impact	Reference (A.6) and Reference(A.25)

NOTE: 1. Harmonized test for hazard classification and IM purposes.
2. Acceptable test for hazard classification purposes only provided means of initiation in paragraph 5-5*c*(2) is used.
3. Acceptable test for hazard classification purposes only provided one trial conducted unconfined for projection hazard assessment.
4. Acceptable test for hazard classification purposes only.

b. UN Test 7(a)—EIS Cap test.

(1) *Introduction*. This test determines the sensitivity of a substance to the shock from a standard detonator (see Figure 5-4) or blasting cap

(2) *Apparatus and materials*. A standard detonator (see Figure 5-4) is inserted into a cardboard tube filled with the substance. Evidence of detonation is provided by either a steel witness plate (see Figure 5-20) or lead cylinder (see Figure 5-21) beneath the tube.

(3) Procedure.

(a) Fill the cardboard tube with the substance such that the final density is approximately equal to its shipping density.

(b) Place the tube on the witness and steel base plate or lead cylinder and insert the standard detonator coaxially into the top of the explosive. The detonator should be inserted to a depth equal to its length.

(c) Initiate the detonator and examine the witness plate or lead cylinder.

(d) Three trials are conducted unless a positive (+) result occurs on one of the first or second trial.

(4) *Criteria and method of assessing results*. The result is positive (+) if in at least one trial:

(a) The witness plate (see Figure 5-20) is penetrated. (NOTE: Dents, cracks or deformation in the witness plate are not a positive (+) result.)

Table 5-8
UN Series 7 Tests Extremely Insensitive Substance (EIS)

UN Test No.	Reference
7(a) EIS Cap[1,2,4]	Paragraph 5-7(*b*)
7(b) EIS Gap[1,2,4]	Paragraph 5-7(*c*)
7(c)(i) Susan[2,3,4]	Paragraph 5-7(*d*)
7(c)(ii) Friability[3]	Reference (A.6)
7(d)(i) EIS Bullet Impact[1,2,4]	Paragraph 5-7(*e*)
7(d)(ii) Friability[3]	Reference (A.6)
7(e) EIS External Fire[1,2,4]	Paragraph 5-7(*f*)
7(f) EIS Slow Cook-off[1,2,4]	Paragraph 5-7(*g*)

NOTES: 1. UN recommended test.
2. DoD recommended test.
3. UN optional test.
4. DOE recommended test.

(b) The lead cylinder (see Figure 5-21) is compressed from its initial length by 0.125 in (3.18 mm) or greater.

(*c*) If a positive (+) result occurs, the substance is not an EIS.

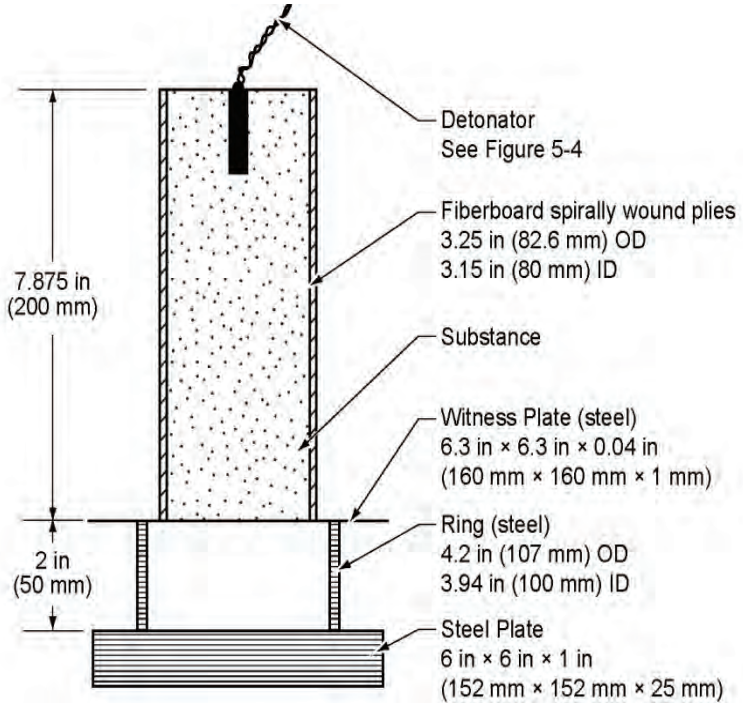

Figure 5-20 EIS Cap Sensitivity Test Configuration (UN Test 7(a)) – Cardboard Tube

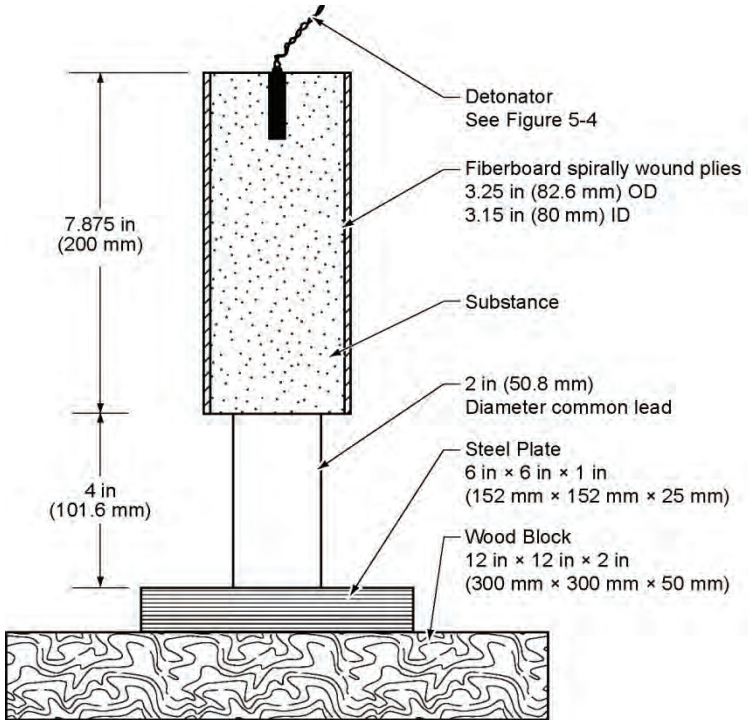

Figure 5-21 EIS Cap Sensitivity Test Configuration (UN Test 7(a)) – Lead Cylinder

c. UN Test 7(b)—EIS Gap test.

(1) *Introduction*. This test is used to measure the sensitivity of an EIS candidate to a calibrated shock.

(2) *Apparatus and materials*. Figure 5-22 provides a schematic of the test configuration.

(a) The substance is loaded flush with the ends of a mild steel cylinder.

(b) A booster charge and PMMA spacer (i.e., gap) are positioned on top of the steel tube.

(c) A steel witness plate is positioned beneath the tube.

(d) An air gap between the cylinder and witness plate is provided by spacers.

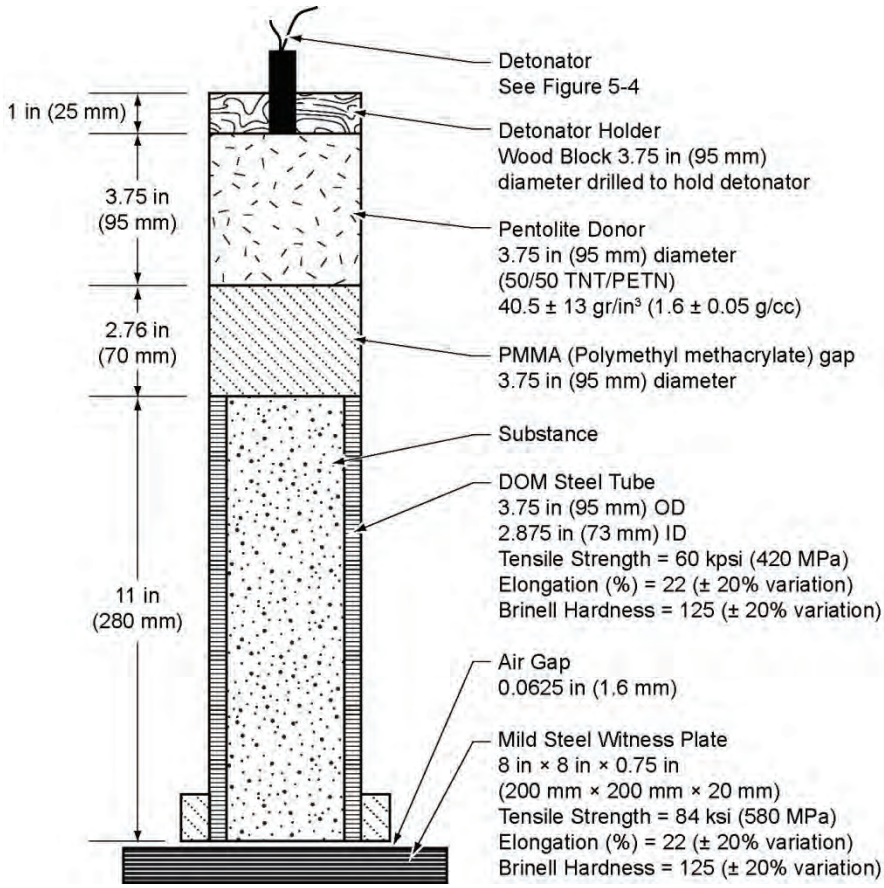

NOTE: An air gap of at least 2 in (5.08 cm) is required between the witness plate and any solid surface to which the witness plate might be abutted.

Figure 5-22 EIS Gap Test Configuration (UN Test 7(b))

(3) Procedure.

(a) Assemble the detonator, booster, PMMA gap, cylinder containing the substance and spacers on the witness plate. (NOTE: The spaces must support only the cylinder and must not contact the substance.)

(b) Insert the standard detonator (see Figure 5-4) into the booster.

(c) Detonate the booster. (NOTE: The witness plate may be propelled some distance by the donor and acceptor reaction. Collection of the witness plate can be accomplished by mounting the assembly over a container of water with at least a 4 in (100 mm) air gap between the surface of the water and the bottom surface of the witness plate. The witness plate should be supported along only two edges. Alternative

collection methods may be used, but it is important to allow sufficient free space below the witness plate so as not to impede plate penetration.)

(d) Conduct three trials on three separate cylinders.

(4) *Criteria and methods of assessing results*. The result is positive (+) if on any one of the three trials the witness plate is penetrated. Any other result is negative (–). (NOTE: Dents, cracks or deformation in the witness plate are not a positive (+) result.) If a positive (+) result occurs, the substance is not an EIS.

d. UN Test 7(c)(i)—SUSAN Impact test.

(1) *Introduction*. The reaction of a substance to high velocity impact while confined is measured.

(2) Apparatus and materials.

(a) The test configuration is shown in Figure 5-23. The substance is contained in the projectile shown in Figure 5-24. At least five projectiles loaded with the substance are required.

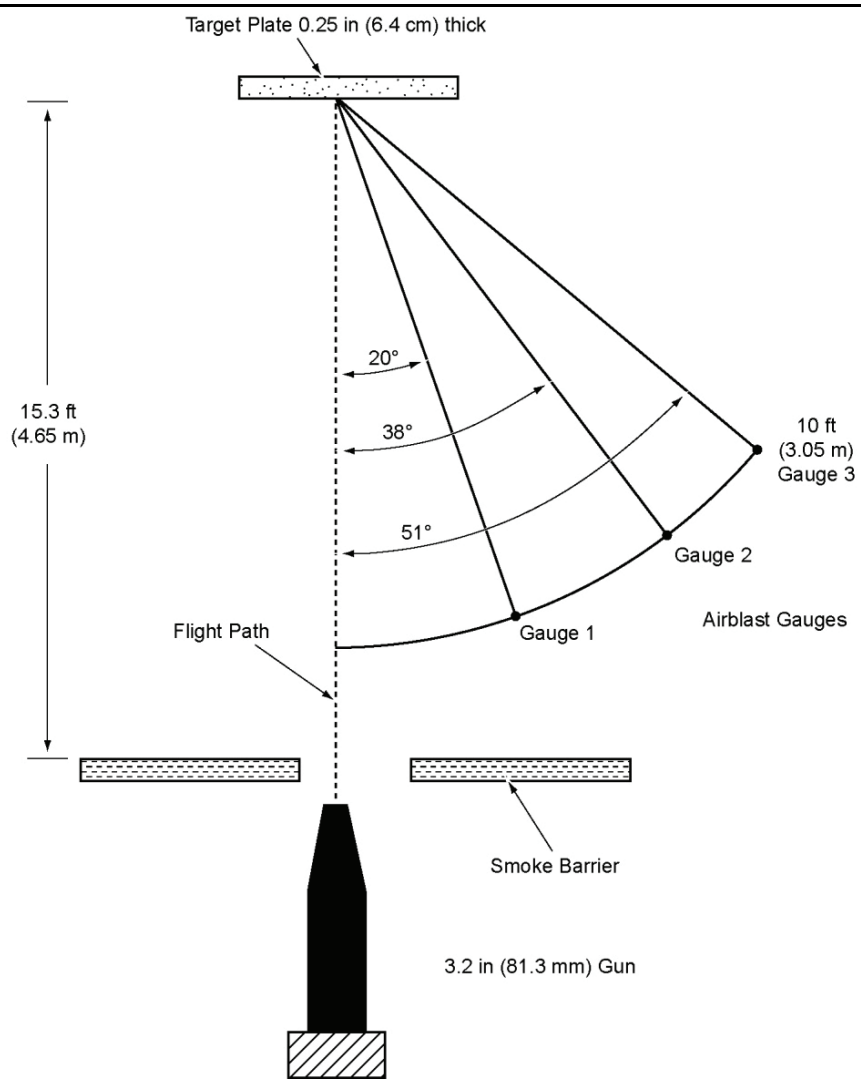

Figure 5-23 SUSAN Impact Test Configuration (UN Test 7(c)(i))

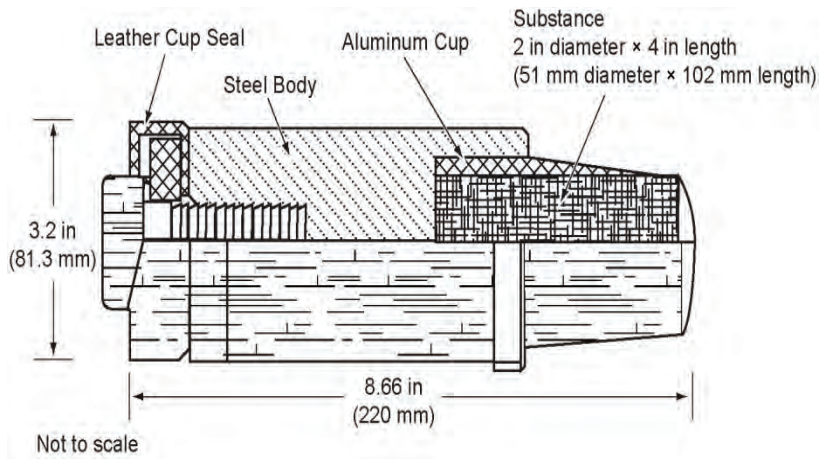

Note: Projectile weight - 12 lb (5.4 kg). Contains approximately 1 lb (0.45 kg) of candidate EIDS.

Figure 5-24 SUSAN Impact Test Projectile (UN Test 7(c)(i))

(b) The projectile is fired from a smoothbore gun at a target plate at approximately 1093 ft/sec (333 m/sec).

(c) Air-blast gauges and recording equipment are required to measure the reaction of the substance upon impact. (NOTE: The air-blast recording system should have a system frequency response of at least 20 KHz.)

(3) Procedure.

(a) Fire projectile at 1093 ft/sec (333 m/sec) (+10%, –0%) until a minimum ten individual air-blast pressure-time records are measured from at least five separate trials.

(b) Compute the average peak air-blast pressure recorded.

(4) Criteria and method of assessing results.

(a) An average air-blast peak pressure greater than or equal to 3.9 psi (27 kPa) is a positive (+) result.

(b) An average air-blast peak pressure less than 3.9 psi (27 kPa) is a negative (–) result.

(5) The substance is not an EIS if a positive (+) result occurs.

e. UN Test 7 (d)(i)—EIS Bullet Impact.

(1) *Introduction.* The test evaluates the response of a substance to the impact and penetration of a 0.5 in (12.7 mm) projectile.

(2) Apparatus and materials.

(a) The substance, loaded into the standard test item shown in Figure 5-25, must be tested in the configuration shown in Figure 5-26. A minimum of six test items must be tested.

(b) A standard 0.5 in (12.7 mm) armor-piercing bullet with a mass of 710 gr (46 g) with a velocity of approximately 2700 ± 120 ft/sec (840 ± 40 m/sec) must be used.

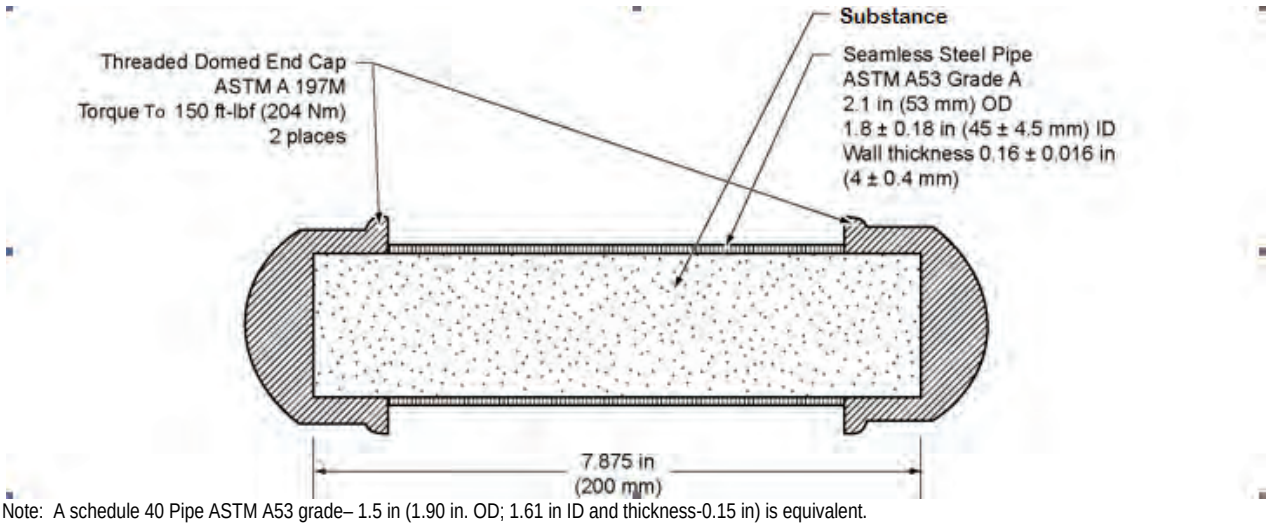

Note: A schedule 40 Pipe ASTM A53 grade– 1.5 in (1.90 in. OD; 1.61 in ID and thickness-0.15 in) is equivalent.

Figure 5-25 Standard Steel Pipe EIS Test Item

(3) Procedure.

(a) Position a single test item on a stand with its longitudinal axis horizontal and perpendicular to the line of flight of the bullet (i.e., impact through the side of the pipe).

(b) Secure the test item to the stand with steel bands.

(c) Fire one projectile into the test item.

(d) Conduct three trials on individual test items (i.e., one bullet into each test item).

(e) Position a single test item on a stand with its longitudinal axis horizontal and parallel to the line of flight of the bullet (i.e., the impact will be through the end cap).

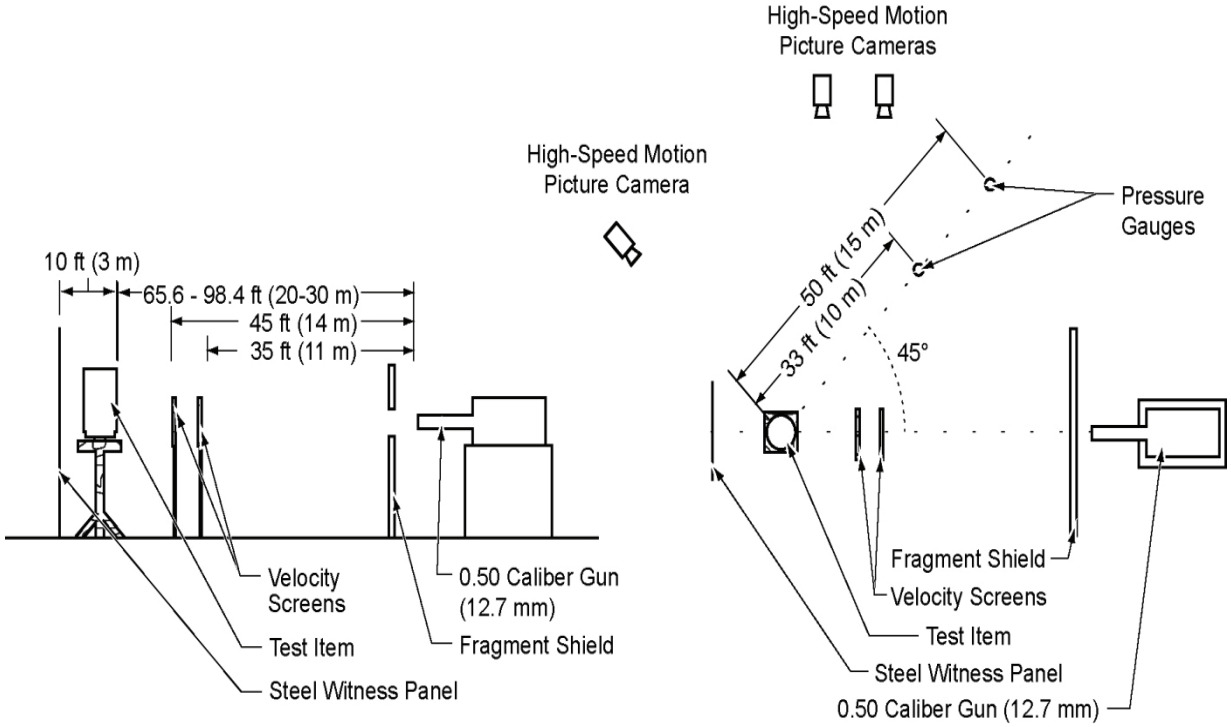

Figure 5-26 EIS Bullet Impact Test Configuration (UN Test 7(d)(i))

(f) Conduct three trials on individual test items (i.e., one bullet into each test item).

(4) Criteria and method of assessing results.

(a) A positive (+) result is characterized by complete fragmentation of the test item (i.e., detonation (Type I), partial detonation (Type II) or explosion (Type III) (see App B)).

(b) Any other result (i.e., no reaction, burn (Type V) or deflagration (Type IV, see, App B)) is a negative (–) result.

(*c*) A substance that produces a positive (+) result on any one of the six trials is not an EIS.

f. UN Test 7(e)—EIS External Fire.

(1) *Introduction*. The test determines the substance reaction to an enveloping fire when confined in the standard test item.

(2) Apparatus and materials.

(a) Fifteen standard test items (see Figure 5-25) loaded with the substance must be prepared.

(b) Sufficient fuel (i.e., wood) to maintain a fire for 30 minutes or until the items have sufficient time to react.

(c) A metal grid to support the products approximately 1– 3 ft (0.3 – 1m) above the fire.

(d) Ignition devices to ignite the fire on at least two sides. (NOTE: Electrically initiated thermite grenades, propellant bags with electric igniters, or electrically initiated black powder have been successfully used to ignite both wood and fuel fires.)

(e) Steel straps to retain the stack configuration during the fire.

(f) Figure 5-27 provides a schematic of typical wood fire configuration.

(3) Procedure.

(a) The test items should be positioned with the longitudinal axis horizontal and should be banded together on the support grid. Either a single trial with all fifteen test items or three separate trials with five test items each stacked two high with three test items on the bottom must be conducted.

(b) Place four thermocouples 1.6 – 2.4 in (40 – 60 mm) from the external surface of the test items in a horizontal plane through the centerline of the stack.

(c) An acceptable method to produce a wood fire that burns with sufficient intensity and duration to typically cause test item reaction within 10 to 30 minutes is described below:

1. Pile air-dried wood in the form of a lattice beneath the support grid.

2. Surround the package (or packages) with wood. Figure 5-27 shows a lattice arrangement. Other configurations (e.g., “tee-pee”) are acceptable. (NOTE: Wood should not be stacked around the test items such that it could interfere with the flight of projections.)

3. Saturate the wood with a liquid fuel (e.g., kerosene, gasoline or diesel fuel).

4. Ignite the pile simultaneously on two sides using a remotely initiated ignition device.

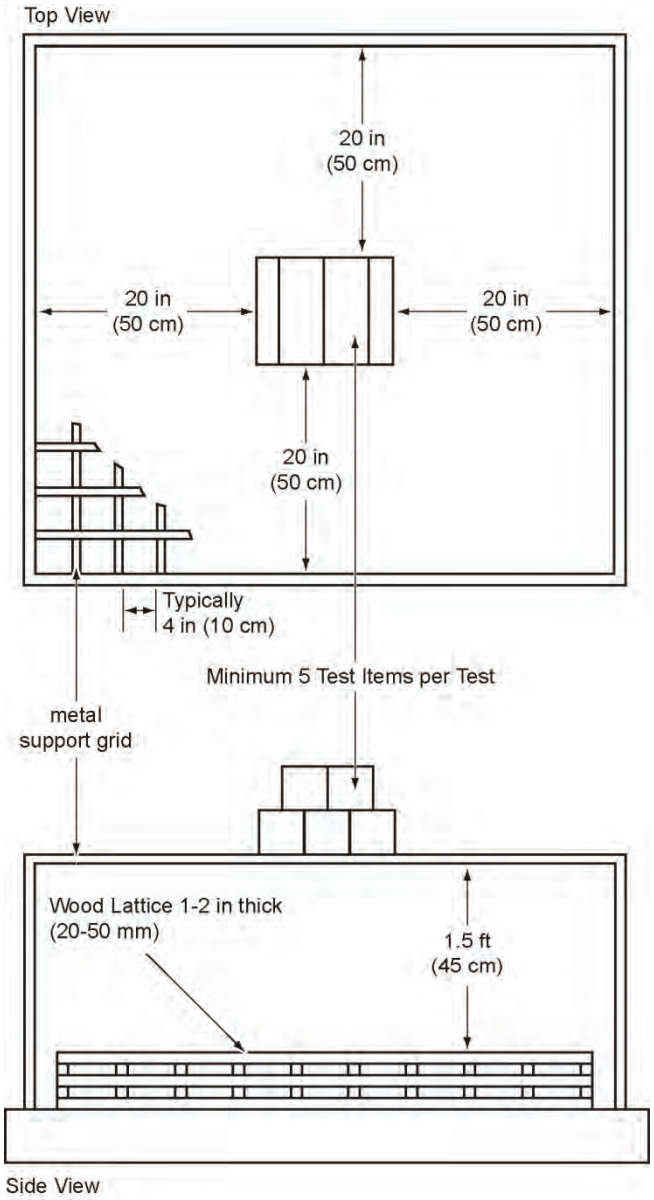

Figure 5-27 EIS External Fire (Bonfire) Test Configuration (UN Test 7(e))

(4) Criteria and method of assessing results.

(a) A positive (+) result is characterized by recovery of a single test item case piece weighing more than 15.4 gr (1 g) farther than 50 ft (15 m) from the fire site.

(b) Any other result is negative (–).

(*c*) A substance that produces a positive (+) result is not an EIS.

g. UN Test 7(f)—EIS Slow Cook-off.

(1) *Introduction*. This is test is used to determine the substance reaction to a gradually increasing temperature.

(2) *Apparatus and materials*. Figure 5-28 illustrates a suggested test configuration.

(a) The substance must be tested in the standard test item shown in Figure 5-25. Three test items, one per test, must be tested.

(b) An oven that provides a minimum of 8 in (203 mm) separation distance between all outer surfaces of the test item and the oven inner walls and that provides a linear heating rate of 6 ± 1°F/hr (3.3 ± 0.5°C/hr) between 104°F (40°C) and 689°F (365°C) must be used. (NOTE: A means of relief should be provided for increased air pressure that is generated in the oven due to heating. A circulation fan should also be used to insure temperature uniformity.)

(c) Thermocouples should be used to monitor the oven temperature and the test item surface temperature at 10 minute intervals (minimum). (NOTE: Continuous monitoring is preferred. The thermocouples should have an accuracy of ± 2% between 104°F (40°C) to 689°F (365°C).)

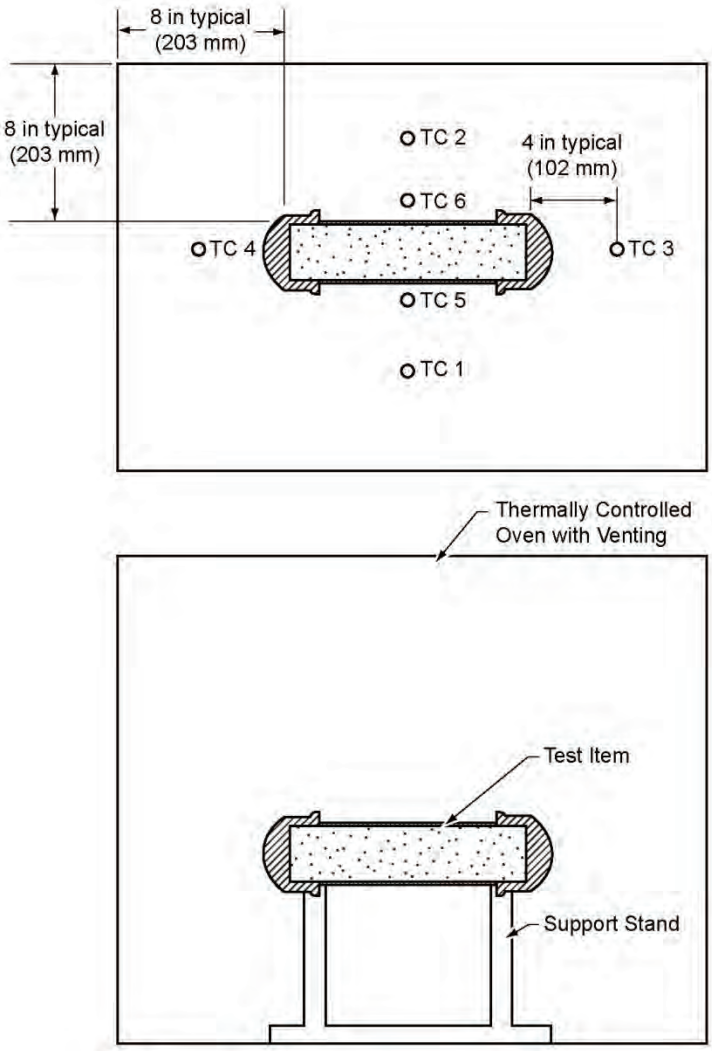

Figure 5-28 EIS Slow Cook-off Test Configuration (UN Test 7(f))

(3) Procedure.

(a) Position a single test item on the support stand within the oven. Condition the test item at 131 ± 2°F (55 ± 1°C) below the expected reaction temperature for 8 hours or until thermal equilibrium is reached.

(b) Increase the air temperature linearly at 6 ± 1°F/hr (3.3 ± 0.5°C/hr) until reaction occurs or 689°F (365°C) is reached.

(c) Conduct three trials on three different samples.

(4) Criteria and method of assessing results.

(a) A positive (+) result is characterized by fragmentation of either or both test item end caps and fragmentation of the test item cylinder into more than three pieces. (NOTE: A crack or split in an end cap is not a positive (+) result.)

(b) Any other result is negative (–).

(c) A substance that produces a positive (+) result is not an EIS.

h. *Sympathetic Reaction*. The SR test must be conducted in accordance with paragraph 5-5*d*.

(1) Criteria for assessing results.

(a) Detonation (Type I) or partial detonation (Type II, see App B) reactions of any acceptor are positive (+).

(b) Any other acceptor reaction is negative (–).

(c) AE with a positive (+) result cannot be assigned to HD 1.6.

i. *Liquid Fuel/External Fire*. The Liquid Fuel/External Fire test must be conducted in accordance with paragraph 5-5*e*.

(1) Criteria for assessing results.

(a) Detonation (Type I), partial detonation (Type II), explosion (Type III) and deflagration (Type IV, see App B) AE reactions are positive (+).

(b) Any other reaction is negative (–).

(c) AE with a positive (+) result cannot be assigned to HD 1.6.

j. *Slow Heating*. The Slow Heating test must be conducted in accordance with paragraph 5-6*d*.

(1) Criteria for assessing results.

(a) Detonation (Type I), partial detonation (Type II), explosion (Type III) and deflagration (Type IV, see App B) AE reactions are positive (+).

(b) Any other reaction is negative (–).

(c) AE with a positive (+) result cannot be assigned to HD 1.6.

k. *Bullet Impact*. The BI test must be conducted in accordance with paragraph 5-6*e*.

(1) Criteria for assessing results.

(a) Detonation (Type I), partial detonation (Type II), explosion (Type III) and deflagration (Type IV, see App B) AE reactions are positive (+).

(b) Any other reaction is negative (–).

(c) AE with a positive (+) result cannot be assigned to HD 1.6.

l. *Fragment Impact UN Test 7(l). 1.6 article (or component level) fragment impact test.* This test is used to determine the response to a localized shock input representative of a fragment strike typical of that produced from a nearby detonating article.

(1) Apparatus and materials. To reduce variability due to yaw, a gun system is recommended for firing a standard 0.041 lbs (18.6 gram) steel fragment in the shape of a right-circular cylinder with a conical nose, as detailed in Figure 5-29, at a candidate Division 1.6 article. The distance between the firing device and the test item should ensure that the fragment is ballistically stable at impact. The following are required:

(a) Test items.

(d) Device or devices to measure the impact velocity of each bullet.

(e) A restraint device capable of preventing AE dislodgment during Fragment Impact.

(f) Video or motion picture cameras (both high speed and normal speed).

(g) Air-blast overpressure gages.

(2) Procedure. Figure 5-30 is a typical setup for 1.6 article fragment impact test. The test is repeated in two different orientations, striking the test item in the most vulnerable areas. The specific test plans must be approved by the Service Hazard Classifiers and the Chairman DDESB. These are areas for which an assessment of the explosive sensitivity (explosiveness and sensitiveness) combined with knowledge of the article design indicate the potential for producing the most violent response level. Typically, one test

would be conducted targeting a non-EIS boostering component and the second test would target the centre of the main explosive load. The orientation of impact should generally be normal to the outer surface of the article. The fragment impact velocity should be 8300 ± 300 ft/sec (2530 ± 90 m/s).

(a) Color still photographs are taken to document the condition of the test item and the test equipment before and after the test. Explosive substance remains, fragmentation, blast, projections, cratering, witness plate damage, and thrust are documented as an indication of the article's response level.

(b) Color video for the duration of each trial can be vital to assessment of response. In siting the camera(s), it is important to ensure that the field of view will not be obstructed by any of the test facilities or instrumentation and that the field of view will include all necessary information. To classify complex articles containing multiple EIS main explosive loads, fragment impact testing at the individual main load component level should be conducted to fully characterize the article's response level.

(3) Test criteria and method of assessing results. If there is a response level more severe than burning, the result is noted as "+" and the items are not classified as Division 1.6 articles.

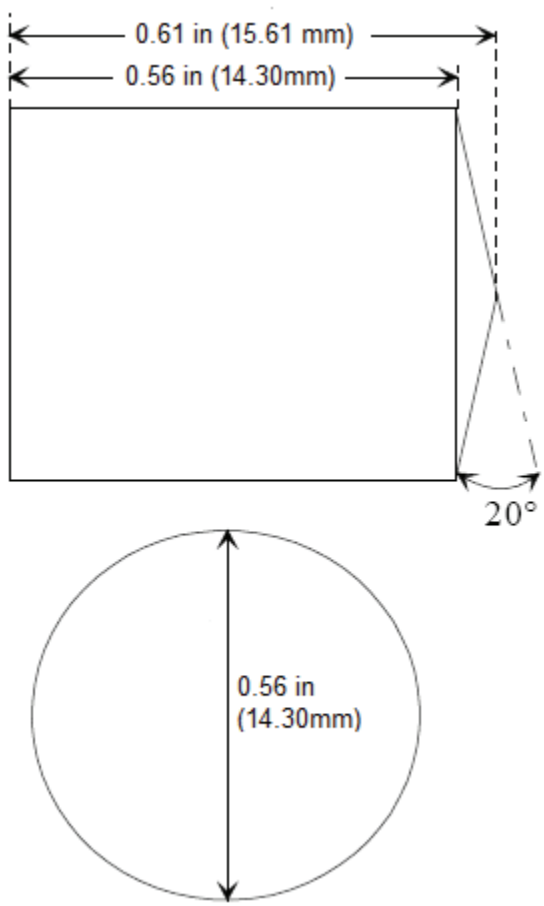

NOTES:
Shape: a conical ended cylinder with the ratio $\frac{\text{L (length)}}{\text{D (diameter)}} > 1$for stability;
Tolerances: ± 0.05 mm and ± 0°30'
Fragment Mass: 18.6 grams
Fragment Material: a mild carbon steel with a Brinell Hardness (HB) less than 270

Figure 5-29 Standard Fragment for 1.6 Article Fragment Impact Test

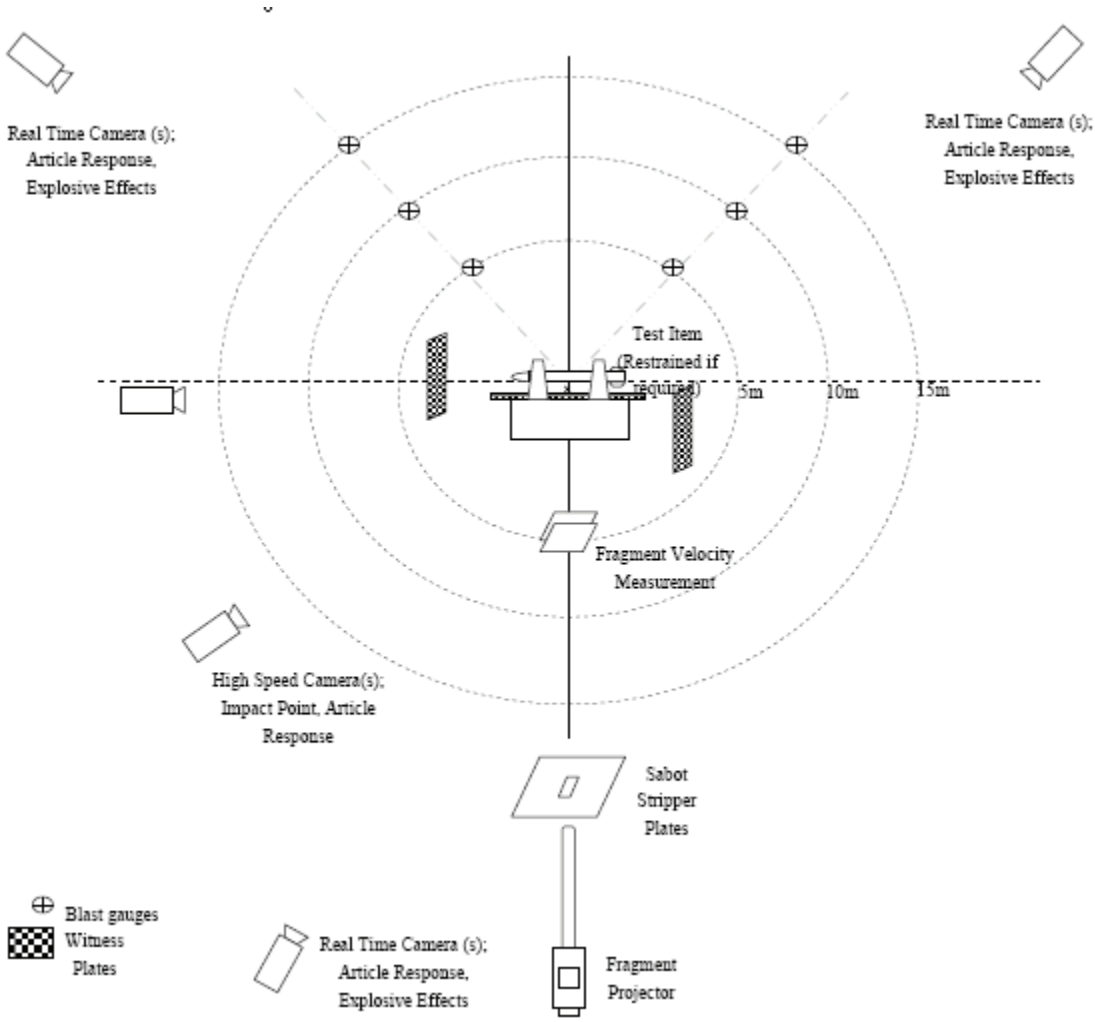

Figure 5-30 **Typical Setup for 1.6 Article Fragment Impact Test**

5-8. Alternate Hazard Division Assignment Tests

a. Introduction. The Single Package (see para 5-5*c*) and SR (see para 5-5*d*) tests are typically not appropriate for solid propellant rocket motors and the DoDC may elect not to perform them. In that case, the DoDC must submit either an alternate test plan to the Chairman, DDESB in accordance with paragraph 3-3*e* or conduct one of the three propellant test options listed in Table 5-9 as well as the LF/EF test described in paragraph 5-5*e*. Rocket motors that are transported singly may be subjected to a LF/EF test on a single article in their transportation configuration (i.e., include all packaging).

Table 5-9
Alternate Solid Propellant Rocket Motor Tests for Single Package and SR Tests

Option #	Name of Test	Reference
1	Super Large Scale Gap	Paragraph 5-8*b*(1)
2	Unconfined Critical Diameter	Paragraph 5-8*c*(1)
	70 kbar Gap	Paragraph 5-8*c*(2)
3	70 kbar Gap	Paragraph 5-8*d*(1)

b. Option 1.

(1) *Super Large Scale Gap Test (SLSGT).* Figure 5-31 presents a schematic of the SLSGT. Preparation of the sample must be such that the motor propellant is accurately represented. The witness plate must not be placed directly on a rigid surface that could impede deformation of the plate. One test must be conducted at a zero gap (i.e., no buffer material).

(2) *Criteria and method of assessing results.* Propellants that maintain a stable detonation as evidenced by the velocity pins and the witness plate are classified as HD 1.1. No further testing is required if the projection hazard assessment determination (see para 6-3*b*) for the rocket motor does not exceed the default value of 1250 ft (381 m). To be classified HD 1.3, the propellant must exhibit a decaying reaction approaching the velocity of sound in the propellant and meet the requirements of the LF/EF test. (NOTE: The result is positive (+) if the witness plate is completely penetrated.)

(3) *Reporting Requirements.* Test and sample set-up (diagram and photographs), propellant description (formulation, sample density), raw pin data, reaction velocity versus pin distance plots, witness plate and recovered case projection photographs are required. If available, also provide video/film records, and blast gauge data.

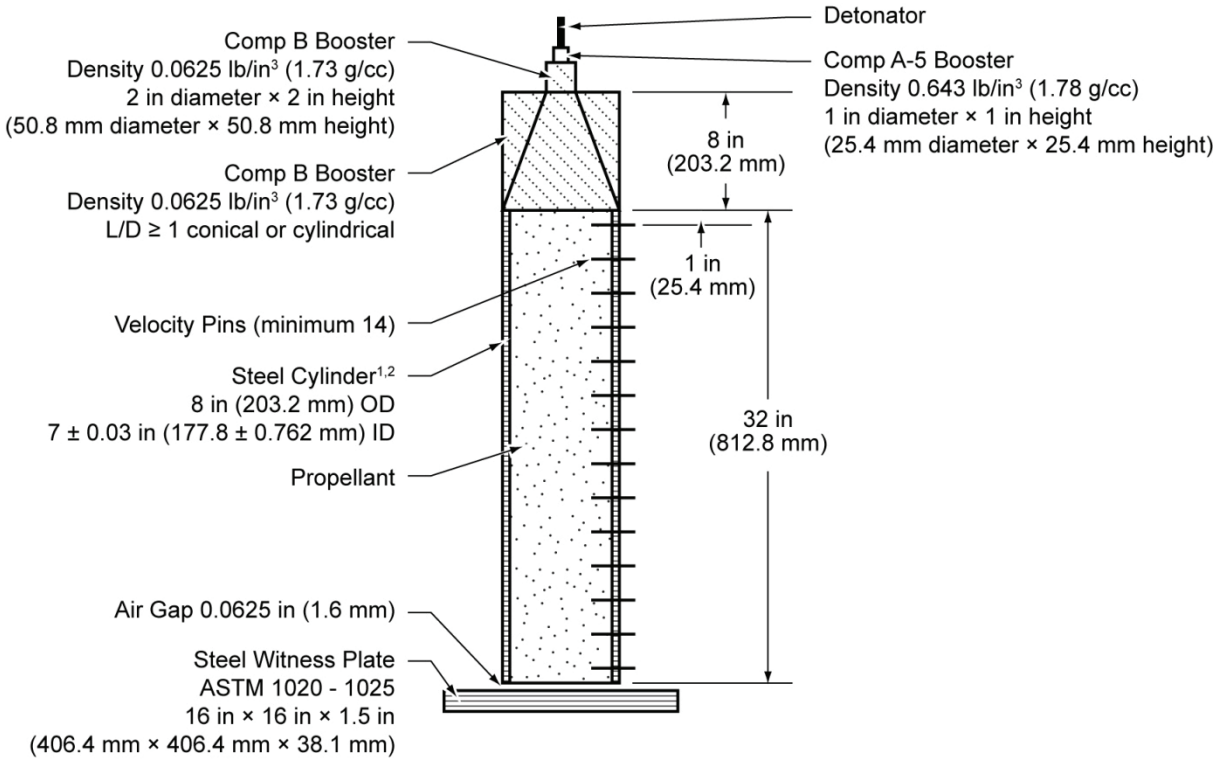

NOTES: 1. ASTM 1026 welded tube drawn over mandrel (DOM) A513.
2. Two 16 in (406.4 mm) cylinders may be used. A small amount of silicon grease should be used to mate the two cylinders.
3. An air gap of at least 2 in (5.08 cm) is required between the witness plate and any solid surface to which the witness plate might be abutted.
4. The boosters must be in accordance with appropriate specifications (to include density)

Figure 5-31 Super Large Scale Gap Test Configuration

c. Option 2. This option requires that a propellant size at or above the Critical Diameter (CD) be determined and a sample at least 1.5 times that size be subjected to a 70 kbar shock.

(1) *Unconfined Critical Diameter Test.* This test provides data that will determine the diameter for the subsequent 70 kbar Gap Test. Figure 5-32 presents a schematic of the Unconfined Critical Diameter Test that must be used.

(*a*) Preparation of the propellant sample must be such that the motor propellant is accurately represented. The witness plate must not be placed directly on a rigid surface that would impede deformation of the plate. One test must be conducted.

(b) Criteria and method of assessing results. For any sample diameter at which a stable detonation occurs (see para 5-8*b*(2)) as evidenced by the velocity pins and the witness plate, that diameter is considered to be greater than or equal to the CD.

(c) Reporting requirements. Test and sample set-up (diagram and photographs), booster material and configuration, propellant description (formulation, sample density), raw pin data, reaction velocity vs. pin distance plots, and witness plate photographs are required. If available, also provide video/film records, and blast gauge data.

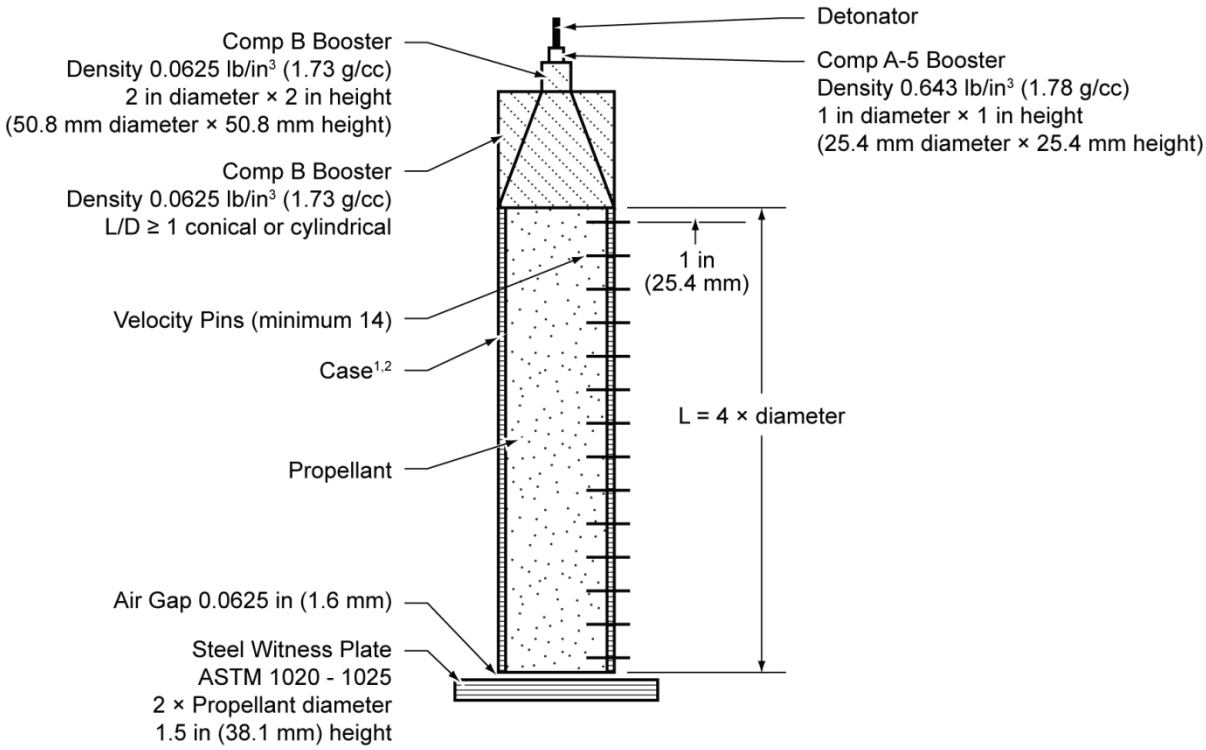

NOTES: 1. Case used for casting propellant sample.
2. L = Length of tube. D = OD of tube.
3. An air gap of at least 2 in (5.08 cm) is required between the witness plate and any solid surface to which the witness plate might be abutted.
4. The boosters must be in accordance with appropriate specifications (to include density)

Figure 5-32 Unconfined Critical Diameter Test Configuration

(2) *70 kbar Gap Test*. Figure 5-33 presents a schematic of the 70 kbar Gap Test that must be used. The propellant sample diameter must be at least 5 in (127 mm) or at least 1.5 times the CD of the propellant (demonstrated as specified above), whichever is greater. Preparation of the sample must be such that the motor propellant is accurately represented. The propellant sample must be contained in a case that affords confinement equivalent to that provided by the propellant and rocket motor case. The witness plate must not be placed directly on a rigid surface that would impede deformation of the plate. One test must be conducted at 70 kbar shock pressure at the output end of the gap material (i.e., input to the propellant sample under test).

(a) Criteria and method of assessing results. Propellants that maintain a stable detonation as evidenced by the velocity pins and the witness plate are hazard classified HD 1.1. No further testing is required if the projection hazard assessment determination (see para 6-3*b*) for the rocket motor does not exceed the default value of 1250 ft (381 m). To be classified HD 1.3, the propellant must exhibit a

decaying reaction approaching the velocity of sound in the propellant and meet the requirements of the LF/EF test.

(b) Reporting requirements. Test and sample set-up (diagram and photographs), propellant description (formulation, sample density), identification of booster material, booster/attenuator calibration, raw pin data, reaction velocity vs. pin distance plots, witness plate and recovered case projection photographs are required. If available, also provide video/film records, and blast gauge data.

d. Option 3.

(1) *70 kbar Gap Test*. Figure 5-33 presents a schematic of the 70 kbar Gap Test that must be used. Sample diameter must be equal to the motor diameter. Preparation of the sample must be such that the motor propellant is accurately represented. The propellant sample must be contained in a case that affords confinement equivalent to that provided by the propellant and rocket motor case. The witness plate must not be placed directly on a rigid surface that would impede deformation of the plate. One test must be conducted at 70 kbar shock pressure at the output end of the gap material (i.e., input to the propellant sample under test).

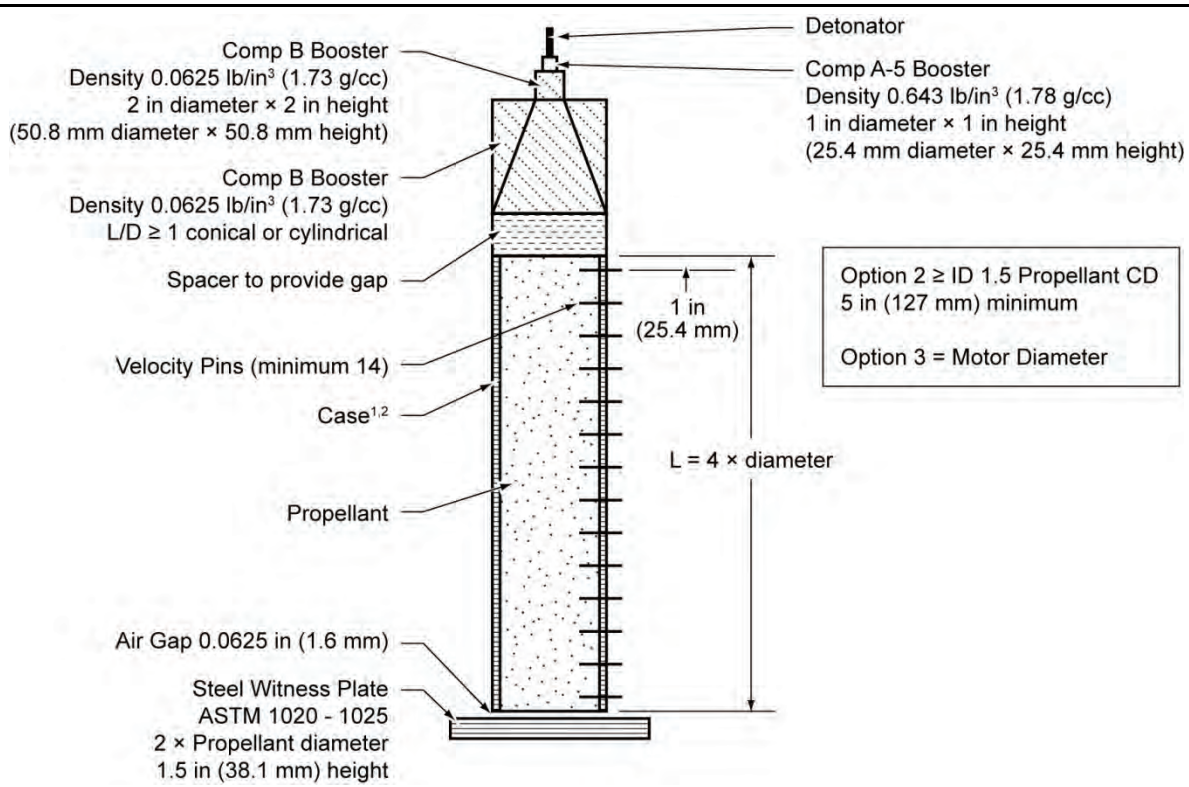

NOTES: 1. Case confinement equivalent to that provided by the propellant and rocket motor case .
2. L = Length of tube. D = OD of tube.
3. Spacer sized to provide 70 kbar pressure at end of gap.
4. An air gap of at least 2 in (5.08 cm) is required between the witness plate and any solid surface to which the witness plate might be abutted.
5. The boosters must be in accordance with appropriate specifications (to include density)

Figure 5-33 70 kbar Gap Test Configuration

(2) *Criteria and method of assessing results*. A propellant that maintains a stable detonation as evidenced by the velocity pins and the witness plate is classified HD 1.1. No further testing is required if the projection hazard assessment determination (see para 6-3*b*) for the rocket motor does not exceed the default value of 1250 ft (381 m). To be classified HD 1.3, the propellant must exhibit a decaying reaction approaching the velocity of sound in the propellant and meet the requirements of the LF/EF test.

(3) *Reporting requirements*. Test and sample set-up (diagram and photographs), propellant description (formulation, sample density), identification of booster material, booster/attenuator calibration, raw pin

data, reaction velocity versus pin distance plots, witness plate and recovered case projection photographs are required. If available, also provide video/film records, and blast gauge data.

5-9. Test for Exclusion from Class 1

a. *Introduction*. This test determines whether AE containing an explosive substance may be excluded from Class 1. This test only applies to AE designed to maintain structural integrity prior to explosive substance reaction during exposure to a fire.

(1) *Apparatus and materials*. The following are required:

(a) Three unpackaged AE modified to be functioned remotely.

(b) A single thermocouple positioned on the outside surface of the AE. (NOTE: The thermocouple must be positioned to record the highest temperature produced during functioning. If that location is not known, additional thermocouples must be used to evaluate multiple locations in order to measure the highest temperature.)

(c) An impulse sound level meter and a video camera with recorder. A still camera is desirable to document the setup and post-test condition of the item.

(2) Procedure.

(a) If the AE has its own means of initiation (see App B), it must be used to function the item. If the AE does not have its own means of initiation, another form of stimulus (e.g., an igniter or detonator) sufficient to ensure ignition or initiation of the AE must be used to cause the AE to function in the designed mode. (NOTE: The functioning procedure used for the Single Package test (see para 5-5*c*) may be used.)

(b) Conduct three trials unless a failure occurs, indicating exclusion from Class 1 is not appropriate and continuing with this testing is not prudent.

(c) Record the maximum temperature.

(d) Record the condition of the AE after functioning and review the video record for evidence of projections, fire, or smoke.

(e) Record the impulse sound level at a point 18 in (46 cm) from the article.

(3) Criteria and method of assessing results. The AE may be excluded from Class 1 if as a result of the explosives reacting all of the following criteria are met:

(a) No smoke is visible.

(b) The casing of the AE is not cracked or ruptured.

(c) No projections are produced.

(d) No fire is visible.

(e) The impulse sound level of the AE functioning does not exceed 140 dBA at a point 18 in (46 cm) from the AE. (NOTE: 140 dBA impulse sound level is extremely loud. If the AE functioning makes little or no sound, that data may be considered as evidence of passing the sound criterion, in lieu of a quantitative measurement.)

(f) The temperature of the AE surface does not exceed 400°F (205°C).

CHAPTER 6 Instrumentation, Interpretation of Results

6-1. Introduction

This chapter provides the details of the assessment methodologies used to analyze and report the results of the HD assignment tests described in Chapter 5. These include measurement and analysis of:

a. Air-blast

b. Projection hazards

c. Thermal flux and firebrand hazards

6-2. Air-blast Measurements

These measurements assist with the determination of AE reactions (i.e., burn (Type V), deflagration (Type IV), explosion (Type III), partial detonation (Type II) or detonation (Type I, see App B)) in the Single Package test, SR test, LF/EF test, Slow Heating test, BI test, or Fragment Impact test described in Chapter 5. In addition, the measurements may be used to determine the air-blast contribution of HD 1.3 or HD 1.2 AE to events in mixed storage.

a. *Blast parameters*. Analysis of the classical blast waveform illustrated in Figure 6-1 is used to determine:

(1) Peak or maximum overpressure (i.e., pressure at the instant of pulse arrival).

(2) Positive phase duration (i.e., the interval between shock arrival and the time at which the overpressure returns to local ambient pressure).

(3) Positive phase impulse (i.e., the integral of the overpressure-pulse from the time of shock arrival to the end of the positive phase).

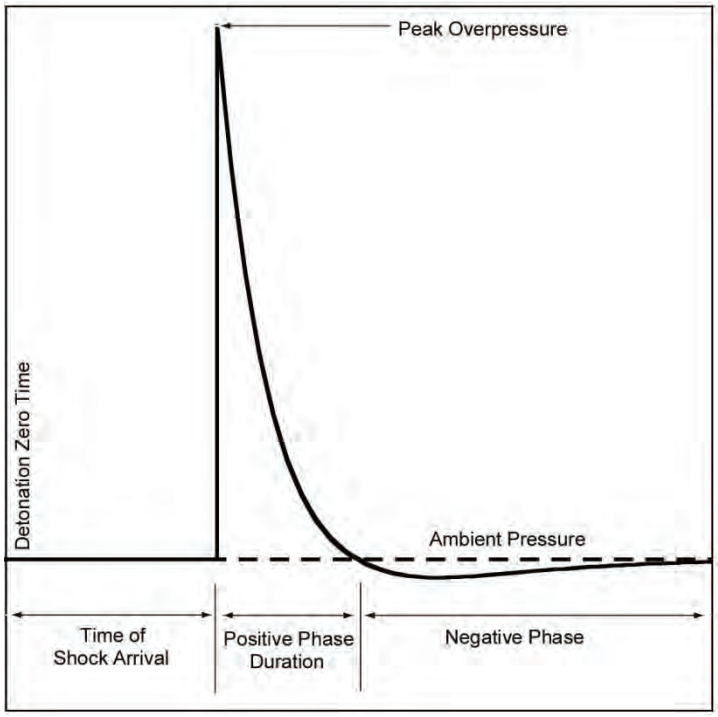

Figure 6-1 Classical Air-blast Overpressure Curve

b. *Data acquisition system*. Typically, it consists of:

(1) Transducers (e.g., electromechanical or electronic) with frequency response adequate to resolve the blast pressure pulse. (NOTE: A system frequency response of at least 0.01 Hz-20 kHz is adequate for tests of AE with NEW less than 2200 lb (1000 kg).)

(2) Signal conditioning equipment.

(3) Recording and reproduction devices.

c. Transducer location and calibration.

(1) Transducers should be positioned at distances that produce approximately 10, 5, 1, 0.5 psi (70, 35, 7, and 3.5 kPa) based on a pre-test estimate of the AE yield. (NOTE: The DDESB Blast Effects Computer, reference (A.28), may be used to estimate these distances.)

(2) At least two lines of transducers should be employed positioned at least 90º apart. (NOTE: If the AE has a line of symmetry, one line of transducers should be placed along this line.)

(3) The gauges should either be mounted flush with the ground or in aboveground fixtures designed to minimize obstruction of the pressure flow (i.e., the sensing face of each gauge is parallel to the direction of flow).

(4) The gauges should be calibrated prior to the tests. (NOTE: The testing activity is responsible for continually maintaining up-to-date dynamic calibration data for gauges.)

(5) An electronic calibration pulse simulating that of the anticipated peak pressure should be recorded immediately before each test. (NOTE: It is useful, but not mandatory, to detonate a hemispherical TNT charge at the test site for the purposes of site and system calibration. The blast pressure measurements recorded are used to calibrate or normalize the entire recording system—from the test site itself to the recording and playback equipment.) If such a calibration is used, the explosive weight of the TNT hemisphere should be approximately the same as the expected yield for the test item. The calibration charge should be detonated on the ground at the center of the transducer array (i.e., the same location as the test item). If it is planned that some sort of reflecting surface such as a steel plate or a concrete pad is to be located under the test item, then the same type of surface should be placed under the calibration charge.

d. Data analysis. All pressure-time records will be analyzed to determine peak pressure and positive phase impulse normalized to sea level (SL) conditions (i.e., atmospheric pressure 14.7 psi (101.3 kPa) and atmospheric temperature 59ºF (15ºC)).

(1) Record the test site (TS) barometric pressure (P_{TS}), ambient air temperature (T_{TS}), and wind velocity and direction.

(2) Convert the measured conditions to SL using:

(a) $P_{SL} = P_{TS} \times F_P$

(b) $R_{SL} = R_{TS} \times F_R$

(c) $t_{SL} = t_{TS} \times F_T$

(d) $I_{SL} = I_{TS} \times F_I$

where P is pressure (psi or kPa)
R is distance (ft or m)
t is time (ms)
I is impulse (psi-ms or Pa-s)
P, R, t, and I are in consistent units (English or SI)
$F_p = (P_{SL}/P_{TS})$
$F_R = (P_{TS}/P_{SL})^{1/3}$
$F_T = (P_{TS}/P_{SL})^{1/3} \times (T_{TS}/T_{SL})^{1/2}$
$F_I = (P_{SL}/P_{TS})^{2/3} \times (T_{TS}/T_{SL})^{1/2}$

(3) Record both the blast measurements taken at the test site and the measurements converted to SL.

e. *Equivalent Explosive Weight (EEW).* The EEW is the weight of a bare TNT hemisphere on flat ground, reference (A.29) that produces the same free-field overpressure or impulse at a given distance from the test AE.

(1) EEW is expressed as a ratio of the weight of the AE tested to that of TNT.

(*a)* The values of EEW determined on the basis of the pressure and impulse measured at a given location may differ and both will be functions of distance, geometry, and donor configuration.

(*b)* EEW is accurate only if the observed waveform is similar to the classical form shown in Figure 6-1 and if the geometry of the test AE is similar to that of the TNT standard. Most reference TNT data was generated for hemispherical charges while many AE are cylindrical. Figure 6-2 provides a comparison of the peak pressure produced by a cylinder (i.e., 5:1 length to diameter) to a hemisphere of the same explosive.

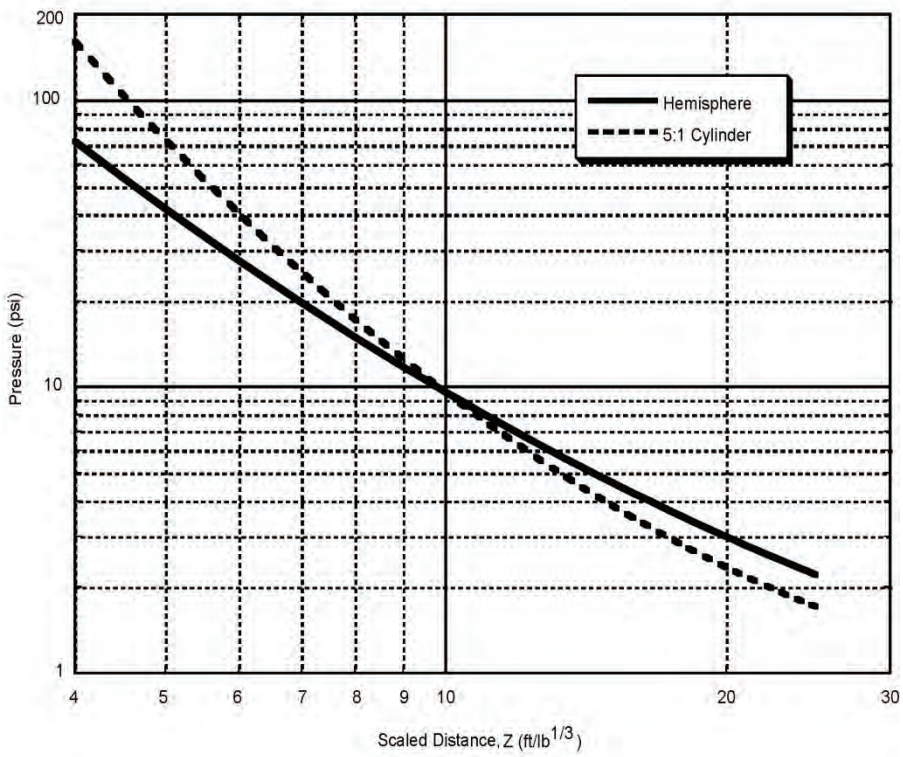

Figure 6-2 Hemispherical and Cylindrical Air-blast Overpressure

(2) EEW based on peak pressure (P) is:

$$\text{EEW (pressure)} = (R_{article}/R_{standard})^3_{P\ =\ constant}$$

Figure 6-3 provides an example of how to compute EEW using test data and reference data at different pressure levels.

(3) EEW based on impulse is:

$$\text{EEW (impulse)} = (I_{article}/I_{standard})^3 \text{ or } (R_{article}/R_{standard})^3$$

(4) Since both impulse and distance are scaled according to the cube root of the explosive weight, finding the point on the standard impulse-distance curve corresponding to a measured value from the test data requires finding the intersection of a line of slope one (on a log-log plot) passing through the test data and intersecting the standard curve. Figure 6-4 provides an example of how to compute EEW based on impulse.

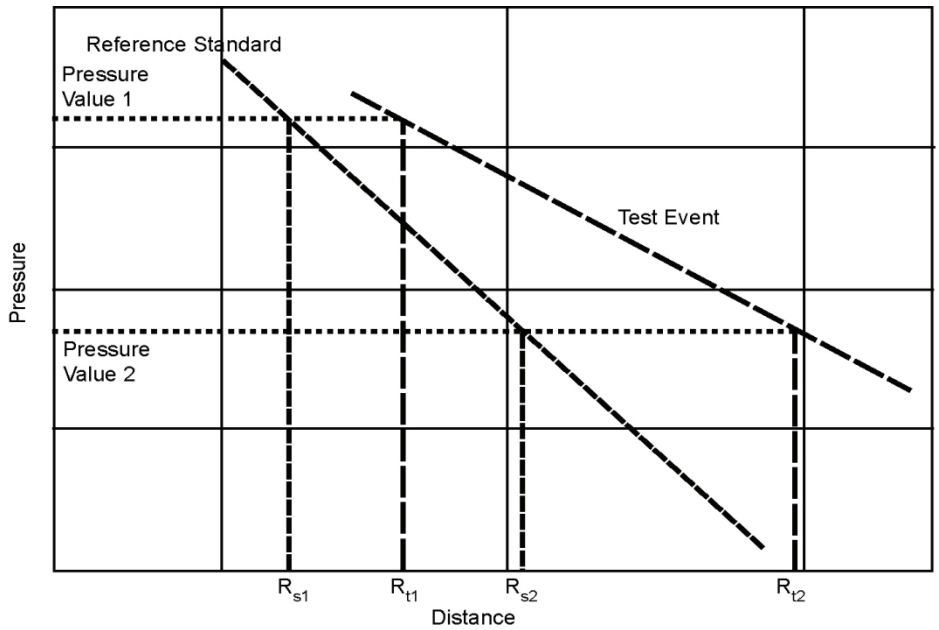

Figure 6-3 Computation of EEW from Test and Reference Data

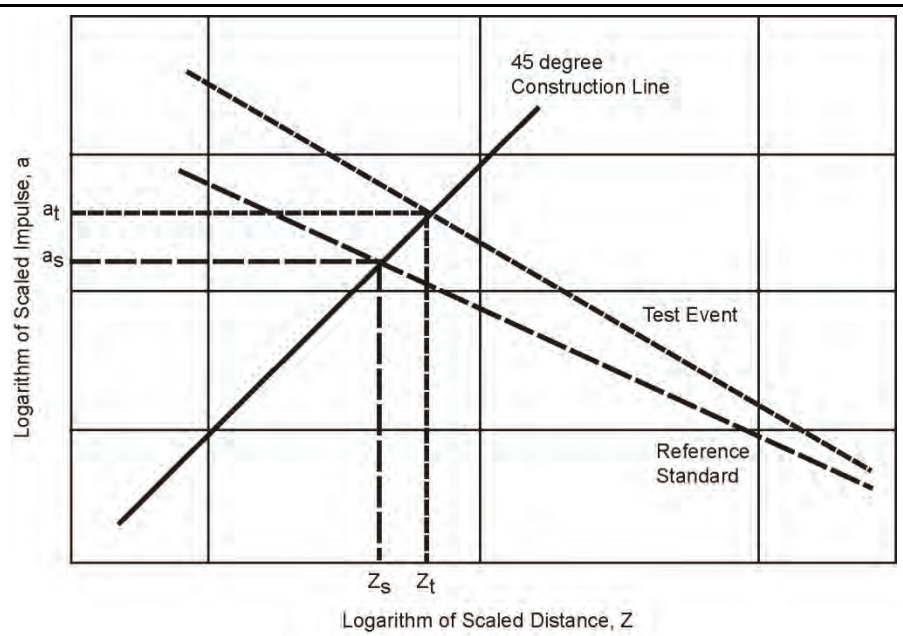

Figure 6-4 Computation of EEW from Test and Reference Impulse Data

(5) EEW should be provided in both graphical and tabular form as a function of the scaled range. In addition, an average EEW based on each parameter should be provided.

(6) EEW_{MAX} is the largest of the EEW determined for either peak overpressure or positive phase impulse averaged over the range 10 – 0.5 psi (70 – 3.5 kPa) for the geometry of the donor.

(7) NEWQD is the EEW_{MAX} for the AE (including HD 1.1 and HD 1.3 contributions) minus the EEW_{MAX} for only the HD 1.1 component of the AE, and then added to the HEW (see App B) for the AE.

(8) The NEWQD of HE and High Explosive Incendiary (HEI) cartridges, 30 mm and smaller, that are assigned to HD 1.2 will not include the PW of the propelling charge.

(9) In some cases, based on physical evidence, it is possible to reach the conclusion that HD 1.3 AE did not contribute to the air-blast produced by detonation of HD 1.1 AE. For example, a HE warhead detonation might project the rocket motor a short distance where the propellant subsequently burns. If the rocket motor case is substantially intact, showing no evidence of a detonation reaction, the NEWQD is equal to the HEW of the warhead. Similarly, recovery of all or a substantial portion of an unreacted rocket motor grain or propelling charge may establish non-contribution. For this reason, it may be prudent to conduct testing of an all-up-round or cartridge before testing the HE component alone.

*(*10) Testing has been conducted to determine maximum contributions of certain propellants when in configurations with HE warheads or projectiles, reference (A.30). These tests resulted in a contribution of 0% for single and double base gun propellants (5 in (127 mm) diameter or less), 50% for composite rocket propellants, 100% for gun propellants (greater than 5 in diameter), 100% for double base rocket propellants, 100% composite/double base rocket propellants, and 125% for high energy propellants. When specific test data are available, they shall be used for determination of maximum propellant contribution to the NEWQD. When such data are not available, the above mentioned propellant contributions can be used provided the propellant formulation and AE configuration are analogous.

(11) The NEWQD of HD 1.2.1 AE without HE warheads or HE projectiles may be assigned based on the propellant contribution determined during SR or LF/EF testing or established by other analogous data; however, a HD 1.2.2 classification cannot result from such a reduction of the NEWQD.

6-3. Hazardous Projection Assessment

a. *Introduction*. Projection collection and analysis are required to evaluate projection hazard effects resulting from the SR test (see para 5-5*d*) and the LF/EF test (see para 5-5*e*). The specific collection and analysis technique used will depend on the classification being pursued. For HD 1.2.1, HD 1.2.2, HD 1.3, and HD 1.4 assignment, projection weights and distances must be recorded for use with Figure 5-17. Descriptions of general projection characteristics (e.g., AE component name, firebrand) must also be recorded. Potentially for HD 1.1 and HD 1.2.1, and definitely for HD 1.2.3 assignment, the techniques below (see para 6-3*b* and *c*) are used to determine the parenthetical number placed to the left of the HD (see para 2-4).

b. Evaluation criterion.

(1) The projections to be evaluated are those whose kinetic energy at impact is 58 ft-lb (79 J) or greater. The hazardous fragment/projection distance (parenthetical number) is that distance from the center of the stack at which the hazardous fragment density falls below one per 600 ft^2 (55.7 m^2). For HD 1.1 and HD 1.2.1, the hazardous fragment/projection distance is only required if the distance exceeds 1250 ft (381 m). Determining the hazardous fragment/projection distance is also required for non-mass exploding, fragment producing AE containing more than 1.6 lbs NEWQD to qualify for HD 1.2.2 assignment. For HD 1.2.3, determining the hazardous fragment/projection distance for the MCE is always required. Such determinations may be based on a single AE item test (packaged or bare), an unconfined single package test, or an unconfined sympathetic reaction test, as appropriate. Lacking testing data, the principles of DDESB TP 16, reference (A.29), may be used to assess a munition's hazardous fragment/projection distance, though using TP 16 will result in a conservative estimate.

(2) Injury or damage may result from the thermal and chemical energy content of firebrands. Firebrand density is assessed identically to projection density.

c. *Projection field sampling*. Projection hazards should be determined by a visual search of surface areas. All projections with a mass greater than 1540 gr (100 g) should be located. Two collection procedures, Recovery Sectors or 360° Recovery, are acceptable:

(1) Recovery Sectors.

(a) Figure 6-5 illustrates a typical collection area that has three 5° wide sectors divided radially into 200 ft (60 m) long collection cells to a distance of 1400 ft (420 m) from the detonation point. (NOTE: Greater range or cell dimensions may be used if other data or modeling indicates that it is necessary and sectors must be selected to align with the highest fragment/projection areal densities.)

(b) Begin visual searches of the sectors from the point of detonation.

(c) Record the number of projections found in each sector for each radial increment. If projections are observed beyond the farthest cell in a sector (generally, beyond 1400 ft (420 m)), identify the number, weight and location in the test report.

(d) Compute the density of projections within a cell using:

$D_{r\theta} = 180N_{r\theta}/ (\pi\ r_d\ \Delta r\ \ \Delta\theta)$

where $D_{r\theta}$ is the cell projection density

$N_{r\theta}$ is the number of projections in sector $r\theta$

r_d is the radius of the center of the cell

Δr is the width of the cell and

$\Delta\theta$ is the zone angular increment in degrees (e.g., consider a cell that is 10° wide and extends from 200 ft (60 m) to 400 ft (120 m). For this situation, $\Delta\theta = 10$, $r_d = 300$ ft (90m), and $\Delta r = 200$ ft (60m)).

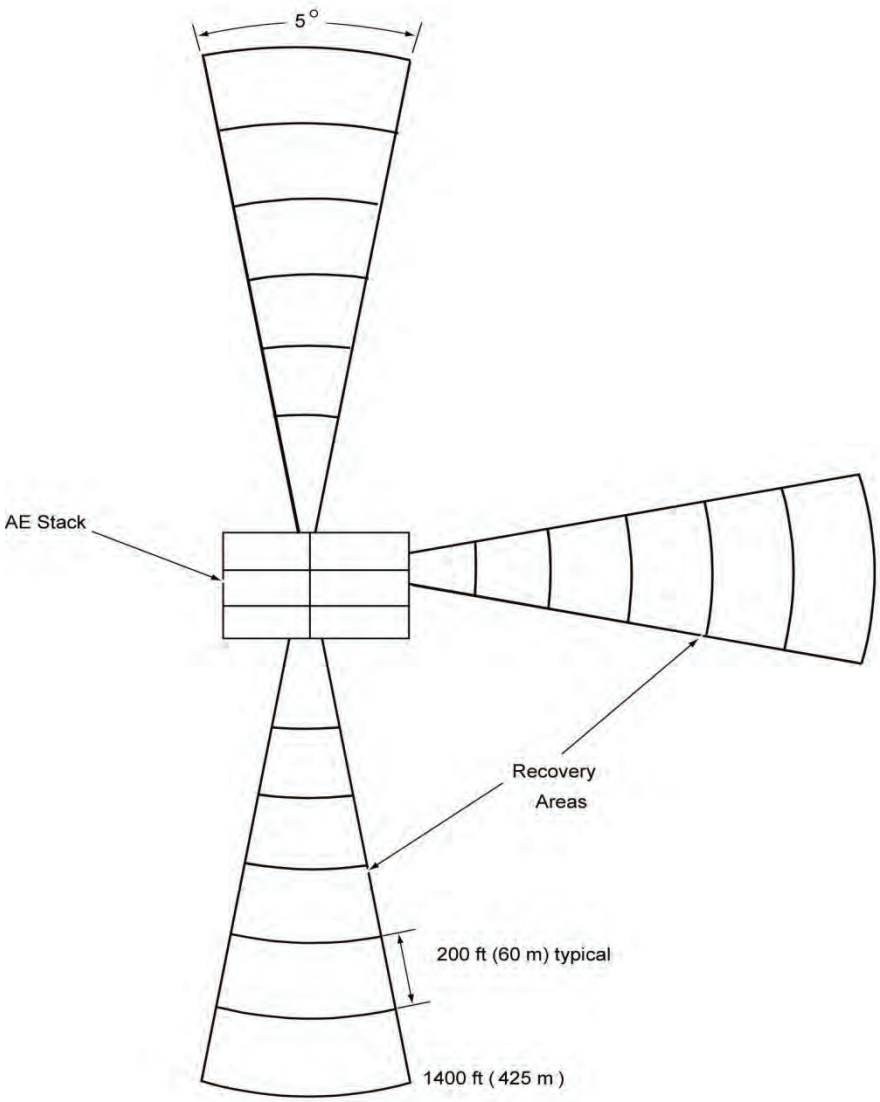

NOTE: Collection areas exceeding 1400 ft (425 m) may be required based on the characteristics of the AE tested.

Figure 6-5 Typical Recovery Sector Configuration for Projection Sampling from SR or LF/EF Tests

(e) Prepare a plot of projection density versus range from the data.

(f) Compute the Modified Pseudo Trajectory Normal (MPTN) density, reference (A.32), by adding to the cell densities one third (0.33) of all material that had to pass through the cell to reach the cells at a greater range. (NOTE: The factor of one third (0.33) accounts for the different trajectory paths (i.e., high angle versus low angle.)

(g) The hazardous projection range is the distance beyond which the MPTN density versus range is less than 1 per 600 ft^2 (55.7 m^2).

(2) 360° Recovery.

(a) Conduct a visual search to locate all projections. Establish realistic bounds (i.e., minimum and maximum angles and distances) for detailed analysis based on the search results.

(b) Select a sector of an annulus within the bounds established as a "projection collection cell." Count the number of projections in the cell and then calculate the projection density within the cell. (NOTE: The procedure described in reference (A.32) is acceptable to calculate the area of the cell.)

(c) Create a second projection collection cell some radial increment further away from the detonation point and calculate the projection density for that sector. (NOTE: The radial length of each sector should be the same.)

(d) Continue to select projection collection cells until the leading edge of the current cell includes the last projection greater than 1540 gr (100 g) recovered.

(e) Record the projection density versus range for each selected azimuth range. (NOTE: The radial coordinate for each cell is the center point of the cell.)

(f) Compute the MPTN density.

(g) The hazardous projection distance is the maximum of all distances (i.e., encompassing the full 360° around ground zero) beyond which the MPTN projection density versus range is less than 1 per 600 ft^2 (55.7 m^2).

(3) *Test reports*. Reports for each of the projection field sampling methods must include:

(a) A plan view of the test area showing AE stack dimensions and the orientation of individual AE in the stack and the locations of search sectors.

(b) The locations of any major pieces of debris, unexploded AE or components.

6-4. Thermal Effects Assessment

a. *Introduction*. The AE thermal effects produced by the LF/EF test (see para 5-5*e*) should be characterized by the measuring the radiation field and evaluating the hazards produced by ejected firebrands.

b. Radiation field data acquisition system.

(1) The characteristics of the radiation field should be measured with a minimum of three radiometers (capable of measuring at least 0.37 kW/ft^2 (4 kW/m^2) in each of two perpendicular lines). (NOTE: Calibration tests may be necessary to provide guidance on the measurement capability and location of the radiometers.)

(2) Time-lapse color photography (one picture every two seconds minimum) should be used to document the size of the thermal source and the combustion zone.

(3) The scaling relationship $(mass)^{2/3}$ / $(distance)^2$, reference (A.33), should be used to determine the flux at 50 ft (15 m) for 220 lb (100 kg) of the AE substance.

c. Firebrand assessment.

(1) Firebrand effects should be documented using the field sampling procedures of paragraph 6-3*c*(2). Plots of the distance and azimuthal locations of each firebrand should be provided with the test report.

(2) Infrared scanners, plastic sheets or wood panels may be used to provide a visual record of the intensity and size of ejected firebrands. Photographs of each ejected firebrand should be provided with the test report.

APPENDIX A - REFERENCES

A.1. Code of Federal Regulations, Transportation, Title 49, Parts 100 to 185, latest revision, published by the National Archives and Records Administration's (NARA) Office of the Federal Register (OFR), and the Government Printing Office (GPO), http://hazmat.dot.gov/regs/rules.htm.

A.2. Department of Defense Directive 6055.9E, *Explosives Safety Management and the DoD Explosives Safety Board*. August 19, 2005, http://www.dtic.mil/whs/directives/corres/html/60559.htm.

A.3. DoDM 6055.09-M, *DoD Ammunition and Explosives Safety Standards.* Under Secretary of Defense for Acquisition, Technology and Logistics, Latest revision. http://www.dtic.mil/whs/directives/corres/html/605509std.htm.

A.4. NATO Standardization Agreement (STANAG) 4123, *Methods to Determine and Classify the Hazards of Military Ammunition and Explosives*, latest revision.

A.5. United Nations, *Recommendations on the Transport of Dangerous Goods—Model Regulations*, revisions adopted by reference (A.1), ST/SG/AC.10/1, United Nations Publication, New York, New York 10017

A.6. United Nations, *Recommendations on the Transport of Dangerous Goods—Tests and Criteria*, revisions adopted by reference (A.1), ST/SG/AC.10/11, United Nations Publication, New York, New York 10017, latest revision including all its Amendments.

A.7. NATO STANAG 4439, *Policy For Introduction, Assessment and Testing for Insensitive Munitions (MURAT*). Latest revision.

A.8. Air Force Interservice Manual 24-204 (TM 38-250, NAVSUP Pub 505, MCO P4030.19H, DLAI 4145.3) *Preparing Hazardous Materials for Military Air Shipments*. Latest revision, www.e-publishing.af.mil/pubs/publist.asp

A.9. NAVSEA OP 4, *Ammunition and Explosive Safety Afloat*, latest revision.

A.10. *International Maritime Dangerous Goods Code*, latest revision, published by International Maritime Organization, London. Latest revision.

A.11. *Dangerous Goods Regulations*, International Air Transport Association, published by International Air Transport Association, Montreal-Geneva, latest revision.

A.12. *Technical Instructions for the Safe Transport of Dangerous Good by Air*, International Civil Aviation Organization, published by International Civil Aviation Organization, Montreal, Quebec, latest revision.

A.13. Simpson, L.R. and Foltz, M. F., UCLR-ID-119665, *LLNL Small-Scale Drop Hammer Impact Sensitivity Test*, January 1995.

A.14. Simpson, L.R. and Foltz, M. F., UCLR-ID-124563, *LLNL Small-Scale Friction Sensitivity (BAM) Test*, June 1996.

A.15. Prokosch, D.W. and Garcia, F., UCLR-JC-117941, *Chemical Reactivity Test for Thermal Stability*, July 1994.

A.16. Simpson, L.R. and Foltz, M. F., UCLR-ID-135525, *LLNL Small-Scale Static Spark Machine: Static Spark Sensitivity Test*, August 1996.

A.17. Allied Ordnance Publication (AOP)-7, *Manual of Data Requirements and Tests for the Qualification of Explosive Materials for Military Use*, latest revision.

A.18. NATO STANNAG 4556, Explosives:Vacuumm Stability Test , latest revision.

A.19. Lu, Pai, ARDEC Solid Gun Propellant Initiation Sensitivity Test, Minutes 26th DDESB Seminar, August 1994.

A.20. NATO STANAG 4396, *Sympathetic Reaction, Munition Test Procedures*, latest revision.

A.21. NATO STANAG 4240, *Liquid Fuel/ External Fire, Munition Test Procedures*, latest revision.

A.22. NATO STANAG 4382, *Slow Heating, Munitions Test Procedures*, latest revision.

A.23. NATO STANAG 4241, *Bullet Impact, Munition Test Procedures*, latest revision.

A.24. NATO STANAG 4375, *Safety Drop, Munition Test Procedures*, latest revision.

A.25. NATO STANAG 4496 Fragment Impact, Munition Test Procedures

A.26. NATO STANAG *4439 Policy for Introduction and Assessment of Insensitive Munitions (IM)*, latest revision,

A.27. AOP-39, Guidance on the Assessment and Development of Insensitive Munitions, latest revision

A.28. DDESB Blast Effects Computer Version 6 Users Manual and Documentation, DDESB Technical Paper 17 (TP-17), latest revision.

A.29. Kingery, C. N. and Bulmash, G. "Airblast Parameters from TNT Spherical Air Burst and Hemispherical Burst" ARBRL-TR-02555, April 1984 (AD B082713) Defense Technical Information Center, Fort Belvoir, VA.

A.30. Swisdak Jr, Michael M., *Maximum TNT Equivalence of Naval Propellants*, NSWC TR 83-120, 23 Feb 1983.

A.31. DDESB *Technical Paper 16 (revision 2) Methodology for Calculating Primary Fragment Characteristics*, 17 October 2005

A.32. DDESB *Technical Paper 21, Procedures for the Collection, Analysis, and Interpretation of Explosion-Produced Debris—Revision* , 22 October 2007.

A.33. Hay, J. C. and Watson, R. W., *Scaling Studies of Thermal Radiation Flux from Burning Propellants*, Minutes, 25th DDESB Seminar, Volume IV, pp. 233-268, August 1992. (AD A26116) Defense Technical Information Center, Fort Belvoir, VA.

APPENDIX B - GLOSSARY

B.1. AMMUNITION

Generic term related mainly to articles of military application consisting of all kinds of bombs, grenades, rockets, mines, projectiles and other similar devices or contrivances.

B.2. AMMUNITION AND EXPLOSIVES (AE)

Includes, but is not necessarily limited to, all items of U.S.-titled (i.e., owned by the U.S. Government through DoD Components) ammunition; propellants, liquid and solid; pyrotechnics; high explosives; guided missiles; warheads; devices; and chemical agent substances and components presenting real or potential hazards to life, property and the environment. Excluded are wholly inert items and nuclear warheads and devices, except for considerations of storage and stowage compatibility, blast, fire, and non-nuclear fragment hazards associated with the explosives.

B.3. ARTICLE, EXPLOSIVE

An article containing one or more explosive substances.

B.4. BURNING REACTION (TYPE V)

Burn (Type V) is the fifth most violent type of munition reaction where the energetic material ignites and burns non propulsively. Primary evidence of a Type V reaction is the low pressure burn of some or all of the energetic material. The casing may rupture resulting in a few large pieces that might include enclosures and attachments. No piece (e.g., casing, packaging or energetic material) travels (or would have been capable of travelling) beyond 15m and with an energy level greater than 20J based on the distance versus mass relationships in AOP-39 (A.27). There is no evidence of thrust capable of propelling the munition beyond 15m. A small amount of burning or unburned energetic material relative to the total amount in the munition may be scattered, generally within 15m but no more than 30m. Secondary evidence may include some evidence of insignificant pressure in the test arena and for a rocket motor a significantly longer reaction time than if initiated in its design mode.

B.5. COMMERCIAL CARRIER

Any conveyance that is not a military carrier.

B.6. COMPATIBILITY

AE are considered compatible if they may be stored or transported together without significantly increasing either the probability of an accident or, for a given quantity, the magnitude of the effects of such an accident.

B.7. COMPETENT AUTHORITY

A national agency responsible under its national law for the control or regulation of a particular aspect of the transportation of hazardous materials (dangerous goods).

B.8. DEFLAGRATION REACTION (TYPE IV)

Deflagration (Type IV) is the fourth most violent type of munition reaction with ignition and burning of confined energetic materials which leads to a less violent pressure release. Primary evidence of a Type IV reaction is the combustion of some or all of the energetic material and the rupture of casings resulting in a few large pieces that might include enclosures and attachments. At least one piece (e.g., casing, packaging or energetic material) travels (or would have been capable of travelling) beyond 15m and with an energy level greater than 20J based on the distance versus mass relationships in AOP-39 (A.27). A reaction is also classified as Type IV if there is no primary evidence of a more severe reaction and there is evidence of thrust capable of propelling the munition beyond 15m. Secondary evidence may include a longer reaction time than would be expected in a Type III reaction; significant scattered burning or unburned energetic material, generally beyond 15m; and some evidence of pressure in the test arena which may vary in time or space.

B.9. DETONATION REACTION (TYPE I)

Detonation (Type I) is the most violent type of munition reaction where the energetic material is consumed in a supersonic decomposition. Primary evidence of a Type I reaction is the observation or measurement of a shock wave with the magnitude and timescale of a purposely detonated calibration test or calculated value and the rapid plastic deformation of the metal casing contacting the energetic material with extensive high shear rate fragmentation. Secondary evidence may include the perforation, fragmentation and-or plastic deformation of a witness plate and ground craters of a size corresponding to the amount of energetic material in the munition.

B.10. DOD COMPONENT (DODC)

A DoD department or agency.

B.11. EOD PERSONNEL

Military personnel who have graduated from the Naval School, Explosive Ordnance Disposal; are assigned to a military unit with a Service-defined EOD mission; and meet Service and assigned unit requirements to perform EOD duties. EOD personnel have received specialized training to address explosive and certain CA hazards during both peacetime and wartime. EOD personnel are trained and equipped to perform RSP on nuclear, biological, chemical, and conventional munitions, and on improvised explosive devices.

B.12. EX NUMBER

A reference number, preceded by the prefix EX, which is assigned by DOT to AE that they have evaluated under the provisions of 49 CFR 173.56, reference (A.1).

B.13. EXPLOSIVE

For the purposes of this document, a substance or a mixture of substances that is capable by chemical reaction of producing gas at such a temperature, pressure, and speed as to cause damage to the surroundings. The term explosive includes all substances variously known as high explosives and propellants, together with igniters, primers, initiators and pyrotechnics (e.g., illuminant, smoke, delay, decoy, flare and incendiary compositions).

B.14. EXPLOSION REACTION (TYPE III)

Explosion (Type III) is the third most violent type of munition reaction with sub-sonic decomposition of energetic material and extensive fragmentation. Primary evidence of a Type III reaction is the rapid combustion of some or all of the energetic material once the munition reaction starts and the extensive fracture of metal casings with no evidence of high shear deformation resulting in larger and fewer fragments than observed from purposely detonated calibration tests. Secondary evidence may include significant long-distance scattering of burning or unburned energetic material; witness plate damage; the observation or measurement of overpressure throughout the test arena with a peak magnitude significantly less than and significantly longer duration than that of a purposely detonated calibration test; and ground craters.

B.15. EXTREMELY INSENSITIVE SUBSTANCE (EIS)

A substance which has demonstrated through tests that it is so insensitive that there is very little probability of accidental initiation.

B.16. FIREBRAND

A burning or hot projection that may transfer thermal energy to the surroundings.

B.17. FRAGMENT

see Projection

B.18. HAZARD CLASS

The category of hazard assigned to a hazardous material under the definitional criteria of 49 CFR 173, reference (A.1) and the provisions of the § 172.101 table. A material may meet the defining criteria for more than one hazard class but is assigned to only one hazard class.

B.19. HAZARD DIVISION

A division or subdivision denoting the character and predominant hazard within UN Classes 1, 2, 4, 5 and 6.

B.20. HAZARDOUS FRAGMENT DISTANCE

The distance at which the hazardous fragment density falls below 1/600 ft^2 (55.7 m^2).

B.21. HAZARDOUS FRAGMENT/HAZARDOUS PROJECTION

A hazardous fragment or a hazardous projection is a fragment or a projection that has an impact energy of 58 ft-lb (79 J) or greater.

B.22. HIGH EXPLOSIVE WEIGHT (HEW)

The weight of explosive substances designed to function by detonation (e.g., main charge, booster or primary explosives).

B.23. MASS EXPLOSION

Explosion that affects almost the entire quantity of AE virtually instantaneously.

B.24. MATERIAL DOCUMENTED AS AN EXPLOSIVE HAZARD (MDEH)

MPPEH that cannot be documented as Material Documented as Safe (MDAS), that has been assessed and documented as to the maximum explosive hazards the material is known or suspected to present, and for which the chain of custody has been established and maintained. This material is no longer considered to be MPPEH.

B.25. MATERIAL POTENTIALLY PRESENTING AN EXPLOSIVE HAZARD (MPPEH)

Material owned or controlled by the Department of Defense that, prior to determination of its explosives safety status, potentially contains explosives or munitions (e.g., munitions containers and packaging material; munitions debris remaining after munitions use, demilitarization, or disposal; and range-related debris) or potentially contains a high enough concentration of explosives that the material presents an explosive hazard (e.g., equipment, drainage systems, holding tanks, piping, or ventilation ducts that were associated with munitions production, demilitarization, or disposal operations). Excluded from MPPEH are munitions within the DoD-established munitions management system and other items that may present explosion hazards (e.g., gasoline cans and compressed gas cylinders) that are not munitions and are not intended for use as munitions.

B.26. MAXIMUM CREDIBLE EVENT (MCE)

In hazards evaluation, the MCE from a hypothesized accidental explosion, fire, or toxic chemical agent release (with explosives contribution) is the worst single event that is likely to occur from a given quantity and disposition of AE. The event must be realistic with a reasonable probability of occurrence considering the explosion propagation, burning rate characteristics, and physical protection given to the items involved. The MCE evaluated on this basis may then be used as a basis for effects calculations and casualty predictions. For HD 1.2.1 and HD 1.2.3, the MCE is expressed as a weight which is the product of the NEWQD and the 1) number of AE which reacts virtually instantaneously in the SR or LF/EF tests, or 2) number of AE in three unpalletized, outer shipping packages. The authorized MCE for a specific HD 1.2.1 or HD 1.2.3 item is listed in the JHCS.

B.27. MILITARY CARRIER

Any conveyance operated by DoD or DOE personnel for the transport of assets owned or in the custody of the U.S. Government.

B.28. MUNITIONS AND EXPLOSIVES OF CONCERN (MEC)

This term, which distinguishes specific categories of military munitions that may pose unique explosives safety risks means: Unexploded Ordnance (UXO), (see 10 USC 101(e)(5); (b) Discarded Military Munition (DMM), (see10 USC 2710(e)(2); or (c) Munitions Constituents (MC) (e.g., TNT, RDX), (see 10 USC 2710(e)(3)), present in high enough concentrations to pose an explosive hazard.

B.29. NET EXPLOSIVE WEIGHT (NEW)

The total weight of all explosives substances (i.e., high explosives weight, propellant weight, and pyrotechnic weight) in the AE, expressed in pounds [kilograms], NEW is used for transportation purposes.

B.30. NET EXPLOSIVE WEIGHT FOR QD (NEWQD)

The total weight, expressed in pounds [kilograms], of all explosive substances (high explosive weight, propellant weight, and pyrotechnic weight) in the AE, unless testing has been conducted to support an approved different value due to the contribution of high explosives, propellants or pyrotechnics. For all HD 1.3 or 1.4 (other than S) AE, NEWQD is equal to NEW. NEWQD is used when applying QD and other criteria in this document. (NOTE: Except per paragraph 6-2*e*(11), for non-mass exploding, fragment producing AE, where high explosives are not present or present in such small quantities that they do not predominate during SR and LF/EF testing, NEWQD is equal to NEW.)No Reaction (Type VI)

B.31. NO REACTION (TYPE VI)

No Reaction (Type VI) is the least violent type of munition response where any reaction is self-extinguished immediately upon removal of the external stimulus. Primary evidence of a Type VI reaction is no reaction of the energetic material without a continued external stimulus; the recovery of all or most of the energetic material with no indication of sustained combustion; and no fragmentation of the casing or packaging greater than from a comparable inert test item. There is no secondary evidence.

B.32. PARTIAL DETONATION (TYPE II)

Partial Detonation (Type II) is the second most violent type of munition reaction where some of the energetic material is consumed in a supersonic decomposition. Primary evidence of a Type II reaction is the observation or measurement of a shock wave with magnitude less than that of a purposely detonated calibration test or calculated value and the rapid plastic deformation of some, but not all, of the metal casing contacting the energetic material with extensive high shear rate fragmentation. Secondary evidence may include scattered burned or unburned energetic material; the perforation, fragmentation and-or plastic deformation of a witness plate; and ground craters.

B.33. PRIMARY EXPLOSIVE

For the purposes of this document, primary explosives are highly sensitive compounds that are typically used in detonators and primers. A reaction is easily triggered by heat, spark, impact or friction. Examples of primary explosives are lead azide and mercury fulminate.

B.34. PROJECTION

Any complete AE, subassembly, pieces thereof, or its packaging that is ejected from the site of a hazard classification test.

B.35. PROPELLANT WEIGHT (PW)

The weight of explosive substances designed to propel projectiles and missiles or to generate gases for powering auxiliary devices. (e.g., rocket motors or gas generators).

B.36. PYROTECHNIC

A mixture of chemicals which, when ignited, is capable of reacting exothermically to produce light, heat, smoke, sound, or gas.

B.37. PYROTECHNIC WEIGHT (PYW)

The weight of explosive substances designed to produce heat, light, sound, smoke or a combination of these.

B.38. RECOVERED CHEMICAL WARFARE MATERIAL (RCWM)

CWM used for its intended purpose or previously disposed of as waste, which has been discovered during a CWM response or by chance (e.g., accidental discovery by a member of the public), that DoD has either secured in place or placed under DoD control, normally in a DDESB-approved storage location or interim holding facility, pending final disposition.

B.39. QUANTITY DISTANCE (QD)

The quantity of explosive material and distance separation relationships that provide defined levels of protection. The relationships are based on levels of risk considered acceptable for specific exposures and are tabulated in applicable QD tables. These separation distances do not provide absolute safety or protection. Greater distances than those in the QD tables should be used if practical.

B.40. SECONDARY EXPLOSIVE

For the purposes of this document, secondary explosives are generally less sensitive to initiation than primary explosives and are typically used in booster and main charge applications. A severe shock is usually required to trigger a reaction. Examples are TNT, and tetryl.

B.41. UNEXPLODED ORDNANCE (UXO)

Generally, military munitions that: (a) have been primed, fuzed, armed, or otherwise prepared for action; (b) have been fired, dropped, launched, projected, or placed in such a manner as to constitute a hazard to operations, installations, personnel, or material; and (c) remain unexploded whether by malfunction, design, or any other cause. (See 10 U.S.C. 101(e)(5).)

B.42. WITH ITS MEANS OF INITIATION

An AE with its normal initiating device, such as a detonator or detonating fuze, assembled to it or packed with it, and this device is considered to present a significant risk during storage and transport, but not one great enough to be unacceptable.

B.43. WITHOUT MEANS OF INITIATION

An AE without its normal initiating device assembled to it or packed with it. The term also applies to an AE packed with its initiating device, provided the device is packed so as to eliminate the risk of causing detonation of the AE in the event of accidental functioning of the initiating device. In addition, the term applies to an AE assembled with its initiating device provided there are protective features such that the initiating device is very unlikely to cause detonation of the AE under conditions that are associated with storage and transport. For hazard classification purposes, a means of initiation that possesses two independent effective protective features is not considered to present a significant risk of causing the detonation of an AE under conditions associated with storage and transport.

APPENDIX C - LIST OF ACRONYMS

° – Degree
ºC – Degree Celsius
ºF – Degree Fahrenheit
µs – Micro second
µ – Micron
ABL – Allegheny Ballistics Laboratory
AE – Ammunition and Explosives
App – Appendix
AP – Armor Piercing
ARDEC – Armament Research, Development and Engineering Center
ASME – American Society of Mechanical Engineers
ASTM – American Society of Testing Materials
BAM – Bundesanstalt fur Materialprufung
CA- Chemical Agent
CBU – Cluster Bomb Unit
CD – Critical Diameter
CFR – Code of Federal Regulations
CG – Compatibility Group
cm – Centimeter
cm^2 – Square centimeter
cm^3 – Cubic centimeter
CWM – Chemical Warfare Material
D – Distance
dBA – Decibel as weighted on the A scale
DDESB – Department of Defense Explosives Safety Board
Defl – Deflagration
Det – Detonation
DoD – Department of Defense
DoDC – Department of Defense Component
DOE – Department of Energy
DOM – Drawn Over Mandrel
DOT – Department of Transportation
EIS – Extremely Insensitive Substance
EEW – Equivalent Explosive Weight
EOD – Explosive Ordnance Disposal
e.g., – For example
Expl – Explosion
FHC – Final Hazard Classification
ft – Feet
ft^2 – Square feet
ft^3 – Cubic feet
ft-lb – Foot-pound
ft-lbf – Foot-pound force
ft/sec – Feet per second
g – Gram
g/cc – Grams per cubic centimeter
gal – Gallon
gr – Grain
HD – Hazard Division
HE – High Explosive
HEI – High Explosive Incendiary
HEW – High Explosive Weight
HPM – High Performance Magazine
hr – Hour
hz – Hertz
I – Impulse
IBD – Inhabited Building Distance
ID – Inside diameter
i.e. – In other words
IHC – Interim Hazard Classification
IM – Insensitive Munitions
in – Inch
in^3 – Cubic Inch
IDN – Initial Distribution Number
J – Joules
JHCS – Joint Hazard Classification System
kbar – Kilobar
kg – Kilogram
kHz – Kilohertz
kPa – Kilopascals
kph – Kilometers per hour
kW – Kilowatt
lb – Pound
lbf – Pound force
L/D – Length divided by Diameter
LF/EF – Liquid Fuel/External Fire
LLNL – Lawrence Livermore National Laboratory
M – Mass/Weight
m – Meter
m^2 – Square meter
m^3 – Cubic meter
MEC – Munitions and Explosives of Concern
MCE – Maximum Credible Event
min – Minute
mg – Milligram
mm – Millimeter
mm^3 – Cubic millimeter
MPa – Megapascal
mph – Miles per hour

MPTN – Modified Pseudo Trajectory Normal
MPPEH – Material Potentially Presenting an Explosive Hazard
ms – Millisecond
m/sec – Meters per second
MSIAC – Munitions Safety Information Analysis Center
N – Newtons
N/A – Not applicable
Nm – Newton meter
NATO – North Atlantic Treaty Organization
NEW – Net Explosive Weight
NEWQD – Net Explosive Weight Quantity Distance
NOL – Naval Ordnance Laboratory
N.O.S. – Not Otherwise Specified
N.R. – Not Regulated
NSN – National Stock Number
OD – Outer Diameter
ORM-D – Other Regulated Material-category D
P – Pressure
Pa – Pascal
P. Det. – Partial detonation
PTS – Barometric Pressure at the test site
PETN – Pentaerythritol tetranitrate
PHMSA – Pipeline and Hazardous Materials Safety Administration
PMMA – Polymethyl methylacrylate
psi – Pounds per square inch
psig – Pounds per square inch gauge
PSN – Proper Shipping Name
PW – Propellant Weight
PYW – Pyrotechnic Weight
QD – Quantity Distance
R – Distance
RCWM – Recovered Chemical Warfare Material
RDX – Cyclonite
Ref – Reference
RSP – Render safe procedures
sec – Second
SDDC – Surface Deployment and Distribution Command
SG – Sensitivity Group
SL – Sea level
SLSGT – Super Large-Scale Gap Test
SR – Sympathetic Reaction
STANAG – Standardization Agreement
t – Time
TTS – Ambient Air Temperature at the Test Site
TC – Thermocouple
TDP – Technical Data Package
TEA – Triethyl aluminum
TIL – Threshold Ignition Level
TNT – Trinitrotoluene
TP – Technical Paper
TPA – Thickened TEA
TS – Test Site
UN – United Nations
U.S. – United States
USC – United States Code
UXO – Unexploded Ordnance
V – Volt
WP – White Phosphorous

RECOMMENDED CHANGES TO PUBLICATIONS AND BLANK FORMS For use of this form, see AR 25-30; the proponent agency is ODISC4.	Use Part II *(reverse)* for Repair Parts and Special Tool Lists (RPSTL) and Supply Catalogs/Supply Manuals (SC/SM).	DATE

TO: *(Forward to proponent of publication or form) (Include ZIP Code)* **Chairman, DoD Explosives Safety Board** **4800 Mark Center Drive, Suite 16E12** **Alexandria, VA 22350-3606**	FROM: *(Activity and location) (Include ZIP Code)*

PART I - ALL PUBLICATIONS (EXCEPT RPSTL AND SC/SM) AND BLANK FORMS

PUBLICATION/FORM NUMBER	DATE	TITLE
TB 700-2	**30 July 2012**	**DoD Ammunition and Explosives Hazard Classification Procedures**

ITEM NO.	PAGE NO.	PARA-GRAPH	LINE NO.*	FIGURE NO.	TABLE NO.	RECOMMENDED CHANGES AND REASON *(Provide exact wording of recommended changes, if possible).*

** Reference to line numbers within the paragraph or subparagraph.*

TYPED NAME, GRADE OR TITLE	TELEPHONE EXCHANGE/AUTOVON, PLUS EXTENSION	SIGNATURE

TO: *(Forward direct to addressee listed in publication)*	**FROM:** *(Activity and location) (Include ZIP Code)*	**DATE**

PART II - REPAIR PARTS AND SPECIAL TOOL LISTS AND SUPPLY CATALOGS/SUPPLY MANUALS

PUBLICATION NUMBER	DATE	TITLE

PAGE NO.	COLM NO.	LINE NO.	NATIONAL STOCK NUMBER	REFERENCE NO.	FIGURE NO.	ITEM NO.	TOTAL NO. OF MAJOR ITEMS SUPPORTED	RECOMMENDED ACTION

PART III - REMARKS *(Any general remarks or recommendations, or suggestions for improvement of publications and blank forms. Additional blank sheets may be used if more space is needed.)*

TYPED NAME, GRADE OR TITLE	TELEPHONE EXCHANGE/AUTOVON, PLUS EXTENSION	SIGNATURE

PIN: 015286-000