NOT MEASUREMENT SENSITIVE

MIL-HDBK-1222B(TM)
31 JANUARY 2003

SUPERSEDING
MIL-HDBK-1222A
9 APRIL 1997

DEPARTMENT OF DEFENSE HANDBOOK

GUIDE TO THE GENERAL STYLE AND FORMAT OF U.S. ARMY WORK PACKAGE TECHNICAL MANUALS

This handbook is for guidance only.
Do not cite this document as a requirement

AMSC N/A **AREA TMSS**

DISTRIBUTION STATEMENT A. Approved for public release, distribution is unlimited.

FOREWORD

1. This military handbook is approved for use by the Department of the Army and is available for use by all Departments and Agencies of the Department of Defense (DOD).

2. This handbook provides non-regulatory guidance for the preparation of technical manuals that are required to operate and maintain the various types of equipment and weapon systems within the Department of the Army. This handbook is for guidance only. This handbook cannot be cited as a requirement. If it is, the contractor does not have to comply.

3. This handbook expands and clarifies the requirements contained in MIL-STD-40051, Preparation of Digital Technical Information for Multi-Output Presentation of Technical Manuals, and provides recommended writing style, comprehensibility, format, and graphics requirements used by the U. S. Army for the preparation of technical manuals to the work package concept.

4. Beneficial comments (recommendations, additions, deletions) and any pertinent data which may be of use in improving this document should be addressed to: Executive Director, USAMC Logistics Support Activity, ATTN: AMXLS-AP, Redstone Arsenal, AL 35898-7466, by using the Standardization Document Improvement Proposal (DD Form 1426) appearing at the end of this handbook or by letter

CONTENTS

PARAGRAPH PAGE

FOREWORD ..... **ii**

1. SCOPE **1**
1.1 Scope 1
1.2 Applicability 1

2. APPLICABLE DOCUMENTS **1**
2.1 General 1
2.2 Government documents 1
2.2.1 Specifications, standards, and handbooks 1
2.2.2 Other Government documents and publications 2
2.3 Non-Government publications 3
2.4 Order of Precedence 5

3. DEFINITIONS **5**

4. PAGED-BASED TECHNICAL MANUAL DEVELOPMENT **18**
4.1 General 18
4.2 Comprehensibility 19
4.3 Reading Grade Level (RGL) and target audience description 19
4.4 RGL measurements 19
4.5 Nomenclature 19
4.5.1 Nomenclature consistency and applicability 19
4.5.2 Official/approved nomenclature 19
4.5.3 Neutral terms 19
4.5.4 Military terms 19
4.5.5 Automatic electronic test and checkout terminology 19
4.6 Standard English grammar 19
4.7 Narrative, nonprocedural text 19
4.8 Procedural text 20
4.8.1 Lead-in 20
4.8.2 Form and content of procedures 20
4.8.3 Limitations for procedural text 20
4.8.4 Sentences in procedures 20
4.8.5 Positive form 20
4.9 Selective application and tailoring 20
4.10 Style and format for printed page-based TMs 20
4.11 Obtaining the DTDs, and style sheets 20
4.12 Figures contained in this handbook 21
4.13 Copyrights, proprietary names, and advertising 21
4.13.1 Copyright/copyright credit line 21
4.13.2 Proprietary names 21
4.13.3 Advertising 21
4.14 Development of work package technical manuals 21

CONTENTS

PARAGRAPH		PAGE
4.14.1	Types of work packages	21
4.14.1.1	Information oriented work package	21
4.14.1.2	Task oriented work package	21
4.14.2	Technical manuals developed in accordance with MIL-STD-40051	21
4.14.3	Front and rear matter for page-based TMs	22
4.14.3.1	Front matter	22
4.14.3.2	Rear matter	22
4.14.4	General information, equipment description and theory of operation chapter	22
4.14.5	Operator instructions chapter	22
4.14.6	Troubleshooting procedures chapter	23
4.14.7	Maintenance instructions chapter	23
4.14.8	Repair parts and special tools lists	24
4.14.9	Supporting information chapter	24
4.15	How to develop a work package TM	25
4.15.1	How to develop work packages	25
4.15.1.1	Development of individual work packages	25
4.15.2	Creating an outline for a TM	26
4.15.2.1	Front Matter	26
4.15.2.3	Rear Matter	28
4.15.3	Development of a XML source file	28
4.15.3.1	Work package identification numbers	29
4.15.3.2	Printing the TM	29
4.15.3.2.1	Printing the TM using a style sheet	29
4.15.3.2.2	Printing the TM using XSL style sheets	29
4.16	Format	29
4.16.1	Major divisions	29
4.16.2	Work packages	29
4.16.3	Paragraphs	29
4.16.4	Procedural steps	30
4.16.4.1	Procedural step levels	31
4.16.5	Tables and lists	31
4.16.5.1	Table locations	31
4.16.5.2	Table numbering	32
4.16.5.3	Table titles	32
4.16.5.4	Table format	32
4.16.5.4.1	Table readability and use	32
4.16.5.5	Footnotes to tables	33
4.16.5.6	Lists	33
4.16.6	Figures/illustrations	33
4.16.6.1	Figure numbering	33
4.16.6.2	Figure number and title placement	34
4.16.6.3	RPSTL figure numbering	34
4.16.6.4	Figure titles	34
4.16.6.5	Legends	34

CONTENTS

PARAGRAPH PAGE
4.16.7 Warnings, cautions, and notes ... 34
4.16.7.1 Format for warnings, cautions, and notes ... 34
4.16.8 Hazardous materials warnings with icons ... 35
4.16.8.1 Format for hazardous materials warnings with icons ... 35
4.16.8.2 Development of icons ... 35
4.16.9 Page sizes ... 36
4.16.10 Type sizes and styles ... 36
4.16.11 Placement of text and illustrations ... 41
4.16.11.1 Text formatting requirements ... 41
4.16.11.2 Placement of text and related illustrations ... 42
4.16.11.2.1 Placement of text and related illustrations for pocket TMs ... 42
4.16.11.3 Text wrapping ... 42
4.16.11.4 Illustration placement options ... 42
4.16.11.5 Multiple tasks using same illustrations ... 42
4.16.11.6 Repeating illustrations ... 42
4.17 Style ... 42
4.17.1 Abbreviations and acronyms ... 42
4.17.2 Equations ... 43
4.17.2.1 Symbols ... 43
4.17.2.2 Punctuation ... 44
4.17.2.3 Dividing an equation ... 44
4.17.2.4 Alignment of equations ... 45
4.17.2.5 Connecting words ... 45
4.17.2.6 Spacing ... 45
4.17.2.7 Numbering and referencing to equations ... 46

5. FRAME-BASED TECHNICAL MANUAL DEVELOPMENT ... 46
5.1 General ... 46
5.2 Selective application and tailoring ... 46
5.3 Style and format for display of frame-based TMs ... 46
5.4 Figures contained in this handbook ... 46
5.5 Copyrights, proprietary names, and advertising ... 46
5.5.1 Copyright/copyright credit line ... 46
5.5.2 Proprietary names ... 47
5.5.3 Advertising ... 47
5.6 Development of work package technical manuals ... 47
5.6.1 Technical Manual Outline ... 47
5.6.1.1 Initial outline development ... 47
5.6.1.2 Outline content and arrangement ... 47
5.7 Development of a XML source file ... 48
5.8 Displaying the TM using a style sheet ... 48
5.9 IETM divisions ... 48
5.9.1 Introductory matter and planning information ... 48
5.9.1.1 IETM installation data ... 49
5.9.1.2 CD content frame ... 49

CONTENTS

PARAGRAPH		PAGE
5.9.1.3	Revision summary frame	49
5.9.1.4	Identification information (title frame)	49
5.9.1.5	List of IETM contents	49
5.9.1.6	"How To Use This IETM" information	49
5.9.2	Description and theory of operation	49
5.9.3	Operator instructions	49
5.9.4	Troubleshooting procedures	50
5.9.5	Maintenance instructions	50
5.9.6	Parts information/repair parts and special tools lists	51
5.9.6.1	Parts information in work packages	51
5.9.6.1.1	Part data useful in Frame-based IETM	51
5.9.7	Supporting information	52
5.9.8	Work package content	52
5.9.9	Development of individual work packages	52
5.10	Format	53
5.10.1	Font size and style	53
5.10.2	Use of alerts	53
5.10.3	Warnings, cautions, and notes	53
5.10.3.1	Use and placement	53
5.10.3.1.1	Display requirements for warnings, cautions, and notes	54
5.10.3.2	Hazardous material warnings	54
5.10.4	Work packages	54
5.10.4.1	Work package initial setup information	54
5.10.4.2	Work package identification number	54
5.10.4.3	Maintenance tasks and descriptive information	54
5.10.5	Paragraphs	55
5.10.5.1	Paragraph numbering	55
5.10.5.2	Paragraph titles	55
5.10.6	Procedural steps	55
5.10.6.1	Procedural step numbering	55
5.10.6.2	Procedural step titles	55
5.10.7	Tables and lists	55
5.10.7.1	Table locations	55
5.10.7.2	Table numbering	55
5.10.7.3	Table titles	55
5.10.7.4	Table format	55
5.10.7.5	Footnotes to tables	55
5.10.7.6	Lists	55
5.10.8	Display of text	55
5.10.9	Display of illustrations	56
5.10.10	Title bar	56
5.11	Style	56
5.11.1	Abbreviations and acronyms	56
5.11.2	Symbols	56
5.11.2.1	General information for symbols	56

CONTENTS

PARAGRAPH PAGE
5.11.2.2 Metric symbols ... 56
5.11.3 Nuclear hardness (hardness-critical processes) marking ... 56
5.11.4 Electrostatic Discharge (ESD) sensitive marking ... 56
5.11.5 Quality Assurance (QA) symbol ... 56
5.11.6 Security classification, emergency page and protective markings ... 56
5.11.7 Referencing ... 57
5.11.7.1 Other documents ... 57
5.11.7.2 Government specifications and standards ... 57
5.11.7.3 Within the IETM ... 57
5.11.7.4 Equipment, components, and parts ... 57
5.11.7.5 National Stock Numbers (NSNs) and Part Numbers (P/Ns) ... 57
5.11.7.6 Equipment panel markings (placarding) ... 57
5.11.7.7 Metric and U.S. standard measurements ... 57
5.11.7.8 Temperature ... 57
5.11.7.9 Other TMs/IETMs ... 57
5.11.7.10 Tables ... 57
5.11.7.11 Figures ... 58
5.11.7.12 Index numbers ... 58
5.11.7.13 Items on diagrams ... 58
5.11.8 Equations ... 58
5.11.9 Nomenclature ... 58
5.11.9.1 Nomenclature consistency and applicability ... 58
5.11.9.2 Official/approved nomenclature ... 58
5.11.9.3 Military terms ... 58
5.11.9.4 Automatic electronic test and checkout terminology ... 58
5.11.10 Multimedia presentation ... 58

6. GRAPHICS REQUIREMENTS ... 58
6.1 Illustration preparation ... 58
6.1.1 Illustration style and format preparation ... 58
6.1.2 Illustration detail and size ... 58
6.1.2.1 Illustration detail ... 58
6.1.2.2 Scale ... 59
6.1.2.3 Graphic size options ... 59
6.1.2.4 Letter size ... 59
6.1.2.5 Electrostatic discharge (ESD) sensitive acronym ... 59
6.2 Types of graphics ... 59

7. CHANGES/REVISIONS ... 59
7.1 Changes/revisions for page-based TMs ... 59
7.1.1 Changes ... 59
7.1.1.1 Change format ... 60
7.1.1.2 Changed work packages ... 60
7.1.1.3 Additional WPs for a change ... 60
7.1.1.4 Changed front and rear matter pages ... 60

CONTENTS

PARAGRAPH PAGE
7.1.1.5 Change symbols 60
7.1.2 Complete revisions 60
7.1.2.1 Supersedure notice 60
7.2 Revisions for frame-based TMs 61
7.3 Revision symbols 61
7.3.1 Revision symbols for illustrations 61

8. SECURITY CLASSIFICATION AND HANDLING RESTRICTIVE MARKINGS... 62
8.1 General 62
8.2 Overall classification 62
8.3 Classification of table of contents 62
8.4 Classification of chapter 62
8.5 Classification of work packages 62
8.6 Classification of pages 63
8.7 Paragraph and table markings 63
8.8 Illustration markings 63
8.9 Downgrading/Declassification 63
8.9.1 Downgrading/declassification notice 63
8.9.2 Downgrading procedures 63
8.10 Reprinting classified publications 64

9. NOTES 64
9.1 Intended use 64
9.2 Subject term (key word) listing 65

APPENDIX A GUIDELINES FOR THE PREPARATION OF INTERACTIVE ELECTRONIC TECHNICAL MANUALS INFORMATION FOR CD-ROM FACE, FLYLEAF, JEWEL CASE, AND MAILER 158

A.1 SCOPE 158
A.1.1 Scope 158
A.1.2 Philosophy 158

A.2 APPLICABLE DOCUMENTS 158

A.3 DEFINITIONS 158

A.4 GENERAL REQUIREMENTS 158

A.5 DETAILED REQUIREMENTS 158
A.5.1 CD label data 158
A.5.1.1 TM number 159
A.5.1.2 CD set number 159
A.5.1.3 EM number, IDN, and PIN 159
A.5.1.4 Supersession data 159
A.5.1.5 Copyright Notice, Distribution Restriction, and Arms Export Control Notice 159

CONTENTS

PARAGRAPH PAGE
A.5.1.6 Protective markings 160
A.5.1.7 Information not contained on CD-ROM face 160
A.5.2 CD Mailer/Flyleaf data 160
A.5.2.1 Outside panel of CD mailer (front) 160
A.5.2.2 Outside panel of mailer (back) 160
A.5.2.3 Outside of mailer (spine) 160
A.5.2.4 Inside of mailer (left panel) 160
A.5.2.5 Inside of mailer (right panel) 161
A.5.3 Flyleafs 161

APPENDIX B EXAMPLES OF TYPES OF GRAPHICS USED IN WORK PACKAGE TECHNICAL MANUALS 167

B.1 SCOPE 167
B.1.1 Scope 167

B.2 APPLICABLE DOCUMENTS 167

B.3 DEFINITIONS 167

B.4 GENERAL REQUIREMENTS 167
B.4.1 Elements of illustrations 167
B.4.1.1 Border rules and boxes 167
B.4.1.2 Use of the human figure 167
B.4.1.3 Credit lines 168
B.4.1.4 Callouts 168
B.4.1.4.1 Index numbers 168
B.4.1.5 RPSTL figures 169
B.4.1.6 Nomenclature (Page-based) 169
B.4.1.7 Leader lines and arrowheads 169
B.4.1.8 Illustration legends 169
B.4.1.9 Color in illustrations 169
B.4.1.9.1 Page-based TMs 169
B.4.1.9.2 Frame-based TMs 170
B.4.1.10 Identification numbers 170

B.5 DETAILED REQUIREMENTS 170
B.5.1 Types of graphics 170
B.5.2 Illustrations for procedures 170
B.5.3 Tool and test equipment illustrations 171
B.5.4 Illustrations of special tools and test equipment 171
B.5.5 Line drawings 171
B.5.6 Photographs 171
B.5.6.1 Page-based TMs 171
B.5.6.2 Frame-based TMs 171
B.5.7 Engineering drawings 171

CONTENTS

PARAGRAPH		PAGE
B.5.8	Multisection illustrations (Page-based TMs only)	172
B.5.9	Multiview illustrations	172
B.5.10	Foldout and multisheet illustrations (Page-based TMs only)	172
B.5.10.1	Multisheet RPSTL illustrations	172
B.5.11	Exploded views	172
B.5.12	Locator views	173
B.5.13	Detail views	173
B.5.14	Scanned images	173
B.5.15	Cartoons	173
B.5.16	Diagrams	173
B.5.16.1	Specification requirements	174
B.5.16.1.1	Designations, diagrams, and symbols	174
B.5.16.1.2	General methods	174
B.5.16.2	Portraying signal flow	175
B.5.16.2.1	Signal connections	175
B.5.16.2.1.1	Techniques within a single sheet of a diagram	176
B.5.16.2.1.2	Techniques between sheets of a diagram	176
B.5.16.2.1.3	Techniques between diagrams	177
B.5.16.2.2	Signal difference	177
B.5.16.2.3	Signal junctions	177
B.5.16.3	Schematic and functional diagrams	177
B.5.16.3.1	Schematic diagrams	177
B.5.16.3.2	Functional diagrams	177
B.5.16.3.3	Test point identification symbols	178
B.5.16.4	Pictorial diagrams	178
B.5.16.5	Cutaway diagrams	178
B.5.16.6	Logic diagrams	178
B.5.16.7	Simplified diagrams	179
B.5.16.8	Partial diagrams	179
B.5.16.9	Test diagrams	179
B.5.16.10	Power distribution diagrams	179
B.5.16.11	Pyramid diagrams	179
B.5.16.12	Wiring and interconnection data	179
B.5.16.12.1	Cable diagrams	180
B.5.16.12.2	Wiring diagrams	180
B.5.16.12.3	Wire list	181
B.5.16.13	Piping diagrams	181
B.5.16.14	Electronic items	181
B.5.16.15	Charts and graphs as illustrations	182
B.5.16.15.1	Line graphs	182
B.5.17	Requirements for final reproducible copy (Page-based TMs only)	182
B.5.17.1	Line drawings, prescreened photographs, digitized artwork, and combination illustrations	182
B.5.17.1.1	Line drawings	182
B.5.17.1.2	Prescreened photographs	182

CONTENTS

PARAGRAPH PAGE
B.5.17.1.3 Digitized artwork....182
B.5.17.1.4 Combination illustrations....182

APPENDIX C GUIDANCE FOR PREPARATION OF A LIST OF EFFECTIVE PAGES....221

C.1 SCOPE....221
C.1.1 Scope....221

C.2 APPLICABLE DOCUMENTS....221

C.3 DEFINITIONS....221

C.4 GENERAL REQUIREMENTS....221

C.5 DETAILED REQUIREMENTS....221
C.5.1 Types of publications....221
C.5.1.1 Exempted publications....222
C.5.2 Types of pages to be included....222
C.5.2.1 Exempted pages....222
C.5.3 Change numbers....222
C.5.4 Listing the pages....222
C.5.5 Numbering the list of effective pages....222
C.5.6 List of Effective Pages for RPSTLS....223
C.5.7 Multi-service manuals....223
C.5.8 Multi-volume manuals....223
C.5.9 Dates of Issue for changes....223

APPENDIX D SAMPLING PLAN FOR INSPECTION OF TECHNICAL MANUALS AND READING GRADE LEVEL MEASURES....230

D.1 SCOPE....230
D.1.1 Scope....230

D.2 APPLICABLE DOCUMENTS....230

D.3 DEFINITIONS....230

D.4 GENERAL REQUIREMENTS....230

D.5 DETAILED REQUIREMENTS....230
D.5.1 Sampling plan for inspection....230
D.5.1.1 Derivation of samples....230
D.5.1.1.1 Critical scanning....230
D.5.1.1.2 Systematic sampling....230
D.5.1.2 Applicable tests....231

CONTENTS

PARAGRAPH		PAGE
D.5.1.3	Extended local samples	231
D.5.1.4	Validation of readability	231
D.5.1.5	Critical scanning	231
D.5.1.5.1	Scanning criteria for procedures	231
D.5.1.5.2	Scanning criteria for nonprocedural text	231
D.5.1.5.3	Scanning criteria for illustrations and tables	231
D.5.1.6	Systematic sampling	232
D.5.1.6.1	Identifying break pages	232
D.5.1.6.2	Samples of procedural text	233
D.5.1.6.3	Samples of nonprocedural text	233
D.5.1.6.3.1	Calculation of RGL	233
D.5.1.6.3.2	Other tests on nonprocedural text	233
D.5.1.6.4	Samples of illustrations and tables	233
D.5.1.6.4.1	Sampling method for illustrations	233
D.5.1.6.4.2	Tables	233
D.5.1.7	Extended local samples	233
D.5.1.7.1	Procedural text	233
D.5.1.7.2	Nonprocedural text	233
D.5.1.7.2.1	Samples for RGL calculation	233
D.5.1.7.2.2	Other tests on nonprocedural text	233
D.5.1.7.3	Illustrations and tables	233
D.5.1.8	Special cases of sampling	234
D.5.1.8.1	Short TMs	234
D.5.1.8.2	Material already sampled	234
D.5.1.8.3	Availability of material	234
D.5.2	Reading grade level measures	234
D.5.2.1	Counts for narrative text	234
D.5.2.1.1	Words	234
D.5.2.1.2	Sentences	234
D.5.2.1.3	Syllables	234
D.5.2.2	Automatic counting equipment	234
D.5.2.3	Calculation of RGL	234
D.5.2.3.1	Overall grade level	234
D.5.2.3.2	Sample grade levels.	235
D.5.2.4	Manual counting technique	236

CONTENTS

FIGURE PAGE
FIGURE 1. Example of a general information work package. 66
FIGURE 2. Example of an equipment description and data work package. 70
FIGURE 3. Example of a system theory of operation work package. 73
FIGURE 4. Example of an operator's controls and indicators work package. 75
FIGURE 5. Example of an operation under usual conditions work package. 76
FIGURE 6. Example of a troubleshooting malfunction/symptom index. 78
FIGURE 7. Example of a troubleshooting work package initial setup and procedure. 79
FIGURE 8. Examples of tabular troubleshooting procedures. 80
FIGURE 9. Example of a functional flow logic tree troubleshooting procedure. 81
FIGURE 10. Example of a troubleshooting based on multiplex read codes. 82
FIGURE 11. Example of a text-logic troubleshooting procedure. 83
FIGURE 12. Example of packaging inspection/service upon receipt. 84
FIGURE 13. Example of PMCS introduction. 86
FIGURE 14. Example of PMCS table. 88
FIGURE 15. Example of PMCS table format with crew member grouping. 90
FIGURE 16. Example of a maintenance work package. 91
FIGURE 17. Example of phased maintenance services. 93
FIGURE 18. Example of preventive maintenance services. 94
FIGURE 19. Example of manhour/day interval inspection checklist. 95
FIGURE 20. Example of periodic inspections based on flight hours. 96
FIGURE 21. Example of manhour/day interval inspection checklist with associated figure. 97
FIGURE 22. Example of an ammunition marking information work package. 99
FIGURE 23. Example of a system theory of operation work package. 101
FIGURE 24. Example of a facilities work package 103
FIGURE 25. Partial sample of a filled-out content selection matrix 104
FIGURE 26. Example of an XML source file. 107
FIGURE 27. Example footnotes for tables. 111
FIGURE 28. Example of tabular information and lists. 112
FIGURE 29. Example of a foldout page. 114
FIGURE 30. Example of a figure rotated 90 degrees. 115
FIGURE 31. Example of placement of warning icons in a procedure 116
FIGURE 32. Example of warning icons in a warning summary. 118
FIGURE 33. Example of incorrect (wrapped text) and correct text placement with an illustration. 120
FIGURE 35. Example of equations. 122
FIGURE 36. Example of numbering equations. 124
FIGURE 37. Example of a CD content frame. 125
FIGURE 38. Examples of assembly of introductory frames. 126
FIGURE 39. Example of a revision summary frame. 127
FIGURE 40. Example of identification information (title frame). 128
FIGURE 41. Example of identification information for DMWR with National Overhaul standards. 129
FIGURE 42. Example of identification information for a NMWR. 130
FIGURE 43. Example of an IETM contents frame. 131
FIGURE 44. Example of descriptive information. 132

CONTENTS

FIGURE PAGE
FIGURE 45. Example of a troubleshooting procedure. 133
FIGURE 46. Example of a maintenance procedure. 139
FIGURE 47. Example of parts information. 141
FIGURE 48. Example of alerts. 142
FIGURE 49. Example of a work package initial setup. 143
FIGURE 50. Example of size options allowed for graphics. 144
FIGURE 51. Example of change/revision symbols on illustrations. 145
FIGURE 52. Example of security classification markings for cover. 146
FIGURE 53. Example of security classification markings for title block page. 147
FIGURE 54. Example of security classification markings for table of contents. 148
FIGURE 55. Example of security classification markings for chapter title page. 149
FIGURE 56. Example of security classification markings for work package. 150
FIGURE 57. Example of security classification markings for pages. 151
FIGURE 58. Example of security classification markings for paragraphs. 152
FIGURE 59. Example of security classification markings for tables. 153
FIGURE 60. Example of security classification markings for illustrations. 154
FIGURE 61. Example of downgrading notice on title block page. 156
FIGURE 62. Example of declassification notice on title block page. 157
FIGURE A-1. Example 1 of a CD label for first issue of an IETM. 162
FIGURE A-2. Example of a CD label for superseded IETM. 163
FIGURE A-3. Example of CD mailer outside front, spine, and back. 164
FIGURE A-4. Example of CD mailer, inside (left side panel). 165
FIGURE A-5. Example of CD mailer, inside (right side panel). 166
FIGURE B-1. Example of a multisheet illustration with border rules. 183
FIGURE B-2. Example of a locator illustration and detail view. 184
FIGURE B-3. Example of items in phantom, callouts, and illustration identification. 185
FIGURE B-4. Example of a pictorial diagram with nomenclature. 186
FIGURE B-5. Example of use of patterns instead of color. 188
FIGURE B-6. Example of a multiview illustration. 189
FIGURE B-7. Example of page size multisheet continuous flow diagram. 190
FIGURE B-8. Example of an exploded view illustration. 192
FIGURE B-9. Example of highway and point-to-point methods for signal flow. 193
FIGURE B-10. Example of oval connectors to continue signals. 194
FIGURE B-11. Example of signal returns and breakoff symbols to continue signals - single sheet diagram. 195
FIGURE B-12. Example of boat symbols, block technique, pyramid method to continue signals -multisheet diagram. 196
FIGURE B-13. Example of signal difference techniques. 197
FIGURE B-14. Example of subordinate and coordinate junctions. 198
FIGURE B-15. Example of hardware schematic diagram. 199
FIGURE B-16. Example of a functional schematic. 200
FIGURE B-17. Example of a functional block diagram. 201
FIGURE B-18. Example of a cutaway diagram. 202
FIGURE B-19. Example of a logic diagram. 204
FIGURE B-20. Example of a truth table. 205

CONTENTS

FIGURE PAGE
FIGURE B-21. Example of a timing diagram. 206
FIGURE B-22. Example of a simplified diagram. 207
FIGURE B-23. Example of a partial diagram. 208
FIGURE B-24. Example of a test diagram. 209
FIGURE B-25. Example of a test setup diagram 210
FIGURE B-26. Example of a Power Distribution Diagram. 211
FIGURE B-27. Example of a pyramid diagram. 212
FIGURE B-28. Example of a cable diagram illustration with table. 213
FIGURE B-29. Example of a cable interconnect diagram. 214
FIGURE B-30. Example of a wiring diagram. 215
FIGURE B-31. Example of a wire list. 217
FIGURE B-32. Example of a piping diagram. 218
FIGURE B-33. Example of an electronic component card illustration. 219
FIGURE B-34. Example of an electronic equipment RPSTL illustration. 220
FIGURE C-1. Example of a list of effective pages for a new publication. 224
FIGURE C-2. Example of a list of effective pages for a manual with changes. 225
FIGURE C-3. Example of a list of effective pages for a revised manual. 226
FIGURE C-4. Example of a list of effective pages for a RPSTL in WP format 227
FIGURE C-5. Example of a list of effective pages for a RPSTL with a CCSS Dump. 228
FIGURE C-6. Example of a list of effective pages for a multi-volume manual. 229

TABLE PAGE
TABLE I. TM page sizes (in inches). 36
TABLE II. Foldout page sizes (in inches). 36
TABLE III. Style, capitalization, leading, and spacing. 39
TABLE IV. Specifications Requirements for Graphics. 174

1. SCOPE.

1.1 Scope. This handbook provides non-regulatory guidance and information for the preparation of technical manuals (TM) required to operate and maintain the various types of equipment and weapon systems within the Department of the Army. Section 4 provides technical manual development guidance for the preparation of page-based TMs. Section 5 provides technical manual development guidance for the preparation of frame-based TMs. Appendix A provides examples of the types of graphics used to support information oriented and task type work packages in both page-based and frame-based TMs. This handbook provides guidance only. It cannot be cited as a requirement. If it is, the contractor does not have to comply. Any guidance contained herein which is applicable to depot maintenance or Depot Maintenance Work Requirements (DMWR) is also applicable to National Maintenance Work Requirements (NMWR).

1.2 Applicability. This handbook is applicable for use by the Department of the Army and supporting contractors.

2. APPLICABLE DOCUMENTS.

2.1 General. The documents listed below are not necessarily all of the documents referenced herein, but are the ones that are needed in order to fully understand the information provided by this handbook.

2.2 Government documents.

2.2.1 Specifications, standards, and handbooks. The following specifications, standards, and handbooks form a part of this document to the extent specified herein. Unless otherwise specified, the issues of these documents are those listed in the latest issue of the Department of Defense Index of Specifications and Standards (DODISS) and supplemented thereto, and are referenced for guidance only.

SPECIFICATIONS

DEPARTMENT OF DEFENSE

MIL-PRF-28000	—	Digital Representation for Communication of Product Data: IGES Application Subsets and IGES Application Protocols
MIL-PRF-28001	—	Markup Requirements and Generic Style Specification for Electronic Printed Output and Exchange of Text
MIL-PRF-28002	—	Raster Graphics Representation in Binary Format, Requirements for
MIL-PRF-28003	—	Digital Representation for Communication of Illustration Data: CGM Application Profile

MIL-PRF-87268	—	Manuals, Interactive Electronic Technical - General Content, Style, Format, and User-Interaction Requirements

STANDARDS

DEPARTMENT OF DEFENSE

MIL-STD-17	—	Mechanical Symbols
MIL-STD-1309	—	Definition of Terms for Testing, Measurement, and Diagnostics
MIL-STD-1686	—	Electrostatic Discharge Control Program for Protection of Electrical and Electronic Parts, Assemblies, and Equipment (Excluding Electrically Initiated Explosive Devices) (Metric)
MIL-STD-2361	—	Digital Publications Development
MIL-STD-40051	—	Preparation of Digital Technical Information for Multi-Output Presentation of Technical Manuals

HANDBOOKS

DEPARTMENT OF DEFENSE

MIL-HDBK-863	—	Wiring Data and System Schematic Diagrams Preparation of
MIL-HDBK-9660	—	Handbook for DoD-Produced CD-ROM Products

(Unless otherwise indicated, copies of the above specifications, standards, and handbooks are available from Standardization Documents Order Desk, 700 Robbins Avenue, Building 4D, Philadelphia, PA 19111-5094.)

H4/H8	—	Cataloging Handbook: Commercial and Government Entity Code (United States and Canada) - Name to Code.

(Copies of Handbooks H4/H8 are available from the Commander, Defense Logistics Services Center, Battle Creek, MI 49017-3084.)

2.2.2 Other Government documents and publications. The following other Government documents and publications form a part of this handbook to the extent specified herein.

AR 25-30	—	Army Publishing Program
DA PAM 738-750	—	Functional Users Manual for The Army Maintenance Management System (TAMMS)

DA PAM 738-751	—	Functional Users Manual for The Army Maintenance Management System-Aviation (TAMMS-A)
EO12196	—	Occupational, Safety and Health Programs for Federal Employees.
EO12958	—	Classified National Security Information

(Application for copies should be addressed to U.S. Army Publications Distribution Center, 1655 Woodson Road, St. Louis, MO 63114-6181.)

DOD 5200.1-R	—	Information Security Program
Joint Pub 1-02	—	DOD Dictionary of Military and Associated Terms

(Copies of DOD 5200.1-R and Joint Pub 1-02 are available from the National Technical Information Service. U.S. Department of Commerce, 5285 Port Royal Road, Springfield, VA 22161.)

DOD 5220.22-M	—	National Industrial Security Program for Operating Manual
Library of Congress Catalog No. Z253.U58	—	U.S. Government Printing Office (GPO) Style Manual

(Copies of the DOD 5220.22-M and GPO Style Guide are available from the U.S. Government Printing Office, ATTN: Superintendent of Documents, Washington, DC 20402-0001.)

2.3 Non-Government publications. The following documents form a part of this document to the extent specified therein. Unless otherwise specified, the issues of the documents that are DOD adopted are those listed in the latest issue of the DODISS, and supplement thereto.

AMERICAN NATIONAL STANDARDS INSTITUTE (ANSI)

ANSI Y14.15-1966 (R1973)	—	Electrical and Electronic Diagrams.
ANSI Y32.10	—	Diagrams, Fluid Power, Graphic Symbols for.
ISO 8879	—	Information Processing - Text and Office Systems - Standard Generalized Markup Language (SGML)

(Copies of the documents listed above are available from the American National Standards Institute Inc., 1430 Broadway, New York, NY 10018-3308.)

AMERICAN SOCIETY OF MECHANICAL ENGINEERS

ASME Y14.24	—	Types and Applications of Engineering Drawings
ASME Y14.34M	—	Associated Lists
ASME Y14.35M	—	Revision of Engineering Drawings and Associated Documented
ASME Y14.38	—	Abbreviations and Acronyms
ASME Y14.100	—	Engineering Drawing

(Copies of this document are available from the American Society of Mechanical Engineers, 3 Park Avenue, New York, NY 10016-5990)

INSTITUTE OF ELECTRICAL AND ELECTRONICS ENGINEERS (IEEE)

IEEE 91-1984	—	Graphic Symbols for Logic Functions
IEEE 200-1975	—	Electrical and Electronics Parts and Equipment Reference Designators
IEEE 260-1978	—	IEEE Standard Letter Symbols for Units of Measurement
IEEE 280-1985	—	Electrical Science and Electrical Engineering, IEEE Standard Letter Symbols for Quantities Used in
IEEE 315A-1986	—	Graphic Symbols for Electrical and Electronic Diagrams
IEEE 945-1984	—	Electrical and Electronics, Science and Technology. IEEE Recommended Practice for Preferred Metric Units for Use in

(Copies of the documents listed above are available from the Institute of Electrical and Electronics Engineers, Inc., 345 East 47th Street, New York, NY 10017 or from the Standardization Documents Order Desk, 700 Robbins Avenue, Building 4D, Philadelphia, PA 19111-5094.)

WORLD WIDE WEB CONSORTIUM (W3C)

REC–xml–20001006	—	Extensible Markup Language (XML) 1.0 (Second Edition)
REC–xslt–19991116	—	XSL Transformations (XSLT) Version 1.0.

(Copies of these publications are available from World Wide Web Consortium (W3C) should be obtained from the Internet address http://www.w3.org.)

2.4 Order of Precedence. In the event of a conflict between the text of this document and the references cited herein, the text of the referenced document takes precedence. Nothing in this document, however, supersedes applicable laws and regulations unless a specific exemption has been obtained.

3. DEFINITIONS.

3.1 Acronyms used in this handbook. The acronyms used in this handbook are defined as follows:

AAL	Additional Authorization List
APD	Army Publishing Directorate
ASCII	American Standard Code for Information Interchange
AMDF	Army Master Data File
AMSC	Acquisition Management System Control
ANSI	American National Standards Institute
AVIM	Aviation Intermediate Maintenance
AVUM	Aviation Unit Maintenance
BII	Basic Issue Items
BITE	Built-in Test Equipment
BOI	Basis of Issue
CAGE	Commercial and Government Entity Code
CALS	Continuous Acquisition and Life-cycle Support
CCSS	Commodity Command Standard System
CD-ROM	Compact Disk - Read Only Mode
CGM	Computer Graphics Metafile
COEI	Components of End Item
DFAR	Defense Federal Acquisition Regulation Supplement
DID	Data Item Description
DMWR	Depot Maintenance Work Requirement
DOD	Department of Defense
DODISS	Department of Defense Index of Specifications and Standards
DS	Direct Support
DTD	Document Type Definition
IETM	Interactive Electronic Technical Manual
EIC	End Item Code
EIR	Equipment Improvement Recommendation
EDS	Electronic Display System
ESD	Electrostatic Discharge
FAR	Federal Acquisition Regulation
FDEP	Final Draft Equipment Publication
FGC	Functional Group Code
FRC	Final Reproducible Copy
GL	Grade Level
GPO	Government Printing Office
GS	General Support
HCP	Hardness Critical Process
IEEE	Institute of Electrical and Electronics Engineers

IEC	International Electrotechnical Commission
IETM	Interactive Electronic Technical Manual
IGES	Initial Graphics Exchange Specification
IPR	In-Process Review
ISO	International Organization for Standardization
JPEG	Joint Photographers Experts Group
JTCI	Joint Technical Committee for Information
KHz	Kilohertz (1000 hertz)
LMI	Logistics Management Information
LRU	Line Replaceable Unit
LSA	Logistics Support Analysis
LSAR	Logistics Support Analysis Record
MAC	Maintenance Allocation Chart
MWO	Modification Work Order
MTOE	Modified Table of Organization and Equipment
NATO	North Atlantic Treaty Organization
NHA	Next Higher Assembly
NIIN	National Item Identification Number
NMWR	National Maintenance Work Requirement
NSA	National Security Agency
NSN	National Stock Number
OADR	Originating Agency's Determination Required
OGL	Overall Grade Level
OJCS	Organization of the Joint Chiefs of Staff
OPIM	Operating Instructions Information Module
OS	Output Specification
OSD	Office of the Secretary of Defense
OSHA	Occupational Safety and Health Act
PCB	Printed Circuit Board
PDF	Portable Document Format
PMAC	Preliminary Maintenance Allocation Chart
PMC	Preventive Maintenance Checklist
PMCS	Preventive Maintenance Checks and Services
PMS	Preventive Maintenance Services
PN	Part Number
PNG	Portable Network Graphics
QA	Quality Assurance
RAM	Reliability, Availability, and Maintainability
RGL	Reading Grade Level
RPSTL	Repair Parts and Special Tools List
SGML	Standard Generalized Markup Language
SMR	Source, Maintenance and Recoverability
SRA	Specialized Repair Activity
TOE	Table of Organization and Equipment
TM	Technical Manual
TMDE	Test, Measurement, and Diagnostic Equipment

TMQA	Technical Manual Quality Assurance
TMSS	Technical Manuals Specifications and Standards
TRAS	Army Training and Doctrine Command
WP	Work Package
WYSIWYG	What You See is What You Get
W3C	World Wide Web Consortium
XML	Extensible Markup Language
XSL	XML Style sheet Language

3.2 Definitions of selected terms.

3.2.1 Acquiring activity. The DOD component, activity, or organization of a using military service, or that organization delegated by a using service, that is responsible for the selection and determination of requirements for TMs.

3.2.2 Adjust. To maintain or regulate within prescribed limits, by bringing into proper position, or by setting the operating characteristics to specified parameters.

3.2.3 Align. To adjust specified variable elements of an item to bring about optimum or desired performance.

3.2.4 American National Standards Institute (ANSI). A private sector organization, which plans, develops, establishes or coordinates standards, specifications, handbooks or related documents.

3.2.5 Army Master Data File (AMDF). The files required to record, maintain, and distribute supply management data between and from Army commands to requiring activities.

3.2.6 Assembly. Two or more parts or subassemblies joined together to perform a specific function and capable of disassembly (e.g., brake assembly, fan assembly, audio frequency amplifier). Note the distinction between an assembly and subassembly is determined by the individual application. An assembly in one instance may be a subassembly in another where it forms a portion of an assembly.

3.2.7 Auxiliary equipment. Equipment, accessories, or devices which, when used with basic equipment, extend or increase its capability (e.g., Modified Table of Organization and Equipment (MTOE) items, etc.).

3.2.8 Aviation Intermediate Maintenance (AVIM). The next higher maintenance level after Unit. Aircraft maintenance at this level is the responsibility of, and is performed by, designated maintenance activities for direct support of the using organizations. Its phases normally consist of: calibration, repair, or replacement of damaged or unserviceable parts, components or assemblies; emergency manufacture of non-available parts; and technical assistance to using organizations.

3.2.9 Aviation Unit Maintenance (AVUM). Aircraft maintenance, which is the responsibility of, and is performed by, the using organization on its assigned equipment. Its phases normally consist of inspecting, servicing, lubricating, adjusting, and replacing parts, minor assemblies, and subassemblies.

3.2.10 Basic Issue Items (BII). Equipment essential for operation, and to do emergency repairs, but not listed on the drawings. These items may or may not be shipped separately packaged, but must be with the equipment when it is operated or transferred between property accounts.

3.2.11 Basis of Issue (BOI). The quantity of an item (special tool) authorized for the end item density spread or for the unit level specified.

3.2.12 Block diagram. A modified schematic diagram in that each group of maintenance-significant components that together performs one or more functions is represented by a single symbol or block. The block or symbol representing the group of components shows simplified relevant input and output signals pertinent to the subject diagram.

3.2.13 Built-in Test Equipment (BITE). Any identifiable device that is part of the supported end item and is used for testing that supported end item.

3.2.14 Calibrate. To determine and cause corrections or adjustments to be made to instruments or test, measuring, and diagnostic equipment used in precision measurement. Consists of comparisons of two instruments, one of which is a certified standard of known accuracy, to detect and adjust any discrepancy in the accuracy of the instrument being compared.

3.2.15 Callout. Anything placed on an illustration to aid in identifying the objects being illustrated, such as index numbers, nomenclature, leader lines, and arrows.

3.2.16 Change. A change is comprised of corrected pages/work packages to the basic manual (or previous edition). It consists of information that improves or clarifies the manual without requiring rewriting or reorganization of the technical content of the manual.

3.2.17 Continuous Acquisition Life-Cycle Support (CALS) raster. Compressed scanned raster images (CCITT, Group 4) in accordance with MIL-PRF-28002.

3.2.18 Caution. A statement or some other notification about an operating or maintenance procedure, practice, or condition that, if not strictly observed, could result in damage to, or destruction of, equipment or loss of mission effectiveness.

3.2.19 Commercial and Government Entity Code (CAGEC). A five character code assigned to commercial activities that manufacture or supply items used by the Federal Government and to Government activities that control design or are responsible for the development of certain specifications, standards, or drawings which control the design of Government items. CAGE Code assignments are listed in the H4/H8 CAGE Publications.

3.2.20 Commodity Command Standard System (CCSS). A system that standardizes the wholesale logistics operations performed by the major subordinate commands of the U.S. Army Materiel Command in the management of secondary items and repair parts.

3.2.21 Complete part number. Consists of the CAGEC and part number; used for requisition processing. The CAGEC is entered on a requisition form first, followed by the part number.

3.2.22 Complete repair. Maintenance capacity, capability, and authority to perform all the corrective maintenance tasks of the repair function in a use or user environment in order to restore serviceability to a failed item. Excludes the prescriptive maintenance functions, overhaul and rebuild.

3.2.23 Comprehensibility. The completeness with which a user in the target audience understands the information in the TM.

3.2.24 Continuous Acquisition Life-cycle Support (CALS). A DOD initiative to transition from paper-intensive, non-integrated weapon systems design, manufacturing, and support processes to a

highly automated and integrated mode of operation. This transition will be facilitated by acquiring, managing, and using technical data in standardized digital form.

3.2.25 Computer Graphics Metafile (CGM). A standard digital form for graphics preparation. Defined by MIL-PRF-28003.

3.2.26 Continuous tone photographs or drawings. Continuous tone photographs or drawings have a continuous gradation of tonal values ranging from light (white) to dark (black), including gray. These tonal values are not created by lines or dots.

3.2.27 Copy freeze date. A date set by the contracting activity after which no additions, deletions, or changes will be accepted to the publication material.

3.2.28 "Current as of" date. Indicates the date that all data in the Repair Parts and Special Tools List (RPSTL) were verified as being current prior to forwarding for printing.

3.2.29 Data Item Description (DID). A form used to define and describe the data required to be furnished by the contractor. Completed forms are provided to contractors in support of, and for identification of, each data item listed on the Contract Data Requirements List.

3.2.30 Department of Defense (DOD). The Office of the Secretary of Defense (OSD) (including all boards and councils), the Military Departments (Army, Navy, and Air Force), the Organization of the Joint Chiefs of Staff (OJCS), the Unified and Specified Commands, the National Security Agency (NSA), and the Defense Agencies.

3.2.31 Department of Defense Index of Specifications and Standards (DODISS). The DOD publication that lists unclassified Federal and military specifications and standards, related standardization documents, and voluntary standards approved for use by DOD.

3.2.32 Depot-level maintenance. Maintenance that is beyond the capability of the unit, direct support, and general support activities. Depot-level maintenance normally consists of overhaul, recondition, manufacture, repair, or modification and requires technical assistance beyond lower maintenance level capability.

3.2.33 Depot Maintenance Work Requirement (DMWR). A maintenance serviceability document for depot maintenance operations. The document prescribes the essential factors to ensure that an acceptable and cost-effective product is obtained. The following are some of the essential factors.

a. Scope of work to be performed by depot level maintenance facilities on an item, including organic or contract support.

b. Types and kinds of materiel to be used.

c. Quality of workmanship.

d. Repair methods, procedures, and techniques.

e. Modification requirements.

f. Fits and tolerances.

g. Equipment performance parameters to be achieved.

h. Quality assurance discipline.

3.2.34 Digital graphics forms. A standard graphics form acceptable for graphics preparation in accordance with graphic standards listed in MIL-STD-40051. These forms include CGM, CALS

raster, and Initial Graphics Exchange Specification (IGES), Joint Photographers Experts Group (JPEG) and Portable Network Graphics (PNG).

3.2.35 Direct Support (DS) maintenance. Maintenance accomplished on a component, accessory, assembly, subassembly, plug-in unit, or other portion either on the system or after it is removed. The replace function for this level of maintenance is indicated by the letter "F" appearing in the third position of the Source, Maintenance, Recoverability (SMR) code. An "F" appearing in the fourth position of the SMR code indicates complete repair is possible at the direct support maintenance level.

3.2.36 Disassemble. The step-by-step taking apart (or breakdown) of a spare or functional group-coded item to the level of its least componency identified as maintenance-significant (i.e., assigned an SMR code for the category of maintenance under consideration).

3.2.37 Document instance. The instance is the actual document text and its accompanying XML tags conforming to the specifications and restrictions set forth in the DTD.

3.2.38 Document Type Definition (DTD). The definition of the markup rules for a given class of documents. A DTD or reference to one should be contained in any XML conforming document.

3.2.39 Equipment Improvement Recommendation (EIR). Solicitation of suggestions from end item users/operators for means to improve the operation and effectiveness of equipment. SF 368 is the instrument by which suggested improvements are forwarded to the cognizant agency.

3.2.40 Expendable items. Items, other than repair parts, that are consumed in use (e.g., paint, lubricants, wiping rags, tape, cleaning compounds, sandpaper).

3.2.41 Extensible Markup Language (XML). A subset of SGML. It enables generic SGML to be served, received, and processed on the Web in the way that is now possible with HTML. XML has been designed for ease of implementation and for interoperability with both SGML and HTML.

3.2.42 Final Reproducible Copy (FRC). The final document ready for reproduction and publication as an authenticated TM, including all necessary changes made as a result of validation/verification and acquisition activity conditions of acceptance or approval. The delivery media includes, but is not limited to, reproducible camera-ready copy, negatives, disks, tapes, etc., as specified. For Army, FRC equates to Final Draft Equipment Publication (FDEP).

3.2.43 Flyleaf. The paper insert for a jewel case for a CD, which provides information about the CD.

3.2.44 Footer. One or more lines of standard text that appear at the bottom of each page (also called feet and running feet).

3.2.45 Frame-based technical manual. The format and style of the presented information are optimized for window presentation to assure maximum comprehension. The presentation format is "frame-oriented" and not "page oriented".

3.2.46 Functional diagram. A type of illustration in which symbols are connected by lines to show relationships among the symbols. The symbols may be rectangles or other shapes, standard electronic symbols representing components or functions, or pictorials representing equipment or components. Where appropriate, voltage readings are shown. The lines may represent procedures or processes, such as signal or logic flow, and physical items, such as wires. Functional diagram includes schematics, wiring and piping diagrams, logic diagrams, flow charts, and block diagrams.

3.2.47 Functional Group Code (FGC). A basic (usually two-position) group code assigned to identify major components, assemblies, and subassemblies to a functional system. Subordinate subfunctional groups/subassemblies are coded to relate back to the basic (top position) FGC in a sequential, Next Higher Assembly (NHA) relationship (i.e., top-down breakdown structure).

3.2.48 General Support (GS) maintenance. Maintenance accomplished on a component, accessory, assembly, subassembly, plug-in unit, or other portion either on the system or after it is removed. The replace function for this level of maintenance is indicated by the letter "H" appearing in the third position of the SMR code. An "H" appearing in the fourth position of the SMR code indicates complete repair is possible at the general support maintenance level.

3.2.49 Grade Level (GL). Level of reading comprehensibility to which a document is written. The required reading grade level of a document is specified by the contracting activity. For example, a level of about ninth grade may be required for materials of a technical nature to be included in maintenance manuals.

3.2.50 Graphic(s). Any type of presentation or representation, which gives a clear visual impression.

3.2.51 Halftones. Halftones are the tonal values of gray and black created by lines or dots. It is a conversion of a continuous tone print.

3.2.52 Header. One or more lines of standard text that appear at the top of each page (also called heads and running heads).

3.2.53 Horizontal (Landscape) TM format. Positioning of technical manual so that page horizontal (width) dimensions are greater than vertical (height) dimensions.

3.2.54 Icon. Pictorial representation; visual image to give immediate recognition of a hazard or to provide essential information.

3.2.55 Illustration. A general term meaning graphic presentations of all types. Illustrations include pictorials, functional diagrams, and line graphs. This term is used instead of such terms as figure, graphic, drawing, diagram, and artwork.

3.2.56 Index numbers and letters. A number or letter (on a figure or an illustration) usually attached to a line or an arrow which points to an object on the illustration. This number or letter corresponds to the same number or letter in a legend or text, which defines or identifies the object in the illustration.

3.2.57 Initial Graphics Exchange Specification (IGES). A standard digital form for graphics preparation. Defined by MIL-PRF-28000.

3.2.58 Inspect. To determine the serviceability of an item by comparing its physical, mechanical, and/or electrical characteristics with established standards through examination (e.g., by sight, sound, or feel).

3.2.59 Institute of Electrical and Electronics Engineers (IEEE). Membership organization that includes engineers, scientists and students in electronics and allied fields. Founded in 1963, it has over 300,000 members and is involved with setting standards for computers and communications.

3.2.60 Interactive Electronic Technical Manual (IETM). A technical manual prepared in digital form and designed for interactive display to the maintenance technicians or system operator end users by means of a computer controlled Electronic Display System (EDS).

3.2.61 International Organization for Standardization (ISO). Organization that sets international standards, founded in 1946 and headquartered in Geneva. It deals with all fields except electrical and electronics, which is governed by the older International Electrotechnical Commission (IEC), also in Geneva. With regard to information processing, ISO and IEC created JTC1, the Joint Technical Committee for information technology.

3.2.62 Jewel case. The plastic box used for storage of a compact disk.

3.2.63 Joint Photographers Experts Group (JPEG). JPEG is a file format for the transport of single JPEG compressed image. The JPEG compression format was standardized by ISO in August 1990. JPEG images are widely used on the Web.

3.2.64 Landscape mode. To print an image sideways on the page so that the longest edge of the form corresponds to the horizontal axis.

3.2.65 Legend. A tabular listing and explanation of the numbers or symbols on a figure or an illustration.

3.2.66 Line Replacement Unit (LRU). An item normally removed and replaced as a single unit to correct a deficiency or malfunction on a weapon system or end item of equipment.

3.2.67 List of effective pages/work packages. A listing of all of the pages and work packages in a TM indicating the current change for each page/work package.

3.2.68 Load limit. The design load for unrestricted operations, and/or the equivalent of a designated condition, for the load envelope cases consistent with any aircraft operational restrictions.

3.2.69 Logic tree. Diagram comprised of a branching series of questions, resulting in a "yes" or "no" answer, leading to determination and resolution of problem.

3.2.70 Logistics Management Information (LMI). The selective application of scientific and engineering efforts undertaken during the acquisition process, as part of the systems engineering process, to assist in acquiring the required support; and providing the required support during the operational phase at minimum cost. Replaces LSA.

3.2.71 Logistics Support Analysis (LSA). The selective application of scientific and engineering efforts undertaken during the acquisition process, as part of the systems engineering process, to assist in acquiring the required support; and providing the required support during the operational phase at minimum cost. Replaced by LMI.

3.2.72 Lubricant. Any solid, fluid, or semi-fluid material that performs a lubricating or related specialty function. Such materials include lubricating oils, greases, hydraulic fluids, damping fluids, dielectric coolants, anti-seize compounds, corrosion preventatives, and bonded or unbonded solid films.

3.2.73 Mailer. The cardboard envelope used to mail a compact disk to the user. The mailer consists of several panels, which contain information about the compact disk.

3.2.74 Maintenance Allocation Chart (MAC). A list of equipment maintenance functions showing maintenance level. The MAC is arranged in functional group code sequence or in top-down, breakdown sequence in a logical order of disassembly following the RPSTL order of assembly/subassembly listings.

3.2.75 Maintenance level. The separation of maintenance activities or functions in the U.S. Army according to the required skills and available facilities.

3.2.76 Maintenance step. A single maintenance action, such as setting a switch to the OFF position. Usually, a step has one action, but in certain cases, there may be a series of identical actions, such as removing seven bolts.

3.2.77 Marginal copy. Copy (generally headers and footers) placed outside that portion of the page used for either text, full page tabular data, or full page illustrations, but within the printing area dimensions of the page.

3.2.78 Modification Table of Organization and Equipment (MTOE). An authorization document that prescribes the modification of a basic TOE necessary to adapt it to the needs of a specific unit or type of unit.

3.2.79 National Item Identification Number (NIIN). The last nine digits of the National/NATO stock number. The first two digits of the NIIN identify the country assigning the number and the remaining seven digits are a serially assigned number.

3.2.80 National Maintenance Work Requirement (NMWR). A maintenance serviceability standard for depot level reparables that do not have an existing depot maintenance work requirement and for field level reparables that are repaired by maintenance activities below the depot level maintainers for return to the Army supply system.

3.2.81 National Stock Number (NSN). A 13-digit number assigned to a repair part to be used for requisitioning purposes.

3.2.82 Next Higher Assembly (NHA). Assembly or subassembly of which subject component(s) or subassembly are a subpart.

3.2.83 Nomenclature. The approved name or alphanumeric identifier assigned to an item, equipment, or component in agreement with an organized designation system.

3.2.84 Note. A statement or some other notification that adds, emphasizes, or clarifies essential information of special importance or interest.

3.2.85 Operator maintenance. Consists of inspecting, servicing, lubricating, adjusting, replacing, and repairing those items authorized by Logistic Management Information (LMI) and/or Maintenance Allocation Chart (MAC).

3.2.86 Orphan. Last line of a paragraph pushed to a new page, stranded alone (orphaned) at the top of the page without the rest of its paragraph.

3.2.87 Overall Grade Level (OGL). Computed average reading comprehensibility of specified number of document text samples. As expressed in the following formula:

$OGL = 0.39(a) + 11.8(B) - 15.59$ (rounded off to the nearest integer); where,

"A" is the average sentence length for all samples (ratio of words to sentences); and

"B" is the average number of syllables per word for all samples.

3.2.88 Overhaul. That maintenance effort (service/action) prescribed to restore an item to a completely serviceable/operational condition as required by maintenance standards in appropriate technical publications. Overhaul does not normally return an item to like new condition.

3.2.89 Page-based technical manual. A technical manual consisting of text, illustrations and tabular data presented in a standard page-oriented format.

3.2.90 Part Number (P/N). A primary number used to identify an item used by the manufacturer (individual, company, firm, corporation, or Government activity) that controls the design, characteristics, and production of the item by means of its engineering drawings, specifications, and inspection requirements.

3.2.91 Phantom. Portraying an item (i.e., part, equipment, etc.) on an illustration with broken lines rather than solid lines to de-emphasize the item.

3.2.92 Pictorial. A type of illustration showing the physical appearance of equipment or component parts. This term is used instead of such general terms as illustration, drawing, and diagram.

3.2.93 Portable Network Graphics (PNG). PNG is an extensible file format for the portable, well-compressed storage of raster images. The PNG specification was issued as a W3C Recommendation in 1996.

3.2.94 Portrait mode. To print an image the regular way so that the longest edge of the form corresponds to the vertical axis.

3.2.95 Pre-screening. A process in which a clear material with a dot pattern or crossing opaque lines is used through which an image is photographed in making a halftone.

3.2.96 Preventive maintenance (scheduled maintenance). The performance of scheduled inspections and maintenance functions necessary to keep the equipment in serviceable condition and ready for its primary mission.

3.2.97 Preventive Maintenance Checklist (PMC). A listing of all before, during, and after operation; preventive maintenance checks, including tactical and safety checks, that the operator or crew performs to ensure that the equipment is mission capable and in good operating condition.

3.2.98 Preventive Maintenance Checks and Services (PMCS). Periodic inspection and maintenance at scheduled intervals to ensure that the equipment and its components remain mission capable and in good operating condition. In aircraft, checks are required of mandatory safety-of-flight items. Lubrication is part of PMCS.

3.2.99 Readability. Text comprehensibility measured by such variables as number of syllables, words, and sentences.

3.2.100 Reading Grade Level (RGL). A measurement of reading difficulty of text related to grade levels (such as ninth grade level, fourteenth grade level, etc.).

3.2.101 Reference designator. Letters or numbers, or both, used to identify and locate discreet units, portions thereof, and basic parts of a specific equipment, assembly, or subassembly.

3.2.102 Reliability, Availability, Maintainability (RAM). Requirements imposed on materiel systems to ensure that they are operationally ready for use when needed, will successfully perform assigned functions, and can be economically operated and maintained within the scope of logistic concepts and policies.

3.2.103 Remove. To remove and install the same item when required to perform service or other maintenance functions. Install may be the act of emplacing, seating, or fixing into position a spare,

repair part, or module (component or assembly) in a manner to allow the proper functioning of an equipment or system.

3.2.104 Repair. The application of maintenance services (inspect, test, service, adjust, align, calibrate, and/or replace), including fault location/troubleshooting, removal/installation, and disassembly/assembly procedures, and maintenance actions to identify troubles and restore serviceability to an item by correcting specific damage, fault, malfunction, or failure in a part, subassembly, module (component or assembly), end item, or system. Repair is authorized by the LMI/MAC and the assigned maintenance level is shown as the fourth position code of the SMR code.

3.2.105 Repair part. Those support items that are an integral part of the end item or weapons system, which are coded as not repairable (i.e. consumable items).

3.2.106 Repair Parts and Special Tools List (RPSTL). The technical document which contains an introduction, list of repair parts, list of special tools, NSN index, part number index, and reference designator index for a specified equipment item.

3.2.107 Replace. To remove an unserviceable spare or repair part and install a serviceable counterpart in its place. Replace is authorized by the LMI/MAC and the assigned maintenance level is shown as the third position code of the SMR code.

3.2.108 Revision. A revision is comprised of corrected, updated, or additional pages or work packages to the current edition of a manual. It consists of replacement work packages that contain new or updated technical information, or improves, clarifies or corrects existing information in the current edition of the manual.

3.2.109 Schematic diagram. A graphic representation showing the interrelationship of each component or group of components in the equipment. The essential characteristic of these diagrams is that every maintenance-significant functional component is separately represented. Also, where appropriate, voltage readings should be shown.

3.2.110 Sentence. A group of words conveying a complete thought and terminated by a semicolon, period, exclamation mark, or question mark. Headers, captions, and paragraph titles are not considered sentences.

3.2.111 Service. Operations required periodically to keep an item operating, i.e., to clean (includes decontaminate, when required), to preserve, to drain, to paint, or to replenish fuel, lubricants, chemical fluids, or gases.

3.2.112 Source, Maintenance, and Recoverability (SMR) code. The five-position code containing supply/requisitioning information, maintenance level authorization criteria, and disposition instruction. The first two positions of the SMR code determine how to get an item. The third position represents who can install, replace, or use the item. The fourth position dictates who can do complete repair on the item. The fifth position represents who determines disposition action on unserviceable items.

3.2.113 Spare part. Those support items that are an integral part of the end item or weapons system that are coded as repairable (i.e. reparable items). Spares include those equipment authorized by TOE line item plus equipment, assemblies, and modules designated as operational readiness float. TOE training equipment is excluded.

3.2.114 Special tools. Those tools that have single or peculiar application to a specific end item/system.

3.2.115 Specialized Repair Activity (SRA). A level of maintenance usually characterized by the capability to perform maintenance functions requiring specialized skills, disciplined quality control, highly sophisticated and expensive special tools, and TMDE. Its phases normally consist of adjustments, calibration, alignment, testing, troubleshooting, assembly, disassembly, fault isolation, and repair of unserviceable parts, modules, and printed circuit boards (PCB).

3.2.116 Standard Generalized Markup Language (SGML). A language for document representation that formalizes markup and frees it of system and processing dependencies.

3.2.117 Standard Generalized Markup Language (SGML) declaration. Defines which characters are used in a document instance, in which syntax the DTD is written, which SGML features are used, etc.

3.2.118 Sticky Headers. Column headers of a scrollable table that remain at the top of the frame.

3.2.119 Subassembly. Two or more parts that form a portion of an assembly or a component replaceable as a whole, but having a part or parts that are individually replaceable (e.g., gun mount stand, window recoil mechanism, floating piston, intermediate frequency strip, mounting board with mounted parts).

3.2.120 Table of Organization and Equipment (TOE). A document that prescribes the wartime mission, capabilities, organizational structure, and mission essential personnel and equipment requirements for military units.

3.2.121 Technical Manual Quality Assurance (TMQA) program. A systematic, coordinated effort to establish a high level of confidence that the TM product offered conforms to established, contractually defined technical requirements. A QA program includes efforts by the contracting activity and acquiring activity, including, but not limited to, IPRs, validation, and verification.

3.2.122 Technical Manuals (TMs). Manuals that contain instructions for the installation, operation, maintenance, and support of weapon systems, weapon system components, and support equipment. TM information may be presented, according to prior agreement between the contractor and the Government, in any form or characteristic, including hard printed copy, audio and visual displays, disks, other electronic devices, or other media. They normally include operational and maintenance instructions, parts lists, and related technical information or procedures exclusive of administrative procedures.

3.2.123 Test. To verify serviceability by measuring the mechanical, pneumatic, hydraulic, electrical, or electronic characteristics of an item and comparing those characteristics with prescribed standards.

3.2.124 Test, Measurement, and Diagnostic Equipment (TMDE). Any system or device used to evaluate the operational condition of an end item or subsystem thereof, or to identify and/or isolate any actual or potential malfunction. TMDE includes diagnostic and prognostic equipment, semiautomatic and automatic test equipment (with issued software), and calibration test or measurement equipment.

3.2.125 Text. The written parts of the technical sections excluding labels, legends, and callouts in illustrations.

3.2.126 Top-down breakdown. The pyramidal breakdown of an end item with the top item being the complete end item. The process of breakdown is established from the engineering drawing structure in an NHA progression until the lowest reparable in each family tree group is identified. All non-reparables can be identified in like manner to establish their NHA relationships.

3.2.127 Unit maintenance. The responsibility of a using organization to perform maintenance on its assigned equipment. It normally consists of inspecting, servicing, lubricating, adjusting, and replacing parts, minor assemblies, and subassemblies. The replace function for this level of maintenance is indicated by the letter "O" in the third position of the SMR code. An "O" appearing in the fourth position of the SMR code indicates complete repair is possible at the unit maintenance level.

3.2.128 User. A person using the technical manual.

3.2.129 Validation. The process by which the contractor tests a TM for technical accuracy and adequacy, comprehensibility, and usability.

3.2.130 Verification. The final QA iteration by the Government for acceptance of the TM during which a TM is tested to determine its adequacy and operational suitability for operation and maintenance of equipment or systems using target audience personnel. The government may perform their verification by observing the contractor's validation.

3.2.131 Vertical TM format. Positioning of technical manual so that page horizontal (width) dimensions are less than vertical (height) dimensions.

3.2.132 Warning. A statement or some other notification about an operating or maintenance procedure, practice, or condition that, if not strictly observed, could result in long term health hazard, injury to, or death of personnel performing the task prescribed in the TM.

3.2.133 Widow. First line of a paragraph that is left alone (widowed) at the bottom of a page.

3.2.134 Wiring diagram. Diagram illustrating signal flow or wiring connections. Where appropriate, voltage readings should be shown.

3.2.135 Word. Any string of characters (including letters, numbers, symbols, and groups of letters) separated from other strings by one or more spaces. Hyphenated words and contractions count as one word. For example, each of the following count as one word: couldn't; GFE; i.e.; 32,008; 19-inch; +25°F; left-hand. Thus, a sentence like "The left-hand MLG door shouldn't open more than 25°." consists of 9 words.

3.2.136 World Wide Web Consortium (W3C). The World Wide Web Consortium (W3C) develops interoperable technologies (specifications, guidelines, software, and tools) to lead the Web to its full potential. W3C is a forum for information, commerce, communication, and collective understanding.

3.2.137 Work Packages (WPs). Presentation of information functionally divided into individual task packages in the logical order of work sequence. These WPs should contain stand alone general information, descriptive, theory, operating, maintenance, troubleshooting, parts, and supporting information units containing all information required for directing task performance.

3.2.138 XML Style sheet Language (XSL). A language for transforming XML documents into other XML documents, such as HTML.

4. PAGED-BASED TECHNICAL MANUAL DEVELOPMENT.

4.1 General. This section is intended to provide guidance and further clarify the requirements contained in MIL-STD-40051, Standard Practice Standard: Preparation of Digital Technical Information for Multi-Output Presentation of Technical Manuals. The general style, format, and graphics guidance contained herein is applicable for the preparation of the following types of page-based technical manuals developed to the work package (WP) concept. For electronic page-based manuals, see appendix A for guidance on preparation of the CD face, flyleaf, and mailers.

a. Operator level (-10).

b. Unit maintenance level (-20) and unit maintenance level with Repair Parts and Special Tools List (RPSTL) (-20&P).

c. Direct support maintenance level (-30) and direct support maintenance level with RPSTL (-30&P).

d. General support maintenance level (-40) and general support maintenance level with RPSTL (-40&P).

e. Combined operator and unit maintenance levels (-12) and operator and unit maintenance levels with RPSTL (-12&P).

f. Combined operator, unit, and direct support maintenance levels (-13) and operator, unit, and direct support maintenance levels with RPSTL (-13&P).

g. Combined operator, unit, direct support, and general support maintenance levels (-14) and operator, unit, direct support, and general support maintenance levels with RPSTL (-14&P).

h. Combined unit and direct support maintenance levels (-23) and unit and direct support maintenance levels with RPSTL (-23&P).

i. Combined unit, direct support, and general support maintenance levels (-24) and unit, direct support, and general support maintenance levels with RPSTL (-24&P).

j. Combined direct support and general support maintenance levels (-34) and direct support and general support maintenance levels with RPSTL (-34&P).

k. Depot Maintenance Work Requirements (DMWR) and DMWR with RPSTL.

l. National Maintenance Work Requirement (NMWR) and NMWR with RPSTL.

m. Aviation Unit Maintenance (AVUM) level (-20) and AVUM level with RPSTL (-20&P) (**Aviation only**).

n. Aviation Intermediate Maintenance (AVIM) level (-30) and AVIM level with RPSTL (-30&P) (**aircraft only**).

o. Combined AVUM and AVIM levels (-23) and AVUM, and AVIM and AVUM levels with RPSTL (-23&P) (**Aviation only**).

p. All RPSTLs **(-**P).

q. Aircraft troubleshooting (-T).

r. Aircraft preventive maintenance services (PMS).

s. Aircraft phased maintenance inspection services (PMI).

4.2 Comprehensibility. Comprehensibility requirements for page-based technical manuals are provided in 4.3 through 4.8.5

4.3 Reading Grade Level (RGL) and target audience description. TMs are written at the RGL specified by the acquiring activity. The RGL should match the capability of the manual users (i.e., the target audience description).

4.4 RGL measurements. The method used to determine RGL is optional. Measurements cited in these requirements should be based either on the technical contents sections of the entire TM or on samples obtained using a method similar to that presented in Appendix D. RGL may be calculated using the procedures described in Appendix D.

4.5 Nomenclature.

4.5.1 Nomenclature consistency and applicability. Nomenclature, other terms, and names should be consistent within a manual and throughout the RPSTL, MAC, and other directly related manuals. Statements that explain applicability for individual items of equipment should use specific serial numbers, block designations, model designations, or similar identification. Such terms as "on later equipment" and "on early serial numbers" should not be used.

4.5.2 Official/approved nomenclature. Unless specified otherwise by the acquiring activity, only approved names and official nomenclature should be used. (Official nomenclature is the nomenclature used in the RPSTL.) If unofficial nomenclature (common name) is approved, an appropriate nomenclature cross-reference list should be prepared for the TM. Shortened versions of the approved nomenclature are not considered deviations. Approved nomenclature should be used wherever the use of a common name might be ambiguous.

4.5.3 Neutral terms. TMs should make no reference to age, sex, race, or national origin. Use sex neutral terms. Terms such as "midshipman" and "workman" are considered sex neutral. Terms such as male and female connectors, pins, etc., are acceptable.

4.5.4 Military terms. Military terms used should be in accordance with Joint Pub 1-02, or any approved dictionary or glossary of Army military terms.

4.5.5 Automatic electronic test and checkout terminology. Terms used for automatic electronic test and checkout should be in accordance with MIL-STD-1309.

4.6 Standard English grammar. The U.S. Government Printing Office Style Manual should be used as a general guide for standard American English usage, i.e., capitalization, punctuation, compounding of words, numerals in the text, spelling of nontechnical words, etc. Colloquial and slang expressions shoould not be used. Refer to MIL-PRF-87268 for comprehensibility requirements for IETMs.

4.7 Narrative, nonprocedural text.

a. Word order. Narrative text (nonprocedural) should be written using simple word order (subject, verb, object) to the extent possible. Modifiers, including prepositional phrases, should be as close as possible to the word modified. Simple word order shouldl ordinarily be used for description and discussion statements such as warnings cautions and notes.

b. Topical sentence. When necessary, for greater clarity, the first sentence of each paragraph should be the topical sentence. The topical sentence describes or summarizes the content of the paragraph. All information in the paragraph relates to the topical sentence.

c. Limitations for nonprocedural text. Explanatory, descriptive, or theoretical text should not contain procedures.

4.8 Procedural text. Detailed task steps should be identified and then properly worded for the target audience. Task steps should be organized in a logical order. They should be presented so that they sequentially show what action the user will be performing or what the user sees or detects on the equipment at each step of the procedure. Procedural steps should be worded and arranged in the order that will provide the most effective and efficient results. Emphasis should be placed on the specific steps to be followed, the results that may be expected or desired, and the corrective measures required when the expected results are not obtained.

4.8.1 Lead-in. Procedural steps should not be prefaced by a lead-in that merely duplicates the title as in the following example: "Disassembly of a sensing unit. The sensing unit is disassembled according to the following procedure: ..."

4.8.2 Form and content of procedures. A procedural step should be limited to a single operation or to repetitions of a single operation with the following exceptions:

a. If simultaneous operations are required, they will be listed together in the same step.

b. If the step represents a detailed procedure, so basic that the details should rarely be needed by the intended users, or if the procedure is very frequently repeated, such as turn on, turn off, and calibrate procedures, the written procedure for that step will use a single verb and cite a reference to the detailed steps (e.g., "Turn equipment ON. [See WP 0056 00 for details.]").

c. If needed, text will show verification of the result of a procedure performed in the step (e.g., "Press push-button A and be sure indicator A is lit.").

4.8.3 Limitations for procedural text. Procedures should not contain explanatory, descriptive, or theoretical material (except in notes, etc.).

4.8.4 Sentences in procedures. Sentences directing the actions of the user will begin with the verb (e.g., Remove four screws (figure 1, item 1) and cover (figure 1, item 2).). If more than one person is involved, the directions will be in the active voice, for example, Cannoneer 1 shall... while Cannoneer 2... .

4.8.5 Positive form. Procedural steps will be in positive form (i.e., "Close container." rather than "Do not leave container open.") unless the meaning demands the negative form.

4.9 Selective application and tailoring. This section contains guidance, which may not be applicable for the preparation of all TMs listed in 4.1. Selective application and tailoring of requirements are the responsibility of the acquiring activity and is accomplished using MIL-STD-40051. If an identifiable, written conflict exists between this handbook and the detailed content standard, the detailed content standard takes precedence.

4.10 Style and format for printed page-based TMs. The style and format guidance provided in this section is recommended for use when acquiring page-based TMs for the U.S. Army. Style sheets developed in accordance with MIL-STD-2361 interpret the style and format requirements contained in MIL-STD-40051 and this section.

4.11 Obtaining the DTDs, and style sheets. Information on using and obtaining the DTDs, style sheets, associated tag and attribute descriptions, which are XML constructs, and SGML to XML element mapping are contained in MIL-STD-2361.

4.12 Figures contained in this handbook. The figures provided in this handbook are intended to illustrate style and format only. They should not be used for the interpretation of technical content or detailed maintenance task requirements. Text and language requirements are established by the applicable technical manual content requirements specification and the requirements provided in this section.

4.13 Copyrights, proprietary names, and advertising.

4.13.1 Copyright/copyright credit line. TMs should not contain copyrighted material except as specified in the Federal Acquisition Regulations (FAR) and Defense Federal Acquisition Regulation (DFAR) Supplement. When copyrighted material is included in a TM, the TM developer should obtain prior written permission from the copyright owner or authorized agent for its use. The written permission should contain a statement declaring whether or not a copyright credit line is required.

4.13.2 Proprietary names. Do not use trade names, copyrighted names, or other proprietary names applying exclusively to the product of one company unless the items cannot be adequately described because of the technical involvement, construction, or composition. In such instances, list one, and if possible, several commercial products, followed by the words "or equal." The same applies to manufacturers' part numbers or drawing numbers for minor parts where it is impractical to specify the exact requirements. If possible, define the particular characteristics required for the "or equal" products.

4.13.3 Advertising. Publication material should not contain advertising matter.

4.14 Development of work package technical manuals. The style and format guidance provided in this section has been established to facilitate the development of technical information for the WP concept. The WP concept is defined as a logical combination of requirements and improved presentation techniques designed to enhance digital display of page-formatted pages. A WP technical manual is specifically designed to support individual functional information or maintenance work tasks for a weapon system or equipment in accordance with the requirements of MIL-STD-40051.

4.14.1 Types of work packages. There are two types of work packages: information oriented and task oriented.

4.14.1.1 Information oriented work package. Information oriented work packages provides support information such as general information about the TM or weapon system/equipment, theory of operation, and operating instructions. Additional data that supports the maintenance tasks, such as, lists of expendable and durable items, manufactured items, Components of End Item (COEI) and Basic Issue Items (BII) lists, etc. are also considered information oriented WPs.

4.14.1.2 Task oriented work package. Task oriented work packages reflect all required maintenance and testing and troubleshooting tasks at the assigned level of maintenance, and environment, material, and support equipment required for each defined task. WPs are written to reflect the engineering design, Logistics Management Information (LMI), approved maintenance plan, and the established repair concept (SMR Codes).

4.14.2 Technical manuals developed in accordance with MIL-STD-40051. The hierarchy of a page-based TM consists of front and rear matter, and a series of work packages that include the types of data listed in paragraphs 4.14.3 through 4.14.9. These data types can be used to prepare page-based technical manuals at all levels of maintenance through depot. Each of these parts

provides instructions on how to develop and structure the required technical information into chapters containing individual work packages in a logical order of work sequence. These WPs are stand-alone units containing all information essential for directing task performance. Chapters are used to divide the TM data into the specific functional information listed in paragraphs 4.14.4 through 4.14.9. For simple equipment, a single chapter may suffice for each functional element. For complex weapon systems/equipment, it may be necessary to create several chapters for each of the functional elements (e.g., a separate maintenance chapter for each system of an aircraft or a tank). Each chapter is made up of one or more work packages.

4.14.3 Front and rear matter for page-based TMs. Each page-based TM should include front and rear matter necessary to supplement the technical content chapters and associated work packages required by MIL-STD-40051-1 through MIL-STD-40051-6.

4.14.3.1 Front matter. Refer to MIL-STD-40051 for detailed requirements for the preparation of front matter.

4.14.3.2 Rear matter. Rear matter consists of the following data. Refer to MIL-STD-40051 for detailed requirements for the preparation of rear matter. For RPSTLs, the glossary and alphabetical index is not required.

a. Glossary.

b. Alphabetical index.

c. Foldout pages.

d. Reporting errors and recommending improvements DA Forms 2028.

e. Authentication page.

f. Back cover.

4.14.4 General information, equipment description and theory of operation chapter. General information, equipment description, and theory of operation chapter data is divided into the following specific types of work packages, as applicable to the weapon system/equipment. Refer to Figures 1 through 3 for typical examples of description and theory of operation WPs.

a. General information work package.

b. General information work package (**Preventive Maintenance Services Manual only**).

c. General information work package (**Phased Maintenance Manual only**).

d. Equipment description and data work package.

e. Theory of operation work package.

4.14.5 Operator instructions chapter. Operator instructions data is divided into the following specific work packages, as applicable to the weapon system/equipment. Refer to Figures 4 and 5 for typical examples of operator instruction WPs.

a. Description and use of controls and indicators work package.

b. Operation under usual conditions work package(s).

c. Operation under unusual conditions work package(s).

d. Stowage and decal/data plate guide work package.

e. On-vehicle equipment loading plan work package.

4.14.6 Troubleshooting procedures chapter. Troubleshooting procedures data is divided into the following specific work packages, as applicable to the weapon system/equipment. Refer to Figures 6 through 11 for typical examples of troubleshooting procedures WPs.

a. Introduction work package **(Aircraft Troubleshooting Manual only**).

b. Troubleshooting index work package.

c. Preshop analysis work package (**DMWRs/NMWRs only**).

d. Technical description work package (Aircraft Troubleshooting Manual only).

e. Component checklist work package (**DMWRs/NMWRs only**).

f. Operational checkout and troubleshooting work package.

4.14.7 Maintenance instructions chapter. Maintenance instruction data is divided into the following specific work packages, as applicable to the weapon system/equipment. Refer to Figures 12 through 24 for typical examples of maintenance instructions WPs. The task oriented maintenance work packages contain all authorized maintenance tasks, such as remove, inspect, service, test, install, replace, disassemble, assemble, repair, clean, adjust, align, etc. for the overall weapon system/equipment and each maintainable subsystem, assembly, and component.

a. Service upon receipt work package **<surwp>**.

b. Equipment/user fitting instructions work package **<perseqpwp>**.

c. Preventive Maintenance Checks and Services (PMCS) work packages.

(1) PMCS introduction work package **<pmcsintrowp>**.

(2) PMCS work package **<pmcswp>**.

d. Preventive maintenance inspections work package (**aircraft only**) **<pmiwp>**.

e. Aircraft lubrication instructions work package **<lubewp>**.

f. Ammunition maintenance work package **<ammowp>**.

g. Auxiliary equipment maintenance work package **<auxeqpwp>**.

h. Facilities work package (**DMWRs/NMWRs only**) **<facilwp>**.

i. Task oriented maintenance work packages **<maintwp>**.

j. General maintenance work package **<gen.maintwp>**.

k. Phased maintenance inspection work package **<pms-inspecwp>**.

l. Preventive maintenance services inspection work package **<pmi-cklistwp>**.

m. Overhaul inspection procedure (OIP) work package (**DMWRs/NMWRs only**) **<oipwp>**.

n. Illustrated list of manufactured items work package **(-20/AVUM or above only**) **<manuwp>**.

o. Torque limits work package **(-20/AVUM or above only) <torquewp>**.

p. Ammunition marking information work package **<ammo.markingwp>**.

q. Foreign ammunition (NATO) work package **<natowp>**.

r. Aircraft inventory master guide work package (**aircraft only**) **<inventorywp>**.

s. Storage of aircraft work package (**aircraft only**) **<storagewp>**.

t. Weighing and loading work package (**aircraft only**) **<wtloadwp>**.

u. Depot mobilization requirements work package (**DMWRs/NMWRs only**) **<mobilwp>**.

v. QA requirements work package (**DMWRs/NMWRs only**) **<qawp>**.

w. Wiring diagram work package **<wiringwp>**.

4.14.8 Repair parts and special tools lists. Repair parts and special tools lists data is divided into the following specific work packages, as applicable. Refer to MIL-STD-40051 for typical examples of repair parts and special tools lists WPs.

a. Introduction work package.

b. Repair parts list work package.

c. Special tools list work package.

d. Cross-reference index work packages.

4.14.9 Supporting information chapter. Supporting information data is divided into the following specific work packages, as applicable to the weapon system/equipment. Necessary supporting data for a specific weapon system, equipment, or component, that does not fall under the supporting information categories listed below, may be placed into as many additional work packages as required. These work packages should follow the last required work package of those listed in a. through k. The supporting information work packages listed below were formerly referred to as appendices, however, with the creation of the work package concept, it is no longer necessary to title this information as appendices. Refer to MIL-STD-40051 for typical examples of supporting information WPs.

a. References work package.

b. Introduction for maintenance allocation chart (MAC) work package.

c. MAC work package.

d. RPSTL work package.

e. Components of end item (COEI) and basic issue items (BII) lists work package.

f. Additional authorization list (AAL) work package.

g. Expendable and durable items list work package.

h. Tool identification list work package.

i. Mandatory replacement parts work package.

j. Critical safety items (CSI) and flight safety critical aircraft parts (FSCAP) work package.

k. Support items work package.

l. Additional work packages.

4.15 How to develop a work package TM. The following general process should be followed when acquiring weapon system/equipment work package TMs.

a. Review contractual requirements and the filled-out TM content selection matrices supplied with the contract. (Refer to Figure 25.)

b. Develop a detailed TM outline, for each TM, using the filled-out TM content selection matrices as a guide.

c. Access or obtain the required DTDs. Refer to MIL- STD-2361.

d. Develop an XML tagged source file for each WP (Refer to Figure 26).

e. Assemble individual WPs into specific TMs in accordance with TM content selection matrices, using the assembly DTD. Refer to MIL- STD-2361.

4.15.1 How to develop work packages. The proponent activity should apply the requirement of weapon systems, equipment or component engineering design to the development of the technical manuals. The acquiring activity together with the proponent activity should provide the TM developer with the filled-in TM content selection matrices provided in MIL-STD-40051. Based on these content selection matrices, it is suggested that TM outlines be developed reflecting the arrangement and alignment of the required technical information into the required chapters and work packages. The guidelines set forth in the approved LMI or maintenance plan dictates the technical content of the WP manuals.

4.15.1.1 Development of individual work packages. Ideally, each WP in a manual should be an independent, stand alone data unit. The author may be required to group some information or maintenance tasks in one work package and divide others into several WPs of suitable length. Division or selection of coverage will depend on various factors. These factors may include but are not limited to:

a. A specific work package that is required by MIL-STD-40051.

b. A specific work package that is required by the TM content selection matrix provided by the contract activity. An "R " included for a specific WP requirement contained in the TM content selection matrix denotes that a WP is mandatory and should be included in the TM.

c. A WP may be determined by the operational modes, complexity of the maintenance action, or level(s) of maintenance covered. Separate maintenance WPs may be developed for the same equipment or component for different maintenance levels (e.g., a WP for operator’s maintenance and a WP for direct support maintenance for the same item of equipment).

d. Two or more WPs for an identical maintenance task may be required because the task is performed differently due to differences in configurations.

e. More than one WP may be required because the size of the work package exceeds 30 pages.

f. It is permissible to divide a set of maintenance tasks for a specific system, equipment or component into two or more WPs to comply with the page size limitation. (e.g., removal and installation procedures could be placed in one WP and disassembly, cleaning, repair, and reassembly could be placed in a second WP).

g. Development of more than one WP because the reduction in the size of the work package would make it more useable.

h. Confining the information to one WP because dividing the information into several work packages would degrade the usability.

i. Splitting a disassembly procedure into two separate WPs would degrade the usability of the maintenance procedure.

j. Separate WPs due to different initial setup information for a set of maintenance tasks for a repairable component.

k. If the support equipment, tools, materials and personnel used to perform removal and installation is very different than the support equipment, tools, materials and personnel used to perform disassembly and reassembly for the same system or component, it may be better to separate this information into two WPs.

4.15.2 Creating an outline for a TM. An outline for the -14&P, Operator's, Organizational, Direct Support, and General Support Maintenance Including RPSTL TM for a typical Van Semitrailer may look similar to the sample outline provided below.

4.15.2.1 Front Matter. The front matter for the manual should consist of the following:

Front Cover.

Warning Summary

List of effective pages/work packages

Title Block Page

Table of Contents

How to Use This Manual

4.15.2.2 Chapters should be arranged in the following order. However, based on the complexity of the weapon system/equipment, more than one chapter may be created for a specific functional area (e.g., maintenance of an aircraft's electrical systems, fuel system, flight control system may be placed in separate chapters or all maintenance at all maintenance levels for a rifle may be placed in one combined Chapter).

Chapter 1. General Information, Equipment Description, and Theory of Operation

Work Packages

0001 00 General Information

0002 00 Semitrailer Equipment Description and Data

0003 00 Air Over Hydraulic Brake System Theory of Operation

0004 00 Electrical System Theory of Operation

Chapter 2. Operator Instructions

Work Packages

0005 00 Semitrailer Description and Use of Operator Controls and Indicators

0006 00 Semitrailer Operation Under Usual Conditions

0007 00 Semitrailer Operation Under Unusual Conditions

Chapter 3. Operator Troubleshooting Procedures

Work Packages

0008 00 Symptom Index

0009 00 Operator Troubleshooting

Chapter 4. Unit Troubleshooting Procedures

Work Packages

0010 00 Symptom Index

0011 00 Air Over Hydraulic Brake System Troubleshooting

0012 00 24-Volt Electrical System Troubleshooting

0013 00 110-Volt Electrical System Troubleshooting

Chapter 5. Operator Maintenance Instructions

Work Packages

0014 00 Operator/Crew PMCS

0015 00 Electrical Connectors Maintenance

0016 00 Couplings Maintenance

0017 00 Air Reservoir Maintenance

0018 00 Tire and Wheel Assembly Maintenance

Chapter 6. Unit Maintenance Instructions

Work Packages

0019 00 Semitrailer Service Upon Receipt

0020 00 Organizational PMCS

0021 00 Semitrailer General Maintenance Procedures

0022 00 Semitrailer Lubrication Procedures

0023 00 Electrical System Maintenance

0024 00 Body Maintenance

0025 00-0031 00 Additional Maintenance WPs

Chapter 7. Direct Support and General Support Maintenance - Electrical Systems

Work Packages

0032 00 110-Volt Connector Receptacle Repair

0033 00 24-Volt Connector Receptacle Repair

0034 00 24-Volt Domelights Wire Harness Repair

0035 00 Wall Receptacle Cables Repair

Chapter 8. Direct Support and General Support Maintenance - Semitrailer Body

Work Packages

0036 00 Side Door and Right Rear Door Repair

0037 00 Deck Repair

0038 00 Semitrailer Body Repair

Chapters 9-12. Additional Semitrailer Systems Direct Support and General Support Maintenance Chapters

Chapter 13. Supporting Information

Work Packages

0101 00 References

0102 00 MAC Chart Introduction

0103 00 MAC Chart

0104 00 RPSTL Introduction

0105 00 RPSTL

0106 00 COEI/BII Lists

0107 00 AAL List

0108 00 Expendable and Durable Items List

0109 00-0114 00 Additional Supporting Information WPs

4.15.2.3 Rear Matter. As applicable, material following the last text page should consist of the following types of informaiton:

Glossay Pagds

Foldout Pages

Alphabetical Index Pages

DA Form 2028

Authentication Page

Back Cover

For RPSTLS, the Glossary and Alphabetical Index is not required.

4.15.3 Development of an XML source file. Once an outline is prepared and all the work packages have been identified, a SGML/XML tagged source file (document instance) should be developed for each WP. (Refer to Figure 26.) The SGML/XML tagged source file is composed of coded ASCII, marked up (tagged) in accordance with the applicable DTD. In order to tag WP text appropriately, the author inserting the tags should be familiar with the DTD or should provide the text file to a person who is experienced with the DTD and who understands the type of documentation being written, especially when content tags are used. A customized template modeled for the applicable DTD may be available or developed to assist the author in creating the document

instance. A template can be implemented in a text editor, a WYSIWYG editor, a data base input form, or an XML authoring/composition system. The final deliverable should be an XML source file compliant to MIL-STD-2361 DTD.

4.15.3.1 Work package identification numbers. For data base retrieval purposes, a unique number should be assigned to the source file for each WP. The WP identification number should remain the same throughout the life of the WP. These numbers should be assigned by the acquiring activity in accordance with the requirements contained in MIL-STD-40051. Refer to Figure 26 for an example of WP identification number inclusion in a source file.

4.15.3.2 Printing the TM. As specified by the contracting activity, XSLs or style sheets may be used to produce final reproducible paper copy for all TMs prepared in accordance with this standard.

4.15.3.2.1 Printing the TM using a style sheet. A style sheet may be used in lieu of a XSL style sheet to specify the desired appearance of the information content of the document instance. The style sheet provides the same formatting requirements to an authoring/composition system as does a XSL style sheet.

4.15.3.2.2 Printing the TM using XSL style sheets. XSL style sheets specify the desired appearance of the information content of the document instances. Document formatting requirements such as page layout and hyphenation rules are specified in the XSL style sheets, as well as how document elements such as paragraph titles, tables, and lists are to be formatted. The XSL style sheets or style sheet provides the composition and imaging characteristics to be applied to the XML tagging (including attributes) of an XML tagged text source file (document instance) to present the text material in paginated presentation form.

4.16 Format.

4.16.1 Major divisions. The hierarchical breakdown of a TM is: volumes (if required), chapters, and work packages (WP). Each division used should have at least two occurrences (for example where there is a Volume 1, there should be a Volume 2; where there is a Chapter 1, there should be a Chapter 2; etc.). Multiple volumes should be partitioned only between chapters.

4.16.2 Work packages. Work packages (WP) are used to logically divide all data required for a certain function (i.e., descriptive information, operator's instructions, maintenance, troubleshooting, repair parts, supporting information, etc.). Procedural maintenance tasks or descriptive information contained in a WP consists of a series of paragraphs and procedural steps. When it is necessary to divide a maintenance task into subtasks, for clarity, subparagraph titles may be used. Refer to paragraph 4.16.3. The words "END OF WORK PACKAGE " are placed below the last data item (i.e., text, illustration, etc.) in any WP containing procedural tasks.

4.16.3 Paragraphs.

a. Paragraphs contained within a WP are not numbered.

b. Paragraphs and subparagraphs within a work package may have titles. If titled, the title should begin at the left margin. A first level paragraph title is in all capital letters. Lower level paragraph titles have the first letter of the first word and of each principle word capitalized.

c. When titled paragraphs are continued on subsequent pages, the first level paragraph title is placed at the top of those pages (e.g., **REMOVAL** - Continued).

d. All titles are in boldface type. Paragraph text begins flush left and stand alone.

e. Text following paragraph titles stands alone (i.e., text should not run-in with the title). Text begins flush left, on the second line following the paragraph title.

4.16.4 Procedural steps. Procedural steps present detailed, step-by-step instructions for performing an operational or maintenance task - such as turning on a test set; changing oil; replacing a part; repairing an assembly; or inspecting, cleaning, or removing an item of equipment, etc. Procedural steps are presented in a logical sequence and reflect the sequence in which the tasks are actually performed. Procedural steps and substeps are numbered consecutively with Arabic numerals or lower case letters. Procedural steps are placed immediately after paragraph or subparagraph titles, or, if applicable, after a small paragraph that introduces the procedural steps. The following demonstrates, by example, how procedural steps are placed after a paragraph title or subparagraph title.

EXAMPLE 1

REMOVAL (Example of a paragraph title)

There are two gunner-plug eyecups. One is on the commander's relay assembly and one is on the ISU. Both are replaced the same way. The ISU gunner-plug eyecup is illustrated below.

1. Remove gunner-plug eyecup (figure 1, item 1) from eyepiece assembly (figure 1, item 3).

2. Remove screw (figure 1, item 4), screw sleeve (figure 1, item 5), washer (figure 1, item 6), and gunner-plug eyecup (figure 1, item 1) from ISU (figure 1, item 2).

OR

REMOVAL

1. Move SENSOR SELECT knob (figure 1, item 5) to NEUTRAL.
2. Loosen two setscrews (figure 1, item 7).
3. Remove SENSOR SELECT knob (figure 1, item 5) from SENSOR SELECT shaft (figure 1, item 6).

EXAMPLE 2

REMOVAL

There are two gunner-plug eyecups. One is on the commander's relay assembly and one is on the ISU.

Commander's Relay Assembly Gunner-Plug Eyecup. ***(Example of a subparagraph title)***

1. Remove gunner-plug eyecup (figure 1, item 1) from eyepiece assembly (figure 1, item 3).

2. Remove screw (figure 1, item 4), screw sleeve (figure 1, item 5), washer (figure 1, item 6), and gunner-plug eyecup (figure 1, item 1) from the commander's relay assembly (figure 1, item 2).

ISU Gunner-Plug Eyecup.

1. Remove gunner-plug eyecup (figure 1, item 1) from eyepiece assembly (figure 1, item 3).
2. Remove screw (figure 1, item 4), screw sleeve (figure 1, item 5), washer (figure 1, item 6), and gunner-plug eyecup (figure 1, item 1) from ISU relay assembly (figure 1, item 2).

4.16.4.1 Procedural step levels. When required, procedural steps may be divided into no more than six levels. The following demonstrates, by example, how procedural steps and substeps levels are formatted and numbered.

EXAMPLE:

1. Primary procedural step number (1, 2, 3, etc.) is flush left. Text begins two spaces after the period following the numeral. The text is blocked.

   a. The first-level procedural substep step letters, (a, b, c, etc.), are immediately below the text of the first-level procedural steps. Titles are not allowed. The text is blocked. If additional substep letters are required, use aa., ab., etc. after z.

      (1) The second-level procedural substep step numbers, ((1), (2), (3), etc.), are immediately below the text of first-level procedural substeps. Titles are not allowed. The text is blocked.

         (a) The third-level procedural substep step letters, ((a), (b), (c), etc.), are immediately below the text of second-level procedural substeps. Titles are not allowed. The text is blocked. If additional substep letters are required, use (aa), (ab), etc. after (z).

            1 The fourth-level procedural substep step numbers, (1, 2, 3, etc.), are immediately below the text of third-level procedural substeps. Titles are not allowed. The text is blocked.

               a The fifth-level procedural substep step letters, (a, b, c, etc.), are immediately below the text of fourth-level procedural substeps. Titles are not allowed. The text is blocked. If additional substep letters are required, use aa, ab, etc. after z.

4.16.5 Tables and lists.

4.16.5.1 Table locations.

a. Tables are inserted in the TM on the same page or as soon after the first reference in the text as possible.

b. Full-page tables using a horizontal (landscape) format are positioned so that the page is rotated 90 degrees clockwise to be read. The table number and title are placed at the bottom of the page as it exists before rotation.

4.16.5.2 Table numbering. Tables are numbered consecutively within each WP in the order of their reference starting with Arabic number 1. If only one table is referenced in a WP, it is numbered.

4.16.5.3 Table titles. Each table has a title. The titles identify the contents or purpose of the table and distinguish that table from others in the TM.

a. The table title consists of the word "Table" followed by the table number, a period, two spaces, and the title. A period follows the last word of the title. Capitalize the first letter of the first and each major word of the title. Table titles are in boldface type.

b. Center table titles above the table. If the title is too long to fit on one line, align the second line with the first letter of the title.

c. Identify tables applicable to one Service only in a joint service TM. (For example, **Table 3. Fuel Indicator Correction Factors (Army Only).**)

d. Identify tables applicable to more than one service in a joint service TM. (For example, **Table 1. UHF Radio Controls (Army and Navy Only).**)

e. When a table is continued on more than one page, the table number and title is repeated followed by a dash and the word "Continued". The closing rule is omitted at the foot of a continued table; the opening rule is continued at the head of the continued portion along with the heading title data.

4.16.5.4 Table format. Certain required tables in MIL-STD-40051 are referred to as "standard information" tables. Tables designated as standard information have no deviations to the number of columns and the titles in the column headings. The format and table headings are automatically generated by the applicable DTD and XSL style sheet or style sheet used for the functional information. The following applies to all non-standard tables developed for a TM.

a. Use the CALS table model when possible (Refer to MIL-STD-2361).

b. Place a horizontal rule at the beginning (head) and at the end (foot) of a table. Title columns appropriately in boldface, uppercase letters. Place a horizontal rule under the column titles. All tables have outside vertical rules and, if required for clarity, vertical rules between columns.

c. Design tables so that related entries in different columns are aligned.

d. Align data within one column of a table by one method only, i.e., left justified, left justified with substeps indented, centered, etc. However, different columns within the same table may be presented differently, i.e., one column may have the data left justified while another column may have the data centered.

e. Tables may contain procedural steps and substeps, with a maximum of four levels (i.e., (a), (b), etc.). Number steps in accordance with 4.16.4.1. When space allows, indent the substeps two spaces.

f. Illustrations may be included within a table, if necessary.

4.16.5.4.1 Table readability and use.

a. There is clear space between columns. Row entries in tables may also be arranged in groups separated with clear space.

b. Entries are aligned within columns as follows:

(1) For decimal data, decimal points are aligned.

(2) For scientific notation, multiplication signs are aligned.

(3) All other numeric data are aligned flush right.

(4) Alphabetic or alphanumeric data may be aligned flush left, flush right, or centered. Data may also be indented.

c. Units of measure are identified in appropriate row entries or as separate column headings.

d. The user should not be required to interpolate (estimate between tabled values). Avoid interpolation by expanding the table or by presenting the data in a graph.

4.16.5.5 Footnotes to tables.

a. Unless numbers would cause confusion, use consecutive superior numbers beginning with 1 for numbering footnotes to tables. (Refer to Figure 27.) The numbering system is by table. Superior lowercase letters, asterisks, or other designations may be used where numbers would cause confusion. Place footnote references at the right of letters, words, or symbols, and at the left of numbers (also at the left of such words as "None" in columns with numbers). Number references to footnotes across the page from left to right. Separate two or more footnote references occurring together by spaces, not commas.

b. Place footnotes to tables below the closing line of the applicable table unless the table is continued. (Refer to Figure 27.) If the table is continued on other pages, place all footnotes at the bottom of the page on which they are referenced.

c. For footnotes coming before the end of the table, place a one-inch horizontal rule flush left two line spaces below the table and place the footnote under the rule. Start footnotes at the end of the table on the second line below the closing rule.

d. Indent all footnotes five spaces from the left margin of the table and return carryover lines to the left margin of the table. Separate footnote numbers or other designators from the footnote text by two spaces. (Refer to Figure 27.)

4.16.5.6 Lists.

a. Definition list. The definition list consists of the term and the definition. It may have the headers, Term and Definition above the appropriate sections of the list. Refer to MIL-STD-2361 or MIL-PRF-28001 for more information on the development of lists.

b. Random list. The random list consists of one or more items in a random order.

c. Sequential list. The sequential list consists of one or more items in a specified order, such as alphabetic, numeric, or alphanumeric.

4.16.6 Figures/illustrations.

4.16.6.1 Figure numbering. Figure numbers should be included on all illustrations except inline graphics (example equation). Figures should be numbered using Arabic numbers sequentially within each work package starting with the Arabic numeral 1. Figures are numbered in the order of reference in the text. Each sheet of a multisheet illustration should, in addition to the figure

number, have a sheet number (e.g., an illustrations with 3 sheets would be numbered: sheet 1 of 3, sheet 2 of 3, sheet 3 of 3).

4.16.6.2 Figure number and title placement. The figure number should precede the figure title and be placed beneath the figure. When inserting a figure into a TM in the horizontal (landscape) position, the page should be rotated 90 degrees clockwise to be read. The preferred method is that the figure number and title is located at the bottom of the page as it exists before rotation. (Refer to Figure 30.) The figure number and title should be separate from the graphic so the text can have the capability of being searched.

4.16.6.3 RPSTL figure numbering. RPSTL TM figures and figures in RPSTL supporting information WPs are sequentially numbered within a RPSTL chapter (not within each WP), using Arabic numerals beginning with 1. Multisheet RPSTL illustration should only be used as specified by the acquiring activity and if used should be numbered as given in paragraph 4.16.6.1.

4.16.6.4 Figure titles.

a. "Figure" is in upper- and lowercase, followed by the figure number, a period, two spaces, and the title. Capitalize the first letter of the first and each major word of the title. Follow the last word of the title with a period. Center figure titles on the graphic image area below the graphic and begin the title on the same line with the figure number.

b. If the title of the figure is too long to fit on one line, align the second line with the first letter of the title.

c. Identify illustrations applicable to one Service in a joint service TM. (For example, **Figure 3. Fuel Indicator (Army Only)**.)

d. Identify illustrations applicable to more than one Service in a joint service TM. (For example, **Figure 3. Fuel Indicator (Army and Air Force Only)**.)

4.16.6.5 Legends. Legends are part of figures and not part of the text.

4.16.7 Warnings, cautions, and notes. A warning identifies clear danger to the person performing the procedure. A caution identifies risk of damage to the equipment. A note is used to highlight essential procedures, conditions, or statements. All warnings, cautions, and notes should immediately precede the procedure/step to which they apply. Order of appearance should be first warnings, then cautions, and lastly notes.

4.16.7.1 Format for warnings, cautions, and notes.

a. The header **WARNING**, **CAUTION**, or **NOTE** should be bold and centered above the appropriate text. Headers should not be numbered. When a warning, caution, or note consists of two or more paragraphs, the header **WARNING**, **CAUTION**, or **NOTE** should not be repeated above each paragraph. Warnings, cautions, and notes on unrelated topics, which pertain to the same procedural step(s) may be grouped under one heading. However, they should be all warnings, or all cautions or all notes. They cannot be mixed.

b. The icons provided in MIL-STD-40051 can be used in conjunction with the **WARNING** or **CAUTION** header. Figure 31 provides an example of the addition of an icon to a safety warning for quick recognition of the hazard by the user. Icons used throughout the manual should also be included in the warning summary at the beginning of the manual along with their definitions. (Refer to Figure 32.)

c. A general description of the warnings should be included in the warning summary provided in the front of the TM. (Refer to Figure 32.). The warning summary is not a word-for-word repetition of all the warnings in the TM and should be limited to alerting the user of the different types of hazards, in general terms, that will be encountered in operating and maintaining the weapon system or equipment covered within the TM.

d. Indent all lines of warnings, cautions, or notes five spaces or characters from both left and right margins.

e. When grouping warnings, cautions, or notes each warning, caution or note should be separated by at least one line and may be bulleted.

f. Layout should not result in warnings, cautions, and notes divided so first lines of text or groups of icons appear on one page and remaining lines or groups of icons on another.

g. Layout should avoid warnings, cautions, and notes being placed on a different page than the paragraph to which they apply.

h. Warnings for hazardous materials/conditions should include guidance pertaining to exposure (i.e., first aid treatment).

4.16.8 Hazardous materials warnings with icons. Procedures prescribed for the operation and maintenance of equipment are consistent with the safety standards established by the Occupational Safety and Health Act (OSHA) Public Law 91-596 and Executive Order 12196. When exposure to hazardous chemicals or other adverse health factors or use of equipment cannot be eliminated, guidance pertaining to the exposure is included in the TM. A list of personnel protective devices should also be included. Hazardous materials warnings may be presented in the standard warning format without an icon (as described above in 4.16.7.1a and b, or in conjunction with an icon, or a combination of icons. The acquiring activity approves the use of icons other than those presented in MIL-STD-40051. Hazards that result from a combination of materials should clearly be identified to indicate that mixing or combining the materials creates the hazard.

4.16.8.1 Format for hazardous materials warnings with icons. Hazardous materials warnings with icons consist of a heading (**WARNING**), the icon(s), and a full description of the hazardous material and the precautions to be taken. They immediately precede the text to which they apply. For commonly used substances only (e.g. dry cleaning solvent, hydraulic fluids, paints, etc.), an abbreviated format may be used for hazardous materials warnings. The abbreviated format consists of the heading (**WARNING**), the icon(s), and the nomenclature (signal word(s)) of the hazardous material. In this case, the full description of the warning is placed in the warning summary at the front of the TM. (Refer to Figure 31.) Icons may be used in technical manuals warnings either singly or in combination. When icons are used in combination, the placement and format should adhere to the methods provided in Figure 31. Refer to MIL-STD-40051 for all approved single hazard icons.

4.16.8.2 Development of icons. Icons are enclosed in a square or rectangular box. The signal word(s) for icons appear outside the box placed to the right or below the icon(s). Type size for signal word(s) should be no smaller than 10-point; 12-point boldface type is recommended. Refer to Figure 31.

4.16.9 Page sizes.

a. Table I lists approved TM page sizes. The maximum printing area includes all printed matter on the page (e.g., text, illustrations, revision bars, TM numbers, page numbers, etc.).

b. Table II lists manual trim sizes, foldout maximum page trim sizes, and foldout maximum printing area for foldout pages. The minimum margin is 1/2 inch top and bottom and 1/2 inch on the side opposite the binding edge. Foldouts should only appear in 8-1/2 by 11 and 11 by 8-1/2 inch size manuals.

TABLE I. TM page sizes (in inches).

Style	Trim Size	Format	Maximum Printing Area
Standard	8-1/2 x 11	Vertical	7 x 10
	11 x 8-1/2	Horizontal	10 x 7
Pocket	4 x 5-1/2	Vertical	3-1/8 x 5
	5-1/2 x 4	Horizontal	5 x 3-1/8
Logbook	6-1/2 x 9-1/2	Vertical	5-1/2 x 8-1/2
Double	17 x 11	Horizontal Only	15-3/4 x 9

TABLE II. Foldout page sizes (in inches).

Manual Trim Size	Foldout Maximum Page Trim Size (Including Apron)	Foldout Maximum Printing Area
8-1/2 X 11	42-1/2 X 11	36 X 10
11 X 8-1/2	11 X 42-1/2	10 X 36

4.16.10 Type sizes and styles. Table III lists preferred type sizes and styles. All type sizes may be plus or minus one point. Slight variations in spacing and leading are permitted. Except for pocket size TMs, which may use 6 point type size, 8 point is the smallest permissible type size.

a. The preferred fonts for Portable Document Format (PDF) files are listed below.

AdobeSansMM
AdobeSerifMM
Courier-Bold
Courier-BoldOblique
CourierCourier-Oblique
Helvetica
Helvetica-Bold
Helvetica-BoldOblique
Helvetica-Oblique
Symbol

Times-Bold
Times-BoldItalic
Times-Italic
Times-Roman
ZapfDingbats

b. The following are True Type fonts for PDF files that may be used, but not preferred.

AllegroBT-Regular
Arial
Arial-Black
Arial-Bold
Arial-BoldItalic
Arial-Italic
ArialNarrow
ArialNarrow-Bold
ArialNarrow-BoldItalic
ArialNarrow-Italic
BenguiatITCbyBT-Bold
BernhardFashionBT-Regular
BernhardModernBT-Bold
BernhardModernBT-BoldItalic
BookAntiqua
BookAntiqua-Bold
BookAntiqua-BoldItalic
BookAntiqua-Italic
BookmanOldStyle
BookmanOldStyle-Bold
BookmanOldStyle-BoldItalic
BookmanOldStyle-Italic
CenturyGothic
CenturyGothic-Bold
CenturyGothic-BoldItalic
CenturyGothic-Italic
CenturySchoolbook
CenturySchoolbook-Bold
CenturySchoolbook-BoldItalic
CenturySchoolbook-Italic
CharlesworthBold
CIA Code 39-Medium-Text-Regular
CIA-POSTNET-Regular
ComicSansMS
ComicSansMS-Bold
DauphinPlain
English111VivaceBT-Regular
Garamond
Garamond-Bold

Garamond-Italic
GoudyHandtooledBT-Regular
GoudyOldStyleBT-Bold
GoudyOldStyleBT-BoldItalic
GoudyOldStyleBT-Italic
GoudyOldStyleBT-Roman
Haettenschweiler
Impact
LetterGothicMT
LetterGothicMT-Bold
LetterGothicMT-BoldOblique
LetterGothicMT-Oblique
Lithograph-Bold
LucidaConsole
LucidaSansUnicode
Staccato222BT-Regular
Swiss911BT-ExtraCompressed
SymbolMT
Tahoma
Tahoma-Bold
TimesCgATT
TimesCgATT-Bold
TimesCgATT-BoldItalic
TimesCgATT-Italic
TimesNewRomanMT-ExtraBold
TimesNewRomanPS-BoldItalicMT
TimesNewRomanPS-BoldMT
TimesNewRomanPS-ItalicMT
TimesNewRomanPSMT
TypoUprightBT-Regular
UniversATT
UniversATT-Bold
UniversATT-BoldItalic
UniversATT-Italic
Verdana
Verdana-Bold
Verdana-BoldItalic
Verdana-Italic
Wingdings-Regular
ZapfElliptical711BT-Bold
ZapfElliptical711BT-BoldItalic
ZapfElliptical711BT-Italic
ZapfElliptical711BT-Roman
ZurichBT-BlackExtended
ZurichBT-RomanExtended

TABLE III. Style, capitalization, leading, and spacing.

Use	Preferred Font Type/Size	Capitalization	Leading	Vertical Spacing
Cover: Security Classification	Sans serif bold 24	Uppercase		
Cover: TM Number	Sans serif bold 24	Uppercase		
Cover: Words “Technical Manual”	Sans serif bold 14	Uppercase		
Cover: Type of Publication	Sans serif bold 14	Uppercase		
Cover: Maintenance Levels	Sans serif bold 14	Uppercase		
Cover: Nomenclature of Equipment	Sans serif bold 18–24	Uppercase		
Cover: Type, Model, Part Number, National Stock Number, EIC, or Subject	Sans serif bold 18–24	Uppercase		
Cover: Subtitle (Volume Title and Number)	Sans serif bold 14	Uppercase		
Cover: Availability Statement, Supersession Notice, Disclosure Notice, Distribution Statement, Export Control Notice, Destruction Notice	Sans serif 8 (for header bold)	Uppercase for header and upper- and lowercase for text		
Cover: Service Nomenclature	Sans serif bold 18	Uppercase		
Cover: Change Number and Date	Sans serif bold 14	Uppercase		
Cover: TM Date	Sans serif bold 18	Uppercase		
Front/Back Matter Headers: Warning Summary, Table of Contents, How to Use This Manual, Index, and Glossary headers.	Sans serif bold 14	Uppercase	6	48 points below TM number; 18 points above text, maintenance task, procedural, or paragraph headers, table, or illustration; 12 points above warning, caution, and note headers
Change Sheet (See change Upper- and 1	Sans serif 10 (See change requirements for bolds)	Upper-and lower case	1	
Title Block Page	Sans serif 10 (See cover requirements for bolds)	Upper-and lower case		
TM Number	Sans serif bold 10	Uppercase		30 points from top of page
Page Number	Sans serif bold 10			30 points from top of page
Change Number	Sans serif bold 10	Uppercase for first letter of Change		30 points from bottom of page
Security Classification	Sans serif bold 14	Uppercase		*30 points from top and bottom of page

TABLE III. Style, capitalization, leading, and spacing.

Use	Preferred Font Type/Size	Capitalization	Leading	Vertical Spacing
Deleted Page Notation	Serif bold 8	Upper- and lowercase	2	30 points from top or bottom of page
Chapter Number and Header	Sans Serif Bold 14	Uppercase	6	Centered left to right and top to bottom on page; 18 points between chapter number and header
Work Package	Sans serif bold 10	Uppercase		30 points from top of page opposite TM Number
Work Package Title Block Horizontal Rules				Top rule 18 points below TM No.; bottom rule 18 points above headers, text, table, or illustration
Work Package Title Block	Sans serif bold 10	Uppercase	2	8 points below WP title block top rule and 8 points above bottom rule
Initial Setup	Title Sans serif bold 10	Uppercase	2	18 points below WP title block bottom rule
Initial Setup Bottom Horizontal Rule				18 points below initial
Maintenance Task Titles and Narrative Text Titles (same level as maintenance titles)	Sans serif bold 10	Uppercase	2	18 points below TM front/back matter header, WP title block or initial setup horizontal bottom rule; 12 points above/below text, table, or illustration,; 12 points above/below warning, caution, and note headers/text
Procedural Text Titles or Paragraph Titles	Sans serif bold 10	All uppercase or uppercase for first letter of each principal word (depending upon emphasis)	2	18 points below TM number, front/back matter header, WP title block or initial setup horizontal bottom rule, maintenance task or narrative text title; 12 points above/below text table, or illustrations; 12 points above/below warning, caution, and note headers/text
Text	Serif 10	Upper and lowercase,	1	18 points below TM header; 12 points above/below table or illustration; 6 points above page no.; 6 points above/below warning, caution, and note headers
Emphasis	Italic bold 10	Upper and lowercase	1	
Formulas and Equations	Italic 10	Upper- and lowercase	1	12 points above/below text, table, or illustration
Figure Number and Title	Serif or italic 10	Uppercase for first letter of each principal word	2	18 points below illustration (within the figure area)
Legend on Illustrations	Sans serif 8	Uppercase for first letter of	1	As required

TABLE III. Style, capitalization, leading, and spacing.

Use	Preferred Font Type/Size	Capitalization	Leading	Vertical Spacing
		first word		
Illustration Callouts	Sans serif 8	Uppercase		As required
Illustration Captions (titles)	Sans serif bold 10	Uppercase	2	18 points below illustration
Table Number and Title	Serif or italic bold 10	Uppercase for first letter of each principal word	2	6 points above title
Column Headers	Serif bold 10	Uppercase	1	
Table Text	Serif 10	Upper- and lowercase	2	
List Headers	Sans serif bold 10	Uppercase for first letter of each principal word	2	12 points above list
Footnotes	Serif 8	Upper- and lowercase	1	18 points below text or table
Warnings, Cautions, and Notes Headers	Sans serif extra bold 12	Uppercase		12 points below text and 6 points above text
RPSTL Parts List, Special Tools List, and Cross-Reference Indexes (National Stock Number Index WP, Part Number Index WP, and Reference Designator Index WP) Column Headers	Sans serif bold 8–10	Uppercase	1	
RPSTL Text	Sans serif 8–10	Upper- and lowercase	1	
Rules	¾ of a point (0.010)	Upper- and lowercase	1	

*NOTE: When a TM is classified, the TM number is 48 points from the top of the page and the page number 48 points from the bottom of the page. All other spacing is adjusted accordingly.

4.16.11 Placement of text and illustrations.

4.16.11.1 Text formatting requirements.

a. Preferred text format for 8-1/2 by 11-inch manuals is single column (page wide), although double column can be used. Both single and double column formatted WPs can be included in a single TM if it would make the data more readable or comprehensible, however, both formats should not be used in the same chapter. Text is single spaced (double spaces between procedural steps).

b. The first line of a paragraph should not be located at the bottom of the page or column. The last line of a paragraph should not be placed at the top of a new page. Do not place the title or header on the last line of a page or column. Widows and orphans are not allowed.

4.16.11.2 Placement of text and related illustrations.

a. Do not place procedural steps in illustrations.

b. Place text and illustrations in such a manner that will conserve space without crowding or degrading the usability or clarity of the material. Whenever possible avoid blank spaces and place illustrations on the same or facing page of associated text. If this is not possible (for example, more than one full-page illustration), place the illustration as close to the related text as possible.

4.16.11.2.1 Placement of text and related illustrations for pocket TMs. Place text for pocket-size manuals on the right-hand pages with supporting illustration on the facing left-hand pages.

4.16.11.3 Text wrapping. Always position text within the required image area. Do not wrap text around illustrations. (Refer to Figure 33.)

4.16.11.4 Illustration placement options. Illustrations are placed either immediately above or below the supporting text or the procedural step or group of steps. Illustrations may float on a page to reduce the white space on a page. If there is not enough room on a page to place a supporting illustration, place the illustration on a facing page, if possible. When developing an XML document instance, use the following words to indicate placement options for digital illustrations: " Above", "Below", "Immediate (default)", "Facing", and "Float". Tag the appropriate position in the text with the correct option. (Refer to Figure 34.)

a. Use the "Above" reference to place the illustration above the referenced text or steps.

b. Use the "Below" reference to place the illustration below the referenced text or steps.

c. Use the "Intermediate (default)" reference to place the illustration immediately below the referenced text or steps.

d. Use the "Facing" reference to place the illustration on the page facing the referenced text or steps.

e. Use the "Float" reference to place the illustration anywhere on the page with the referenced text or steps.

For additional information on the methods used to indicate how to place illustrations in a document instance, refer to MIL-STD-2361.

4.16.11.5 Multiple tasks using same illustrations. When two separate tasks appear on the same page one illustration can be used to support both tasks if space permits.

4.16.11.6 Repeating illustrations. Illustrations are not repeated unless necessary to support multipage descriptions of tasks or to support a different requirement in another part of the TM.

4.17 Style.

4.17.1 Abbreviations and acronyms.

a. At the first use of abbreviations and acronyms, spell out words completely and place the abbreviation or acronym in parentheses immediately after the word(s). When a phrase is abbreviated as an acronym, capitalize the first letter of each word and do not separate letters in the acronym by periods (for example, "Repair Parts and Special Tools List (RPSTL)"). Abbreviations and acronyms accepted as words, such as radar, sonar, laser, etc., need not be spelled out.

b. Do not create new abbreviations or acronyms to duplicate those presently listed in ASME Y14.38. Abbreviations and acronyms may be plural or possessive.

c. Define all nonstandard abbreviations and acronyms (except acronyms for Electrostatic Discharge (ESD) and Hardness-Critical Processes (HCP)) in the list of abbreviations/acronyms paragraph of the general information WP.

d. Spell out abbreviations and acronyms used in tables, but not found in the text or other portion of the TM, in a footnote to the applicable table. Spell out abbreviations and acronyms used in illustrations or figures, but not found in the text or other portion of the TM, in a note on the applicable illustration or figure.

e. When abbreviations or acronyms are used as markings on equipment (placarding), use the same abbreviation or acronym in the TM.

4.17.2 Equations. The use of equations should be held to the minimum use required by the needs of the TM user. (Refer to Figure 35.)

4.17.2.1 Symbols.

a. Any enclosing symbol, such as parentheses ( ) or braces { }, are prepared just wide enough to align with the highest and lowest points of the matter enclosed. Similarly, any dividing or covering element, such as the horizontal division symbol (_____) or the top of the radical sign SQRT √ , is prepared just wide enough to align with the right and left outer edges of the matter divided or covered. For example,

The input impedance is determined by:

$$Z_1' = Z_1 \left[m\,(1-m)\,\frac{(K-1)^2}{K} + 1 \right]$$

The frequency of peak attenuation, f_∞ , is

$$f_\infty = \sqrt{\frac{f_c^2}{1-m^2}} = \frac{(15 \times 10^3)}{1-(0.6)^2} = 18.75 \text{ kHz}$$

b. Use parentheses, brackets, and braces in the following order to set off parts of equation: { [( )] }.

c. Whenever possible, integral signs and summation signs should be of the same height as the mathematical expressions they include.

d. Inferiors (subscripts) precede superiors (exponents) if they appear together; but if either inferior or superior is too long, the two are aligned on the left.

e. Avoid the use of the slant bar.

f. In mathematical equations, use italics for all letter symbols - capitals, lower case, small capitals, and superiors and inferiors (exponents and subscripts).

4.17.2.2 Punctuation.

a. Punctuate mathematical equations in much the same manner as text, but do not use commas to set off nonrestrictive expressions placed in a clear space between lines of text. For example:

Figure 12 shows that the described condition

$$E_c + \frac{E_b}{\mu} = 0$$

exists when the grid of V35 is just sufficiently negative to neutralize the attracting power of the plate at the cathode.

(The commas that would be required in an equivalent nonrestrictive situation in text are omitted.)

b. Use periods after equations at the end of sentences, except where their use would be meaningless or confusing to the TM user. For example,

The equivalent circuit (Refer to Figure 39) shows that range of frequencies

$$\text{Amplification in middle} \Big\} \frac{e_o}{e_s} = \mu\, n$$

range of frequencies

c. Do not introduce an equation with a colon (:) unless the words "as follows," "the following," etc., are also used. For example,

The impedance formed by the reactance in series with resistor R7 is

$$Z = \sqrt{R2 + (\omega L - \frac{1}{\omega c})2}$$

(The terminal period is omitted for clarity.)

4.17.2.3 Dividing an equation.

a. Place an equation too long for one line flush on the left margin. Place the second portion flush on the right margin and balance the two parts as closely as possible. The equation is divided:

(1) Just before an equals sign (=) (Equals signs are clear on the left of other beginning mathematical signs.),

(2) Just before a plus (+) or minus (-) sign separating elements of comparable rank, or,

(3) Just before a multiplication sign (x). This type of multiplication indication should be used whenever line interruption is necessary at a multiplication point.

For example,

$$15r + 16f - 11z + 38f\,(r - 1) + 23fz = 38f\,(r + 14z\,(r^2 + f^2))$$

...in this circuit the plate current is given by the equation

$$= o_1\,(E_g + E_p) + o_2\,(E_g + \frac{E_p}{\mu}) + o_3\,(E_g + \frac{E_p}{\mu})^2$$

b. Do not break a short equation at the end of a line. Begin the equation on the next line or center it on a line by itself.

c. All equations included in a single line must be free from ambiguity.

4.17.2.4 Alignment of equations. In a series of equations, align the major equal signs. For example,

Solution: Since $P = EI$

The line current is $= \frac{P_f}{E_L} = \frac{21{,}400}{2}\,(30) = 93.0$ amp

And the field current is $If = \frac{E_L}{P_f} = \frac{230}{100} = 2.3$ amp

4.17.2.5 Connecting words. Place connecting words of explanation, such as "therefore" and "similarly," flush left either on the same line with the equation or on a separate line.

4.17.2.6 Spacing. Use clear space above and below equations as needed. Center and indent any complex or hard-to-read expressions in a clear space between the lines of text. Start a series of such expressions at the left margin or indent in any consistent manner. Center and indent any important expression, regardless of complexity, to introduce or emphasize it. For example,

The value of the cutoff wavelength c is

$$\lambda c = \left(\frac{90^\circ}{\theta^1 + \theta^2}\right)\lambda co$$

where co = 2a cutoff wavelength without ridges and satisfies the approximate equation

$$\cot \theta^2 + (b1/b2) \cot \theta^1 = 0$$

4.17.2.7 Numbering and referencing to equations. When it is necessary to reference equations in the text, give the equation a reference number. The reference number consists of EQ, followed by an Arabic numeral beginning with 1 within each WP. (For example, EQ 1, EQ 2, etc.) (Refer also to Figure 36.)

5. FRAME-BASED TECHNICAL MANUAL DEVELOPMENT.

5.1 General. This section is intended to provide guidance and further clarify the requirements contained in MIL-STD-40051. The technical content style and format requirements for frame-based TMs should be in accordance with the general requirements contained in MIL-PRF-87268 and the specific requirements provided in MIL-STD-40051. For guidance on preparation of the CD face and flyleaf or mailer, see appendix A. Refer to MIL-PRF-87268 for comprehensibility requirements for IETMs.

5.2 Selective application and tailoring. This section contains guidance that may not be applicable for the preparation of all IETMs. Selective application and tailoring of requirements is the responsibility of the acquiring activity and is accomplished using MIL-STD-40051. If an identifiable, written conflict exists between this handbook and the detailed content standard, the detailed content standard takes precedence.

5.3 Style and format for display of frame-based TMs. The style and format guidance provided in this section is recommended for use when acquiring frame-based TMs for the U.S. Army. XSL style sheets developed in accordance with MIL-STD-2361, interpret the style and format requirements contained in MIL-STD-40051 and this section. Style sheets developed by the TM developer may be used in lieu of XSL Style sheet for displaying IETMs.

5.4 Figures contained in this handbook. The figures provided in this handbook are intended to illustrate style and format only. They should not be used for the interpretation of technical content or detailed maintenance task requirements. Text and language requirements are established by the applicable technical manual content requirements specification and the requirements provided in this section.

5.5 Copyrights, proprietary names, and advertising.

5.5.1 Copyright/copyright credit line. TMs should not contain copyrighted material except as specified in the Federal Acquisition Regulations (FAR) and Defense Federal Acquisition Regulation (DFAR) Supplement. When copyrighted material is included in a TM, the TM developer should obtain prior written permission from the copyright owner or authorized agent for its use. The written permission should contain a statement declaring whether or not a copyright credit line is required.

5.5.2 Proprietary names. Do not use trade names, copyrighted names, or other proprietary names applying exclusively to the product of one company unless the items cannot be adequately described because of the technical involvement, construction, or composition. In such instances, list one, and if possible, several commercial products, followed by the words "or equal." The same applies to manufacturers' part numbers or drawing numbers for minor parts where it is impractical to specify the exact requirements. If possible, define the particular characteristics required for the "or equal" products.

5.5.3 Advertising. Publication material should not contain advertising matter.

5.6 Development of work package technical manuals. The style and format guidance provided in this section is recommended for use when acquiring frame-based IETMs for the U.S. Army. The WP concept is defined as a logical combination of requirements and improved presentation techniques designed to enhance digital display of frame-formatted information. A work package IETM is specifically designed to support individual functional information including troubleshooting and maintenance work tasks for a weapon system or equipment in accordance with the requirements of MIL-STD-40051.

5.6.1 Technical Manual Outline. If required by the acquiring activity, an outline should be developed prior to the start of the frame-based IETM development. Outlines need not be maintained current following initial delivery of the frame-based TM.

5.6.1.1 Initial outline development. The proponent activity should apply the requirement of weapon systems, equipment, or component engineering design to the development of the technical manuals. The guidelines set forth in the approved LMI or maintenance plan dictates the technical content of the IETM. The acquiring activity together with the proponent activity should provide the IETM developer with the filled-in TM content selection matrices provided in MIL-STD-40051. The first step in the development of a frame-based IETM outline is to determine if all descriptive and maintenance information required by the IETM content selection matrices is provided in the single IETM. It may be more logical or effective to provide specific weapon system maintenance information in a separate IETM. For instance, operator data, PMCS data, and DMWR data used in specific environments or sites. Therefore, it may be better to provide this data in separate IETMs. Once a determination is made as to how many IETMs are necessary for the weapon system, a detailed outline can be generated for each using the specific types of functional requirements listed in 5.6.1.2.

5.6.1.2 Outline content and arrangement. An outline should be a detailed breakdown of descriptive, troubleshooting and maintenance data required for each system comprising the weapon system or equipment. The outline should indicate if any information should remain in a paper form. An outline should be developed reflecting each system, subsystem, equipment, or major component, as applicable. For each system, subsystem, equipment, and major component, the following types of data to be developed should be included in the outline.

a. Types of descriptive data (i.e., descriptive, theory of operation, use of controls and indicators, etc.).

b. Procedural tasks necessary to operate the system.

c. Test and troubleshooting.

d. Procedural tasks necessary to perform complete maintenance.

e. Schematics and wiring information required.

f. Supporting information about the IETM or for the weapon system/equipment.

5.7 Development of an XML source file. Once an outline is prepared and all the work packages have been identified, a SGML/XML source file (document instance) should be developed for each WP. (Refer to Figure 26.) The SGML/XML tagged source file is composed of coded ASCII, marked up (tagged) in accordance with the applicable DTD. In order to tag WP text appropriately, the author inserting the tags should be familiar with the DTD or should provide the text file to a person who is experienced with the DTD and who understands the type of documentation being written, especially when content tags are used. A customized template modeled for the applicable DTD may be available or developed to assist the author in creating the document instance. A template can be implemented in a text editor, a WYSIWYG editor, a data base input form, or an XML authoring/composition system. The final deliverable should be an XML source file compliant to MIL-STD-2361 DTD.

5.8 Displaying the TM using a style sheet. A style sheet may be used in lieu of a XSL style sheet to specify the desired appearance of the information content of the document instance. The style sheet provides the same formatting requirements to a presentation system as does an XSL style sheet.

5.9 IETM divisions. The hierarchy of a frame-based TM consists of introductory matter, planning data and a series of work packages that include the types of data listed below. These data types can be used to develop IETMs for Operators through General Support Maintenance, Aviation Unit, and Intermediate Maintenance, Depot Maintenance Work Requirements (DMWRs) and National Maintenance Work Requirements (NMWR). Each of these parts provides instructions on how to develop and structure the required technical information into stand-alone units containing all information essential for directing task performance.

a. Descriptive information and theory of operation.

b. Troubleshooting information.

c. Procedural information (operator and maintenance tasks).

d. Supporting Information.

5.9.1 Introductory matter and planning information. Each frame-based TM should include introductory matter and planning information necessary to supplement the technical content work packages in MIL-STD-40051-1 through MIL-STD-40051-6. Refer to MIL-STD-40051 for detailed requirements for the preparation of introductory matter and planning information. The typical examples provided for introductory matter and planning information (Figures 37 through 41) illustrates a suggested method of displaying the required content information. Depending on the type of presentation system used the required data may be displayed in various formats. It is recommended that the proponent activity be provided with samples of the display formats prior to finalizing the display format of this data. As applicable, the following introductory matter should be included. Refer to MIL-STD-40051 for detailed requirements for the preparation of general information. Figure 38 shows how the introductory frames (b through f below) should be assembled on the CD.

a. IETM installation data.

b. CD content frame.

c. Revision summary frame.

d. Identification information.

e. List of IETM contents.

f. "How To Use This IETM" information.

5.9.1.1 IETM installation data. Information on installing the CD-ROM on the computer and launching the IETM should be prepared. Refer to MIL-STD-40051. Instructions for uninstalling the CD-ROM should also be prepared. The IETM installation data should be included as part of the packaging of the CD on the CD cover or flyleaf. See Appendix A. It should not be included on the CD itself.

5.9.1.2 CD content frame. When more than one IETM is resident on a CD, the first information that appears on the EDS is the CD content frame. This frame provides the IETM number and title of all technical manuals that are contained on the CD. Refer to Figure 37 for a typical example of a CD content frame.

5.9.1.3 Revision summary frame. When a change/revision to a IETM is issued, a revision summary frame should be displayed containing a list of work packages by title that have been revised. For each work package listed, a brief description of the major changes should be provided. Refer to Figure 39 for a typical example of a revision summary frame. The revised work packages listed on the revision summary frame should be linked to the work packages containing the revised data.

5.9.1.4 Identification information (title frame). Identification information should be prepared for each IETM and DMWR/NMWR. Refer to Figure 40 for a typical example of an identification information (title) frame.

5.9.1.5 List of IETM contents. A list of contents should be prepared. The subject matter of the IETM should be in alphabetical order by system/subsystem, equipment. Official nomenclature from the parts information database should be used. Refer to Figure 43 for a typical example of a list of contents frame.

5.9.1.6 "How To Use This IETM" information. Information to familiarize the user with special or unusual features of the IETM should be prepared. Refer to MIL-STD-40051.

5.9.2 Description and theory of operation. Description and theory of operation data is divided into the following specific types of work packages, as applicable to the weapon system/equipment.

a. General information work package.

b. Equipment description and data work package.

c. Theory of operation work package.

5.9.3 Operator instructions. Operator instructions data is divided into the following specific work packages, as applicable to the weapon system/equipment.

a. Description and use of controls and indicators work package.

b. Operation under usual conditions work package(s).

c. Operation under unusual conditions work package(s).

d. Stowage and decal/data plate guide work package.

e. On-vehicle equipment loading plan work package.

5.9.4 Troubleshooting procedures. Troubleshooting procedures data is divided into the following specific work packages, as applicable to the weapon system/equipment.

a. Troubleshooting index work package.

b. Preshop analysis work package (**DMWRs/NMWRs only**).

c. Component checklist work package (**DMWRs/NMWRs only**).

d. Operational checkout and troubleshooting work package.

5.9.5 Maintenance instructions. Maintenance instruction data is divided into the following specific work packages, as applicable to the weapon system/equipment.

a. Service upon receipt work package.

b. Equipment/user fitting instructions work package.

c. Preventive Maintenance Checks and Services (PMCS) work packages.

(1) PMCS introduction work package.

(2) PMCS work package.

d. Preventive maintenance inspections work package (**aircraft only**).

e. Aircraft lubrication instructions work package.

f. Ammunition maintenance work package.

g. Auxiliary equipment maintenance work package.

h. Facilities work package (**DMWRs/NMWRs only**).

i. Task oriented maintenance work packages. Task oriented maintenance work packages contain all authorized maintenance tasks, such as remove, inspect, service, test, install, replace, disassemble, assemble, repair, clean, adjust, align, etc. for the overall weapon system/equipment and each maintainable subsystem, assembly, and component.

j. General maintenance work package.

k. Phased maintenance inspection work package.

l. Preventive maintenance services inspection work package.

m. Overhaul inspection procedure (OIP) work package (**DMWRs/NMWRs only**).

n. Illustrated list of manufactured items work package (-20/AVUM or above only).

o. Torque limits work package (-20/AVUM or above only).

p. Ammunition marking information work package.

q. Foreign ammunition (NATO) work package.

r. Aircraft inventory master guide work package (**aircraft only**).

s. Storage of aircraft work package (**aircraft only**).

t. Weighing and loading work package (**aircraft only**).

u. Depot mobilization requirements work package (**DMWRs/NMWRs only**).

v. Quality Assurance (QA) requirements work package (**DMWRs/NMWRs only**).

w. Wiring diagram work package.

5.9.6 Parts information/repair parts and special tools lists. Parts information or repair parts and special tools lists data is divided into the following specific work packages, as applicable.

a. Introduction work package.

b. Repair parts list work package.

c. Special tools list work package.

d. Cross-reference index work packages.

5.9.6.1 Parts information in work packages. Parts information should be available at the point of the presentation in any work package to which the specific weapon system and equipment replaceable and repairable part is identified. Inclusion of parts information should be used to:

a. Provide any additional parts data required to order the part.

b. Show the relationship of a part to other parts of the system or equipment.

c. Enhance or clarify the supporting operator, descriptive, or theory of operation data.

5.9.6.1.1 Part data useful in Frame-based IETM. Parts data which may be useful to include in a frame-based IETM includes but is not limited to:

a. Name.

b. Part number.

c. Commercial and Government Entity Code (CAGEC).

d. Reference designation.

e. National Stock Number (NSN).

f. Next higher assembly.

g. Source, Maintenance, and Recoverability (SMR).

h. Quantity.

i. Additional parts information.

(1) HCP item identification.

(2) Electrostatic discharge sensitive parts (ESD).

(3) Flight safety critical aircraft parts (FSCAP).

(4) Mandatory replacement parts.

(5) Durable and expendable items.

(6) Components of end item (COEI).

(7) Special tools and test equipment.

j. Illustration/Graphic.

5.9.7 Supporting information. Supporting information data is divided into the following specific work packages, as applicable to the weapon system/equipment. The supporting information work packages listed below were formerly referred to as appendices, however, with the creation of the work package concept, it is no longer necessary to title this information as appendices. Necessary supporting data for a specific weapon system, equipment, or component, that does not fall under the supporting information categories listed below, may be placed into as many additional work packages as required.

a. References work package.

b. Maintenance allocation chart (MAC) work package.

c. RPSTL work package.

d. Components of end item (COEI) and basic issue items (BII) lists work package.

e. Additional authorization list (AAL) work package.

f. Expendable and durable items list work package.

g. Tool identification list work package.

h. Mandatory replacement parts work package.

i. Critical safety items (CSI) and flight safety critical aircraft parts (FSCAP) work package.

j. Support items work package.

k. Additional work packages.

5.9.8 Work package content. Work packages may contain identification information, initial setups, descriptive information, and operating, troubleshooting, and maintenance tasks. These data types can be further divided into paragraphs, procedural steps, tables, lists, warnings, cautions and notes, and supporting graphics. Parts information should be accessible in any of the data types, as necessary. Refer to MIL-STD-40051-1 through MIL-STD-40051-6 for the specific content requirements for each of the functional work package types (i.e., description information, operator's instructions, troubleshooting, and maintenance). Typical examples for descriptive and task oriented WPs, including troubleshooting and parts information are provided in Figures 44 through 47. These figures provide a suggested method of displaying the required content information. Depending on the type of presentation system used, the required data may be displayed in various formats. It is recommended that the proponent activity be provided with samples of the display formats prior to finalizing the display format of this data.

5.9.9 Development of individual work packages. Ideally, each WP in a manual will be an independent, stand alone data unit. It may be required to group some information or maintenance tasks in one work package and divide others into several WPs. Division or selection of coverage will depend on various factors. These factors may include but are not limited to:

a. A specific work package that is required by MIL-STD-40051-1 through MIL-STD-40051-6.

b. A specific work package that is required by the IETM content selection matrix provided by the contracting activity (Refer to MIL-STD-40051).

c. A WP may be determined by the operational modes, complexity of the troubleshooting or maintenance action, or level(s) of troubleshooting or maintenance covered. Separate WPs may be developed for the same equipment or component for different maintenance levels (e.g., a WP for operator's maintenance and a WP for direct support maintenance for the same item of equipment).

d. Two or more WPs for an identical troubleshooting or maintenance task may be required because the task is performed differently due to differences in configurations.

e. Separate WPs due to different initial setup information for a set of maintenance tasks covering a repairable component. If the support equipment, tools, materials and personnel used to perform removal and installation is very different than the support equipment, tools, materials and personnel used to perform disassembly and reassembly for the same system or component, it may be better to separate this information into two WPs.

5.10 Format.

5.10.1 Font size and style. Font style, size, and spacing should be in accordance with MIL-PRF-87268.

5.10.2 Use of alerts. An alert is any message, communication, notice, or output which requires manual acknowledgment from the user of the IETM. Alert messages should be displayed within a border. Preferred styles and formats of alert borders are provided in Figure 48. Alerts should be used to convey the following types of information, such as:

a. Warnings, cautions, and notes.

b. Hardness-critical processes.

c. Electrostatic discharge (ESD) sensitive parts.

d. Flight safety critical aircraft parts (FSCAP).

5.10.3 Warnings, cautions, and notes.

5.10.3.1 Use and placement.

a. A warning identifies clear danger to the person doing that procedure. A caution identifies risk of damage to the equipment. A note is used to highlight essential procedures, conditions, or statements. All warnings, cautions, and notes should immediately precede the procedure/step to which they apply. Order of appearance should be first warnings, then cautions, and lastly notes.

b. The header **WARNING**, **CAUTION**, or **NOTE** should be bold and centered above the appropriate text. Headers should not be numbered. When a warning, caution, or note consists of two or more paragraphs, the header **WARNING**, **CAUTION**, or **NOTE** should not be repeated above each paragraph. Warnings, cautions, and notes on unrelated topics, which pertain to the same procedural step(s) may be grouped under one heading. However, they should be all warnings, or all cautions or all notes. They cannot be mixed.

c. When warnings or cautions exist in separate categories for the same set of technical information, they should be successively displayed in decreasing order of severity: Warnings first, followed by cautions. Warnings or cautions in the same category should be successively displayed. However, there should be no requirement to determine an order of importance within the same category. When related warnings or cautions of the same category are for the same block of

technical information, it is permissible to group them within a common alert border but they should be visually distinct. In such a case, the title indicates the combined danger.

d. When grouping warnings, cautions, or notes each warning, caution or note should be separated by at least one line and may be bulleted.

e. Layout should not result in warnings, cautions, and notes divided so first lines of text or groups of icons appear on one page and remaining lines or groups of icons on another.

f. Layout should avoid warnings, cautions, and notes being placed on a different page than the paragraph to which they apply.

g. Warnings for hazardous materials/conditions should include guidance pertaining to exposure (i.e., first aid treatment).

5.10.3.1.1 Display requirements for warnings, cautions, and notes. Warnings, cautions, and notes should be prominently displayed and treated as an alert. The warning, caution, and note alert should stay active as long as the condition exists. The alert remains displayed until the user manually acknowledges the alert. The warnings and cautions are contained within a border. Preferred styles and formats for borders are provided in Figure 48.

5.10.3.2 Hazardous material warnings. Procedures prescribed for the operation and maintenance of equipment are consistent with the safety standards established by the Occupational Safety and Health Act (OSHA) Public Law 91-596 and Executive Order 12196. When exposure to hazardous chemicals or other adverse health factors or use of equipment cannot be eliminated, guidance pertaining to the exposure is included in the TM. A list of personnel protective devices should also be included. Hazardous materials warnings are presented in the standard warning format without an icon (as described above in 5.10.3.1.1). Hazards that result from a combination of materials should clearly be identified to indicate that mixing or combining the materials creates the hazard.

5.10.4 Work packages. Each work package includes the work package identification information described in MIL-STD-40051-1 through MIL-STD-40051-6, as applicable. Work package identification information should be displayed in the title bar area of the user's EDS.

5.10.4.1 Work package initial setup information. Initial setup information (Refer to Figure 49) should be included in each work package immediately following the WP identification information and prior to the initial task step. It provides the maintenance technician with general information, equipment, parts, material, and authorized personnel required to perform and complete all the maintenance tasks included in the work package. For initial setup information requirements for specific types of work packages, refer to MIL-STD-40051.

5.10.4.2 Work package identification number. For data base retrieval purposes, a unique number should be assigned to each work package. This WP identification number should not appear when viewed on the user's EDS display page. Identification numbers should be assigned by the acquiring activity in accordance with the requirements contained in MIL-STD-40051.

5.10.4.3 Maintenance tasks and descriptive information. Procedural maintenance tasks or descriptive information contained in a WP should have a title. The title should be identical to the title in the list of contents. The words "END OF WORK PACKAGE" should be placed below the last data item (i.e., text, illustration, etc.) at the end of any WP containing procedural tasks.

5.10.5 Paragraphs.

5.10.5.1 Paragraph numbering. Paragraphs within a WP should be unnumbered.

5.10.5.2 Paragraph titles. Paragraphs should have titles. Subparagraphs may have titles. If titled, the title should begin at the left margin. Paragraph titles should be in capital letters.

5.10.6 Procedural steps. Procedural steps should be used to present detailed step-by-step instructions for performing an operational or maintenance task. Subordinate steps may be used to differentiate an expert step from a novice step. Unless otherwise authorized by the acquiring activity, only one expert step at a time should appear on the user's EDS. When subordinate steps are used in combination with an expert step, the subordinate steps should appear indented under the expert step on the user's EDS. Novice subordinate steps should be scrollable on the user's EDS.

5.10.6.1 Procedural step numbering. Procedural steps should be numbered using the following guidelines:

a. Procedural steps should be numbered consecutively with Arabic numerals.

b. If subordination is used to indicate novice steps, substep letters (a, b, c, etc.) should be used.

5.10.6.2 Procedural step titles. Procedural steps should not have titles.

5.10.7 Tables and lists.

5.10.7.1 Table locations. Placement of tables should be in accordance with MIL-PRF-87268.

5.10.7.2 Table numbering. Tables should be numbered.

5.10.7.3 Table titles. Tables should have a title. The column heading should appear above the table. The table title should also appear in the title bar. If a table is scrollable, the table title should have a "sticky" column heading.

5.10.7.4 Table format. Tables designated as "standard information" tables in MIL-STD-40051 have no deviations to the number of columns and the titles in the column headings. The format and table headings are automatically generated by the applicable DTD and style sheet used for the functional information.

5.10.7.5 Footnotes to tables. There should be no footnotes in tables. Footnote data should be linked using a hotspot technique.

5.10.7.6 Lists. Lists may be used in lieu of tables, when appropriate. Three types of lists are identified below. Lists may be unnumbered, numbered sequentially, or lettered alphabetically. They may have an optional title.

a. Definition list. The definition list should consist of the term and the definition. The definition list may have the headers, "Term" and Definition" above the appropriate sections of the list. Refer to MIL-STD-2361 or MIL-PRF-28001 for more information on the development of lists.

b. Random list. The random list should consist of one or more items in a random order.

c. Sequential list. The sequential list should consist of one or more items in a specified order, such as alphabetic, numeric, or alphanumeric.

5.10.8 Display of text. All descriptive information and task text should be displayed in accordance with MIL-PRF-87268. Refer to Figures 44 through 46 for typical examples of screen text.

5.10.9 Display of illustrations. Illustrations should be displayed on the user's EDS in accordance with MIL-PRF-87268. Refer to Figures 45 and 46 for typical examples of screen displayed illustrations.

5.10.10 Title bar. The title bar area of the user's EDS should contain the official title of the information. The title should be repeated and displayed in the client text area. The title should be the same as appears in the list of contents (Refer to Figure 43).

5.11 Style.

5.11.1 Abbreviations and acronyms. Acronyms, abbreviations, and unusual terms may be used in any WP text, when applicable. It is not necessary to spell out the words completely after the first use of an acronym or abbreviation. An acronyms, abbreviations, and uncommon terms work package should be developed explaining all acronyms, abbreviations, and unusual terms used in the IETM. Refer to MIL-STD-40051.

5.11.2 Symbols.

5.11.2.1 General information for symbols. All nonstandard symbols should be defined in the WP of nonstandard symbols (Refer to MIL-STD-40051). Where possible, new symbols should not duplicate those presently listed in MIL-STD-17.

5.11.2.2 Metric symbols. Metric symbols should be in accordance with IEEE 945-1984.

5.11.3 Nuclear hardness (hardness-critical processes) marking. All Hardness-Critical Processes should be preceded with the alert acronym "HCP". Use of the acronym is as follows:

a. When the entire task and all steps relate to establishing nuclear hardness, the HCP alert should precede the first step of the task.

b. When the entire task and steps do not contribute to establishing nuclear hardness, only those, which do contribute should be annotated with the HCP alert.

c. Operating or maintenance actions which could degrade hardness, but which are not directly involved in establishing nuclear hardness, should not be annotated with the acronym, but should be preceded by a caution.

5.11.4 Electrostatic Discharge (ESD) sensitive marking.

a. All steps addressing handling or maintenance, which could damage ESD sensitive parts should be preceded by the alert acronym "ESD".

b. Handling or maintenance actions which could damage ESD sensitive parts, but which are not directly related to handling or maintenance of ESD sensitive parts, should not be annotated with the acronym ESD, but should be preceded by a caution.

c. Mark figures, drawings, and schematics with the ESD acronym in accordance with MIL-STD-1686.

5.11.5 Quality Assurance (QA) symbol. To indicate depot and aviation maintenance procedures, which have a major quality assurance effect, a statement such as "QA check" should be used following the procedure or step.

5.11.6 Security classification, emergency page and protective markings. When specified by the acquiring activity, a classified IETM should be prepared. The security classification markings for classified IETMs, should be identified in accordance with DOD 5200.1-R and DOD 5220.22-M,

Executive Order 12958 and MIL-PRF-87268. For guidance on classification and handling restrictive markings on Compact Disk-Read Only Memory (CD-ROM), refer to MIL-HDBK-9660.

5.11.7 Referencing.

5.11.7.1 Other documents. When authorized by the acquiring activity, reference should be made only to other documents available and authorized to the user. Reference should be made by publication number. References to pending publication actions should not be made.

5.11.7.2 Government specifications and standards. When authorized by the acquiring activity, reference should be made to the basic publication number for Government specifications and standards.

5.11.7.3 Within the IETM. When it becomes necessary to reference to other work packages, descriptive information, maintenance tasks, or other data within the same IETM, it should be linked and referenced by title or appropriate text. The title should be the same used in the list of contents.

5.11.7.4 Equipment, components, and parts. Reference to parts of the equipment and to equipment components may be by nomenclature, model, type, reference designator. The referenced items may be linked to a graphic for identification and location.

5.11.7.5 National Stock Numbers (NSNs) and Part Numbers (P/Ns). NSNs and part numbers should not be included in any text, tables, or illustration contained in a work package. NSN and part number information for all equipment, components and parts should be accessible from the parts database at any point in the presentation of WP text, tables and illustrations, when necessary, for the purpose of identification and parts ordering.

5.11.7.6 Equipment panel markings (placarding). Reference should be made to panel markings and switch positions exactly as marked on the equipment. However, symbols on panel markings should be spelled out when they cannot be produced by the software, composing equipment, or printers used in producing the manual, such as the symbol for ohm, infinity, etc.

5.11.7.7 Metric and U.S. standard measurements. Unless specified otherwise by the acquiring activity, all measurements should be expressed in both U.S. standard units (e.g., ounces, pounds, gallons, inches, feet, knots, miles, etc.) and metric units. U.S. standard measurements should be followed by the metric conversion in parentheses unless the equipment, instrument, or tool, etc., is calibrated in metric units. In that case, metric units should be first, followed by the U.S. standard units. (For example, "169.5 Nm (125 lb-ft)".)

5.11.7.8 Temperature. Reference should be made to temperature readings as calibrated on the equipment. If other than Fahrenheit, the equivalent in Fahrenheit should follow in parentheses. General temperature references, such as room temperature, should be given in degrees Fahrenheit (for example, 78°F).

5.11.7.9 Other TMs/IETMs. When it becomes necessary to reference to other work packages, descriptive information, maintenance tasks, or other data contained in another TM/IETM, it should be by the TM number, as a minimum. The reference should be linked when the referenced data is on the same CD or within the CD set for the system.

5.11.7.10 Tables. Tables should be linked to the appropriate text and displayed when they do not already appear in the graphics client area on the user's EDS.

5.11.7.11 Figures. Figures should be linked to the appropriate text or index number and displayed when they do not already appear in the graphics client area on the user's EDS.

5.11.7.12 Index numbers. Unless specified otherwise by the acquiring activity, index numbers should be used in text to identify items and parts on illustrations. For example,

> "Remove safety disc (figure 1, item 3) and safety disc washer (figure 1, item 4) from valve body (figure 1, item 2)."

5.11.7.13 Items on diagrams. Reference should be made to parts on diagrams by enough of their description or reference designator to identify the item (for example, resistor A6R11).

5.11.8 Equations. The use of equations should be held to the minimum use required by the needs of the TM user.

5.11.9 Nomenclature.

5.11.9.1 Nomenclature consistency and applicability. Nomenclature, other terms, and names should be consistent within a manual and other directly related manuals. Statements that explain applicability for individual items of equipment should use specific serial numbers, block designations, model designations, or similar identification. Such terms as "on later equipment" and "on early serial numbers" should not be used.

5.11.9.2 Official/approved nomenclature. Unless specified otherwise by the acquiring activity, only approved names and official nomenclature should be used. (Official nomenclature should be the nomenclature used in the parts information database.) If unofficial nomenclature (common name) is approved, the common name should be included in the parts information. Approved nomenclature should be used wherever the use of a common name might be ambiguous.

5.11.9.3 Military terms. Military terms used should be in accordance with Joint Pub 1-02, or any approved dictionary or glossary of Army military terms.

5.11.9.4 Automatic electronic test and checkout terminology. Terms used for automatic electronic test and checkout should be in accordance with MIL-STD-1309.

5.11.10 Multimedia presentation. Audio, video, and animation techniques should only be used in an IETM when it results in enhancing the presentation of the information or makes the procedures more effective. Every instance of use should be discussed with and approved by the acquiring activity before any audio, video, or animation presentation is included in an IETM. Multimedia standards to be used for presentation techniques should be specified by the acquiring activity.

6. GRAPHICS REQUIREMENTS.

6.1 Illustration preparation.

6.1.1 Illustration style and format preparation. Plan, lay out, and size illustrations to effectively portray the required details, and prepare to the latest technical data.

6.1.2 Illustration detail and size.

6.1.2.1 Illustration detail. Style and techniques should be of a quality that will produce illustrations, which will clearly, adequately, and economically portray the information to be illustrated. The amount of detail should be limited to that required to support the content of the illustration.

a. When text alone is not adequate, supplement the text by using illustrations for depicting procedures such as disassembly, assembly, removal, and installation. In addition, illustrations are used to describe an item, process, or procedure; call attention to details; and provide identification of assemblies, parts, and tools, etc. Number or nomenclature callouts can be used to key important items in the illustration to the text.

b. Present illustration views so that the TM user can best understand the text being supplemented. In most instances this should be as the user would view the item in the performance of the associated task. In some cases, however, depicting the procedure or location of parts and controls described in a procedure would better serve the user if shown as viewed from a different position.

6.1.2.2 Scale. Prepare illustrations to the smallest scale possible to be consistent with effective use of space and with all essential details legible. For page-based TMs, make the sizes of the illustrations the same size as the areas they will occupy on the TM pages. For additional scale requirements for IETMs, refer to MIL-PRF-87268.

6.1.2.3 Graphic size options. Size options for graphics are full page, page, 1/4 page, and 1/8 page. Determine the size of the graphic by measuring from the top of the graphic to the bottom. More than one illustration may be placed in the designated graphic area. (Refer to Figure 50.)

6.1.2.4 Letter size. For page-based TMs, the scale of text on illustrations should provide for a minimum final letter size, when printed, of 8 points. For IETMs, the scale of text on illustrations should be in accordance with MIL-PRF-87268.

6.1.2.5 Electrostatic discharge (ESD) sensitive acronym. Mark figures, drawings, and schematics with the ESD acronym in accordance with MIL-STD-1686 and MIL-STD-40051.

6.2 Types of graphics. As applicable, the following types of graphics should be used in the preparation of both paged-based TMs and IETMs. Preferred format of these graphics and typical examples are provided in Appendix B.

a. Line drawings.

b. Photographs.

c. Engineering drawings.

d. Diagrams.

e. Charts and graphs.

f. Tools and test equipment illustrations.

7. CHANGES/REVISIONS.

7.1 Changes/revisions for page-based TMs. There are two types of updates that can be prepared for a TM: a change and a complete revision. The type of update required is based on the percentage of change required and the reason for the update; such as, change in the equipment configuration, excess number of changes outstanding, major inadequacies, cost considerations, etc. The acquiring activity will determine when a change or revision is required.

7.1.1 Changes. A change is used to incorporate appropriate new information (for example, MAC changes, Modification Work Orders (MWOs), engineering drawing changes, DA Forms 2028, etc.)

into the basic TM, or clarifies, corrects, or improves existing information in the basic TM. When a change to a TM is required, the change should be written in the same style and format as the basic manual.

7.1.1.1 Change format. Changes consist of a change transmittal page, list of effective pages, and applicable updated pages or work packages.

a. Each change to a TM is numbered in sequence beginning with 1.

b. Front matter, work package, and rear matter change pages should conform to the style and format of the basic TM and should incorporate all approved information.

c. The list of effective pages should be prepared in accordance with Appendix C.

7.1.1.2 Changed work packages. When updates to a work package are made, the entire work package should be revised and reissued. In a WP change, WP pages, figures, tables, index numbers, etc., should be renumbered, as necessary, to eliminate all number suffixes and alpha characters and to establish correct sequence. All former change numbers (and change dates, if any) should be removed from pages. All partial pages and change symbols should be eliminated. All pages of a changed WP should include the applicable change number located to the right of the page number. The first page of the work package should contain the change date. (Refer to Figure 16.) Although the WP sequence number is not a permanent number, once assigned, it should not be changed unless the acquiring activity directs that the entire TM or series of TMs be reissued.

7.1.1.3 Additional WPs for a change. When it is necessary to develop new work packages during a change cycle, new WP sequence numbers can be assigned using the last two digits of the existing WP sequence numbers in the basic manual. The last two digits of the WP sequence number are used for expansion. For example, if it is necessary to insert several new WPs between WP 0045 00 and WP 0046 00 of the basic manual, the new work packages would be assigned as WP 0045 01, WP 0045 02, WP 0045 03, etc.

7.1.1.4 Changed front and rear matter pages. When updates to the front and rear matter of a TM are required, only the effected pages are changed and reissued. Copy is prepared for both sides of the printed page on which an update is made, even when an update is made to one side only.

7.1.1.5 Change symbols. The use and insertion of change symbols to identify technical updates for text, tables, and illustrations is covered in detail in MIL-STD-40051. (Refer to Figures 16 and 51.)

7.1.2 Complete revisions. A complete revision requires rewrite and reorganization of the technical content of the data. All existing changes to the basic manual should be merged. All change dates and change symbols should be removed and, if necessary, all work packages should be assigned new WP sequence numbers in consecutive order. If the last two digits of a WP sequence number were used for expansion during a previous change cycle, they should be recycled to 00. (i.e., if WP 0034 01 and WP 0034 02 were inserted between WP 0034 00 and WP 0035 00, WP 0034 01 should be renumbered 0035 00, WP 0034 02 should be renumbered 0036 00 and WP 0035 00 should be renumbered 0037 00). A list of effective pages should be included/updated. The list of effective pages should be prepared in accordance with Appendix C.

7.1.2.1 Supersedure notice. When the TM under preparation supersedes other TMs or portions of TMs, place a supersedure notice, as provided by the acquiring activity, on the front cover. Use the applicable portions of the following supersedure notice: " This (manual) supersedes (insert

applicable manual or portions there of) dated (insert date of superseded document) and all changes".

7.2 Revisions for frame-based TMs.

a. Each revision to an IETM should be identified by a revision date.

b. When updates to an IETM are made, the entire IETM should be revised and reissued.

c. When an IETM is revised and reissued, revision summary information should be included (Refer to 5.11.1.1.3).

7.3 Revision symbols. Revision symbols should be inserted to identify technical updates in text, illustrations and tables.

a. Updates to the text and tables should be indicated by a vertical line (revision bar) opposite the updated, deleted, or added text (except as noted below). If the composing equipment is incapable of producing a vertical line, another symbol may be used as specified by the acquiring activity (for example, a number sign "#;" plus sign "+;" black circle; black square; the letters "C," "R," or "X").

b. When tables are updated or added, the revision bar should also be placed to the left of the table title.

c. Revision symbols from a previous revision should be deleted when a information is subsequently updated. Symbols should show current updates only.

d. Revision symbols are not required for correction of minor inaccuracies, such as spelling, punctuation, relocation of material, renumbering, etc., unless such correction changes the meaning of the information.

e. A revision symbol such as a "C" should be included for each revised work package in the list of contents.

f. A revision symbol such as a "C" should appear with the work package title in the title bar area.

7.3.1 Revision symbols for illustrations. Unless specified otherwise by the acquiring activity, a miniature pointing hand should be used for illustrations (other than diagrams and schematics) to highlight the area containing the revised information.

a. Revisions confined to the same general area should be indicated only once on the illustration.

b. A vertical line next to revised callouts on illustrations may be used in lieu of a pointing hand.

c. A vertical line next to revised material may be used on a chart or graph.

d. As specified by the acquiring activity, screens (shading), screened (shaded) boxes, or miniature pointing hands should be used to highlight updated areas of diagrams and schematics.

e. When a figure has a figure title, a vertical line should be placed to the left of the figure number title.

8. SECURITY CLASSIFICATION AND HANDLING RESTRICTIVE MARKINGS.

8.1 General. When preparation of a classified technical manual (TM) is specified by the acquiring activity, the security classification markings should be identified in accordance with DoD 5200.1-R, DoD 5220.22-M, and Executive Order 12958. Specific markings for page-based classified manuals, chapters, work packages, paragraphs, tables and illustrations are as prescribed in paragraphs 8.2 through 8.10. For guidance on specific markings for classified frame-based manuals, refer to MIL-PRF-87268 and the acquiring activity. For guidance on security classification and handling restrictive markings on Compact Disk-Read Only Memory (CD-ROM), refer to MIL-HDBK-9660.

8.2 Overall classification. (Refer to Figures 52 and 53). The overall classification assigned to all TMs agrees with the highest classification assigned to any page therein. Place the overall classification assigned to a TM at the top and bottom of the front cover, title block page and rear cover. When this results in a cover or title block page being marked with a higher classification than that assigned to the contents of that page, provide an explanation of the higher classification on that page under the bottom classification marking. For example,

CONFIDENTIAL	or	SECRET
(This page is UNCLASSIFIED)		(This page is CONFIDENTIAL)

8.3 Classification of table of contents. (Refer to Figure 54.) Every effort should be made to use unclassified captions/titles in the table of contents. When classified captions/titles are used, place the security classification of the caption/title preceding the caption/title. The classification marking is for the caption/title only and does not indicate classification of the content of work packages, tables, or illustrations. Do not mark unclassified titles.

8.4 Classification of chapter. (Refer to Figure 55.) The overall classification assigned to a chapter agrees with the highest classification assigned to any element therein. Place the overall classification assigned to a chapter at the top and bottom of the chapter title page. When the chapter title page is marked with a higher classification than that assigned to its contents, provide an explanation on that page beneath the bottom classification marking. For example,

CONFIDENTIAL	or	SECRET
(This page is UNCLASSIFIED)		(This page is CONFIDENTIAL)

If a chapter or a classified document does not contain any classified information, a statement may be placed under the chapter heading as follows: "THIS CHAPTER IS UNCLASSIFIED". Also, if a chapter contains classified information at one security level and can be clearly identified, an explanation may be placed under the chapter heading. For example, "THIS CHAPTER IS CLASSIFIED SECRET only because the range of the TOW missile is discussed throughout. It contains no other classified information." With situations of this type, only page marking at the top and bottom of each page is needed for that portion of the document.

8.5 Classification of work packages. (Refer to Figure 56.) Each work package is considered a stand alone unit and for classification purposes is equivalent to a portion of the publication. Mark each page of the work package with the highest classification required for any element of the work package. When any page is marked with a higher classification than that assigned to its contents, provide an explanation on that page beneath the bottom classification marking. For example,

CONFIDENTIAL	or	SECRET
(This page is UNCLASSIFIED)		(This page is CONFIDENTIAL)

8.6 Classification of pages. (Refer to Figure 57.) Mark each page (other than cover, title block page, chapter title page and work package pages) according to its highest content. When classification of two pages of one sheet (two pages back to back) differs, use the higher classification on both pages. When two pages of one sheet are unclassified, mark each page unclassified. When any page is marked with a higher classification than that assigned to its contents, explain the higher classification on that page beneath the bottom classification marking; for example,

CONFIDENTIAL	or	SECRET
(This page is UNCLASSIFIED)		(This page is CONFIDENTIAL)

If a blank page backs up a classified page, show the classification of the classified page on the blank page and explain the higher classification as described above. Blank pages backing up unclassified pages need not be marked. If the classification shown on the last page of a publication is not the same as that shown on the front cover, then add a blank sheet to the back of the publication showing the same classification as the front cover. The last page, if blank, or rear cover of the publication reflects the same classification as the front cover (i.e. the highest classification of the publication).

8.7 Paragraph and table markings. (Refer to Figures 58 and 59.) Mark all paragraphs, subparagraphs, steps and tables to show the level of classification contained in or revealed by it, or that it is unclassified. Classification levels are shown by the appropriate classification symbols immediately before the beginning of a paragraph or immediately following a table number or procedural step, letter or number. Use the following parenthetical symbols: (TS) for Top Secret, (S) for Secret, (C) for Confidential, and (U) for Unclassified. In marking warnings, cautions, or notes, place the appropriate marking immediately preceding and to the left of the warnings, cautions, or notes involved. The abbreviated classification markings are for internal content use only, not for overall marking of pages. These instructions apply to all new and changed/revised publications.

8.8 Illustration markings. (Refer to Figure 60.) Mark illustrations, photographs, figures, graphs, drawings, charts and similar portions of classified documents to show their classification or unclassified status. Ensure that markings stand out and are placed within the illustration. Mark captions, if used, on the basis of their content alone by placing the symbol "(TS)", "(S)", "(C)", or "(U)" immediately before the caption.

8.9 Downgrading/Declassification.

8.9.1 Downgrading/declassification notice. (Refer to Figures 61 and 62.) The downgrading/ declassification notice on the cover or title block page should be in accordance with DoD 5200.1-R. (Date of classification guide not required in technical publications). The "Classified By" line should not have a calendar date but should contain the phrase "Originating Agency' s Determination Required (OADR)".

8.9.2 Downgrading procedures. Classifications are lined through on the title block page when a publication's classification is changed with a new classification, if any, marked immediately below

the old, and a "Classification changed to" notice should appear in the upper left corner. The notice should remain until the first following revision, at which time the new classification should be indicated. If classification of a secret publication is downgraded (with a portion of the secret material becoming confidential and a portion of the remainder becoming unclassified), or if portions of a confidential publication are downgraded, all affected pages should be prepared showing new classification, if any, for each paragraph, illustration, etc., and for the page itself. The old classification, lined out, should not be shown. If the only downgrading action is that all secret material has become confidential, and no secret or confidential material has become unclassified, changing the title block page (and explaining this with a downgrading note thereon) is satisfactory and each classified page need not be changed. (Refer to Figure 61). Title page and list of effective pages are the only pages required to be printed if the only downgrading action is that all secret material has become confidential; however, the activity acquiring that update should take immediate action to change all secret markings to confidential on the final reproducible copy.

8.9.3 Declassification procedures. All security markings, disclosure notice, and nomenclature classification should be lined through when a publication's classification is canceled, and a "Classification changed to" notice should appear in the upper left corner. Provide a statement below the notice to the effect that classification on all pages of the publication should be lined out by personnel responsible for maintaining the publication in current status. The notice should remain until the first following revision, at which time the publication should be issued unclassified. If classification of a publication is canceled, classified pages should not be reprepared unless there are technical changes to such pages, or unless a revision of the publication is warranted. If a revision is warranted, classification should be removed from all paragraphs, illustrations, tables, and pages. If the only update to the publication is the cancellation action, a revised cover and title block page and list of effective pages/work packages will suffice. These markings should remain on the title block page until issuance of a complete revision. (Refer to Figure 62). Title block page and list of effective pages/work packages are the only pages required to be printed to cancel a publication classification; however, the activity that prepared that update should take immediate action to remove all classification markings, except the title block page, from the final reproducible copy.

8.10 Reprinting classified publications. Publications are to be reprinted with existing classification markings unless they have been declassified/downgraded. Whenever reprint action is required on a technical publication that has been declassified/downgraded, every effort should be made to reprint the publication so that all required remarking has been accomplished. If the technical publication has been declassified, markings on all pages except title block page should be opaqued or taped out before the reprint action. If a publication has been downgraded from secret to confidential and final reproducible copy is available, the secret pages should be prepared showing the confidential markings so that new negatives can be prepared for these pages. If final reproducible copy is not available, the publication may be reprinted with the security markings on them, with the cover/title block page noting that "Secret" classification of all pages in this publication should be lined out and marked "Confidential" by personnel responsible for maintaining the publication in current status.

9. NOTES.

9.1 Intended use. Technical manuals prepared in accordance with the information and guidance contained in this handbook are used to support operation and maintenance of various types of equipment and weapons systems within the Department of the Army.

9.2 Subject term (key word) listing. The following terms are to be used to identify the MIL-STD-1222 document during retrieval searches.

a. Digitized artwork.

b. Graphics.

c. Hazardous materials warnings.

d. Icons.

e. Illustrations.

f. Interactive electronic technical manual (IETM).

g. Introductory material.

h. Maintenance instructions.

i. Operator instructions.

j. Reading grade level.

k. Repair parts and special tools list (RPSTL).

l. Revisions.

m. Supporting information.

n. Theory of operation.

o. Troubleshooting information.

p. Security classification.

TM 11-6625-3178-14 **0001 00**

OPERATOR, UNIT, DIRECT AND GENERAL SUPPORT MAINTENANCE
TRANSPORTATION ELECTRONIC SHOP
NSN 4940 01 293 5615, EIC XXX
GENERAL INFORMATION

SCOPE

This technical manual contains instructions for operation, checks, and adjustments, and corrective maintenance for the AN/TSM-191(V)* Transportable Electronic Shop (shelter). The shelter provides a field level direct maintenance level, protected test facility which is used to support and improve the operational readiness of Army electronic and avionic systems.

Type of Manual: Operator, Unit, Direct, and General Support Maintenance.

Model Number and Equipment Names: AN/TSM-191(V)2 Transportable Electronic Shop, AN/TSM-191(V)2 Transportable Electronic Shop, AN/TSM-191(V)2 Transportable Electronic Shop.

Purpose of Equipment: The shelter provides a field level direct support maintenance level, protected test facility which is used to support and improve the operational readiness of Army electronic and avionic systems.

AN/TSM-191(V)2

AN/TSM-191(V)3

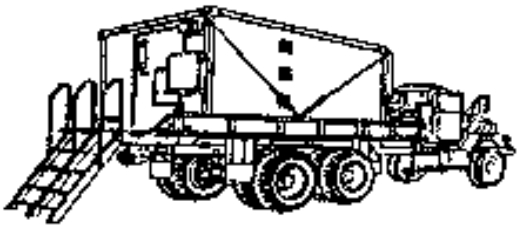

AN/TSM-191(V)4

Figure 1. Family AN/TSM-191 Vehicles

0001 00-1

FIGURE 1. <u>Example of a general information work package.</u>

MAINTENANCE FORMS, RECORDS, AND REPORTS

Department of the Army forms and procedures used for equipment maintenance will be those prescribed by (as applicable) DA PAM 738-750, Functional Users Manual for the Army Maintenance Management System (TAMMS); DA PAM 738-751, Functional Users Manual for the Army Maintenance Management System-Aviation (TAMMS-A); or AR 700-138, Army Logistics Readiness and Sustainability.

REPORTING EQUIPMENT IMPROVEMENT RECOMMENDATIONS (EIR)

If your shelter needs improvement, let us know. Send us an EIR. You, the user, are the only one who can tell us what you don t like about your equipment. Let us know why you don t like the design or performance. Put it on an SF 368 (Product Quality Deficiency Report). Mail it to the address specified in DA PAM 738-750, or as specified by the contracting activity. We will send you a reply.

CORROSION PREVENTION AND CONTROL (CPC)

Corrosion Prevention and Control (CPC) of Army materiel is a continuing concern. It is important that any corrosion problems with this item be reported so that the problem can be corrected and improvements can be made to prevent the problem in future items.

While corrosion is typically associated with rusting of metals , it can also include deterioration of other materials, such as rubber and plastic. Unusual cracking, softening, swelling, or breaking of these materials may be a corrosion problem.

If a corrosion problem is identified, it can be reported using SF 368, Product Quality Deficiency Report. Use of key words such as corrosion , rust , deterioration , or cracking will ensure that the information is identified as a CPC problem.

The form should be submitted to the address specified in DA PAM 738-750.

DESTRUCTION OF ARMY MATERIEL TO PREVENT ENEMY USE

For procedures to destroy this equipment to prevent its use by the enemy, refer to TM 750-244-2, Procedures for Destruction of Electronic Materiel to Prevent Enemy Use.

NOMENCLATURE CROSS-REFERENCE

Common Name	Official Nomenclature
Shelter	Transportable Electronic Shop (all models)
AN/TSM-191(*)	Transportable Electronic Shop (all models)

LIST OF ABBREVIATIONS / ACRONYMS

Abbreviation/Acronym	Name
ac	Alternating Current
BIT	Built-in Test
C	Celsius
ECU	Environmental Control Unit
MCPE	Modular Collective Protection Equipment

FIGURE 1. Example of a general information work package - Continued.

SAFETY, CARE, AND HANDLING

The following procedures should be observed when handling all ESD sensitive components and units containing such components. Failure to observe all of these precautions can cause permanent damage to the electrostatic device. This damage can cause the device to fail immediately or at a later date when exposed to an adverse environment.

1. Turn off and /or disconnect all power, signal sources and loads used with the unit.
2. Place the unit on a grounded non-conductive work surface.
3. Ground the repair operator using a non-conductive wrist strap or other device using 1 megaohm series resistor to protect the operator.
4. Ground any tools (including soldering equipment) that will contact the unit. Contact with the operator s hand provides a sufficient ground for tools that are otherwise electrically isolated.
5. All electrostatic sensitive replacement components are shipped in non-conductive foam or tubes and must be stored in the original shipping container until installed.
6. When these devices and assemblies are removed from the unit, they should be placed on the non-conductive work surface or in non-conductive containers.
7. When not being worked on, place disconnected circuit boards in plastic bags that have been coated or impregnated with a non-conductive material.
8. Do not handle these devices unnecessarily or remove them from their packages until actually used or tested.

END OF WORK PACKAGE

FIGURE 1. Example of a general information work package - Continued.

SAFETY, CARE, AND HANDLING

The following procedures should be observed when handling all ESD sensitive components and units containing such components. Failure to observe all of these precautions can cause permanent damage to the electrostatic device. This damage can cause the device to fail immediately or at a later date when exposed to an adverse environment.

1. Turn off and /or disconnect all power, signal sources and loads used with the unit.
2. Place the unit on a grounded non-conductive work surface.
3. Ground the repair operator using a non-conductive wrist strap or other device using 1 megaohm series resistor to protect the operator.
4. Ground any tools (including soldering equipment) that will contact the unit. Contact with the operator s hand provides a sufficient ground for tools that are otherwise electrically isolated.
5. All electrostatic sensitive replacement components are shipped in non-conductive foam or tubes and must be stored in the original shipping container until installed.
6. When these devices and assemblies are removed from the unit, they should be placed on the non-conductive work surface or in non-conductive containers.
7. When not being worked on, place disconnected circuit boards in plastic bags that have been coated or impregnated with a non-conductive material.
8. Do not handle these devices unnecessarily or remove them from their packages until actually used or tested.

END OF WORK PACKAGE

FIGURE 1. Example of a general information work package - Continued.

TM 11-6625-3178-14 **0002 00**

OPERATOR, UNIT, DIRECT AND GENERAL SUPPORT MAINTENANCE
TRANSPORTATION ELECTRONIC SHOP
NSN 4940 01 293 5615, EIC XXX
DESCRIPTION AND DATA

EQUIPMENT CHARACTERISTICS, CAPABILITIES, AND FEATURES

The Transportable Electronic Shop, AN/TSM-191(*) is a truck mounted, modified S-28OC/G electrical equipment shelter which contains an Electrical-Electronic Equipment Test Station AN/USM- 632(*), an Environmental Control Unit (ECU), Modular Collective Protection Equipment (MCPE) (applies to AN/TSM-191(V)2 and AN/TSM-19I(V)3 only), a power distribution system and interconnecting cables. The shelter is a frontline automatic test system used to perform diagnostic checks and troubleshoot designated electronic systems. The modified S-28OC/G shelter provides housing, equipment and work space for the AN/USM-632(*). The AN/USM-632(*) performs computer controlled testing on suspected faulty Units Under Test (UUTs).

The test station is installed in a truck mounted shelter. The shelter cooling and heating is provided by a built in ECU which allows operation under a wide range of weather conditions. Environmental protection against chemical and biological contamination is provided by the MCPE (applies to AN/TSM-191(V)2 and AN/TSM-19I(V)3 only). The shelter is powered by an external power source. The test station is capable of running self-test and self-alignment programs with fault isolation routines. Tests and isolates faults in UUTs automatically via computer controlled test programs.

LOCATION AND DESCRIPTIONS OF MAJOR COMPONENTS

EXTERIOR COMPONENTS

NOTE

Horizontal ECU is used only on AN/TSM-191 (V)3. Vertical ECU is used only on AN/TSM-191(V)2 and AN/TSM-191(V)4. The following paragraph applies to both models of ECU's.

ENVIRONMENTAL CONTROL UNIT (ECU)

The ECU is a compact, electric motor driven unit which provides filtered, cooled air (and heated air, as required) to maintain the service conditions of the AN/USM-632(*). The horizontal unit has a cooling compactly of 36,000 BTU/hr and a heating capacity of 31,200 BTU/hr. The input power requirements for the horizontal ECU are three phase, 208 delta volts ac, 50/60Hz at 13.5 kw. The vertical unit has a cooling capacity of 36,000 BTU/hr and a heating capacity of 28,600 BTU/nr. The input power requirements for the vertical ECU are three phase, 208 delta volts ac, 400 Hz at 1 l.0 kw. A detailed description of both model air conditioners can be found in the technical manuals referenced in WP 0205 00.

MODULAR COLLECTIVE PROTECTION EQUIPMENT (MCPE)

The MCPE removes toxic gases and dust from air supplied to the shelter in a Nuclear, Biological Chemical (NBC) environment. The MCPE consists of an XM20 external Integrated Protective Entrance (external IPE) and an XM93-100 CFM Gas-Particulate Filter Unit (GPFU). The external IPE is a collapsible assembly which provides a pressurized transition area between the shelter and the outside contaminated environment.

0002 00-1

FIGURE 2. Example of an equipment description and data work package.

EXTERIOR COMPONENTS–Continued

The external IPE assembly consists of top and bottom pan assemblies, support assemblies and a biological and chemical resistant fabric assembly that attaches to the pan assemblies. The fabric forms the entrance assembly walls and has a zipper sewn in which forms the access door to the protective entrance from the outside contaminated zone. A door assembly consists of inner and outer door assemblies. The protective entrance a mounts to the outside of the outer door. During non-NBC operation, the entrance is collapsed against the outer door. In this operating mode, the outer door functions as a normal shelter door to allow access to the shelter and ventilation for shelter personnel. During NBC operation, the entrance assembly is erected and access to the shelter is through the inner door and the zipper door on the entrance assembly. A Protective Entrance Module (PEM) is mounted in the roof shell of the top pan assembly. When the entrance assembly is erect, the PEM provides white or blackout (red) lighting, decontamination purge timing and low pressure warning for the protective entrance.

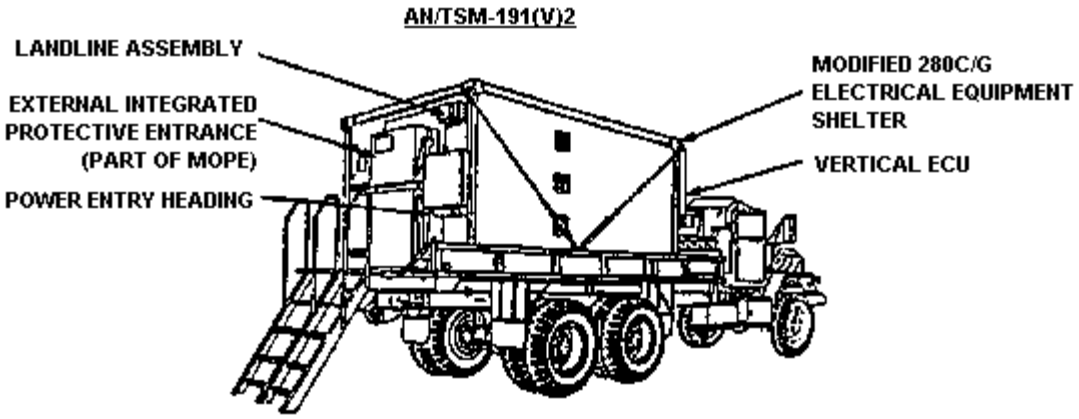

Figure 1. Exterior Components

INTERIOR COMPONENTS

The AN/USM-632(*) is an automatic test system used to perform diagnostic checks and troubleshoot designated electronic subsystems. It is mounted to the base assembly on the roadside of the modified shelter. A detailed description of the AN/USM-632(*) is provided in TM 11-6625-3173-12-1.

A thermal detector and alarm assembly is mounted to the inside wall of the shelter near the air conditioner. This unit monitors the air temperature inside the shelter via a thermocouple mounted inside the air conditioner, behind the return air vent. A meter on the front panel provides a visual indication of shelter temperature in degrees Fahrenheit and a horn provides an audible alarm to alert shelter personnel of a potentially damaging condition for the AN/USM-632(*) equipment due to a rising ambient temperature or a temperature below the minimum operating level. This horn will sound when the temperature is above 90 F or below 50 F.

FIGURE 2. Example of an equipment description and data work package - Continued.

INTERIOR COMPONENTS–Continued

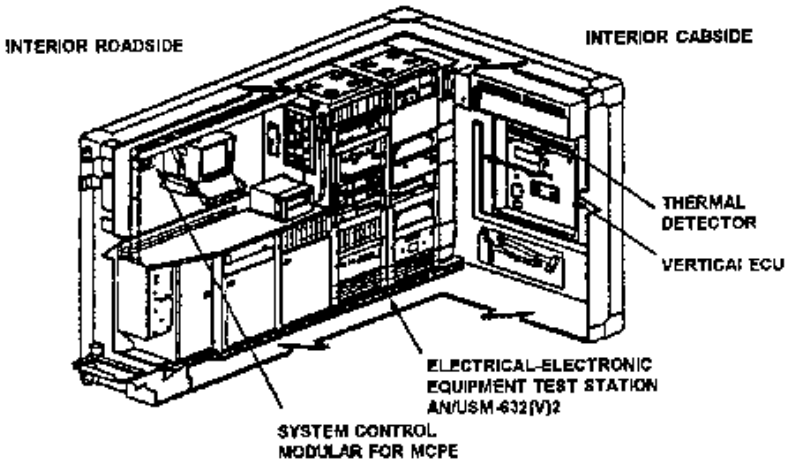

Figure 2. Interior Components

DIFFERENCES BETWEEN MODELS

Table 1 summarizes the differences between the three models of the shelter covered in this manual.

Table 1. Differences Between Models.

EQUIPMENT DESCRIPTION	AN/TSN-191(v)2 P/N A3070220-4	AN/TSN-191(v)3 P/N A3100860-2	AN/TSN-191(v)4 P/N A3143250
Electrical-Electronic Equipment Test Station ModelAN/USM-632(V)2	X		X
Electrical-Electronic Equipment Test Station Model AN/USM-632(V)3		X	
Air Conditioner, Vertical, Compact, Keco Model: F36T4-2SB	X		X
Air Conditioner, Horizontal, Compact, Keco Model: F36H-2S		X	
Frequency Converter, Avionics Instruments, Model: 4A3000-1B-HRP	X		X

FIGURE 2. Example of an equipment description and data work package - Continued.

TM 11-6625-3178-14 **0015 00**

OPERATOR, UNIT, DIRECT AND GENERAL SUPPORT MAINTENANCE
TRANSPORTATION ELECTRONIC SHOP
NSN 4940 01 293 5615, EIC XXX
THEORY OF OPERATION

POWER ENTRY HOUSING AND SECONDARY INPUT POWER FILTER

Three phase input power from an external source, i.e. diesel powered generator or facility power, is cabled to the power entry housing and connected to the power input connector. Inside the housing, each phase line and the neutral line are wired to four independent surge arresters and the primary input power fitter. The surge arresters protect the circuits within the shelter from transients caused by lightning, induction, switching surges and Electro Magnetic Pulse (EMP). When a surge voltage exceeds the spark over voltage of the arrester, the arrester becomes a short circuit and remains so until the transient has been by-passed and the line automatically returns to normal. The primary input power filter suppresses condition of noise caused by Electro Magnetic Interference (EMI), into and out of the shelter over the input power lines. A secondary input power filter is connected in series with the primary input power fitter to ensure protection of shelter circuits from transient voltages below the spark over voltage of the EMP protectors coming in through the power lines.

POWER DISTRIBUTION ASSEMBLY (PDA)

The PDA consists of a bass assembly which houses the circuit protection and the power distribution panel which contains circuit breakers and indicators. The circuit protection devices consist of an over/under voltage-relay, a phase sequence relay and an over current relay. If a condition exists in a circuit that does not meet the parameters of any one of these devices, that fault will cause the MAIN POWER circuit breaker to reset to the OFF position, thereby removing power to the internal circuits of the shelter and causes the AC POWER FAULT light to come on. When set to ON, the MAIN POWER circuit breaker applies power to the inputs of the other breakers and three green power indicators showing power applied for each phase will come on. As each of the remaining circuit breakers are set to ON, the corresponding indicators will come on providing a visual indication of power applied to each circuit.

ENVIRONMENTAL CONTROL UNIT (ECU)

(Horizontal ECU is used only on the AN/TSM-191 (V)3 model of the shelter. Vertical ECU is used only on the AN/ TSM-191(V)2 and AN/TSM-191(V)4 models of the shelter.) Once started, the air conditioner operates automatically due to the relationship of the components, controls and instruments. With the model selector switch in the OFF position, all electrical components are isolated from electrical power except for the crankcase heater. This device must be energized for 30 minutes prior to operation in the coolmode. The following operating modes of the ECU are controlled by the mode selector switch.

Ventilation

Ventilation is provided in the VENT position by energizing the fan motor which forces air out of the evaporator discharge louver. The amount of outdoor air used for ventilation is determined by the position of the fresh air damper.

0015 00-1

FIGURE 3. Example of a system theory of operation work package.

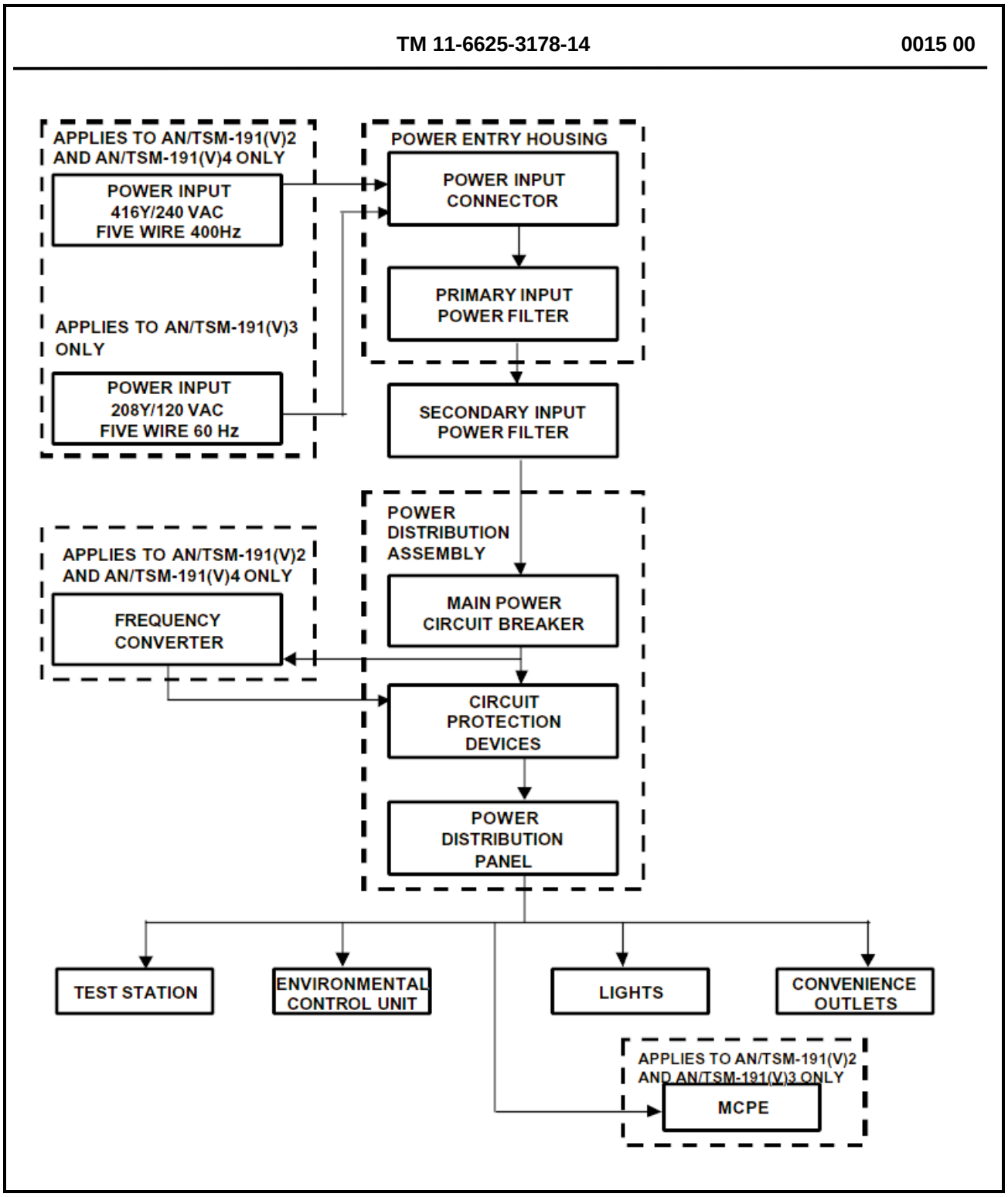

FIGURE 3. <u>Example of a system theory of operation work package</u> - Continued.

TM 11–6625–3178–14 **0202 00**

OPERATOR, UNIT, DIRECT AND GENERAL SUPPORT MAINTENANCE
TRANSPORTATION ELECTRONIC SHOP
NSN 4940 01 293 5615, EIC XXX

CONTROL AND INDICATORS

GENERAL

The following paragraphs contain illustrations that show the location of each control and indicator for operation of the AN/TSM-191(*). Each control and indicator is clearly labeled as it appears on the equipment. Find numbers on the illustration are keyed to the tabular listing which contains the name, based on the panel markings, and the functional description of each control and indicator.

POWER DISTRIBUTION PANEL CONTROLS AND INDICATORS

Table 1 describes the controls and indicators for the power distribution panel.

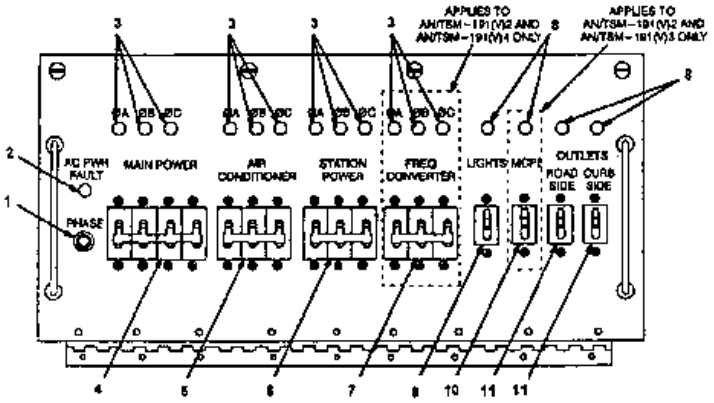

Figure 1. Power Distribution Panel Controls and Indicators

TABLE 1.

Key	Control/Indicator	Function
1	PHASE indicator	When lit, indicates power applied to the input side of the MAIN POWER circuit breaker has the correct phase sequence of A-B-C.
2	AC PWR FAULT indicator	When lit, indicates power is applied to the input side of the MAIN POWER circuit breaker and the MAIN POWER circuit is in the OFF (down) position.
3	ΦA, ΦB, ΦC indicators	When lit, indicates circuit breaker; either MAIN POWER, AIR CONDITIONER, STATION POWER, or FREQ CONVERTOR (applies to AN/TSM-191(V)2 and AN/TSM-191(V)4) is in the ON (UP) position and power applied to the input side of the breaker is now applied to the outputs of the breaker.

0202 00-1

FIGURE 4. <u>Example of an operator's controls and indicators work package.</u>

TM 11–6625–3178–14 **0304 00**

OPERATOR, UNIT, DIRECT AND GENERAL SUPPORT MAINTENANCE
TRANSPORTATION ELECTRONIC SHOP
NSN 4940 01 293 5615, EIC XXX

OPERATION UNDER USUAL CONDITIONS

INITIAL SETUP:

Personnel Required
Electrical Technician (2)

GENERAL

The equipment contained within this test facility is normally shipped assembled. The assembly paragraph provides the data and procedures for the steps to be taken when AN/TSM-191(*) is emplaced. The items included are ladder installation, ground rod installation, primary power connection and air conditioner drain plug removal.

SITING

WARNING

The power source must be placed at least 75 feet from the test facility.

CAUTION

If the outside ambient temperature is expected to be 90 degrees or above, position the shelter with roadside shaded, if possible, to minimize the effect of direct sunlight.

1. The site requirements for emplacement of the AN/TSM-191 (*) consist of a three-phase 416 wye/ 240 volt ac, 400 Hz (applies to the AN/TSM-191(V) 2 and AN/TSM-191 (V) 4 only or threephase 208 wye/120 volts ac, 60 HZ (applies to the AN/TSM-191 (V)3 only) primary power source.
2. The AN/TSM-191 (*) should be placed on a minimum of 15 by 25 feet of firm level ground with a six percent slope or less.
3. The power source should be placed at least 75 feet from the facility.

ASSEMBLY AND PREPARATION FOR USE
LADDER INSTALLATION

WARNING

The ladder must be installed to provide access to the AN/TSM-191 Ladder weighs 75 lbs. Two people are required to lift the ladder.

1. Remove ladder (figure 1, item 1) from storage brackets on exterior entry end of shelter.

0304 00-1

FIGURE 5. Example of an operation under usual conditions work package.

2. Remove hooks (figure 1, item 5) from retainer slots on both sides of tail gate (figure 1, item 4).
3. Grasp top of tail gate and pull It back. Do not allow tail gate to drop.
4. Replace hooks in slots of tail gate to secure tail gate in horizontal position.
5. Pull out retaining pins and remove railings (figure 1, item 2) from ladder.

NOTE

Ladder should be positioned for use while strapped in the folded position.

6. Slide U-brackets (figure 1, item 3) at top end of ladder over edge of tail gate.

NOTE

When ladder is unfolded, do not separate. Ensure hinge pins are engaged.

7. Loosen straps (figure 1, item 9) and unfold ladder.
8. To release lanyards (figure 1, item 7) from the stored position. pull up on center locking pin and pull cord through.
9. Hook retaining brackets (figure 1, item 6) on bottom of tail gate, pull free and of cord (figure 1, item 8) and push down on center locking pin to secure ladder in position.
10. Install railing (figure 1, item 2) on ladder.

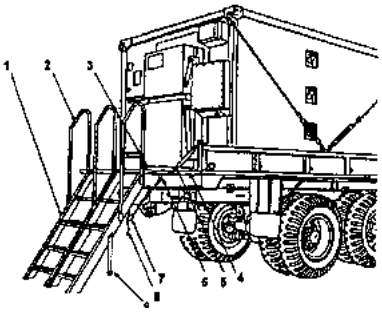

Figure 1. Ladder Installation

END OF WORK PACKAGE

FIGURE 5. Example of an operation under usual conditions work package - Continued.

TM 11-4625-3178-14 **0303 00**

OPERATOR, UNIT, DIRECT AND GENERAL SUPPORT MAINTENANCE

NBCRS FOX M93A1

NSN 6665 01 372 1303, EIC XXX

TROUBLESHOOTING INDEX

Malfunction/Symptom — Troubleshooting Procedure

LEFT DATA WORD DISPLAY WARNINGS

1. BRAKE comes on ..... WP 1203 00
2. AIR PRESSURE does not come on - brake pressure is low ..... WP 1203 00
3. COOLANT comes on and ENG. COOLING gage indicates excessive coolant temperature ..... WP 1203 00
4. ENG. OIL PRESS comes on and engine oil pressure is low WP ..... WP 1203 00
5. HYDRAULIC OIL comes on ..... WP 1203 00
6. HYDRAULIC OIL does not come on - reservoir level is low ..... WP 1203 00

DRIVER S LEFT INSTRUMENT PANEL INDICATOR LIGHTS

7. STANDBY HYDRAULIC indicator light does not come on with emergency hydraulic system on ..... WP 1300 00
8. TRUCK TURN SIGN light does not come on when push lever on steering column switch is pulled upward or pushed downward - vehicle flasher lights operate normally ..... WP 1304 00
9. UPPER BEAM indicator light does not come on - high beam headlights operate normally ..... WP 1304 00

RIGHT DATA WORD DISPLAY WARNINGS

10. BATT. CHARGER does not come on when MAIN SWITCH is set to position 1 ..... WP 1405 00
11. Flasher warning lights do not work ..... WP 1405 00
12. FUEL does not come on and fuel gage does not indicate low fuel level - fuel level is low ..... WP 1405 00
13. HYDR PRESS comes on ..... WP 1405 00
14. BRAKE LINING does not come on - brake lines are leaking ..... WP 1405 00
15. NORMAL MODE or SIL WATCH does not appear on commander s data word display when NBC CP SYS. switch is set to either NORMAL MODE or SIL WATCH ..... WP 1506 00
16. PRESSURE GAGE does not read properly when NBC collective protection system is in NORMAL MODE or SIL WATCH ..... WP 1506 00
17. DUST FILTER appears on commander s data word display when NBC CP SYS. switch is set to either NORMAL MODE or SIL WATCH ..... WP 1506 00

END OF WORK PACKAGE

0303 00-1

FIGURE 6. Example of a troubleshooting malfunction/symptom index.

TM 11-4625-3178-14 **1837 00**

OPERATOR MAINTENANCE
NBCRS FOX M93A1
NSN 6665 01 372 1303, EIC XXX
TROUBLESHOOTING PROCEDURE

INITIAL SETUP:

Materials/Parts
Oil (Item 20, WP 0270 00)

LEFT DATA WORD DISPLAY WARNINGS

Table 1. Troubleshooting Procedures.

MALFUNCTION	TEST OR INSPECTION	CORRECTIVE ACTION
1. BRAKE IN LEFT DATA WORD DISPLAY COMES ON	1. Shut down engine (see WP 0087 00).	
	2. Check oil level in brake system master cylinder reservoir (see LO 9-6665-376-12).	1. If brake system master cylinder reservoir level is low, add oil (see LO 9-6665-376-12) and continue normal operation. 2. If brake system master cylinder level is above minimum level mark, go to step 3.
	3. Check oil level in hydraulic brake system expansion tank (see LO 9-6665-376-12).	1. If oil level in hydraulic brake expansion tank is 2. If oil level in hydraulic brake expansion tank is above minimum level mark, notify unit maintenance.
2. AIR PRESSURE IN LEFT DATA WORD DISPLAY DOES NOT COME ON - BRAKE PRESSURE IS LOW	1. Shut down engine (see WP 0087 00)	

1837 00-1

FIGURE 7. Example of a troubleshooting work package initial setup and procedure.

ITEM/PROCEDURE	NORMAL INDICATION	CORRECTIVE ACTION
3. On URO, press RCVD key	URO displays the following: MODE MSG MESSAGE DESCRIPTOR R E C T E S T ☐ O X ☐ DUAL ZONE EAST/BRG NORTH BRG A S V O O O O X X O X SV displayed in ZONE field	1. If URO MESSAGE DESCRIPTOR displays any of the following, replace BUU: FA FAULT BAR FAIL CSC LIM. 2. If URO MESSAGE DESCRIPTOR displays SDU ALRM, perform the

TABULAR TROUBLESHOOTING PROCEDURE BASED ON TEST PROCEDURES

MALFUNCTION	TEST OR INSPECTION	CORRECTIVE ACTION
16. WATER PUMP FAILS TO ROTATE	1. Check for broken or cracked motor, damaged shaft threads, and bent shaft	1. Replace motor if defective (WP 1520 00 or WP 1521 00). Remove the motor, using illustrated instructions below. 2. Tag and disconnect electrical leads as necessary.

TABULAR TROUBLESHOOTING PROCEDURE BASED ON KNOWN MALFUNCTIONS

MALFUNCTION	PROBABLE CAUSE	CORRECTIVE ACTION
1. With generator power applied to the Shelter, MAIN POWER circuit breaker is off, Phase Sequence light is out.	1. Generator Power 2. Phase Sequence indicator 3. Secondary Filter (FL2) 4. Surge Protector 5. Power Input Filter (FL1) 6. Power Input Cable	1. Check generator output power. Adjust as required. 2. Check connections at generator and shelter. **WARNING** Use extreme caution when making power on checks 3. Check secondary filter (FL2) voltage: a. Loosen screws and open cover of FL2 **Note** Measure LOAD voltage for FL2 terminals.

TABULAR TROUBLESHOOTING PROCEDURE BASED ON KNOWN MALFUNCTION THAT EXISTS

FIGURE 8. Examples of tabular troubleshooting procedures.

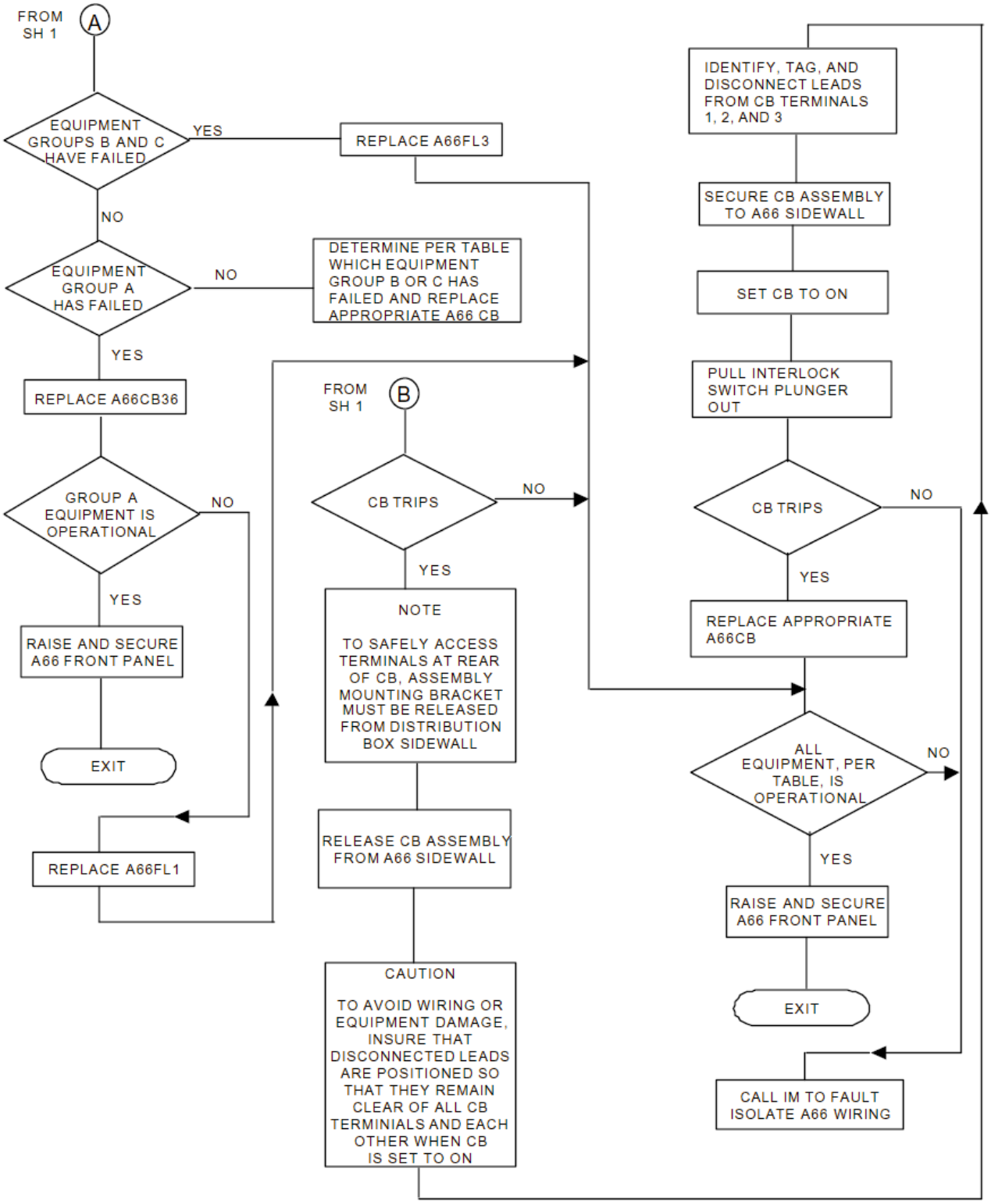

FIGURE 9. <u>Example of a functional flow logic tree troubleshooting procedure.</u>
(For page-based manuals only.)

23. SIGNAL NAME: DASEC STATUS WORD DC ANALOG OUTPUT BIT
MEMORY LOCATION: 002150
MEMORY DATA BIT(S): 15 (BINARY)
CONDITION: (None)
SIGNAL FUNCTION: Indicates status of DC analog circuits.
REMARKS: From DASEC to FCC.
PASS: If second digit displayed on HOD is 3 or 7, go to step 24.
FAIL: Location of fault: replace DASEC (TM 1-1520-238-23 Series).

24. SIGNAL NAME: DASEC STATUS WORD AD/DA BIT
MEMORY LOCATION: 002150
MEMORY DATA BIT(S): 13 (BINARY)
CONDITION: (None)
SIGNAL FUNCTION: Indicates status of analog-to-digital and digital-to-analog circuits.
REMARKS: From DASEC to FCC.
PASS: If third digit displayed on HOD is 1, 3, 5, or 7, go to step 25.
FAIL: Location of fault: replace DASEC (TM 1-1520-238-23 Series).

25. SIGNAL NAME: DASEC STATUS WORD FD/LS TEST
MEMORY LOCATION: 002150
MEMORY DATA BIT(S): 12 (BINARY)
CONDITION: (None)
SIGNAL FUNCTION: Indicates FD/LS ground test is being run.
REMARKS: From DASEC to FCC.
PASS: If third digit displayed on HOD is 1 or 5, go to step 26.
FAIL: Location of fault: replace DASEC (TM 1-1520-238-23 Series).

26. SIGNAL NAME: DASEC STATUS WORD ASE BIT
MEMORY LOCATION: 002150
MEMORY DATA BIT(S): 11 (BINARY)
CONDITION: (None)
SIGNAL FUNCTION: Indicates last FD/LS test ASE bit status.
REMARKS: From DASEC to FCC.
PASS: If third digit displayed on HOD is 1, go to step 27.
FAIL: Location of fault: replace DASEC (TM 1-1520-238-23 Series).

FIGURE 10. Example of a troubleshooting based on multiplex read codes.

28 VDC - IS NOT PRESENT AT P769-A AND P769-J – Continued

STEP

8. Detach wire at CB-1. Check for short between CB2-1 and ground.

CONDITION/INDICATION

Does short exist?

DECISION

YES–Go to step 9.
NO–Go to step 10.

STEP

9. Remove bus bar between CB1 and CB2. Check for short between CB1 and ground.

CONDITION/INDICATION

Does short exist?

DECISION

YES–Replace shorted MUX L PYL INBD circuit breaker (CB1) (TM 55-1520-238-23 series).
NO–Replace shorted MUX L PYL OUTBD circuit breaker (CB2) (TM 55-1520-238-23 series).

STEP

10. Attach CB2 and CB1 wire. Detach wire at CB5-1. Check for short between (A77) J4-A and ground.

CONDITION/INDICATION

Does short exist?

DECISION

YES–Repair shorted wire between CB1-1 and CB5-1. Go to WP 3641 00.
NO–Go to step 11.

STEP

11. Detach wire at CB6-1. Check for short between CB5-1 and ground.

CONDITION/INDICATION

Does short exist?

DECISION

YES–Go to step 12.
NO–Go to step 13.

STEP

12. Remove bus bar between CB5 and CB6. Check for short between CB5 and ground.

CONDITION/INDICATION

Does short exist?

DECISION

YES–Replace MUX R PYL INBD circuit breaker (CB5) (TM 55-1520-238-23 series).
NO–Replace MUX R PYL OUTBD circuit breaker (CB6) (TM 55-1520-238-23 series).

STEP

13. Remove bus bar between CB5 and CB6. Check for short between CB5 and ground.

CONDITION/INDICATION

Does short exist?

FIGURE 11. Example of a text-logic troubleshooting procedure.

Table 2. Inspection Criteria for Packaging.

COMPONENT	ACCEPTABLE	REPARABLE	NONREPARABLE
Wooden Boxes and Crates			
Hardware	Operative and tight. Nails, screws, and fasteners present and in good condition.	Inoperative or loose. Nails, screws, and fasteners that can be replaced or properly sealed.	None None
Ends Wood	Free from damage. Splits less than 3 inches long, no closer than 1 inch to edge of board or adjoining split. The board must be secured by at least one nail on each side of the split when it extends to the end of the board.	Broken or missing cleats and handles. Splits more than 3 inches but no closer than 1 inch to edge of board or adjoining split, or ½-inch wide, that can be repaired by use of corrugated fasteners.	Damage that requires disassembly of box. Splits closer than 1 inch to edge of board or adjoining split or over ½-inch wide.
Fiber Containers			
Metal Ends	Minor rust, cracks, indentations, or splits that would not impair water proofing or serviceability of container.	None	Perforations, excessive rust, or ends which are crushed or not securely crimped to body.
Body and Cap	No tears, cuts or gouges.	Cuts, tears, or gouges not closer than 1 inch to closure, less than ½ square inch in area, and unpenetrated layers that can be spot painted.	Cuts, tears, or gouges closer than 1 inch to closure, more than ½ square inch in area, or through all impregnated layers.

FIGURE 12. <u>Example of packaging inspection/service upon receipt.</u>

Table 3. M29 and M30 Control Surfaces and Containers.

LOCATION	ITEM	ACTION	REMARKS
1. Container	Components	1. Inspect for rust, fungus, paint damage, and deformation.	WP 0125 00
		2. Reject container if damage prevents it from functioning properly.	--
2. M29	Control Surfaces	1. Inspect for dents and scratches on post, trailing edge phenolic, skin, and closure plate.	WP 0128 00
		2. Reject control surface:	--
		a. If post dents or scratches exceed 0.002 in. (0.051 mm).	
		b. If trailing edge phenolic dents exceed 0.040 in. (10.160 mm).	
		c. If skin dents exceed 0.030 in. (7.620 mm) within 2 in. (50.800 mm) of post.	
		d. If closure plate dents exceed 0.030 in. (7.620 mm) within 2 in. (50.800 mm) of post.	--
3. M30	Control Surfaces	1. Inspect for dents and scratches on post and skin.	
		2. Skin dents or scratches up to 0.050 in. (12.700 mm) are allowable, but should be blended.	--
		3. Reject control surface if post dents or scratches exceed 0.002 in. (0.051 mm).	--

FIGURE 12. <u>Example of packaging inspection/service upon receipt</u> - Continued.

TM 3-665-339-10 **0062 00**

OPERATOR MAINTENANCE
NBCRS FOX M93A1
NSN 6665 01 372 1303, EIC XXX
PMCS PROCEDURES INTRODUCTION

INTRODUCTION

General

Preventive Maintenance Checks and Services (PMCS) are performed to keep the vehicle in operating condition. The checks are used to find, correct, or report problems. Crew members are to do the PMCS jobs as shown in the PMCS table. PMCS are done every day the vehicle is operated, using the PMCS table. Pay attention to WARNING and CAUTION statements. A WARNING means someone could be hurt. A CAUTION means equipment could be damaged.

Before you begin operating vehicle equipment, do Before PMCS.

During operation, do During PMCS.

After operation, do After PMCS.

Once a week do Weekly PMCS. If vehicle has not been operated in a week, also do Before PMCS at the same time.

Do Monthly PMCS once a month. If vehicle has not been operated in a month, also do After PMCS at the same time.

If you are operating the vehicle for the first time, do your Weekly and Monthly PMCS the first time you do your Before PCMS.

If you find something wrong when performing PMCS, fix it if you can, using troubleshooting procedures and/or maintenance procedures.

The right-hand column of the PMCS table lists conditions that make the vehicle not fully mission capable. Write up items not-fixed on DA Form 2404 for unit maintenance. For further information on how to use this form, see DA PAM 738-750.

If tools required to perform PMCS are not listed in WP 1479 00, notify unit maintenance.

Leakage Definition

CAUTION

Equipment operation is allowable with minor leakages (Class I or II) except for fuel leaks. Of course, consideration must be given to the fluid capacity of the item or system being checked. When in doubt, ask your supervisor.

When operating with Class I or II leaks, continue to check fluid levels as required in your PMCS.

Class III leaks should be reported immediately to your supervisor.

It is necessary to know how fluid leakage affects the status of the vehicle. The following are definitions of the classes of leakage an operator or crew member needs to know to be able to determine the condition of the leak. Learn and then be familiar with them, and REMEMBER - WHEN IN DOUBT, ASK YOUR SUPERVISOR.

0062 00-1

FIGURE 13. Example of PMCS introduction.

Leakage Definitions for Crew/Operator PMCS.

CLASS I - Seepage of fluid (as indicated by wetness or discoloration) not great enough to form drops.

CLASS II - Leakage of fluid great enough to form drops but not enough to cause drops to drip from item being checked.

CLASS III - Leakage of fluid great enough to form drops that fall from the item being checked.

INSPECTION

Look for signs of a problem or trouble. Senses help here. You can feel, smell, hear, or see many problems. Be alert when on the vehicle.

Inspect to see if items are in good condition. Are they correctly assembled, stowed, secured, excessively worn, leaking, corroded, or properly lubricated? Correct any problems found or notify unit maintenance.

There are some common items to check all over the vehicle. These include the following:

1. Bolts, clamps, nuts, and screws: Continuously check for looseness. Look for chipped paint, bear metal, rust, or corrosion around bolt and screw heads and nuts. Tighten them when you find them loose. If tools are not available, notify unit maintenance.
2. Welds: Many items on the vehicle are welded. To check these welds, look for chipped paint, rust, corrosion, or gaps. When these conditions exist, notify unit maintenance on DA Form 2404.
3. Electrical wires, connectors, and harnesses: Tighten loose connectors. Look for cracked or broken insulation, bare wires, and broken connectors. If any are found, notify unit maintenance.
4. Hoses and fluid lines: Look for wear, damage and leaks, and make sure clamps and fittings are tight. Wet spots mean a leak. A stain by a fitting or connector can also mean a leak. When you find a leak, notify unit maintenance.

LUBRICATION SERVICE INTERVALS - NORMAL CONDITIONS

For safer, more trouble free operations, make sure that your vehicle is serviced when it needs it. For the proper lubrication and service intervals, see LO 9-6665-376-12.

LUBRICATION SERVICE INTERVALS - UNUSUAL CONDITIONS

Your vehicle will require extra service and care when you operate under unusual conditions. High or low temperatures, long periods of hard use, or continued use in sand, water, mud, or snow will break down the lubricant, requiring you to add or change lubricant more often.

CLEANING AND LUBRICATION

Proper cleaning and lubrication can aid in avoiding possible problems or trouble, so make it a habit to do the following:

END OF WORK PACKAGE

FIGURE 13. Example of PMCS introduction - Continued.

Table 1. Preventive Maintenance checks and Services for NBCRS FOX M93A1.

ITEM NO.	INTERVAL	MAN-HOUR	ITEM TO BE CHECKED OR SERVICED	PROCEDURE	EQUIPMENT NOT READY/ AVAILABLE IF:
				NOTE Driver, commander and crew will inspect for damaged or missing items while performing checks in walkaround sequence.	
1	Before		Vehicle Exterior	**COMMANDER** Check for damaged and missing items. Check lighting fixtures. Make sure all stowed items (pioneer equipment, etc.) are secured to vehicle for travel. Secure stowed items. Replace missing items. Report major damage of lighting fixtures. Report minor damage after operations.	Any damage or missing items that will prevent operation.
2	Before		Left Side Exercise	**DRIVER** **NOTE** If leakage is detected, further investigation is needed to determine the location and cause of the leak. 1. Check underneath vehicle for evidence of fuel, or coolant.	Any class III leak of oil, fuel leakage.
3	Before		Left Side Tires	**DRIVER** **WARNING** Operating a vehicle with an improperly inflated tire or with a questionable defect may lead to premature tire failure and cause equipment damage, injury, or death to personnel. Check for missing or damaged tires and wheels. Visually check for proper tire inflation.	Missing or damaged tires or wheels. Flat or deflated tires.

FIGURE 14. <u>Example of PMCS table.</u>

TM 3-6665-339-10 **0132 00**

Before "Vehicle Exterior Walkaround" PMCS Procedures

These illustrations will help you perform BEFORE vehicle exterior walkaround PMCS. The callouts match PMCS item number/procedures.

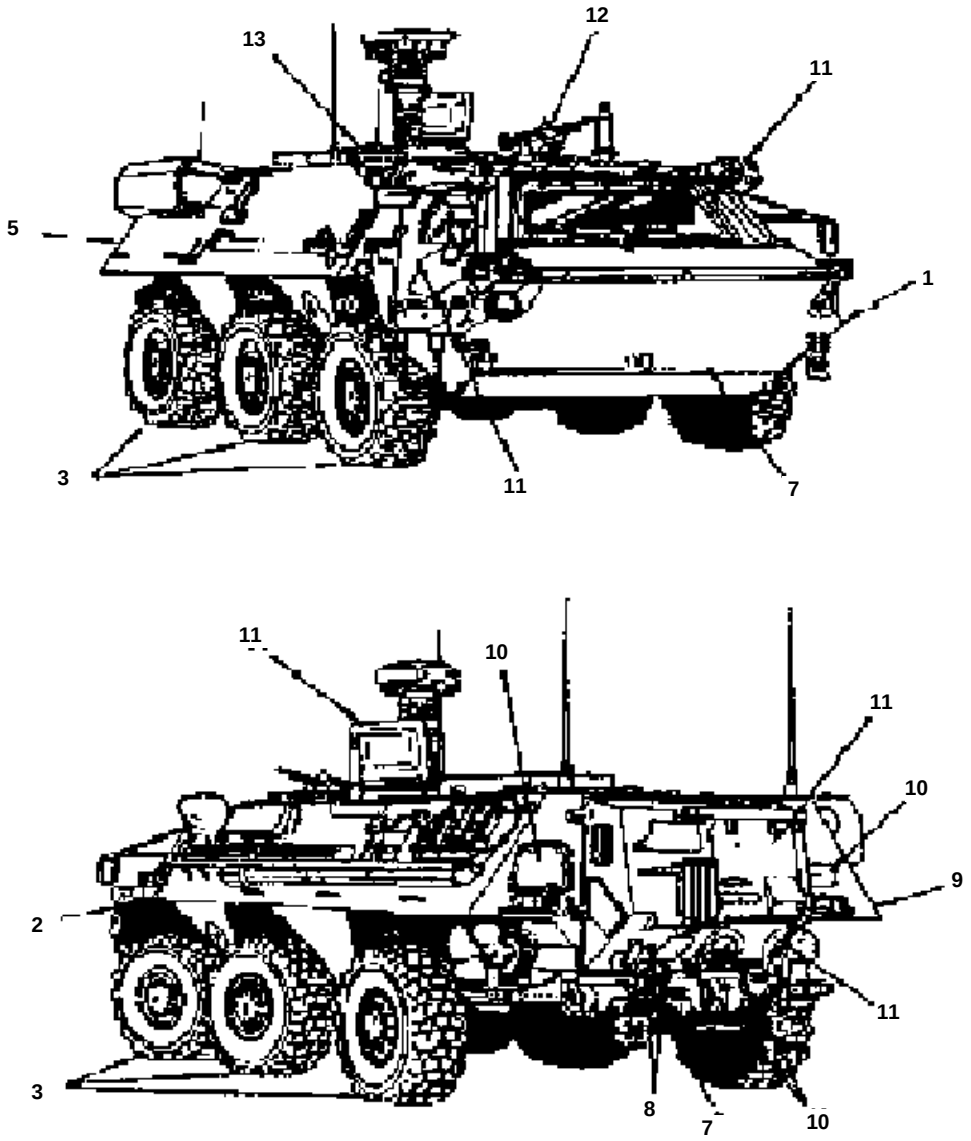

Figure 1. Vehicle check points.

FIGURE 14. <u>Example of PMCS table</u> - Continued.

Table 1. Preventive Maintenance checks and Services for NBCRS FOX M93A1.

ITEM NO.	INTERVAL	MAN-HOUR	ITEM TO BE CHECKED OR SERVICED	PROCEDURE	EQUIPMENT NOT READY/ AVAILABLE IF:
7	Before		Reciprocator	**CREW MEMBER 1** **WARNING** Do not remove cap (figure3, item 37) when engine is hot. 1. Check pins (figure3, item 35) before firing. Pins must not extend over 3/4 inch (19.1mm); 1/8 inch (3.2mm) is correct. If pins (figure3, item 35) do extend beyond 3/4 inch, remove cap (figure3, item 37) from valve (figure3, item 36) and hydraulic fluid (item 5, WP 0746 00) until pins extend 1/8 inch. **NOTE** The reciprocator is charged with a pressure of 550 psi (38.5 kg/cm^2) in the M109 and M109A1. With temperature of 100° F or over, 600 o psi (42.0 kg/cm^2) in the M109A1 is 2 recommended 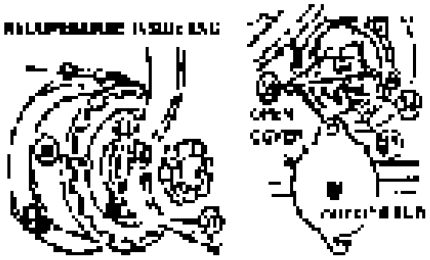 **Figure 3. Reciprocator**	Pins (figure3, item 35) extended over 3/4 inch

FIGURE 15. <u>Example of PMCS table format with crew member grouping.</u>

OPERATOR MAINTENANCE
NBCRS FOX M93A1
NSN 6665 01 372 1303, EIC XXX
PMCS PROCEDURES INTRODUCTION

INTRODUCTION

General

Preventive Maintenance Checks and Services (PMCS) are performed to keep the vehicle in operating condition. The checks are used to find, correct, or report problems. Crew members are to do the PMCS jobs as shown in the PMCS table. PMCS are done every day the vehicle is operated, using the PMCS table. Pay attention to WARNING and CAUTION statements. A WARNING means someone could be hurt. A CAUTION means equipment could be damaged.

Before you begin operating vehicle equipment, do Before PMCS.

During operation, do During PMCS.

After operation, do After PMCS.

Once a week do Weekly PMCS. If vehicle has not been operated in a week, also do Before PMCS at the same time.

Do Monthly PMCS once a month. If vehicle has not been operated in a month, also do After PMCS at the same time.

If you are operating the vehicle for the first time, do your Weekly and Monthly PMCS the first time you do your Before PCMS.

If you find something wrong when performing PMCS, fix it if you can, using troubleshooting procedures and/or maintenance procedures.

The right-hand column of the PMCS table lists conditions that make the vehicle not fully mission capable. Write up items not-fixed on DA Form 2404 for unit maintenance. For further information on how to use this form, see DA PAM 738-750.

If tools required to perform PMCS are not listed in WP 1479 00, notify unit maintenance.

Leakage Definition

CAUTION

Equipment operation is allowable with minor leakages (Class I or II) except for fuel leaks. Of course, consideration must be given to the fluid capacity of the item or system being checked. When in doubt, ask your supervisor.

When operating with Class I or II leaks, continue to check fluid levels as required in your PMCS.

Class III leaks should be reported immediately to your supervisor.

It is necessary to know how fluid leakage affects the status of the vehicle. The following are definitions of the classes of leakage an operator or crew member needs to know to be able to determine the condition of the leak. Learn and then be familiar with them, and REMEMBER - WHEN IN DOUBT, ASK YOUR SUPERVISOR.

FIGURE 16. Example of a maintenance work package.

Leakage Definitions for Crew/Operator PMCS.

CLASS I - Seepage of fluid (as indicated by wetness or discoloration) not great enough to form drops.

CLASS II - Leakage of fluid great enough to form drops but not enough to cause drops to drip from item being checked.

CLASS III - Leakage of fluid great enough to form drops that fall from the item being checked.

INSPECTION

Look for signs of a problem or trouble. Senses help here. You can feel, smell, hear, or see many problems. Be alert when on the vehicle.

Inspect to see if items are in good condition. Are they correctly assembled, stowed, secured, excessively worn, leaking, corroded, or properly lubricated? Correct any problems found or notify unit maintenance.

There are some common items to check all over the vehicle. These include the following:

1. Bolts, clamps, nuts, and screws: Continuously check for looseness. Look for chipped paint, bear metal, rust, or corrosion around bolt and screw heads and nuts. Tighten them when you find them loose. If tools are not available, notify unit maintenance.
2. Welds: Many items on the vehicle are welded. To check these welds, look for chipped paint, rust, corrosion, or gaps. When these conditions exist, notify unit maintenance on DA Form 2404.
3. Electrical wires, connectors, and harnesses: Tighten loose connectors. Look for cracked or broken insulation, bare wires, and broken connectors. If any are found, notify unit maintenance.
4. Hoses and fluid lines: Look for wear, damage and leaks, and make sure clamps and fittings are tight. Wet spots mean a leak. A stain by a fitting or connector can also mean a leak. When you find a leak, notify unit maintenance.

LUBRICATION SERVICE INTERVALS - NORMAL CONDITIONS

For safer, more trouble free operations, make sure that your vehicle is serviced when it needs it. For the proper lubrication and service intervals, see LO 9-6665-376-12.

LUBRICATION SERVICE INTERVALS - UNUSUAL CONDITIONS

Your vehicle will require extra service and care when you operate under unusual conditions. High or low temperatures, long periods of hard use, or continued use in sand, water, mud, or snow will break down the lubricant, requiring you to add or change lubricant more often.

CLEANING AND LUBRICATION

Proper cleaning and lubrication can aid in avoiding possible problems or trouble, so make it a habit to do the following:

END OF WORK PACKAGE

FIGURE 16. Example of a maintenance work package - Continued.

PHASE NO. _____	PHASED MAINTENANCE CHECKLIST				
Area Name and No. GENERAL		Aircraft Serial No.	Date:	Total Hrs. This Area	
Inspect Phase Nos	Inspection Requirements	Status	Faults and/or Remarks	Action Taken	Initial
ALL	1. Prior to inspection, check forms and records for recorded deficiencies (Table 1-2).				
ALL	2. Fuel tanks shall be fully serviced prior to start of phased inspection. If maintenance is to be accomplished which requires refueling, this item may be deferred until after such maintenance is completed.				
ALL	3. Perform avionics inspections systems inspection checks and tests as applicable in avionics maintenance manual.				
ALL	4. Perform armament systems inspection checks and tests as applicable in armament maintenance manuals.				

"FOR REMINDER"

Check work area for tools and parts after completion of maintenance and inspections.

FIGURE 17. Example of phased maintenance services.

INSPECTION
TOTAL WORK TIME

D _____
I _____
P _____

Seq. No.	Item and Procedure	D	I	P	W/T
	NOSE AREA				
1.1	Aircraft forms and records for recorded discrepancies (TM 38-750).	X	X	X	
1.2	Nose section exterior for damage.	X	X	X	
1.3	Nose compartment interior for cleanliness, equipment for damage and loose connections, and door for secure latching.	X	X	X	
1.4	Pitot tube and static ports for obstructions and cleanliness.	X	X	X	
1.4.1	Disconnect pitot/static lines from instrument ports. Remove drain caps from moisture traps.			X	
1.4.2	Purge pitot/static system with clean dry air pressure (10 - 60 PSI). Reconnect lines and caps and inspect system for leaks utilizing instrument test set.			X	
1.5	Windshields and windows for cleanliness, scratches, and cracks.	X	X	X	

Seq. No.	Item and Procedure	D	I	P	W/T
2.6	First aid kits for designated location, presence of inspection date tag, broken or missing seal, legible identification markings, and security	X	X	X	
2.7	Seats and mission equipment securely installed or stowed. Copper safety wire on armored seat quick release for condition and security.	X	X	X	
2.7.1	Seats and mission equipment for damage, positive movement, and locking. Safety belts and shoulder harnesses for damage, corrosion, cuts, fraying, and security. Inertia reels for positive locking and unlocking.		2nd	X	
2.7.2	Inspect armored seats for positive recline movement.			X	
2.8	All instruments for cleanliness, damage, and presence of slippage marks on gage lens.	X	X	X	
2.8.1	All instrument range markings for accuracy and legibility. All gage lens for looseness and slippage.			X	

FIGURE 18. Example of preventive maintenance services.

Seq. No.	Item and Procedure	M H	M O S 67T	
			A	B
	NOTE • A 10 hour/14 day inspection is done by two Tactical Transport Helicopter Repairers, MOS 67T. The two MOS 67T's are called A and B. Each inspection item is to be done by either mechanic A or mechanic B as called out opposite the inspection procedure. Where both A and B are called for in the same procedure, A should do the inspection on the left side of the helicopter and B should do it on the right side. MOS 68N personnel will be required for power-on checks. • Before starting this inspection, review aircraft forms and records for discrepancies (DA PAM 738-751) • Review cleaning requirements in TM 1-1520-237-23. • Review lubrication requirements in TM 1-1520-237-23.			

Seq. No.	Item and Procedure	M H	M O S 67T	
			A	B
	• Refer to TM 1-1520-237-23 for specific inspection procedures and accept/reject criteria. **COCKPIT SECTION**			
1.1	30HR/42 DAY Inspect nose door and nose avionics compartment as follows: – Open nose door. – Inspect nose door and doppler computer obstructions. – Check nose for damage and sea for cleanness and any deterioration. – Inspect nose door hinges for cracks. – In avionics compartment and avionics compartment door, inspect avionics.			

FOR REMINDER
Check work area for tools and parts after finishing maintenance and inspection

TM 1-1520-237-PMS-1

FIGURE 19. Example of manhour/day interval inspection checklist.

PERIODIC INSP NO._____ PERIODIC INSPECTION CHECKLIST

Area Name and No. 1. COCKPIT SECTION				Aircraft Serial No.		Date	
SEQ NO.	Inspection Requirements	MH	MOS	Status	Faults and/or Remarks	Action Taken	Initial
	NOTE • Before starting this inspection, review aircraft forms and records for discrepancies (DA PAM 738-751). • Review cleaning requirements in TM 1-1520-237-23. • Review lubrication requirements in TM 1-1520-237-23. • Refer to TM 1-1520-237-23 for specific inspection procedures and accept/reject criteria.						
1.1 C	- Inspect exterior for cracks, distortion, delamintion of reinforced plastic, and - Inspect air inlets for obstruction. - Inspect cockpit tub drain holes for blockage.	0.05	67T				

"FOD REMINDER"
Check work area for tools and parts after completion of maintenance inspection.

FIGURE 20. Example of periodic inspections based on flight hours.

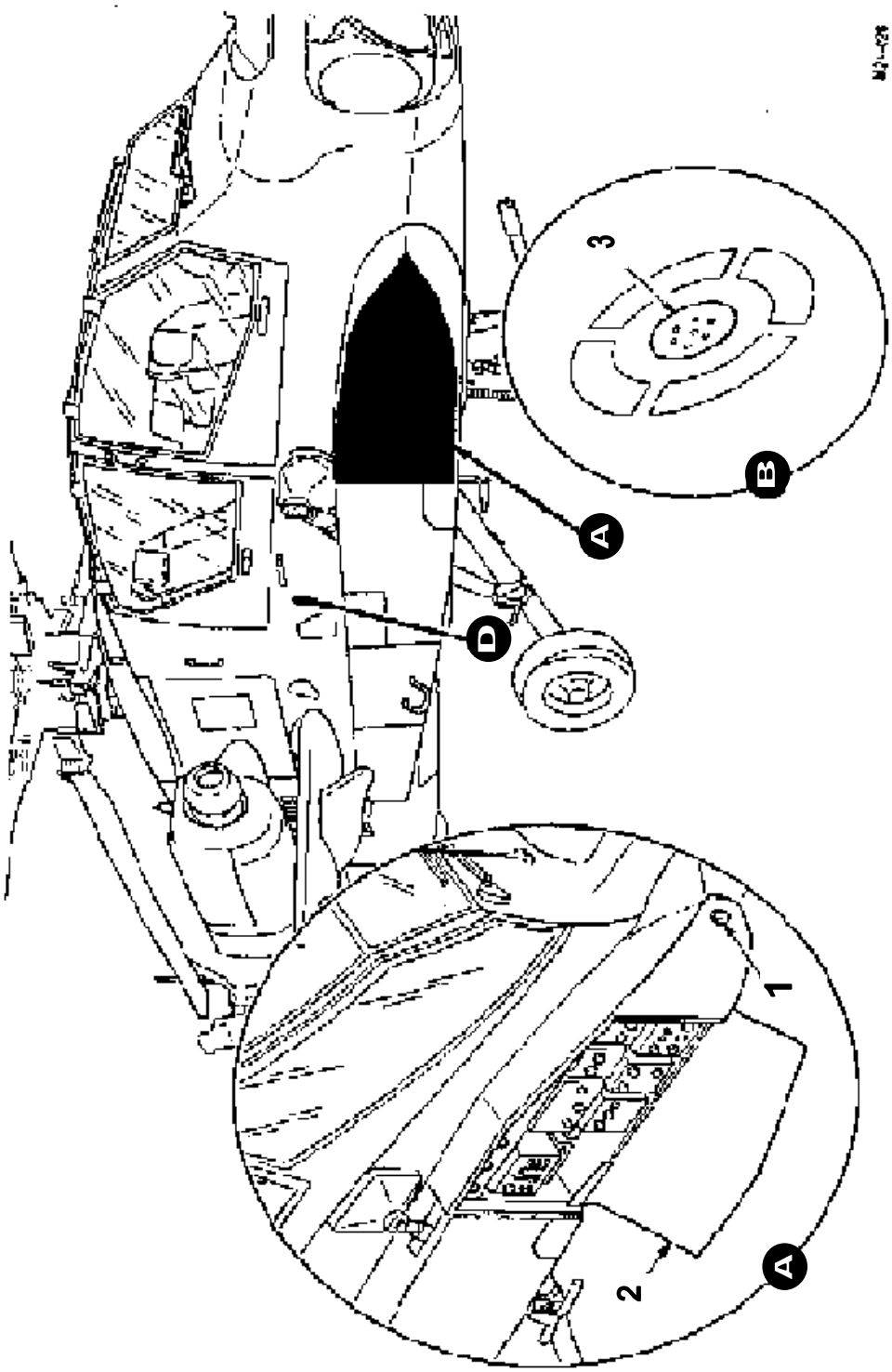

FIGURE 21. <u>Example of manhour/day interval inspection checklist with associated figure.</u>

Seq. No.	Location	Item and Procedure
		FUSELAGE - RIGHT SIDE FORWARD **POWER OFF**
1.1	---	Inspect aircraft forms and records for recorded discrepancies (DA PAM 738-751)
1.2	---	Exterior surfaces Skin areas for cracks and distortion Loose or missing hardware Access panels, doors, and fairings for mounting security Exposed hydraulic lines for leakage and chaffing Hydraulic connectors for security
1.3	1	Radar Warning Antenna Physical damage and mounting security
1.4	2	Open Avionics Door R90 Interior panels for cracks and cleanliness Loose or missing hardware Interior components for physical damage and mounting security Electrical connectors for security Visible wiring for chafing or damaged insulation and connection security Ammo conveyor for damaged or cracked carriers and tracks
1.5	3	**STATIC PORT** **OBSTRUCTIONS, CLEANLINESS, AND DAMAGE**

"FOR REMINDER"

Check work area for tools and parts after completion of maintenance and inspection.

TM 1-1520 -238-PMS

FIGURE 21. <u>Example of manhour/day interval inspection checklist with associated figure</u> - Continued.

TM X–XXXX–XXX-XX **1839 00**

UNIT MAINTENANCE

NOMENCLATURE OF EQUIPMENT
NSN, MODEL, PART NUMBER, EIC

AMMUNITION MARKING INFORMATION

INITIAL SETUP:

GENERAL

1. Ammunition for the M199 cannon is the separate loading type. The loading of each complete round into the cannon requires three separate operations: loading the fuzed projectile, the propelling charge, and the primer.
2. These components are shipped separately; therefore, the cannon crew must know how to store, unpack, inspect, prepare, and load each complete round every time the weapon is fired.
   a. The chief of section supervises the loading and the preparation duties performed by cannoneers.
   b. The chief of section must also see that the cannoneers and driver are cross-trained in the specific duties of the care, handling, unpacking, inspection, preparation, and loading of the ammunition components in order to sustain a 24-hour operation or to operate with a reduced crew.
3. It is planned that future ammo for all new 155mm weapons will be interchangeable. This will enable projectiles and propelling changes of one NATO nation to be fired from the 155mm weapons of all others. Current items of interchangeability are contained in Chapter 5.
4. For maintenance of ammunition, see TM 9-1300-251-20.

WARNING

Until safety and reliability testing is completed, the use of ammo other than prescribed in this manual is prohibited.

5. Refer to Work Package 0011 00 for information about the Loose Projectile Restraint System (LPRS). The LPRS is a divider rack for securing loose unfuzed projectiles for transportation in a field artillery companion vehicle.

1839 00-1

FIGURE 22. Example of an ammunition marking information work package.

Table 1. Authorized Projectile Fuze Combinations for 8-Inch Howitzer, M110A2 Cannon M201A1.

TYPE AND MODEL NUMBER OF PROJECTILE	FUZE										
	PD		MT		MTSQ			PROX(VT)		ET	
	M739 SERIES	M557	M572	M565	M564	M557 SERIES	M582 SERIES	M728	M732	M762	M767
Agent GB, VX, M426	X	X	X					X[2]	X[2]		
HE, M106 (Shallow Cavity)	X	X	X		X[3]		X		X		X
HE, M106 (Deep Cavity)	X	X	X		X[3]		X	X[4]	X		X
HE, M404 ICM				X		X				X	
HE, M509A1 ICM						X				X	
HERA, M650 (Rocket Only)	X	X	X								X
HERA, M650 (Rocket Only)[1]	X	X	X		X[3]		X		X		X

WARNING

[1]Do not fire the M650 projectile if the obturating band is missing or broken. If the band is displaced and can be repositioned and remain in the groove, the projectile can be fired.

NOTE

[2]M728 and M732 fired only with "VX" projectile and only in combat emergency.

[3] Fuze, MTSQ, M564 is restricted from firing with zone 9 M188A1 propelling charge.

[4] Authorized, requires removal of supplementary charge.

END OF WORK PACKAGE

FIGURE 22. Example of an ammunition marking information work package - Continued.

DMWR 9-2910-231 **0347 00**

DIRECT SUPPORT MAINTENANCE

NOMENCLATURE OF EQUIPMENT
NSN, MODEL, PART NUMBER, EIC

AIRCRAFT INVENTORY MASTER GUIDE

INITIAL SETUP:

INTRODUCTION

Scope

This work package includes a listing of all inventoriable items of installed and loose equipment authorized and required by the aircraft in performance of its mission. Refer to DA PAM 738-751 for applicable forms and records to use in performing the inventory.

SECURITY

Aircraft inventory records should be unclassified, but any classification of the contents, if necessary, should be in accordance with the existing security regulations.

INVENTORIABLE ITEMS

Modification kits which are reissued or distributed to using organizations for installation, and which are not immediately placed in use, shall be recorded on the aircraft s DA Form-2408-17, Aircraft Inventory Record, and identified as loose equipment until modification is complete. Refer to table 1 for a list of inventoriable items for the aircraft.

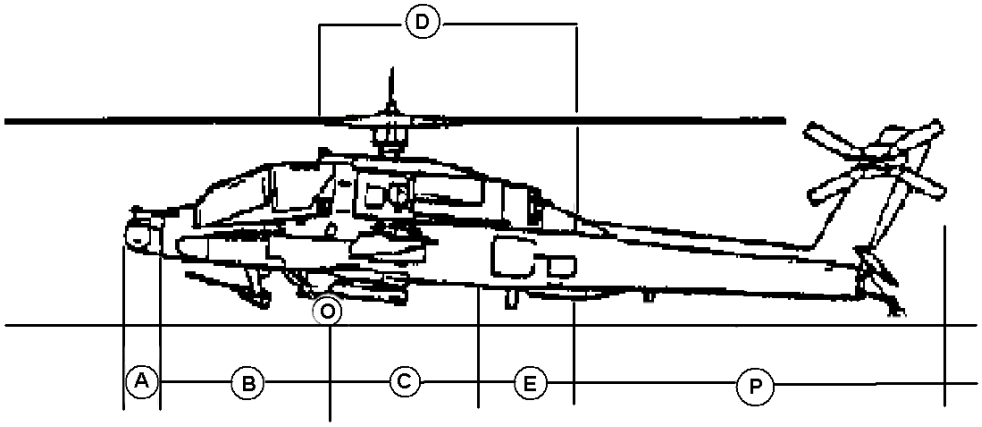

Figure 1. Aircraft Inventoriable Item Locator

0347 00-1

FIGURE 23. Example of a system theory of operation work package.

Table 1. Inventoriable Items.

NOMENCLATURE	PART NUMBER	NSN	QTY RQD
SECTION A - NOSE ELECTRONICS			
TADS Turret	130760000	1270-01-188-4138	1
PNVS Turret and Faring	130900000	1090-01-169-9415	1
Multiplex Terminal - Type 3	4032298-956	7025-01-210-7768	1
Signal Data Converter - Eng.	7-311C20019	6629-01-160-3518	1
Radar Jammer Transmit Antenna	SM-A-919685-2		1
Radar Warning Antenna	AS2891/APR-39V	1020-00-024-7608	2
Power Transformer	7-219510089	5950-01-186-8032	1
SECTION B - RIGHT FORWARD AVIONICS BAY			
Gun Control Box	7-317222500-603	1005-01-211-4165	1
Multiplex Terminal - Type 1	4032297-955	7025-01-211-0130	1
Turret Control Box	7-317222004	5930-01-239-2391	1
PNVS Electronics Box	13080274	4931-01-169-9369	1
Display Electronics - IHADSS	7-319430041	1270-01-183-0518	1
Sight Electronic Unit - IHADSS	7-319430031	1270-01-183-0519	1
Fire Control Computer	7-31900001	1430-01-211-0023	1
Remote Electronic Unit	7-317141001	1270-01-187-5778	1
Portable Fire Bottle	7-211180002-501	4210-00-555-8837	1
Electromagnet Relay	7-211B12033	5945-01-160-5639	1

PERIODS OF INVENTORY

Inventoriable items shall be checked against the Aircraft Inventory record, DA Form 2408-17, at the following periods:

1. Upon receipt.
2. Prior to transfer of the aircraft to another organization.
3. Upon placing aircraft in storage and upon removal from storage. Aircraft need not be inventoried while in storage.
4. Twelve months after last inventory.

FIGURE 23. Example of a system theory of operation work package - Continued.

DMWR 9-2910-231 **0025 00**

DEPOT MAINTENANCE
MAIN FUEL CONTROL
NSN 2910-01-339-0029, EIC XXX
FACILITIES

INITIAL SETUP:

FACILITIES

The Main Fuel Control (MFC) must be overhauled or maintained in an enclosed and controlled area. The following items are required and should be installed in the area for safety and the most expeditious execution of overhaul and maintenance procedures.

1. Facilities to perform parts cleaning and protective finishes application are required as follows:
   a. Well-ventilated areas for adequate protection when toxic chemical and flammable vapors are emitted during cleaning and repair operations.
   b. Emergency washing facilities for personnel who may accidentally become contaminated or endangered by contact with toxic or otherwise injurious materials.
   c. Sinks, containers, spray booths, and manipulating fixtures to facilities dip, spray, flushing, and air-dry methods of cleaning and application using: hydrocarbon solvents; corrosion preventative fingerprint remover (water displacing bath); chemical conversion materials for aluminum.
   d. A cold chest with a temperature range of 0 to -90 F (-17.8 to -67.71 C) is required for installation of interference fit parts.
   e. Oil flushing station capable of driving MFC pump to 1500 RPM and supplying flushing oil pressure to 25 psig (172.38 kPa). This station to include a gage capable of monitoring an MFC P1 pressure of 0-100 psi (0.689.50 kPa).
2. Hazardous area, for test and calibration operations, including adequate ventilation and fire protection.
3. Clean, dry, dust-free area for parts storage between overhaul/maintenance operations.

0025 00-1

FIGURE 24. Example of a facilities work package.

Table A.1 Page-Based TM Requirements Matrix for TM X-XXX-XXX-14&P

TM Content	-10	-12 -12&P	-13 -13&P	-14 -14&P	MIL-STD-40051 Reference	Element Name
FRONT MATTER	R	R	R	R	5.3.1	**<paper.frnt>**
Front cover	R	R	R	R	5.3.1.1	**<frntcover>**
Warning summary					5.3.1.2	**<warnsum>**
Change transmittal page				R	5.3.1.3	**<chgsheet>**
List of effective pages / work packages	R	R	R	R	5.3.1.4	**<loepwp>**
Title block page	R	R	R	R	5.3.1.5	**<titleblk>**
Table of contents	R	R	R	R	5.3.1.6	**<contents>**
How to use this manual	R	R	R	R	5.3.1.7	**<howtouse>**
CHAPTER 1. GENERAL INFORMATION, EQUIPMENT DESCRIPTION AND THEORY OF OPERATION	R	R	R	R	1-5.1	**<gim>**
GENERAL INFORMATION WORK PACKAGE	R	R	R	R	1-5.2	**<ginfowp>**
Scope	R	R	R	R	1-5.2.1	**<scope>**
Maintenance forms, records, and reports	R	R	R	R	1-5.2.3	**<mfrr>**
Reporting equipment improvement recommendations (EIR)	R	R	R	R	1-5.2.4	**<eir>**
Hand receipt (HR) manuals				NR	1-5.2.5	**<handreceipt>**
Corrosion prevention and control (CPC)	R	R	R	R	1-5.2.6	**<cpcdata>**
Ozone depleting substances (ODS)				R	1-5.2.7	**<odsdata>**
Destruction of Army materiel to prevent enemy use	R	R	R	R	1-5.2.8	**<destructmat>**
Preparation for storage or shipment	R	R	R	R	1-5.2.9	**<pssref>**
Warranty information				R	1-5.2.10	**<wrntyref>**
Nomenclature cross-reference list				O	1-5.2.11	**<nomenreflist>**
List of abbreviations/acronyms	R	R	R	R	1-5.2.12	**<loa>**
Quality of material	R	R	R	R	1-5.2.14	**<qual.mat.info>**
Safety, care, and handling	R	R	R	R	1-5.2.15	**<sftyinfo>**
Nuclear hardness				O	1-5.2.16	**<hcp>**
Calibration				NR	1-5.2.17	**<calref>**
Copyright credit line				NR	1-5.2.23	**<copyrt>**
Supporting information for repair parts, special tools, TMDE, and support equipment	NR			NR	1-5.2.24	**<supdata>**

FIGURE 25. Partial sample of a filled-out content selection matrix.

Table A.2 Page-Based TM Requirements Matrix for TM X-XXX-XXX-14&P

TM Content	-10	-12 -12&P	-13 -13&P	-14 -14&P	MIL-STD-40051 Reference	Element Name
EQUIPMENT DESCRIPTION AND DATA WORK PACKAGE	R	R	R	R	1-5.3	**<descwp>**
Equipment characteristics, capabilities, and features	R	R	R	R	1-5.3.1	**<eqpinfo>**
Location and description of major components	R	R	R	R	1-5.3.2	**<locdesc>**
Differences between models				R	1-5.3.3	**<eqpdiff>**
Equipment data	R	R	R	R	1-5.3.4	**<eqpdata>**
Equipment configuration				R	1-5.3.5	**<eqpconfig>**
THEORY OF OPERATION WORK PACKAGE	R	R	R	R	1-5.4	**<thrywp>**
CHAPTER X. OPERATOR INSTRUCTIONS	R	R	R	R	2-5.1	**<opim>**
DESCRIPTION AND USE OF OPERATOR CONTROLS AND INDICATORS WORK PACKAGE	R	R	R	R	2-5.2.2.2	**<ctrlindwp>**
OPERATION UNDER USUAL CONDITIONS WORK PACKAGE	R	R	R	R	2-5.2.2.3	**<opusualwp>**
Security measures for electronic data	R	R	R	R	2-5.2.2.3.1	**<secref>**
Siting requirements					2-5.2.2.3.2	**<site>**
Shelter requirements					2-5.2.2.3.3	**<shelter>**
Assembly and preparation for use					2-5.2.2.3.4	**<prepforuse>**
Initial adjustments, before use and self-test					2-5.2.2.3.5	**<initial>**
Operating procedures	R	R	R	R	2-5.2.2.3.6	**<oper>**
Decals and instruction plates					2-5.2.2.3.6.2	**<instructplt>**
Operating auxiliary equipment					2-5.2.2.3.7	**<operaux>**
Preparation for movement					2-5.2.2.3.8	**<prepmove>**
OPERATION UNDER UNUSUAL CONDITIONS WORK PACKAGE	R	R	R	R	2-5.2.2.4	**<opunuwp>**
Security measures for electronic data	R	R	R	R	2-5.2.2.4.1	**<secref>**
Unusual environment / weather	R	R	R	R	2-5.2.2.4.2	**<unusualenv>**
Fording and swimming					2-5.2.2.4.3	**<fording>**
Interim nuclear, biological, and chemical (NBC) decontamination procedures					2-5.2.2.4.4	**<decon>**
Jamming and electronic countermeasures (ECM) procedures					2-5.2.2.4.5	**<ecm>**

FIGURE 25. Partial sample of a filled-out content selection matrix - Continued.

Table A.3 Page-Based TM Requirements Matrix for TM X-XXX-XXX-14&P

TM Content	-10	-12 -12&P	-13 -13&P	-14 -14&P	MIL-STD-40051 Reference	Element Name
Emergency procedures	R	R	R	R	2-5.2.2.4.6	**<emergency>**
STOWAGE AND DECAL / DATA PLATE GUIDE WORK PACKAGE				NR	2-5.2.2.5	**<stowagewp>**
ON-VEHICLE EQUIPMENT LOADING PLAN WORK PACKAGE				NR	2-5.2.2.6	**<eqploadwp>**
CHAPTER X. TROUBLESHOOTING PROCEDURES		R	R	R	3-5.3	**<tim>**
TROUBLESHOOTING INDEX WORK PACKAGE				R	3-5.3.3.2	**<tsindxwp>**
OPERATIONAL CHECKOUT WORK PACKAGES					3-5.3.3.6.3	**<opcheckwp>**
TROUBLESHOOTING PROCEDURES WORK PACKAGES					3-5.3.3.6.4	**<tswp>**
OPERATIONAL CHECKOUT AND TROUBLESHOOTING PROCEDURES WORK PACKAGES					3-5.3.3.6.5	**<opcheck-tswp>**
CHAPTER X. MAINTENANCE INSTRUCTIONS	R	R	R	R	4-5.3	**<mim>**
SERVICE UPON RECEIPT WORK PACKAGE	NR	R	R	R	4-5.3.2.1	**<surwp>**
Siting	NR				4-5.3.2.1.1	**<siting>**
Shelter requirements	NR				4-5.3.2.1.2	**<shltr>**
Service upon receipt of materiel	NR				4-5.3.2.1.3	**<surmat>**
Installation instructions	NR				4-5.3.2.1.4	**<install>**
Preliminary servicing of equipment	NR				4-5.3.2.1.5	**<preserv>**
Preliminary checks and adjustment of equipment	NR				4-5.3.2.1.6	**<prechkadj>**
Preliminary calibration of equipment	NR				4-5.3.2.1.7	**<precal>**
Circuit alignment	NR				4-5.3.2.1.8	**<calign>**
Ammunition markings	NR				4-5.3.2.1.9	**<ammo.markings>**
Classification of defects	NR				4-5.3.2.1.10	**<ammo.defect>**
Ammunition handling	NR				4-5.3.2.1.11	**<ammo.handling>**
Procedures to activate ammunition	NR				4-5.3.2.1.12	**<arm>**
EQUIPMENT / USER FITTING INSTRUCTIONS WORK PACKAGE (PERSONAL USE EQUIPMENT)	NR			NR	4-5.3.2.2	**<perseqpwp>**

FIGURE 25. Partial sample of a filled-out content selection matrix - Continued.

```
<ammo.markingwp wpno="M03456-9-2350-314">
<wpidinfo>
<maintlvl level="operator">
<eicnomen><sysnomen>
<name>155 MM, M284 HOWITZER CANNON</name>
<nsn><fsc>XXXX</fsc><niin>XX-XXX-XXXX</niin></nsn>
<eic>xxx</eic>
</sysnomen></eicnomen>
<title>CARE, HANDLING, STORAGE, INSPECTION AND CLEANING</title></wpidinfo>
<wpinfo>
<mtrlpart><mtrlpart-setup-item>
<name>Cloth, wiping</name><partno>XXX-XXXX</partno><cageno>XXXXX</cageno>
<itemref><xref wpid="S00034-9-2350-314" itemid="S00034-9-2350-314-
    0031"></itemref></mtrlpart-setup-item></mtrlpart></wpinfo>
<ammo.handling><title></title>
<ammo.unpacking><title>Care</title>
<proc>
<step1><para>Ammunition is packaged to withstand conditions ordinarily
    encountered in the field. Keep packing boxes from becoming broken or
    damaged.</para></step1>
<step1><para>Since ammunition is impaired by moisture, frost, extreme
    temperature, and foreign matter (mud, oil, etc.), observe the
    following:</para>
<step2><para>Do not break the moisture-resistant seal on the container until
    ammunition is to be used.</para></step2>
<step2><para>Shield all ammunition from high temperatures (e.g., the direct
    rays of the sun). When covering projectiles to provide this shield, cover
    with tarpaulin keeping 18 in. (45.7 cm) air space over and 6 in. (15.2 cm)
    of air space on sides. This will ensure free air flow necessary to keep the
    projectiles cooler in hot weather.</para></step2>
<step2> <para> Refer to <xref wpid="m00932-9-2350-314"> for information
    regarding maintenance of the M712 Copperhead (HEAT) projectile.
    </para></step2>
<step2><para>Store M110 projectile in an upright position at all
    times.</para></step2></step1></proc>
<proc>
<title>Handling</title>
<step1>
<specpara>
<warning>
<trim.para>Keep fire and flammable materials out of the ammunition areas. There
    will be no smoking in the vicinity of ammunition. </trim.para>
<trim.para>Shield all ammunition from high temperatures (e.g., direct rays of
    the sun). When outside temperature is expected to reach +100&deg; F
    (+38&deg; C), failure to shade could result in damage to material and loss
    of life.</trim.para>
</warning>
<para>Do not expose ammunition and components containing explosives to extreme
    temperatures. Do not expose to direct sunlight, flame, or other sources of
    heat. </para>
</specpara></step1>
```

EXAMPLE OF A SOURCE FILE

FIGURE 26. Example of an XML source file.

```
<step1><para>Do not expose unpacked propelling charges and fuzes to rain,
    excessive humidity, or ground moisture. </para></step1>
<step1><para>Prevent rough handling of projectiles and fuzes. Do not strike
    projectiles together and do not offload ammunition by dropping projectiles
    on top of projectiles. </para></step1>
<step1><para>Protect fuzes, primers, and flash reducers at all times from
    foreign matter and impact. A drop of 4 feet (1.20 m) may cause the
    electrolyte vital in a VT fuze battery to break, thus causing a
    dud.</para></step1>
<step1><para>Do not disassemble fuzes.</para></step1></proc></ammo.unpacking>
<ammo.packing>
<title>Temperature Limits</title>
<proc>
<step1>
<specpara>
<warning>
<trim.para>Ammunition exposed directly to sunlight, or in unventilated
    containers, enclosures, shelters, freight cars, closed vehicles, and similar
    structures exposed to direct sunlight may reach temperatures exceeding upper
    storage limits. Avoid exposure of ammunition components to direct sunlight.
    Do not store ammunition assembled with tetrytol-loaded bursters (i.e.,
    projectiles, 155mm; smoke, WP, M110; gas H, and HD, persistent, M110) at
    temperatures exceeding +125&deg; F (+52&deg; C)</trim.para></warning>
<para>Except as otherwise specified, observe the following limits:
    </para></specpara>
<step2><para>Lower limit is -80&deg; F (-62&deg; C) for a period of not more
    than 3 days.</para></step2>
<step2><para>Upper limit is +160&deg; F (+71&deg; C) for a period of not more
    than 4 hours per day.</para></step2></step1>
<step1><para>Store or transport M110 projectiles containing WP at a temperature
    below the melting point (+111.4&deg; F (+44&deg; C) of the WP filler. If
    this is not practicable, store or transport such projectiles on their bases
    so that, should the WP filler melt, it will resolidify with the void in the
    nose of the projectile. This restriction does not apply to the M825/M825A1
    WP projectile.</para></step1>
<step1>
<para>Protect proximity fuzes and proximity rounds from long exposure to high
    humidity. Store M728 and M732 fuzes in temperatures between -65&deg; F to
    +145&deg; F (-54&deg; C to +63&deg; C) and 0&deg; F to +120&deg; F (-18&deg;
    C to +49&deg; C) for the M514 series.</para></step1>
</proc></ammo.packing></ammo.handling></ammo.markingwp>
```

EXAMPLE OF A SOURCE FILE - Continued

FIGURE 26. Example of an XML source file - Continued.

OPERATOR MAINTENANCE

155 MM, M284 HOWITZER CANNON

NSN XXXX-XX-XXX-XXXX, EIC XXX

CARE, HANDLING, STORAGE, INSPECTION AND CLEANING AMMUNITION MAINTENANCE

INITIAL SETUP:

Materials/Parts

Cloth, wiping (Item 31, WP 0479 00)

Handling Ammunition

Unpacking Ammunition

CARE

1. Ammunition is packaged to withstand conditions ordinarily encountered in the field. Keep packing boxes from becoming broken or damaged.
2. Since ammunition is impaired by moisture, frost, extreme temperature, and foreign matter (mud, oil, etc.), observe the following:
   a. Do not break the moisture-resistant seal on the container until ammunition is to be used.
   b. Shield all ammunition from high temperatures (e.g., the direct rays of the sun). When covering projectiles to provide this shield, cover with tarpaulin keeping 18 in. (45.7 cm) air space over and 6 in. (15.2 cm) of air space on sides. This will ensure free air flow necessary to keep the projectiles cooler in hot weather.
   c. Refer to WP for information regarding maintenance of the M712 Copperhead (HEAT) projectile.
   d. Store M110 projectile in an upright position at all times.

HANDLING

WARNING

Keep fire and flammable materials out of the ammunition areas. There will be no smoking in the vicinity of ammunition.
Shield all ammunition from high temperatures (e.g., direct rays of the sun). When outside temperature is expected to reach +100° F (+38° C), failure to shade could result in damage to material and loss of life.

1. Do not expose ammunition and components containing explosives to extreme temperatures. Do not expose to direct sunlight, flame, or other sources of heat.
2. Do not expose unpacked propelling charges and fuzes to rain, excessive humidity, or ground moisture.
3. Prevent rough handling of projectiles and fuzes. Do not strike projectiles together and do not offload ammunition by dropping projectiles on top of projectiles.

FIGURE 26. Example of an XML source file - Continued.

4. Protect fuzes, primers, and flash reducers at all times from foreign matter and impact. A drop of 4 feet (1.20 m) may cause the electrolyte vital in a VT fuze battery to break, thus causing a dud.

5. Do not disassemble fuzes.

Packing Ammunition

TEMPERATURE LIMITS

WARNING

Ammunition exposed directly to sunlight, or in unventilated containers, enclosures, shelters, freight cars, closed vehicles, and similar structures exposed to direct sunlight may reach temperatures exceeding upper storage limits. Avoid exposure of ammunition components to direct sunlight. Do not store ammunition assembled with tetrytol-loaded bursters (i.e., projectiles, 155mm; smoke, WP, M110; gas H, and HD, persistent, M110) at temperatures exceeding +125° F (+52° C)

1. Except as otherwise specified, observe the following limits:
   a. Lower limit is -80° F (-62° C) for a period of not more than 3 days.
   b. Upper limit is +160° F (+71° C) for a period of not more than 4 hours per day.

2. Store or transport M110 projectiles containing WP at a temperature below the melting point (+111.4° F (+44° C) of the WP filler. If this is not practicable, store or transport such projectiles on their bases so that, should the WP filler melt, it will resolidify with the void in the nose of the projectile. This restriction does not apply to the M825/M825A1 WP projectile.

3. Protect proximity fuzes and proximity rounds from long exposure to high humidity. Store M728 and M732 fuzes in temperatures between -65° F to +145° F (-54° C to +63° C) and 0° F to +120° F (-18° C to +49° C) for the M514 series.

END OF WORK PACKAGE

FIGURE 26. Example of an XML source file - Continued.

Table 3. Signal Amplitude and Duration.

SIGNAL NAME	AMPLITUDE	DURATION
1. xxxxxxxxxxxxx	xxxxxxxxxxxxxxx	xxxxxxxxxxxxx
2. xxxxxxxxxx[1]	xxxxxxxxxxxxxxxxx xxxxxxxxxxxxxxx	xxxxxx[2]

[1] xxxxxxxxxxxxxxxxxxxxxxxxxxxxxxxxxxxxxxxxxxxxxxxxx.

[2] xxxxxxxxxxxxxxxxxxxx

Tightening Metal Fasteners

When torquing a fastener, select a wrench whose range fits the required torque value. A torque wrench is most accurate from 25% to 75% of its stated range. A wrench with a stated range of 0 to 100 pound-feet (0- 135 N-m) will be most accurate from 25 to 75 pound-feet (33.8-101.3 N-m). The accuracy of readings will decrease as you approach 0 pound-feet (0 N-m) or 100 pound-feet (135 N-m). The following ranges are based on this principle:

Stated Range	**Most Effective Range**
0-200 lb-in. (0-22.6 N-m)	4-13 lb-ft (5.4-17.6 N-m)
0-600 lb-ft (0-810.0 N-m)	50-450 lb-ft (67.5-607.5 N-m)
0-170 lb-ft (0-229.5 N-m)	44-131 lb-ft (59.4-176.9 N-m)
15-75 lb-ft (20.3-101.3 N-m)	30-60 lb-ft (40.5-81.0 N-m)

TABULAR INFORMATION (NOT LABELED AS A TABLE)

= = = =

Check the following for damage during shipment:

Tool Box Cabinet and Tool Kits.
Drawer Assembly.
Filing Cabinet, Security.
Rifle Mount Assembly.
Cabinet Assembly.
Shelf Assembly-wall.
Shelf Assembly-wall.
Radio.

RANDOM LIST

= = = =

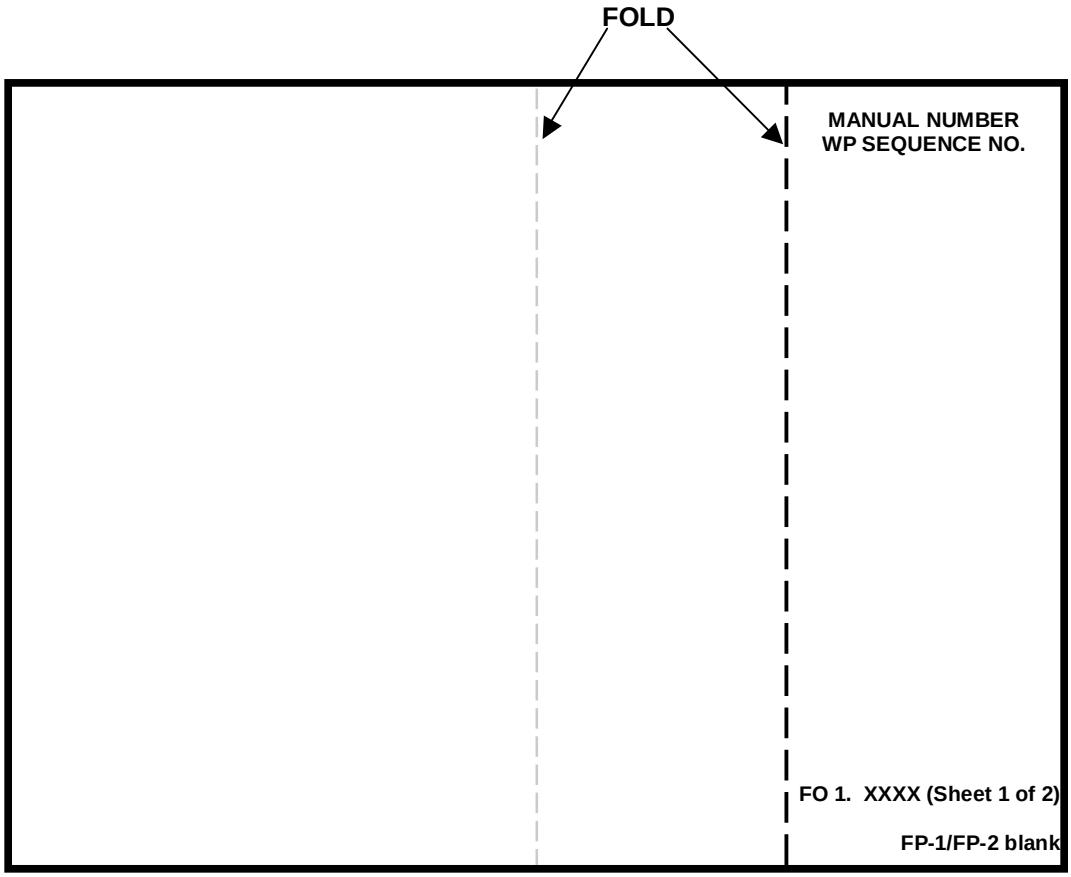

FIGURE 29. <u>Example of a foldout page.</u>

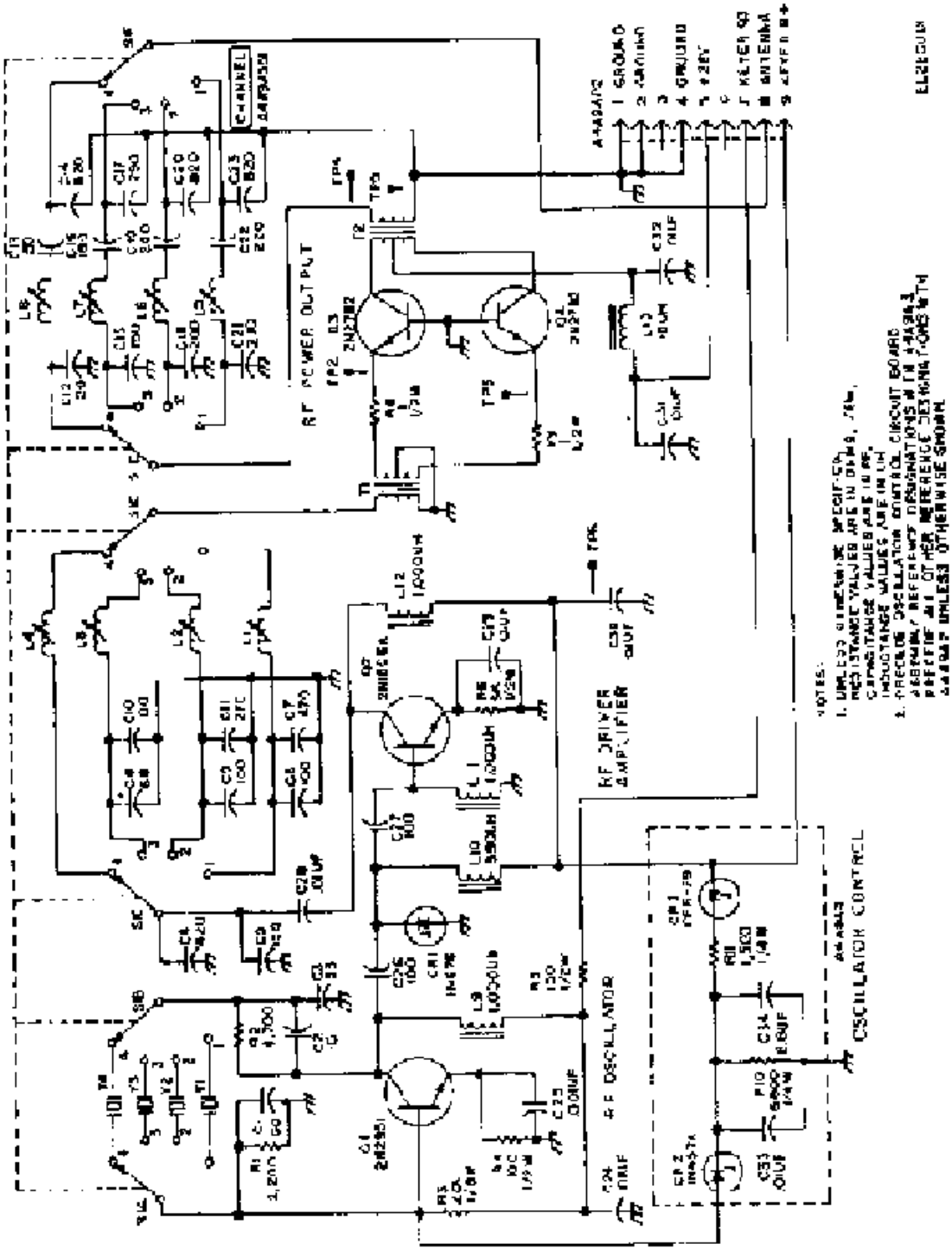

Figure 5. Schematic for Radio Frequency Oscillator.

FIGURE 30. <u>Example of a figure rotated 90 degrees.</u>

SAFETY WARNING

9. Secure locknut cylinder (figure 3, item 1) to hull with three washers (figure 3, item 2), and bolts (figure 3, item 3). Using torque wrench tighten bolts to 315 - 325 lb ft (427-441 N.m) torque.

WARNING

If road wheel lifter slips you could get severely injured by carrier track. Keep feet clear of track when using road wheel lifter.

10. Install road lifter. Lower carrier and remove jack from under carrier.

==========

HAZARDOUS MATERIAL WARNING

7. Slowly discharge pressure to 0 pig by closing shutoff valve and opening biased valve.

WARNING

Fluorinated compound OT20 is an irritant to the eyes and skin. Use safety glasses and latex gloves or barrier cream. Keep sparks, flames, and heat away. Keep grease off skin, eyes, and clothes.

8. Remove plug and O-ring from adapter (figure 5, item 37) orifice. Lubricate seal (figure 5, item 36) with fluorinated compound OT20 and install seal and relief valve (figure 5, item 35) in adapter.

==========

ABBREVIATED HAZARDOUS MATERIAL WARNING (THIS FORMAT MAY BE USED FOR COMMONLY USED SUBSTANCES. COMPLETE EXPLANATION OF WARNING IS PLACED IN WARNING SUMMARY.)

8. Insert plug connector kits wiring (figure 2, item 7) and (figure 2, item 8) and contacts/wiring (figure 2, item 9), (figure 2, item 10), and (figure 2, item 11) through electrical cable clamps kit (figure 2, item 5) or (figure 2, item 6) and appropriate capsule cable entry tube. Maintain wire lists.

WARNING

ISOPROPYL ALCOHOL,
TT-I-735

9. Isopropyl alcohol (item 5, WP 0062 00) may be used as a lubricant during insertion and removal of contacts. Apply isopropyl alcohol by brushing on capsule insert or by dipping contact or tool.

FIGURE 31. <u>Example of placement of warning icons in a procedure.</u>

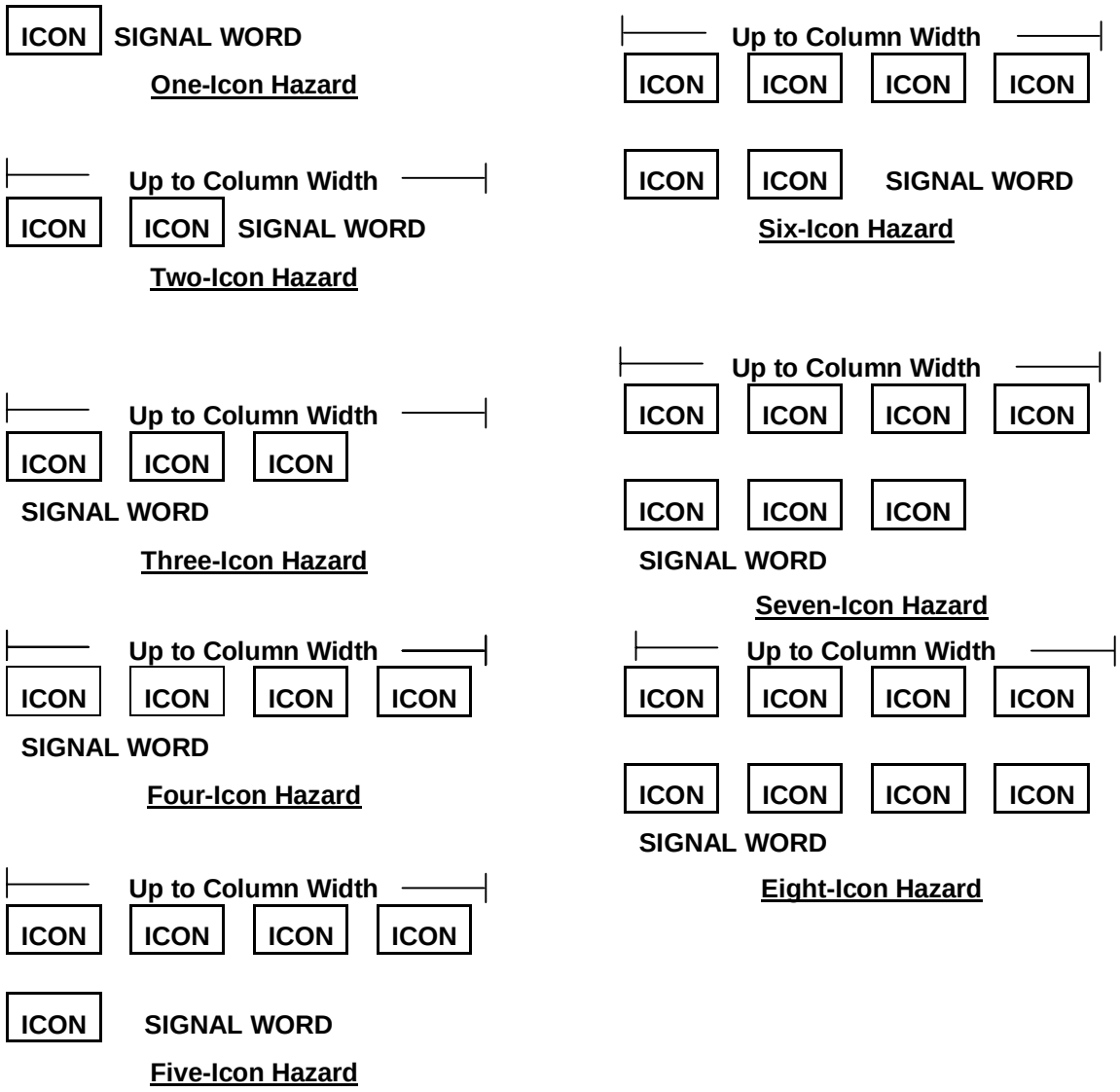

FIGURE 31. Example of placement of warning icons in a procedure - Continued.

WARNING SUMMARY

This warning summary contains general safety warnings and hazardous materials warnings that must be understood and applied during operation and maintenance of this equipment. Failure to observe these precautions could result in serious injury or death to personnel. Also included are explanations of safety and hazardous materials icons used within the technical manual.

EXPLANATION OF SAFETY WARNING ICONS

ELECTRICAL - electrical wire to hand with electricity symbol running through hand shows that shock hazard is present.

HEAVY OBJECT - human figure stooping over heavy object shows physical injury potential from improper lifting technique.

GENERAL SAFETY WARNINGS DESCRIPTION

WARNING

Whenever possible shut off system power before beginning work on equipment.

Do not come in contact with electrical connectors.

Don’t be misled by low voltage. Low potentials can be dangerous.

Do not work on electrical equipment alone. Be sure another person is nearby who can give first aid.

WARNING

Some objects covered in this manual are heavy and need two soldiers to lift them.

EXPLANATION OF HAZARDOUS MATERIALS ICONS

CHEMICAL - drops of liquid on hand shows that the material will cause burns or irritation to human skin or tissue.

FIGURE 32. Example of warning icons in a warning summary.

EXPLANATION OF HAZARDOUS MATERIALS ICONS - Continued

VAPOR - human figure in a cloud shows that material vapors present a danger to life or health.

FIRE - flame shows that a material may ignite and cause burns.

EYE PROTECTION - person with goggles shows that the material will injure the eyes.

HAZARDOUS MATERIALS DESCRIPTION

WARNING

DRYCLEANING SOLVENT P-D-680

P-D-680 solvent vapors are toxic. Avoid prolonged or repeated breathing of vapors or solvent contact with skin. Use only with adequate ventilation. Solvent is flammable and should not be used near open flame. Fire extinguishers should be readily available when solvent is used.

FIGURE 32. Example of warning icons in a warning summary - Continued.

TORQUE LIMITS

How To Use Torque Tables

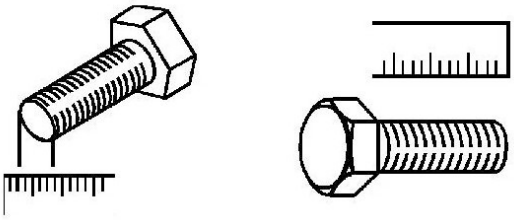

1. Measure the diameter of the screw you are installing.

2. Count the number of threads per inch or use a pitch grade.

3. Under the heading SIZE, look down the left-hand column until you find the diameter of the screw you are installing. (There will usually be two lines beginning with the same size.)

4. In the second column under SIZE, find the number of threads per inch that matches the number of threads you counted in step 2. (Not required for metric screws.)

INCORRECT

==========

TORQUE LIMITS

How To Use Torque Tables

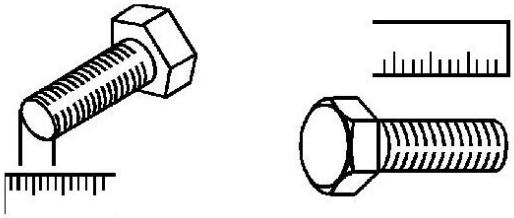

Figure 3. Measuring the Diameter of a Screw.

1. Measure the diameter of the screw you are installing.

2. Count the number of threads per inch or use a pitch grade.

3. Under the heading SIZE, look down the left-hand column until you find the diameter of the screw you are installing. (There will usually be two lines beginning with the same size.)

4. In the second column under SIZE, find the number of threads per inch that matches the number of threads you counted in step 2. (Not required for metric screws.)

CORRECT

FIGURE 33. <u>Example of incorrect (wrapped text) and correct text placement with an illustration.</u>

REMOVAL

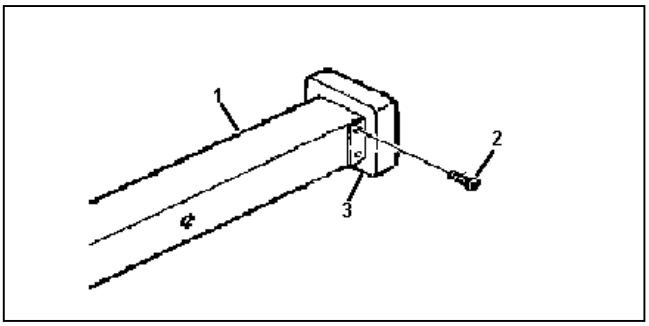

Figure 4. Removal of Screws.

1. Remove four screws (Figure 4, Item 2) securing end guard (Figure 4, Item 3) to beam (Figure 4, Item 1) .

2. Remove end guard (Figure 4, Item 3) and discard.

"ABOVE" PLACEMENT OPTION

==========

INSTALLATION

1. Install end guard (Figure 5, Item 3) over beam (Figure 5, Item 1) and align screw holes.

2. Install screws (Figure 5, Item 2)

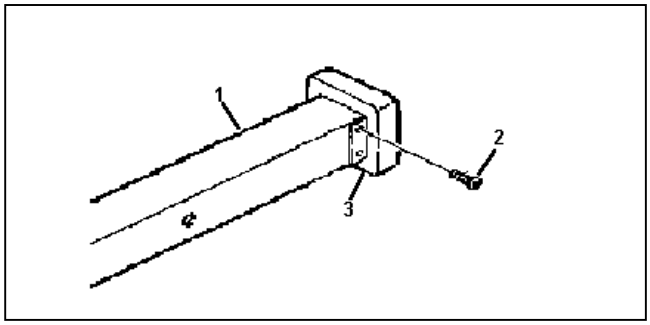

Figure 5. Installing End Guard.

"BELOW" PLACEMENT OPTION

FIGURE 34. <u>Example of digital illustration.</u>

Similarly, the mass leaving the shock front is:

$$m_1 = p_1 V_1$$

$$m_1 = p_1 A L_1$$

$$m_1 = p_1 A t\ (v - u_1) \qquad \text{EQ 10}$$

Invoking the principle of conversation of mass:

$$m_0 = m_1$$

$$p_0 A t\ (v - u_0) = p_1 A t\ (v - u_1)$$

$$p_0 (v - u_0) = p_1 (v - u_1) \qquad \text{EQ 11}$$

EXAMPLE A

==========

Equating the work done on the system with the rate of energy increases and canceling the t's:

$$p_1 u_1 A - p_0 u_0 A =$$

$$A p_1\ (v - u_1)(e_1 - 0.5 u_1^2) - a p_0 (v - u_0)(e_0\ 0.5_0 2)$$

EXAMPLE B

==========

Cylinder Expansion Test

An important problem faced by the designer of fragmentation warheads is that he must maximize the energy which is transferred from explosive to metal during the detonation. The most frequently encountered configuration is that of an explosive-filled metal cylinder detonated by a wave moving axially. The best scaling law that has been devised for this condition is that of Gurney, who disregarded detonation conditions and shock effects in the metal assumed implicitly that all the energy of the explosive is conserved. His equation for the cylinders is:

$$V = \sqrt{2E\left(\frac{C/M}{1 + 0.5\ C/M}\right)}$$

where v is the velocity to which the metal is accelerated by the explosive, E is the unit energy content of the explosive, C is the weight of the explosive, and M is the metal weight. The expression of velocity in terms of C/M implies that weight-ration scaling of explosive and metal is of prime importance and that dimensional scaling need not be considered at all. The term 2E has the dimensions of a velocity as was pointed out by Gurney in his original report.

EXAMPLE C

FIGURE 35. <u>Example of equations.</u>

Recovery can be accomplished by adding dilute acetic acid, but the product obtained will be impure. The heat of formation at constant pressure is -112 to 126.3 kilocalories per mote. The calculated heat of detonation is 0.367 kilocalories per gram. Lead azide is used extensively as an ingredient in initating compositions.

*[N = N = N] - Pb** [N = N = N] -*

EXAMPLE D

==========

In the manufacturing process ethyl nitrate ($C_2H_5ONO_2$), ethyl nitrite (C_2H_5ONO), and nitroethane (C_2H_5NO) also are produced. The immediate products of oxidation and nitration involved in the preparation of mercury fulminate are as follows:

$CH_3.CH_2OH \rightarrow CH_3CHO \rightarrow$
Ethanol Acetaldeyde

EXAMPLE E

==========

Two equation are given for the specific heat of PETN as a function of temperature:

$C = 0.257 + (5.21 \times 10^4)T$ *for* $T < 140^\circ C$
and $C = 0.239 + (8.0 \times 10^4)T$ *for* $32^\circ C < T < 127^\circ C$

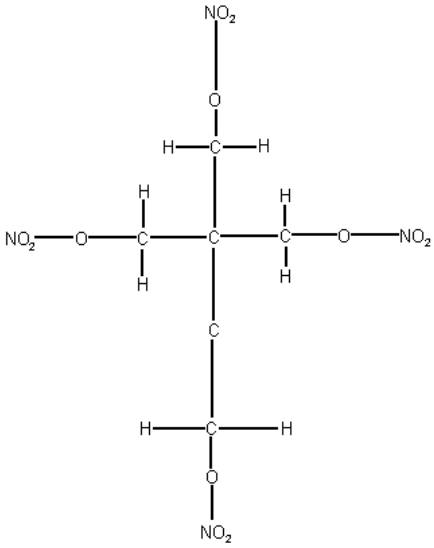

EXAMPLE F

==========

FIGURE 35. <u>Example of equations</u> - Continued.

In a given amount of time, t, mass moves from one side of the shock front to the other side. By definition, mass, m, is given as function of density, p, and volume, V, by the equation:

$$m = pV \qquad \text{EQ 1}$$

The volume, can be expressed in terms of area, A, and length, L, by the equation:

$$V = AL \qquad \text{EQ 2}$$

The length, L, is the distance a particle travels in our assumed time interval, t, times the velocity, v:

$$L = tv \qquad \text{EQ 3}$$

By figure 3 the velocity can be seen to equal:

$$v_0 = (v - u_0) \qquad \text{EQ 4}$$

and

$$v_1 = (v - u_1) \qquad \text{EQ 5}$$

==========

By equations 1 through 5:

momentum change/t - $[p_1 At\ u_1\ (v - u_1) - p_0 At\ u_0\ (v - u_0)/t$

EQ 9

FIGURE 36. <u>Example of numbering equations.</u>

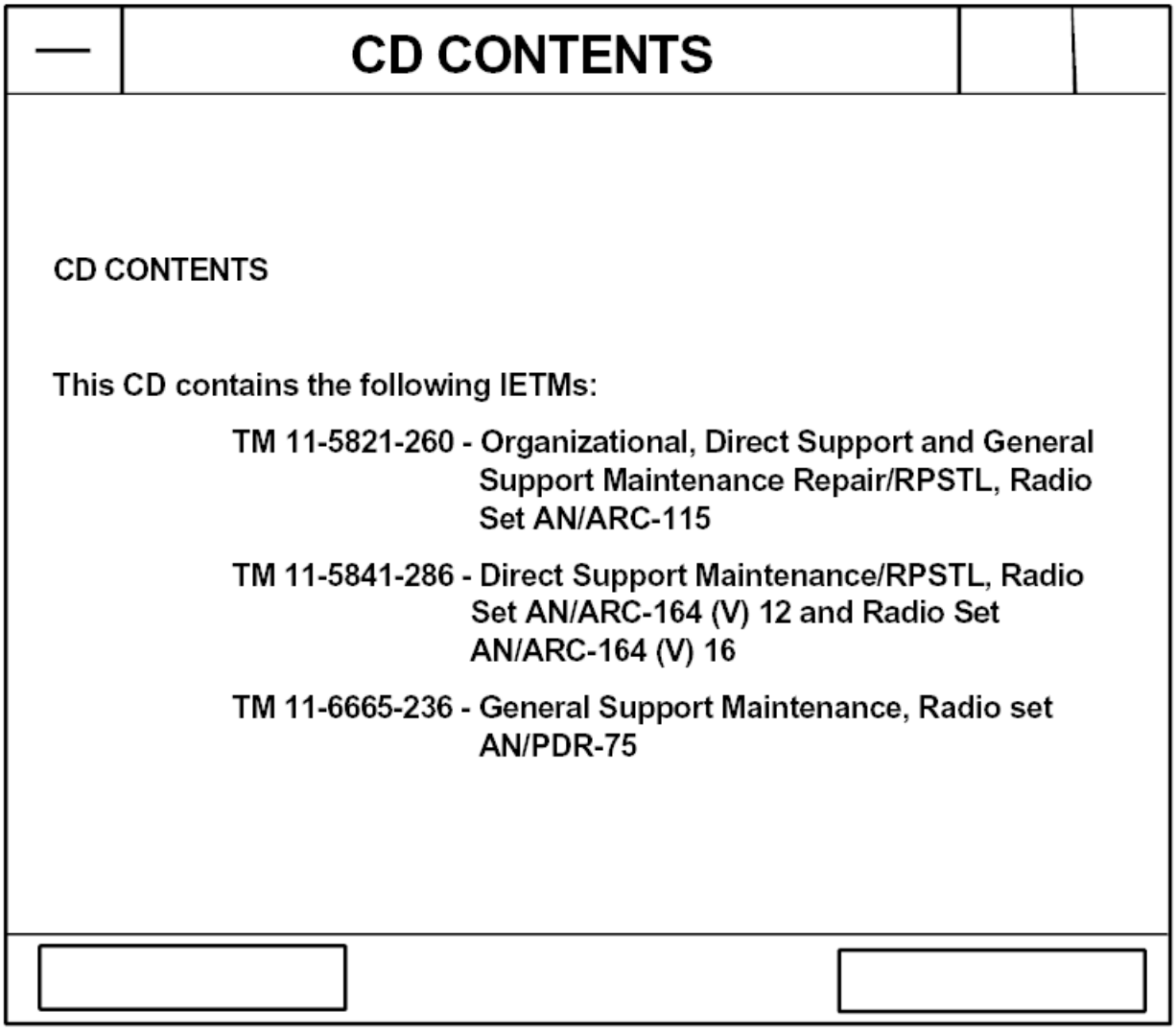

NOTE: See Figure 38 for assembly guidance

FIGURE 37. Example of a CD content frame.

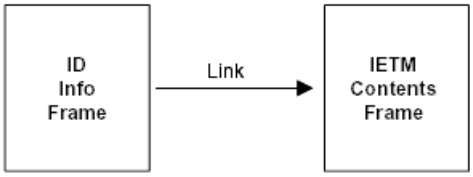

CD with 1 new IETM

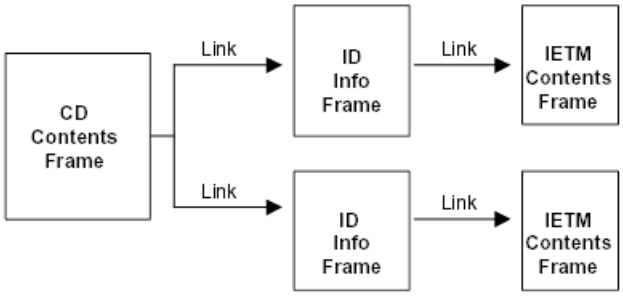

CD with multiple new IETMs

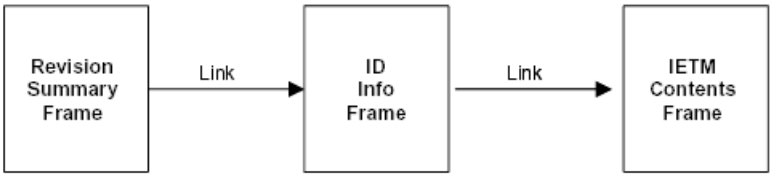

CD with 1 IETM (revised)

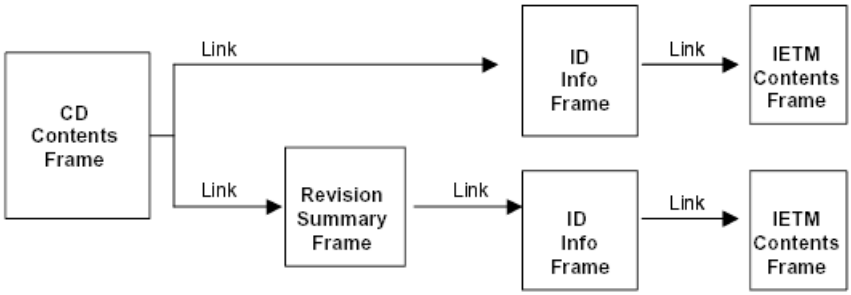

CD with multiple new IETMs with at least one revised

FIGURE 38. <u>Examples of assembly of introductory frames.</u>

REVISION SUMMARY

REVISION SUMMARY

The following work packages have been changed in this IETM:

WP TITLE	REASONS FOR CHANGE
Generator Assembly AM1 Removal and Installation.	Addition of a new electrical connector.
10-AMP Cold Start System Circuit Breaker on Driver Lip Shuts Off Troubleshooting.	Additional test equipment required to perform Troubleshooting.

NOTE: See Figure 38 for assembly guidance

FIGURE 39. Example of a revision summary frame.

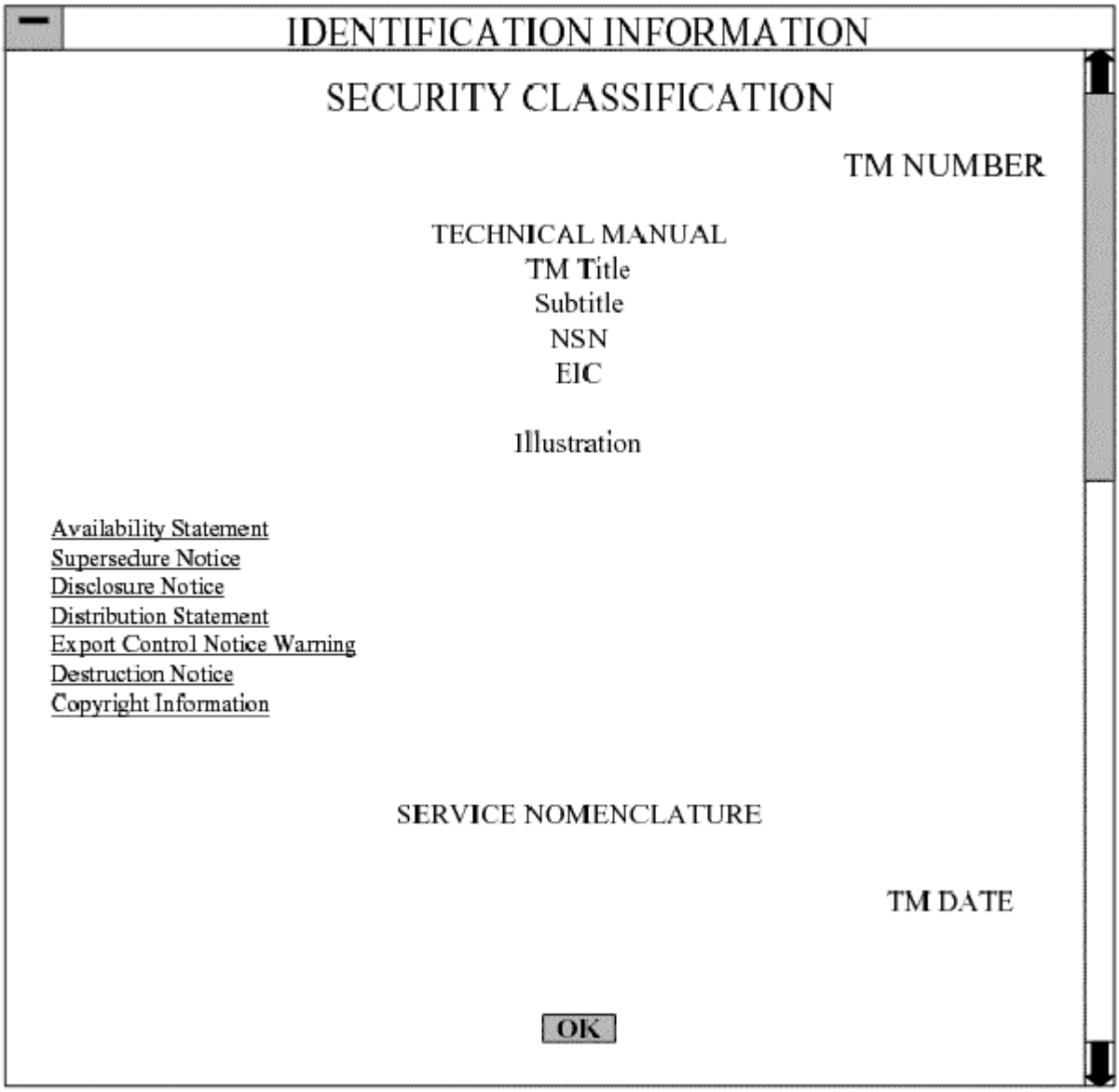

NOTE: See Figure 38 for assembly guidance

FIGURE 40. Example of identification information (title frame).

IDENTIFICATION INFORMATION

SECURITY CLASSIFICATION

DMWR NUMBER

DEPOT MAINTENANCE WORK REQUIREMENT
Containing National Overhaul Standards for
DMWR Title
Subtitle
NSN
EIC

Illustration

Availability Statement
Supersedure Notice
Disclosure Notice
Distribution Statement
Export Control Notice Warning
Destruction Notice
Copyright Information
Distribution Restriction

This publication not available through the AG publications centers. This publication is available through (*insert the name and address of the proponent activity*).

DMWR DATE

SERVICE NOMENCLATURE

OK

FIGURE 41. Example of identification information for DMWR with National Overhaul standards.

IDENTIFICATION INFORMATION

SECURITY CLASSIFICATION

NMWR NUMBER

NATIONAL MAINTENANCE WORK REQUIREMENT
Containing National Overhaul Standards for
NMWR Title
Subtitle
NSN
EIC

Illustration

Availability Statement
Supersedure Notice
Disclosure Notice
Distribution Statement
Export Control Notice Warning
Destruction Notice
Copyright Information
Distribution Restriction

This publication not available through the AG publications centers. This publication is available through (*insert the name and address of the proponent activity*).

NMWR DATE

SERVICE NOMENCLATURE

OK

FIGURE 42. Example of identification information for a NMWR.

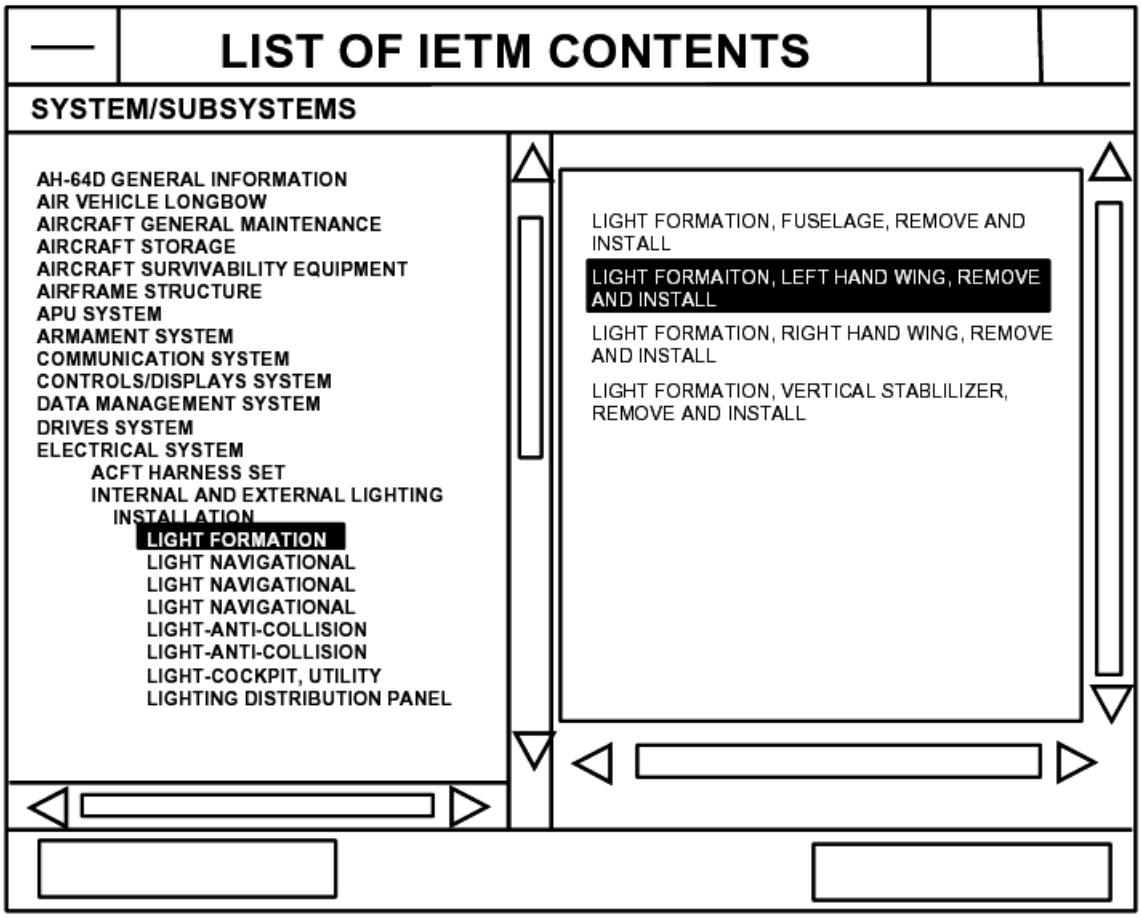

NOTE: See Figure 38 for assembly guidance

FIGURE 43. <u>Example of an IETM contents frame.</u>

TRANSPORTATION ELECTRONICS SHOP CONTROLS - THEORY OF OPERATION

THEORY OF OPERATION 0004 00

SYSTEM OPERATION

POWER ENTRY HOUSING AND SECONDARY INPUT POWER FILTER

Three phase input power from an external source, i.e., diesel powered generator or facility power entry housing and connected to the power input connector. Inside the housing, each neutral line are wired to four independent surge arrestors and the primary input power file protect the circuits within the shelter from transients caused by lighting, induction, switching Magnetic Pulse (EMP). When a surge voltage exceeds the sparkover voltage of the area a short circuit and remains so until the transient has been by-passed and the line automatically The primary input power filter suppresses condition of nose caused by EMP out of the shelter over the input power lines. A secondary input power filter is connected to the input power filter to ensure protection of shelter circuits from transient voltages below the EMP protectors coming in through the power lines.

POWER DISTRIBUTION ASSEMBLY (PDA)

The PDA consists of a base assembly which houses the circuit protection and the power contains circuit breakers and indicators. The circuit protection device consists of an overall phase sequence relay and an over current relay. If a condition exists in a circuit that does not trigger any one of these devices, that fault will cause the MAIN POWER circuit breaker to reset thereby removing power to the internal circuits of the shelter and causes the AC POWER to go off. When set to ON, the MAIN POWER circuit breaker applies power to the inputs of the others and power indicators showing power applied for each phase will come on. As each of the relays set to on, the corresponding indicators will come on providing a visual indication of power.

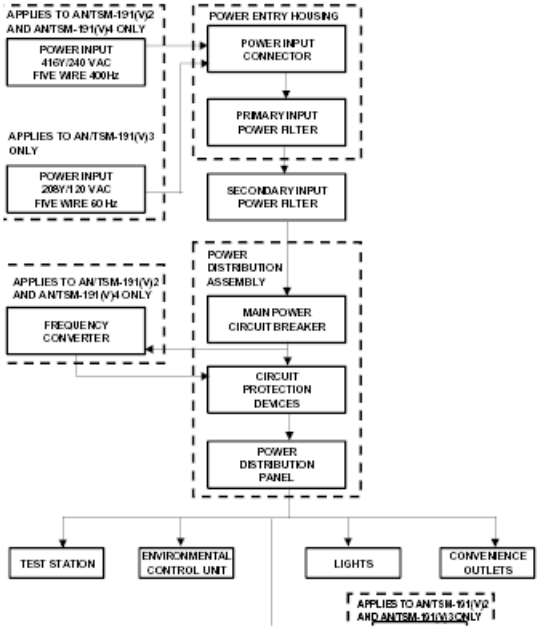

FIGURE 44. <u>Example of descriptive information.</u>

AUXILIARY FUEL TANK PRESSURE CONTROL VALVE - TROUBLSHOOTING

CONTROL VALVE DOES NOT OPEN WITH EXT 1K SWITCH SET TO ON 0145 00

Tools and Special Tools

Tool Kit, Electrical Repairer's SC518099CLA06
Multimeter, Digital, AN/PSM-45

Personnel Required

68F Aircraft Electrician
One person to assist

References

TM 1-1520-238-T-6
TM 55-1520-238-23

Equipment Condition

Access provisions -
L200 cover removed, T250L, T250R, T290L, T290R, and L325 doors open (TM 55-1520-238-23)

FIGURE 45. Example of a troubleshooting procedure.

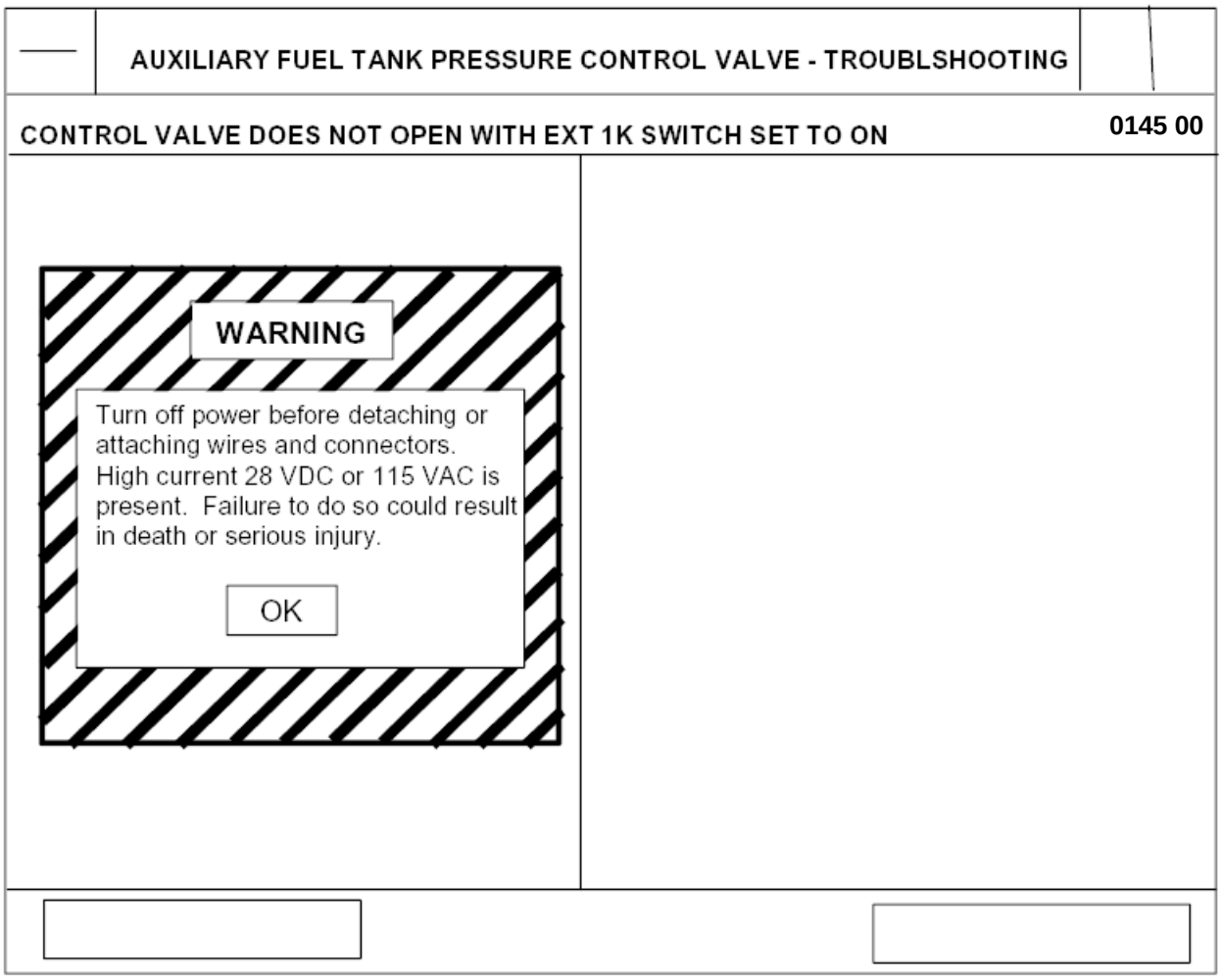

FIGURE 45. <u>Example of a troubleshooting procedure</u> - Continued.

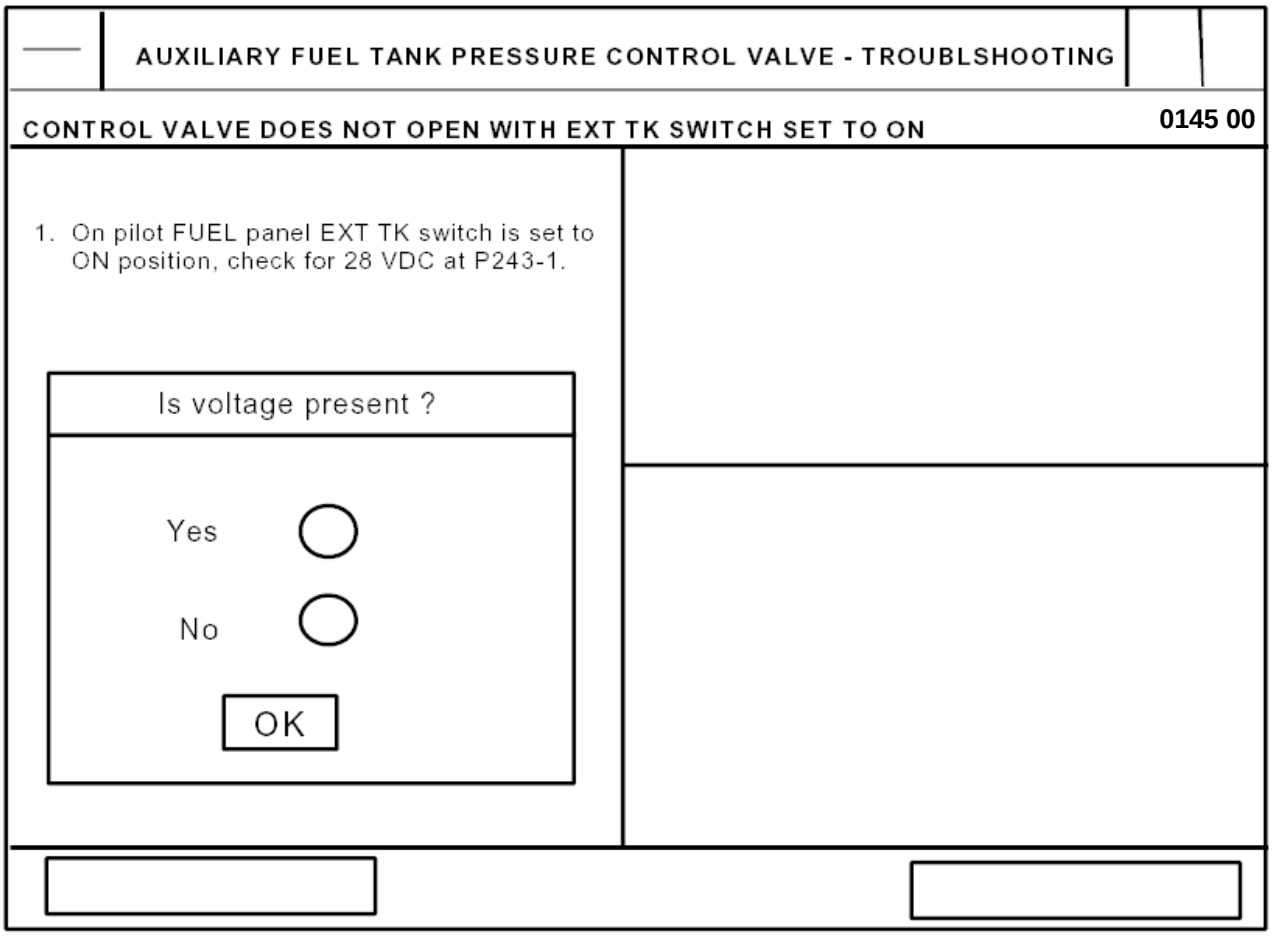

FIGURE 45. <u>Example of a troubleshooting procedure</u> - Continued.

AUXILIARY FUEL TANK PRESSURE CONTROL VALVE - TROUBLESHOOTING

CONTROL VALVE DOES NOT OPEN WITH EXT TK SWITCH SET TO ON 0145 00

2. Check for open between P243-3 and GS576-A.

Does open exist?

Yes (X)

No ( )

OK

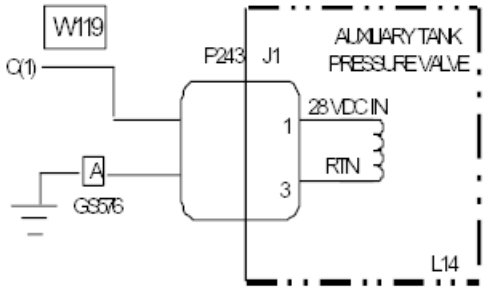

YES RESPONSE BRANCHING

AUXILIARY FUEL TANK PRESSURE CONTROL VALVE - TROUBLESHOOTING

CONTROL VALVE DOES NOT OPEN WITH EXT TK SWITCH SET TO ON 0145 00

3. Repair open wire.

FIGURE 45. Example of a troubleshooting procedure - Continued.

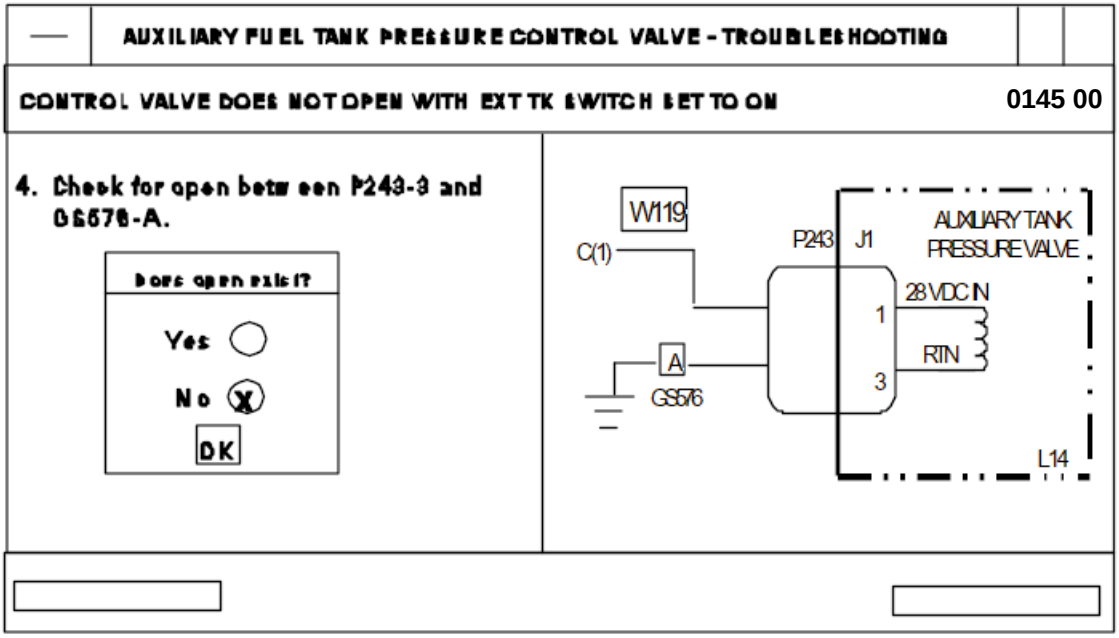

NO RESPONSE BRANCHING

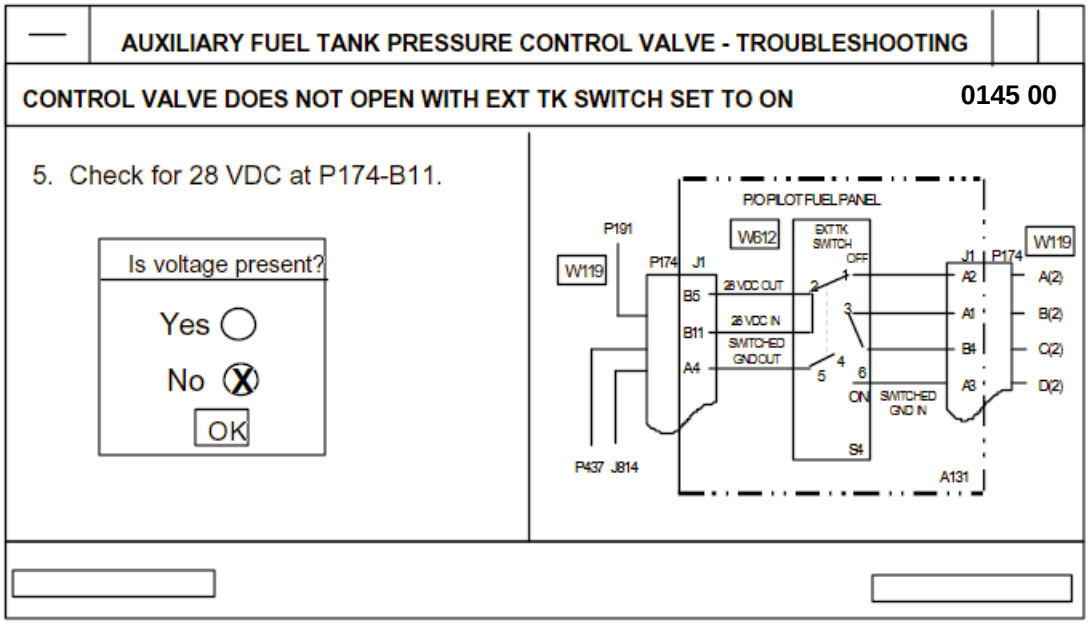

FIGURE 45. Example of a troubleshooting procedure - Continued.

AUXILIARY FUEL TANK PRESSURE CONTROL VALVE - TROUBLESHOOTING

CONTROL VALVE DOES NOT OPEN WITH EXT TK SWITCH SET TO ON 0145 00

6. Check for 28 VDC at P2-D.

Is voltage present?

Yes ○

No ⊗

OK

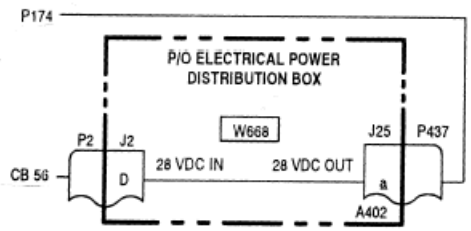

NO RESPONSE BRANCHING (CONT)

AUXILIARY FUEL TANK PRESSURE CONTROL VALVE - TROUBLESHOOTING

CONTROL VALVE DOES NOT OPEN WITH EXT TK SWITCH SET TO ON 0145 00

7. Troubleshoot circuit protection system (dc essential bus 2-pilot station).

FIGURE 45. Example of a troubleshooting procedure - Continued.

REMOVE GUNMOUNT SUPPORT/TRACK (A)ME **0095 00**

REMOVE GUNMOUNT SUPPORT/TRACK (A)ME

Initial Setup

Tools and Special Tools

General mechanic's tool kit, automotive
Torque wrench, 1/2 inch drive, 0.175 ft-lb

Personnel Required

Unit Mechanic 63T10

References

TM 9-2350-291-10

Equipment Condition

Engine stopped

FIGURE 46. Example of a maintenance procedure.

—	REMOVE GUN MOUNT SUPPORT/TRACK (AME)	0095 00

1. REMOVE SKATE MOUNT RACK (4) FROM GUN MOUNT SUPPORT (5).

a. Remove screw (2) and remaining stop (1) from gun mount support (5) and track (4).

b. Remove six screws (3) and track (4) from gun mount support (5).

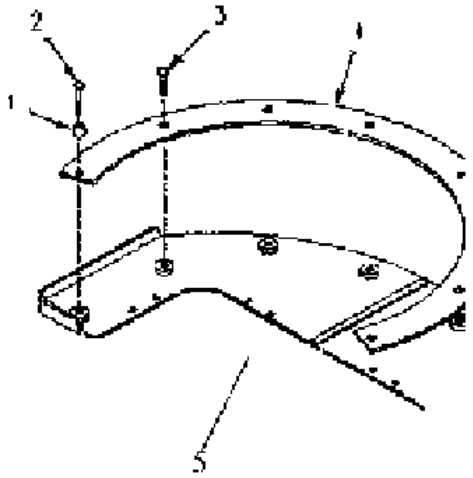

FIGURE 46. Example of a maintenance procedure - Continued.

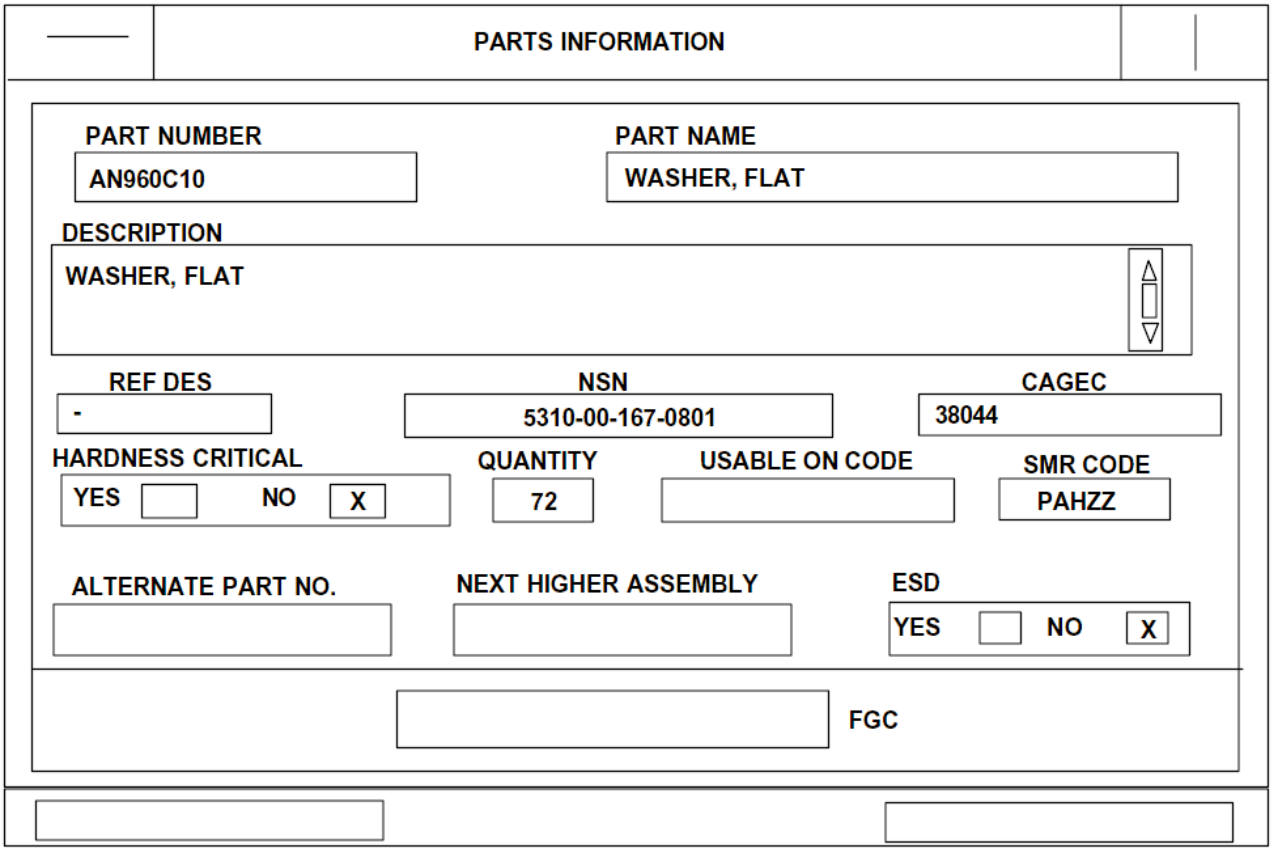

FIGURE 47. <u>Example of parts information.</u>

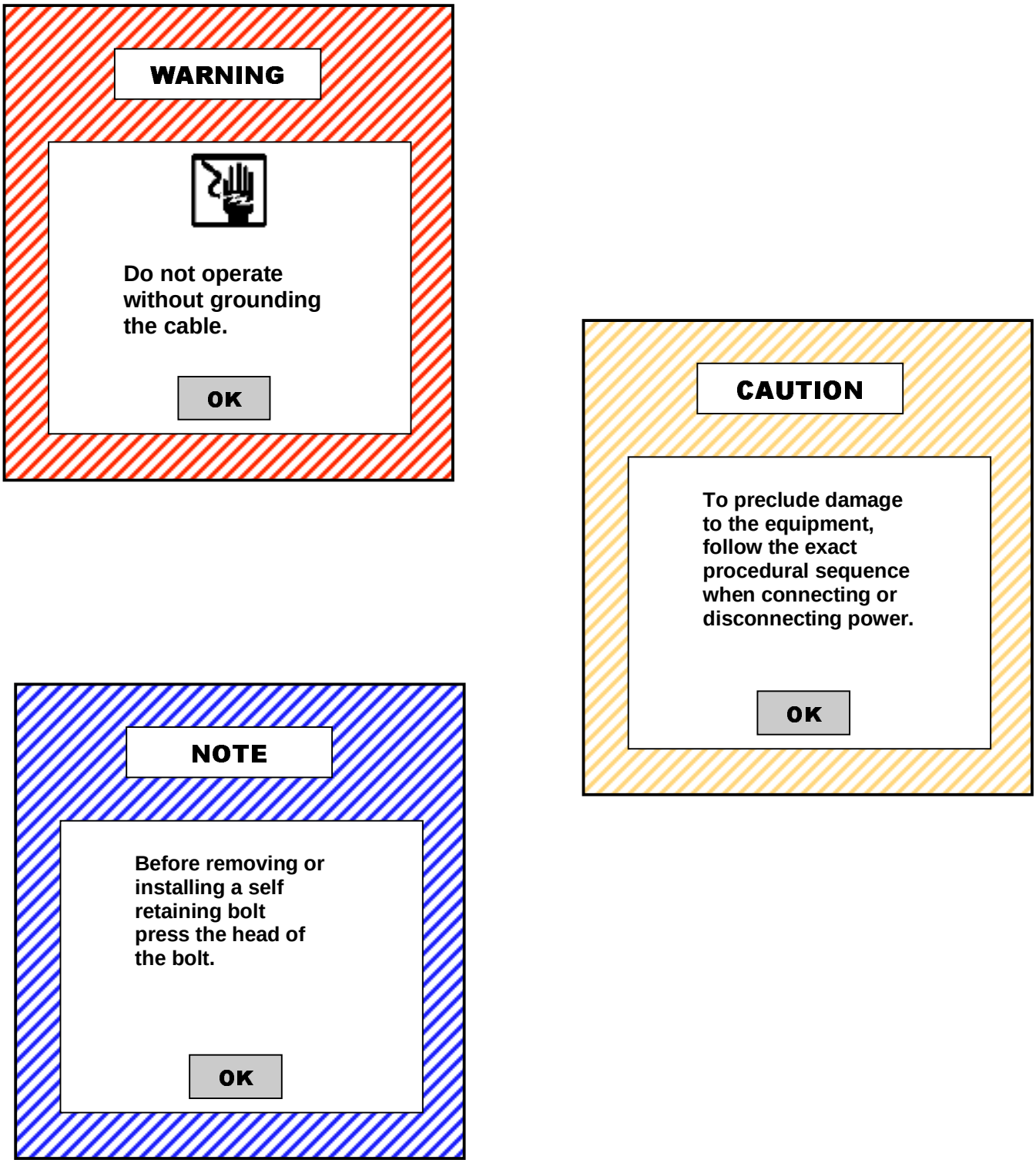

FIGURE 48. Example of alerts.

	LIGHT, FORMATION, LEFT HAND WING, REMOVE AND INSTALL	0355 00

LIGHT, FORMATION, LEFT HAND WING, REMOVE AND INSTALL

INITIAL SETUP

Tools and Special Tools

TOOL KIT, AIRCRAFT M (Qty: 1)
NSN: 5180009879816
Partnum: SC518095CLB09
Cage: 19204

GLOVES, CHEMICAL PRO (Qty: 1)
NSN: 84150026677
Partnum: ZZ-G-381
Cage: 81348

RESPIRATOR, AIR FILT (Qty:1)
NSN: 4240008836519
Partnum: 85556
Cage: 55799

GOGGLES, INDUSTRIAL (Qty:1)

Personnel:
66X AH-64 Armament/Electrical Systems Repairer
Number Required: 1

68X3F AH-64 Armament/Electrical Systems Technical Inspector
Number Required: 1

FIGURE 49. Example of a work package initial setup.

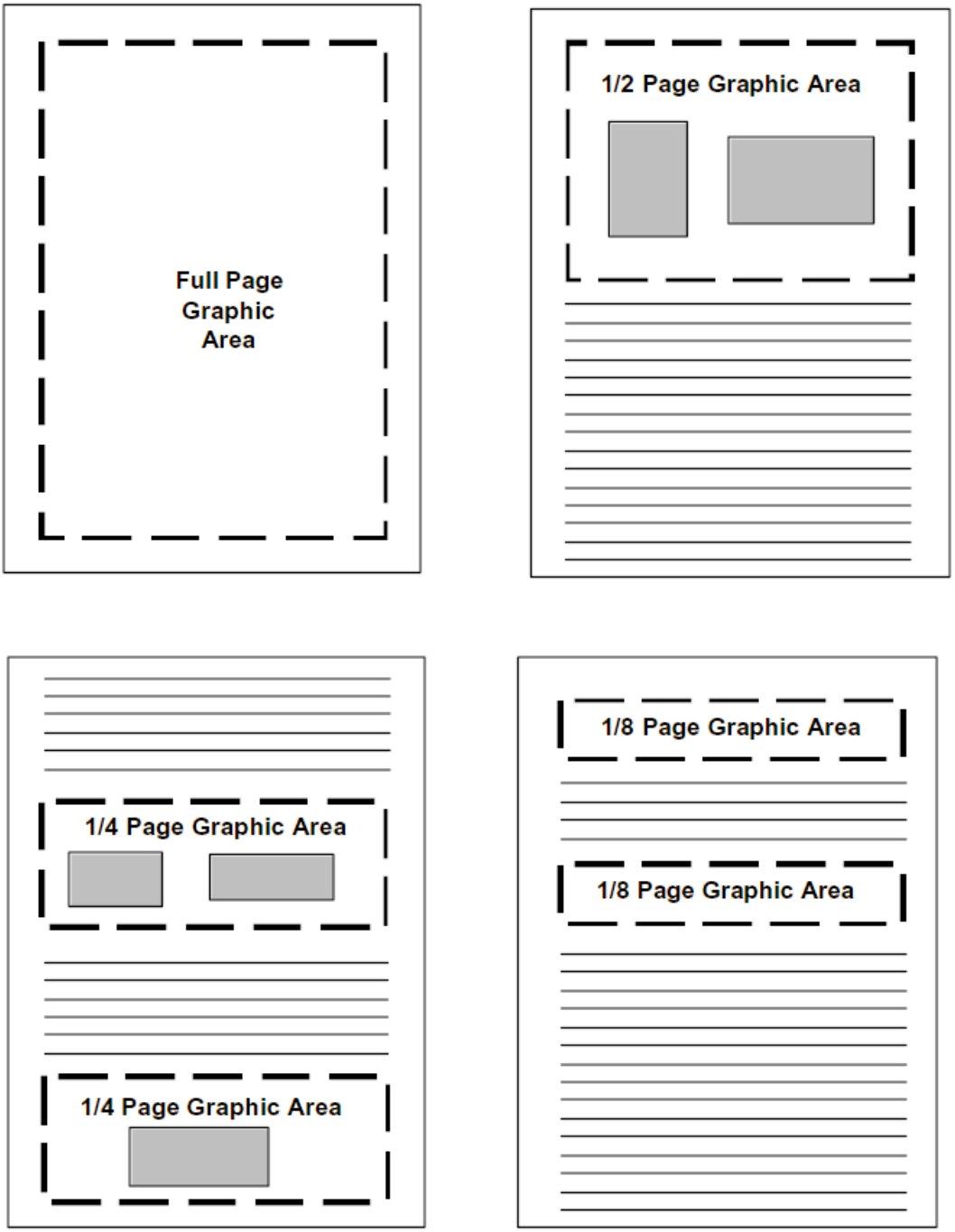

FIGURE 50. <u>Example of size options allowed for graphics.</u>

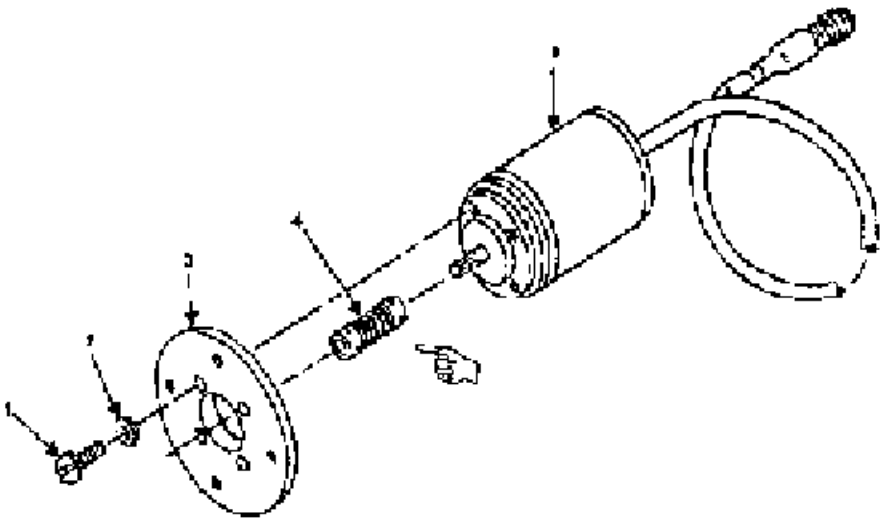

MINIATURE POINTED HAND

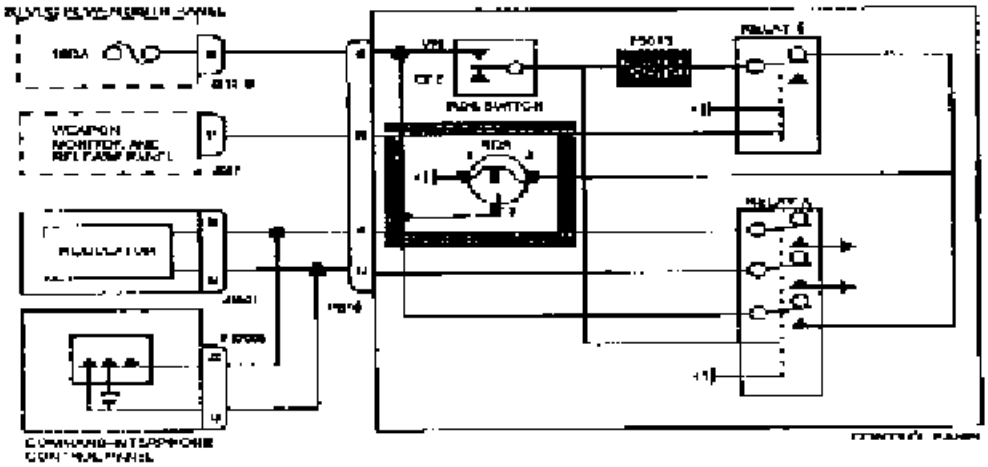

SCREENED AREA

FIGURE 51. <u>Example of change/revision symbols on illustrations.</u>

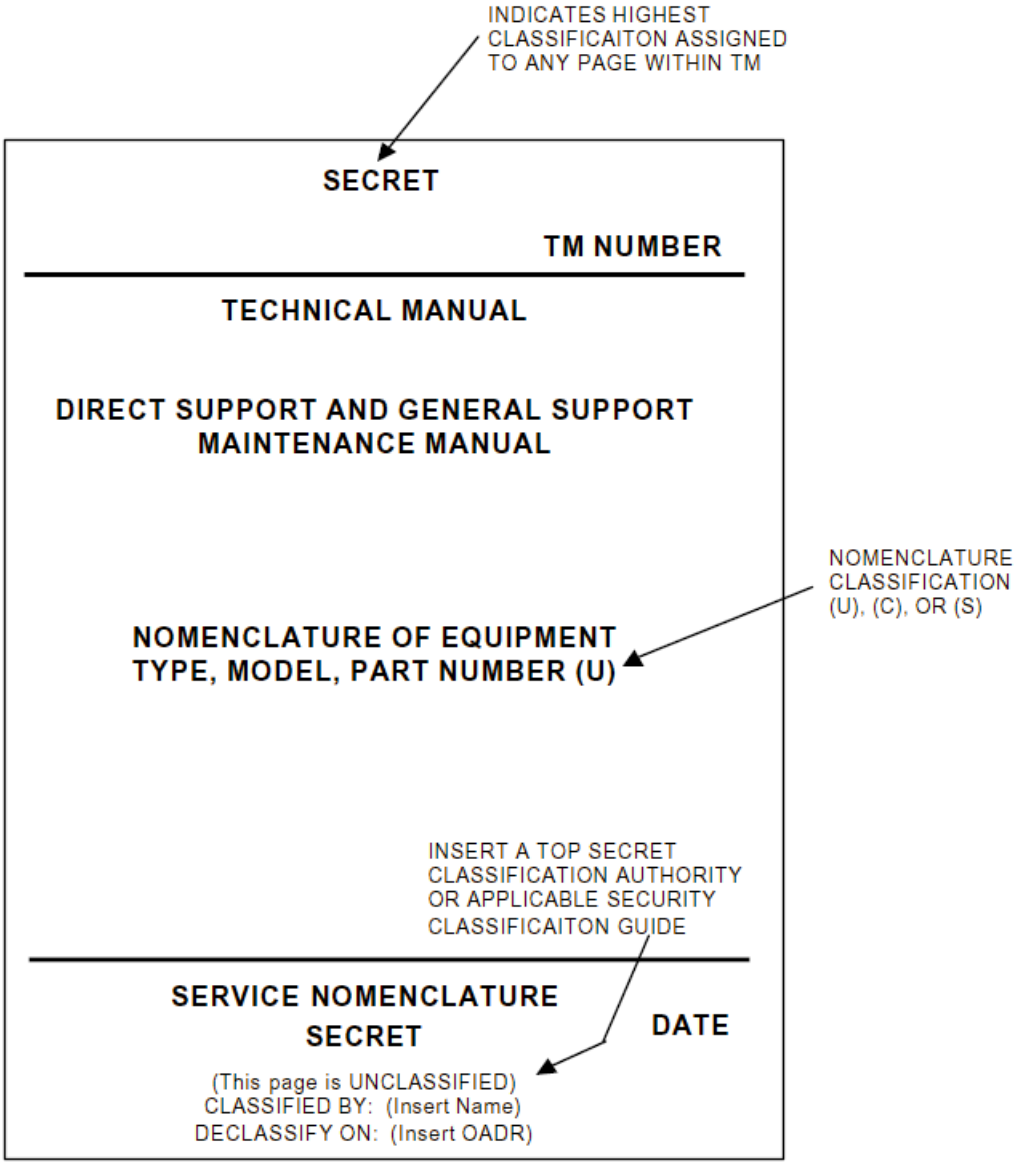

FIGURE 52. <u>Example of security classification markings for cover.</u>

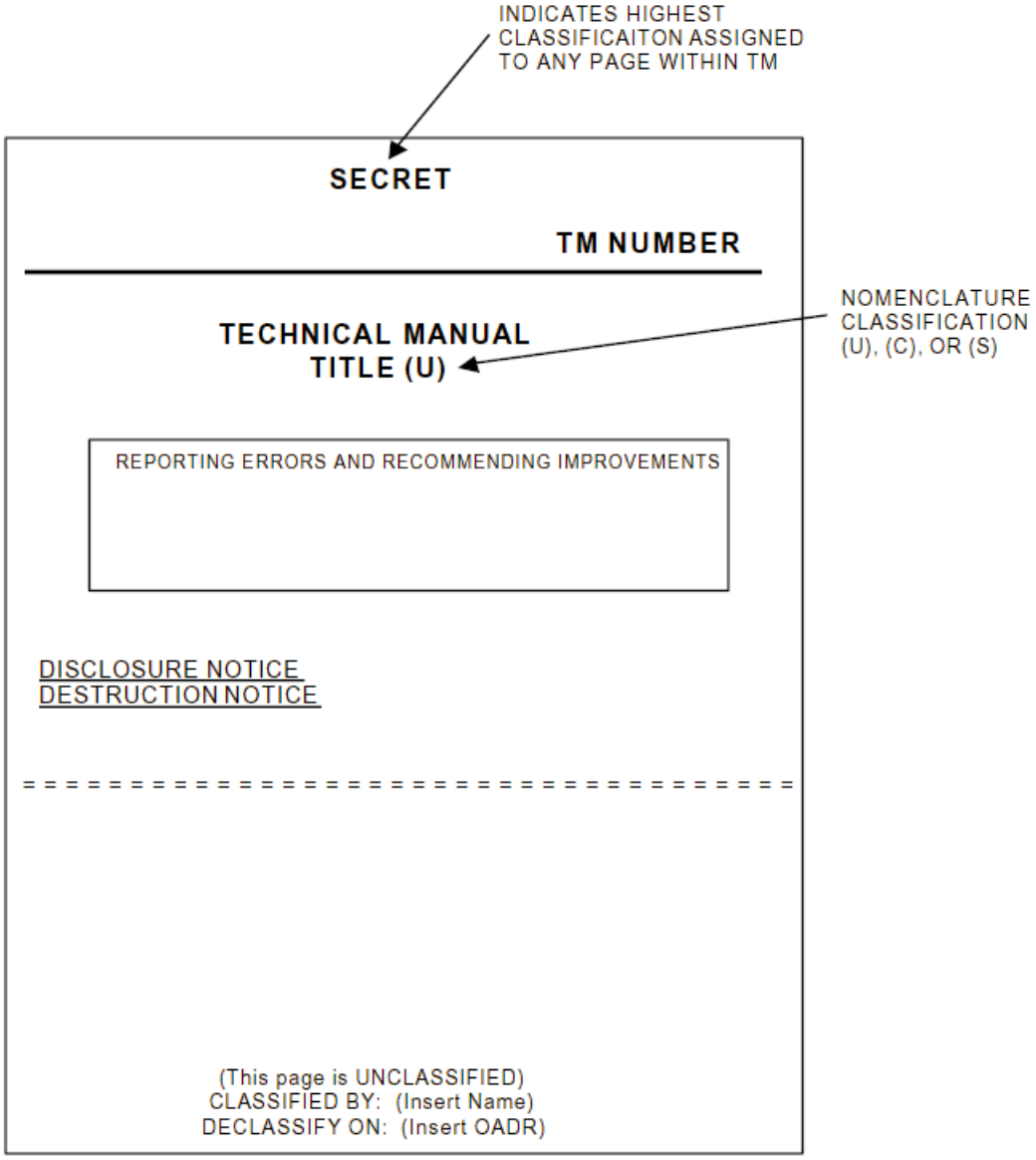

FIGURE 53. Example of security classification markings for title block page.

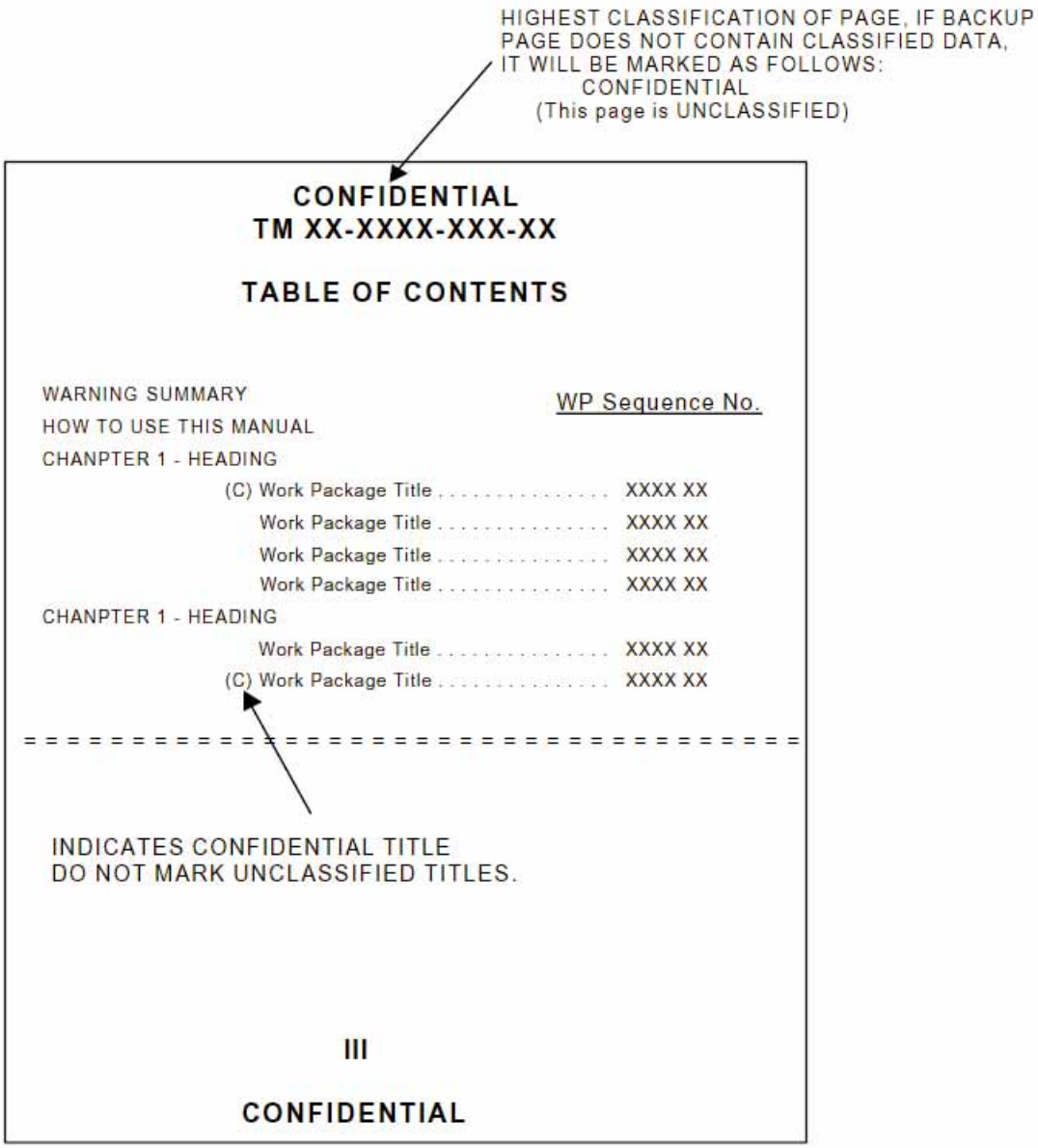

FIGURE 54. Example of security classification markings for table of contents.

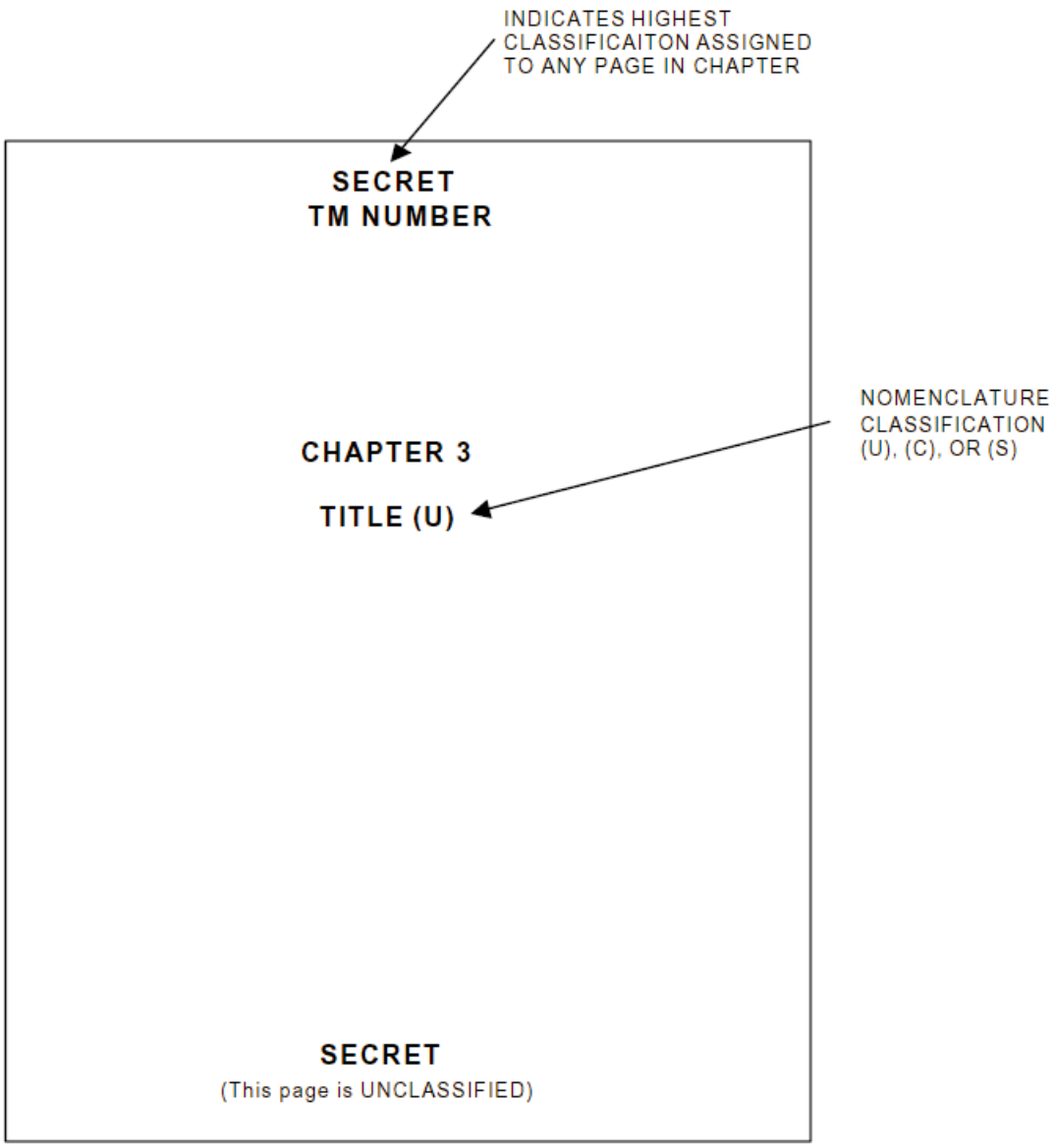

FIGURE 55. <u>Example of security classification markings for chapter title page.</u>

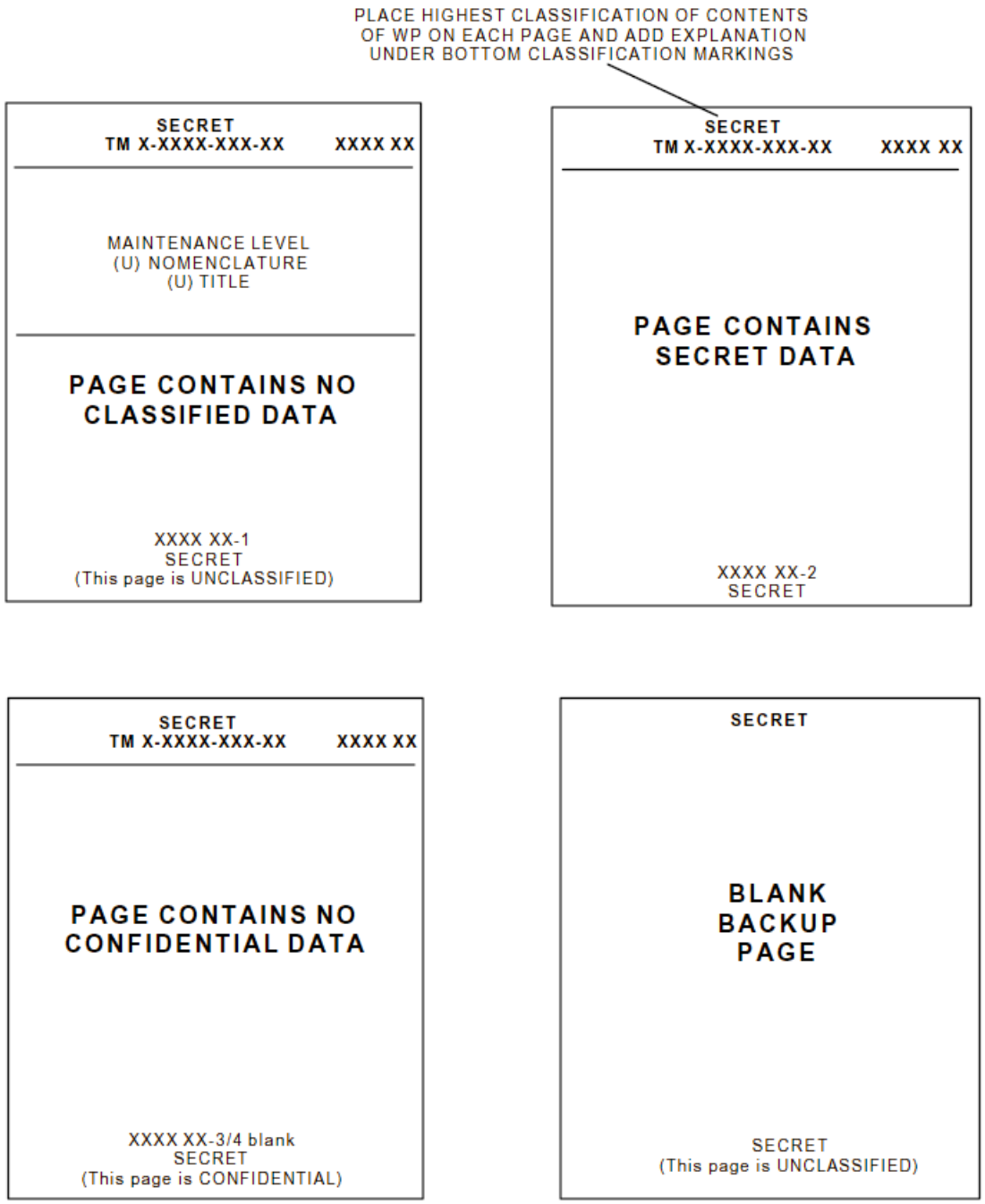

FIGURE 56. <u>Example of security classification markings for work package.</u>

UNCLASSIFIED

TM 3-6665-339-10

TABLE OF CONTENTS

WP Sequence No.

WARNING SUMMARY

HOW TO USE THIS MANUAL

CHAPTER 1 - GENERAL INFORMATION, EQUIPMENT DATA, AND THEORY OF OPERATION
General Information 0001 00
Equipment Description and Data.....0002 00
Introduction.....0003 00
Powerpack Theory of Operation.....0004 00
Fuel System Theory of Operation.....0005 00
Electrical System Theory of Operation 0006 00
Hydraulic System Theory of Operation.....0007 00
Amphibious System Theory of Operation 0008 00
Bilge Pumps and Drain Valves Theory of Operation 0009 00
Fire Extinguisher System Theory of Operation.....0010 00

==========

CHAPTER 2 - OPERATOR INSTRUCTIONS
Description and Use of Controls and Indicators 0019 00
Operate Intercom 0020 00
Operate NBC Collective Protection System (Operate Micro climatic System
And M42 Mask).....0021 00
Operate Domelight.....0022 00
Operate Portable Fire Extinguisher.....0023 00
Enter Driver's Station 0024 00
Adjust Seat, Safety Belt, and Mirrors.....0025 00
Power Up Hull Systems 0026 00
Install Periscopes.....0027 00
Operate Ballistic Shield 0028 00

==========

I
UNCLASSIFIED

FIGURE 57. <u>Example of security classification markings for pages.</u>

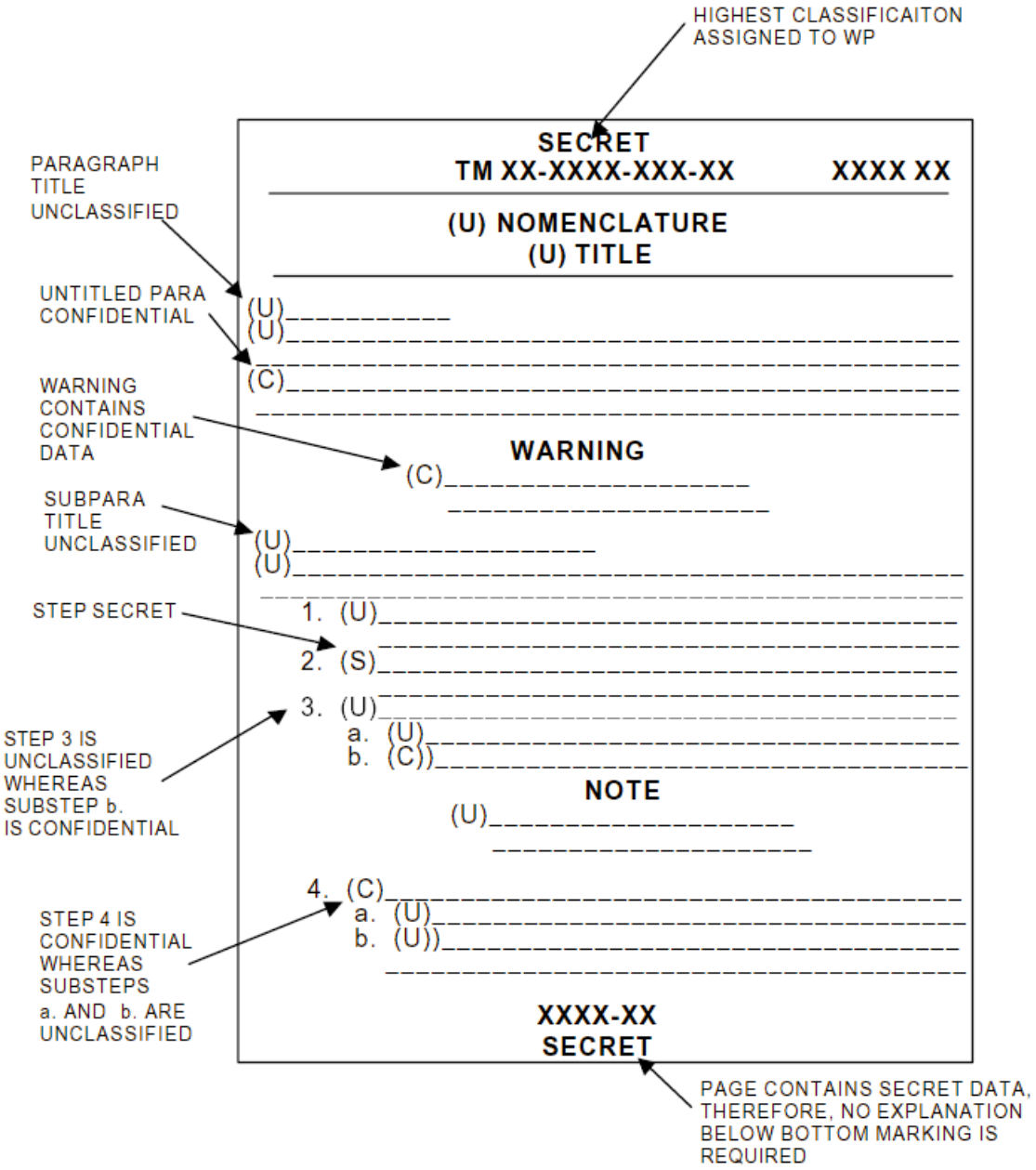

FIGURE 58. <u>Example of security classification markings for paragraphs.</u>

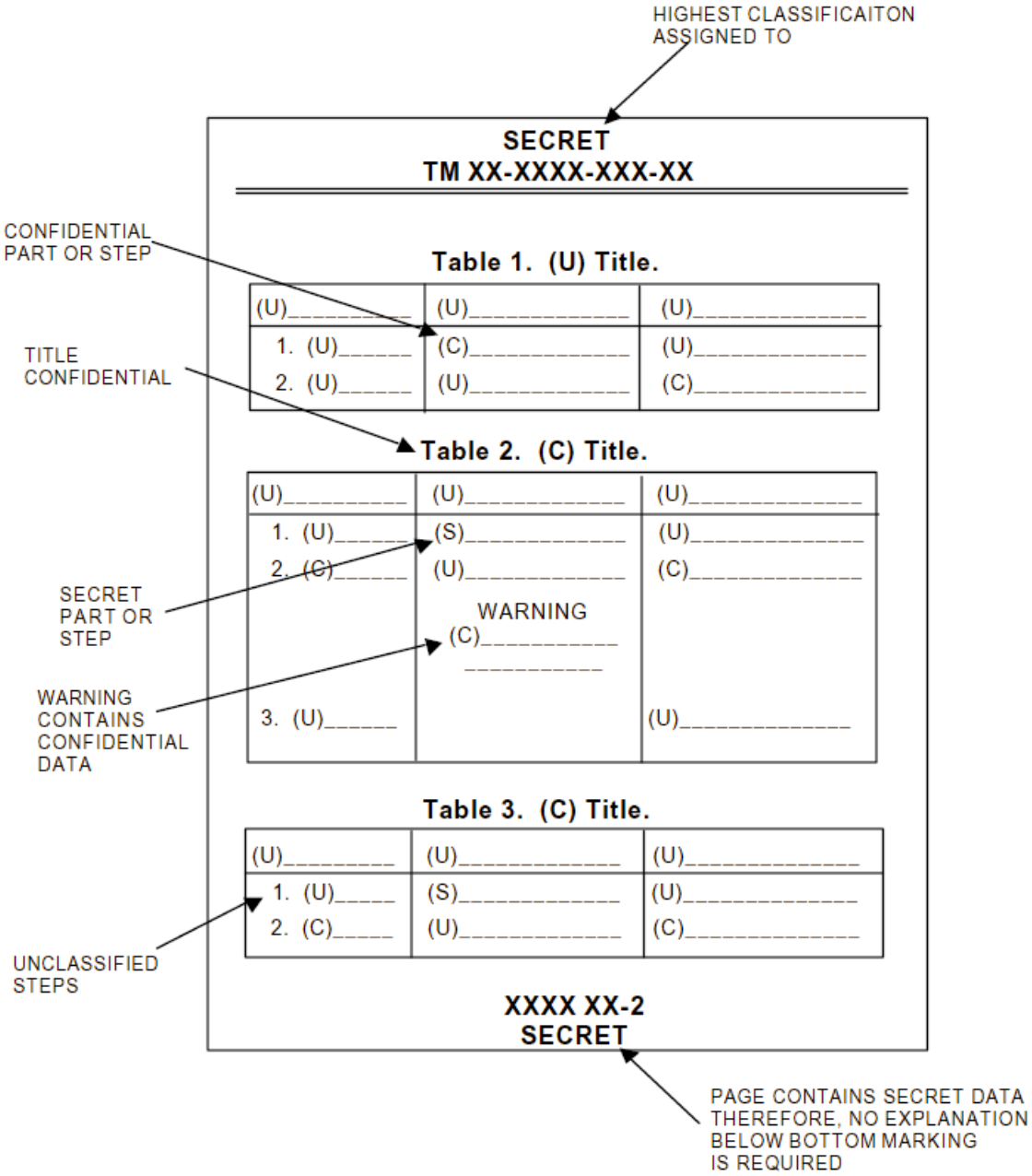

FIGURE 59. <u>Example of security classification markings for tables.</u>

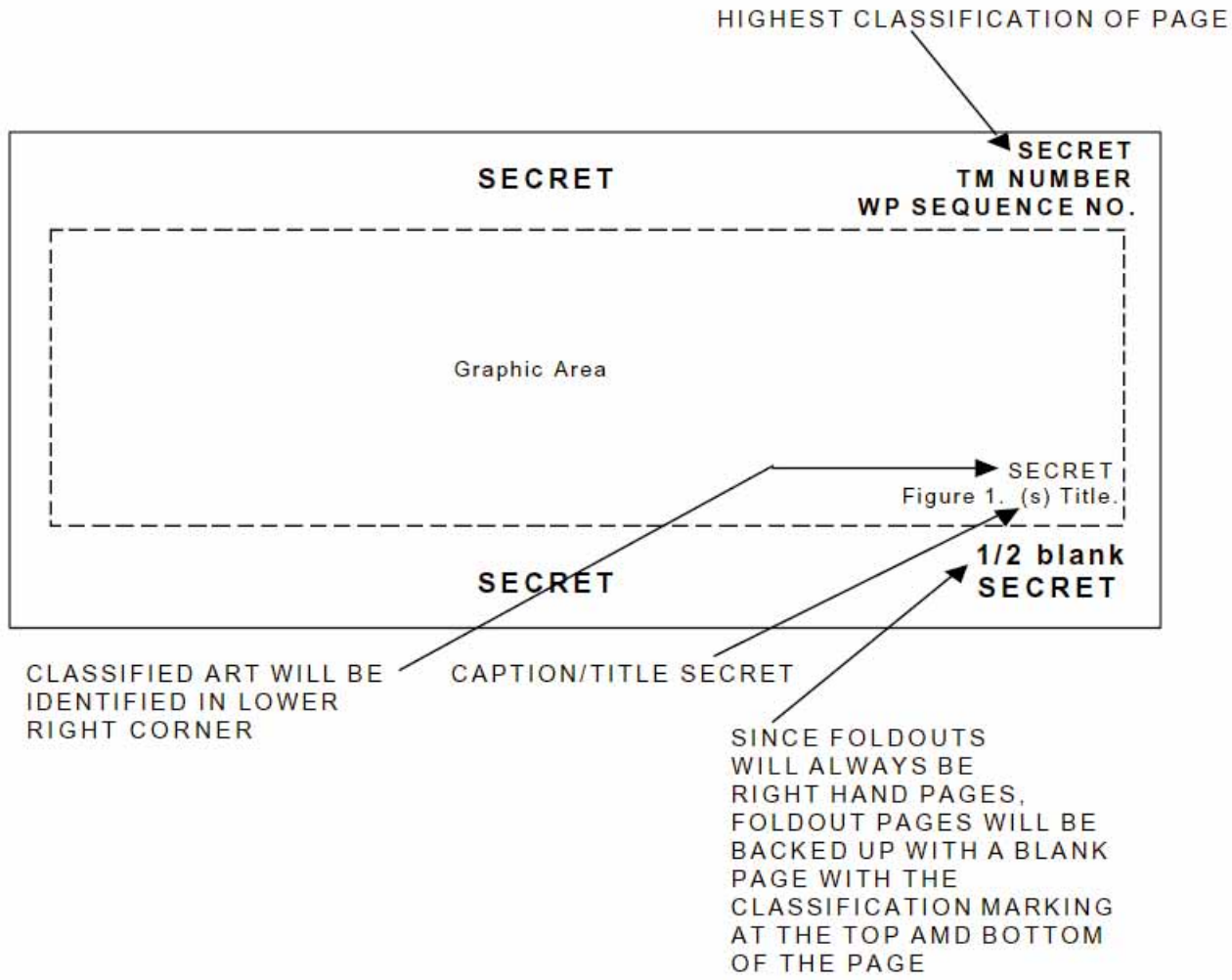

FIGURE 60. <u>Example of security classification markings for illustrations.</u>

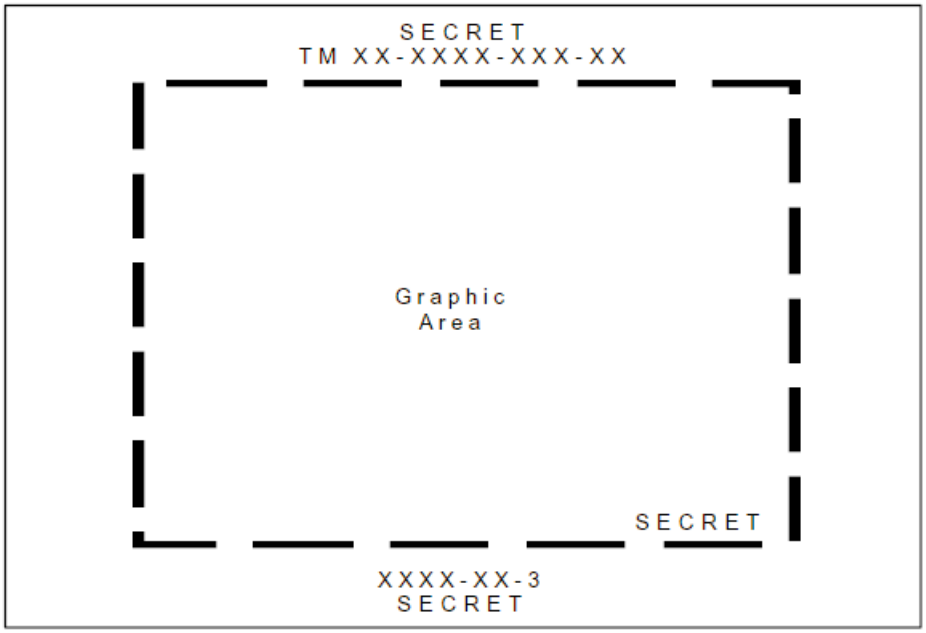

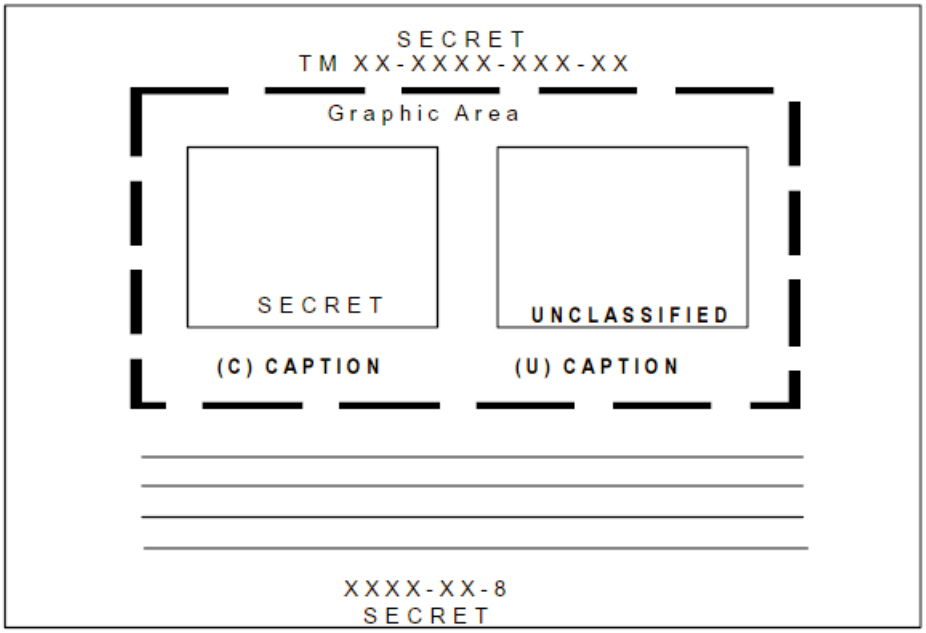

FIGURE 60. <u>Example of security classification markings for illustrations</u> - Continued.

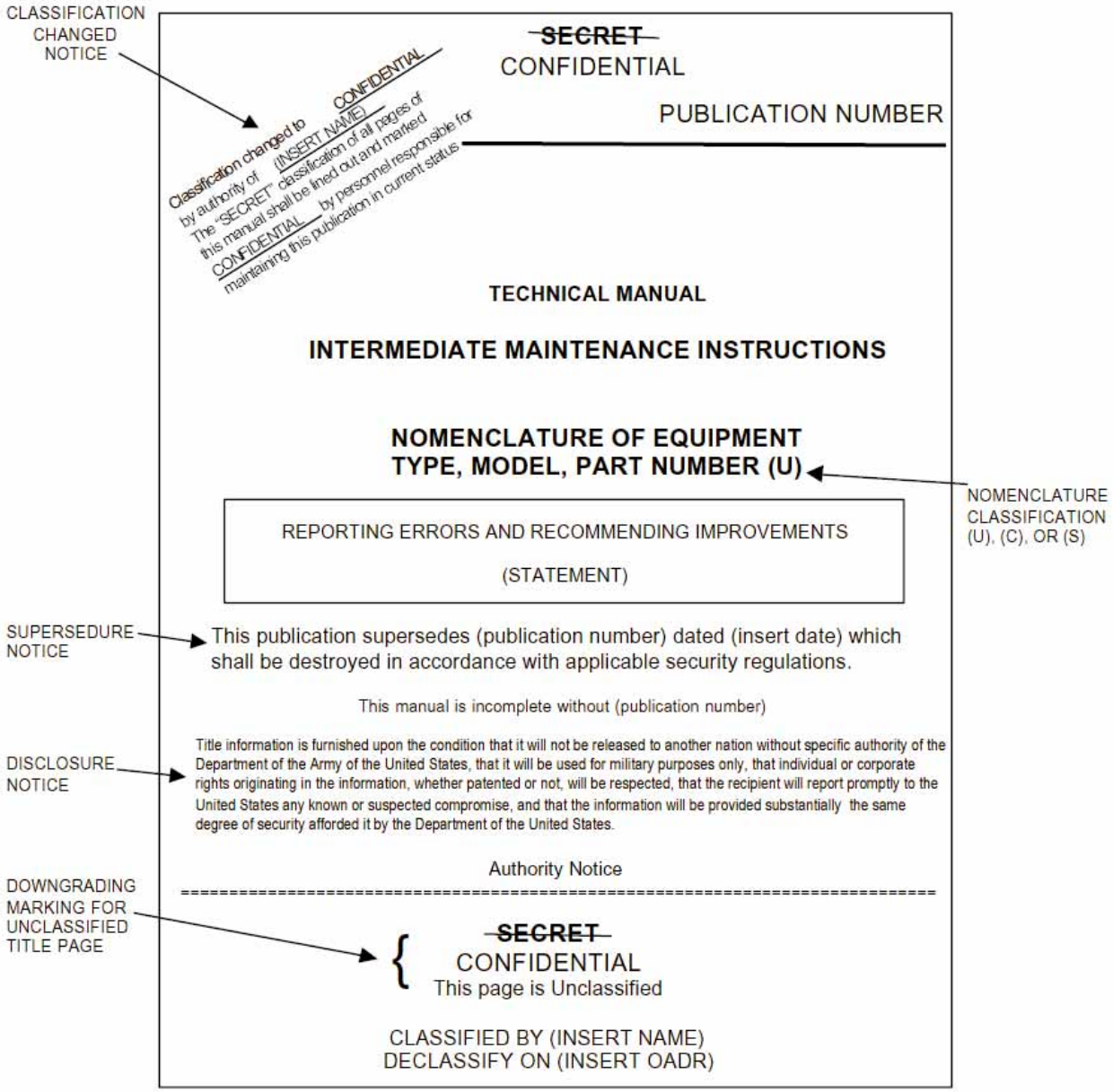

FIGURE 61. <u>Example of downgrading notice on title block page.</u>

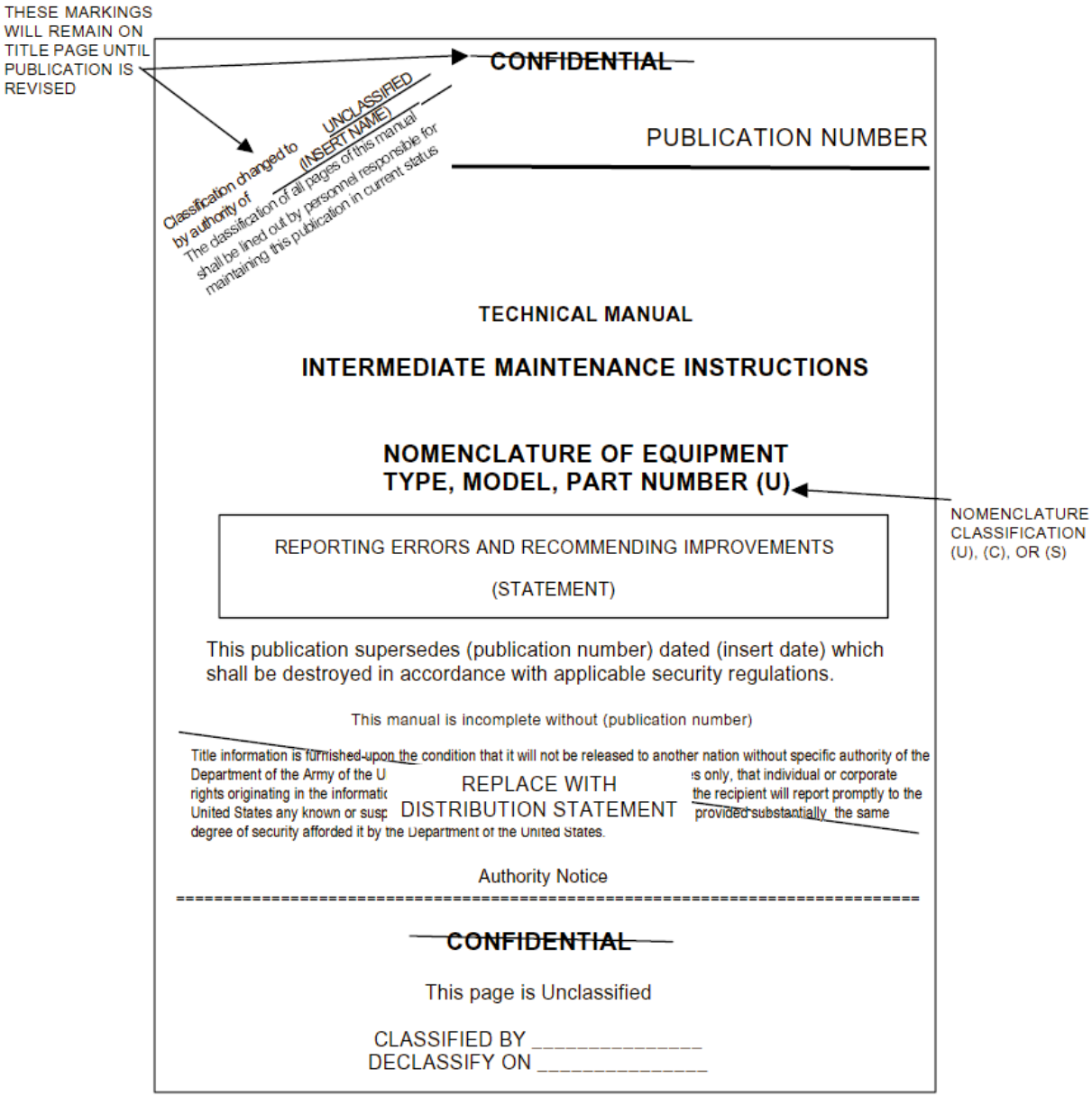

FIGURE 62. <u>Example of declassification notice on title block page.</u>

APPENDIX A

GUIDELINES FOR THE PREPARATION OF INTERACTIVE ELECTRONIC TECHNICAL MANUALS INFORMATION FOR CD-ROM FACE, FLYLEAF, JEWEL CASE, AND MAILER

A.1 **SCOPE.**

A.1.1 Scope. This document includes guidance for the preparation of information for the CD-ROM face, flyleaf, jewel case, and mailer for Interactive Electronic Technical Manuals (IETMs). Information for ETMs (below the level of Class III IETMs) is utilized primarily by the U.S. Army Materiel Command (USAMC), Logistics Support Activity (LOGSA), subsequent to manual preparers' forwarding a copy of manuals in Portable Document Format (PDF) to LOGSA.

A.1.2 Philosophy. This handbook contains general information and examples. This appendix should be used in conjunction with the handbook.

A.2 **APPLICABLE DOCUMENTS.**

This section is not applicable to this appendix.

A.3 **DEFINITIONS.**

The definitions in section 3 of this handbook apply to this appendix.

A.4 **GENERAL REQUIREMENTS.**

This section is not applicable to this appendix.

A.5 **DETAILED REQUIREMENTS.**

A.5.1 CD label data. The CD-ROM should have a label that includes at least the following information (Refer to Figures A-1 and A-2):

a. Branch(es) of Service.

b. Other protective markings. (See para. A.5.1.6)

c. Publication Nomenclature (e.g., TM 1-1520-453-13&P). (See para. A.5.1.1.)

d. CD set number, as applicable (e.g., 1 of 4). (Refer to para. A.5.1.2.)

e. Equipment Media (EM) number. (Refer to para. A.5.1.3.)

f. Distribution Restriction Statement. (Refer to para. A.5.1.5.)

g. Supersession data. (See para. A.5.1.4.)

h. Initial Distribution Number (IDN). (See para. A.5.1.3.)

i. Publication Identification Number (PIN). (See para. A.5.1.3.)

j. Operating System Requirements (e.g., Windows 3.1 or higher).

k. Date of CD-ROM.

l. Current-as-of date.

m. Compression information, if applicable.

n. Copyright information, as applicable as applicable (e.g., FOUO). (See para. A.5.1.6.)

o. Destruction Notice.

p. Arms Export Control Notice, as applicable. (See para. A.5.1.5.)

A.5.1.1 TM number. This should be the TM number assigned to the IETM. This number should be assigned in the same way they are assigned for any other page-based TM. The TM number should never have IETM, ETM, or EM as the publication medium. The TM number should not contain any words such as APACHE or HEMMT.

A.5.1.2 CD set number. If there are two or more CDs utilized as a result of the series and size of related equipment/WS manuals, then number the CDs, as applicable, 1 of 2, 1 of 3, etc. If only one CD is utilized, leave blank (Refer to Figure A-2).

A.5.1.3 EM number, IDN, and PIN. Before generating a pre-master IETM, a request should be made for assignment of the numbered authentication block, EM number, PIN, and IDN from Army Publishing Directorate (APD). This request can be made either by accessing the Case Management System (CASM) database, PAILS database, or by e-mail 30 days prior to submission of a DA Form 260 to APD and release of the official CD to APD for replication.

A.5.1.4 Supersession data. For first-time CDs, the following statement should be printed on the label: "This is the first CD-ROM in this series." (Refer to Figure A-5.) When a CD is superseded, the statement should be printed accordingly; e.g., "This CD supersedes EM XXXX, dated (date)." (Refer to Figure A-2.)

A.5.1.5 Copyright Notice, Distribution Restriction, and Arms Export Control Notice. When one or all of these notices are applicable, the notice(s) should be printed on the CD label. (Refer to Figures A-1 and A-2 for examples of a Distribution Restriction Notice. Refer to Figure A-2 for an Arms Export Control Notice.) The following Distribution Restriction statements should be used for either ETMs or IETMs, as applicable:

a. Distribution Restriction B. Use the following statement verbatim:

"DISTRIBUTION RESTRICTION STATEMENT B. Distribution authorized to U.S. Government agencies only. This determination was made on (*insert CD-ROM date*) based on the highest level of distribution restriction of any Electronic Technical Manual (ETM) on the CD-ROM. Requests for release of ETMs included on this CD should be referred to the proponent as listed on the front cover of the ETM."

b. Distribution Restriction C. Use the following statement verbatim:

"DISTRIBUTION RESTRICTION STATEMENT C. Distribution authorized to U.S. Government agencies and their contractors only. This determination was made on (*inset CD-ROM date*) based on the highest level of distribution restriction of any Electronic Technical Manual (ETM) on the CD-ROM. Requests for release of ETMs included on this CD should be referred to the proponent as listed on the front cover of the ETM."

c. Distribution Restriction D. Use the following statement verbatim:

"DISTRIBUTION RESTRICTION STATEMENT D. Distribution authorized to the DoD and DoD contractors only. This determination was made on (*insert CD-ROM date*) based

on the highest level of distribution restriction of any Electronic Technical Manual (ETM) on the CD-ROM. Requests for release of ETMs included on this CD should be referred to the proponent as listed on the front cover of the ETM."

d. Distribution Restriction E. Use the following statement verbatim:

"DISTRIBUTION RESTRICTION STATEMENT E. Distribution authorized to DoD components only. This determination was made on (*insert CD-ROM date*) based on the highest level of distribution restriction of any Electronic Technical Manual (ETM) on the CD-ROM. Requests for release of ETMs included on this CD should be referred to the proponent as listed on the front cover of the ETM."

e. Distribution Restriction: For Official Use Only (FOUO). Distribution Statement B applies to FOUO. (See Figure A-2 for example.)

A.5.1.6 Protective markings. Protective markings information (e.g., FOUO) should be printed on the CD-ROM label (Refer to Figure A-2).

A.5.1.7 Information not contained on CD-ROM face. The face of the CD-ROM should not contain the following:

a. The command seal or emblem of the Department of Defense, Department of the Army, or local command.

b. More than two colors. Use of multicolor should be approved only when it makes a decisive contribution to the intended purpose of the product. The criteria and standards for using more than two colors on the face of the CD should follow the guidance in paragraph 7-17, AR 25-30, Army Publishing Program.

c. Contractor/company logos or names.

A.5.2 CD Mailer/Flyleaf data.

A.5.2.1 Outside panel of CD mailer (front). The Outside panel of the CD mailer (front) should contain the following:

a. The return address "Department of the Army, U.S. Army Publications Distribution Center, 1655 Woodson Road, St. Louis, MO 63114-6181" in the upper left-hand corner.

b. A bold, single line placed between the address and the capitalized words "OFFICIAL BUSINESS."

c. The word "CONTENT" above the EM number, date of the CD-ROM, the current-as-of date, and IDN.

d. The words "FRAGILE and "HANDLE WITH CARE" printed in the lower left-hand corner. (Refer to Figure A-3 for example.)

A.5.2.2 Outside panel of mailer (back). The PIN number should be printed in the lower right-hand corner. (Refer to Figure A-3 for example.)

A.5.2.3 Outside of mailer (spine). The spine should contain the EM number and the date of the CD-ROM. (Refer to Figure A-3 for example.)

A.5.2.4 Inside of mailer (left panel). The branch of service, IDN, PIN, and name of weapon system/equipment should be printed, immediately followed by the FOUO notice, or other

protective markings (if applicable), Destruction Notice, and Installation Instructions, using boldface type for emphasis, as follows (See Figure A-4 for example):

a. Distribution Restriction. Use one of the statements given in paragraph A.5.1.5.1.

b. Destruction Notice. Use the following statement verbatim:

"DESTRUCTION NOTICE. Send to National Security Agency for destruction. See right side of mailer for instructions."

c. Installation Instructions and Operating Environment. Detailed installation instructions should be printed here according to the specific software being utilized. Instructions for uninstalling the CD should also be included.

A.5.2.5 Inside of mailer (right panel). The following information should be printed verbatim, using boldface and/or capital letters for emphasis as indicated: The authentication of the CD should be printed immediately following the below information. The PIN should be printed in the lower right-hand corner of the mailer panel. (Refer to Figure A-5 for example.)

"**DESTRUCTION INSTRUCTIONS**. National Security Agency (NSA) accepts Distribution Restricted CD-ROMs for destruction and meets environmental standards. If your local facility does not handle CD-ROMs, send expired ones FIRST CLASS to Director, National Security Agency, 9800 Savage Road, ATTN: CMC S714, Suite 6890, Fort George G. Meade, MD 20755-6000.

REQUIRED PROCEDURES: Ship ONLY WHOLE discs. Do not send sleeves, mailers, cases. No need to scratch discs going to NSA. Maximum box size and weight: 18 inches in height, width, or length, and 40 pounds. Send no more than 10 boxes at a time. If shipper wants receipt, include documentation/destruction form and enter total CD-ROMs in box; if others want receipt, also include self-addressed envelope. SINGLE wrap outside box with brown paper. If loose discs rattle, mark box "Rattle OK."

CHANGES AND REVISIONS. To get future changes and revisions to this IETM: Submit a subscription change requirement using Standard Army Publications Systems (STARPUBS) on-line system. For details, see DA Pam 25-33, User's Guide for Army Publications and Forms (Sep 96). Include the Initial Distribution Number (IDN) shown on the face of the CD. Also, include the quantity needed. Units who fail to submit a subscription change requirement will not get future changes and revisions to this IETM. If you submit a subscription for this CD, reduce or delete your requirements for the paper version of the publications contained on this CD, as appropriate."

A.5.3 Flyleafs. If a jewel case is utilized, rather than a printed mailer, the flyleaf should contain the same information as indicated for the mailer.

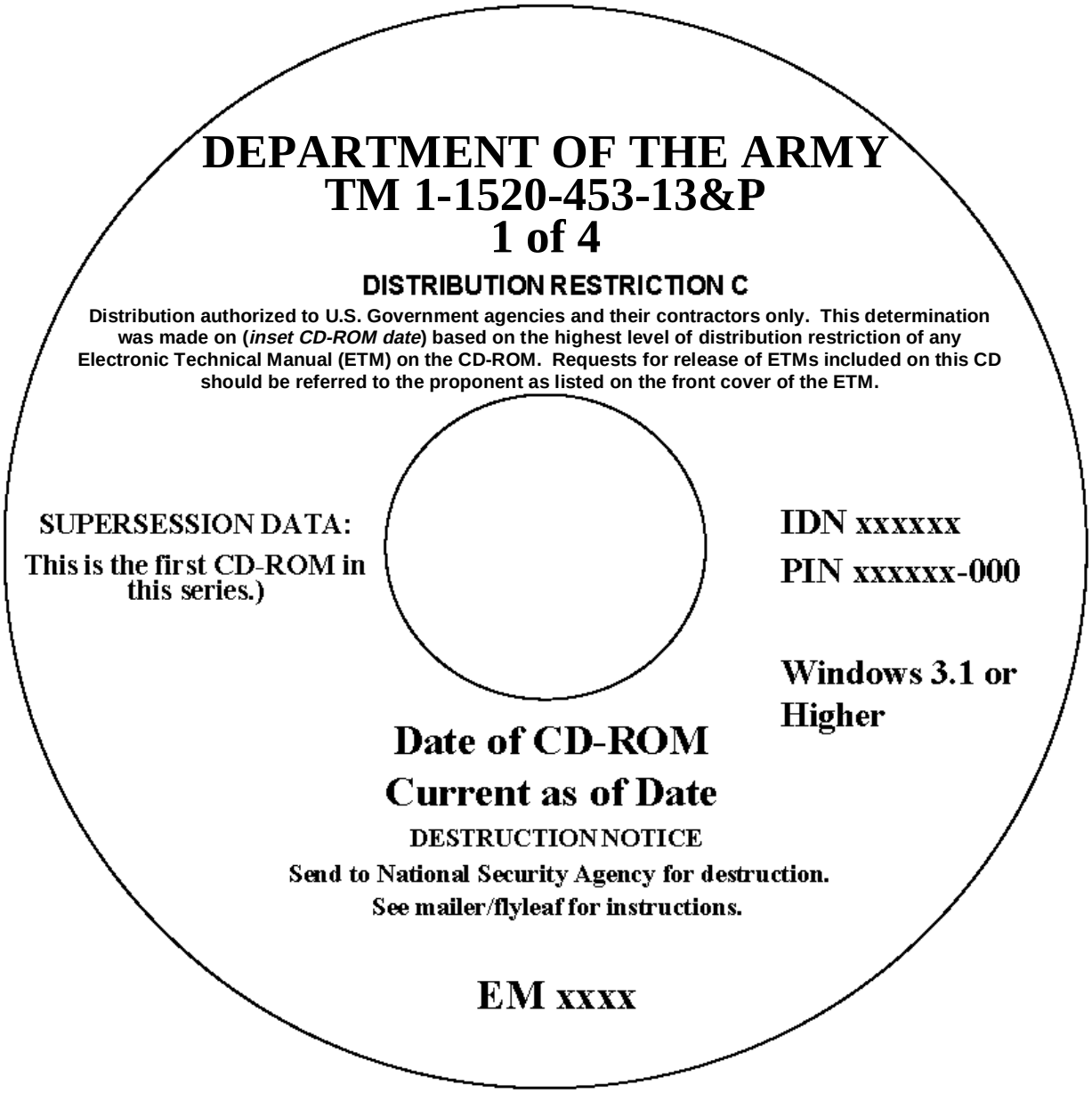

FIGURE A-1. <u>Example 1 of a CD label for first issue of an IETM.</u>

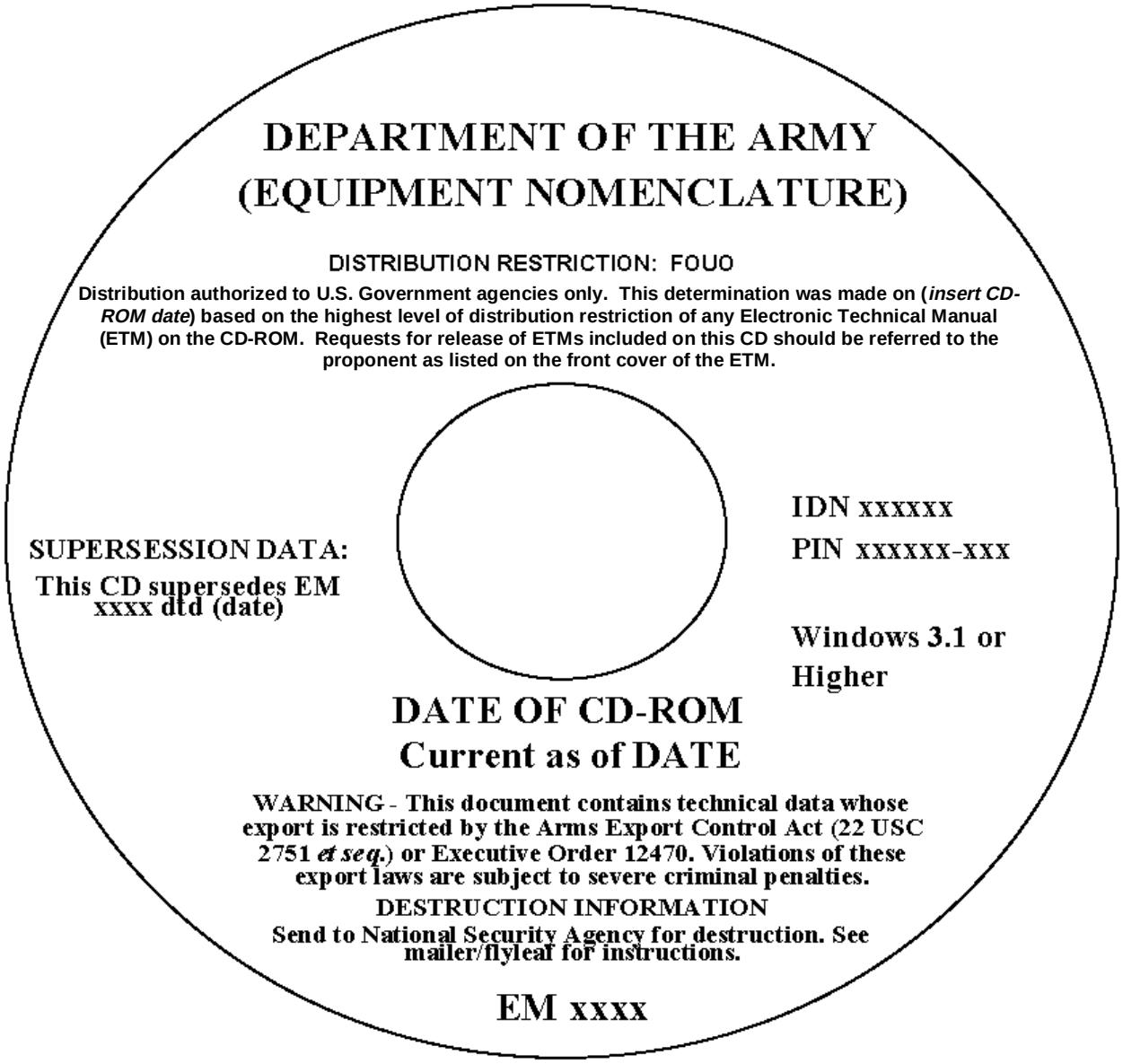

FIGURE A-2. <u>Example of a CD label for superseded IETM.</u>

(FRONT)

DEPARTMENT OF THE ARMY
U.S. ARMY PUBLICATIONS
DISTRIBUITION CENTER
1655 WOODSON ROAD
ST. LOUIS, MO 63114-6181

OFFICIAL BUSINESS

CONTENT
EM NUMBER
DATE
CURRENT AS OF DATE
IDN

FRAGILE
HANDLE WITH CARE

(SPINE)

EM XXXX

(BACK)

PIN XXXXXX-XXX

FIGURE A-3. <u>Example of CD mailer outside front, spine, and back.</u>

DEPARTMENT OF THE ARMY
IDN XXXXX PIN XXXXX-XXX
Equipment Nomenclature

Info printed on flap

DISTRIBUTION RESTRICTION STATEMENT D. Distribution authorized to the DOD and DOD contractors only. This determination was made on 1 June 1998. Other requests shall be referred to USAMC LOGSA, ATTN: AMXLS-AP (CD-ROM), Redstone Arsenal, Al 35898-7466.

DESTRUCTION NOTICE. Send to National Security Agency for destruction. See right side of mailer for instructions.

Info printed below flap

INSTALLATION INSTRUCTIONS AND OPERATING ENVIRONMENT. Place the ETM CD in the CD-ROM drive; **if previously installed:** In Windows 3.1 or Windows for Windows for Workgroups 3.11, Select the ETM Program Group and click on the ETM Program icon; to run from Windows 95, Select programs from start menu, ETM Workgroup, and click on the ETM program. **If not previously installed**: In Windows 3.1 or Windows for Workgroups 3.11, Select File/run from program manager. In Windows 95, Select Start/run form taskbar; Enter (CD-ROM drive letter):\Setup. Example: L:\setup. Click on “OK”. Follow all instructions that appear on the screen. The ETM program will create an ETM Program Group and an ETM Program Group icon. To uninstall: Go to the ETM Program Group and double click the uninstall icon. Follow any instructions given.

FIGURE A-4. Example of CD mailer, inside (left side panel).

DESTRUCTION INSTRUCTIONS. National Security Agency (NSA) accepts Distribution Restricted CD-ROMs for destruction and meets environmental standards. If your local facility does not handle CD-ROMs, send expired ones FIRST CLASS to Director, National Security Agency, 9800 Savage Road, ATTN: CMC S714, Suite 6890, Fort George G. Meade, MD 20755-6000.

REQUIRED PROCEDURES: Ship ONLY WHOLE discs. Do not send sleeves, mailers, cases. No need to scratch discs going to NSA. Maximum box size and weight: 18 inches in height, width, or length, and 40 pounds. Send no more than 10 boxes at a time. If shipper wants receipt, include documentation/destruction form and enter total CD-ROMs in box; if others want receipt, also include self-addressed envelope. SINGLE wrap outside box with brown paper. If loose discs rattle, mark box "Rattle OK."

CHANGES AND REVISIONS. To get future changes and revisions to this IETM: Submit a subscription change requirement using Standard Army Publications Systems (STARPUBS) on-line system. For details, see DA Pam 25-33, User's Guide for Army Publications and Forms (Sep 96). Include the Initial Distribution Number (IDN) shown on the face of the CD. Also include the quantity needed. Units who fail to submit a subscription change requirement will not get future changes and revisions to this IETM. If you submit a subscription for this CD, reduce or delete your requirements for the paper version of the publications contained on this CD, as appropriate."

By Order of the Secretary of the Army:

Official:

JOEL B. HUDSON
Administrative Assistant to the Secretary of the Army

ERIC K. SHINSEKI
General, United States Army
Chief of Staff

PIN: xxxxxx-000

FIGURE A-5. Example of CD mailer, inside (right side panel).

APPENDIX B

EXAMPLES OF TYPES OF GRAPHICS USED IN WORK PACKAGE TECHNICAL MANUALS

B.1 **SCOPE.**

B.1.1 Scope. This appendix provides examples of the various types of graphics used in the development of both page-based and frame-based work package technical manuals. All graphics developed in accordance with this appendix should be delivered in one of the three graphic formats: MIL-PRF-28003, Computer Graphic Metafile (CGM); MIL-PRF-28002, Continuous Acquisition and Life-cycle Support (CALS) Raster; or MIL-PRF-28000, Initial Graphics Exchange Specification (IGES). Other commercial graphic formats are acceptable if approved by the acquiring activity.

a. The CGM file format is the preferred graphics file format.

b. All graphics files for a particular TM should be applied in the same graphics format if practical. Otherwise, files may be delivered in any combination of the allowable formats.

c. Appropriate header and identification information should be included in each graphics file. Refer to the applicable specification for the specific requirements.

B.2 **APPLICABLE DOCUMENTS.**

The applicable document information in section 2 of this handbook applies to this appendix.

B.3 **DEFINITIONS.**

The definitions in section 3 of this handbook apply to this appendix.

B.4 **GENERAL REQUIREMENTS.**

B.4.1 Elements of illustrations.

B.4.1.1 Border rules and boxes. Border rules and boxes should not be used for single illustrations, but are used to separate multisection illustrations on the same page or for locator/detail views. (Refer to paragraphs B.5.8, B.5.12, and B.5.13, and to Figure B-1.) For IETMs, border rules and boxes do not apply.

B.4.1.2 Use of the human figure. When necessary, illustrations may include a human figure or parts of the body. The following stipulations apply.

a. Jewelry should not appear in any illustration.

b. The illustrated human figure should not obscure necessary details of the item(s) being illustrated.

c. The clothing for the human figure should be illustrated according to samples provided by the acquiring activity.

d. A cross-section of races should be used.

e. A cross-section of sexes should be used except when a task is gender specific.

B.4.1.3 Credit lines.

a. The photographer's or illustrator's name should not appear on any illustration.

b. A manufacturer's name, symbol, or trademark should not appear on illustrations for the purpose of identifying the illustration.

B.4.1.4 Callouts. Index numbers, reference designators, nomenclature, leader lines, sweep arrows, legends, and other identifiers are used, when necessary, to identify significant features.

a. Use leader lines or sweep arrows to help the readers orient themselves with respect to the illustration and to provide directional movement in tasks.

b. Callouts are prepared by a mechanical or electronic method, rather than by freehand lettering.

c. Callouts and their leader lines should be easily distinguishable from components and other lines of the illustration.

d. Callout leader lines or arrows are straight lines where possible. Don't allow leader lines to cross each other.

e. When practical, all callouts should be placed outside the boundaries of the parts illustrated so that the parts are not obscured.

f. Use a type size no smaller than 8 points and no larger than 10 points.

g. Use uppercase lettering for nomenclature callouts.

h. Nomenclature may appear on illustrations only if it can be done without crowding or reducing type size so as to make reading difficult. (Use diagram callouts of no smaller than 8 points.)

i. When an item is first illustrated and its location has not yet been specified, a simplified general locator illustration may be used to identify the location of the equipment item within the system. (Refer to Figure B-2.)

B.4.1.4.1 Index numbers. Index numbers start with Arabic numeral 1 and continue consecutively. For page-based TMs, index numbers continue in sequence from one sheet to another in a set of multisheet illustrations. For page-based TMs, when a series of illustrations are used within the same informational, operational or maintenance work package (e.g., theory, operator instruction, or removal procedure), index numbers should continue from one illustration in that series to the next. However, if an item that already has been assigned an index number is used in more then one illustration in that series, it should retain the same index number. To improve clarity within a page-based TM, all three index number sequence methods may be used, however, the sequence method within individual chapters should remain consistent.

a. Index numbers should be in clockwise sequence (beginning at 11 o'clock), disassembly sequence, or in order of mention in the text.

b. Identify all items shown as exploded (Refer to Figure B-3). Items drawn in phantom need not be identified. (Refer to Figure B-3.)

c. Index numbers should not be contained within circles unless required for a specific reason in MIL-STD-40051.

B.4.1.5 RPSTL figures. For RPSTL figures, the sequence of index numbers start at 11 o'clock and proceed clockwise.

B.4.1.6 Nomenclature (Page-based). Nomenclature of more than one line should have the left margin justified when placed on the right side of the illustration, right margin justified when placed on the left side, or stacked with the text centered when on the top or bottom of the illustration. All lines of copy should parallel the horizontal edges of the figure, whenever possible. (Refer to Figure B-4.)

B.4.1.7 Leader lines and arrowheads. Do not allow leader lines to touch the callout. Do not allow arrowheads to enter the object to which they apply. If it is necessary to enter the object to provide for greater clarity, a breakoff symbol should be used in lieu of an arrowhead. (Refer to Figure B-4.)

a. Lines are to be uniform, short, and as straight as possible; avoid the use of dogleg-shaped lines unless absolutely necessary.

b. Leader lines should be placed at an angle.

c. Arrowheads may be added for clarity.

d. Arrowheads should be uniform in shape and size when multiple arrowheads are used on a page.

e. Lines and arrowheads should not cross or come in contact with other callout lines or arrowheads nor should they obscure essential details.

B.4.1.8 Illustration legends. When necessary for clarity, legends are prepared to identify index numbers on illustrations.

Author's Note: Illustration legends should not be used in IETMs.

a. Legends are a part of the illustration and are not be placed in the text area.

b. The header is prepared in the following format: Legend.

c. If the legend is continued, repeat the header, followed by a dash and the word "Continued."

d. The list is placed one line space below the heading. It is single spaced, and indented two spaces.

e. The list consists of the index numbers corresponding to the index numbers on the illustration, followed by a period, two spaces, and the name/description of the item.

f. Only that information which is necessary to clearly identify the items is included in the legend.

g. Where methods such as tabular presentation are used (i.e., in a RPSTL), no legends are required.

B.4.1.9 Color in illustrations.

B.4.1.9.1 Page-based TMs. Black and shades of black (one color) are normally used for TMs. Prior approval for use of color should be obtained from the acquiring activity. The acquiring activity should provide written approval, designating color(s) to be used.

a. When color (other than black) is required, it should be held to the minimum absolutely necessary to highlight or clarify important information.

b. The number of colors should be kept to a minimum by use of various techniques such as tints, patterns, cross-hatching, and dots.

c. Any number of shades of a primary color used can be considered as one color (e.g., a two-color printing could consist of black and three shades of red).

d. When color is approved/specified, the primary colors of red and blue should be used first.

e. Yellow should not be used alone.

B.4.1.9.2 Frame-based TMs. Color may be used when it will enhance the understanding of the data. The use of some colors may not be appropriate for certain environmental conditions. The following color limitations apply:

a. Red should not be used if the IETM will be used in Red Light conditions such as in a tank or shelter.

b. For IETMs that may be displayed on a monochrome system, reverse video and/or underlining should be used for hotspots rather than color.

c. The use and choice of colors should be as specified by the acquiring activity.

B.4.1.10 Identification numbers. Each illustration is assigned a unique identification number provided by the acquiring activity. (Refer to Figure B-3.) For IETMs, the illustration identification number should not be visible when the illustration is displayed on the EDS.

a. Contractor's identification number may be used when approved by the acquiring activity.

b. When the identification number is to be printed in the TM, such numbers should be approximately 4- to 6- point type and placed in the lower right-hand corner of the illustration (within the graphics area) sufficiently removed to avoid being confused as part of the illustration.

B.5 **DETAILED REQUIREMENTS**

B.5.1 Types of graphics. As applicable, the following types of graphics should be used in the preparation of page-based technical manuals and IETMs.

a. Line drawings.

b. Photographs.

c. Engineering drawings.

d. Diagrams.

e. Charts and graphs.

f. Tools and test equipment illustrations.

B.5.2 Illustrations for procedures. Illustrations developed to support operator or maintenance procedures should not contain the text steps on the illustration (in the Figure area).

a. Illustrations for procedures should supplement the text by clarifying procedures that are of a special nature or are not obvious.

b. Locate illustration(s) (except for foldouts) as close to the text step(s) as possible or, for IETMs, hotlink the illustration to the applicable step or steps.

c. It is not necessary to illustrate each step of a maintenance procedure, such as the removal of screws with an ordinary screwdriver, lifting off a cover after the screws have been removed, etc.

B.5.3 Tool and test equipment illustrations. Only uncommon or unusual uses and connections for test purposes are illustrated if it is essential to do so to avoid misunderstanding. Unusual operations should also be illustrated. Standard tools and test equipment are not illustrated, nor should self-evident or generally known uses be shown.

B.5.4 Illustrations of special tools and test equipment. Special tools and test equipment should be illustrated.

B.5.5 Line drawings. Line drawings including exploded views, locator views, and detailed views should be used to support the operational, troubleshooting, and maintenance procedures. Line drawings should be of high reproduction quality.

a. Primary lines that create the basic outline (object line) of the drawing components should have sufficient density (darkness), line weight, and sharpness to accommodate reproduction. When electronically or optically reproduced, the primary lines should require no additional graphic enhancement.

b. Secondary lines, such as those used to indicate extensions or measurements, are lighter than primary lines, but strong enough to reproduce clearly at the required reproduction size.

c. Shading may be used to give substance and form to the item depicted, to sharpen the contrast between the subject and its background, or to increase effectiveness.

(1) Shading and shadows are used only when necessary to provide a clear understanding of form, shape, or depth.

(2) Shading effects are not to be used for decorative purposes.

d. Accented lines may be used to emphasize detail when necessary.

e. For page-based TMs, lined, cross-hatching, or mechanical patterns used instead of color should remain clearly defined on the Final Reproducible Copy (FRC). (Refer to Figure B-5.)

B.5.6 Photographs.

B.5.6.1 Page-based TMs. When approved for use by the acquiring activity, photographs (including prescreened photographs and continuous tone artwork) may be used for illustrations. (Refer to B.5.17.1.2.) Photographs should not be used on foldouts. If the intention is to use photographs in lieu of line art, it is preferred that a digital camera be used to produce the required photos. This negates the use of halftones and the need for retouching and screening.

B.5.6.2 Frame-based TMs. Digital photographs may be used for illustrations when a photograph provides for better clarity than a line drawing. If the intention is to use photographs in lieu of line art, it is preferred that a digital camera be used to produce the required photos.

B.5.7 Engineering drawings. Engineering drawings may be used with the approval of the acquiring activity. Engineering drawings are controlled documents and when used, they should be used in their entirety, without modification. They should be reduced or redrawn to meet page size restrictions. When the controlled elements of an engineering drawing (i.e., title block, sources of

supply, revision data, etc.) are removed, leaving only the "field" of the drawing, it is treated as a typical line drawing.

B.5.8 Multisection illustrations (Page-based TMs only). Prepare multisection illustrations, when necessary, to identify significant features on an illustration. (Refer to Figure B-1.)

a. Each section of a multisection illustration is identified by a capital letter.

b. Sections may or may not be titled, but if one section is titled, all are titled.

(1) Each title, with the identifying letter as its first character, is centered with respect to the section to which it applies.

(2) Where titles are not used, the identifying letters are centered.

(3) Identifying letters and titles are larger and bolder than any other lettering on the illustration.

c. Sections are clearly separated by lines. Separation by shading is not used.

B.5.9 Multiview illustrations. Multiviews may be prepared when necessary to identify significant features on an illustration. (Refer to Figure B-6.)

a. Each view should be oriented and enlarged as necessary to identify significant features of the item.

b. To show orientation, use arrows or text (i.e., "Rotated 180 degrees.") as it relates to the main illustration.

B.5.10 Foldout and multisheet illustrations (Page-based TMs only). When specified by the acquiring activity, foldout/multisheet illustrations may be prepared. Foldout-foldup pages are not permitted. When an illustration needs to be larger than a single TM page for clarity or to be easily viewed by the TM user, multisheet and foldout presentation should be considered. Multisheet illustrations are the preferred format. When an illustration that normally would be presented as a foldout is instead prepared as a page size multisheet continuous flow diagram (Refer to Figure B-7), the following guidelines should be followed:

a. Allowance should be made on each page for the termination of data within a 7-1/2-inch image area.

b. Data (e.g., nomenclature or symbols), with the exception of horizontal lines, should be placed no closer than 1/8-inch from the image area limit after reduction.

c. Lines should not be vertically displaced during the transition from the image area on one sheet to the next sheet.

B.5.10.1 Multisheet RPSTL illustrations. Multisheet RPSTL illustrations should only be used as specified by the acquiring activity. If used, they should be limited to 3 or 4 sheets. RPSTL information should not be grouped into multisheet illustrations so as to disrupt the top-down breakdown structure.

B.5.11 Exploded views. An exploded view (Refer to Figure B-8) is an illustration that shows a unit separated or disassembled but with all the parts positioned in correct relationship to each other. Exploded views are used in RPSTLs and, when practical, to support removal/installation and disassembly/reassembly instructions. The following guidelines are recommended to ensure clarity of presentation:

a. Index numbers, keyed to a legend, list, or text reference, can be used to identify parts.

b. No more than 20 items should be called out in a 7- by 10-inch area if nomenclature is used.

c. Whenever possible, the average maximum number of callouts within a 7- by 10-inch area should be 70. All callouts (numerals) should be outside the boundaries of the parts being illustrated.

d. If the criteria of subparagraphs b. and c. above cannot be met, use detail views of the figure.

e. If the equipment is of such a nature that it cannot be adequately illustrated by a single exploded view, it may be exploded by subassemblies as separate views. In such cases, locator views can be used, as needed, to orient the user to the proper area. (Refer to B.5.12.)

f. Items should be numbered sequentially, starting with the number 1 (in clockwise, disassembly, or in the order mentioned in text sequence, depending upon how the exploded view is used).

g. To assist in location, the relationship of all parts in an exploded view should be clearly indicated by axis lines.

h. Limit the level of detail to that required to positively identify parts. Excessive detail makes the illustration complex and does not contribute to usability.

i. Use straight (not dog-legged) arrowhead leader lines at all times, if possible.

j. Callout leader lines should not cross each other.

k. Use broken lines for parts shown merely for reference, but not called out. Ensure that the broken lines are legible.

l. Center (axis) lines should be used on exploded views to show parts relationship.

B.5.12 Locator views. When required by the complexity of the equipment or to assist in user orientation of part(s), illustrations should contain a locator view. The overall equipment or item is shown with the area covered by the view highlighted. (Refer to Figure B-2.)

B.5.13 Detail views. A detail view of a part or subassembly should be illustrated when the subject matter cannot be clearly illustrated in the main view. The desired subject matter may be identified with detail letter(s), index number(s), or a hotspot on the main view and illustrated, as required, in the detail. (Refer to Figure B-2.)

B.5.14 Scanned images. Scanned images and photographs should be of such quality and resolution so as to meet reproduction and display requirements.

B.5.15 Cartoons. Do not use cartoon-type drawings and other similar visual techniques unless specified otherwise by the acquiring activity. When used, such drawings should not include copyrighted cartoon characters and should serve a functional purpose.

B.5.16 Diagrams. The following paragraphs describe various types of diagrams that may be required to support the operation and maintenance data contained in the TM.

B.5.16.1 Specification requirements. Use the following specifications as applicable.

TABLE IV. Specifications Requirements for Graphics.

Subject	Equipment Covered	Specification
Abbreviations	All	ASME Y14.38
Drafting Practices Mechanical	Mechanical Electrical and Electronic	ANSI Y14.15-1966 (R1973)
Engineering Drawings	All	ASME Y14.100, ASME Y14.24, ASME Y14.35M, ASME Y14.34M
Graphic Symbols	Electrical and Electronic Mechanical Digital (Logic) Fluid Power	IEEE 315A-1986, IEEE 280-1985 MIL-STD-17 IEEE 91-1984 ANSI Y32.10
Reference Designators	Electrical and Electronic	IEEE 200-1975
Unit Symbols	All	IEEE 260-1978
Logic	All	IEEE 91-1984

B.5.16.1.1 Designations, diagrams, and symbols. Designations, diagrams, graphic symbols, and letter symbols used on illustrations are in accordance with specifications listed in B.5.16.1.

a. As specified by the acquiring activity, new designations, diagrams, and symbols not covered by the specifications may be used if explained in the introduction TMs "How To Use This Manual" or "How To Use This IETM" section.

b. Symbols are spelled out when the symbols cannot be reproduced by the equipment or software used to prepare the final reproducible copy (e.g., plus for +).

B.5.16.1.2 General methods. The specifications listed in B.5.16.1 are to be followed for general methods in acquiring diagrams. Other requirements are as follows,

a. Layout. Most diagrams, position of signals, and components are to be prepared in functional order. (For example, signals are shown in functional order, not connection pin number order.)

(1) Avoid clutter - allow no more than 3 components per square inch or 20 crossed lines per four square inches.

(2) Allow one-eighth inch between parallel lines. Functional flow within diagrams is left-to-right/top-to-bottom, with right-to-left feedback.

(3) Diagrams should be laid out to eliminate jogs in lines where possible.

b. Consistency. A standard referencing system for associated text, signal flow, and other diagrams should be used.

(1) Standard graphic symbols should be used when possible.

(2) If special graphic symbols are required, they should be made visually distinctive from other graphic symbols used and included in a special symbols chart.

(3) Official nomenclature is used for hardware, controls, indicators, switches, etc.; consistent, standard nomenclature is used for functions, signals, etc.

c. Appropriate detail. All information required to fulfill the intended purpose of the diagram should be used; overcrowding should be avoided.

(1) Complete detail should be provided for hardware, function, signal identification, measurement data (voltages and waveforms), explanatory text, connectors, terminal boards, pin numbers, signal names, reference designators, component values and tolerances, replacement components, etc.

(2) All inputs and outputs should be clearly labeled. In single-page/frame diagrams, termination points are shown for every relevant wire, pipe, etc. In multipage/frame diagrams, unterminated line segments should be identified by appropriate symbols with references maintaining continuity from page-to-page or frame-to-frame.

(3) To the extent possible and to keep diagram format consistent for readability, place inputs and associated labels near the diagram left or top edge and outputs and associated labels near the diagram right or bottom edge. The continued portions of multisheet or multiframe diagrams and schematics should align or should be labeled.

(4) For locating information, relevant components are identified on the diagram or referenced/linked to an explanatory listing. Where applicable, the wording on the diagram should correspond exactly with the wording in the text.

d. Inappropriate data. Data not related to the purpose of the diagram should not be included. Pertinent detail of nonrepairable and nonreplaceable components should be held to a minimum.

B.5.16.2 Portraying signal flow. Signal flow, especially for electrical and electronic equipment, critically affects the understandability of diagrams. To assist the TM user in following the diagram, where possible, major signal or pressure flow should be from left to right, and feedback or return flow should be from right to left. For IETMs, signal flow can be indicated using animation or color. As applicable, the methods for portraying signal flow outlined in B.5.16.2.1 through B.5.16.2.3 should be used.

B.5.16.2.1 Signal connections. Signal connections can be portrayed in one of three methods.

a. Point-to-point method. Shows each signal separately with a continuous line to represent its flow. (Refer to Figure B-9.)

b. Highway method. Blends two or more signals together in a single line. (Refer to Figure B-9.) This method is useful in showing the flow of a group of related signals. Any number of signals may be blended together. Any signal that has been blended into the main line is blended out at some other point on the line. Once a signal has been blended out of a line, it can no longer be present on that line. Each signal blended in or blended out of the line should be identified.

c. Interrupted flow method. Use special symbols to interrupt signal flow. This method may be used within a single sheet of a diagram, between sheets/frames of a diagram, or between diagrams. Refer to paragraph B.5.16.2.1.1 for types of special symbols used to interrupt signal flow.

B.5.16.2.1.1 Techniques within a single sheet of a diagram. Interrupted flow within a single sheet diagram is depicted using one of the following techniques.

a. Oval connector. Used to continue signals from one area of a sheet to another area.

(1) Any number of signals may be bracketed together.

(2) Each signal is identified at its source bracket and destination bracket.

(3) Oval connectors should have a unique letter identifier inside the oval. (Refer to Figure B-10.)

(4) The position of the source and destination connectors can be identified by zone numbers or hotlinked. (Refer to paragraph B.5.16.2.1.2b.)

b. Signal returns. Used to continue signal returns within a single sheet/frame of a diagram.

(1) Returns have a unique number identifier inside the network.

(2) Each return is labeled the first time it appears on the diagram (preferably on the left edge of the diagram). (Refer to Figure B-11.)

c. Breakoff symbols. Only power forms, clock pulses, and other multiuse, minor symbols use the breakoff symbol technique.

(1) Each signal is identified adjacent to its breakoff symbols.

(2) The source of signals is shown at the left edge of the diagram. (Refer to Figure B-11.)

B.5.16.2.1.2 Techniques between sheets of a diagram. Interrupted flow between sheets/frames of a diagram should be depicted using one of the following techniques.

a. Boat symbol. Used to continue signals from the right edge of one sheet/frame to the left edge of the following sheet/frame within a multisheet/multiframe diagram (adjacent sheets/frames of a diagram only). Used for single signals only.

(1) Boat symbols have a unique letter inside the boat. (Refer to Figure B-12.)

b. Oval connector. Used to continue signals from one area of a diagram to another. Application is the same as within a single sheet/frame of a diagram. (Refer to Figure B-10.) For page-based TMs, identification of source and destination areas, the following recommended zoning requirements are used for multisheet diagrams:

(1) Vertical zones are numbered; horizontal zones are lettered.

(2) The number of horizontal zones are limited to 10.

(3) Zones are always numbered as below, even if all zones are not used on any sheet.

Sheet1	Starts with Zone 1
Sheet2	Starts with Zone 11
Sheet3	Starts with Zone 21, etc.

B.5.16.2.1.3 Techniques between diagrams. Interrupted flow between diagrams/frames is depicted using one of the following techniques.

a. Block technique. Figure number (name optional), connector and pin numbers, and zone numbers are included. (Refer to Figure B-12.) For IETMs, hotlinks are used in lieu of zone numbers.

b. Oval connectors. Source and destination figure numbers are inserted before zone references. (Refer to Figure B-10.) For IETMs, hotlinks are used in lieu of zone references.

c. Pyramid diagram. Diagram number is included from one diagram to another. (For example, include reference to 1 on diagram 2 and reference to 2 on diagram 1.) (Refer to Figure B-12.) For IETMs, hotlinks are used in lieu of diagram number references.

B.5.16.2.2 Signal difference. Various techniques are available to indicate signal flow, signal importance, and type, such as the following. (Refer to Figure B-13.)

a. Use wide lines to represent major signals.

b. Use special arrowheads to indicate signal types.

c. Use different colors if approved by the acquiring activity. (Refer to B.4.1.9).

B.5.16.2.3 Signal junctions. The relative importance of signals may also be indicated by the way signal junctions are represented. Subordinate junctions are used to indicate differences in signal importance. Coordinate junctions are used to indicate equality in signal importance. (Refer to Figure B-14.)

B.5.16.3 Schematic and functional diagrams..

B.5.16.3.1 Schematic diagrams. Schematic diagrams show every maintenance significant functional component and functionalize complex assemblies which are nonreparable.

a. Piece part details are shown only when replacement is authorized at the maintenance level covered or when understanding is required for fault isolation.

b. For nonrepairable assemblies, all inputs and outputs are shown with enough detail to understand how inputs relate to outputs (complete details for simple circuits and symbols for complex circuits). (Refer to Figure B-15 and Figure B-16.)

B.5.16.3.2 Functional diagrams. Functional diagrams include schematics, wiring and piping diagrams, logic diagrams, flow charts, and block diagrams.

a. Functional diagrams (block diagram only) show the complete system or subsystem on one sheet/frame (if possible). (Refer to Figure B-17.) Methods to be used include functionalizing components; grouping subfunctions into functions; or continuing until the complete system or subsystem can be shown on one sheet/frame.

b. Functional diagrams should provide enough details to relate the input to output signals by using arrowheads to indicate signal flow direction when necessary and specifying signal characteristics and tolerances in pictorial or tabular form. For IETMs, signal flow can be indicated by animation or color.

c. Functional diagrams should account for all maintenance significant components by ensuring the user can relate the schematic diagram to the functional diagram; blocking the components on

the schematic to correspond with blocks on the functional diagram; or providing a table relating components to functional blocks.

d. Functional diagrams should show hardware boundaries by using solid, dashed, or dotted lines; various line weights; or different colors or shades (when approved by the acquiring activity, refer to paragraph B.4.1.9).

B.5.16.3.3 Test point identification symbols. Test points that are not readily identifiable on diagrams and illustrations (e.g. junction of R4 and R12) are considered artificial test points and should be identified by test point symbols. Identification of test points by symbol is not employed where test points are readily identifiable by other means (e.g. test jacks (TP-5), connector pin (J1-M), and relay pin (K4-2) are readily identifiable points and should not be identified by test point symbols). The symbol for artificial test points is composed of an encircled upper case letter (identifying the component on which the test point is located) and an Arabic numeral (in numerical sequence on the component). These test points are referred to in text as test point A1, test point A2, etc. Different letters should be assigned to each component (on a diagram); for example, test points A1, A2 and A3 in component 1, test points B1, B2 and B3 in component 2. All test points should be identified on the diagram by their assigned identifying code.

B.5.16.4 Pictorial diagrams. (Refer to Figure B-4.)

a. Pictorial diagrams are used to show the physical view of components and show relative location and size when doing so aids in the understanding of relative information. When necessary to portray position or relative location, other equipment items may be shown in phantom.

b. All maintenance significant functional components are identified with leader lines.

c. Arrowheads are used to show direction of mechanical action or fluid flow.

d. Data is presented from the user's viewpoint by only using orientations that are clearly visible to the user or IETMs, signal flow can be indicated by animation or color.

e. Unless specified otherwise by the acquiring activity, waveform data should be shown.

(1) When required, waveforms are shown pictorially, and all necessary supporting data should also be shown.

(2) If not provided on functional and schematic diagrams and required in support of maintenance tasks, waveform diagrams should provide the waveforms and nominal values at designated points for normally functioning equipment or systems as seen on an oscilloscope.

B.5.16.5 Cutaway diagrams. Cutaway diagrams (conventional cutaway techniques) are used only when necessary to show the internal functioning or flow. Fluid flow is identified using patterns or color when approved by the acquiring activity. For IETMs, signal flow can be indicated by animation or color. (Refer to Figure B-18.)

B.5.16.6 Logic diagrams. (Refer to Figure B-19.)

a. Logic diagrams are used to show digital circuitry operation. Graphic symbols from IEEE 91-1984 are used. If the logic circuit has no specified symbol, it can be identified with a rectangle that is labeled to show all circuit functions.

b. Power and clock connections are identified in a truth table or are connected using breakoff signals.

c. When necessary for clarity, a truth table or timing diagram should be prepared or should be referenced from another diagram. For logic functions, the truth table timing diagram may be shown inside a block or hotlinked to the block to describe the relation of input to output signals. (Whenever possible, truth tables should be placed in the text area and not on the figure.) (Refer to Figures B-20 and B-21.)

B.5.16.7 Simplified diagrams. Simplified diagrams (Refer to Figure B-22) include key components for explanatory purposes and omit selected components or groups of components, or details for clarity. Simplified circuitry and/or simplified functional divisions indicate excluded or included components in the diagram title.

B.5.16.8 Partial diagrams. Partial diagrams are used to show all circuit details completely and reference all destinations of input or output connections. (Refer to Figure B-23.)

B.5.16.9 Test diagrams. There are two types of diagrams used to support test procedures. Test diagrams (Refer to Figure B-24) are used to show test stimuli, item (or circuitry) under test, and test measurement components. Test setup diagrams (Refer to Figure B-25) are used to show the interconnection between the test equipment and the unit(s) under test. The setup diagram may be presented schematically or pictorially.

a. When diagrams exist for the item under test, a block diagram representation may be used.

b. In TMs containing testing data, the item under test should be emphasized (shown in detail); in test equipment maintenance TMs, the test equipment should be emphasized.

B.5.16.10 Power distribution diagrams. Power distribution diagrams depict components involved in power input, power form generation, and power distribution. They are grouped by power flow. (Refer to Figure B-26.)

B.5.16.11 Pyramid diagrams.

a. Pyramid diagrams are a set of interrelated diagrams consisting of:

(1) A master block diagram.

(2) Detailed block diagrams.

(3) Schematic diagrams.

b. If the equipment covered is complex, several levels of detailed block diagrams may be required. (Refer to Figure B-27.)

B.5.16.12 Wiring and interconnection data. Weapon systems and equipment which have wiring or cabling should include interconnection information in one or more forms such as cable diagrams, wiring diagrams (MIL-HDBK-863), or wire lists/tables. In general, the diagrams should meet the requirements for illustrations and diagrams presented above. The lists and tables should meet the requirements for lists and tables provided in MIL-STD-40051. Additional detailed requirements that apply to this information is given in the following paragraphs. Interconnection information has the following characteristics,

a. Information keyed to the appropriate maintenance level.

b. User experience level requirements met.

c. Diagrams simple and straightforward.

d. Only required data on diagrams.

B.5.16.12.1 Cable diagrams. Cable diagrams are included in a TM if the technician has to install or remove cables when performing installation, assembly, disassembly, modification, service, etc.

a. Cable diagrams provide all the information necessary to make the electrical connection between assemblies, chassis, bays, units, and systems in an easily understood format.

b. Each cable diagram should consist of an illustration and accompanying table. If cable routing is of a special nature, it should be so noted. For very complex systems where routing is of great importance, additional diagrams showing desired cable locations may be necessary. (Refer to Figure B-28.) The accompanying table should meet the following requirements:

(1) Cable entries are listed in numerical order or by preferred connection sequence.

(2) Cable origin is preceded by the cable destination.

(3) Cable origin and destination includes assembly name, assembly jack number, and cable plug number.

(4) Both table and illustration should appear on the same page or facing pages. For IETMs, the table should be hotlinked to the illustration. The table is considered text and is not part of the figure.

c. Cable diagrams show all related connectors. Assembly names and jack numbers should be listed.

d. For simple equipment, a table may not be needed, and a interconnection diagram that actually shows the routing of the cables may be substituted (Refer to Figure B-29). The internal connections of the equipment or assemblies are usually omitted.

B.5.16.12.2 Wiring diagrams.

a. If complete coverage of wiring is included in the schematic, no special wiring diagrams are required.

b. Wiring diagrams provide an illustration of signal flow.

c. Wiring diagrams may also be used to show how to connect wires, when required. (Refer to Figure B-30 and ANSI Y14.15-1966.)

d. Wiring diagrams should include the following requirements.

(1) Each drawing should be limited to an individual system to eliminate overly large foldout illustrations that would be confusing to the user.

(2) Point-to-point wiring between connectors and terminals is preferred.

(3) Continuity of wiring through junction boxes and other equipment should be shown to permit following the wires from their origin to their termination.

(4) Terminal, connector, and wire identifiers that appear on the hardware should be used.

(5) Signal codes are assigned to wires to help the user follow signals in equipment that has complex wiring.

(6) Only the wiring that is appropriate for the level of maintenance for which the TM is written is shown.

(7) A list of components giving the reference designation, nomenclature, location, and access cover (as applicable) for every component for each diagram. For IETMs, every component should be hotlinked to its parts data.

(8) Component outlines use heavier lines than those used for wires.

(9) Every wire or wire segment is labeled with its wire number.

(10) For paged-based TMs, turning any wiring diagram sideways (90 degrees) on a page should be avoided, when possible.

(11) A logical, easy-to-follow technique should be used to show the wire continuation onto other diagrams.

B.5.16.12.3 Wire list. Wire lists, if available, can be used in lieu of wiring diagrams when approved by the acquiring activity. Wire lists are normally prepared for cables and complex wire runs that the technician has to fault isolate and repair. Wire lists are usually computer generated and are being used more and more by weapon system contractors in lieu of wiring diagrams in an effort to reduce design and life cycle costs.

a. Wire lists provide wiring data in tabular format. (Refer to Figure B-31 and ANSI Y14.15-1966.)

b. Connector keying diagrams can be included when necessary.

c. Wire lists are prepared in the following format.

(1) One table in hardware number order should be prepared.

(2) Another table in signal code number order should be prepared.

(3) Wire origin to wire destination should be listed.

(4) Terminal, connector, and wire identifiers that appear on the hardware should be listed.

(5) Only the wiring that is appropriate for the level of maintenance for which the TM is written is listed.

B.5.16.13 Piping diagrams. Weapon systems or equipment, which include piping in their design, are supported with information in the form of piping diagrams. The diagrams should meet the requirements for illustrations and diagrams presented in this handbook. (Refer to Figure B-32.)

B.5.16.14 Electronic items. (Refer to Figure B-33.)

a. Exploded views should not be used to identify electronic items such as components on circuit cards that are not to be disassembled for repair. Item numbers should not be stacked (i.e., showing the item numbers next to a bar at the end of a leader line) unless each item and the item number are shown in a detailed view elsewhere on the illustrations. In the RPSTLs, all repairable electronic items are identified with a reference designator and an item number.

b. Tables are used rather than item leader lines to provide clarity. For page-based TMs, the table(s) should be part of the figure and not part of the textual data. For IETMs, the table should be hotlinked to the parts on the figure. For RPSTLs, the reference designators for electronic items should cross-reference the item numbers used in the associated parts list. (Refer to Figure B-34.)

c. Applicable reference designators are placed above the item number.

B.5.16.15 Charts and graphs as illustrations.

a. Information that would be most usable as a chart or graph should be so presented.

b. Charts and graphs are prepared as illustrations. Instructions should be provided for use and interpretation of complex graphs.

B.5.16.15.1 Line graphs.

a. Clutter. The number of ideas conveyed per graph should be minimized. Line graphs should depict a maximum of four relationships between the axis variables. Lines depicting relationships are to be coded to distinguish one from another.

b. Orientation of axes. If there is a natural orientation for the axes (for example, altitude on the vertical axis) the axes are to be so oriented.

c. Grid lines. The number of grid lines used is such that the user can read values to the required degree of accuracy. Size of the illustration is such that the grid lines should be no less than 0.1 inch apart. Grid lines are lighter than the graph lines and should not obscure detail necessary for proper use of the graph.

d. Graph scales. Graph scales are linear or nonlinear as required for proper comprehension and use. The axes should be labeled to indicate the variables and units of measurement.

B.5.17 Requirements for final reproducible copy (Page-based TMs only).

B.5.17.1 Line drawings, prescreened photographs, digitized artwork, and combination illustrations. When digital files are not required, line drawings should be prepared on a suitable material, capable of maintaining consistent and permanent high-density reproducible values (such as acetate or its equivalent).

B.5.17.1.1 Line drawings.

a. Existing illustrations, photographs, or engineering drawings may be used where they meet the requirements of this document.

b. Line drawings may be prepared from source data and equipment photographs.

B.5.17.1.2 Prescreened photographs. Although not preferred, prescreened photographs are acceptable as final reproducible copy provided they are screened only once. The screen of the final sized illustration should be specified by the acquiring activity. When prescreened photographs are used, they should be clearly marked to indicate prescreening. Unscreened continuous tone photographs and/or original illustrations should be supplied with final reproducible copy.

B.5.17.1.3 Digitized artwork. Continuous tone artwork, whether photographs or drawings, should be clear in detail, sharp in contrast of tones, and have light and shadow in proper relation to a consistent light source. The background should be light enough to contrast fully with the subject photographed and should extend the full width and depth of the photograph or drawing.

B.5.17.1.4 Combination illustrations. Combining photographs or continuous tone artwork with line drawings is not recommended.

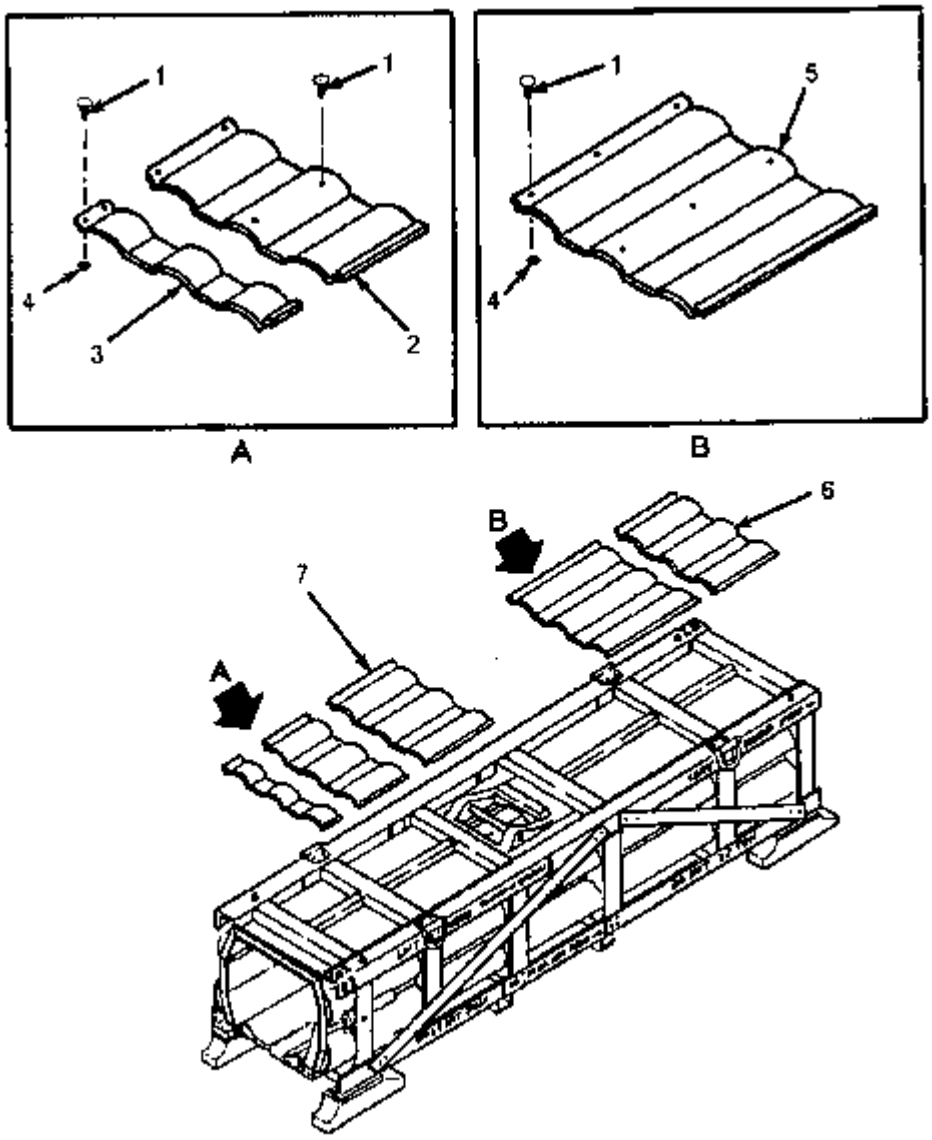

FIGURE B-1. <u>Example of a multisheet illustration with border rules.</u>

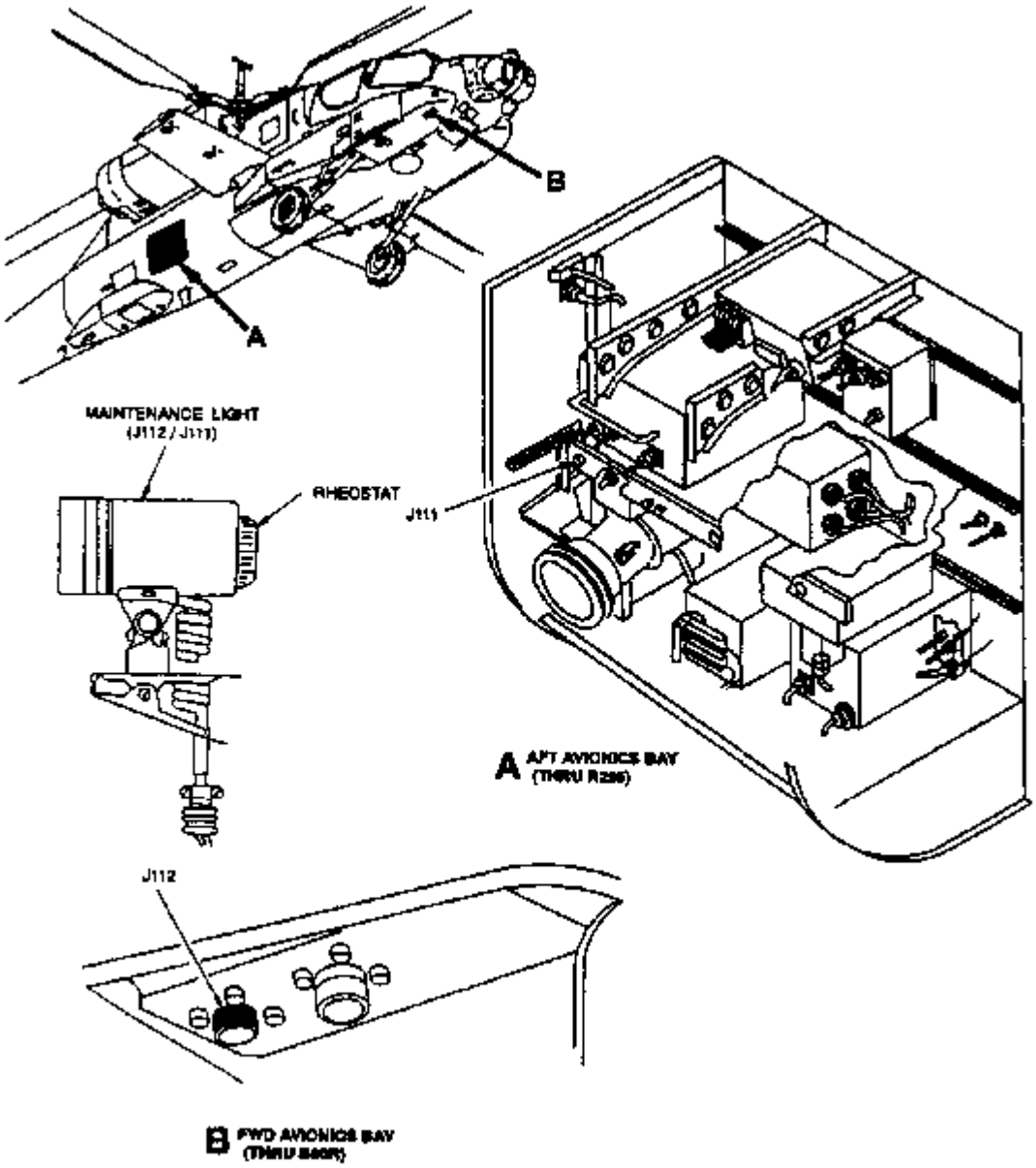

FIGURE B-2. <u>Example of a locator illustration and detail view.</u>

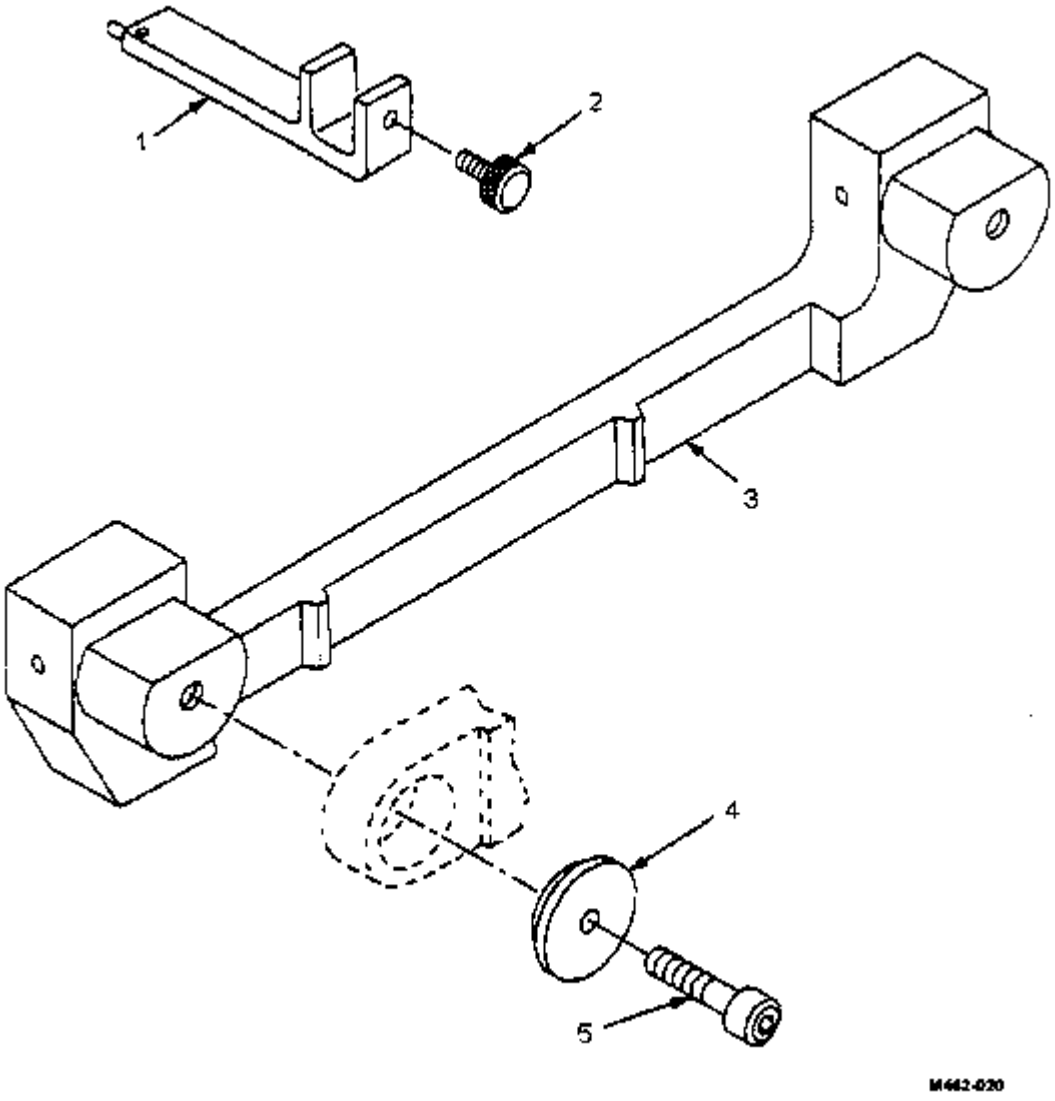

FIGURE B-3. <u>Example of items in phantom, callouts, and illustration identification.</u>

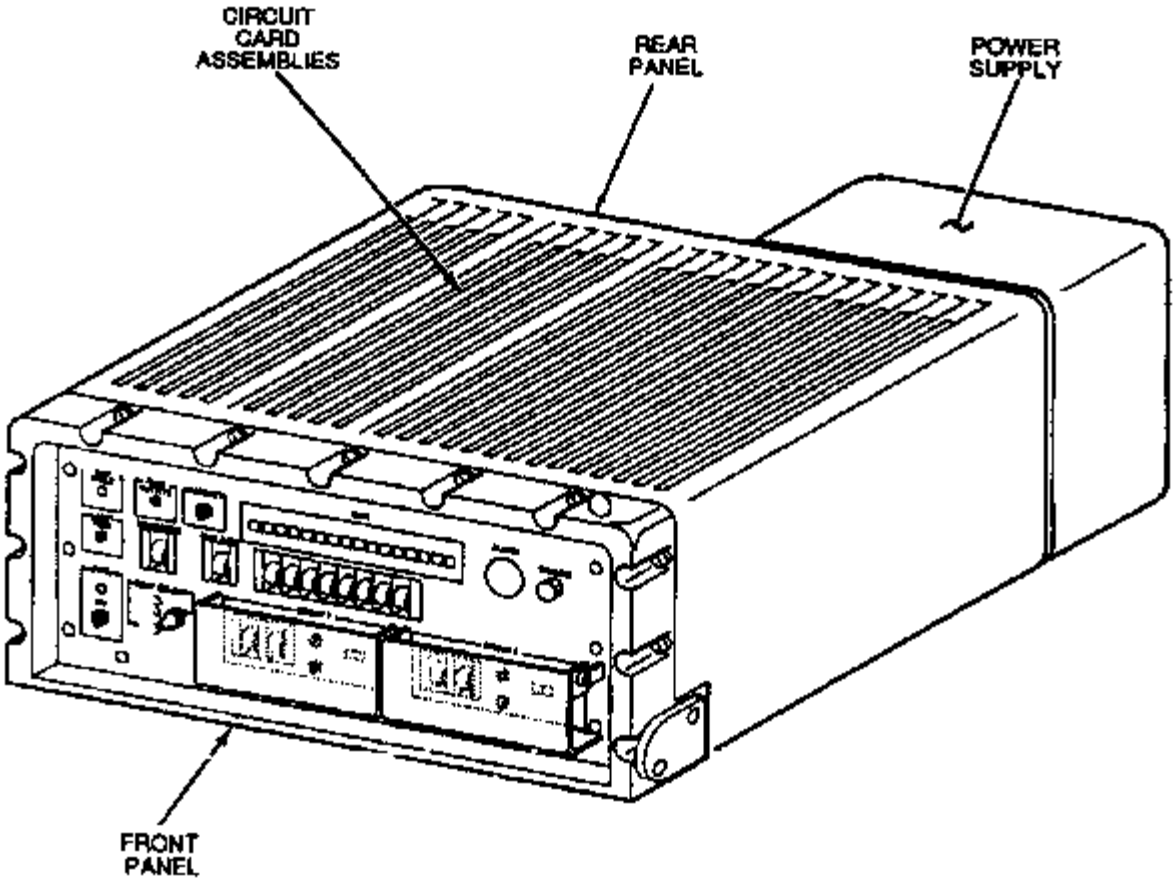

FIGURE B-4. <u>Example of a pictorial diagram with nomenclature.</u>

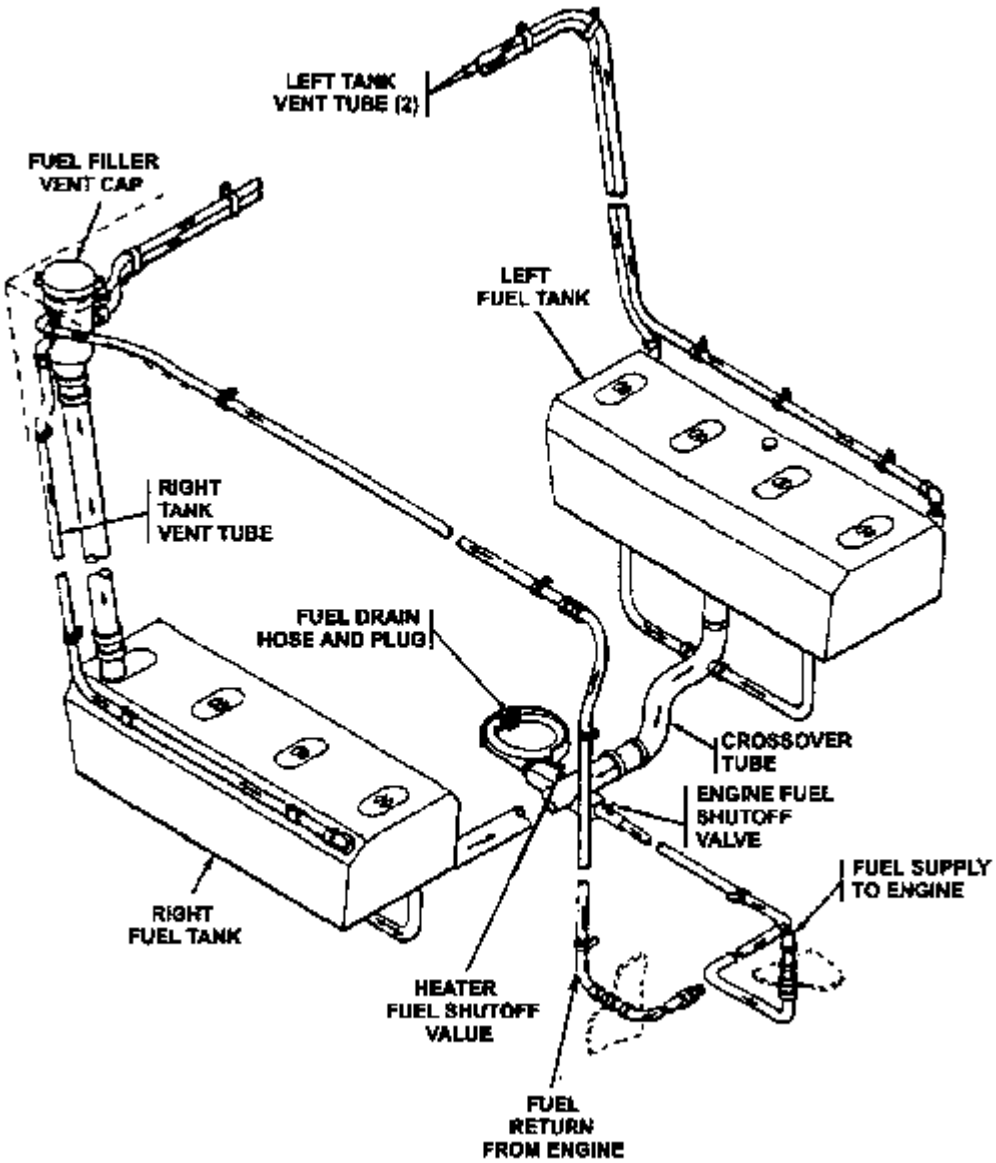

FIGURE B-4. <u>Example of a pictorial diagram with nomenclature</u> - Continued.

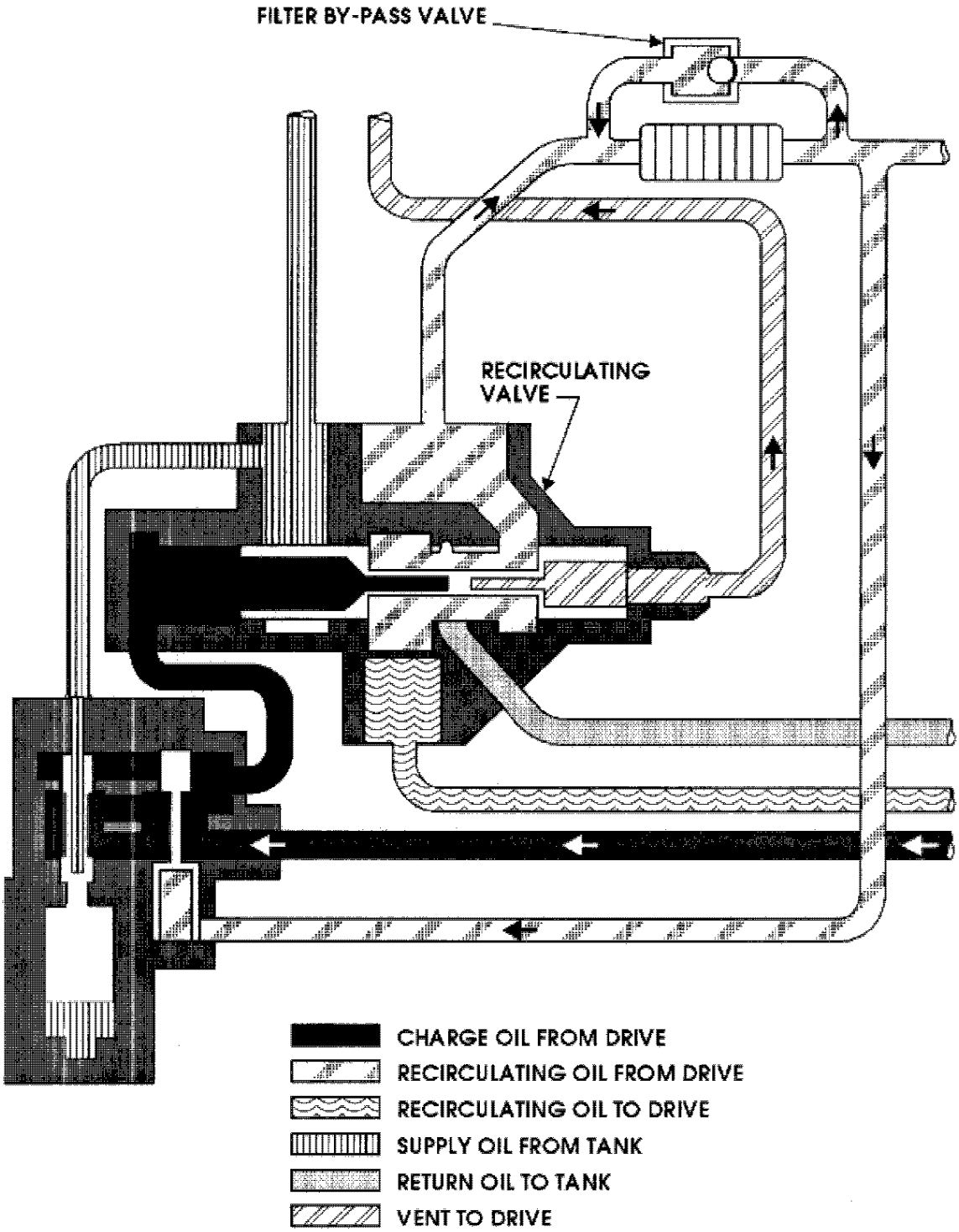

FIGURE B-5. <u>Example of use of patterns instead of color.</u>

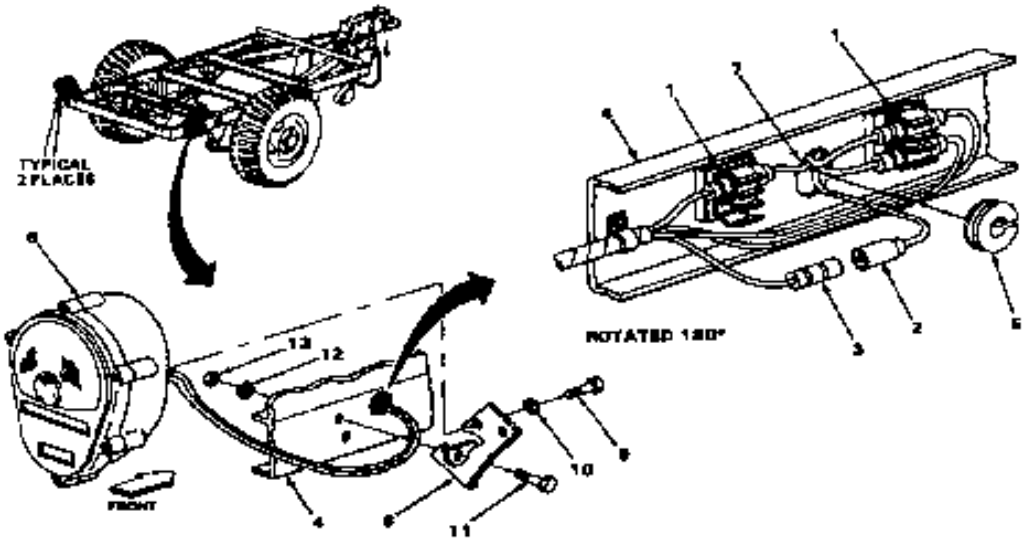

FIGURE B-6. <u>Example of a multiview illustration.</u>

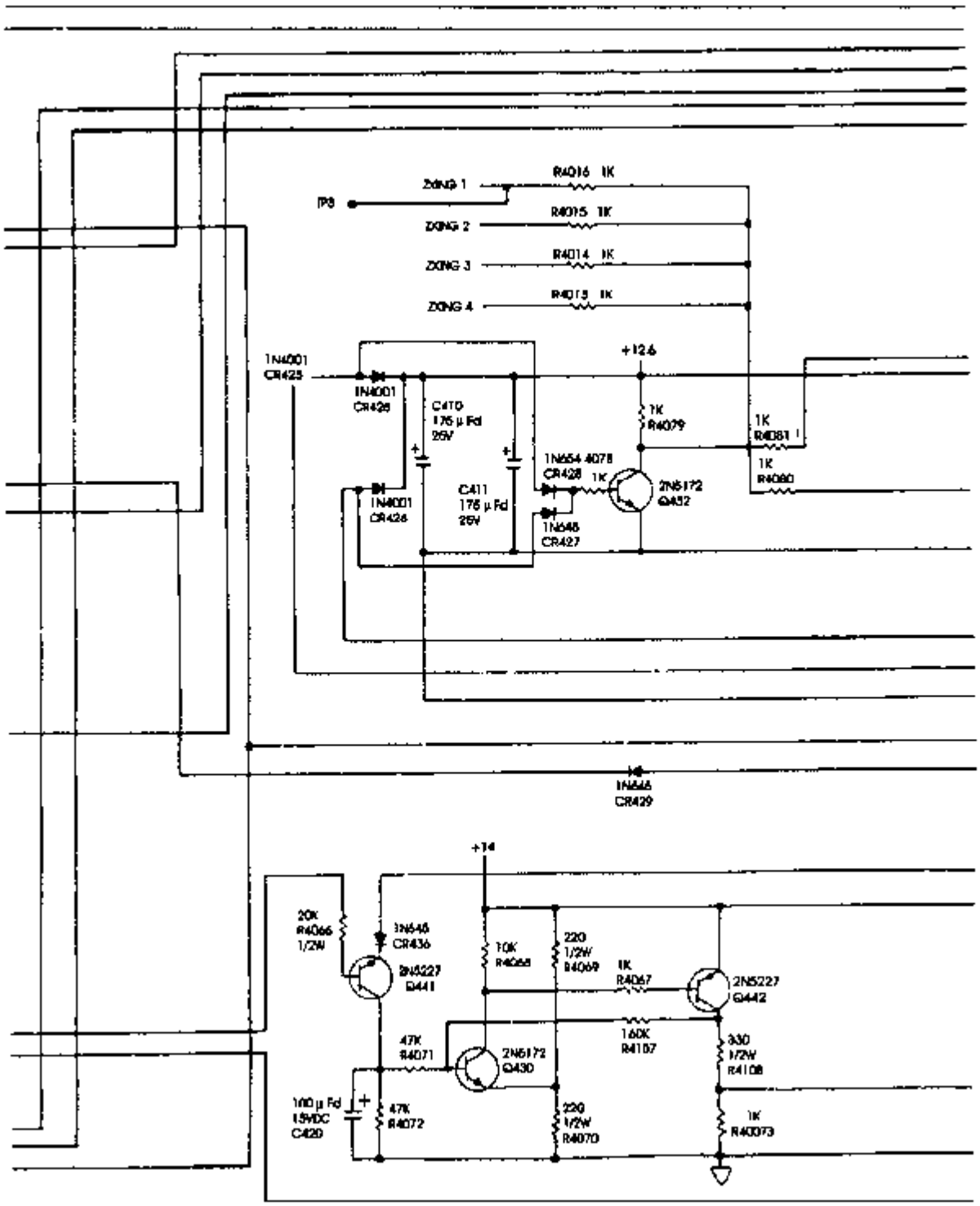

FIGURE B-7. <u>Example of page size multisheet continuous flow diagram.</u>

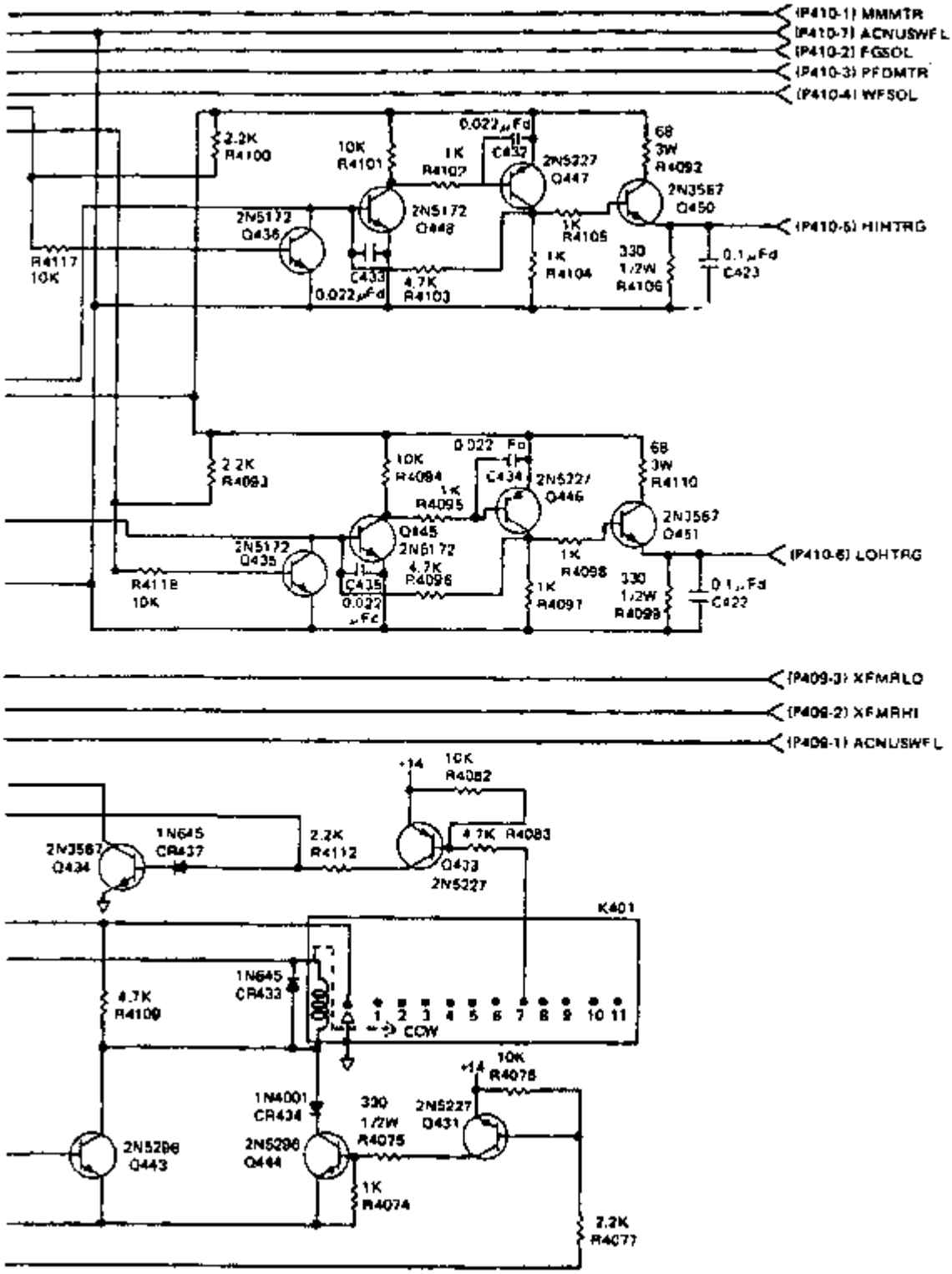

FIGURE B-7. <u>Example of page size multisheet continuous flow diagram</u> - Continued.

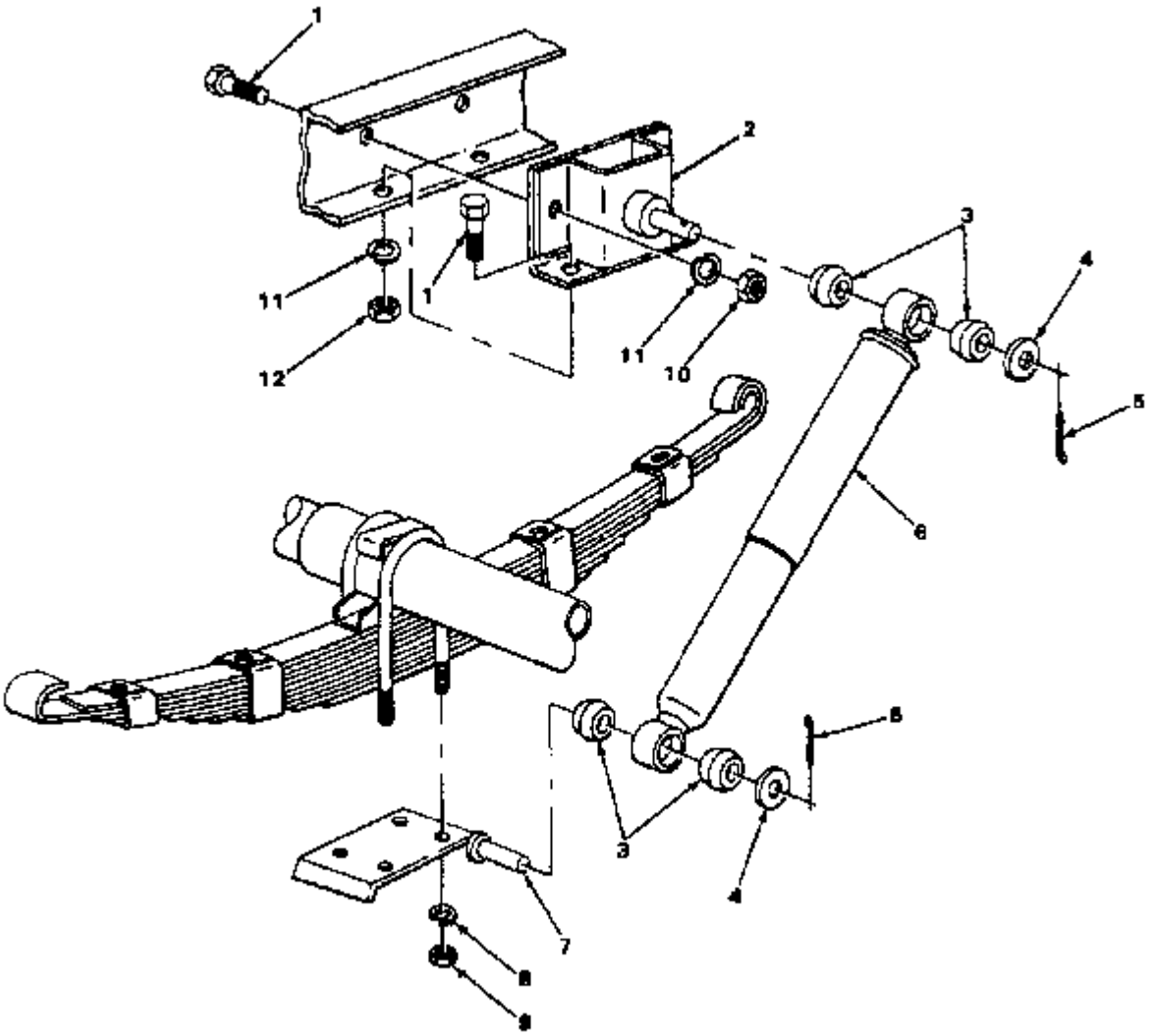

FIGURE B-8. <u>Example of an exploded view illustration.</u>

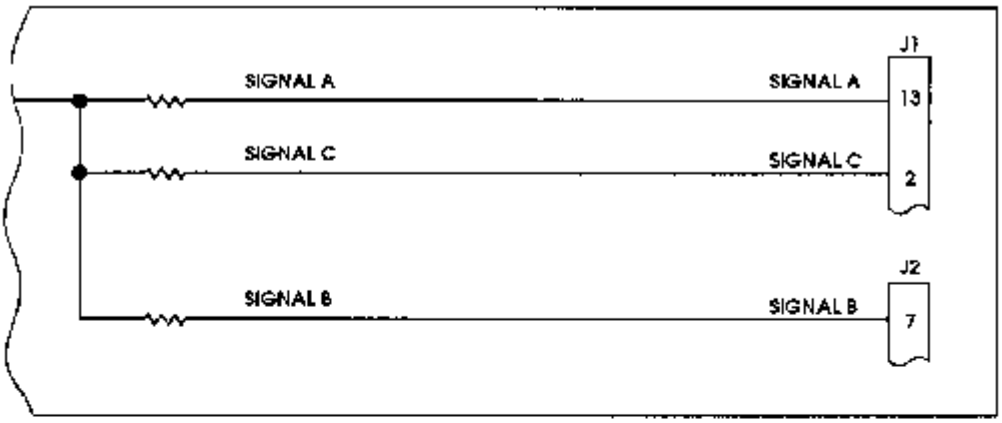

POINT-TO-POINT METHOD FOR SIGNAL FLOW

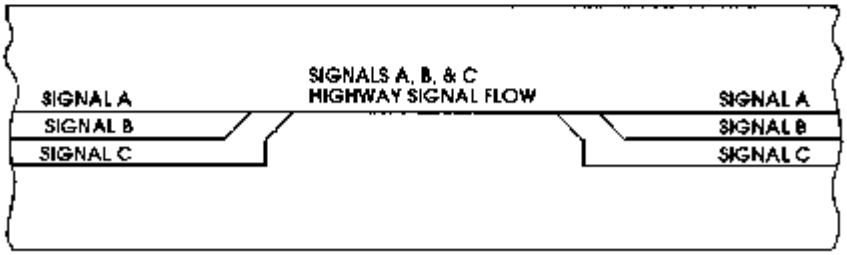

HIGHWAY METHOD FOR SIGNAL FLOW

FIGURE B-9. <u>Example of highway and point-to-point methods for signal flow.</u>

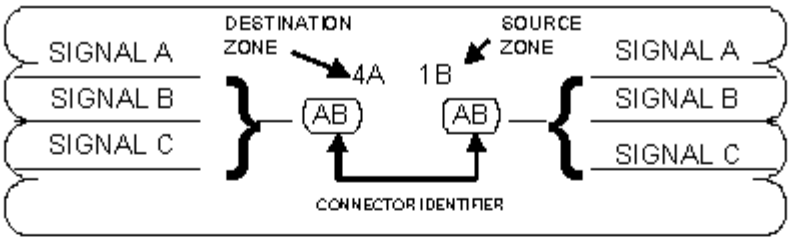

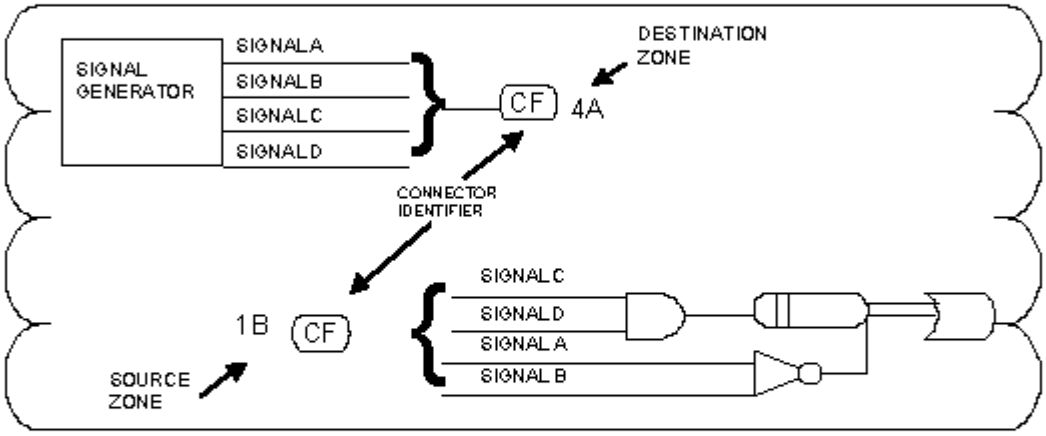

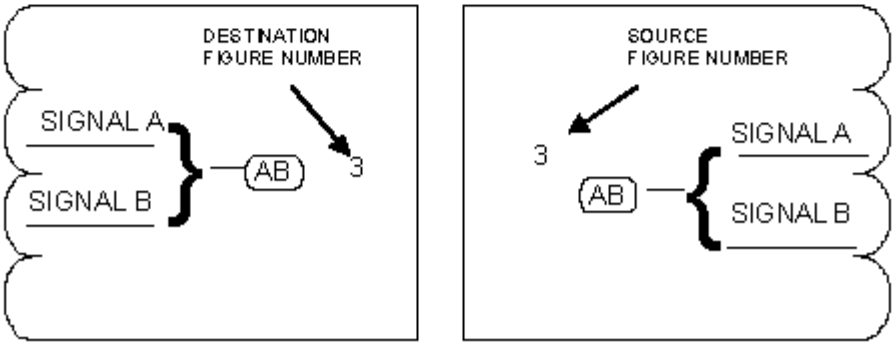

FIGURE B-10. <u>Example of oval connectors to continue signals.</u>

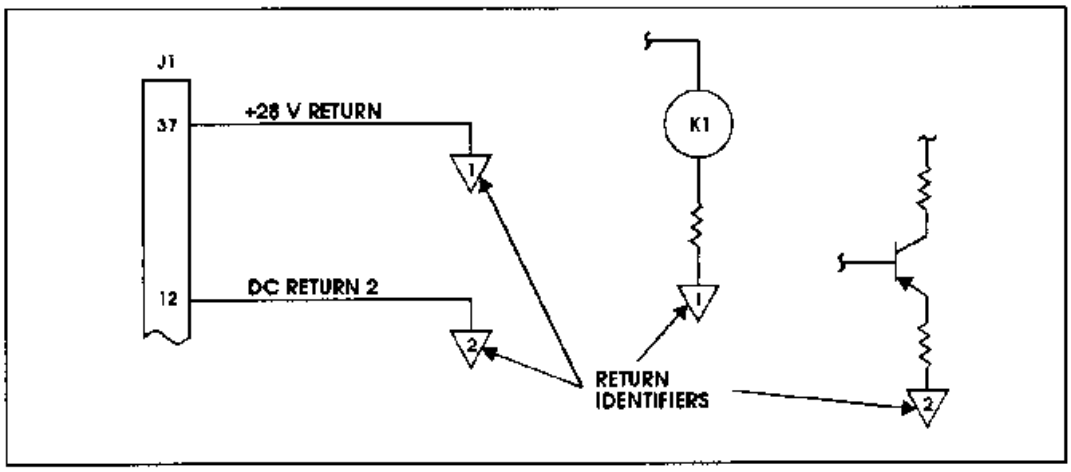

SIGNAL RETURNS USED TO CONTINUE SIGNAL

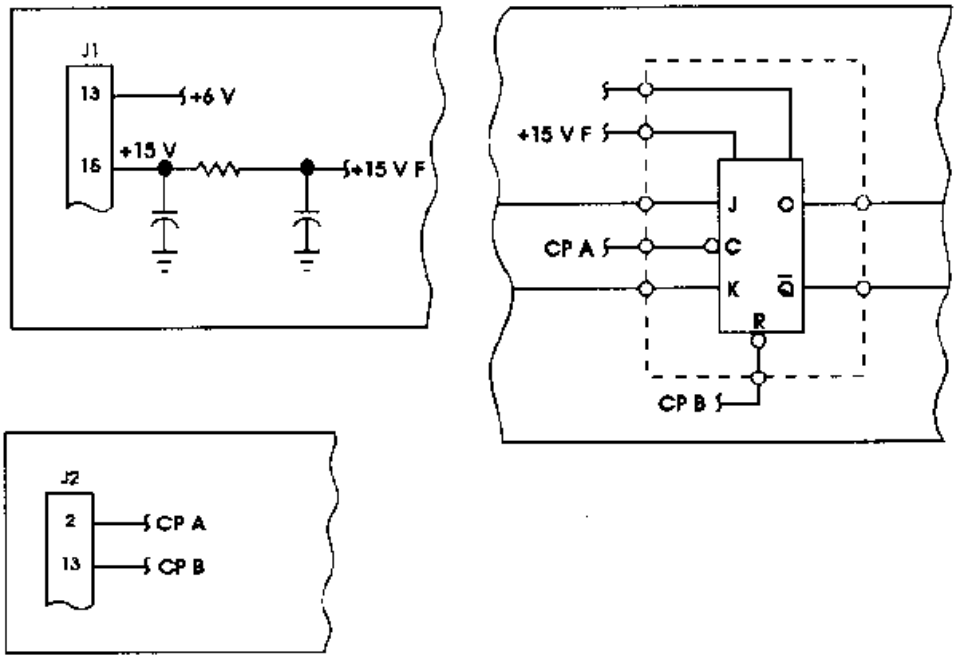

BREAKOFF SYMBOLS USED TO CONTINUE SIGNALS

FIGURE B-11. <u>Example of signal returns and breakoff symbols to continue signals - single sheet diagram.</u>

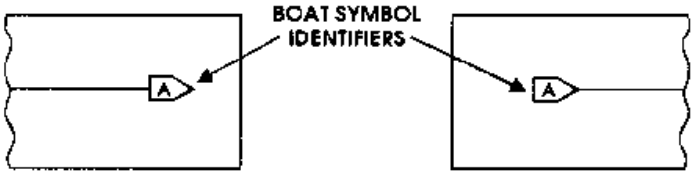

BOAT SYMBOLS USED TO CONTINUE SIGNALS
BETWEEN ADJACENT SHEETS OF A DIAGRAM

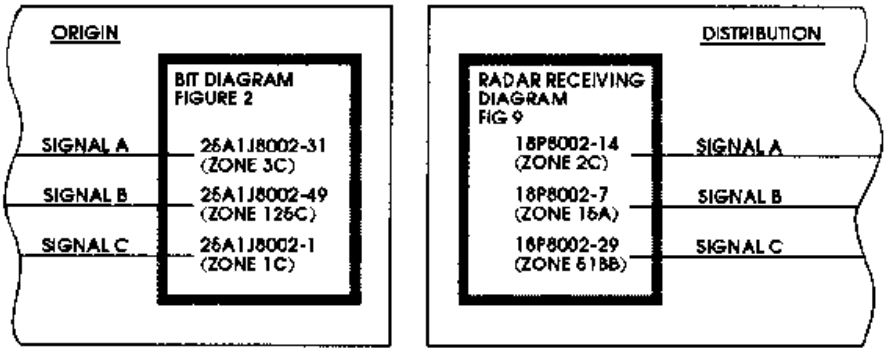

BLOCK TECHNIQUE FOR CONTINUING SIGNALS BETWEEN DIAGRAMS

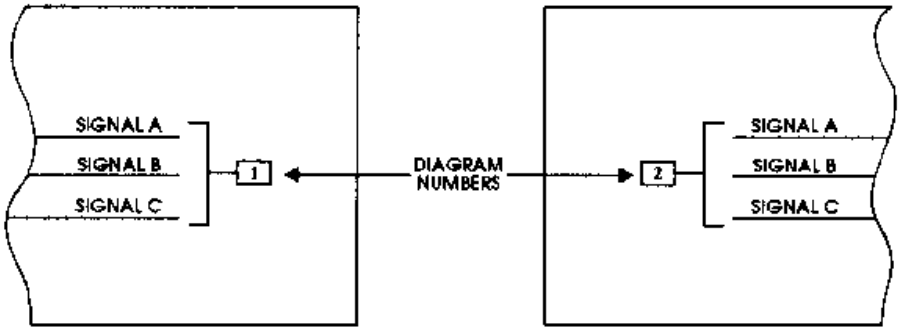

PYRAMID DIAGRAMS INTERDIAGRAM SIGNAL CONTINUATION

FIGURE B-12. <u>Example of boat symbols, block technique, pyramid method to continue signals -multisheet diagram.</u>

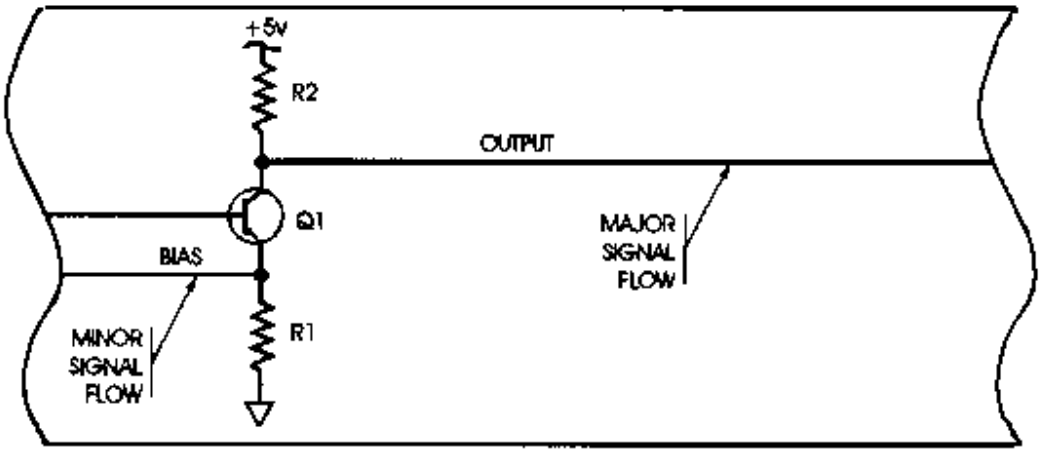

LINE WIDTH CODE USED TO INDICATE SIGNAL IMPORTANCE

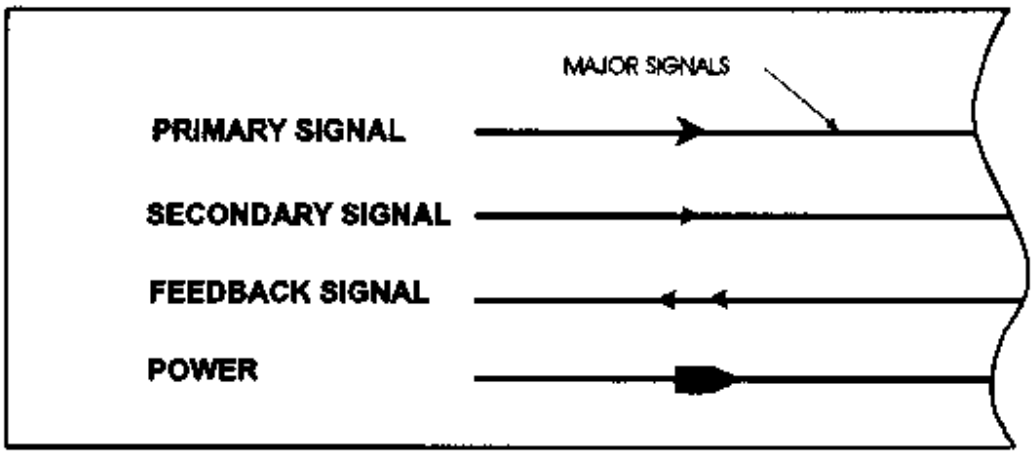

ARROWHEADS USED TO INDICATE SIGNAL TYPES

FIGURE B-13. Example of signal difference techniques.

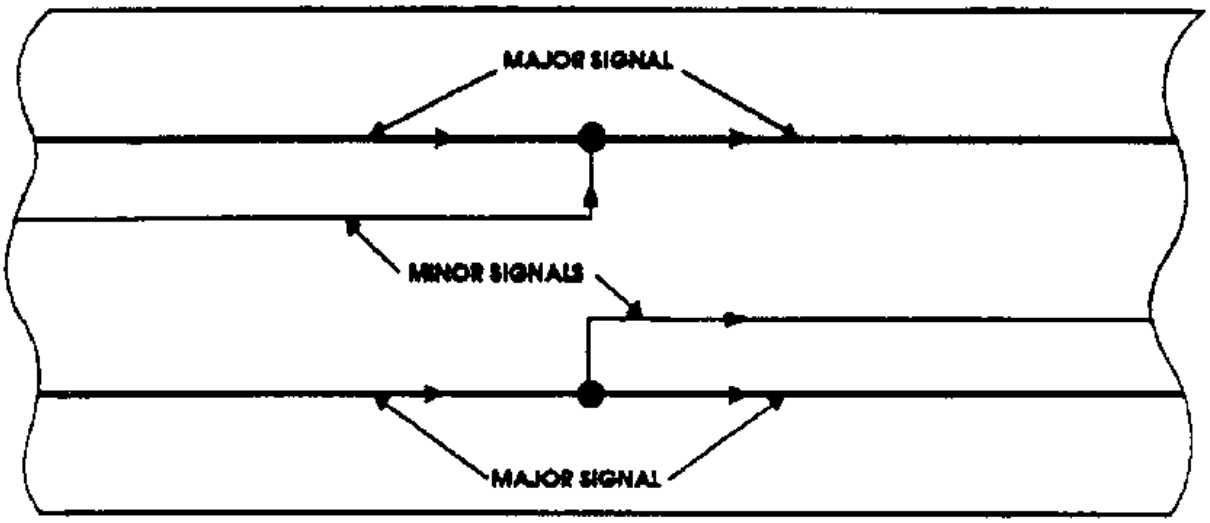

SUBORDINATE JUNCTIONS USED TO INDICATE DIFFERENCES IN SIGNAL IMPORTANCE

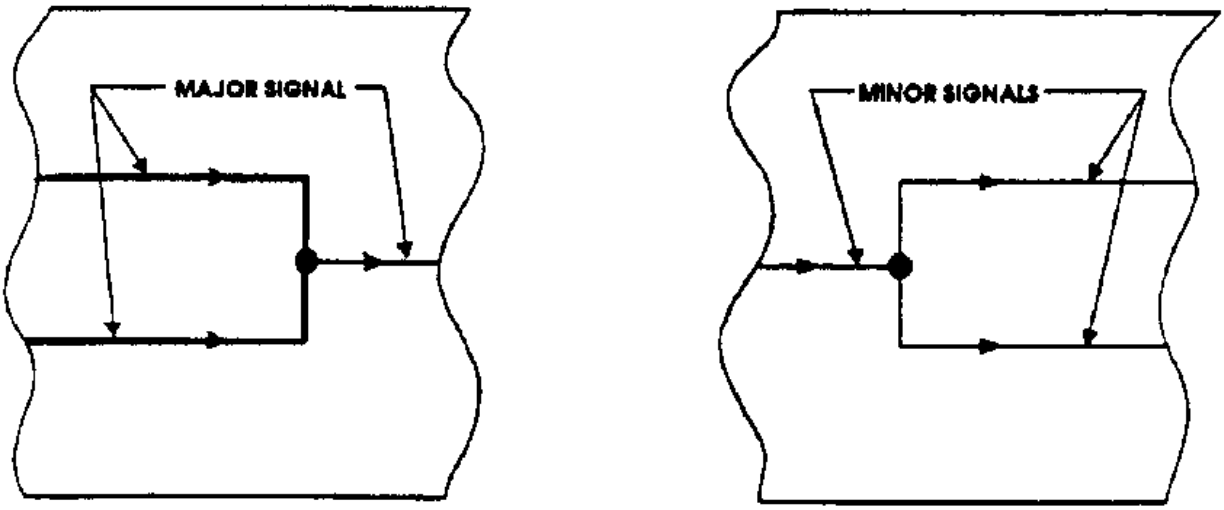

COORDINATE JUNCTIONS USED TO INDICATE EQUALITY IN SIGNAL IMPORTANCE

FIGURE B-14. <u>Example of subordinate and coordinate junctions.</u>

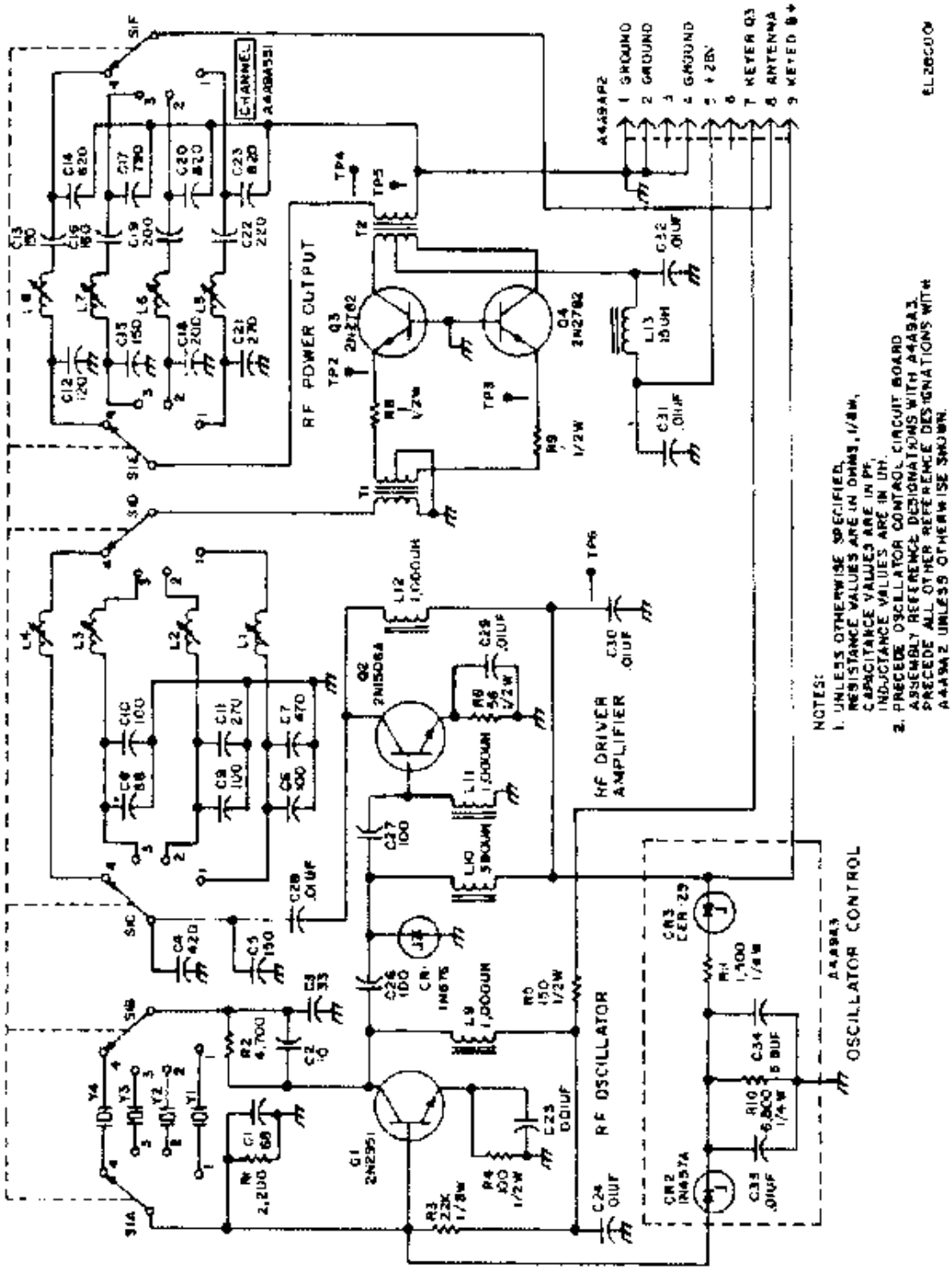

FIGURE B-15. Example of hardware schematic diagram.

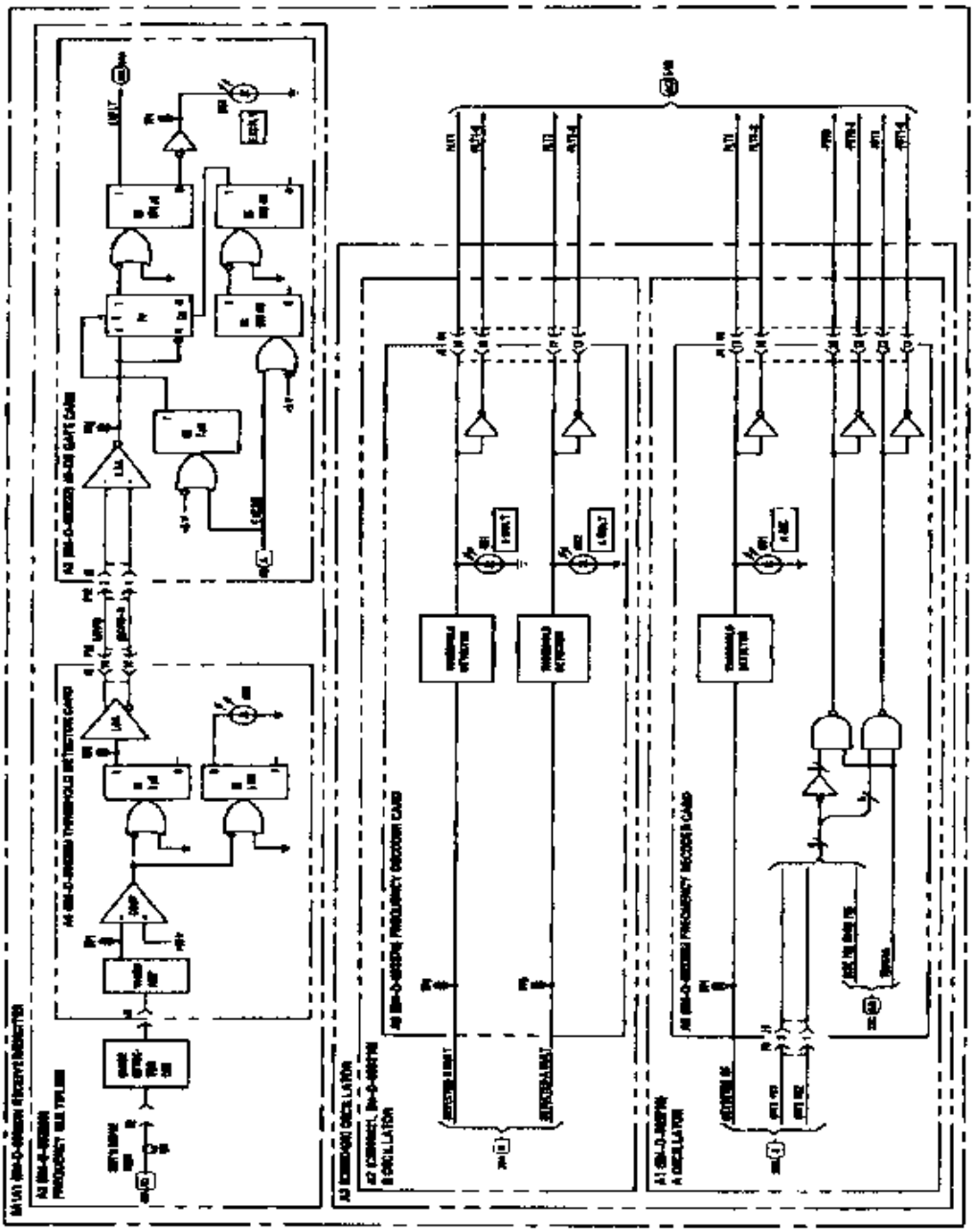

FIGURE B-16. Example of a functional schematic.

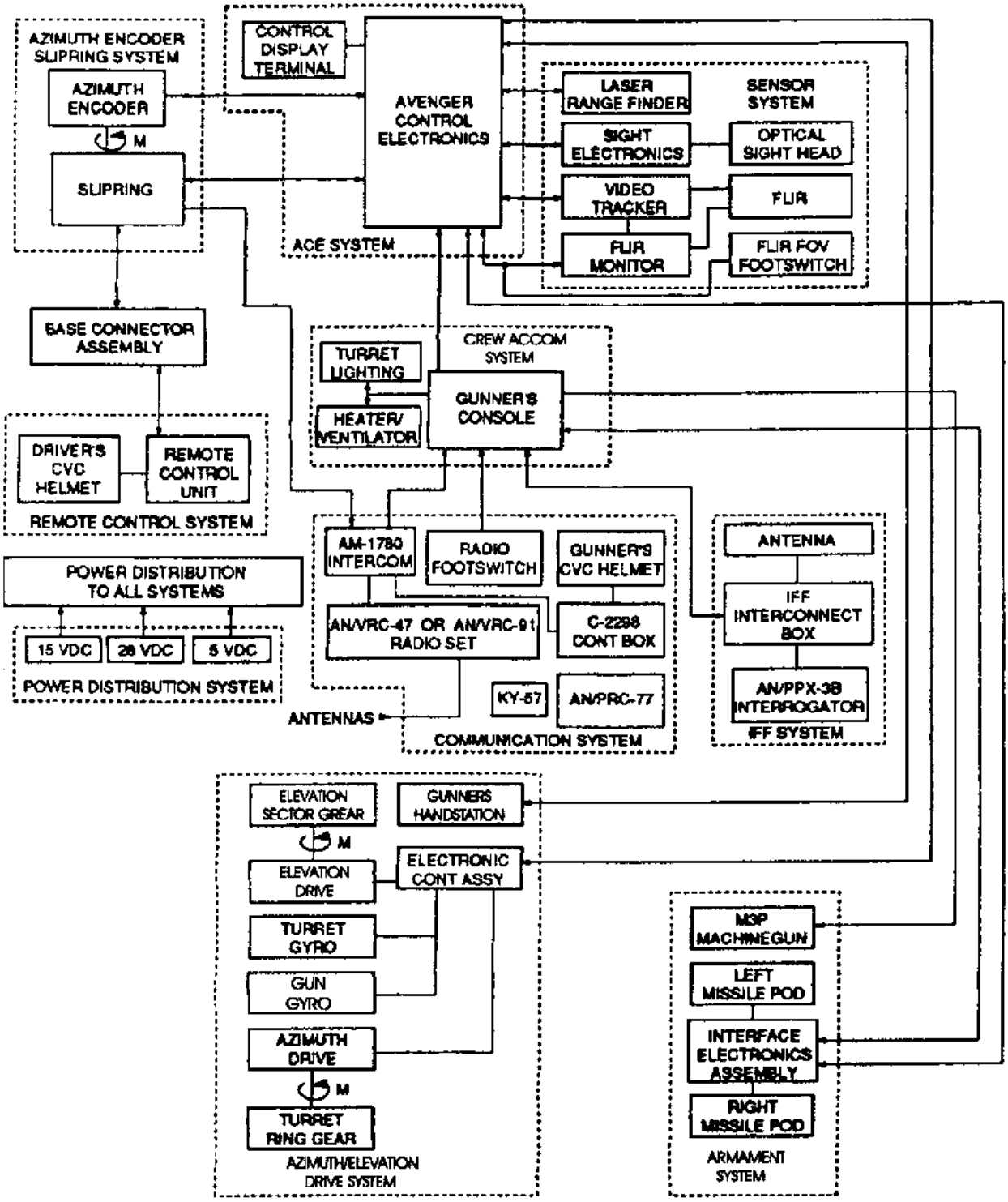

FIGURE B-17. <u>Example of a functional block diagram.</u>

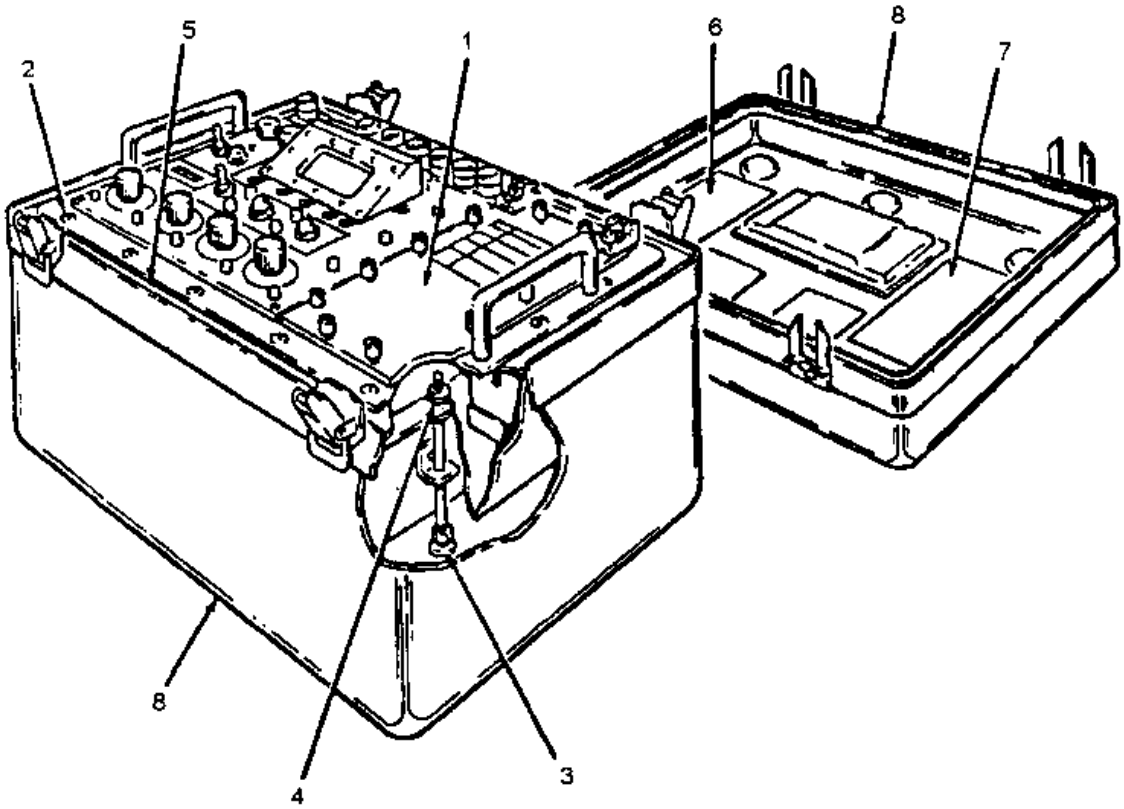

FIGURE B-18. Example of a cutaway diagram.

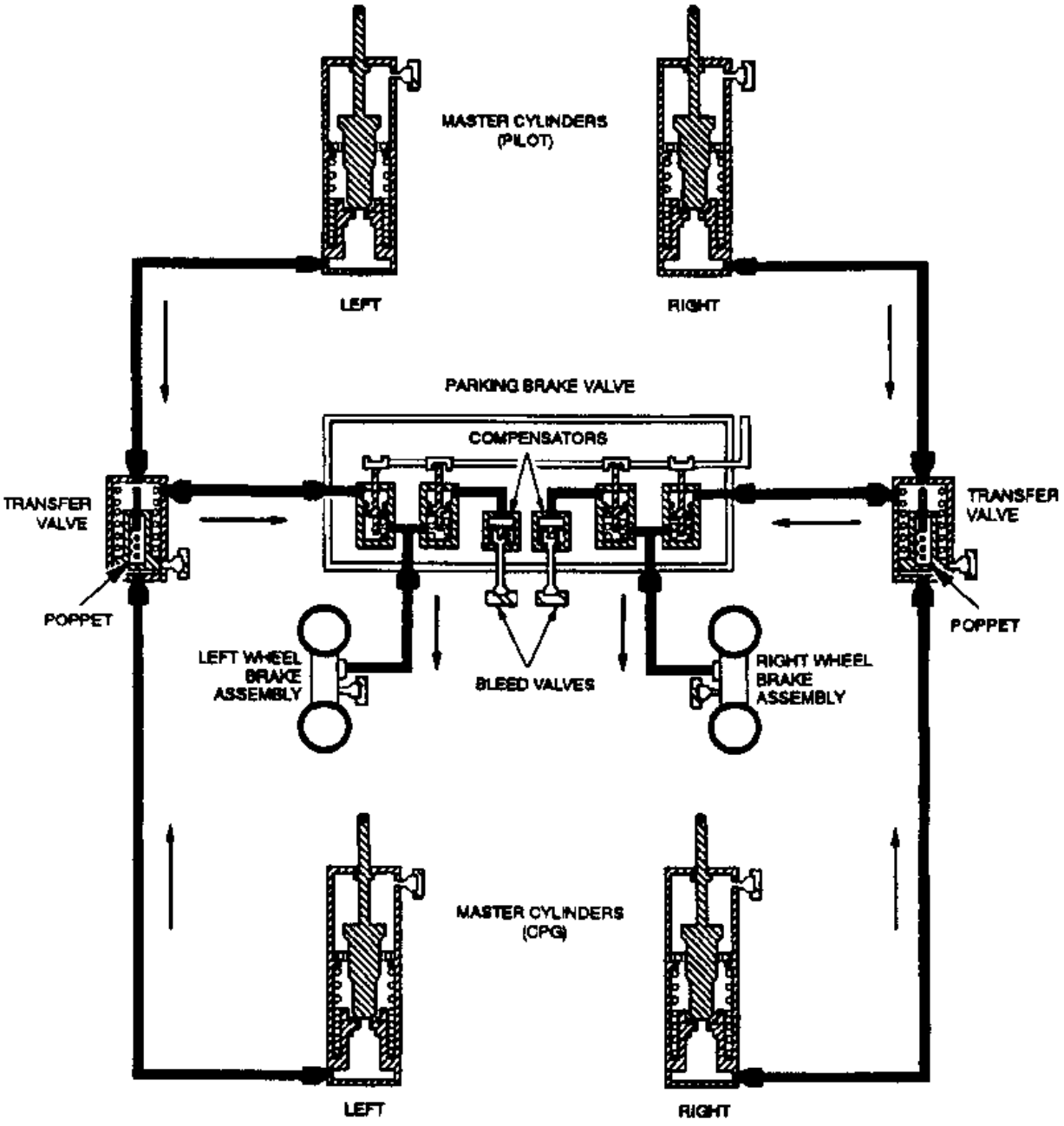

FIGURE B-18. <u>Example of a cutaway diagram</u> - Continued.

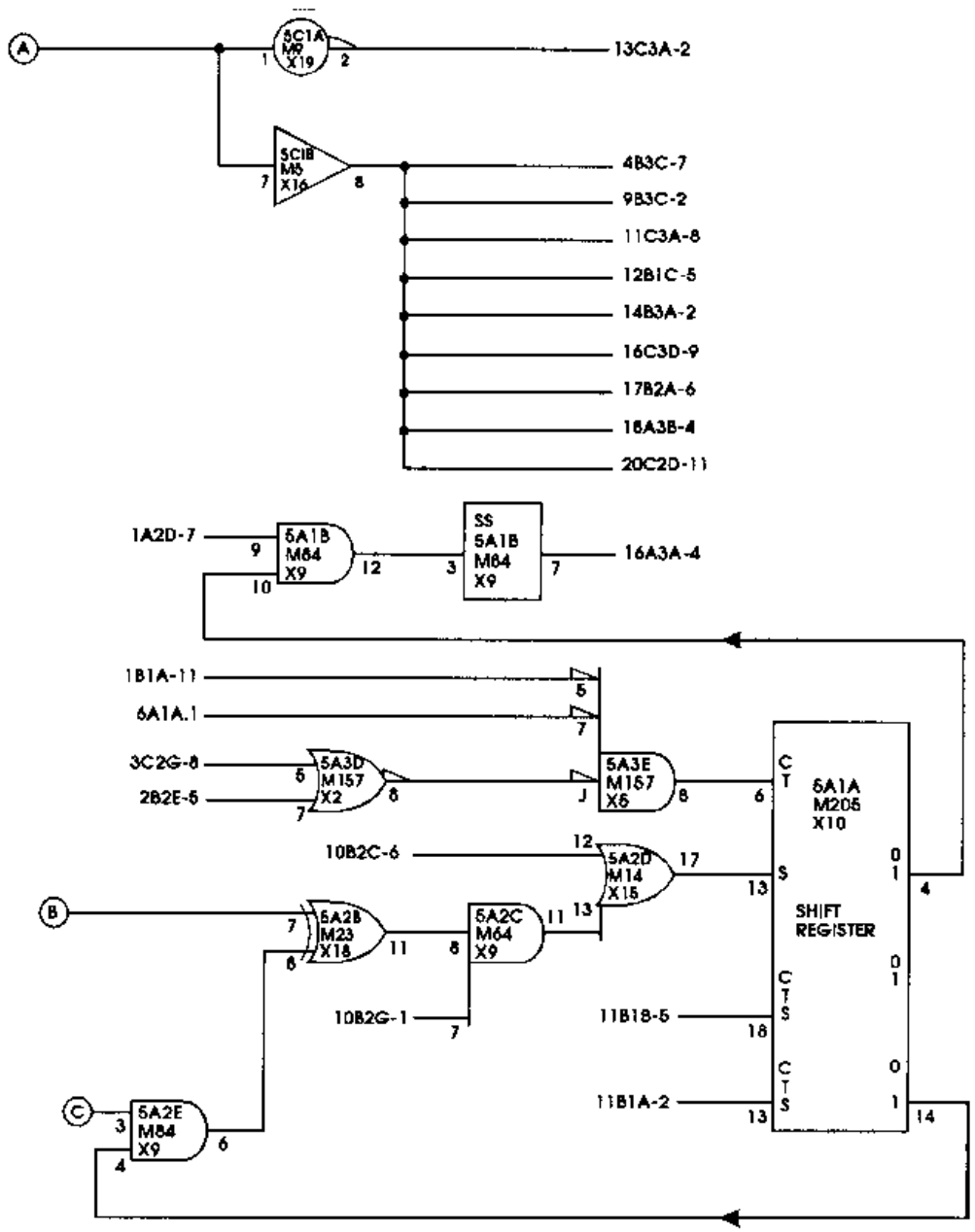

FIGURE B-19. <u>Example of a logic diagram.</u>

J - $\overline{K}$ FLIP-FLOP TRUTH TABLE					
STARTING CONDITION (OUTPUT)		INPUT CONDITION		RESULT AT END OF CLOCK PULSE (OUTPUT)	
A	B	J	$\overline{K}$	A	B
L	H	L	L	NO CHANGE	
		L	H	NO CHANGE	
		H	L	H	L
		H	H	H	L
H	L	L	L	L	H
		L	H	NO CHANGE	
		H	L	L	H
		H	H	NO CHANGE	
A	B	SET	RESET	RESULT (OUTPUT)	
L	H	H	H	NO CHANGE	
		L	H	H	L
		L	L	DISALLOWED STATE	
		H	L	NO CHANGE	
H	L	H	H	NO CHANGE	
		L	H	NO CHANGE	
		L	L	DISALLOWED STATE	
		H	L	L	H

THE J-$\overline{K}$ FLIP-FLOP IS A MULTIPURPOSE STORAGE ELEMENT WHEREIN THE K INPUT IS INTERNALLY INVERTED. DEPENDING ON THE WIRING AT THE J-$\overline{K}$ INPUTS, THIS FF CAN BE CONFIGURED TO FUNCTION AS A J-K TYPE FF, J-$\overline{K}$ TYPE FF, D-TYPE FF OR A T-TYPE (TOGGLE) FF.

FIGURE B-20. Example of a truth table.

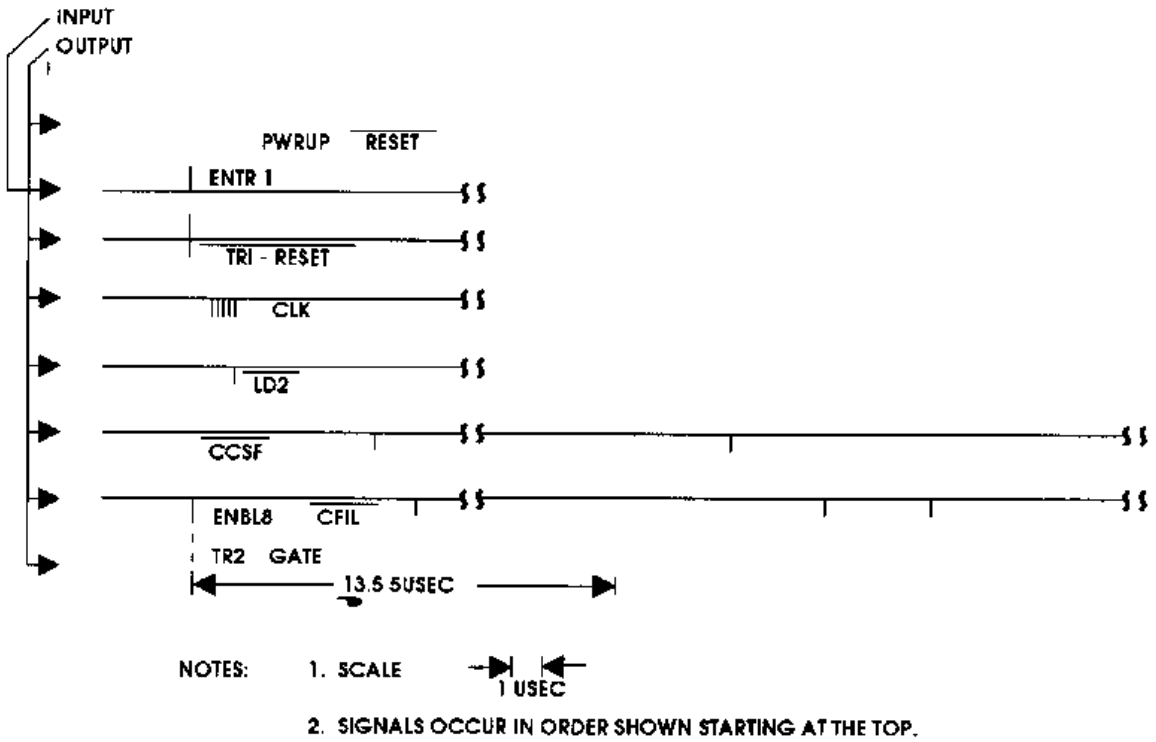

FIGURE B-21. Example of a timing diagram.

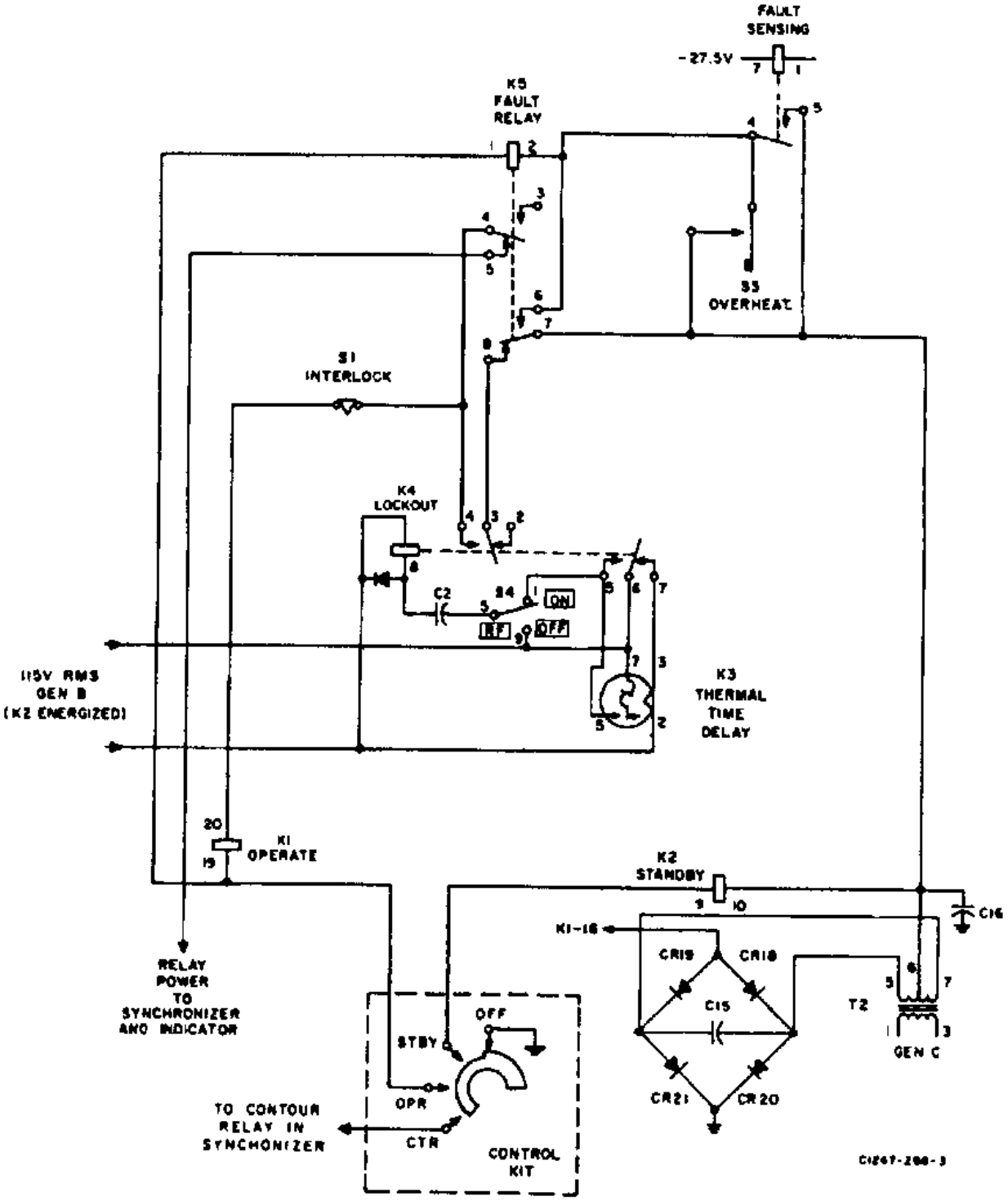

FIGURE B-22. <u>Example of a simplified diagram.</u>

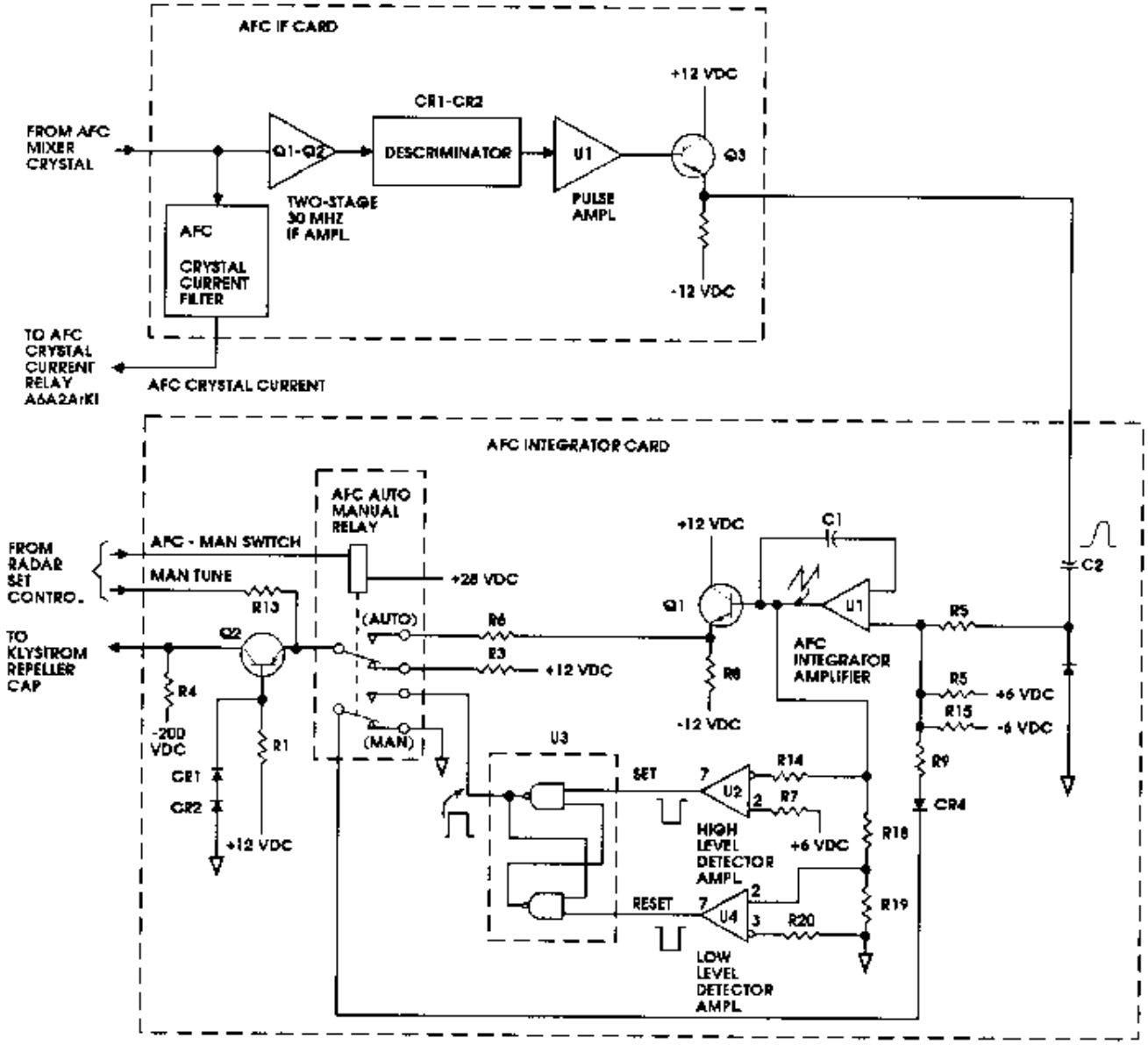

FIGURE B-23. <u>Example of a partial diagram.</u>

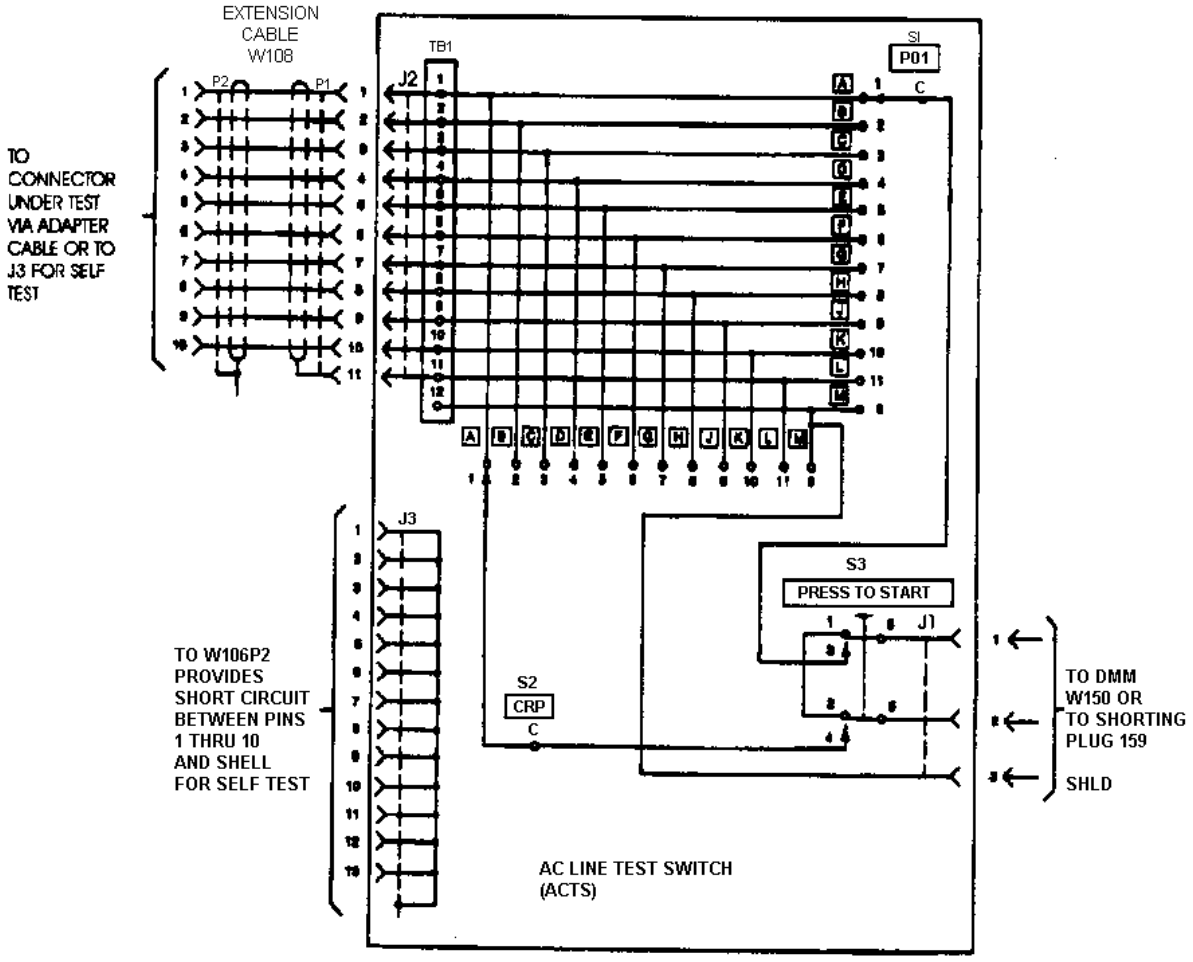

FIGURE B-24. <u>Example of a test diagram.</u>

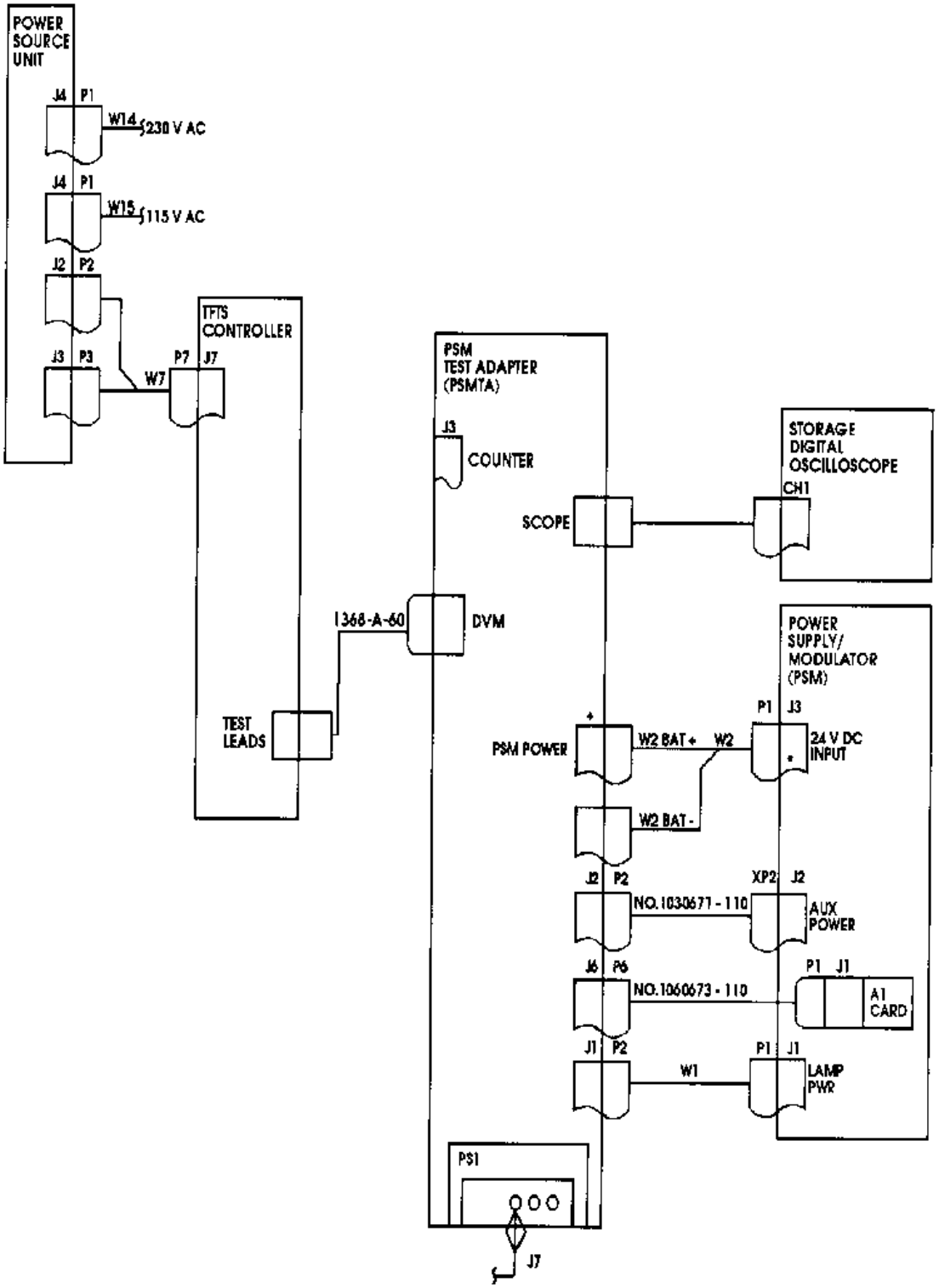

FIGURE B-25. <u>Example of a test setup diagram</u>

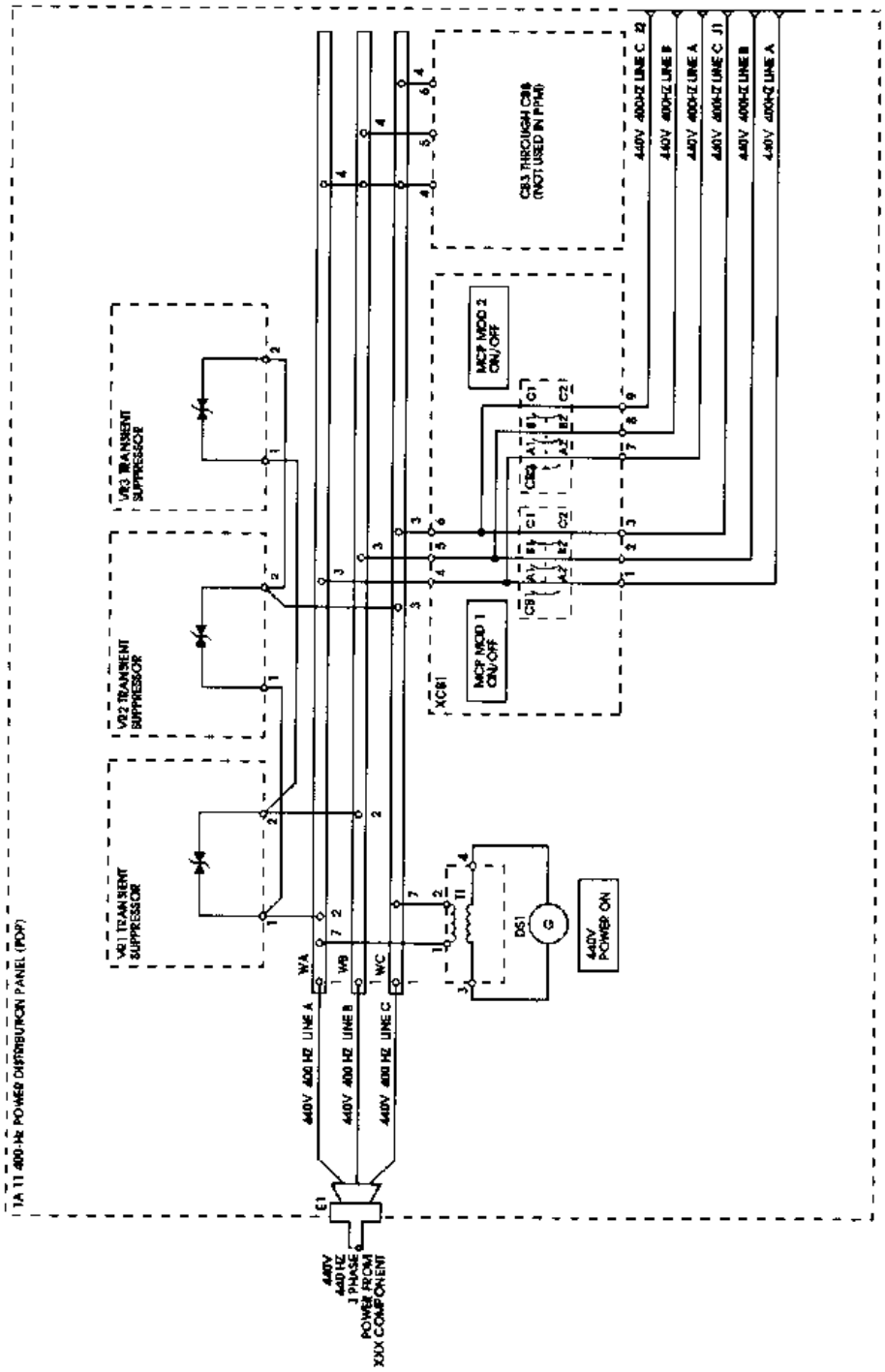

FIGURE B-26. <u>Example of a Power Distribution Diagram.</u>

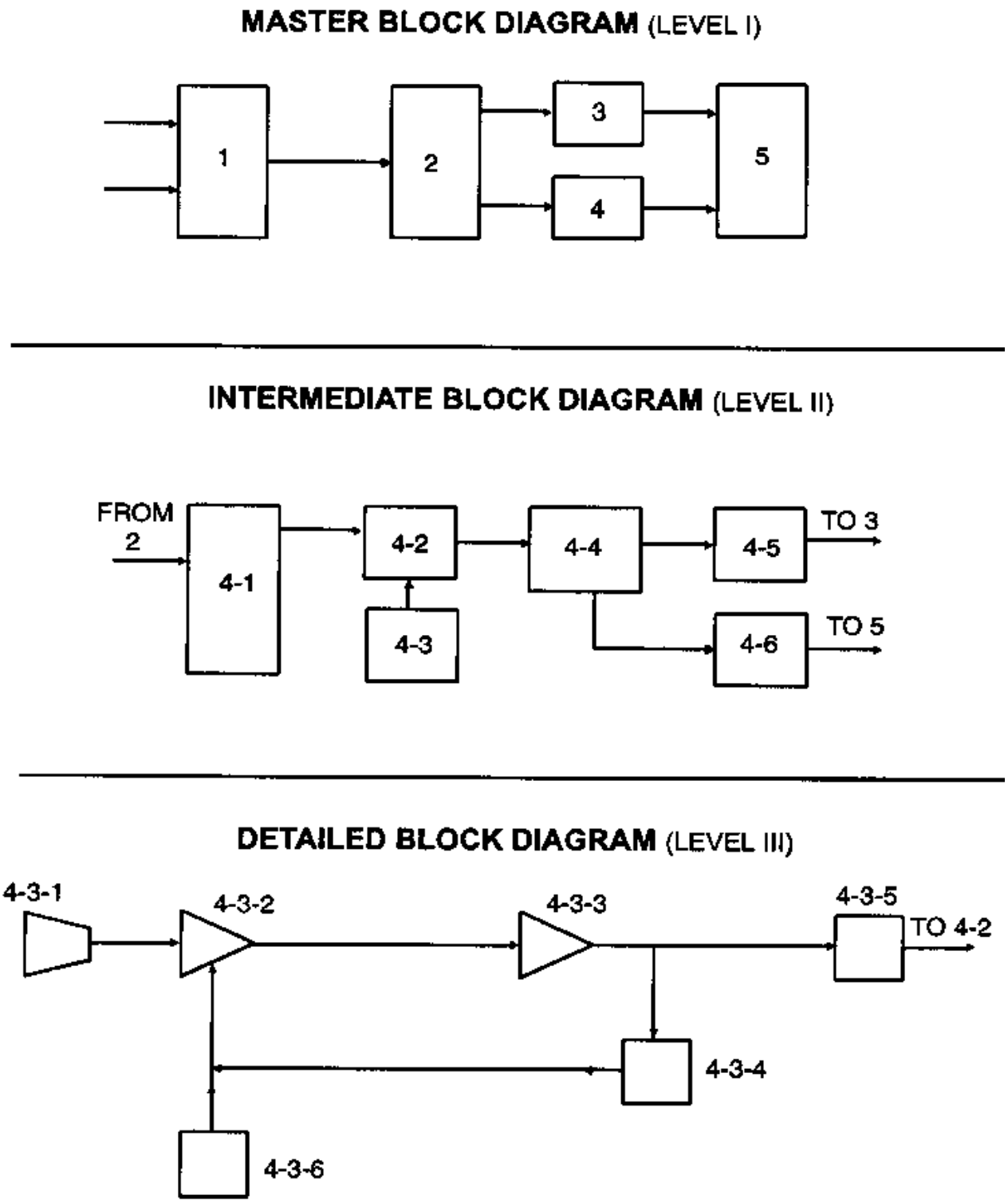

FIGURE B-27. <u>Example of a pyramid diagram.</u>

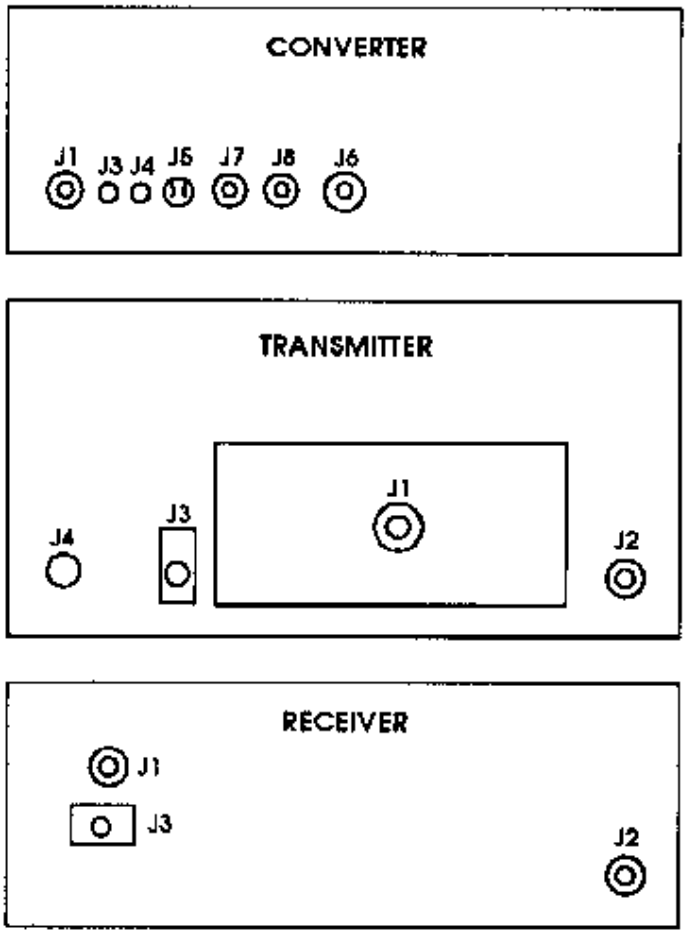

==========

CABLE	FROM			TO		
	ASSEMBLY	JACK	CABLE PLUG	ASSEMBLY	JACK	CABLE PLUG
W101	CONVERTER	J1	P1	RECEIVER	J3	P2
W102	CONVERTER	J5	P1	RECEIVER	J1	P2
W103	CONVERTER	J7	P1	TRANSMITTER	J2	P2
W104	CONVERTER	J8	P1	RECEIVER	J2	P2
W105	CONVERTER	J6	P1	TRANSMITTER	J3	P2
W106	CONVERTER	J3	P1	TRANSMITTER	J4	P2
W107	CONVERTER	J4	P1	TRANSMITTER	J1	P2

FIGURE B-28. Example of a cable diagram illustration with table.

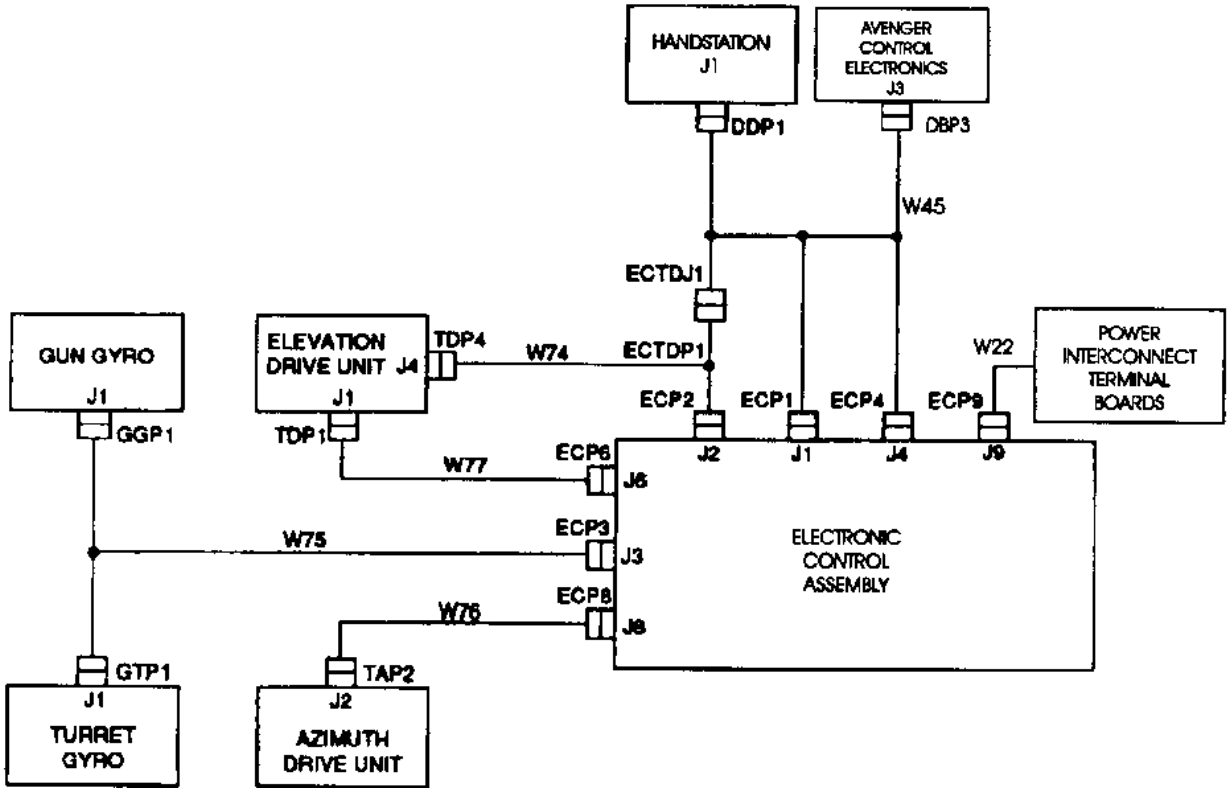

FIGURE B-29. <u>Example of a cable interconnect diagram.</u>

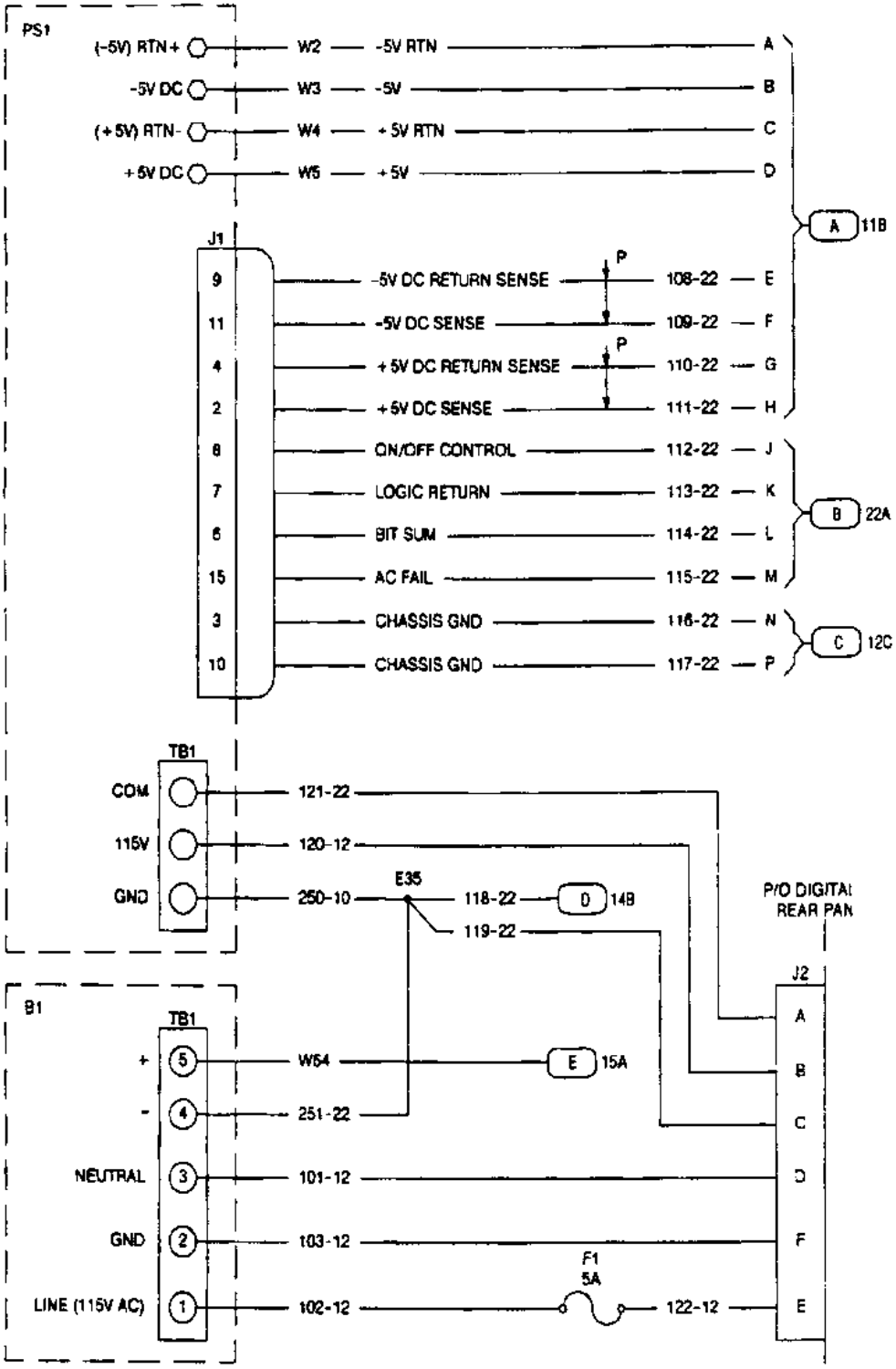

FIGURE B-30. Example of a wiring diagram.

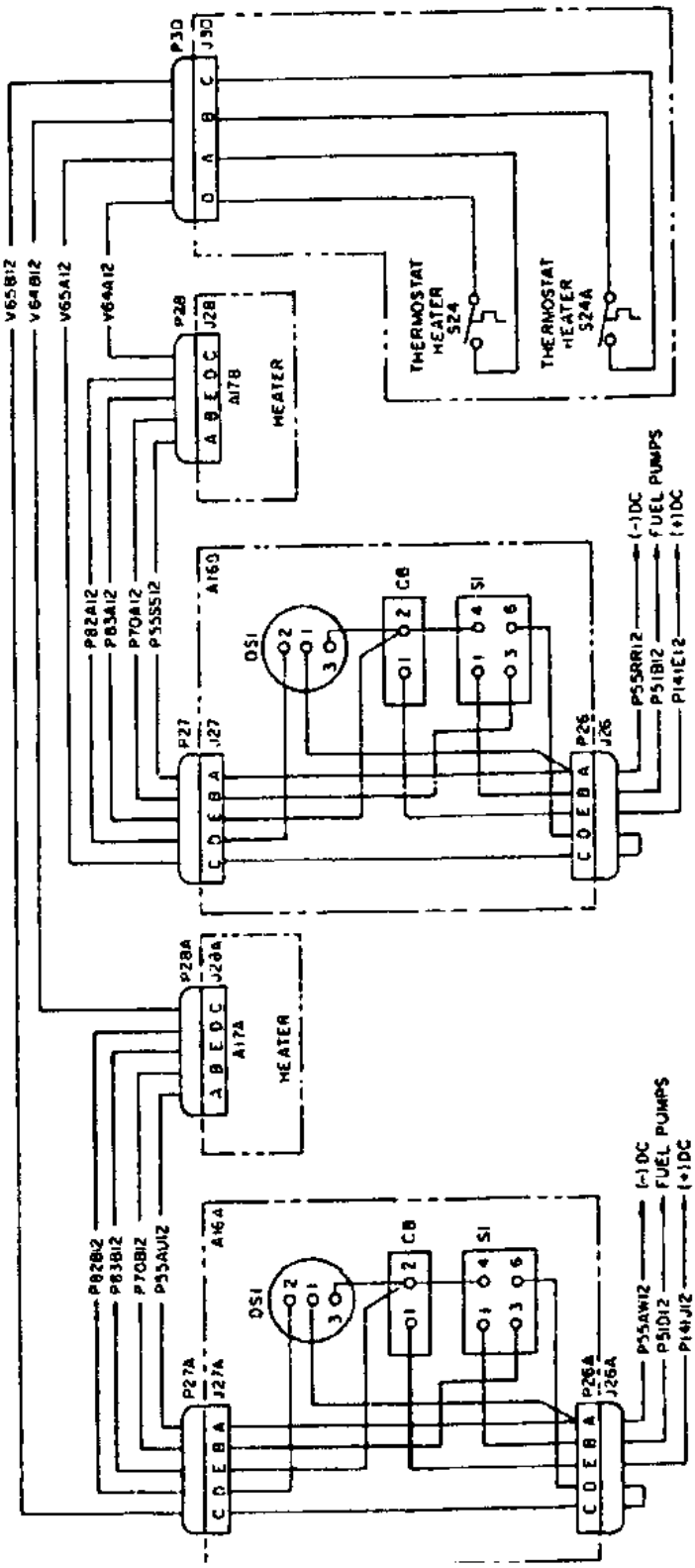

FIGURE B-30. <u>Example of a wiring diagram</u> - Continued.

FROM	SHD GRP	WIRE ID	TO		SHD GRP	ROUTE CODE
A17(Cont)						
J2-A		381	A17	J1-A		
J2-B		382	A17	J1-B		
J2-C		383	A17	J1-C		
J2-D		384	A17	J1-D		
S1	FS	385	A39	FT		
S1-1		351	A17	TB1-1		
S1-2		BLK385	A39			
S1-3		353	A17	TB1-3		
S1-4		352	A17	TB1-2		
S1-5		RED385	A39			
S1-6		354	A17	TB1-4		
S2-1		368	A17	S3-1		
S2-1		376	A17	TB2-1		
S2-2		355	A17	TB1-5		
S3-1		368	A17	S2-1		
S3-1		369	A17	S4-1		
S3-2		356	A17	TB1-6		
S4-1		369	A17	S3-1		
S4-1		370	A17	S5-1		
S4-2		357	A17	TB1-7		
S5-1		370	A17	S4-1		
S5-1		371	A17	S6-1		
S5-2		358	A17	TB1-8		
S6-1		371	A17	S5-1		
S6-1		372	A17	S7-1		
S6-2		359	A17	TB1-9		
S7-1		372	A17	S6-1		
S7-1		373	A17	S8-1		
S7-2		360	A17	TB1-10		
S8-1		373	A17	S7-1		
S8-1		374	A17	S9-4		
S8-2		361	A17	TB2-4		
S9-1		362	A17	TB2-5		
S9-2		363	A17	TB2-6		
S9-3		364	A17	TB2-7		
S9-4		374	A17	S8-1		
S9-4		375	A17	S10-4		
S10-1		365	A17	TB2-8		
S10-2		366	A17	TB2-9		
S10-3		367	A17	TB2-10		
S10-4		375	A17	S9-4		
TB1		386		TB12	A-D	
TB1-1		351	A17	S1-1		
TB1-1		386A		TB12-1	A-D	
TB1-2		352	A17	S1-4		
TB1-2		386B		TB12-2	A-D	
TB1-3		353	A17	S1-3		
TB1-3		386C		TB12-3	A-D	
TB1-4		354	A17	S1-6		
TB1-4		386D		TB12-4	A-D	
TB1-5		355	A17	S2-2		
TB1-5		386E		TB12-5	A-D	
TB1-6		356	A17	S3-2		
TB1-6		386F		TB12-6	A-D	
TB1-7		357	A17	S4-2		
TB1-7		386G		TB12-7	A-D	
TB1-8		358	A17	S5-2		

FROM	SHD GRP	WIRE ID	TO		SHD GRP	ROUTE CODE
A17(Cont)						
TB1-8		386H		TB12-8		A-D
TB1-9		359	A17	S7-2		
TB1-9		386J		TB12-9		A-D
TB1-10		360	A17	S7-2		
TB1-10		386K		TB12-10		A-D
TB2		387		TB13		A-D
TB2-1		376	A17	S2-1		
TB2-1		387A		TB13-2		A-D
TB2-2		388	A20	1		
TB2-2		387B		TB13-4		A-D
TB2-3		389	A20	2		
TB2-3		387C		TB13-6		A-D
TB2-4		361	A17	S8-2		
TB2-4		387D		TB12-11		A-D
TB2-5		362	A17	S9-1		
TB2-5		387E		TB12-12		A-D
TB2-6		363	A17	S9-2		
TB2-6		387F		TB12-13		A-D
TB2-7		364	A17	S9-3		
TB2-7		387G		TB12-14		A-D
TB2-8		365	A17	S10-1		
TB2-8		387H		TB13-12		A-D
TB2-9		366	A17	S10-2		
TB2-9		387J		TB13-13		A-D
TB2-10		367	A17	S10-3		
TB2-10		387K		TB13-14		A-D
A18						
E1		705	A18	STP	FU	
STP	FU	705	A18	E1		
J1-A		416		P10-A		
J1-A		420	A18	J2-A		
J1-B		417		P10-B		
J1-B		421	A18	J2-B		
J1-C		418		P10-C		
J1-C		422	A18	J2-C		
J1-D		419		P10-D		
J1-D		423	A18	J2-D		
J2-A		420	A18	J1-A		
J2-B		421	A18	J1-B		
J2-C		422	A18	J1-C		
J2-D		423	A18	J1-D		
S1	FU	424	A40		FV	
S1-1		390	A18	TB1-1		
S1-2		BLK424	A40			
S1-3		392	A18	TB1-3		
S1-4		391	A18	TB1-2		
S1-5		RED424	A40			
S1-6		393	A18	TB1-4		
S2-1		407	A18	S3-1		
S2-1		415	A18	TB2-1		
S2-2		394	A18	TB1-5		
S3-1		407	A18	S2-1		
S3-1		408	A18	S4-1		
S3-2		395	A18	TB1-6		
S4-1		408	A18	S3-1		
S4-1		409	A18	S5-1		
S4-2		396	A18	TB1-7		

FIGURE B-31. <u>Example of a wire list.</u>

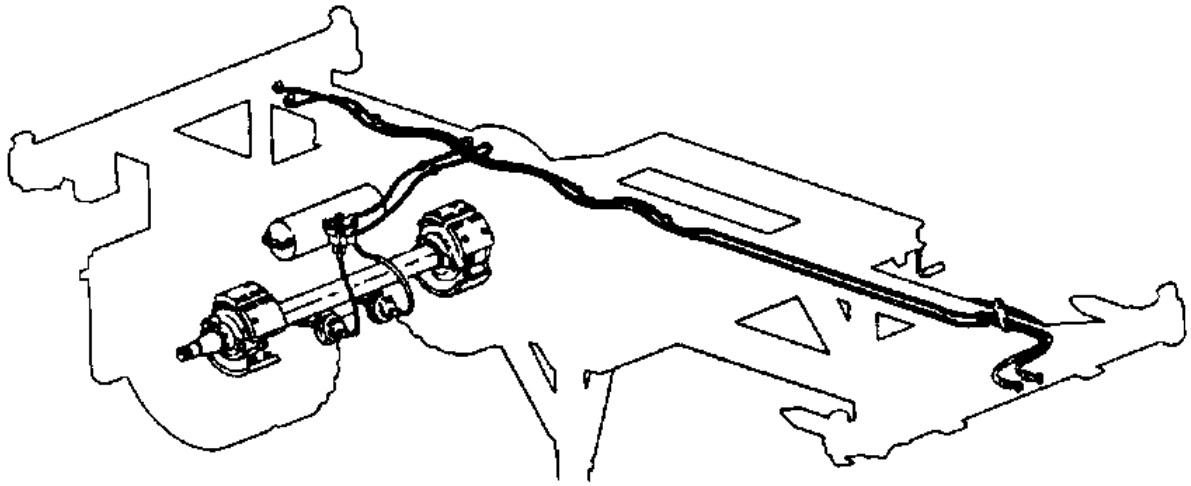

FIGURE B-32. Example of a piping diagram.

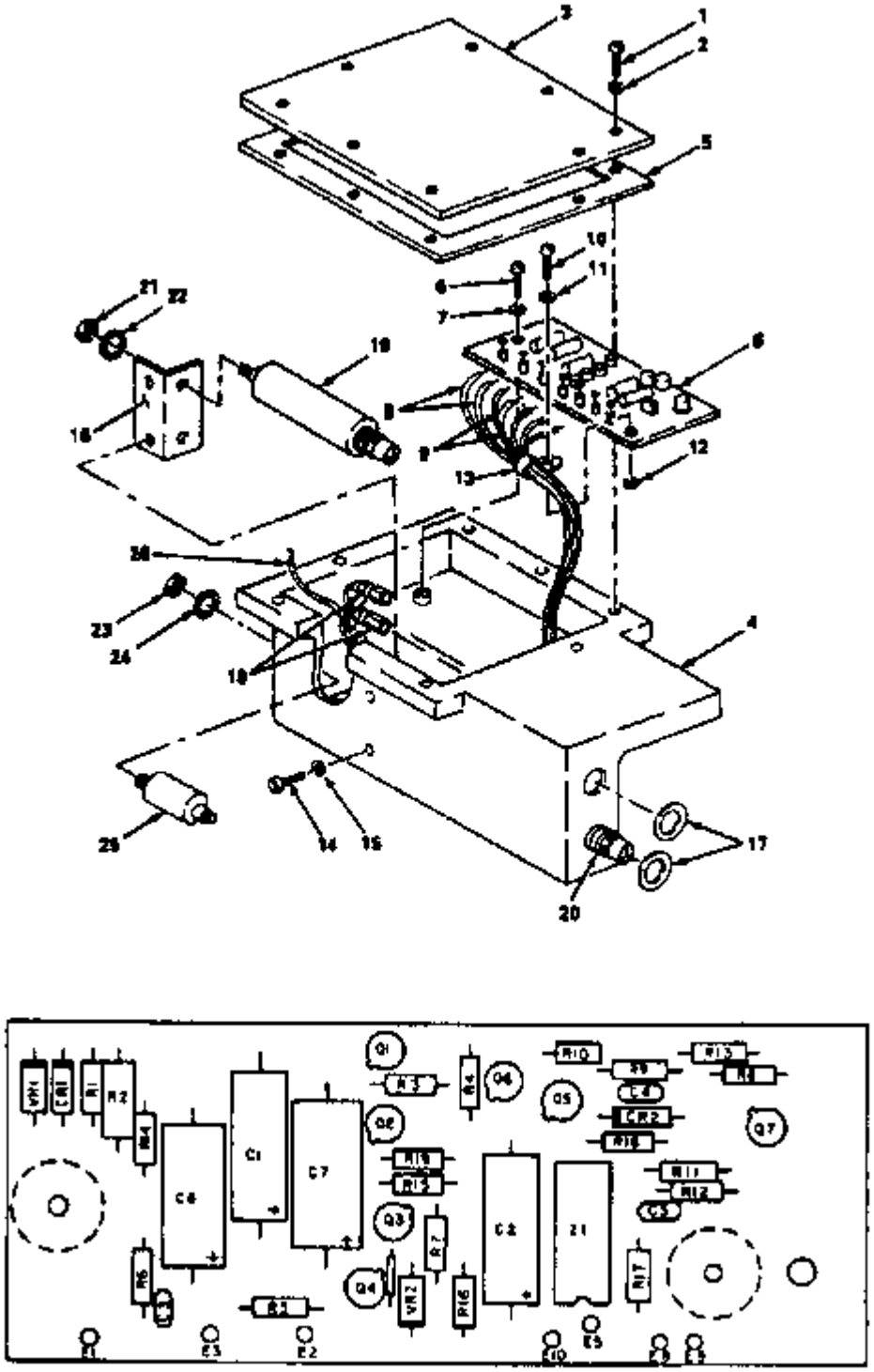

FIGURE B-33. <u>Example of an electronic component card illustration.</u>

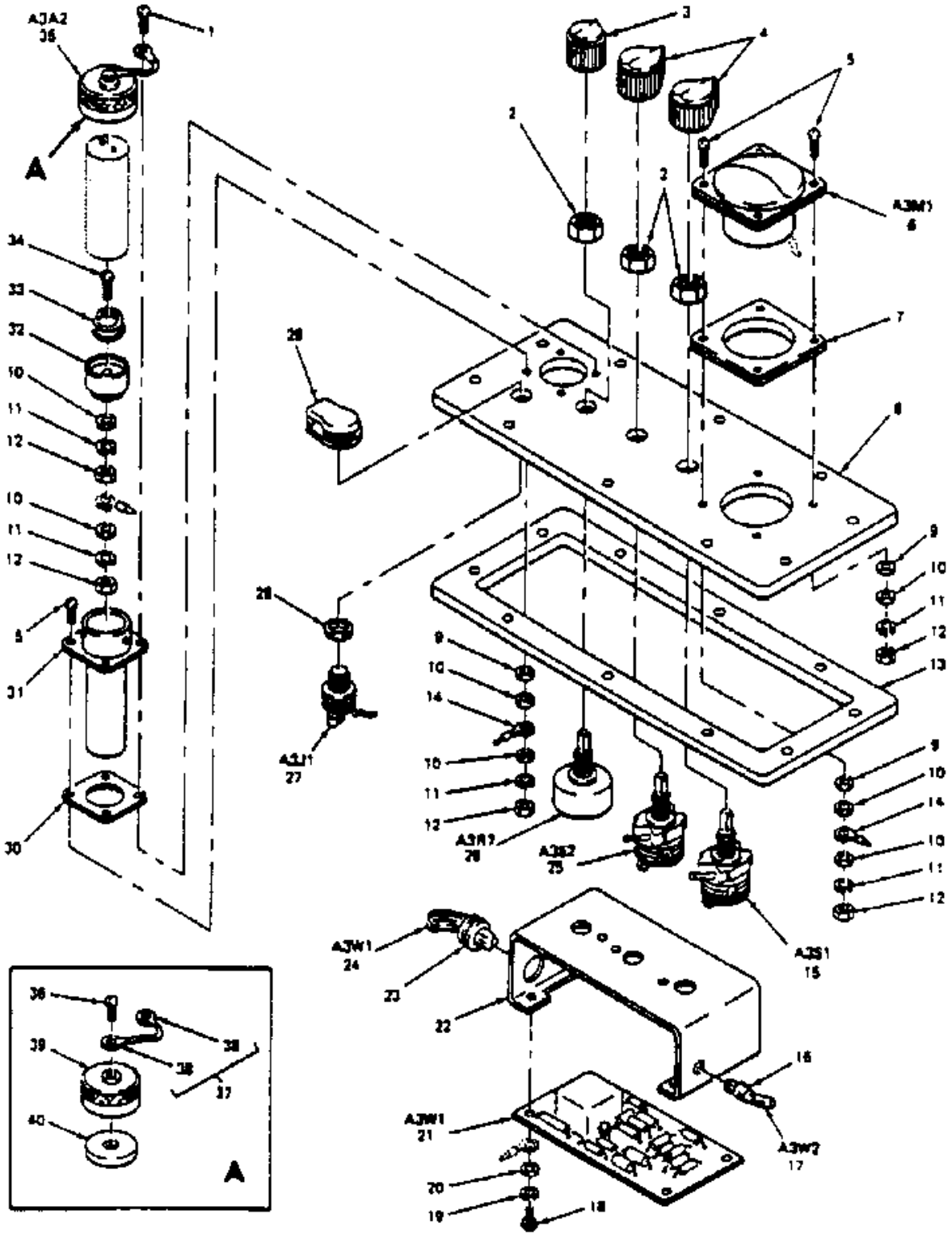

FIGURE B-34. <u>Example of an electronic equipment RPSTL illustration.</u>

APPENDIX C

GUIDANCE FOR PREPARATION OF A LIST OF EFFECTIVE PAGES

C.1 **SCOPE.**

C.1.1 Scope. This appendix provides guidance for the preparation of a list of effective pages. A list of effective pages should be prepared for all new and revised manuals. The list of effective pages should be updated with each change. A list of effective pages is only applicable to paper or ETM publications, except pocketbook TMs. The list of effective pages is not applicable to IETMs. The information contained herein is intended for guidance only.

C.2 **APPLICABLE DOCUMENTS.**

This section is not applicable to this appendix.

C.3 **DEFINITIONS.**

The definitions in section 3 of this handbook apply to this appendix.

C.4 **GENERAL REQUIREMENTS.**

This section is not applicable to this appendix.

C.5 **DETAILED REQUIREMENTS.**

C.5.1 Types of publications. The following types of publications should have a list of effective pages:

a. Technical Manuals (TMs).

b. Depot Maintenance Work Requirements (DMWRs).

c. Technical Bulletins (TBs).

d. Supply Bulletins (SBs).

e. RPSTLs.

f. Preventive Maintenance Services (PMS) Manuals.

g. Preventive Maintenance Inspections (PMI) Manuals.

h. Commercial Off-the-Shelf (COTS) Manuals (Part of Supplemental Data).

i. BDAR Manuals.

j. Aircraft Maintenance Test Flight (MTF) Manuals.

k. Aircraft Operator Manuals.

l. Aircraft Troubleshooting Manuals.

m. National Maintenance Work Requirement (NMWRs).

C.5.1.1 Exempted publications. The following types of publications are exempt from a list of effective pages:

a. Modification Work Orders (MWOs).

b. Supply Catalogs (SCs).

c. Preventive Maintenance Checklists (PMCs).

d. Aircraft Operator Checklists.

e. Hand receipt Manuals (-HRs).

f. Pocketbook TMs.

g. TMs less than 8 pages.

h. IETMs.

C.5.2 Types of pages to be included. The following types of pages should be included in a list of effective pages:

a. All front matter pages to include cover, warning summary, table of contents, and how- to-use this manual info.

b. All WPs/pages containing tasks/instructions and related information.

c. Glossary pages.

d. Index pages.

e. Foldout pages.

C.5.2.1 Exempted pages. The following types of pages should NOT be included in a list of effective pages:

a. DA Forms 2028.

b. Authentication page.

c. Back cover.

C.5.3 Change numbers. For new publications, the change number is always 0; so the list of effective pages would have all zeros. See Figure C-1 for a sample of a new publication list of effective pages. When a change is done, the appropriate change number is put in the change number column. See Figure C-2 for a sample of a change publication list of effective pages. When a publication is revised, the change numbers are all changed back to zero. See Figure C-3 for a sample of a revised publication list of effective pages.

C.5.4 Listing the pages. All pages in the book should be listed except as noted in paragraph C.5.2.1 above. List each work package by number and put the total number of pages in the work package in parentheses next to the WP number. To reduce the size of a list of effective pages, you may group pages together if they are the same change number. The words "deleted", "added", or "blank" may be placed next to the page numbers when applicable. See Figure C-2 for sample usage of these words.

C.5.5 Numbering the list of effective pages. The list of effective pages should have a page number "A" for the first page and "B, C, D, etc." for additional pages.

C.5.6 List of Effective Pages for RPSTLS. A list of effective pages for a RPSTL is prepared similarly to other manuals. For RPSTLs prepared entirely in work package format, you list the work package numbers. See Figure C- 4 for a sample of a list of effective pages for a RPSTL in work package format. If you prepare only the Introduction in work package format and the remainder of the RPSTL is a CCSS dump. List the front matter, the introduction work package with the number of pages in the introduction work package, in parentheses, adjacent to the work package number, and then for the remainder of the pages list the figure numbers and page numbers. The figure number should be listed first. For example, if you have 3 figures, you would list fig 1-1, page 1-1, fig 2-1, page 2-1, fig 3-1, page 3-1, etc. See Figure C-5 for an example of this type of RPSTL list of effective pages.

C.5.7 Multi-service manuals. For multi-service manuals, the abbreviation of the acquiring service (e.g., USA, USN, USMC, or USAF) should be placed in the lower right-hand corner of the page. See Figure C-2 for sample.

C.5.8 Multi-volume manuals. A list of effective pages covering all volumes should be prepared and included in volume 1. List each volume number followed by the pages in that volume. See Figure C-6 for sample of an overall list of effective pages for a multi-volume manual that goes in part 1. Each volume, except volume 1, should include a list of effective pages listing the pages provided in that particular volume.

C.5.9 Dates of Issue for changes. At the top of the list of effective pages, list the date of the basic manual and the dates of each change listed in the change number column.

TM 3-1040-286-12&P

LIST OF EFFECTIVE PAGES/WORK PACKAGES

Date of issue for the original manual is:

Original 13 Jul 98

TOTAL NUMBER OF PAGES FOR FRONT AND REAR MATTER IS 20 AND TOTAL NUMBER OF WORK PACKAGES IS 35, CONSISTING OF THE FOLLOWING:

Page/WP No.	*Change No.	Page/WP No.	*Change No.
Title	0	WP 0016 00 (4 pgs)	0
Warnings	0	WP 0017 00 (2 pgs)	0
i-iii	0	WP 0018 00 (8 pgs)	0
iv blank	0	WP 0019 00 (12 pgs)	0
Chp 1 title page	0	WP 0020 00 (2 pgs)	0
WP 0001 00 (4 pgs)	0	WP 0021 00 (2 pgs)	0
WP 0002 00 (10 pgs)	0	Chp 7 title page	0
WP 0003 00 (2 pgs)	0	WP 0022 00 (2 pgs)	0
WP 0004 00 (2 pgs)	0	WP 0023 00 (4 pgs)	0
Chp 2 title page	0	WP 0024 00 (6 pgs)	0
WP 0005 00 (2 pgs)	0	WP 0025 00 (4 pgs)	0
WP 0006 00 (6 pgs)	0	WP 0026 00 (4 pgs)	0
WP 0007 00 (2 pgs)	0	WP 0027 00 (4 pgs)	0
Chp 3 title page	0	WP 0028 00 (4 pgs)	0
WP 0008 00 (2 pgs)	0	WP 0029 00 (4 pgs)	0
Chp 4 title page	0	WP 0030 00 (4 pgs)	0
WP 0009 00 (12 pgs)	0	WP 0031 00 (6 pgs)	0
Chp 5 title page	0	WP 0032 00 (6 pgs)	0
WP 0010 00 (2 pgs)	0	WP 0033 00 (2 pgs)	0
WP 0011 00 (2 pgs)	0	WP 0034 00 (2 pgs)	0
Chp 6 title page	0	WP 0035 00 (2 pgs)	0
WP 0012 00 (20 pgs)	0	I-1 thru I-14	0
WP 0013 00 (30 pgs)	0		
WP 0014 00 (30 pgs)	0		
WP 0015 00 (2 pgs)	0		

*Zero in this column indicates an original page.

A

FIGURE C-1. Example of a list of effective pages for a new publication.

TM 3-1040-286-12&P

INSERT LATEST CHANGED PAGES/WORK PACKAGES. DESTROY SUPERSEDED DATA.

LIST OF EFFECTIVE PAGES/WORK PACKAGES

NOTE: The portion of text affected by the changes is indicated by a vertical line in the outer margins of the page. Changes to illustrations are indicated by a vertical line adjacent to the title.

Date of issue for the original manual and changed pages/work packages are:

Original	13 Jul 98
Change 1	10 Dec 98
Change 2	2 Mar 99

TOTAL NUMBER OF PAGES FOR FRONT AND REAR MATTER IS 20 AND TOTAL NUMBER OF WORK PACKAGES IS 35, CONSISTING OF THE FOLLOWING:

Page/WP No.	*Change No.	Page/WP No.	*Change No.
Title	1	WP 0016 00 (4 pgs)	0
Warnings	0	WP 0017 00 (2 pgs)	1
i-iii	2	WP 0018 00 (8 pgs)	1
iv Blank	0	WP 0019 00 (12 pgs)	1
Chp 1 title page	0	WP 0020 00 (2 pgs)	2
WP 0001 00 (4 pgs)	1	WP 0021 00 (2 pgs)	0
WP 0002 00 (10 pgs)	1	Chp 7 title page	0
WP 0003 00 (2 pgs)	0	WP 0022 00 (2 pgs)	0
WP 0004 00 (2 pgs)	2	WP 0023 00 (4 pgs)	2
Chp 2 title page	0	WP 0024 00 (6 pgs)	1
WP 0005 00 (2 pgs)	0	WP 0025 00 (4 pgs)	1
WP 0006 00 (6 pgs)	2	WP 0026 00 (4 pgs)	0
WP 0007 00 (2 pgs)	1	WP 0027 00 (4 pgs) Deleted	2
Chp 3 title page	0	WP 0028 00 (4 pgs)	0
WP 0008 00 (2 pgs)	0	WP 0029 00 (4 pgs)	0
Chp 4 title page	0	WP 0030 00 (4 pgs)	1
WP 0009 00 (12 pgs)	0	WP 0031 00 (6 pgs)	2
Chp 5 title page	0	WP 0032 00 (6 pgs)	0
WP 0010 00 (2 pgs)	0	WP 0033 00 (2 pgs)	1
WP 0011 00 (2 pgs)	1	WP 0034 00 (2 pgs)	0
Chp 6 title page	0	WP 0034 01 (4 pgs) Added	2
WP 0012 00 (20 pgs)	2	WP 0035 00 (2 pgs)	2
WP 0013 00 (30 pgs)	0	I-1 thru I-14	0
WP 0014 00 (30 pgs)	2		
WP 0015 00 (2 pgs)	0		

*Zero in this column indicates an original page.

A Change 2 USAF

FIGURE C-2. Example of a list of effective pages for a manual with changes.

TM 3-1040-284-12

LIST OF EFFECTIVE PAGES/WORK PACKAGES

NOTE: This manual supersedes TM 3-1040-284-12 dated 15 Mar 89.

Date of issue for revision is:

Original 16 Sep 98

TOTAL NUMBER OF PAGES FOR FRONT AND REAR MATTER IS 20 AND TOTAL NUMBER OF WORK PACKAGES IS 35, CONSISTING OF THE FOLLOWING:

Page/WP No.	*Change No.	Page/WP No.	*Change No.
Title	0	WP 0016 00 (4 pgs)	0
Warnings	0	WP 0017 00 (2 pgs)	0
i-iii	0	WP 0018 00 (8 pgs)	0
iv blank	0	WP 0019 00 (12 pgs)	0
Chp 1 title page	0	WP 0020 00 (2 pgs)	0
WP 0001 00 (4 pgs)	0	WP 0021 00 (2 pgs)	0
WP 0002 00 (10 pgs)	0	Chp 7 title page	0
WP 0003 00 (2 pgs)	0	WP 0022 00 (2 pgs)	0
WP 0004 00 (2 pgs)	0	WP 0023 00 (4 pgs)	0
Chp 2 title page	0	WP 0024 00 (6 pgs)	0
WP 0005 00 (2 pgs)	0	WP 0025 00 (4 pgs)	0
WP 0006 00 (6 pgs)	0	WP 0026 00 (4 pgs)	0
WP 0007 00 (2 pgs)	0	WP 0027 00 (4 pgs)	0
Chp 3 title page	0	WP 0028 00 (4 pgs)	0
WP 0008 00 (2 pgs)	0	WP 0029 00 (4 pgs)	0
Chp 4 title page	0	WP 0030 00 (4 pgs)	0
WP 0009 00 (12 pgs)	0	WP 0031 00 (6 pgs)	0
Chp 5 title page	0	WP 0032 00 (6 pgs)	0
WP 0010 00 (2 pgs)	0	WP 0033 00 (2 pgs)	0
WP 0011 00 (2 pgs)	0	WP 0034 00 (2 pgs)	0
Chp 6 title page	0	WP 0035 00 (2 pgs)	0
WP 0012 00 (20 pgs)	0	I-1 thru I-14	0
WP 0013 00 (30 pgs)	0		
WP 0014 00 (30 pgs)	0		
WP 0015 00 (2 pgs)	0		

*Zero in this column indicates an original page.

A

FIGURE C-3. Example of a list of effective pages for a revised manual.

TM 5-3805-237-20P

INSERT LATEST CHANGED PAGES/WORK PACKAGES. DESTROY SUPERSEDED DATA

LIST OF EFFECTIVE PAGES/WORK PACKAGES

NOTE: The portion of text affected by the changes is indicated by a vertical line in the outer margins of the page. Changes to illustrations are indicated by vertical lines adjacent to the title. Changes to items in the RPSTL lists are indicated by an asterisk adjacent to the item.

Dates of issue for original and changed pages/work packages are:

Original . .0 . .13 May 92
Change . .1 . .16 Jun 98

TOTAL NUMBER OF PAGES FOR FRONT AND REAR MATTER IS 6 AND TOTAL NUMBER OF WORK PACKAGES IS 23, CONSISTING OF THE FOLLOWING:

Page/WP No.	*Change No.	Page/WP No.	*Change No.
Title	0	WP 0011 00 (4 pgs)	1
i-iv	0	WP 0012 00 (4 pgs)	0
v-vi	1	WP 0013 00 (4 pgs)	0
WP 0001 00 (12 pgs)	1	WP 0014 00 (4 pgs)	1
WP 0002 00 (4 pgs)	0	WP 0015 00 (4 pgs)	0
WP 0003 00 (4 pgs)	0	WP 0016 00 (4 pgs)	0
WP 0004 00 (4 pgs)	1	WP 0017 00 (4 pgs)	0
WP 0005 00 (4 pgs)	0	WP 0018 00 (4 pgs)	0
WP 0006 00 (4 pgs)	0	WP 0019 00 (4 pgs)	1
WP 0007 00 (4 pgs)	1	WP 0020 00 (4 pgs)	0
WP 0008 00 (4 pgs)	0	WP 0021 00 (8 pgs)	1
WP 0009 00 (4 pgs)	1	WP 0022 00 (10 pgs)	1
WP 0010 00 (4 pgs)	0	WP 0023 00 (6 pgs)	0

*Zero in this column indicates an original page or work package.

A Change 1

FIGURE C-4. Example of a list of effective pages for a RPSTL in WP format

TM 5-3805-237-20P

INSERT LATEST CHANGED PAGES/WORK PACKAGES. DESTROY SUPERSEDED DATA.

LIST OF EFFECTIVE PAGES/WORK PACKAGES

NOTE: The portion of text affected by the changes is indicated by a vertical line in the outer margins of the page. Changes to illustrations are indicated by vertical lines adjacent to the title. Changes to items in the RPSTL lists are indicated by an asterisk adjacent to the item.

Dates of issue for original and changed pages/work packages are:

Original . .0 . .13 May 92
Change . .1 . .16 Jun 98

TOTAL NUMBER OF PAGES 152, TOTAL NUMBER OF FIGURES IS 89, AND TOTAL NUMBER OF WORK PACKAGES IS 1, CONSISTING OF THE FOLLOWING:

Page/WP No.	*Change No.	Page/WP No.	*Change No.
Title	0	I-1 thru I-4	0
i-iv	0	I-5 thru I-6	1
v-vi	1	I-7 thru I-10	0
WP 0001 00 (12 pgs)	1	I-11 thru I-12	1
Figure 1 - 5	0	I-13 thru I -14	0
1-1 thru 5-1	0	I-15	1
Figure 6	1	I-16 thru I-33	0
6-1	1	I-34	1
Figure 7 - 24	0	I-35 thru I-45	0
7-1 thru 24-1	0	I-46 thru I-48	1
Figure 25	1	I-49 thru I-56	0
25-1	1		
Figure 26 - 72	0		
26-1 thru 72-1	0		
Figure 73	1		
73-1	1		
Figure 74-88	0		
74-1 thru 88-1	0		
Bulk-1	0		
Figure 89	0		
89-1	0		

*Zero in this column indicates an original page or work package.

A Change 1

FIGURE C-5. <u>Example of a list of effective pages for a RPSTL with a CCSS Dump.</u>

TM 3-1040-284-12

LIST OF EFFECTIVE PAGES/WORK PACKAGES

Date of issue for the original manual is:

Original 24 Apr 90

TOTAL NUMBER OF VOLUMES IS 3, TOTAL NUMBER OF PAGES FOR FRONT AND REAR MATTER IS 21 AND TOTAL NUMBER OF WORK PACKAGES IS 30, CONSISTING OF THE FOLLOWING:

Page/WP No.	*Change No.	Page/WP No.	*Change No.
VOLUME 1			
Title	0	WP 0014 00 (12 pgs)	0
i-iii	0	WP 0015 00 (2 pgs)	0
iv Blank	0	WP 0016 00 (2 pgs)	0
Chp 1 title page	0	Chp 7 title page	0
WP 0001 00 (4 pgs)	0	WP 0017 00 (2 pgs)	0
WP 0002 00 (10 pgs)	0	WP 0018 00 (4 pgs)	0
WP 0003 00 (2 pgs)	0	WP 0019 00 (6 pgs)	0
WP 0004 00 (2 pgs)	0	WP 0020 00 (4 pgs)	0
Chp 2 title page	0	Index-1 thru Index-4	0
WP 0005 00 (2 pgs)	0	**VOLUME 3**	
WP 0006 00 (6 pgs)	0	Title	0
WP 0007 00 (2 pgs)	0	i-ii	0
Chp 3 title page	0	Chp 8 title page	0
WP 0008 00 (2 pgs)	0	WP 0021 00 (4 pgs)	0
WP 0009 00 (2 pgs)	0	WP 0022 00 (4 pgs)	0
WP 0010 00 (2 pgs)	0	WP 0023 00 (4 pgs)	0
Index-1 thru Index-2	0	WP 0024 00 (6 pgs)	0
VOLUME 2		WP 0025 00 (6 pgs)	0
Title	0	WP 0026 00 (2 pgs)	0
i-ii	0	WP 0027 00 (2 pgs)	0
Chp 4 title page	0	WP 0028 00 (10 pgs)	0
WP 0011 00 (2 pgs)	0	WP 0029 00 (8 pgs)	0
WP 0012 00 (2 pgs)	0	WP 0030 00 (16 pgs)	0
WP 0013 00 (8 pgs)	0	Index-1 thru Index-4	0

*Zero in this column indicates an original page.

A

FIGURE C-6. Example of a list of effective pages for a multi-volume manual.

APPENDIX D

SAMPLING PLAN FOR INSPECTION OF TECHNICAL MANUALS AND READING GRADE LEVEL MEASURES

D.1 **SCOPE.**

D.1.1 Scope. This appendix provides a uniform sampling plan, which may be used for surveying for Reading Grade Level (RGL) or comprehensibility for in-process reviews, validation, etc. Sampling is not to be used for conduct of verifications. It also provides useful quantitative measures for three characteristics contributing to comprehensibility of text, namely, number of syllables, words, and sentences. This appendix contains a method for calculating the Reading Grade Level (RGL) for Technical manuals (TMs) or portions thereof. Calculating RGL may be performed using computer technology, whenever possible.

D.2 **APPLICABLE DOCUMENTS.**

This section is not applicable to this appendix.

D.3 **DEFINITIONS.**

The definitions in section 3 of this handbook apply to this appendix.

D.4 **GENERAL REQUIREMENTS.**

This section is not applicable to this appendix.

D.5 **DETAILED REQUIREMENTS.**

D.5.1 Sampling plan for inspection. Sampling inspection in quality conformance is an acceptable practice to ascertain conformance to requirements. A sampling plan is appropriate when the number of characteristics to be checked makes 100 percent evaluation excessively time consuming and costly for the TM being inspected. Simple random sampling of pages is not an adequate method as a TM is not a homogeneous mass and different tests require different types and amounts of sample material. The plan presented here uses a mixture of random sampling by type of material and scanning by the reviewer to detect instances of nonconformance.

D.5.1.1 Derivation of samples. Samples to be tested are obtained as a result of the processes of D.5.1.1.1 and D.5.1.1.2.

D.5.1.1.1 Critical scanning. The purpose of critical scanning by the reviewer is to locate instances of suspected nonconformance for specific testing. Each page of the entire TM should be scanned for obvious nonconformance with a requirement of this standard; appropriate tests should then be applied to that material

D.5.1.1.2 Systematic sampling. The purpose of systematic sampling is to provide semi-random samples of different types of material throughout the TM for detailed examination and testing. Different tests require different types and amounts of sample material. In general, the method of deriving samples is to identify a number of equally spaced break pages and to define sample material with reference to these break pages. (Refer to D.5.1.6.)

D.5.1.2 Applicable tests. Sample material is to be examined or tested in detail for conformance with the requirements of this standard. In most instances, the nature of the tests is implicit in the statement of the requirements. This is not the case for RGL requirements (Refer to 4.3 and 4.4). Additional detail is provided in D.5.2.

D.5.1.3 Extended local samples. Under the assumption that the material surrounding an instance of nonconformance has a higher probability of containing more such instances, extended local sampling provides additional sample material for examination. (Refer to D.5.1.7.)

D.5.1.4 Validation of readability. Narrative text is to be validated for conformance to the RGL as specified by the acquiring activity. If the Overall Grade Level (OGL) (including tolerance) is exceeded, the TM needs to be rewritten as required to meet the specified RGL. If a sample Grade Level (GL) is exceeded, the entire text surrounding each sample is to be rewritten as required.

D.5.1.5 Critical scanning. Each page of the TM should be scanned by the reviewer. Grounds for suspected nonconformance include, but are not limited to, the criteria of D.5.1.5.1 through D.5.1.5.3.

D.5.1.5.1 Scanning criteria for procedures. Scanning criteria for procedures are as follows.

a. Procedural step does not begin with a verb.

b. Procedural step is in negative form (i.e., do not ...).

c. Procedural steps are prefaced by an unnecessary lead-in, which merely duplicates the title.

d. Procedure is not prefaced by relevant introductory information (i.e., initial setup) such as personnel required, special tools, test equipment, etc.

D.5.1.5.2 Scanning criteria for nonprocedural text. Scanning criteria for nonprocedural text are as follows:

a. Sentence(s) seem excessively long.

b. There is no topic sentence.

c. There are procedures in nonprocedural text.

D.5.1.5.3 Scanning criteria for illustrations and tables. Scanning criteria for illustrations and tables are as follows:

a. Portions of image area appear cluttered in the following circumstances:

(1) Too many symbols on a functional or schematic diagram.

(2) Too many line intersections on a functional, wiring, or piping diagram.

(3) Too many lines on a graph.

b. Print seems too small.

c. Callouts are hard to distinguish; arrangement or placement of callouts appears unacceptable.

d. Inputs are not at the left or top or outputs are not at the right or bottom on a functional or schematic diagram.

e. Signal flow does not read from left to right or feedback/return flow from right to left on a functional or schematic diagram.

f. Signal flow direction is not indicated by arrows on a functional or schematic diagram.

g. Locator view is required.

h. Table appears crowded – no aids for staying in correct row or column.

i. Illustration/table is not located close to the text where referenced.

j. Referenced table has no title.

k. Exploded view has no axis lines.

D.5.1.6 Systematic sampling.

D.5.1.6.1 Identifying break pages. Break pages are pages that are equally spaced throughout the TM beginning with a randomly selected page. They are used as reference points to develop different types of samples as described in subsequent paragraphs.

a. Count the number of pages of text or illustrations (or whatever is being sampled) in the TM. The count should include all full and partial pages that contain the item to be sampled. Record the number of pages.

b. The basic number of samples is determined by the following:

		Basic No. of Samples		
No. of Pages	Divided by "N"	Min	Max	
90 and above	10	9	30	
54 to 89	9		6	9
32 to 53	8		4	6
1 to 31	6	2	4	

.

c. Divide the number of pages by the appropriate divisor, "N." Round off the quotient to the next lowest whole number. For example, quotients of 17.3 and 17.7 are both rounded off to 17. This quotient will equal the basic number of samples to be analyzed.

d. For TMs of less than 12 pages, randomly select two samples and mark them for analysis.

e. For TMs of 12 pages or more, randomly select a number between one and "N." The number selected is to be marked as the first page to be analyzed. Starting at the selected page, mark every "Nth" page to the end of the TM. The marked pages should identify approximate starting points for the basic samples to be analyzed.

f. Check marked pages to verify that at least one sample has been selected for each information module of the TM. If any information module has been missed, randomly select one page from that information module and add it to the basic samples to be analyzed. Ensure that the portion sampled represents the type of text (or whatever) that makes up the majority of the information module (i.e., a procedure versus descriptive text).

D.5.1.6.2 Samples of procedural text. Beginning with each break page, the first complete procedure and subsequent complete procedures as needed are to be selected until the total number of procedural steps exceeds 20. For suspected nonconformance identified by critical scanning, the above sampling process is to be applied beginning with the suspected procedure.

D.5.1.6.3 Samples of nonprocedural text.

D.5.1.6.3.1 Calculation of RGL. Beginning with each break page, at least two hundred words should be sampled. For suspected nonconformance identified by critical scanning, material is selected as above, but begins with the suspected paragraph.

D.5.1.6.3.2 Other tests on nonprocedural text. Six-page samples beginning with each break page should be selected. For each instance of suspected nonconformance identified by critical scanning, a six-page sample surrounding each suspected instance should be selected.

D.5.1.6.4 Samples of illustrations and tables. A sample of each different type of illustration and a sample of each table needs to be obtained.

D.5.1.6.4.1 Sampling method for illustrations. Beginning with each break page, the first example encountered of each illustration type is to be selected (ignoring those already selected when text was sampled), no matter where in the TM it occurs. The intent of this procedure is to generate a sample for each illustration type no larger than the number of break pages and to sample each illustration type adequately, whether they are spread out through the TM or are clustered together.

D.5.1.6.4.2 Tables. A sample of tables is to be selected by the same method.

D.5.1.7 Extended local samples.

D.5.1.7.1 Procedural text. Material in the vicinity of a confirmed instance of nonconformance is to be checked for similar nonconformance, using the two procedures immediately before the nonconforming procedure and the two procedures immediately following. If three or more of the five procedures are nonconforming, the entire information module may be suspected of nonconformance and measures to correct it implemented.

D.5.1.7.2 Nonprocedural text.

D.5.1.7.2.1 Samples for RGL calculation. If nonconformance is found, RGL should be calculated from the three pages before and three pages following the nonconforming material using the method of Appendix D. If two or more of the three samples are nonconforming, the entire information module may be suspected of nonconformance and measures to correct it implemented.

D.5.1.7.2.2 Other tests on nonprocedural text. If nonconformance is found, material in the two six-page samples immediately adjacent to the nonconforming sample should also be tested for conformance. If two or more of the three samples are nonconforming, the entire information module may be suspected of nonconformance and measures to correct it implemented.

D.5.1.7.3 Illustrations and tables. Material in the vicinity of a confirmed instance of nonconformance is to be checked for similar nonconformance, using two examples of the same illustration type or table immediately before the nonconforming one and two examples immediately following it. All illustrations and tables in the information module should be rescanned for potential nonconformance of all kinds.

D.5.1.8 Special cases of sampling.

D.5.1.8.1 Short TMs. If there are fewer than six pages between break pages, use as samples all material between break pages instead of six-page samples previously specified.

D.5.1.8.2 Material already sampled . For any particular test, if the material has already been sampled, the test results already obtained should be used.

D.5.1.8.3 Availability of material. If the amount of material called for does not exist, all available material is to be used.

D.5.2 Reading grade level measures.

D.5.2.1 Counts for narrative text. For each sample, marked, raw data should be collected. Data collection should consist of counts of the numbers of words, sentences, and syllables in each sample. The size of the sample is based on the number of words to be analyzed. Samples should start at the beginning of the first full paragraph on each marked sample page. If a sample falls on a page containing procedural instructions, start the sample at the beginning of the first full sentence on the page.

D.5.2.1.1 Words. Word count all words up to the end of the sentence containing the 200th word. If the marked sample page is less than 200 words, the sample can be extended to the next page of text; but do not extend the sample into a new information module or text pertaining to a completely new subject. Record the number of words in each sample.

D.5.2.1.2 Sentences. Count all sentences in the sample including the sentence that contains the 200th word. Record the number of sentences in each sample.

D.5.2.1.3 Syllables. Count syllables the way the word is normally pronounced aloud. Count all numbers as one syllable. For example, 5.1, 65, and 300 each count as one syllable. However, if a numeric expression contains several numbers separated by hyphens, count each number as a syllable. For example, the expression 9-1025-240-10 is counted as four syllables. Acronyms and abbreviations are counted as one syllable unless they actually spell out a word of more than one syllable. For example, Hz and DVM each count as one syllable, but TRADOC and ATCOM each count as two syllables. Record the number of syllables in each sample.

D.5.2.2 Automatic counting equipment. Devices for obtaining keystroke, word, and sentence counts automatically as text is input may be used. Keystroke counts should then be substituted for syllable counts.

D.5.2.3 Calculation of RGL. Automated equipment and software may be used to calculate RGL provided the computation meets the requirements of this document.

D.5.2.3.1 Overall grade level. The Overall Grade Level (OGL) of a TM is calculated as follows:

a. Add the total number of words (W) from all samples combined. Record total.

b. Add the total number of sentences (S) from all samples combined. Record total.

c. Add the total number of syllables (P) from all samples combined. Record total.

d. Calculate the average sentence length (A). Divide the total number of words (W) by total number of sentences (S): (A = W/S). Round off quotient to the nearest one hundredth. Record quotient.

e. Calculate the average number of syllables per word (B). Divide total number of syllables (P) by total number of words (W): (B = P/W). Round off quotient to the nearest one hundredth. Record quotient.

f. Calculate the OGL of the TM by the following formula. Round off the OGL to the nearest integer.

OGL = 0.39(A) + 11.8(B) - 15.59

SAMPLE COMPUTATIONS TO DEMONSTRATE USE OF FORMULAS

Sample	Total No. Words	Total No. Sentences	Total No. Syllables
1	250	30	500
2	220	35	475
3	245	28	420
4	223	22	400
5	256	32	510
6	215	27	398
7	219	26	395
8	230	30	400
9	225	29	380
10	226	28	370
10	W=2309	S=287	P=4248

A = W/S	A = 2309/287	A = 8.05
B = P/W	B = 4248/2309	B = 1.84

OGL = 0.39(A) + 11.8(B) - 15.59

OGL = 0.39(8.05) + 11.8(1.84) - 15.59

OGL = 3.14 + 21.71 - 15.59

OGL = 9

D.5.2.3.2 Sample grade levels. Calculate the Grade Level (GL) of each sample as follows:

a. Calculate the average sentence length (L). Divide the number of words (V) in the sample by the number of sentences (T) in the sample: (L = V/T). Round off quotient to the nearest one hundredth.

b. Calculate the average number of syllables per word (D). Divide the number of syllables (C) in the sample by the number of words (V) in the sample: (D = C/V). Round off quotient to the nearest one hundredth.

c. Calculate the GL of each sample by the following formula. Round off each GL to the nearest integer.

GL = 0.39(L) + 11.8(D) - 15.59

SAMPLE COMPUTATIONS TO DEMONSTRATE USE OF FORMULAS

Sample	Total No. Words	Total No. Sentences	Total No. Syllables
1	V1=250	T1=30	C1=500
2	V2=250	T2=35	C2=475

L1 = V1/T1	L2 = V2/T2	
D1 = C1/V1	D2 = C2/V2	
L2 = V2/T2	L2 = 220/35	L2=6.29
D2 = C2/V2	D2=475/220	D2 = 2.16

GL1 = 0.39(L1) + 11.8(D1) - 15.59
GL1 = 0.39(8.33) + 11.8(2) - 15.59
GL1 = 3.25 + 23.6 - 15.59
GL1 = 11

GL2 = 0.39(L2) + 11.8(D2) - 15.59
GL2 = 0.39(6.29) + 11.8(2.16) - 15.59
GL2 = 2.45 + 25.49 - 15.59
GL2 = 12

D.5.2.4 Manual counting technique. Obtaining accurate word and syllable counts rapidly can be aided by using a push-button operated counting device while reciting the text aloud. Certain hand-held electronic calculators can be used in this way.

INDEX

	Paragraph	Page
–A–		
Abbreviations	4.17.1	46
Abbreviations	5.11.1	62
Acronyms	4.17.1	46
Acronyms	5.11.1	62
Additional work packages for a change	7.1.1.3	69
Advertising	4.13	22
Advertising	4.13.3	22
Advertising	5.5.3	51
Alerts, use of	5.10.2	58
Alignment of equations	4.17.2.4	49
Applicability	1.2	1
Applicable document	B.2	225
Applicable Documents	2.	1
Applicable documents	A.2	211
Applicable documents	C.2	309
Applicable documents	D.2	325
Applicable tests	D.5.1.2	326
Appropriate detail in diagrams	B.5.16.3	237
Arms Export Control Notice	A.5.1.5	213
Arrowheads	B.4.1.7	227
Automatic counting equipment	D.5.2.2	331
Automatic electronic test and checkout terminology	4.5.5	20
Automatic electronic test and checkout terminology	5.11.9.4	66
Availability of material	D.5.1.8.3	330
–B–		
Block technique	9.2a	236
Boat connector	9.2a	236
Border rules and boxes	B.4.1.1	225
Breakoff symbols	9.2c	235
–C–		
Cable diagrams	B.5.16.12.1	240
Calculation of RGL	D.5.1.6.3.1	328
Callouts	B.4.1.4	226
Capitalization	TABLE III	42
Cartoons	B.5.15	232
Cautions		
Display requirements for	5.10.3.1.1	60
Grouping of	5.10.3.1	59
Use and placement of	5.10.3.1	59
Cautions	4.16.7	37
Cautions	4.16.7.1	37
Change numbers	C.5.3	311
Changed front and rear matter pages	7.1.1.4	69
Changed work packages	7.1.1.2	68
Changes		
Additional WP	7.1.1.3	69
For page-based manuals	7.1	68
Format	7.1.1.1	68
Front matter pages	7.1.1.4	69
Rear matter pages	7.1.1.4	69
Symbols	7.1.1.5	69
Work packages	7.1.1.2	68
Changes for page-based manuals	7.1	68
Changes/Revisions	7.	68

INDEX

	Paragraph	Page
Changes	7.1.1	68
Chapter		
Illustrations	8.8	72
Overall	8.2	71
Pages	8.6	72
Paragraphs and tables	8.7	72
Table of contents	8.3	71
Work packages	8.5	72
Chapter, classification	8.4	71
Chapter	8.4	71
Charts and graphs	B.5.16.15	242
Classified publications, reprinting of	8.10	74
Color in frame-based/IETMs	B.4.1.9.2	228
Color in page-based TMs	B.4.1.9.1	228
Color	B.4.1.9.2	228
Combination illustrations	B.5.17.1	242
Combination illustrations	B.5.17.1.4	243
Complete revisions	7.1.2	69
Comprehensssibility	4.2	19
Connecting words	4.17.2.5	49
Consistency and applicability, nomenclature	4.5.1	19
Consistency of diagrams	B.5.16.3	237
Content frame		
Face - information not contained on	A.5.1.7	214
Mailer	A.5.2	214
Set number	A.5.1.2	212
Content frame, CD	5.9.1.2	54
Content frame	5.9.1.2	54
Contents, list of	5.9.1.5	54
Copyright		
Credit line	5.5.1	51
Copyright notice	A.5.1.5	213
Copyright/copyright credit line	4.13.1	22
Copyright	5.5.1	51
Copyright	5.5.2	51
Copyrights	4.13.2	22
Counts for narrative text	D.5.2.1	330
Creating an outline for a TM	4.15.2	28
Credit lines	B.4.1.3	226
Critical scanning	D.5.1.1.1	326
Critical scanning	D.5.1.5	326
Cutaway diagrams	B.5.16.5	238

–D–

Date		
Of issue, list of effective pages	C.5.9	312
Declassification procedures	8.9.3	73
Declassification	8.9	73
Definition list	4.16.5.6a	36
Definitions	A.3	211
Definitions	B.3	225
Definitions	C.3	309
Definitions	D.3	325
Derivation of samples	D.5.1.1	326
Description and theory of operation	4.14.4	24
Descriptive information	5.10.4.3	60
Designations, diagrams	B.5.16.1.1	233
Destruction notice	9.2b	215
Detail and size, illustrations	6.1.2	67
Detail requirements	D.5	325

INDEX

	Paragraph	Page
Detail views	B.5.13	232
Detailed Requirements	A.5	211
Detailed requirements	B.5.1	229
Detailed requirements	C.5	309
Development of an XML source file	4.15.3	30
Development of an XML source file	5.7	52
Development of icons	4.16.8.2	39
Development of individual work package	5.9.9	58
Development of individual work packages	4.15.1.1	27
Development of work package TMs	4.14	22
Diagrams		
Appropriate detail	9.2c	234
Cable	B.5.16.12.1	240
Consistency	B.5.16.3	237
Cutaway	B.5.16.5	238
Electronic items	B.5.16.14	241
Functional	B.5.16.3	237
General methods	B.5.16.1.2	233
Inappropriate data	B.5.16.2	234
Interconnection data	B.5.16.12	239
Layout	9.2a	234
Logic	B.5.16.6	238
Partial	B.5.16.8	239
Pictorial	B.5.16.4	238
Piping	B.5.16.13	241
Portraying signal flow	B.5.16.2	234
Power distribution	B.5.16.10	239
Pyramid	9.2c	236
Referencing items on	5.11.7.13	65
Schematic	B.5.16.3.1	237
Signal connections	B.5.16.2.1	235
Simplified	B.5.16.7	239
Specification requirements for	B.5.16.1	233
Techniques between sheets of	B.5.16.2.1.2	236
Techniques between	B.5.16.2.1.3	236
Techniques within a single sheet	B.5.16.2.1.1	235
Test	B.5.16.9	239
Wire list	B.5.16.12.3	241
Wiring data	9.2a	241
Wiring	B.5.16.12.2	240
Diagrams	B.5.16	233
Digitized artwork	B.5.17.1.1	242
Digitized artwork	B.5.17.1.3	243
Format	50	
Display of IETMs	5.3	50
Display of illustrations	5.10.9	62
Display of text	5.10.8	62
Display requirements for warnings, cautions, and notes	5.10.3.1.1	59
Displaying the TM using a style sheet	5.8	52
Displaying the TM using	5.8	52
Distribution restriction - FOUO	9.2e	213
Distribution restriction B	9.2a	213
Distribution restriction C	9.2b	213
Distribution restriction E	9.2d	213
Distribution restriction	9.2a	214
Distribution restriction	A.5.1.5	213
Distribution restrictions	A.5.1.5	213
Dividing an equation	4.17.2.3	48
Document instance		
Electronic items	B.5.16.14	241

INDEX

	Paragraph	Page
Electrostatic discharge sensitive marking	5.11.4	63
EM number	A.5.1.3	212
Emergency markings	5.11.6	63
Engineering drawings	B.5.7	230
Equations	4.17.2	47
Equations	5.11.8	66
Printing the TM using XSL stylesheets	4.15.3.2.2	31
Downgrading procedures	8.9.2	73
Downgrading/declassification notice	8.9.1	73
Downgrading	8.9.2	73

–E–

EM number	A.5.1.3	212
Equations		
Alignment of	4.17.2.4	49
Connecting words	4.17.2.5	49
Dividing	4.17.2.3	48
Numbering and referencing to	4.17.2.7	50
Punctuation	4.17.2.2	48
Spacing	4.17.2.6	49
Symbols	4.17.2.1	47
Equations	4.17.2	47
Equipment panel markings, referencing	5.11.7.6	64
Equipment, components, and parts, referencing	5.11.7.4	64
ESD acronym, in figures	6.1.2.5	67
Exempted pages	C.5.2.1	310
Exempted publications	C.5.1.1	310
Exploded views	B.5.11	231
Extended local samples	D.5.1.3	326
Extended local samples	D.5.1.7	329

–F–

Figure number and title placement	4.16.6.2	36
Figure numbering	4.16.6.1	36
Figure titles	4.16.6.4	37
Figures contained in this handbook	4.12	22
Figures, ESD acronym in	6.1.2.5	67
Figures, referencing	5.11.7.11	65
Figures/illustrations	4.16.6	36
Final reproducible copy, requirements for	B.5.17	242
Flyleaf	A.5.2.1	214
Flyleafs	A.5.3	215
Foldout illustrations	B.5.10	231
Foldout page sizes	TABLE II	39
Font size and style	5.10.1	58
Fonts		
PDF not preferred	4.16.10a	40
PDF preferred	4.16.10a	40
Style and size	TABLE III	42
True Type	4.16.10a	40
Tables	62	
Footnotes to tables	4.16.5.5	35
For Official Use Only - Distribution restriction	9.2e	213
Form and content of procedures	4.8.2	21
Format		
Caution	4.16.7.1	37
Changes	7.1.1.1	68
Hazardous materials warnings with icons	4.16.8.1	38
IETM	5.10	58

INDEX

	Paragraph	Page
Lists	5.10.7.6	62
Major divisions	4.16.1	31
Note	4.16.7	37
Paragraph titles	5.10.5.2	61
Paragraphs	4.16.3	32
Procedural step levels	4.16.4.1	33
Procedural steps titles	4.16.4	32
Procedural steps	4.16.4	32
Procedural steps	5.10.6	61
Tables	5.10.7.4	61
Tables Numbering	4.16.5.2	34
Tables titles	4.16.5.3	34
Tables	4.16.5.4	34
Warning	4.16.7	37
Work packages	4.16.2	31
Format for warnings, cautions, and notes	4.16.7.1	37
Format, printed page-based	4.10	21
Format	4.16	31
Formatting requirements, text	4.16.11.1	45
Frame-based		
Development of work package	5.6	51
Useful, parts data	5.9.6.1.1	56
Frame-based technical manual development	5.	50
Frame-based TMs, color in	B.4.1.9.2	228
Front and rear matter, changed	7.1.1.4	69
Front matter	4.14.3	23
Front matter	4.14.3.1	23
Functional diagrams	B.5.16.3	237

–G–

General information for symbols	5.11.2.1	63
General information	4.14.4	24
General methods for diagrams	B.5.16.1.2	233
General Requirements	A.4	211
General requirements	B.4	225
General requirements	C.4	309
General requirements	D.4	325
General	2.1	1
General	4.1	18
General	5.1	50
Government documents	2.2	1
Government specifications and standards, referencing	5.11.7.2	64
Grammar, standard English	4.6	20
Graphics		
Classification markings	8.	70
Detail and size	6.1.2.1	67
Detail	6.1.2.1	67
Display of illustrations	5.10.9	62
ESD acronym in	6.1.2.5	67
Figure titles	4.16.6.4	37
Illustration presentation	6.1.2	67
Illustrations, placement of	4.16.11	45
Illustrations/figures	4.16.6	36
Legends	4.16.6.5	37
Letter size	6.1.2.4	67
Multiple tasks	4.16.11.5	46
Numbering RPSTL figures	4.16.6.3	36
Numbering	4.16.6.1	36
Placement in pocket manuals	4.16.11.2.1	45
Placement of figure number and title	4.16.6.2	36

INDEX

	Paragraph	Page
Placement of text and related illustrations	4.16.11.2	45
Placement options	4.16.11.4	46
Referencing	5.11.7.11	65
Repeating illustrations	4.16.11.6	46
Requirements for	B.4.1	225
Requirements for	TABLE IV	233
Revision symbols for	7.3.1	70
Sampling methods for	D.5.1.6.4.1	329
Scale	6.1.2.2	67
Scanning criteria for	D.5.1.5.3	327
Size options	6.1.2.3	67
Style and format	6.1.1	67
Text wrapping	4.16.11.3	46
Types of	B.5.1	229
Types used in WP TMs	B.5.1	229
Types	6.2	67
Graphics requirements	6.	66
Grouping		
Warnings, cautions, and notes	5.10.3.1	59
Guidelines for preparation of CD-ROM face, flyleaf, jewel case and mailers	Appendix A	211

–H–

Handbooks	2.2.1	1
Hardness-Critical process marking	5.11.3	63
Hazardous material warnings	5.10.3.2	60
Hazardous materials warnings with icons	4.16.8	38
Hazardous materials warnings, format of	4.16.8.1	38
Hazardous materials warnings	4.16.8	38
Highway method	9.2b	235
How to develop a work package TM	4.15	26
How to develop work packages	4.15.1	27
How to use this IETM information	5.9.1f	53
Human figure, use of	B.4.1.2	226

–I–

Icons		
Development of	4.16.8.2	39
Hazardous materials warning with	4.16.8	38
Icons, hazardous materials warnings with	4.16.8	38
Identification information frame	5.9.1.4	54
Identification numbers, work package	4.15.3.1	31
Identification numbers	B.4.1.10	228
Identifying break pages	D.5.1.6.1	327
IDN	A.5.1.3	212
IETM		
Abbreviations	5.11.1	62
Acronyms	5.11.1	62
CD content frame	5.9.1.2	54
CD face data	A.5.1	211
CD face, flyleaf, jewel case, and mailer	Appendix A	211
CD mailer	A.5.2	214
Color in	B.4.1.9.2	228
Description and theory of operation	5.9.2	54
Descriptive information	5.10.4.3	60
Development of individual work package	5.9.9	58
Development of work package	5.6	51
Display of illustrations	5.10.9	62
Display of text	5.10.8	62
Display requirements for warnings, cautions, and notes	5.10.3.1.1	59

INDEX

	Paragraph	Page
Division of	5.9	53
Flyleafs	A.5.3	215
Font size and style	5.10.1	58
Format	5.10	58
How to use this	5.9.1f	53
Identification information	5.10.4	60
Identification information frame	5.9.1.4	54
Initial outline development	5.6.1.1	51
Initial setup information for work packages	5.10.4.1	60
Installation data	5.9.1.1	53
Introductory matter	5.9.1	53
List of contents	5.9.1.5	54
Maintenance instructions	5.9.5	55
Maintenance tasks	5.10.4.3	60
Multimedia presentation	5.11.10	66
Operator instructions	5.9.3	54
Outline, content and arrangement	5.6.1.2	52
Parts information	5.9.6	56
Parts information in work package	5.9.6.1	56
Photographs in	B.5.6.2	230
Planning information	5.9.1	53
Referencing within the	5.11.7.3	64
Referencing	5.11.7	64
Referencing	5.11.7.9	65
Revision summary frame	5.9.1.3	54
Revisions for	7.2	69
Style and format for display	5.3	50
Style	5.11	62
Stylesheet displaying a TM using	5.8	52
Supporting information	5.9.6	57
Symbols	5.11.2	62
Title bar	5.10.10	62
Title bar	5.10.4	60
Title frame	5.9.1.4	54
Troubleshooting procedures	5.9.4	55
Uninstall data	5.9.1.1	53
Use of alerts	5.10.2	58
Useful, parts data	5.9.6.1.1	56
Warnings, cautions, and notes, use and placement of	5.10.3.1	59
Work package content	5.9.8	57
WP Identification number	5.10.4.2	60
IETM division		
Description and theory of operation	5.9.2	54
Maintenance instructions	5.9.5	55
Operator instructions	5.9.3	54
Parts information	5.9.6	56
Supporting information	5.9.6	57
Troubleshooting procedures	5.9.4	55
IETM division	5.9	53
IETM	5.	50
Illustration detail and size	6.1.2.2	67
Illustration detail	6.1.2.1	67
Illustration placement options	4.16.11.4	46
Illustration style and format	6.1.1	66
Illustrations		
Classification markings	8.	71
Display of	5.10.9	62
For procedures	B.5.2	229
Multisheet RPSTL	B.5.10.1	231
Placement of	4.16.11	45

INDEX

	Paragraph	Page
Samples of	D.5.1.6.4.2	329
Sampling methods for	D.5.1.6.4.1	329
Scanning criteria for	D.5.1.5.3	327
Illustrations (See Graphics)	4.16.6	36
Illustrations	D.5.1.7.3	330
Index numbers, referencing	5.11.7.12	65
Index numbers	B.4.1.4.1	226
Individual work packages, development of	4.15.1.1	27
Information not contained on CD face	A.5.1.7	213
Initial outline development	5.6.1.1	51
Initial setup information for work packages	5.10.4.1	60
Inside of mailer (left)	A.5.2.4	214
Inside of mailer (right)	A.5.2.5	215
Installation data, IETMs	5.9.1.1	53
Installation instructions and operating environment	9.2c	215
Intended use	9.1	74
Interconnection data	B.5.16.12	239
Interrupted flow method	9.2c	235
Items on diagrams, referencing	5.11.7.13	65

–K–

Keyword listing	9.2	74

–L–

Layout, diagrams	B.5.16.3	237
Leader lines	B.4.1.7	227
Lead-in	4.8.1	20
Leading	TABLE III	42
Legends	4.16.6.5	37
Legends	B.4.1.8	227
Letter size	6.1.2.4	67
Limitations for nonprocedural text	4.7c	20
Limitations for procedural text	4.8.3	21
Line drawings	B.5.17.1.1	242
Line drawings	B.5.17.1.2	243
Line drawings	B.5.5	230
Line graphs	B.5.16.15.1	242
List of contents	5.9.1.5	54
List of effective pages		
Change numbers	C.5.3	311
Dates of issue for changes	C.5.9	312
Exempted pages	C.5.2.1	310
Exempted publications	C.5.1.1	310
Listing the pages	C.5.4	311
Multi-service manuals	C.5.7	311
Multi-volume manuals	C.5.8	311
Numbering	C.5.5	311
RPSTLs	C.5.6	311
Types of pages to be included	C.5.2	310
Types of publications	C.5.1	309
Listing the pages	C.5.4	311
Lists		
Definition	4.16.5.6a	36
Defintion	5.10.7.6a	62
Format	5.10.7.6	62
Random	5.10.7.6b	62
Random	4.16.5.6b	36
Sequential	5.10.7.6c	62
Sequential	4.16.5.6c	36

INDEX

	Paragraph	Page
Lists	4.16.5	34
Lists	4.16.5.6	36
Locator views	B.5.12	232
Logic diagrams	B.5.16.6	238

–M–

Maintenance instructions	4.14.7	24
Maintenance tasks	5.10.4.3	60
Major divisions		
Format	4.16.1	31
Manual counting technique	D.5.2.4	333
Mapping elements, SGML to XML	4.11	21
Markings		
Classification, illustrations	8.8	72
Emergency	5.11.6	63
ESD	5.11.4	63
Nuclear hardness	5.11.3	63
Protective	5.11.6	63
Protective	A.5.1.6	213
Security classification	5.11.6	63
Table classification	8.7	72
Material already sampled	D.5.1.8.2	330
Metric and U.S. standard measurements, referencing	5.11.7.7	65
Metric symbols	5.11.2.2	63
Military terms	4.5.4	20
Military terms	5.11.9.3	66
Multimedia presentation	5.11.10	66
Multiple tasks using same illustration	4.16.11.5	46
Multisection illustrations	B.5.8	230
Multi-service manuals	C.5.7	311
Multisheet illustrations	B.5.10	231
Multisheet RPSTL illustrations	B.5.10.1	231
Multiview illustrations	B.5.9	231
Multi-volume manuals	C.5.8	311

–N–

Narrative, non procedural text	4.7	20
Neutral terms	4.5.3	19
Nomenclature		
Automatic electronic test and checkout terms	4.5.5	20
Automatic electronic test and checkout terms	5.11.9.4	66
Consistency and applicability	4.5.1	19
Consistency and applicability	5.11.9.1	66
In graphics	B.4.1.6	227
Military terms	4.5.4	20
Military terms	5.11.9.3	66
Official/approved	4.5.2	19
Official/approved	5.11.9.2	66
Nomenclature	4.5	19
Nomenclature	5.11.9	66
Non-Government publications	2.3	3
Nonprocedural text, limitations of	4.7c	20
Nonprocedural text, other tests on	D.5.1.6.3.2	329
Nonprocedural text, other tests	D.5.1.7.2.2	329
Nonprocedural text, samples of	D.5.1.6.3	328
Nonprocedural text, scanning criteria for	D.5.1.5.2	327
Nonprocedural text	D.5.1.7.2	329
Notes		
Display requirements for	5.10.3.1.1	60

INDEX

	Paragraph	Page
Grouping of	5.10.3.1	59
Use and placement of	5.10.3.1	59
Notes	4.16.7	37
Notes	9.1	74
NSNs, referencing	5.11.7.5	64
Nuclear hardness marking	5.11.3	63
Numbering		
And referencing to equations	4.17.2.7	50
Equations	4.17.2.7	50
Figures	4.16.6.1	36
List of effective pages	C.5.5	311
Paragraphs	4.16.3	32
Paragraphs	5.10.5.1	61
Procedural steps	5.10.6.1	61
RPSTL figures	4.16.6.3	36
Tables	5.10.7.2	61
WP Identification	5.10.4.2	60
Numbers		
Change, for list of effective pages	C.5.3	311
Figures, placement of	4.16.6.2	36
Illustration identification	B.4.1.10	228
WP Identification	4.15.3.1	31
WP Identification	5.10.4.2	60

–O–

Obtaining the DTDs	4.11	21
Obtaining the DTDs and style sheets	4.11	21
Official/approved nomenclature	4.5.2	19
Official/approved nomenclature	5.11.9.2	66
Operator instructions	4.14.5	24
Order of precedence	2.4	5
Other documents, referencing	5.11.7.1	64
Other Government documents and publications	2.2.2	2
Other TMs/IETMs, referencing	5.11.7.9	65
Outline, content and arrangement	5.6.1.2	52
Outline, initial, development of	5.6.1.1	51
Outline, TM	4.15.2	28
Outside of mailer (spine)	A.5.2.3	214
Outside panel of mailer (back)	A.5.2.2	214
Outside panel of mailer (face)	A.5.2.1	214
Oval connector	9.2a	235
Oval connectors	9.2a(3)	235
Overall classification	8.2	71
Overall grade level	D.5.2.3.1	331

–P–

Page sizes		
Foldout	TABLE II	39
TM	TABLE I	39
Page sizes	4.16.9	39
Page-based		
Format for printed	4.10	21
Front and rear matter	4.14.3	23
Page-Based Technical Manual Development	4.	18
Page-based technical manuals		
Types of	4.1	18
Page-based TMs, color in	B.4.1.9.1	228
Page-based TMs, photographs used in	B.5.6.1	230
Pages, classification of	8.6	72

INDEX

	Paragraph	Page
Paragraph numbering	5.10.5.1	61
Paragraph titles	5.10.5.2	61
Paragraphs		
Format	4.16.3	32
Numbering	4.16.3	32
Paragraphs, classification markings	8.7	72
Paragraphs	5.10.5	61
Part numbers, referencing	5.11.7.5	64
Partial diagrams	B.5.16.8	239
Parts		
Useful data in IETM	5.9.6.1.1	56
Parts information		
In work packages	5.9.6.1	56
NSNs, referencing	5.11.7.5	64
Part numbers, referencing	5.11.7.5	64
Parts information	5.9.6	56
PDF		
Not preferred fonts	4.16.10a	40
Preferred fonts	4.16.10a	40
Philosophy	A.1.2	211
Photographs, in frame-based manuals/IETMs	B.5.6.2	230
Photographs, in page-based manuals	B.5.6.1	230
Photographs	B.5.6.2	230
Pictorial diagrams	B.5.16.4	238
PIN	A.5.1.3	212
Piping diagrams	B.5.16.13	241
Placement of figure number and title	4.16.6.2	36
Placement of text and illustrations	4.16.11	45
Placement of text and related illustrations for pocket manuals	4.16.11.2.1	45
Placement of text and related illustrations	4.16.11.2	45
Planning information for IETMs	5.9.1	53
Pocket manuals		
Placement of text and related illustrations	4.16.11.2.1	46
Point-to-point method	9.2a	235
Portraying signal flow	B.5.16.2	234
Positive form	4.8.5	21
Power distribution diagrams	B.5.16.10	239
Prescreened photographs	B.5.17.1	242
Prescreened photographs	B.5.17.1.2	243
Presentation, illustration	6.1.2	67
Presentation, multimedia	5.11.10	66
Printing the TM using a style sheet	4.15.3.2.1	31
Printing the TM using XSL stylesheets or style sheets	4.15.3.2.2	31
Procedural step levels	4.16.4.1	33
Procedural step numbering	5.10.6.1	61
Procedural step titles	5.10.6.2	61
Procedural steps	4.16.4	32
Procedural steps	5.10.6	61
Procedural text, limitations of	4.8.3	21
Procedural text, samples of	D.5.1.6.2	328
Procedural text	4.8	20
Procedural text	D.5.1.7.1	329
Procedures		
Form and content of	4.8.2	21
Illustrations for	B.5.2	229
Scanning criteria for	D.5.1.5.1	326
Sentences in	4.8.4	21
Proprietary names	4.13	22
Proprietary names	4.13.2	22
Proprietary names	5.5.2	51

INDEX

	Paragraph	Page
Protective markings	5.11.6	63
Protective markings	A.5.1.6	213
Punctuation		
Equations	4.17.2.2	48
Punctuation	4.17.2.2	48
Pyramid diagram	9.2c	236
Pyramid diagrams	B.5.16.11	239

–Q–

Quality assurance symbol	5.11.5	63

–R–

Random list	4.16.5.6b	36
Readability, validation of	D.5.1.4	326
Reading grade level		
Calculation guidance	D.5.1.6.3.1	328
Calculation of	D.5.1.6.3.1	328
Calculation of	D.5.2.3	331
Measurements	4.4	19
Measures	D.5.2	330
Reading grade level	4.3	19
Rear matter	4.14.3	23
Rear matter	4.14.3.2	23
Referencing		
Equations	4.17.2.7	50
Equipment panel markings	5.11.7.6	64
Equipment, components, and parts	5.11.7.4	64
Figures	5.11.7.11	65
Government specifications and standards	5.11.7.2	64
Index numbers	5.11.7.12	65
Items on diagrams	5.11.7.13	65
Metric and U.S. standard measurements	5.11.7.7	65
NSNs	5.11.7.5	64
Other documents	5.11.7.1	64
Other TMs/IETMs	5.11.7.9	65
Part numbers	5.11.7.5	64
Tables	5.11.7.10	65
Temperature	5.11.7.8	65
Within the IETM	5.11.7.3	64
Referencing	5.11.7	64
Repair parts and special tools list	4.14.7	25
Repeating illustrations	4.16.11.6	46
Reprinting classified publications	8.10	74
Revision symbols for illustrations	7.3.1	70
Revisions		
Complete	7.1.2	69
For frame-based TMs	7.2	69
For page-based manuals	7.1	68
Summary frame	5.9.1.3	54
Supersedure notice	7.1.2.1	69
Symbols	7.3	70
Revisions	7.	68
RPSTLs		
Figure numbering	4.16.6.3	36
Figures	B.4.1.5	227
List of effective pages for	C.5.6	311
Multisheet illustrations	B.5.10.1	231
Rrestrictive handling markings	8.	70

INDEX

	Paragraph	Page
–S–		
Sample grade levels	D.5.2.3.2	332
Samples		
Derivation of	D.5.1.1	326
Extended local	D.5.1.3	326
For reading grade level calculation	D.5.1.7.2.1	329
Illustrations	D.5.1.6.4	329
Nonprocedural text	D.5.1.6.3	328
Procedural text	D.5.1.6.2	328
Tables	D.5.1.6.4	329
Sampling methods for illustrations	D.5.1.6.4.1	329
Sampling plan for inspection	D.5.1	325
Sampling, special cases	D.5.1.8	330
Sampling, systematic	D.5.1.1.2	326
Scale	6.1.2.2	67
Scanned images	B.5.14	232
Scanning criteria for illustrations and tables	D.5.1.5.3	327
Scanning criteria for nonprocedural text	D.5.1.5.2	327
Scanning criteria for procedures	D.5.1.5.1	326
Schematic diagrams	B.5.16.3.1	237
Scope	1.	1
Scope	1.1	1
Scope	A.1.1	211
Scope	A.1.2	211
Scope	B.1.1	225
Scope	C.1.1	309
Scope	D.1.1	325
Security classification markings	5.11.6	63
Selective application and tailoring	4.9	21
Selective application and tailoring	5.2	50
Sentences in procedures	4.8.4	21
Sentences	D.5.2.1.2	330
Sequential list	4.16.5.6c	36
Short TMs	D.5.1.8.1	330
Signal connections	B.5.16.2.1	235
Signal difference	B.5.16.2.2	236
Signal junctions	B.5.16.2.3	237
Signal returns	9.2b	235
Simplified diagrams	B.5.16.7	239
Source file, development of	4.15.3	30
Source file, development of	5.7	52
Spacing	4.17.2.6	49
Spacing	TABLE III	42
Special tools and test equipment, illustrations for	B.5.4	229
Specifications requirements for diagrams	B.5.16.1	233
Specifications	2.2.1	1
Standard English grammar	4.6	20
Standards	2.2.1	1
Style and format, display of frame-based	5.3	50
Style and format, illustrations	6.1.1	66
Style and format, printed page-based	4.10	21
Style sheets		
Obtaining	4.11	21
Style	4.17	46
Style	TABLE III	42
Stylesheet		
Displaying a TM using	5.8	52
Printing a TM using	4.15.3.2.1	31
Stylesheets		
Printing the TM using	4.15.3.2.2	31

INDEX

	Paragraph	Page
Subject term listing	9.2	74
Supersedure notice	7.1.2.1	69
Supersession data	A.5.1.4	212
Supporting information	4.14.9	26
Syllables	D.5.2.1.3	330
Symbols		
Change	7.1.1.5	69
Equations	4.17.2.1	47
General information for	5.11.2.1	63
Metric	5.11.2.2	63
Quality assurance	5.11.5	63
Revision	7.3	70
Revisions, for illustrations	7.3.1	70
Test point identification	B.5.16.3.3	237
Symbols	4.17.2.1	47
Symbols	5.11.2	62
Systematic sampling	D.5.1.1.2	326

–T–

Table of contents, classification of	8.3	71
Tables		
Classification markings	8.7	72
Footnotes to	4.16.5.5	35
Format	4.16.5.4	34
Format	5.10.7.4	61
Location	4.16.5.1	34
Location	5.10.7.1	61
Numbering	4.16.5.2	34
Numbering	5.10.7.2	61
Readability and use	4.16.5.4.1	35
Referencing	5.11.7.10	65
Rotation	4.16.5.1	34
Samples of	D.5.1.6.4	329
Scanning criteria for	D.5.1.5.3	327
Titles	4.16.5.3	34
Titles	5.10.7.3	61
Tables and lists	4.16.5	34
Tables	D.5.1.6.4.2	329
Tables	D.5.1.7.3	330
Tailoring	4.9	21
Tailoring	5.2	50
Target audience description	4.3	19
Technical manual development		
Page-based	4.	18
Technical manual development - Frame-based	5.	50
Techniques between diagrams	B.5.16.2.1.3	236
Techniques between sheets of a diagram	B.5.16.2.1.2	236
Techniques within a single sheet of a diagram	B.5.16.2.1.1	235
Temperature, referencing	5.11.7.8	65
Test diagrams	B.5.16.9	239
Test equipment, illustrations for	B.5.3	229
Test equipment, special, illustrations for	B.5.4	229
Test point identification symbols	B.5.16.3.3	237
Text		
Display of	5.10.8	62
Formatting requirements	4.16.11.1	45
Limitations for nonprocedural text	4.7c	20
Limitations for procedural text	4.8.3	21
Narrative, non procedural	4.7	20
Nonprocedural, samples of	D.5.1.6.3	328

INDEX

	Paragraph	Page
Nonprocedural, scanning criteria for	D.5.1.5.2	327
Nonprocedural	D.5.1.7.2	329
Placement of in pocket manuals	4.16.11.2.1	46
Placement of related illustrations	4.16.11.2	45
Placement of	4.16.11.2	45
Positive form	4.8.5	21
Procedural, samples of	D.5.1.6.2	328
Procedural	4.8	20
Procedural	D.5.1.7.1	329
Sentences in procedures	4.8.4	21
Style, capitalization, leading, and spacing	TABLE III	42
Theory of operation	4.14.4	24
Title bar	5.10.10	62
Title frame	5.9.1.4	54
Titles		
Additional WP for	7.1.1.3	69
CD	A.5.2	214
Figures, placement of	4.16.6.2	36
Figures	4.16.6.4	37
Inside left panel	A.5.2.4	214
Inside right panel	A.5.2.5	215
Outside back	A.5.2.2	214
Outside face	A.5.2.1	214
Outside spine	A.5.2.3	214
Paragraphs	5.10.5.2	61
Procedural steps	4.16.4	32
Tables	4.16.5.3	34
Tables	5.10.7.3	61
TM number	A.5.1.1	212
TM outline	4.15.2	28
TM page sizes	TABLE I	39
TMs developed in accordance with MIL-STD-40051	4.14.2	23
Tool and test equipment, illustrations for	B.5.3	229
Topical sentence	4.7b	20
Troubleshooting procedures	4.14.6	24
Type sizes and styles	4.16.10	39
Types of pages to be included	C.5.2	310
Types of publications	C.5.1	309
Types of work packages	4.14.1	22

–U–

Uninstall data, IETMs	5.9.1.1	53
Uninstall instructions	9.2c	215
Use and placement of warnings, cautions, and notes	5.10.3.1	59
Use of alerts	5.10.2	58

–V–

Validation of readability	D.5.1.4	326

–W–

Warnings		
Cautions, and notes, format for	4.16.7.1	37
Display requirements for	5.10.3.1.1	60
For Hazardous materials, format of	4.16.8.1	38
Grouping of	5.10.3.1	59
Hazardous material	5.10.3.2	60
Use and placement of	5.10.3.1	59
With icons, hazardous materials	4.16.8	38
Warnings	4.16.7	37

INDEX

	Paragraph	Page
Warnings	4.16.7.1	37
Wire list	B.5.16.12.3	241
Wiring data	9.2a	241
Wiring diagrams	B.5.16.12.2	240
Within the IETM, referencing	5.11.7.3	64
Word order	4.7a	20
Words	D.5.2.1.1	330
Work package		
Additional for changes	7.1.1.3	69
Changed	7.1.1.2	68
Classification of	8.5	72
Content of	5.9.8	57
Content	5.9.8	57
Development of individual	5.9.9	58
Development of	5.6	51
How to develop	4.15.1	27
Identification number	5.10.4.2	60
Identification numbers	4.15.3.1	31
Individual, development of	4.15.1.1	27
Information oriented	4.14.1.1	22
Initial setup information	5.10.4.1	60
Parts information in	5.9.6.1	56
Task oriented	4.14.1.2	23
TMs, development of	4.14	22
TMs, How to develop	4.15	26
Types of	4.14.1	22
Work package TMs, development of	4.14	22
Work package TMs, How to develop	4.15	26
Work packages		
Format	4.16.2	31
Wrapping	4.16.11.3	46

–X–

XML source file		
Development of	4.15.3	30
Familiar with tags	4.15.3	30
Final delivarable	4.15.3	30
XSL		
Displaying the TM using	5.8	52
XSL stylesheets		
Printing the TM using	4.15.3.2.2	31

CONCLUDING MATERIAL

Custodian:
Army - TM

Review Activities:
Army - AC1, AR, AT, AV, CR, EA, MI, PT

Preparing Activity:
Army - TM

Project Number:
TMSS A384

STANDARDIZATION DOCUMENT IMPROVEMENT PROPOSAL

INSTRUCTIONS

1. The preparing activity must complete blocks 1,2,3, and 8. In block 1, both the document number and revision letter should be given.
2. The submitter of this form must complete blocks 4,5,6, and 7.
3. The preparing activity must provide a reply within 30 days from receipt of this form.

NOTE: This form may not be used to request copies of documents, nor to request waivers, or clarification of requirements on current contracts. Comments submitted on this form do not constitute or imply authorization to waive any portion of the referenced document(s) or to amend contractual requirements.

I RECOMMEND A CHANGE	**1.DOCUMENT NUMBER** MIL-HDBK-1222B(TM)	**2.DOCUMENT DATE *(YYYYMMDD)*** 20030131

3.DOCUMENT TITLE
Guide to the General Style and Format of U.S. Army Work Package Technical Manuals

4.NATURE OF CHANGE *(Identify paragraph number and include proposed rewrite, if possible. Attach extra sheets as needed.)*

5.REASON FOR RECOMMENDATION

6.SUBMITTER

a.NAME *(Last, First, Middle Initial)*	b.ORGANIZATION	
c.ADDRESS *(Include Zip Code)*	d.TELEPHONE (Include Area Code) (1)Commercial (2)AUTOVON (If applicable)	7.DATE SUBMITTED *(YYMMDD)*

8.PREPARING ACTIVITY

a.NAME USAMC Logistics Support Activity	b.TELEPHONE *(Include Area Code)* (1)Commercial (256) 955-0852 (2)AUTOVON 645-0852
c.ADDRESS *(Include Zip Code)* ATTN: AMXLS-AP Redstone Arsenal, AL 35898-7466	IF YOU DO NOT RECEIVE A REPLY WITHIN 45 DAYS, CONTACT: Defense Standardization Program Office 8725 John J. Kingman Road, Suite 2533 Fort Belvoir, Virginia 22060-6221 Telephone (703) 767-6888 DSN 427-6888